50TCQ
Single Packaged Heat Pump
6 to 12.5 Nominal Tons

Carrier

United Technologies
turn to the experts

Product Data

WeatherMaker®

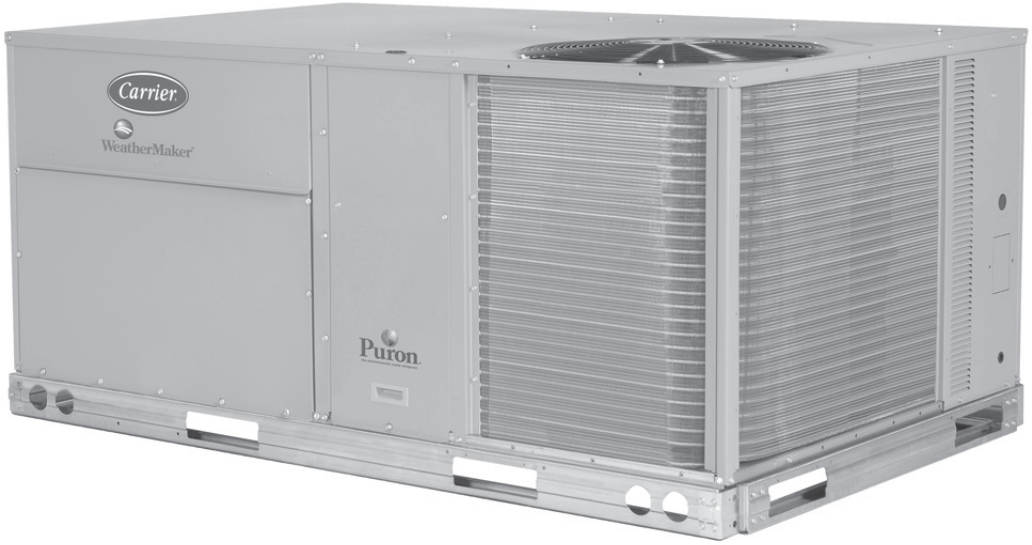

C08613

C UL US

C ETL LISTED US
Intertek

Puron

ASHRAE 90.1 COMPLIANT

AHRI CERTIFIED™
www.ahridirectory.org
Unitary Large AC
AHRI Standard 340/360
Certification applies only when the complete system is listed with AHRI.
C

TABLE OF CONTENTS

	PAGE
FEATURES AND BENEFITS	3
MODEL NUMBER NOMENCLATURE	4
FACTORY OPTIONS AND/OR ACCESSORIES	5
AHRI CAPACITY RATING	8
SOUND PERFORMANCE	9
PHYSICAL DATA	10
ELECTRIC HEAT-ELECTRICAL DATA	12
WEIGHTS AND DIMENSIONS	23
OPTION/ACCESSORY WEIGHTS	38
APPLICATION/SELECTION DATA	39
COOLING CAPACITIES	41
HEATING CAPACITIES	46
STATIC PRESSURE ADDERS	49
ECONOMIZER, BAROMETRIC RELIEF AND PE PERFORMANCE	50
FAN PERFORMANCE	51
ELECTRICAL INFORMATION	58
TYPICAL WIRING DIAGRAMS	76
SEQUENCE OF OPERATION	78
GUIDE SPECIFICATIONS	81

Carrier

United Technologies

turn to the experts

Your Carrier Packaged Heat Pump rooftop unit (RTU) was designed by customers for customers. With no-strip screw collars, handled access panels, and more we've made your unit easy to install, easy to maintain and easy to use.

Easy to install:

All WeatherMaker® units are field-convertible to horizontal air flow which makes it easy to adjust to unexpected job site complications. Lighter units make easy replacement. Carrier 6 to 12.5 ton 50TCQ rooftops fit on existing Carrier curbs dating back to 1989. Also, our large control box gives you room to work and room to mount Carrier accessory controls.

Easy to maintain:

Easy access handles by Carrier provide quick and easy access to all normally serviced components. Our "no-strip" screw system has superior holding power and guides screws into position while preventing the screw from stripping the unit's metal.

Easy to use:

The central terminal board puts all your connections and troubleshooting points in one convenient place, standard. Most low voltage connections are made to the same board and make it easy to find what you're looking for and easy to access it. Carrier rooftops have high and low pressure switches, a filter drier, and 2-in. (51 mm) filters standard.

FEATURES AND BENEFITS

- EER up to 11.2.
- IEER up to 12.5 with single speed indoor fan motor and up to 12.7 with 2-speed/VFD indoor fan motor.
- 6 - 12.5 ton units fit on existing Carrier rooftop curbs making the utility connections the same. This saves time and money on replacement jobs.
- Standardized components and layout. Standardized components and controls make service and stocking parts easier.
- Scroll compressors on all units. This makes service, stocking parts, replacement, and trouble-shooting easier.
- Crankcase heater on all models provides added protection in all applications.
- Precision-sized suction line accumulator provides high reliability by preventing liquid from entering the compressor during low ambient conditions and reverse cycle switch over.
- Field convertible from vertical to horizontal airflow configuration on all models. No special kit required on 07-12 models. Supply duct kit required for 14 model only.
- 4-way reversing valve rapidly changes the flow of refrigerant to quickly changeover from cooling to heating and heating to cooling.
- Easy-adjust, belt drive motor available on all sizes. There's no need for field-supplied drives or motors.
- Provisions for bottom or side condensate drain.
- Capable of thru-the-base or thru-the-curb electrical routing.
- Dependable time/temperature defrost logic provides a defrost cycle, if needed, every 30, 60, 90 or 120 minutes and is adjustable.
- Single-point electrical connection.
- Sloped, composite drain pan won't rust and is self draining.
- Standardized controls and control box layout. Standardized components and controls make stocking parts and service easier.
- Clean, large, easy to use control box.
- Standard coils are copper round tube, aluminum plate fin with optional coil coatings and copper fin design.
- Color-coded wiring.
- Large, laminated wiring and power wiring drawings which are affixed to unit make troubleshooting easy.
- Single, central terminal board for test and wiring connections.
- Fast-access, handled, panels for easy access to the blower and blower motor, control box, and compressors.
- "No-strip" screw system guides screws into the panel and captures them tightly without stripping the screw, the panel, or the unit.
- Exclusive, newly-designed indoor refrigerant header for easier maintenance and replacement.
- Mechanical cooling (115°F to 25°F or 46°C to -4°C) on Electro-mechanical (E/M) and Direct Digital Controller (DDC) (PremierLink™ or RTU Open controller).
- 2-in. (51 mm) disposable filters on all units.
- High capacity refrigerant filter drier on each circuit.
- High pressure, loss of charge, and freeze switches provide higher protection for the unit refrigeration system.
- Staged Air Volume (SAV™) fan speed system utilizes a Variable Frequency Drive (VFD) to automatically adjust the indoor fan motor speed between cooling stages. Available on single stage cooling model 07 and 2-stage cooling models 08-14 with electro-mechanical controls or RTU Open controller. Note that SAV is required on all units for installation in the United States as per the Department of Energy (DOE) efficiency standard of 2018.

MODEL NUMBER NOMENCLATURE

Position:	1	2	3	4	5	6	7	8	9	10	11	12	13	14	15	16	17	18
Example:	5	0	T	C	Q	D	0	8	A	0	A	6	–	0	B	2	A	0

Series - WeatherMaker®
50TC - Packaged Rooftop

Q = Heat Pump

Refrig. Systems Options
A = One Stage Cooling Models
D = Two Stage Cooling Models

Cooling Tons
07 - 6 ton
08 - 7.5 ton
09 - 8.5 ton
12 - 10 ton
14 - 12.5 ton

Sensor Options
A = None
B = RA Smoke Detector
C = SA Smoke Detector
D = RA + SA Smoke Detector
E = CO_2
F = RA Smoke Detector and CO_2
G = SA Smoke Detector and CO_2
H = RA + SA Smoke Detector and CO_2
J = Condensate Overflow Switch
K = Condensate Overflow Switch and RA Smoke Detectors
L = Condensate Overflow Switch and RA and SA Smoke Detectors

Indoor Fan Options
1 = Standard Static Option - Belt Drive
2 = Medium Static Option - Belt Drive
3 = High Static Option - Belt Drive
C = High Static Option with High Efficiency Motor- Belt Drive (size 14 only)

Coil Options - Round Tube/Plate Fin Condenser Coil (Outdoor - Indoor - Hail Guard)
A = Al/Cu - Al/Cu
B = Precoat Al/Cu - Al/Cu
C = E-coat Al/Cu - Al/Cu
D = E-coat Al/Cu - E-coat Al/Cu
E = Cu/Cu - Al/Cu
F = Cu/Cu - Cu/Cu
M = Al/Cu -Al/Cu — Louvered Hail Guard
N = Precoat Al/Cu - Al/Cu — Louvered Hail Guard
P = E-coat Al/Cu - Al/Cu — Louvered Hail Guard
Q = E-coat Al/Cu - E-coat Al/Cu — Louvered Hail Guard
R = Cu/Cu - Al/Cu — Louvered Hail Guard
S = Cu/Cu - Cu/Cu — Louvered Hail Guard

Voltage
1 = 575/3/60
5 = 208-230/3/60
6 = 460/3/60

Packaging
0 = Standard
1 = LTL

Electrical Options
A = None
C = Non-Fused Disconnect
D = Thru-The-Base Connections
F = Non-Fused Disconnect and Thru-The-Base Connections
G = 2-Speed Indoor Fan Controller (VFD)
J = 2-Speed Indoor Fan Controller (VFD) and Non-Fused Disconnect
K = 2-Speed Indoor Fan Controller (VFD) and Thru-The-Base Connections
M = 2-Speed Indoor Fan Controller (VFD) with Non-Fused Disconnect and Thru-The-Base Connections

Service Options
0 = None
1 = Unpowered Convenience Outlet
2 = Powered Convenience Outlet
3 = Hinged Access Panels
4 = Hinged Access Panels and Unpowered Convenience Outlet
5 = Hinged Panels and Powered Convenience Outlet

Intake / Exhaust Options
A = None
B = Temperature Economizer w/ Barometric Relief
F = Enthalpy Economizer w/ Barometric Relief
K = 2-Position Damper
U = Temperature Ultra Low Leak Economizer with Barometric Relief
W = Enthalpy Ultra Low Leak Economizer with Barometric Relief

Base Unit Controls
0 = Electro-mechanical Controls can be used with W7212 EconoMi$er® IV (Non-Fault Detection and Diagnostic
1 = PremierLink™ Controller
2 = RTU Open Multi-Protocol Controller
6 = Electro-mechanical w/ 2-speed fan and W7220 Economizer controller Controls. Can be used with W7220 EconoMi$er X (with Fault Detection and Diagnostic)

Design Revision
– = Factory Design Revision

a50–9830

FACTORY OPTIONS AND/OR ACCESSORIES

Table 1 – FACTORY-INSTALLED OPTIONS AND FIELD-INSTALLED ACCESSORIES

CATEGORY	ITEM	FACTORY–INSTALLED OPTION	FIELD–INSTALLED ACCESSORY
Cabinet	Thru–the–base electrical connections	X	X
	Disconnect switch bracket (available 14 size only)		X
	Supply duct cover (available 14 size only)		X
Coil Options	Cu/Cu indoor and/or outdoor coils	X	
	Pre–coated outdoor coils	X	
	Premium, E–coated outdoor coils	X	
Condenser Protection	Condenser coil hail guard (louvered design)	X	X
Controls	Thermostats, temperature sensors, and subbases		X
	PremierLink™ DDC communicating controller [9]	X	X
	RTU Open multi–protocol controller	X	
	Smoke detector (supply and/or return air)	X	
	Horn/Strobe annunciator [7]		X
	Time Guard II compressor delay control circuit		X
	Phase monitor		X
	Condensate overflow switch	X	X
Economizers and Outdoor Air Dampers	EconoMi$er® IV for electro–mechanical controls – Non FDD, (Standard air leak damper models) [5]	X	X
	EconoMi$er 2 for DDC controls, complies with FDD (Standard and Ultra Low Leak air damper models) [6]	X	X
	EconoMi$er X for electro–mechanical controls, complies with FDD (Standard and Ultra Low Leak air damper controls) [5]	X	X
	Motorized 2 position outdoor air damper [9]	X	X
	Manual outdoor air damper (25% and 50%) [9]		X
	Barometric relief [1]	X	X
	Power exhaust		X
Economizer Sensors and IAQ Devices	Single dry bulb temperature sensors [2]	X	X
	Differential dry bulb temperature sensors [2]		X
	Single enthalpy sensors [2]	X	X
	Differential enthalpy sensors [2]		X
	CO_2 sensor (wall, duct, or unit mounted) [2]	X	X
Electric Heat	Electric resistance heaters		X
	Single point kit		X
Indoor Motor and Drive	Multiple motor and belt drive packages	X	
	Staged air volume (SAV™) fan speed system w/VFD controller (for units with electrical mechanical and RTU Open controller only) [8]	X	
	Display kit for SAV system with VFD		X
Low Ambient Control	Motormaster® head pressure controller [3]		X
Power Options	Convenience outlet (powered)	X	
	Convenience outlet (unpowered): 15 amp factory–installed, 20 amp field–installed	X	X
	Non–fused disconnect [4]	X	
Roof Curbs	Roof curb 14–in. (356 mm)		X
	Roof curb 24–in. (610 mm)		X

NOTES:
1. Included with economizer.
2. Sensors for optimizing economizer performance.
3. See application data for assistance.
4. Available on size 07–12 units with MOCPs of 80 amps or less and on size 14 units with MOCPs of 100 amps or less.
5. FDD (Fault Detection and Diagnostic) capability per California Title 24 section 120.2.
6. Models with RTU Open DDC controls comply with California Title 24 Fault Detection and Diagnostic (FDD). PremierLink is not FDD.
7. Requires a field–supplied 24V transformer for each application. See price pages for details.
8. SAV is required on all units for installation in the United States as per the Department of Energy (DOE) efficiency standard of 2018.
9. Not available with SAV.

FACTORY OPTIONS AND/OR ACCESSORIES (CONT)

Economizer

Economizers can reduce operating costs. They bring in fresh, outside air for ventilation; and provide cool, outside air to cool your building. This is the preferred method of low ambient cooling. When coupled to CO_2 sensors, economizers can limit the ventilation air to only that amount required.

Economizers are available, installed and tested by the factory, with either enthalpy or dry bulb temperature inputs. There are also models for electro-mechanical as well as direct digital controllers. Additional sensors are available as accessories to optimize the economizers.

Economizers include gravity controlled, barometric relief which equalizes building pressure and ambient air pressures. This can be a cost effective solution to prevent building pressurization. Economizers are available in Ultra Low Leak and standard low leak versions.

CO_2 Sensor

The CO_2 sensor works with the economizer to intake only the correct amount of outside air for ventilation. As occupants fill your building, the CO_2 sensor detects their presence through increasing CO_2 levels, and opens the economizer appropriately.

When the occupants leave, the CO_2 levels decrease, and the sensor appropriately closes the economizer. This intelligent control of the ventilation air, called Demand Controlled Ventilation (DCV) reduces the overall load on the rooftop, saving money.

Smoke Detectors

Trust the experts. Smoke detectors make your application safer and your job easier. Carrier smoke detectors immediately shut down the rooftop unit when smoke is detected. They are available, installed by the factory, for supply air, return air, or both.

Louvered Hail Guards

Sleek, louvered panels protect the condenser coil from hail damage, foreign objects, and incidental contact.

Convenience Outlet (powered or un-powered)

Reduce service and/or installation costs by including a convenience outlet in your specification. Carrier will install this service feature at our factory. Provides a convenient, 15 amp, 115v GFCI receptacle with “Wet in Use” cover. The “powered” option allows the installer to power the outlet from the line side of the disconnect as required by code. The “unpowered” option is to be powered from a separate (non-unit) 115/120v power source. The unpowered convenience outlet is available as a 15 amp factory-installed option or a 20 amp field-installed accessory.

The 20 amp unpowered convenience outlet kit provides a flexible installation method which allows code compliance for height requirements of the GFCI outlet from the finished roof surface as well as the capability to relocate the outlet to a more convenient location, if necessary.

Non-Fused Disconnect

This OSHA-compliant, factory-installed, safety switch allows a service technician to locally secure power to the rooftop.

When selecting a factory-installed non-fused disconnect, note they are sized for unit as ordered from the factory. The sizing of these does not accommodate any power exhaust devices, etc.

Power Exhaust Pressure Relief

Superior internal building pressure control. This field-installed accessory may eliminate the need for costly, external pressure control fans.

PremierLink™ Controller

This CCN controller regulates your rooftop’s performance to tighter tolerances and expanded limits, as well as facilitates zoning systems and digital accessories. It also unites your Carrier HVAC equipment together on one, coherent CCN network. The PremierLink controller can be factory-installed, or easily field-installed. Not available with Staged Air Volume (SAV™) fan speed system.

RTU Open, Multi-protocol Controller

Connect the rooftop to an existing BAS without needing complicated translators or adapter modules using the RTU Open controller. This new controller speaks the 4 most common building automation system languages (BACnet*, Modbus†, N2, and LonWorks**) Use this controller when you have an existing BAS.

Time Guard II Control Circuit

This accessory protects the compressor by preventing short-cycling in the event of some other failure, prevents the compressor from restarting for 30 seconds after stopping. Not required with PremierLink controller, RTU Open controller, or authorized commercial thermostats.

Filter or Fan Status Switches

Use these differential pressure switches to detect a filter clog or indoor fan motor failure. When used in conjunction with a compatible unit controller/thermostat, the switches will activate an alarm to warn the appropriate personnel.

* BACnet is a registered trademark of ASHRAE (American Society of Heating, Refrigerating and Air–Conditioning Engineers).

† Modbus is a registered trademark of Schneider Electric.

** LonWorks is a registered trademark of Echelon Corporation.

Motorized 2-Position Damper

The Carrier 2-position, motorized outdoor air damper admits up to 100% outside air. Using gear-driven technology, the 2-position damper opens to allow ventilation air and closes when the rooftop stops, stopping unwanted infiltration. Not available with Staged Air Volume (SAV) fan speed system.

Manual OA Damper

Manual outdoor air dampers are an economical way to bring in ventilation air. The dampers are available in 25% and 50% versions. Not available with Staged Air Volume (SAV™) system.

Staged Air Volume (SAV) Indoor Fan Speed System

Carrier's SAV fan speed system saves energy and installation time by utilizing a Variable Frequency Drive (VFD) to automatically adjust the indoor fan motor speed in sequence with the units cooling operation. Per ASHRAE 90.1-2016 and IECC*-2015 standards, during the first stage of cooling operation the VFD will adjust the fan motor to provide 66% of the total cfm established for the unit. When a call for the second stage of cooling is required, the VFD will allow the total cfm for the unit established (100%). During the heating mode the VFD will allow total design cfm (100%) operation and during the ventilation mode the VFD will allow operation to 66% of total cfm.

Compared to single speed indoor fan motor systems, Carrier's SAV system can save substantial energy, 25%+, versus single speed indoor fan motor systems.

IMPORTANT: Data based on .10 ($/kWh) in an office application utilizing Carrier's HAP 4.6 simulation software program.

The VFD used in Carrier's SAV system has soft start capabilities to slowly ramp up the speeds, thus eliminating any high inrush air volume during initial start-up. It also has internal over current protection for the fan motor and a field-installed display kit that allows adjustment and in depth diagnostics of the VFD.

This SAV system is available on models with electrical mechanical or RTU Open, Multi Protocol controls. Both space sensor and conventional thermostats controls can be used to provide accurate control in any application.

The SAV system is very flexible for initial fan performance set up and adjustment. The standard factory shipped VFD is pre-programmed to automatically stage the fan speed between the first and second stage of cooling. The unit fan performance static pressure and cfm can be easily adjusted using the traditional means of pulley adjustments. The other means to adjust the unit static and cfm performance is to utilize the field-installed Display Kit and adjust the frequency and voltage in the VFD to required performance requirements. In either case, once set up, the VFD will automatically adjust the speed between the cooling stage operations.

Motormaster® Head Pressure Controller

The Motormaster motor controller is a low ambient, head pressure controller kit that is designed to maintain the unit's condenser head pressure during periods of low ambient cooling operation. This device should be used as an alternative to economizer free cooling when economizer usage is either not appropriate or desired. The Motormaster controller will either cycle the outdoor fan motors or operate them at reduced speed to maintain the unit operation, depending on the model.

The Motormaster controller allows cooling operation down to -20°F (-29°C) ambient conditions.

Alternate Motors and Drives

Some applications need larger horsepower motors, some need more airflow, and some need both. Regardless of the case, your Carrier expert has a factory-installed combination to meet your application. A wide selection of motors and pulleys (drives) are available, factory-installed, to handle nearly any application.

Thru-the-Base Connections

Thru-the-base connections, available as either an accessory or as a factory option, are necessary to ensure proper connection and seal when routing wire and piping through the rooftop's basepan and curb. These couplings eliminate roof penetration and should be considered for gas lines, main power lines, as well as control power.

Disconnect Switch Bracket

Provides a pre-engineered and sized mounting bracket for applications requiring a unit mounted fused disconnect of greater than 100 amps. Bracket assures that no damage will occur to coils when mounting with screws and other fasteners. (Size 14 only.)

Supply Duct Cover

This supply duct cover is required when field converting the factory standard vertical duct supply to horizontal duct supply configuration. One is required per unit. (Size 14 only.)

Electric Heaters

Carrier offers a full line of field-installed accessory heaters. The heaters are very easy to use and install. All are pre-engineered and certified.

Thru-the-Base Connections

Thru-the-base connections, available as either an accessory or as a factory option, are necessary to ensure proper connection and seal when routing wire and piping through the rooftop's basepan and curb. These couplings eliminate roof penetration and should be considered for gas lines, main power lines, as well as control power.

* IECC is a registered trademark of International Code Council, Inc.

Table 2 – AHRI COOLING AND HEATING MODE RATINGS

COOLING MODE							
50TCQ	COOLING STAGES	NOMINAL CAPACITY (TONS)	NET COOLING CAPACITY (BTUH)	TOTAL POWER (kW)	EER	IEER WITH SINGLE SPEED INDOOR MOTOR	IEER WITH 2–SPEED INDOOR MOTOR
A07	1	6.0	69,000	6.2	11.1	12.5	12.7
D08	2	7.5	88,000	7.8	11.2	12.2	12.5
D09	2	8.5	99,000	8.8	11.2	12.2	12.5
D12	2	10.0	117,000	10.6	11.0	11.3	12.5
D14	2	12.5	142,000	13.3	10.6	10.7	12.0

HEATING MODE				
50TCQ	HEATING, LOW AT 17°F (–8°C) AMBIENT		HEATING, HIGH AT 47°F (8°C) AMBIENT	
	CAPACITY (BTUH)	COP	CAPACITY (BTUH)	COP
A07	31,800	2.25	66,000	3.5
D08	48,000	2.25	86,000	3.4
D09	54,500	2.25	96,000	3.3
D12	62,300	2.25	116,000	3.3
D14	76,000	2.05	142,000	3.2

LEGEND

AHRI – Air–Conditioning, Heating and Refrigeration Institute
ASHRAE – American Society of Heating, Refrigerating and Air–Conditioning Engineers
COP – Coefficient of Performance
EER – Energy Efficiency Ratio
IECC – International Energy Conservation Code
IEER – Integrated Energy Efficiency Ratio

NOTES:

1. Rated and certified under AHRI Standard 210/240 or 340/360, as appropriate.
2. Ratings are based on:
   Cooling Standard: 80°F (27°C) db, 67°F (19°C) wb indoor air temp and 95°F db outdoor air temp.
   IEER Standard: A measure that expresses cooling part–load EER efficiency for commercial unitary air conditioning and heat pump equipment on the basis of weighted operation at variable load capacities.
3. All 50TCQ units meet the DOE–2018 (Department of Energy), ASHRAE 90.1–2016 and IECC–2015 minimum efficiency requirements when equipped with the SAV™ (staged air volume) option.

Table 3 – MINIMUM - MAXIMUM AIRFLOWS (CFM) COOLING AND ELECTRIC HEAT

UNIT	COOLING				ELECTRIC HEATERS	
	MINIMUM	MINIMUM 2–SPEED FAN MOTOR (AT HIGH SPEED)	MINIMUM 2–SPEED FAN MOTOR (AT LOW SPEED)	MAXIMUM	MINIMUM	MAXIMUM
50TCQA07	1800	1800	1188	3000	1800	3000
50TCQD08	2250	2535	1690	3750	2250*	3750
50TCQD09	2550	2873	1915	4250	2550*	4250
50TCQD12	3000	3000	2000	5000	3000	5000
50TCQD14	3750	4056	2704	6250	3750	6250

* Minimum electric heat CFM exceptions (see table below):

UNIT	UNIT VOLTAGE	HEATER kW	UNIT CONFIGURATION	REQUIRED MINIMUM CFM
50TCQD08 50TCQD09	575	17.0	Horizontal or Vertical	2800
		34.0		2350

Table 4 – SOUND PERFORMANCE TABLE

50TCQ	OUTDOOR SOUND (dB)								
	A–WEIGHTED	63	125	250	500	1000	2000	4000	8000
A07	78	88.0	79.5	76.2	75.8	72.5	68.6	65.7	62.4
D08	82	89.7	81.5	80.5	79.2	77.1	73.2	70.2	67.4
D09	84	90.8	85.2	81.6	79.5	78.1	74.0	70.4	66.5
D12	87	88.1	90.0	85.9	83.0	81.6	78.5	76.4	75.5
D14	83	89.3	85.2	80.3	78.0	77.0	74.4	73.7	68.9

LEGEND
dB – Decibel

NOTES:
1. Outdoor sound data is measured in accordance with AHRI standard 270.
2. Measurements are expressed in terms of sound power. Do not compare these values to sound pressure values because sound pressure accounts for specific environmental factors which do not match individual applications. Sound power values are independent of the environment and therefore more accurate.
3. A–weighted sound ratings filter out very high and very low frequencies, to better approximate the response of an “average” human ear. A–weighted measurements for Carrier units are taken in accordance with 270.

		50TCQA07
Refrigeration System		
	# Circuits / # Comp. / Type	1 / 1 / Scroll
	Puron® refrig. (R–410A) charge per circuit A/B (lbs–oz)	17 – 10 / –
	Metering Device	Acutrol
	High pressure Trip / Reset (psig)	630 / 505
	Loss of Charge Pressure Trip / Reset (psig)	27 / 44
	Compressor Capacity Staging (%)	100%
Evap. Coil		
	Material – Tube / Fin	Cu / Al
	Coil type	3/8–in RTPF
	Rows / FPI	4/ 15
	Total Face Area (ft^2)	7.3
	Condensate Drain Conn. Size	3/4–in
Evap. Fan and Motor		
Standard Static 3 phase	Motor Qty / Drive Type	1 / Belt
	Max BHP	1.5
	RPM Range	878–1192
	Motor Frame Size	56
	Fan Qty / Type	1 / Centrifugal
	Fan Diameter x Length (in)	10 x 10
Medium Static 3 phase	Motor Qty / Drive Type	1 / Belt
	Max BHP	2.9
	RPM Range	1066–1380
	Motor Frame Size	56
	Fan Qty / Type	1 / Centrifugal
	Fan Diameter x Length (in)	10 x 10
High Static 3 phase	Motor Qty / Drive Type	1 / Belt
	Max BHP	2.9
	RPM Range	1208–1550
	Motor Frame Size	56
	Fan Qty / Type	1 / Centrifugal
	Fan Diameter x Length (in)	10 x 10
Cond. Coil		
	Material – Tube / Fin	Cu / Al
	Coil type	3/8–in RTPF
	Rows / FPI	2 / 17
	Total Face Area (ft^2)	21.3
Cond. fan / motor		
	Qty / Motor Drive Type	1 / Direct
	Motor HP / RPM	1/4 / 1100
	Fan diameter (in)	22
Filters		
	RA Filter # / Size (in)	4 / 16 x 16 x 2
	OA inlet screen # / Size (in)	1 / 20 x 24 x 1

Table 6 – PHYSICAL DATA (COOLING) 7.5 - 12.5 TONS

	50TCQD08	50TCQD09	50TCQD12	50TCQD14
Refrigeration System				
# Circuits / # Comp. / Type	2 / 2 / Scroll	2 / 2 / Scroll	2 / 2 / Scroll	2 / 2 / Scroll
Puron® refrig. (R–410A) charge per circuit A/B (lbs–oz)	10 – 3 / 10 – 3	11 – 2 / 11 – 2	12 – 2 / 11 – 2	14 – 8 / 13 – 8
Metering Device	Acutrol	Acutrol	Acutrol	Acutrol
High pressure Trip / Reset (psig)	630 / 505	630 / 505	630 / 505	630 / 505
Loss of Charge Pressure Trip / Reset (psig)	27 / 44	27 / 44	27 / 44	27 / 44
Compressor Capacity Staging (%)	50% / 100%	50% / 100%	50% / 100%	50% / 100%
Evap. Coil				
Material – Tube / Fin	Cu / Al	Cu / Al	Cu / Al	Cu / Al
Coil type	3/8–in RTPF	3/8–in RTPF	3/8–in RTPF	3/8–in RTPF
Rows / FPI	3 / 15	4 / 15	4 / 15	3 / 15
Total Face Area (ft^2)	11.1	11.1	11.1	17.5
Condensate Drain Conn. Size	3/4”	3/4”	3/4”	3/4”
Evap. Fan and Motor				
Standard Static 3 phase				
Motor Qty / Drive Type	1 / Belt	1 / Belt	1 / Belt	1 / Belt
Max BHP	1.2	1.2	1.2	2.9
RPM Range	460–652	460–652	460–652	507–676
Motor Frame Size	56	56	56	56
Fan Qty / Type	1 / Centrifugal	1 / Centrifugal	1 / Centrifugal	1 / Centrifugal
Fan Diameter x Length (in)	15 x 15	15 x 15	15 x 15	18 x 18
Medium Static 3 phase				
Motor Qty / Drive Type	1 / Belt	1 / Belt	1 / Belt	1 / Belt
Max BHP	2.9	2.9	2.9	2.9
RPM Range	591–838	591–838	591–838	634–833
Motor Frame Size	56	56	56	56
Fan Qty / Type	1 / Centrifugal	1 / Centrifugal	1 / Centrifugal	1 / Centrifugal
Fan Diameter x Length (in)	15 x 15	15 x 15	15 x 15	18 x 18
High Static 3 phase				
Motor Qty / Drive Type	1 / Belt	1 / Belt	1 / Belt	1 / Belt
Max BHP	2.9	2.9	2.9	6.1
RPM Range	838–1084	838–1084	838–1084	792–971
Motor Frame Size	56	56	56	S184T
Fan Qty / Type	1 / Centrifugal	1 / Centrifugal	1 / Centrifugal	1 / Centrifugal
Fan Diameter x Length (in)	15 x 15	15 x 15	15 x 15	18 x 18
High Static High Efficiency 3 phase				
Motor Qty / Drive Type	N/A	N/A	N/A	1 / Belt
Max BHP (208/230/460/575v)	N/A	N/A	N/A	6.5/6.9/7.0/8.3‡
RPM Range	N/A	N/A	N/A	776–955
Motor Frame Size	N/A	N/A	N/A	S184T
Fan Qty / Type	N/A	N/A	N/A	1 / Centrifugal
Fan Diameter x Length (in)	N/A	N/A	N/A	18 x 18
Cond. Coil				
Material – Tube / Fin	Cu / Al	Cu / Al	Cu / Al	Cu / Al
Coil type	3/8–in RTPF	3/8–in RTPF	3/8–in RTPF	3/8–in RTPF
Rows / FPI	2 / 17	2 / 17	3 / 17	2 / 17
Total Face Area (ft^2)	25.1	25.1	25.1	36.1
Cond. fan / motor				
Qty / Motor Drive Type	2 / Direct	2 / Direct	1 / Direct	3 / Direct
Motor HP / RPM	1/4 / 1100	1/4 / 1100	1 / 1175	1/4 / 1100
Fan diameter (in)	22	22	30	22
Filters				
RA Filter # / Size (in)	4 / 20 x 20 x 2	4 / 20 x 20 x 2	4 / 20 x 20 x 2	6 / 18 x 24 x 2
OA inlet screen # / Size (in)	1 / 20 x 24 x 1	1 / 20 x 24 x 1	1 / 20 x 24 x 1	2 / 24 x 27 x 1 (Vertical) 1 / 30 x 39 x 1 (Horizontal)

‡ On Size 14 units, Max BHP for the High Static/High Efficiency motor varies with the motor’s voltage; see the table below.

Voltage	BHP
208	6.5
230	6.9
460	7.0
575	8.3

Table 7 – 50TCQA07

ELECTRIC HEAT - ELECTRICAL DATA
SINGLE STAGE COOLING SINGLE SPEED INDOOR FAN MOTOR

NOM. V–Ph–Hz	IFM TYPE	ELECTRIC HEATER PART NUMBER CRHEATER	NOM PWR (kW)	APP PWR (kW)	SINGLE POINT KIT PART NUMBER CRSINGLE			
					WITHOUT C.O. or UNPWRD C.O.		WITH PWRD C.O.	
					WITHOUT P.E.	w/ P.E. (pwrd fr/unit)	WITHOUT P.E.	w/ P.E. (pwrd fr/unit)
208/ 230–3–60	STD	102A00	6.5	4.9/6.0	037A00	037A00	037A00	037A00
		104B00	10.5	7.9/9.6	038A00	038A00	038A00	038A00
		105A00	16.0	12.0/14.7	038A00	038A00	038A00	038A00
		104B00,104B00	21.0	15.8/19.3	039A00	039A00	039A00	039A00
		104B00,105A00	26.5	19.9/24.3	039A00	039A00	039A00	039A00
	MED	102A00	6.5	4.9/6.0	037A00	037A00	037A00	038A00
		104B00	10.5	7.9/9.6	038A00	038A00	038A00	038A00
		105A00	16.0	12.0/14.7	038A00	038A00	038A00	038A00
		104B00,104B00	21.0	15.8/19.3	039A00	039A00	039A00	039A00
		104B00,105A00	26.5	19.9/24.3	039A00	039A00	039A00	039A00
	HIGH	102A00	6.5	4.9/6.0	037A00	037A00	037A00	038A00
		104B00	10.5	7.9/9.6	038A00	038A00	038A00	038A00
		105A00	16.0	12.0/14.7	038A00	038A00	038A00	038A00
		104B00,104B00	21.0	15.8/19.3	039A00	039A00	039A00	039A00
		104B00,105A00	26.5	19.9/24.3	039A00	039A00	039A00	039A00
460–3–60	STD	106A00	6.0	5.5	–	–	–	–
		108A00	11.5	10.6	–	–	–	–
		109A00	14.0	12.9	–	–	–	–
		108A00,108A00	23.0	21.1	037A00	037A00	037A00	037A00
		108A00,109A00	25.5	23.4	037A00	037A00	037A00	037A00
	MED	106A00	6.0	5.5	–	–	–	–
		108A00	11.5	10.6	–	–	–	–
		109A00	14.0	12.9	–	–	–	–
		108A00,108A00	23.0	21.1	037A00	037A00	037A00	037A00
		108A00,109A00	25.5	23.4	037A00	037A00	037A00	037A00
	HIGH	106A00	6.0	5.5	–	–	–	–
		108A00	11.5	10.6	–	–	–	–
		109A00	14.0	12.9	–	–	–	–
		108A00,108A00	23.0	21.1	037A00	037A00	037A00	037A00
		108A00,109A00	25.5	23.4	037A00	037A00	037A00	037A00

LEGEND
– No Single Point Kit required
APP PWR – 208 / 230V / 460V / 575V
C.O. – Convenience outlet
IFM – Indoor fan motor
NOM PWR – 240V / 480V / 600V
P.E. – Power exhaust
Pwrd fr/unit – Powered from unit
PWRD C.O. – Powered convenience outlet
UNPWRD C.O. – Unpowered convenience outlet

Table 8 – 50TCQA07

ELECTRIC HEAT - ELECTRICAL DATA
SINGLE STAGE COOLING SINGLE SPEED INDOOR FAN AND FACTORY-INSTALLED NON-FUSED DISCONNECT SWITCH

NOM. V–Ph–Hz	IFM TYPE	ELECTRIC HEATER PART NUMBER CRHEATER	NOM PWR (kW)	APP PWR (kW)	SINGLE POINT KIT PART NUMBER CRSINGLE			
					WITHOUT C.O. or UNPWRD C.O.		WITH PWRD C.O.	
					WITHOUT P.E.	w/ P.E. (pwrd fr/unit)	WITHOUT P.E.	w/ P.E. (pwrd fr/unit)
208/230–3–60	STD	102A00	6.5	4.9/6.0	037A00	037A00	037A00	037A00
		104B00	10.5	7.9/9.6	038A00	038A00	038A00	038A00
		105A00	16.0	12.0/14.7	038A00	038A00	038A00	038A00
		104B00,104B00	21.0	15.8/19.3	039A00	039A00	039A00	039A00
		104B00,105A00	26.5	19.9/24.3	039A00	039A00	039A00	039A00
	MED	102A00	6.5	4.9/6.0	037A00	037A00	037A00	038A00
		104B00	10.5	7.9/9.6	038A00	038A00	038A00	038A00
		105A00	16.0	12.0/14.7	038A00	038A00	038A00	038A00
		104B00,104B00	21.0	15.8/19.3	039A00	039A00	039A00	039A00
		104B00,105A00	26.5	19.9/24.3	039A00	039A00	039A00	039A00
	HIGH	102A00	6.5	4.9/6.0	037A00	037A00	037A00	038A00
		104B00	10.5	7.9/9.6	038A00	038A00	038A00	038A00
		105A00	16.0	12.0/14.7	038A00	038A00	038A00	038A00
		104B00,104B00	21.0	15.8/19.3	039A00	039A00	039A00	039A00
		104B00,105A00	26.5	19.9/24.3	039A00	039A00	039A00	039A00
460–3–60	STD	106A00	6.0	5.5	–	–	–	–
		108A00	11.5	10.6	–	–	–	–
		109A00	14.0	12.9	–	–	–	–
		108A00,108A00	23.0	21.1	037A00	037A00	037A00	037A00
		108A00,109A00	25.5	23.4	037A00	037A00	037A00	037A00
	MED	106A00	6.0	5.5	–	–	–	–
		108A00	11.5	10.6	–	–	–	–
		109A00	14.0	12.9	–	–	–	–
		108A00,108A00	23.0	21.1	037A00	037A00	037A00	037A00
		108A00,109A00	25.5	23.4	037A00	037A00	037A00	037A00
	HIGH	106A00	6.0	5.5	–	–	–	–
		108A00	11.5	10.6	–	–	–	–
		109A00	14.0	12.9	–	–	–	–
		108A00,108A00	23.0	21.1	037A00	037A00	037A00	037A00
		108A00,109A00	25.5	23.4	037A00	037A00	037A00	037A00

LEGEND
– No Single Point Kit required
APP PWR – 208 / 230V / 460V / 575V
C.O. – Convenience outlet
IFM – Indoor fan motor
NOM PWR – 240V / 480V / 600V
P.E. – Power exhaust
Pwrd fr/unit – Powered from unit
PWRD C.O. – Powered convenience outlet
UNPWRD C.O. – Unpowered convenience outlet

Table 9 – 50TCQA07

ELECTRIC HEAT - ELECTRICAL DATA
SINGLE STAGE COOLING 2-SPEED INDOOR FAN MOTOR

NOM. V–Ph–Hz	IFM TYPE	ELECTRIC HEATER PART NUMBER CRHEATER	NOM PWR (kW)	APP PWR (kW)	SINGLE POINT KIT PART NUMBER CRSINGLE			
					WITHOUT C.O. or UNPWRD C.O.		WITH PWRD C.O.	
					WITHOUT P.E.	w/ P.E. (pwrd fr/unit)	WITHOUT P.E.	w/ P.E. (pwrd fr/unit)
208/ 230–3–60	STD	102A00	6.5	4.9/6.0	037A00	037A00	037A00	037A00
		104B00	10.5	7.9/9.6	038A00	038A00	038A00	038A00
		105A00	16.0	12.0/14.7	038A00	038A00	038A00	038A00
		104B00,104B00	21.0	15.8/19.3	039A00	039A00	039A00	039A00
		104B00,105A00	26.5	19.9/24.3	039A00	039A00	039A00	039A00
	MED	102A00	6.5	4.9/6.0	037A00	037A00	037A00	038A00
		104B00	10.5	7.9/9.6	038A00	038A00	038A00	038A00
		105A00	16.0	12.0/14.7	038A00	038A00	038A00	038A00
		104B00,104B00	21.0	15.8/19.3	039A00	039A00	039A00	039A00
		104B00,105A00	26.5	19.9/24.3	039A00	039A00	039A00	039A00
	HIGH	102A00	6.5	4.9/6.0	037A00	037A00	038A00	038A00
		104B00	10.5	7.9/9.6	038A00	038A00	038A00	038A00
		105A00	16.0	12.0/14.7	038A00	038A00	038A00	038A00
		104B00,104B00	21.0	15.8/19.3	039A00	039A00	039A00	039A00
		104B00,105A00	26.5	19.9/24.3	039A00	039A00	039A00	039A00
460–3–60	STD	106A00	6.0	5.5	–	–	–	–
		108A00	11.5	10.6	–	–	–	–
		109A00	14.0	12.9	–	–	–	–
		108A00,108A00	23.0	21.1	037A00	037A00	037A00	037A00
		108A00,109A00	25.5	23.4	037A00	037A00	037A00	037A00
	MED	106A00	6.0	5.5	–	–	–	–
		108A00	11.5	10.6	–	–	–	–
		109A00	14.0	12.9	–	–	–	–
		108A00,108A00	23.0	21.1	037A00	037A00	037A00	037A00
		108A00,109A00	25.5	23.4	037A00	037A00	037A00	037A00
	HIGH	106A00	6.0	5.5	–	–	–	–
		108A00	11.5	10.6	–	–	–	–
		109A00	14.0	12.9	–	–	–	–
		108A00,108A00	23.0	21.1	037A00	037A00	037A00	037A00
		108A00,109A00	25.5	23.4	037A00	037A00	037A00	037A00

LEGEND
– No Single Point Kit required
APP PWR – 208 / 230V / 460V / 575V
C.O. – Convenience outlet
IFM – Indoor fan motor
NOM PWR – 240V / 480V / 600V
P.E. – Power exhaust
Pwrd fr/unit – Powered from unit
PWRD C.O. – Powered convenience outlet
UNPWRD C.O. – Unpowered convenience outlet

Table 10 – 50TCQD08

ELECTRIC HEAT - ELECTRICAL DATA
2-STAGE COOLING SINGLE SPEED INDOOR FAN MOTOR

NOM. V–Ph–Hz	IFM TYPE	ELECTRIC HEATER PART NUMBER CRHEATER	NOM PWR (kW)	APP PWR (kW)	SINGLE POINT KIT PART NUMBER CRSINGLE			
					WITHOUT C.O. or UNPWRD C.O.		WITH PWRD C.O.	
					WITHOUT P.E.	w/ P.E. (pwrd fr/unit)	WITHOUT P.E.	w/ P.E. (pwrd fr/unit)
208/ 230–3–60	STD	117A00	10.4	7.8/9.6	049A00	049A00	049A00	049A00
		110A00	16.0	12.0/14.7	049A00	049A00	049A00	049A00
		111A00	24.8	18.6/22.8	051A00	051A00	051A00	051A00
		112A00	32.0	24.0/29.4	051A00	051A00	051A00	051A00
		112A00,117A00	42.4	31.8/38.9	053A00	053A00	053A00	053A00
	MED	117A00	10.4	7.8/9.6	049A00	049A00	049A00	049A00
		110A00	16.0	12.0/14.7	049A00	049A00	049A00	049A00
		111A00	24.8	18.6/22.8	051A00	051A00	051A00	051A00
		112A00	32.0	24.0/29.4	051A00	051A00	051A00	051A00
		112A00,117A00	42.4	31.8/38.9	053A00	053A00	053A00	053A00
	HIGH	117A00	10.4	7.8/9.6	049A00	049A00	049A00	049A00
		110A00	16.0	12.0/14.7	049A00	049A00	049A00	049A00
		111A00	24.8	18.6/22.8	051A00	051A00	051A00	051A00
		112A00	32.0	24.0/29.4	051A00	051A00	051A00	051A00
		112A00,117A00	42.4	31.8/38.9	053A00	053A00	053A00	053A00
460–3–60	STD	116B00	13.9	12.8	047A00	047A00	047A00	047A00
		113B00	16.5	15.2	047A00	047A00	047A00	047A00
		114B00	27.8	25.5	047A00	050A00	050A00	050A00
		115B00	33.0	30.3	050A00	050A00	050A00	050A00
		128B00	41.7	38.3	052A00	052A00	052A00	052A00
	MED	116B00	13.9	12.8	047A00	047A00	047A00	047A00
		113B00	16.5	15.2	047A00	047A00	047A00	047A00
		114B00	27.8	25.5	050A00	050A00	050A00	050A00
		115B00	33.0	30.3	050A00	050A00	050A00	050A00
		128B00	41.7	38.3	052A00	052A00	052A00	052A00
	HIGH	116B00	13.9	12.8	047A00	047A00	047A00	047A00
		113B00	16.5	15.2	047A00	047A00	047A00	047A00
		114B00	27.8	25.5	050A00	050A00	050A00	050A00
		115B00	33.0	30.3	050A00	050A00	050A00	050A00
		128B00	41.7	38.3	052A00	052A00	052A00	052A00
575–3–60	STD	118A00	18.0	16.5	047A00	047A00	047A00	047A00
		119A00	36.0	33.1	047A00	047A00	047A00	050A00
	MED	118A00	18.0	16.5	047A00	047A00	047A00	047A00
		119A00	36.0	33.1	047A00	050A00	047A00	050A00
	HIGH	118A00	18.0	16.5	047A00	047A00	047A00	047A00
		119A00	36.0	33.1	047A00	050A00	047A00	050A00

LEGEND
– No Single Point Kit required
APP PWR – 208 / 230V / 460V / 575V
C.O. – Convenience outlet
IFM – Indoor fan motor
NOM PWR – 240V / 480V / 600V
P.E. – Power exhaust
Pwrd fr/unit – Powered from unit
PWRD C.O. – Powered convenience outlet
UNPWRD C.O. – Unpowered convenience outlet

Table 11 – 50TCQD08

ELECTRIC HEAT - ELECTRICAL DATA
2-STAGE COOLING WITH AND WITHOUT 2-SPEED INDOOR FAN AND FACTORY-INSTALLED NON-FUSED DISCONNECT SWITCH

NOM. V–Ph–Hz	IFM TYPE	ELECTRIC HEATER PART NUMBER CRHEATER	NOM PWR (kW)	APP PWR (kW)	SINGLE POINT KIT PART NUMBER CRSINGLE			
					WITHOUT C.O. or UNPWRD C.O.		WITH PWRD C.O.	
					WITHOUT P.E.	w/ P.E. (pwrd fr/unit)	WITHOUT P.E.	w/ P.E. (pwrd fr/unit)
208/230–3–60	STD	117A00	10.4	7.8/9.6	049A00	049A00	049A00	049A00
		110A00	16.0	12.0/14.7	049A00	049A00	049A00	049A00
		111A00	24.8	18.6/22.8	051A00	051A00	051A00	051A00
		112A00	32.0	24.0/29.4	051A00	051A00	051A00	051A00
		112A00,117A00	42.4	31.8/38.9	053A00	053A00	053A00	053A00
	MED	117A00	10.4	7.8/9.6	049A00	049A00	049A00	049A00
		110A00	16.0	12.0/14.7	049A00	049A00	049A00	049A00
		111A00	24.8	18.6/22.8	051A00	051A00	051A00	051A00
		112A00	32.0	24.0/29.4	051A00	051A00	051A00	051A00
		112A00,117A00	42.4	31.8/38.9	053A00	053A00	053A00	053A00
	HIGH	117A00	10.4	7.8/9.6	049A00	049A00	049A00	049A00
		110A00	16.0	12.0/14.7	049A00	049A00	049A00	049A00
		111A00	24.8	18.6/22.8	051A00	051A00	051A00	051A00
		112A00	32.0	24.0/29.4	051A00	051A00	051A00	051A00
		112A00,117A00	42.4	31.8/38.9	053A00	053A00	053A00	053A00
460–3–60	STD	116B00	13.9	12.8	047A00	047A00	047A00	047A00
		113B00	16.5	15.2	047A00	047A00	047A00	047A00
		114B00	27.8	25.5	047A00	050A00	050A00	050A00
		115B00	33.0	30.3	050A00	050A00	050A00	050A00
		128B00	41.7	38.3	052A00	052A00	052A00	052A00
	MED	116B00	13.9	12.8	047A00	047A00	047A00	047A00
		113B00	16.5	15.2	047A00	047A00	047A00	047A00
		114B00	27.8	25.5	050A00	050A00	050A00	050A00
		115B00	33.0	30.3	050A00	050A00	050A00	050A00
		128B00	41.7	38.3	052A00	052A00	052A00	052A00
	HIGH	116B00	13.9	12.8	047A00	047A00	047A00	047A00
		113B00	16.5	15.2	047A00	047A00	047A00	047A00
		114B00	27.8	25.5	050A00	050A00	050A00	050A00
		115B00	33.0	30.3	050A00	050A00	050A00	050A00
		128B00	41.7	38.3	052A00	052A00	052A00	052A00
575–3–60	STD	118A00	18.0	16.5	047A00	047A00	047A00	047A00
		119A00	36.0	33.1	047A00	047A00	047A00	050A00
	MED	118A00	18.0	16.5	047A00	047A00	047A00	047A00
		119A00	36.0	33.1	047A00	050A00	047A00	050A00
	HIGH	118A00	18.0	16.5	047A00	047A00	047A00	047A00
		119A00	36.0	33.1	047A00	050A00	047A00	050A00

LEGEND
– No Single Point Kit required
APP PWR – 208 / 230V / 460V / 575V
C.O. – Convenience outlet
IFM – Indoor fan motor
NOM PWR – 240V / 480V / 600V
P.E. – Power exhaust
Pwrd fr/unit – Powered from unit
PWRD C.O. – Powered convenience outlet
UNPWRD C.O. – Unpowered convenience outlet

Table 12 – 50TCQD09

ELECTRIC HEAT - ELECTRICAL DATA
2-STAGE COOLING SINGLE SPEED INDOOR FAN MOTOR

NOM. V–Ph–Hz	IFM TYPE	ELECTRIC HEATER PART NUMBER CRHEATER	NOM PWR (kW)	APP PWR (kW)	SINGLE POINT KIT PART NUMBER CRSINGLE			
					WITHOUT C.O. or UNPWRD C.O.		WITH PWRD C.O.	
					WITHOUT P.E.	w/ P.E. (pwrd fr/unit)	WITHOUT P.E.	w/ P.E. (pwrd fr/unit)
208/230–3–60	STD	117A00	10.4	7.8/9.6	049A00	049A00	049A00	049A00
		110A00	16.0	12.0/14.7	049A00	049A00	049A00	049A00
		111A00	24.8	18.6/22.8	051A00	051A00	051A00	051A00
		112A00	32.0	24.0/29.4	051A00	051A00	051A00	051A00
		112A00,117A00	42.4	31.8/38.9	053A00	053A00	053A00	053A00
	MED	117A00	10.4	7.8/9.6	049A00	049A00	049A00	049A00
		110A00	16.0	12.0/14.7	049A00	049A00	049A00	049A00
		111A00	24.8	18.6/22.8	051A00	051A00	051A00	051A00
		112A00	32.0	24.0/29.4	051A00	051A00	051A00	051A00
		112A00,117A00	42.4	31.8/38.9	053A00	053A00	053A00	053A00
	HIGH	117A00	10.4	7.8/9.6	049A00	049A00	049A00	049A00
		110A00	16.0	12.0/14.7	049A00	049A00	049A00	049A00
		111A00	24.8	18.6/22.8	051A00	051A00	051A00	051A00
		112A00	32.0	24.0/29.4	051A00	051A00	051A00	051A00
		112A00,117A00	42.4	31.8/38.9	053A00	053A00	053A00	053A00
460–3–60	STD	116B00	13.9	12.8	047A00	047A00	047A00	047A00
		113B00	16.5	15.2	047A00	047A00	047A00	047A00
		114B00	27.8	25.5	050A00	050A00	050A00	050A00
		115B00	33.0	30.3	050A00	050A00	050A00	050A00
		128B00	41.7	38.3	052A00	052A00	052A00	052A00
	MED	116B00	13.9	12.8	047A00	047A00	047A00	047A00
		113B00	16.5	15.2	047A00	047A00	047A00	047A00
		114B00	27.8	25.5	050A00	050A00	050A00	050A00
		115B00	33.0	30.3	050A00	050A00	050A00	050A00
		128B00	41.7	38.3	052A00	052A00	052A00	052A00
	HIGH	116B00	13.9	12.8	047A00	047A00	047A00	047A00
		113B00	16.5	15.2	047A00	047A00	047A00	047A00
		114B00	27.8	25.5	050A00	050A00	050A00	050A00
		115B00	33.0	30.3	050A00	050A00	050A00	050A00
		128B00	41.7	38.3	052A00	052A00	052A00	052A00
575–3–60	STD	118A00	18.0	16.5	047A00	047A00	047A00	047A00
		119A00	36.0	33.1	047A00	050A00	050A00	050A00
	MED	118A00	18.0	16.5	047A00	047A00	047A00	047A00
		119A00	36.0	33.1	047A00	050A00	050A00	050A00
	HIGH	118A00	18.0	16.5	047A00	047A00	047A00	047A00
		119A00	36.0	33.1	047A00	050A00	050A00	050A00

LEGEND
– No Single Point Kit required
APP PWR – 208 / 230V / 460V / 575V
C.O. – Convenience outlet
IFM – Indoor fan motor
NOM PWR – 240V / 480V / 600V
P.E. – Power exhaust
Pwrd fr/unit – Powered from unit
PWRD C.O. – Powered convenience outlet
UNPWRD C.O. – Unpowered convenience outlet

Table 13 – 50TCQD09

ELECTRIC HEAT - ELECTRICAL DATA
2-STAGE COOLING WITH AND WITHOUT 2-SPEED INDOOR FAN AND FACTORY-INSTALLED NON-FUSED DISCONNECT SWITCH

NOM. V–Ph–Hz	IFM TYPE	ELECTRIC HEATER PART NUMBER CRHEATER	NOM PWR (kW)	APP PWR (kW)	SINGLE POINT KIT PART NUMBER CRSINGLE			
					WITHOUT C.O. or UNPWRD C.O.		WITH PWRD C.O.	
					WITHOUT P.E.	w/ P.E. (pwrd fr/unit)	WITHOUT P.E.	w/ P.E. (pwrd fr/unit)
208/ 203–3–60	STD	117A00	10.4	7.8/9.6	049A00	049A00	049A00	049A00
		110A00	16.0	12.0/14.7	049A00	049A00	049A00	049A00
		111A00	24.8	18.6/22.8	051A00	051A00	051A00	051A00
		112A00	32.0	24.0/29.4	051A00	051A00	051A00	051A00
		112A00,117A00	42.4	31.8/38.9	053A00	053A00	053A00	053A00
	MED	117A00	10.4	7.8/9.6	049A00	049A00	049A00	049A00
		110A00	16.0	12.0/14.7	049A00	049A00	049A00	049A00
		111A00	24.8	18.6/22.8	051A00	051A00	051A00	051A00
		112A00	32.0	24.0/29.4	051A00	051A00	051A00	051A00
		112A00,117A00	42.4	31.8/38.9	053A00	053A00	053A00	053A00
	HIGH	117A00	10.4	7.8/9.6	049A00	049A00	049A00	049A00
		110A00	16.0	12.0/14.7	049A00	049A00	049A00	049A00
		111A00	24.8	18.6/22.8	051A00	051A00	051A00	051A00
		112A00	32.0	24.0/29.4	051A00	051A00	051A00	051A00
		112A00,117A00	42.4	31.8/38.9	053A00	053A00	053A00	053A00
460–3–60	STD	116B00	13.9	12.8	047A00	047A00	047A00	047A00
		113B00	16.5	15.2	047A00	047A00	047A00	047A00
		114B00	27.8	25.5	050A00	050A00	050A00	050A00
		115B00	33.0	30.3	050A00	050A00	050A00	050A00
		128B00	41.7	38.3	052A00	052A00	052A00	052A00
	MED	116B00	13.9	12.8	047A00	047A00	047A00	047A00
		113B00	16.5	15.2	047A00	047A00	047A00	047A00
		114B00	27.8	25.5	050A00	050A00	050A00	050A00
		115B00	33.0	30.3	050A00	050A00	050A00	050A00
		128B00	41.7	38.3	052A00	052A00	052A00	052A00
	HIGH	116B00	13.9	12.8	047A00	047A00	047A00	047A00
		113B00	16.5	15.2	047A00	047A00	047A00	047A00
		114B00	27.8	25.5	050A00	050A00	050A00	050A00
		115B00	33.0	30.3	050A00	050A00	050A00	050A00
		128B00	41.7	38.3	052A00	052A00	052A00	052A00
575–3–60	STD	118A00	18.0	16.5	047A00	047A00	047A00	047A00
		119A00	36.0	33.1	047A00	050A00	050A00	050A00
	MED	118A00	18.0	16.5	047A00	047A00	047A00	047A00
		119A00	36.0	33.1	047A00	050A00	050A00	050A00
	HIGH	118A00	18.0	16.5	047A00	047A00	047A00	047A00
		119A00	36.0	33.1	047A00	050A00	050A00	050A00

LEGEND
– No Single Point Kit required
APP PWR – 208 / 230V / 460V / 575V
C.O. – Convenience outlet
IFM – Indoor fan motor
NOM PWR – 240V / 480V / 600V
P.E. – Power exhaust
Pwrd fr/unit – Powered from unit
PWRD C.O. – Powered convenience outlet
UNPWRD C.O. – Unpowered convenience outlet

NOM. V–Ph–Hz	IFM TYPE	ELECTRIC HEATER PART NUMBER CRHEATER	NOM PWR (kW)	APP PWR (kW)	SINGLE POINT KIT PART NUMBER CRSINGLE			
					WITHOUT C.O. or UNPWRD C.O.		WITH PWRD C.O.	
					WITHOUT P.E.	w/ P.E. (pwrd fr/unit)	WITHOUT P.E.	w/ P.E. (pwrd fr/unit)
208/230–3–60	STD	117A00	10.4	7.8/9.6	049A00	049A00	049A00	049A00
		110A00	16.0	12.0/14.7	049A00	049A00	049A00	049A00
		112A00	32.0	24.0/29.4	051A00	051A00	051A00	051A00
		112A00,117A00	42.4	31.8/38.9	053A00	053A00	053A00	053A00
		112A00,110A00	50.0	37.6/45.9	053A00	053A00	053A00	053A00
	MED	117A00	10.4	7.8/9.6	049A00	051A00	051A00	051A00
		110A00	16.0	12.0/14.7	049A00	051A00	051A00	051A00
		112A00	32.0	24.0/29.4	051A00	053A00	053A00	053A00
		112A00,117A00	42.4	31.8/38.9	053A00	054A00	054A00	054A00
		112A00,110A00	50.0	37.6/45.9	053A00	054A00	054A00	054A00
	HIGH	117A00	10.4	7.8/9.6	049A00	051A00	051A00	051A00
		110A00	16.0	12.0/14.7	049A00	051A00	051A00	051A00
		112A00	32.0	24.0/29.4	051A00	053A00	053A00	053A00
		112A00,117A00	42.4	31.8/38.9	053A00	054A00	054A00	054A00
		112A00,110A00	50.0	37.6/45.9	053A00	054A00	054A00	054A00
460–3–60	STD	116B00	13.9	12.8	047A00	047A00	047A00	047A00
		113B00	16.5	15.2	047A00	047A00	047A00	047A00
		115B00	33.0	30.3	050A00	050A00	050A00	050A00
		128B00	41.7	38.3	052A00	052A00	052A00	052A00
		129B00	50.0	45.9	052A00	052A00	052A00	052A00
	MED	116B00	13.9	12.8	047A00	047A00	047A00	047A00
		113B00	16.5	15.2	047A00	047A00	047A00	047A00
		115B00	33.0	30.3	050A00	050A00	050A00	050A00
		128B00	41.7	38.3	052A00	052A00	052A00	052A00
		129B00	50.0	45.9	052A00	052A00	052A00	052A00
	HIGH	116B00	13.9	12.8	047A00	047A00	047A00	047A00
		113B00	16.5	15.2	047A00	047A00	047A00	047A00
		115B00	33.0	30.3	050A00	050A00	050A00	050A00
		128B00	41.7	38.3	052A00	052A00	052A00	052A00
		129B00	50.0	45.9	052A00	052A00	052A00	052A00
575–3–60	STD	118A00	18.0	16.5	047A00	047A00	047A00	047A00
		119A00	36.0	33.1	050A00	050A00	050A00	050A00
		118A00,119A00	54.0	49.6	052A00	052A00	052A00	052A00
	MED	118A00	18.0	16.5	047A00	047A00	047A00	047A00
		119A00	36.0	33.1	050A00	050A00	050A00	050A00
		118A00,119A00	54.0	49.6	052A00	052A00	052A00	052A00
	HIGH	118A00	18.0	16.5	047A00	047A00	047A00	047A00
		119A00	36.0	33.1	050A00	050A00	050A00	050A00
		118A00,119A00	54.0	49.6	052A00	052A00	052A00	052A00

LEGEND
– No Single Point Kit required
APP PWR – 208 / 230V / 460V / 575V
C.O. – Convenience outlet
IFM – Indoor fan motor
NOM PWR – 240V / 480V / 600V
P.E. – Power exhaust
Pwrd fr/unit – Powered from unit
PWRD C.O. – Powered convenience outlet
UNPWRD C.O. – Unpowered convenience outlet

Table 15 – 50TCQD12

ELECTRIC HEAT - ELECTRICAL DATA
2-STAGE COOLING WITH AND WITHOUT 2-SPEED INDOOR FAN AND FACTORY-INSTALLED NON-FUSED DISCONNECT SWITCH

NOM. V–Ph–Hz	IFM TYPE	ELECTRIC HEATER PART NUMBER CRHEATER	NOM PWR (kW)	APP PWR (kW)	SINGLE POINT KIT PART NUMBER CRSINGLE			
					WITHOUT C.O. or UNPWRD C.O.		WITH PWRD C.O.	
					WITHOUT P.E.	w/ P.E. (pwrd fr/unit)	WITHOUT P.E.	w/ P.E. (pwrd fr/unit)
208/230–3–60	STD	117A00	10.4	7.8/9.6	049A00	049A00	049A00	049A00
		110A00	16.0	12.0/14.7	049A00	049A00	049A00	049A00
		112A00	32.0	24.0/29.4	051A00	051A00	051A00	051A00
		112A00,117A00	42.4	31.8/38.9	053A00	053A00	053A00	053A00
		112A00,110A00	50.0	37.6/45.9	053A00	053A00	053A00	053A00
	MED	117A00	10.4	7.8/9.6	049A00	051A00	051A00	051A00
		110A00	16.0	12.0/14.7	049A00	051A00	051A00	051A00
		112A00	32.0	24.0/29.4	051A00	053A00	053A00	053A00
		112A00,117A00	42.4	31.8/38.9	053A00	054A00	054A00	054A00
		112A00,110A00	50.0	37.6/45.9	053A00	054A00	054A00	054A00
	HIGH	117A00	10.4	7.8/9.6	049A00	051A00	051A00	051A00
		110A00	16.0	12.0/14.7	049A00	051A00	051A00	051A00
		112A00	32.0	24.0/29.4	051A00	053A00	053A00	053A00
		112A00,117A00	42.4	31.8/38.9	053A00	054A00	054A00	054A00
		112A00,110A00	50.0	37.6/45.9	053A00	054A00	054A00	054A00
460–3–60	STD	116B00	13.9	12.8	047A00	047A00	047A00	047A00
		113B00	16.5	15.2	047A00	047A00	047A00	047A00
		115B00	33.0	30.3	050A00	050A00	050A00	050A00
		128B00	41.7	38.3	052A00	052A00	052A00	052A00
		129B00	50.0	45.9	052A00	052A00	052A00	052A00
	MED	116B00	13.9	12.8	047A00	047A00	047A00	047A00
		113B00	16.5	15.2	047A00	047A00	047A00	047A00
		115B00	33.0	30.3	050A00	050A00	050A00	050A00
		128B00	41.7	38.3	052A00	052A00	052A00	052A00
		129B00	50.0	45.9	052A00	052A00	052A00	052A00
	HIGH	116B00	13.9	12.8	047A00	047A00	047A00	047A00
		113B00	16.5	15.2	047A00	047A00	047A00	047A00
		115B00	33.0	30.3	050A00	050A00	050A00	050A00
		128B00	41.7	38.3	052A00	052A00	052A00	052A00
		129B00	50.0	45.9	052A00	052A00	052A00	052A00
575–3–60	STD	118A00	18.0	16.5	047A00	047A00	047A00	047A00
		119A00	36.0	33.1	050A00	050A00	050A00	050A00
		118A00,119A00	54.0	49.6	052A00	052A00	052A00	052A00
	MED	118A00	18.0	16.5	047A00	047A00	047A00	047A00
		119A00	36.0	33.1	050A00	050A00	050A00	050A00
		118A00,119A00	54.0	49.6	052A00	052A00	052A00	052A00
	HIGH	118A00	18.0	16.5	047A00	047A00	047A00	047A00
		119A00	36.0	33.1	050A00	050A00	050A00	050A00
		118A00,119A00	54.0	49.6	052A00	052A00	052A00	052A00

LEGEND
– No Single Point Kit required
APP PWR – 208 / 230V / 460V / 575V
C.O. – Convenience outlet
IFM – Indoor fan motor
NOM PWR – 240V / 480V / 600V
P.E. – Power exhaust
Pwrd fr/unit – Powered from unit
PWRD C.O. – Powered convenience outlet
UNPWRD C.O. – Unpowered convenience outlet

NOM. V–Ph–Hz	IFM TYPE	ELECTRIC HEATER PART NUMBER CRHEATER	NOM PWR (kW)	APP PWR (kW)	SINGLE POINT KIT PART NUMBER CRSINGLE			
					WITHOUT C.O. or UNPWRD C.O.		WITH PWRD C.O.	
					WITHOUT P.E.	w/ P.E. (pwrd fr/unit)	WITHOUT P.E.	w/ P.E. (pwrd fr/unit)
208/ 230–3–60	STD	291A00	16.5	12.4/15.2	051A00	051A00	051A00	051A00
		288A00,291A00	26.5	19.9/24.3	053A00	053A00	053A00	053A00
		294A00	33.5	25.2/30.8	053A00	053A00	053A00	053A00
		288A00,294A00	43.5	32.7/40.0	054A00	054A00	054A00	054A00
		291A00,294A00	50.0	37.6/45.9	054A00	054A00	054A00	054A00
	MED	291A00	16.5	12.4/15.2	051A00	051A00	051A00	051A00
		288A00,291A00	26.5	19.9/24.3	053A00	053A00	053A00	053A00
		294A00	33.5	25.2/30.8	053A00	053A00	053A00	053A00
		288A00,294A00	43.5	32.7/40.0	054A00	054A00	054A00	054A00
		291A00,294A00	50.0	37.6/45.9	054A00	054A00	054A00	054A00
	HIGH	291A00	16.5	12.4/15.2	051A00	051A00	051A00	051A00
		288A00,291A00	26.5	19.9/24.3	053A00	053A00	053A00	053A00
		294A00	33.5	25.2/30.8	053A00	053A00	053A00	053A00
		288A00,294A00	43.5	32.7/40.0	054A00	054A00	054A00	054A00
		291A00,294A00	50.0	37.6/45.9	054A00	054A00	054A00	054A00
460–3–60	STD	292A00	16.5	15.2	047A00	047A00	047A00	047A00
		289A00,292A00	26.5	24.3	050A00	050A00	050A00	050A00
		295A00	33.5	30.8	050A00	050A00	050A00	050A00
		289A00,295A00	43.5	40.0	052A00	052A00	052A00	052A00
		292A00,295A00	50.0	45.9	052A00	052A00	052A00	052A00
	MED	292A00	16.5	15.2	047A00	047A00	047A00	047A00
		289A00,292A00	26.5	24.3	050A00	050A00	050A00	050A00
		295A00	33.5	30.8	050A00	050A00	050A00	050A00
		289A00,295A00	43.5	40.0	052A00	052A00	052A00	052A00
		292A00,295A00	50.0	45.9	052A00	052A00	052A00	052A00
	HIGH	292A00	16.5	15.2	050A00	050A00	050A00	050A00
		289A00,292A00	26.5	24.3	050A00	050A00	050A00	050A00
		295A00	33.5	30.8	050A00	050A00	050A00	050A00
		289A00,295A00	43.5	40.0	052A00	052A00	052A00	052A00
		292A00,295A00	50.0	45.9	052A00	052A00	052A00	052A00
575–3–60	STD	293A00	16.5	15.2	047A00	047A00	047A00	047A00
		290A00,293A00	26.5	24.3	047A00	047A00	047A00	050A00
		296A00	33.5	30.8	050A00	050A00	050A00	050A00
		290A00,296A00	43.5	40.0	052A00	052A00	052A00	052A00
		293A00,296A00	50.0	45.9	052A00	052A00	052A00	052A00
	MED	293A00	16.5	15.2	047A00	047A00	047A00	047A00
		290A00,293A00	26.5	24.3	047A00	047A00	047A00	050A00
		296A00	33.5	30.8	050A00	050A00	050A00	050A00
		290A00,296A00	43.5	40.0	052A00	052A00	052A00	052A00
		293A00,296A00	50.0	45.9	052A00	052A00	052A00	052A00
	HIGH	293A00	16.5	15.2	047A00	047A00	047A00	047A00
		290A00,293A00	26.5	24.3	050A00	050A00	050A00	050A00
		296A00	33.5	30.8	050A00	050A00	050A00	050A00
		290A00,296A00	43.5	40.0	052A00	052A00	052A00	052A00
		293A00,296A00	50.0	45.9	052A00	052A00	052A00	052A00

LEGEND
– No Single Point Kit required
APP PWR – 208 / 230V / 460V / 575V
C.O. – Convenience outlet
IFM – Indoor fan motor
NOM PWR – 240V / 480V / 600V
P.E. – Power exhaust
Pwrd fr/unit – Powered from unit
PWRD C.O. – Powered convenience outlet
UNPWRD C.O. – Unpowered convenience outlet

Table 17 – 50TCQD14

ELECTRIC HEAT - ELECTRICAL DATA
2-STAGE COOLING WITH AND WITHOUT 2-SPEED INDOOR FAN AND FACTORY-INSTALLED NON-FUSED DISCONNECT SWITCH

NOM. V–Ph–Hz	IFM TYPE	ELECTRIC HEATER PART NUMBER CRHEATER	NOM PWR (kW)	APP PWR (kW)	SINGLE POINT KIT PART NUMBER CRSINGLE			
					WITHOUT C.O. or UNPWRD C.O.		WITH PWRD C.O.	
					WITHOUT P.E.	w/ P.E. (pwrd fr/unit)	WITHOUT P.E.	w/ P.E. (pwrd fr/unit)
208/230–3–60	STD	291A00	16.5	12.4/15.2	051A00	051A00	051A00	051A00
		288A00,291A00	26.5	19.9/24.3	053A00	053A00	053A00	053A00
		294A00	33.5	25.2/30.8	053A00	053A00	053A00	053A00
		288A00,294A00	43.5	32.7/40.0	054A00	054A00	054A00	054A00
		291A00,294A00	50.0	37.6/45.9	054A00	054A00	054A00	054A00
	MED	291A00	16.5	12.4/15.2	051A00	051A00	051A00	051A00
		288A00,291A00	26.5	19.9/24.3	053A00	053A00	053A00	053A00
		294A00	33.5	25.2/30.8	053A00	053A00	053A00	053A00
		288A00,294A00	43.5	32.7/40.0	054A00	054A00	054A00	054A00
		291A00,294A00	50.0	37.6/45.9	054A00	054A00	054A00	054A00
	HIGH	291A00	16.5	12.4/15.2	051A00	051A00	051A00	051A00
		288A00,291A00	26.5	19.9/24.3	053A00	053A00	053A00	053A00
		294A00	33.5	25.2/30.8	053A00	053A00	053A00	053A00
		288A00,294A00	43.5	32.7/40.0	054A00	054A00	054A00	054A00
		291A00,294A00	50.0	37.6/45.9	054A00	054A00	054A00	054A00
460–3–60	STD	292A00	16.5	15.2	047A00	047A00	047A00	047A00
		289A00,292A00	26.5	24.3	050A00	050A00	050A00	050A00
		295A00	33.5	30.8	050A00	050A00	050A00	050A00
		289A00,295A00	43.5	40.0	052A00	052A00	052A00	052A00
		292A00,295A00	50.0	45.9	052A00	052A00	052A00	052A00
	MED	292A00	16.5	15.2	047A00	047A00	047A00	047A00
		289A00,292A00	26.5	24.3	050A00	050A00	050A00	050A00
		295A00	33.5	30.8	050A00	050A00	050A00	050A00
		289A00,295A00	43.5	40.0	052A00	052A00	052A00	052A00
		292A00,295A00	50.0	45.9	052A00	052A00	052A00	052A00
	HIGH	292A00	16.5	15.2	050A00	050A00	050A00	050A00
		289A00,292A00	26.5	24.3	050A00	050A00	050A00	050A00
		295A00	33.5	30.8	050A00	050A00	050A00	050A00
		289A00,295A00	43.5	40.0	052A00	052A00	052A00	052A00
		292A00,295A00	50.0	45.9	052A00	052A00	052A00	052A00
575–3–60	STD	293A00	16.5	15.2	047A00	047A00	047A00	047A00
		290A00,293A00	26.5	24.3	047A00	047A00	047A00	050A00
		296A00	33.5	30.8	050A00	050A00	050A00	050A00
		290A00,296A00	43.5	40.0	052A00	052A00	052A00	052A00
		293A00,296A00	50.0	45.9	052A00	052A00	052A00	052A00
	MED	293A00	16.5	15.2	047A00	047A00	047A00	047A00
		290A00,293A00	26.5	24.3	047A00	047A00	047A00	050A00
		296A00	33.5	30.8	050A00	050A00	050A00	050A00
		290A00,296A00	43.5	40.0	052A00	052A00	052A00	052A00
		293A00,296A00	50.0	45.9	052A00	052A00	052A00	052A00
	HIGH	293A00	16.5	15.2	047A00	047A00	047A00	047A00
		290A00,293A00	26.5	24.3	050A00	050A00	050A00	050A00
		296A00	33.5	30.8	050A00	050A00	050A00	050A00
		290A00,296A00	43.5	40.0	052A00	052A00	052A00	052A00
		293A00,296A00	50.0	45.9	052A00	052A00	052A00	052A00

LEGEND
– No Single Point Kit required
APP PWR – 208 / 230V / 460V / 575V
C.O. – Convenience outlet
IFM – Indoor fan motor
NOM PWR – 240V / 480V / 600V
P.E. – Power exhaust
Pwrd fr/unit – Powered from unit
PWRD C.O. – Powered convenience outlet
UNPWRD C.O. – Unpowered convenience outlet

WEIGHTS AND DIMENSIONS

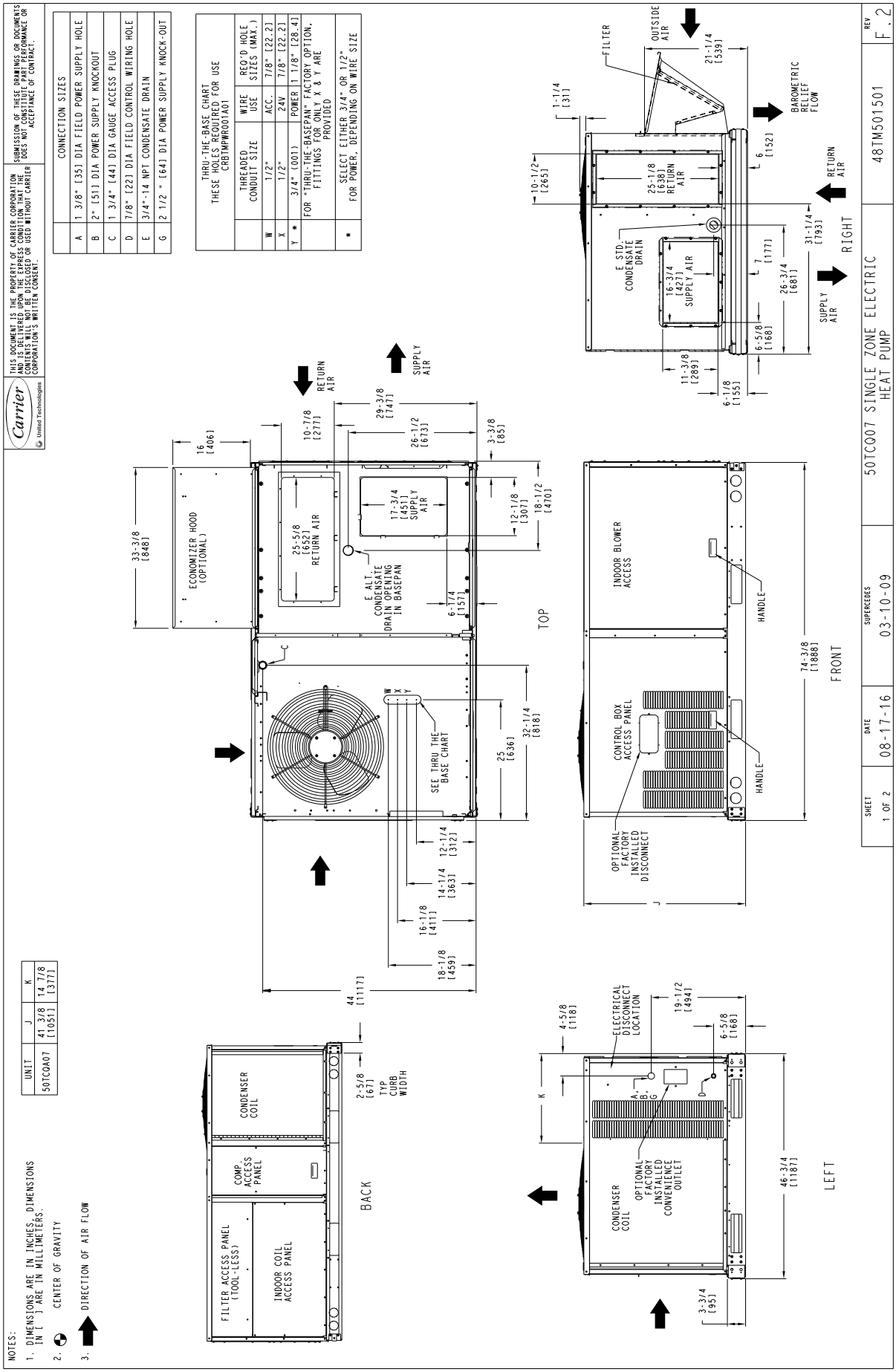

a50-9663

Fig. 1 - Dimensions 50TCQ 07

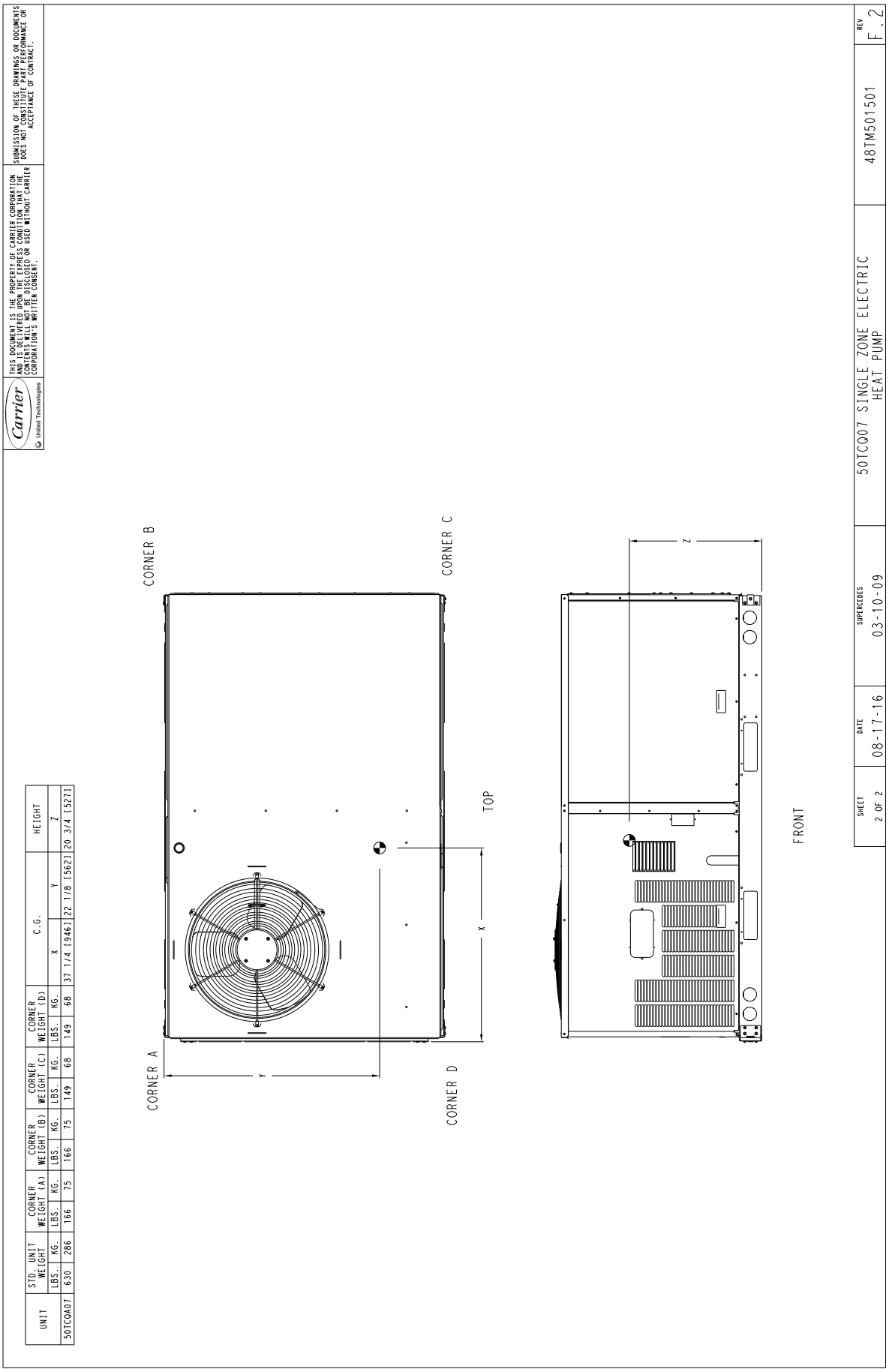

UNIT	STD. UNIT WEIGHT		CORNER WEIGHT (A)		CORNER WEIGHT (B)		CORNER WEIGHT (C)		CORNER WEIGHT (D)		C.G.		HEIGHT
	LBS.	KG.	LBS.	KG.	LBS.	KG.	LBS.	KG.	LBS.	KG.	X	Y	Z
50TCQA07	630	286	166	75	166	75	149	68	149	68	37 1/4 [946]	22 1/8 [562]	20 3/4 [527]

a50-9664

Fig. 2 - Dimensions 50TCQ 07

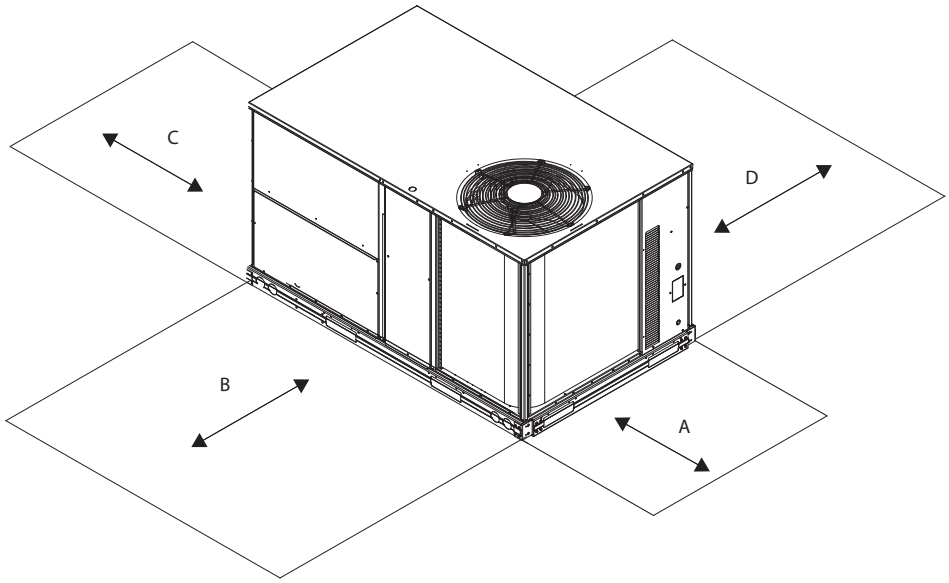

C08337

Fig. 3 – Service Clearance

LOCATION	DIMENSION	CONDITION
A	48 – in. (1219 mm)	Unit disconnect is mounted on panel
	18 – in. (457 mm)	No disconnect, convenience outlet option
	18 – in. (457 mm)	Recommended service clearance
	12 – in. (305 mm)	Minimum clearance
B	42 – in. (1067 mm)	Surface behind servicer is grounded (e.g., metal, masonry wall)
	36 – in. (914 mm)	Surface behind servicer is electrically non – conductive (e.g., wood, fiberglass)
	Special	Check for sources of flue products within 10 – ft of unit fresh air intake hood
C	36 – in. (914 mm)	Side condensate drain is used
	18 – in. (457 mm)	Minimum clearance
D	42 – in. (1067 mm)	Surface behind servicer is grounded (e.g., metal, masonry wall, another unit)
	36 – in. (914 mm)	Surface behind servicer is electrically non – conductive (e.g., wood, fiberglass)

NOTE: Unit not designed to have overhead obstruction. Contact Application Engineering for guidance on any application planning overhead obstruction or for vertical clearances.

WEIGHTS AND DIMENSIONS (cont)

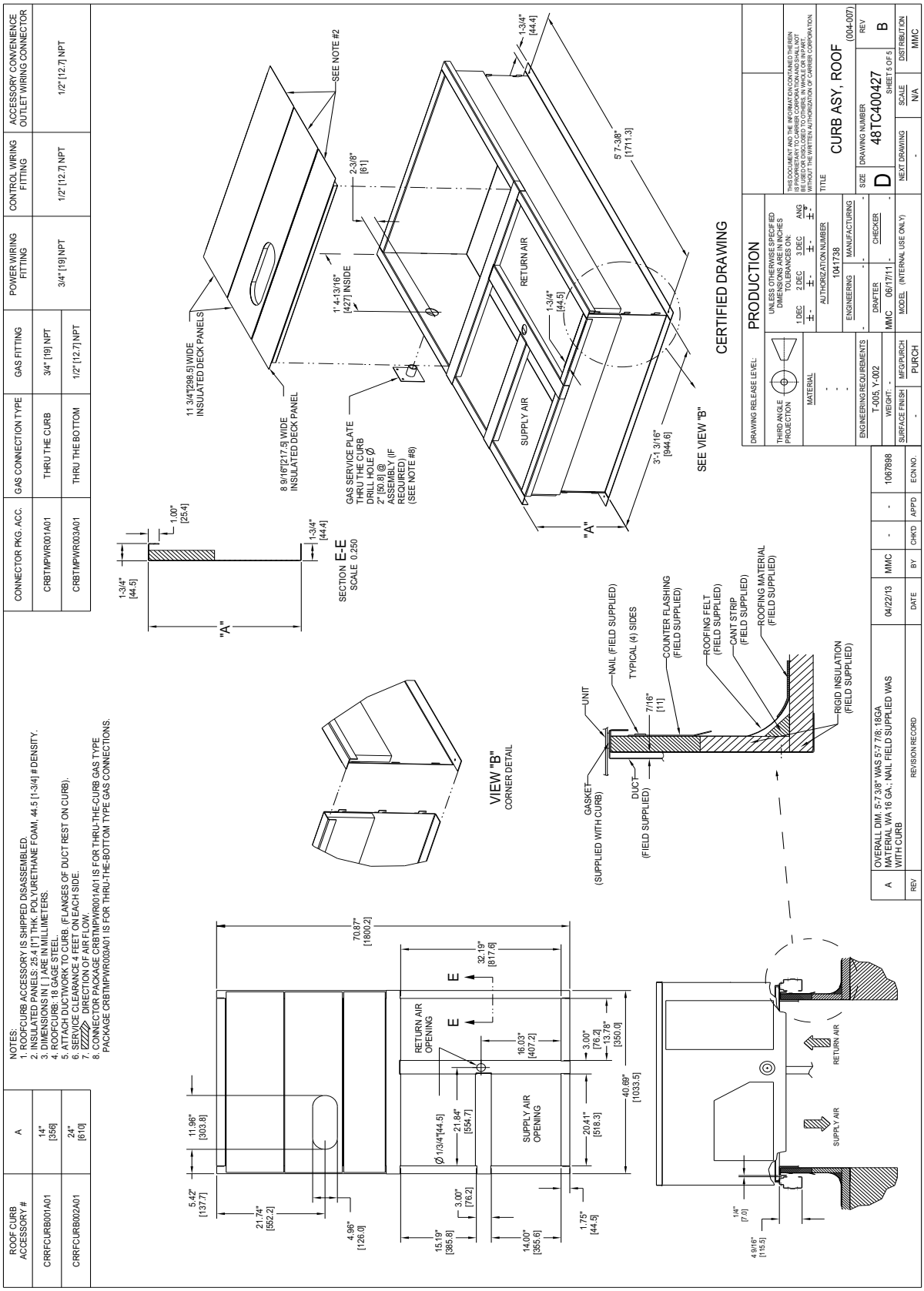

C13310

Fig. 4 – Curb Dimensions 50TCQ 07

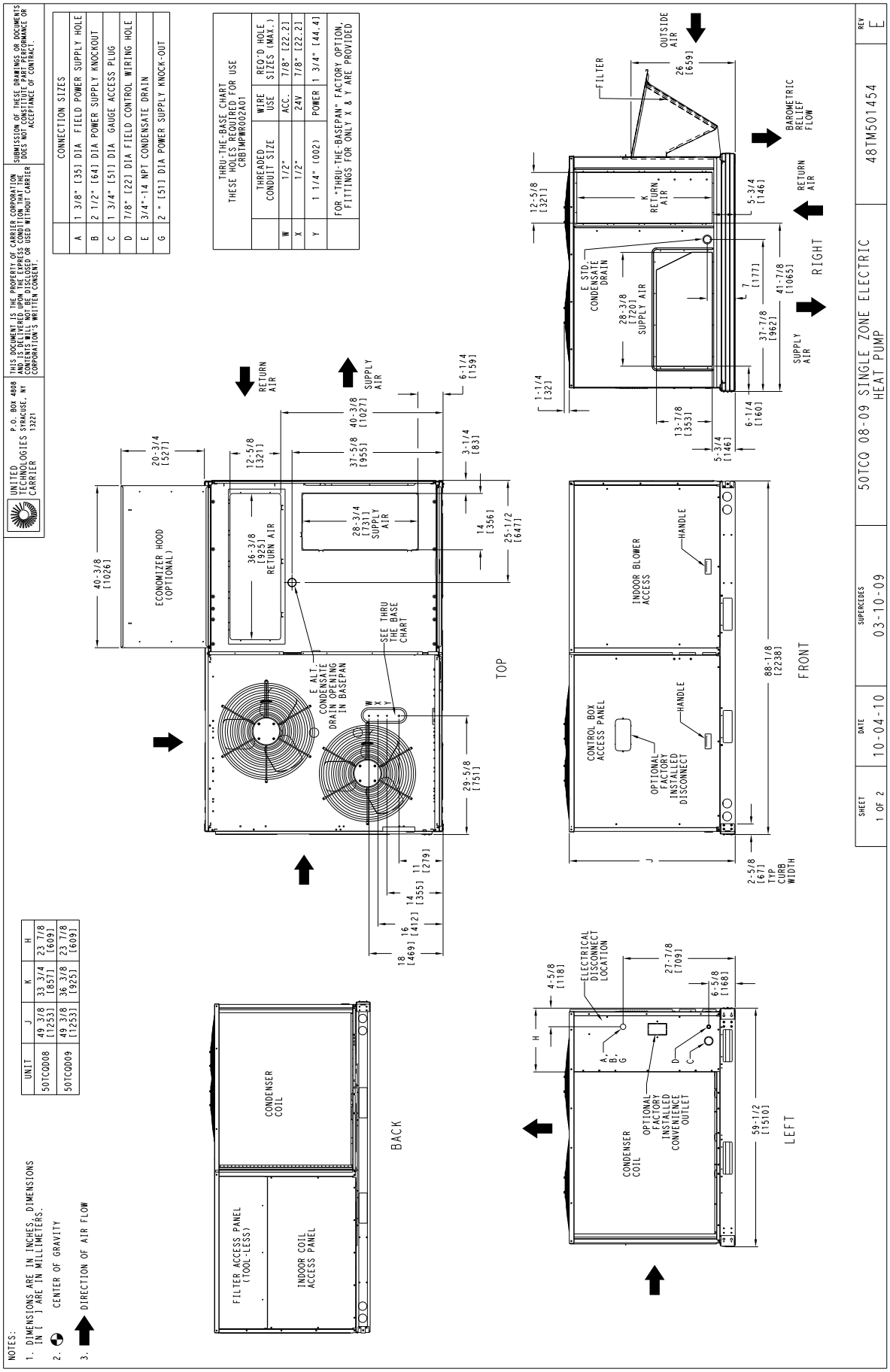

C12040

Fig. 5 – Dimensions 50TCQ 08-09

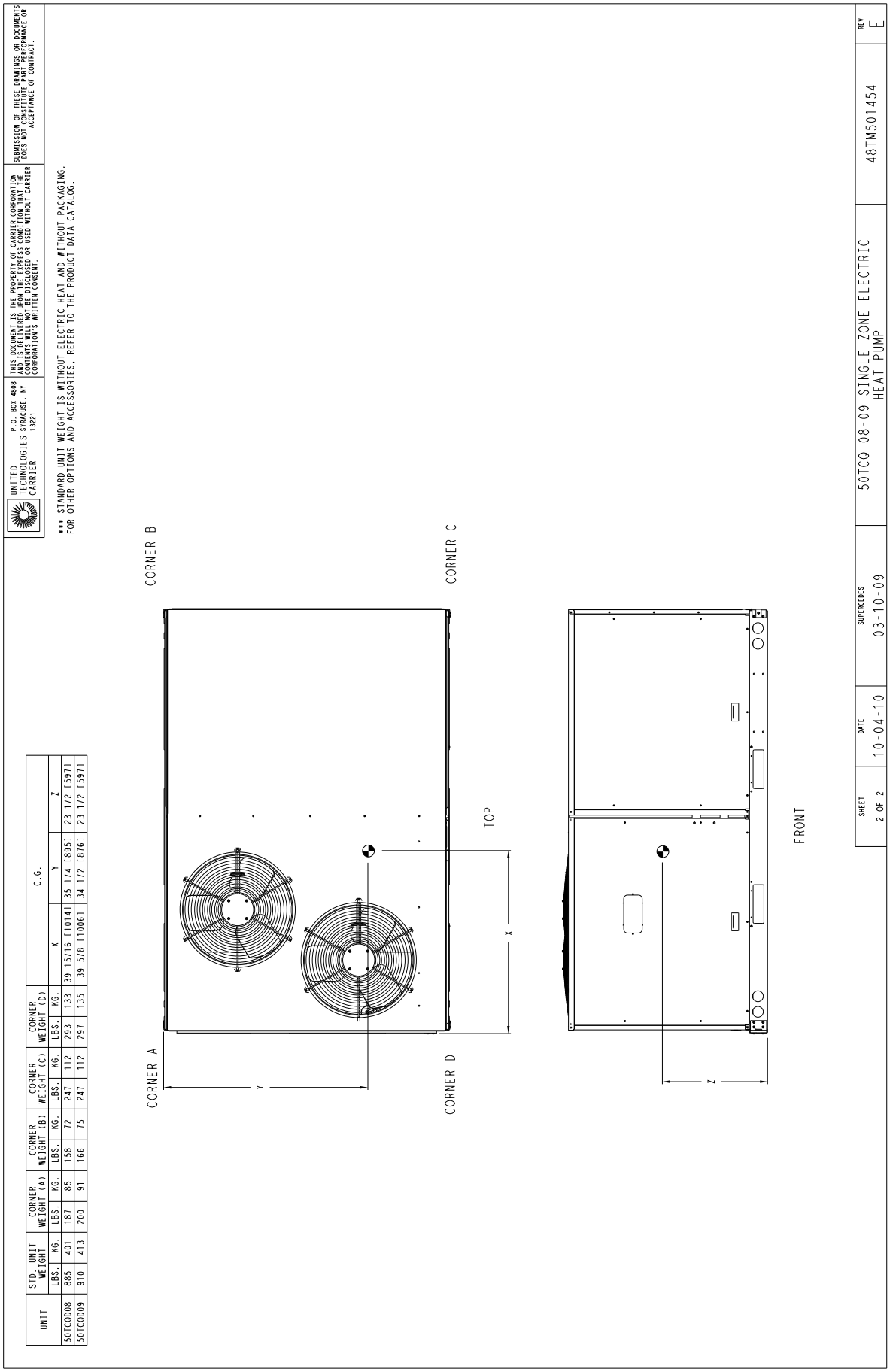

UNIT	STD. UNIT WEIGHT		CORNER WEIGHT (A)		CORNER WEIGHT (B)		CORNER WEIGHT (C)		CORNER WEIGHT (D)		C.G.		
	LBS.	KG.	LBS.	KG.	LBS.	KG.	LBS.	KG.	LBS.	KG.	X	Y	Z
50TCQD08	885	401	187	85	158	72	247	112	293	133	39 15/16 [1014]	35 1/4 [895]	23 1/2 [597]
50TCQD09	910	413	200	91	166	75	247	112	297	135	39 5/8 [1006]	34 1/2 [876]	23 1/2 [597]

C12041

Fig. 6 – Dimensions 50TCQ 08-09

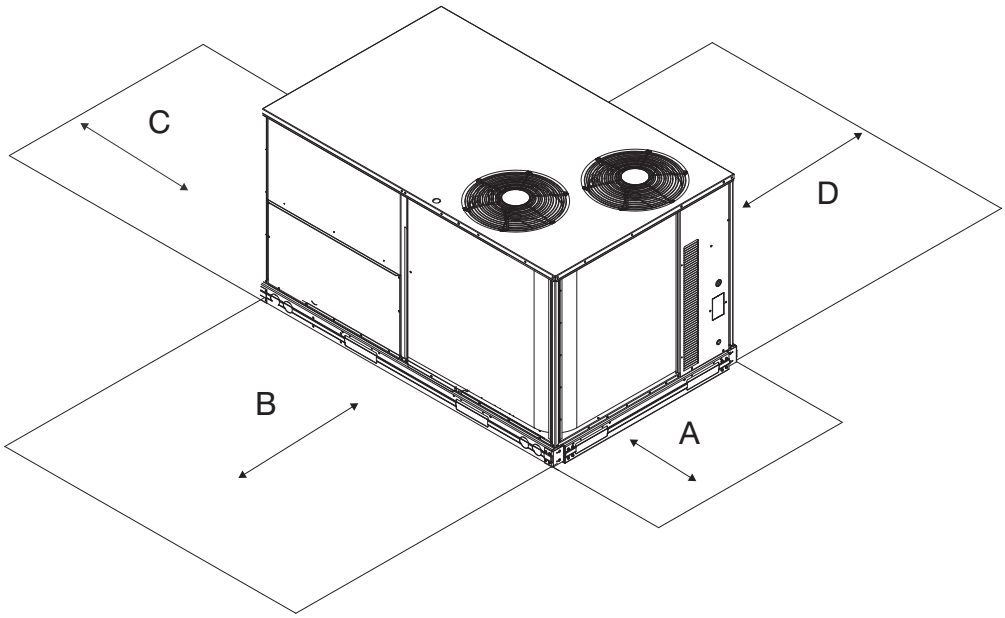

C11247

Fig. 7 - Service Clearance

LOCATION	DIMENSION	CONDITION
A	48 – in. (1219 mm)	Unit disconnect is mounted on panel
	18 – in. (457 mm)	No disconnect, convenience outlet option
	18 – in. (457 mm)	Recommended service clearance
	12 – in. (305 mm)	Minimum clearance
B	42 – in. (1067 mm)	Surface behind servicer is grounded (e.g., metal, masonry wall)
	36 – in. (914 mm)	Surface behind servicer is electrically non – conductive (e.g., wood, fiberglass)
	Special	Check for sources of flue products within 10 – ft of unit fresh air intake hood
C	36 – in. (914 mm)	Side condensate drain is used
	18 – in. (457 mm)	Minimum clearance
D	42 – in. (1067 mm)	Surface behind servicer is grounded (e.g., metal, masonry wall, another unit)
	36 – in. (914 mm)	Surface behind servicer is electrically non – conductive (e.g., wood, fiberglass)

NOTE: Unit not designed to have overhead obstruction. Contact Application Engineering for guidance on any application planning overhead obstruction or for vertical clearances.

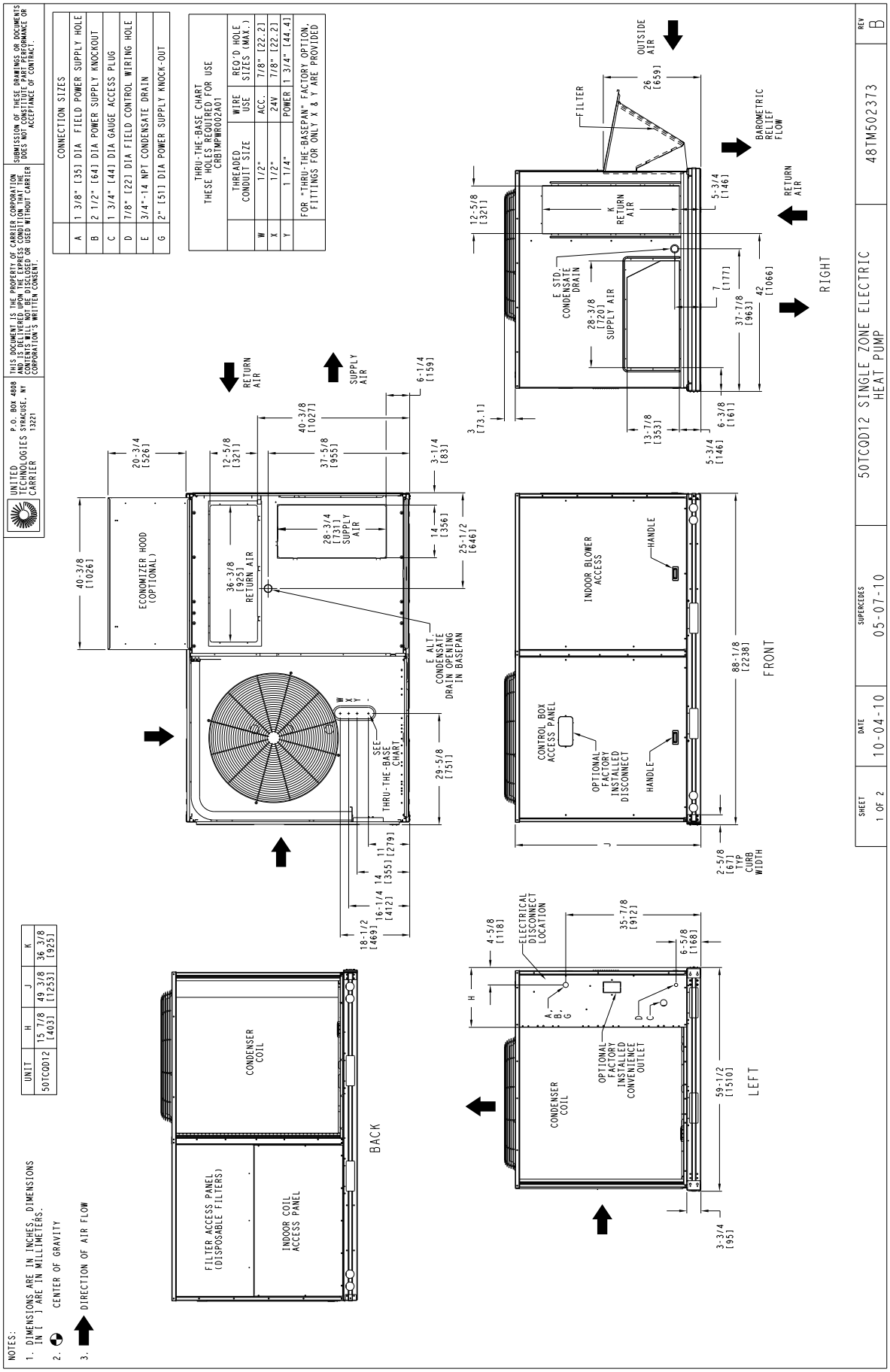

C12042

Fig. 8 – Dimensions 50TCQ 12

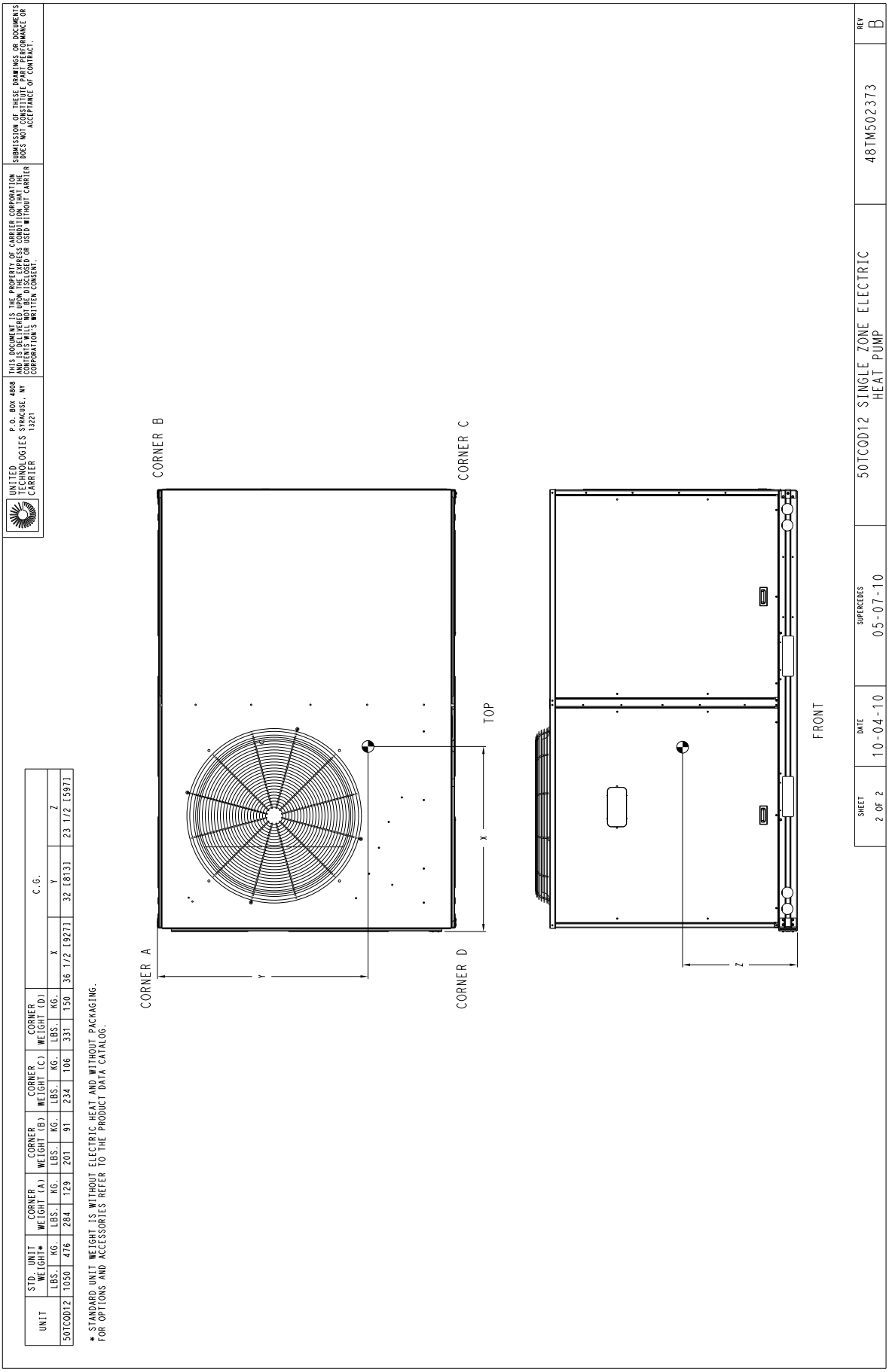

UNIT	STD. UNIT WEIGHT*		CORNER WEIGHT (A)		CORNER WEIGHT (B)		CORNER WEIGHT (C)		CORNER WEIGHT (D)		C.G.		
	LBS.	KG.	LBS.	KG.	LBS.	KG.	LBS.	KG.	LBS.	KG.	X	Y	Z
50TCQD12	1050	476	284	129	201	91	234	106	331	150	36 1/2 [927]	32 [813]	23 1/2 [597]

* STANDARD UNIT WEIGHT IS WITHOUT ELECTRIC HEAT AND WITHOUT PACKAGING. FOR OPTIONS AND ACCESSORIES REFER TO THE PRODUCT DATA CATALOG.

C12043

Fig. 9 - Dimensions 50TCQ 12

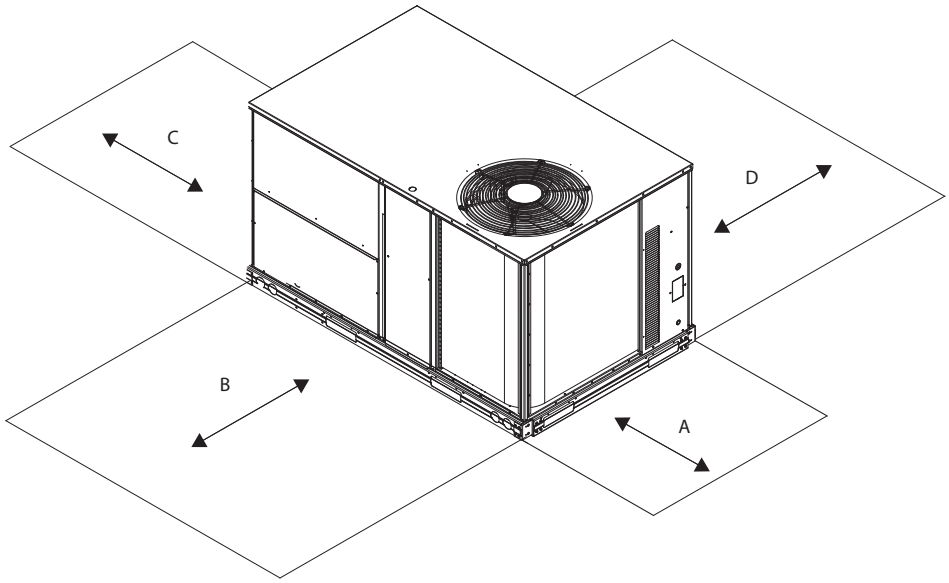

C08337

Fig. 10 - Service Clearance

LOCATION	DIMENSION	CONDITION
A	48 – in. (1219 mm)	Unit disconnect is mounted on panel
	18 – in. (457 mm)	No disconnect, convenience outlet option
	18 – in. (457 mm)	Recommended service clearance
	12 – in. (305 mm)	Minimum clearance
B	42 – in. (1067 mm)	Surface behind servicer is grounded (e.g., metal, masonry wall)
	36 – in. (914 mm)	Surface behind servicer is electrically non – conductive (e.g., wood, fiberglass)
	Special	Check for sources of flue products within 10 – ft of unit fresh air intake hood
C	36 – in. (914 mm)	Side condensate drain is used
	18 – in. (457 mm)	Minimum clearance
D	42 – in. (1067 mm)	Surface behind servicer is grounded (e.g., metal, masonry wall, another unit)
	36 – in. (914 mm)	Surface behind servicer is electrically non – conductive (e.g., wood, fiberglass)

NOTE: Unit not designed to have overhead obstruction. Contact Application Engineering for guidance on any application planning overhead obstruction or for vertical clearances.

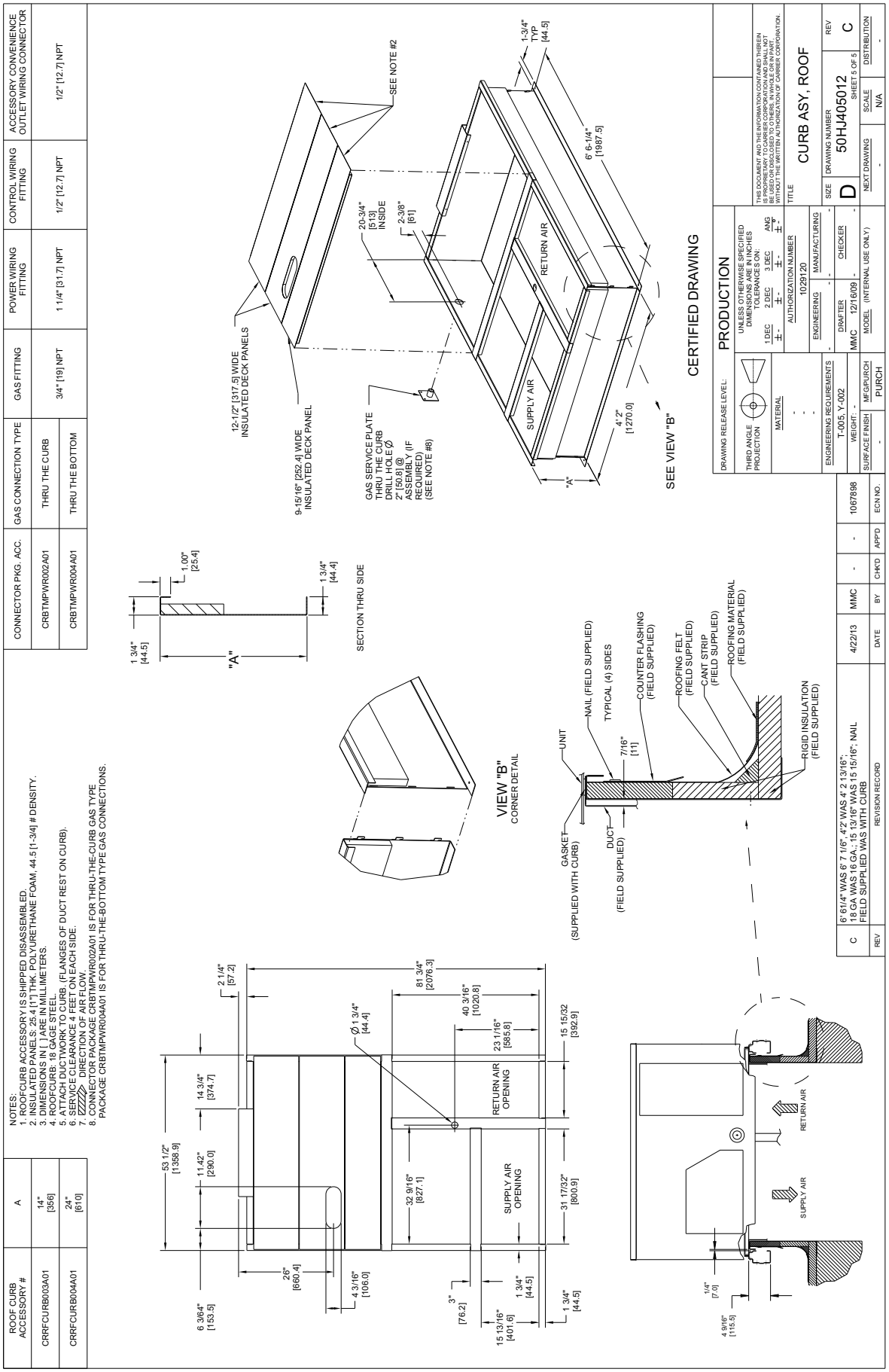

ROOF CURB ACCESSORY #	A
CRRFCURB003A01	14" [356]
CRRFCURB004A01	24" [610]

CONNECTOR PKG. ACC.	GAS CONNECTION TYPE	GAS FITTING	POWER WIRING FITTING	CONTROL WIRING FITTING	ACCESSORY CONVENIENCE OUTLET WIRING CONNECTOR
CRBTMPWR002A01	THRU THE CURB	3/4" [19] NPT	1 1/4" [31.7] NPT	1/2" [12.7] NPT	1/2" [12.7] NPT
CRBTMPWR004A01	THRU THE BOTTOM				

Fig. 11 - Curb Dimensions 50TCQ 08-12

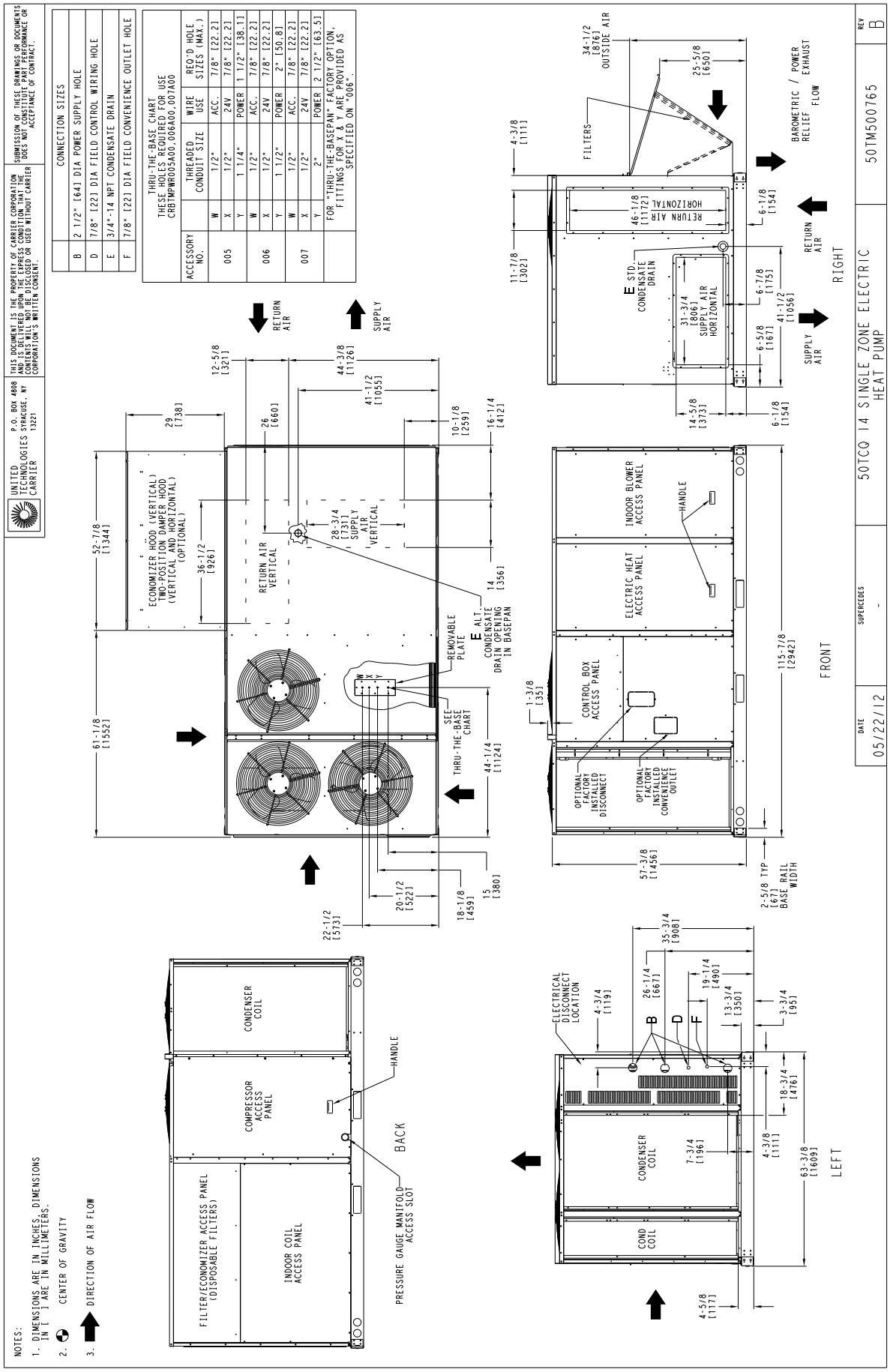

C14192

Fig. 12 – Dimensions 50TCQ 14

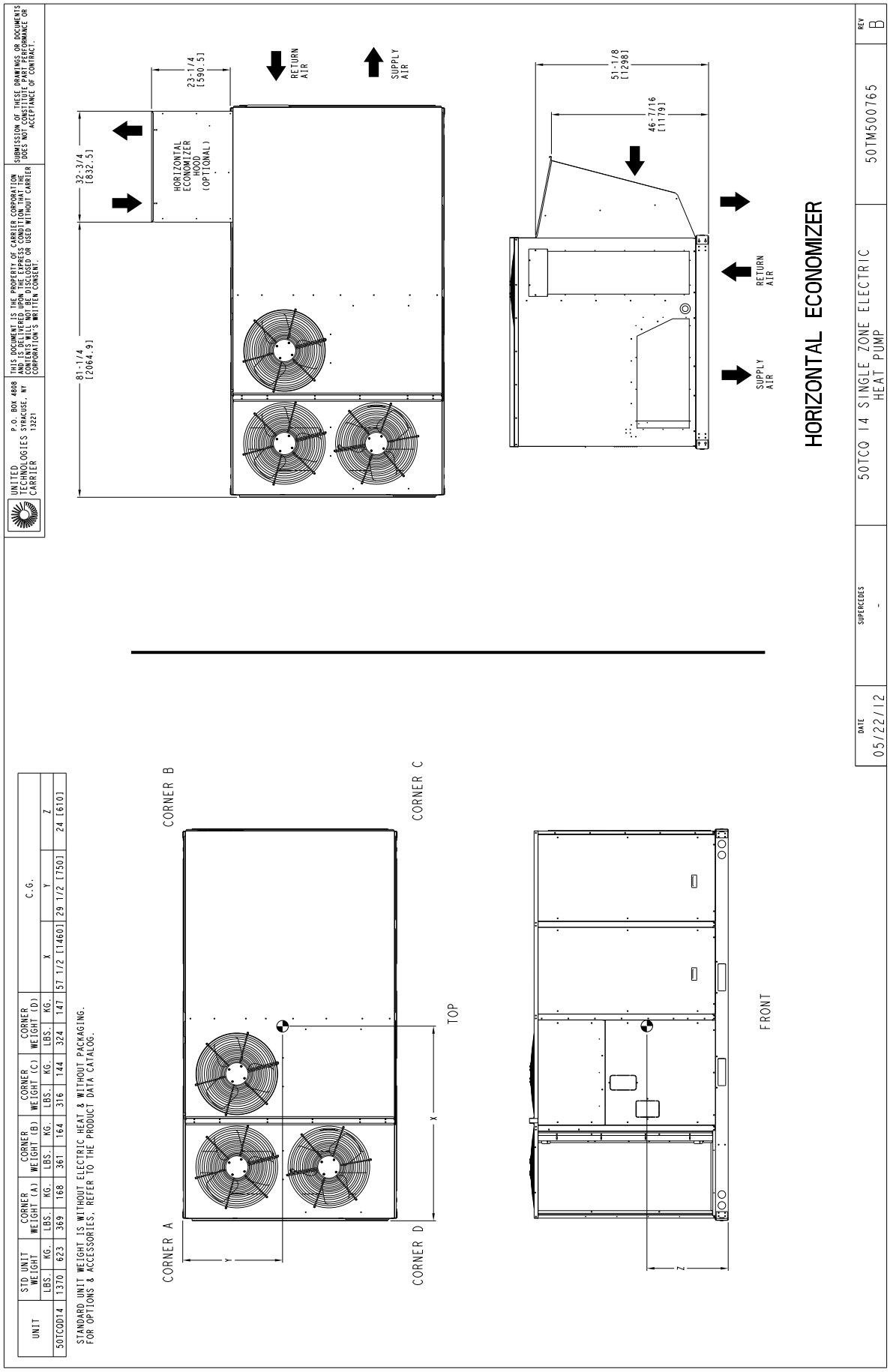

UNIT	STD UNIT WEIGHT		CORNER WEIGHT (A)		CORNER WEIGHT (B)		CORNER WEIGHT (C)		CORNER WEIGHT (D)		C.G.		
	LBS.	KG.	LBS.	KG.	LBS.	KG.	LBS.	KG.	LBS.	KG.	X	Y	Z
50TCQD14	1370	623	369	168	361	164	316	144	324	147	57 1/2 [1460]	29 1/2 [750]	24 [610]

STANDARD UNIT WEIGHT IS WITHOUT ELECTRIC HEAT & WITHOUT PACKAGING.
FOR OPTIONS & ACCESSORIES, REFER TO THE PRODUCT DATA CATALOG.

C14193

Fig. 13 – Dimensions 50TCQ 14

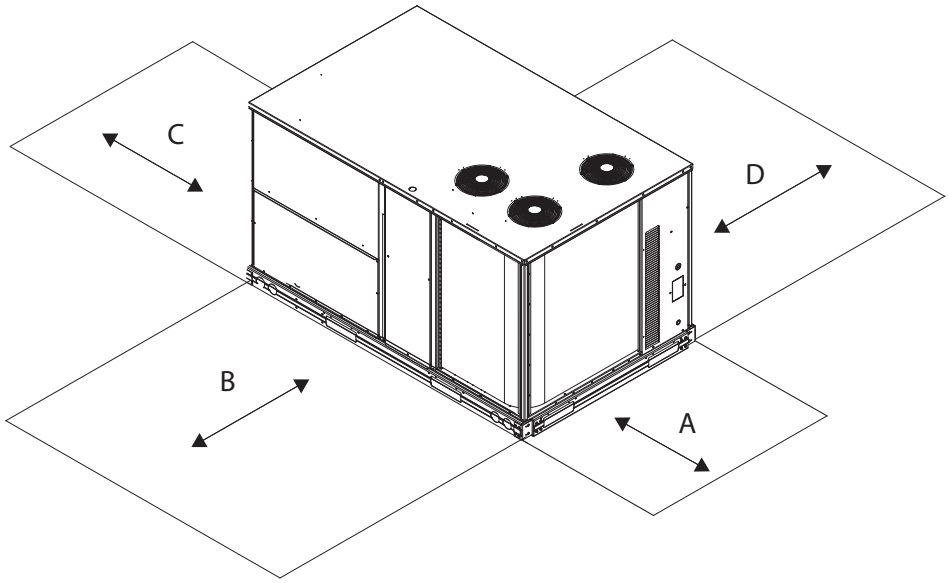

C10578B

Fig. 14 - Service Clearance

LOCATION	DIMENSION	CONDITION
A	48 – in. (1219 mm)	Unit disconnect is mounted on panel
	18 – in. (457 mm)	No disconnect, convenience outlet option
	18 – in. (457 mm)	Recommended service clearance
	12 – in. (305 mm)	Minimum clearance
B	42 – in. (1067 mm)	Surface behind servicer is grounded (e.g., metal, masonry wall)
	36 – in. (914 mm)	Surface behind servicer is electrically non – conductive (e.g., wood, fiberglass)
	Special	Check for sources of flue products within 10 – ft of unit fresh air intake hood
C	36 – in. (914 mm)	Side condensate drain is used
	18 – in. (457 mm)	Minimum clearance
D	42 – in. (1067 mm)	Surface behind servicer is grounded (e.g., metal, masonry wall, another unit)
	36 – in. (914 mm)	Surface behind servicer is electrically non – conductive (e.g., wood, fiberglass)

NOTE: Unit not designed to have overhead obstruction. Contact Application Engineering for guidance on any application planning overhead obstruction or for vertical clearances.

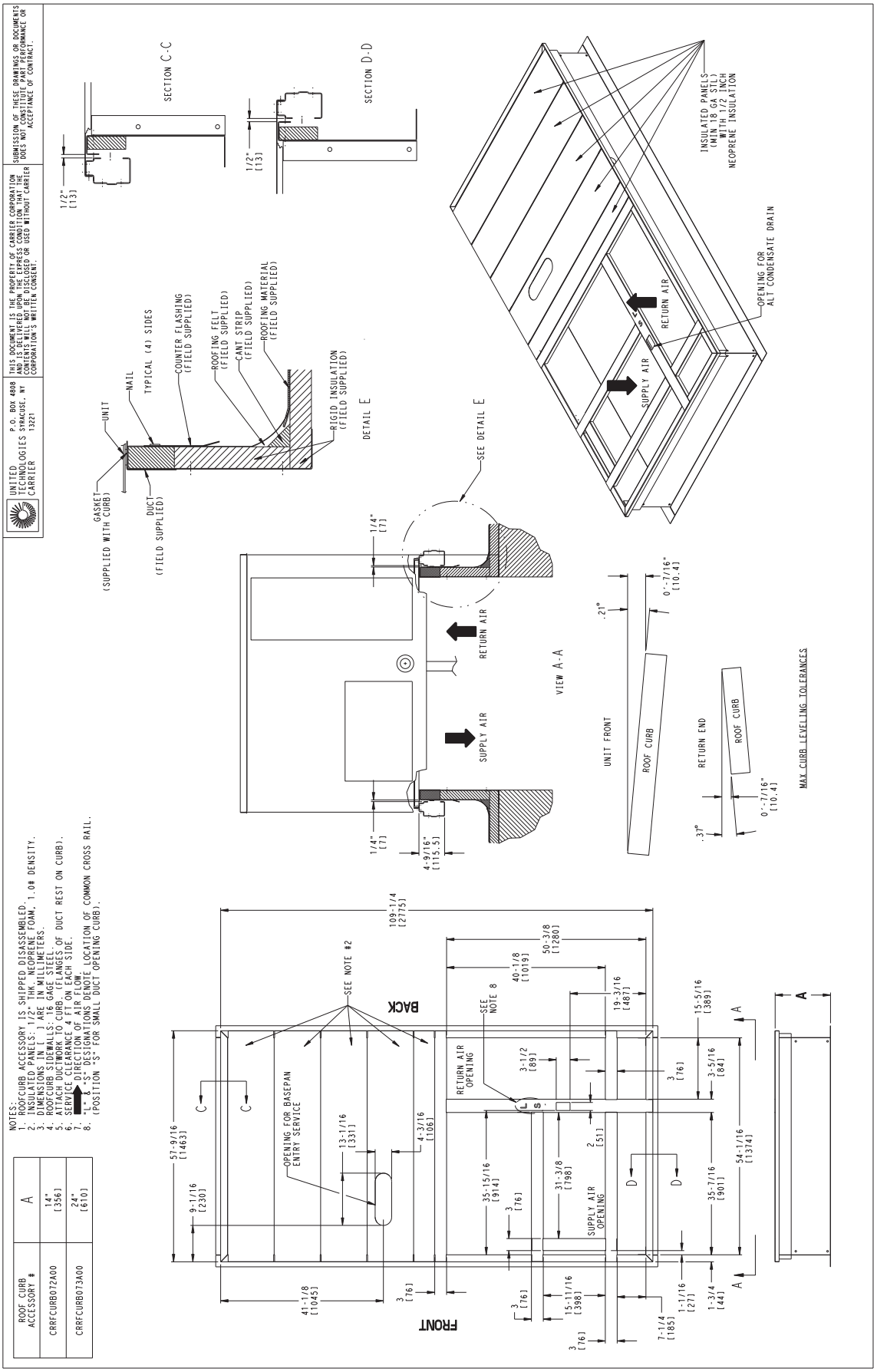

C10365

Fig. 15 - Curb Dimensions 50TCQ 14

OPTION / ACCESSORY WEIGHTS

OPTION / ACCESSORY	OPTION / ACCESSORY WEIGHTS									
	07		08		09		12		14	
	lb	kg	lb	kg	lb	kg	lb	kg	lb	kg
Power Exhaust – vertical	50	23	75	34	75	34	75	34	85	39
Power Exhaust – horizontal	30	14	30	14	30	14	30	14	75	34
EconoMi$er (IV, X or 2)	50	23	75	34	75	34	75	34	115	52
Two Position damper	39	18	58	26	58	26	58	26	65	29
Manual Dampers	12	5	18	8	18	8	18	8	25	11
Hail Guard (louvered)	16	7	34	15	34	15	34	15	45	20
Cu/Cu Condenser Coil	95	43	95	43	95	43	170	77	190	86
Cu/Cu Cond. and Evaporator Coils	165	75	140	64	195	88	270	122	280	127
Roof Curb (14–in. curb)	115	52	143	65	143	65	143	65	180	82
Roof Curb (24–in. curb)	197	89	245	111	245	111	245	111	255	116
CO_2 sensor	5	2	5	2	5	2	5	2	5	2
Electric Heater	30	14	45	20	45	20	45	20	25	11
Single Point Kit	10	5	12	5	12	5	12	5	25	11
Optional Indoor Motor / Drive	10	5	15	7	15	7	15	7	45	20
Motormaster Controller	35	16	35	16	35	16	35	16	35	16
Return Smoke Detector	5	2	5	2	5	2	5	2	5	2
Supply Smoke Detector	5	2	5	2	5	2	5	2	5	2
Non–Fused Disconnect	15	7	15	7	15	7	15	7	15	7
Powered Convenience outlet	35	16	35	16	35	16	35	16	35	16
Non–Powered Convenience outlet	5	2	5	2	5	2	5	2	4	2
Enthalpy Sensor	2	1	2	1	2	1	2	1	2	1
Differential Enthalpy Sensor	3	1	3	1	3	1	3	1	3	1
SAV System with VFD	–	–	20	9	20	9	20	9	20	9

NOTE: Where multiple variations are available, the heaviest combination is listed.
– Not Available

APPLICATION DATA

Min operating ambient temp (cooling):

In mechanical cooling mode, your Carrier rooftop can safely operate down to an outdoor ambient temperature of 25°F (-4°C). It is possible to provide cooling at lower outdoor ambient temperatures by using less outside air, economizers, and/or accessory low ambient kits.

Max operating ambient temp (cooling):

The maximum operating ambient temperature for cooling mode is 115°F (46°C). While cooling operation above 115°F (46°C) may be possible, it could cause either a reduction in performance, reliability, or a protective action by the unit's internal safety devices.

Min and max airflow (cooling mode):

To maintain safe and reliable operation of your rooftop, operate within the cooling airflow limits. Operating above the max may cause blow-off, undesired airflow noise, or airflow related problems with the rooftop unit. Operating below the min may cause problems with coil freeze-up.

Airflow:

All units are draw-though in cooling mode.

Outdoor air application strategies:

Economizers reduce operating expenses and compressor run time by providing a free source of cooling and a means of ventilation to match application changing needs. In fact, they should be considered for most applications. Also, consider the various economizer control methods and their benefits, as well as sensors required to accomplish your application goals. Please contact your local Carrier representative for assistance.

Motor limits, Brake horsepower (BHP):

Due to Carrier's internal unit design, air path, and specially designed motors, the full horsepower (maximum continuous BHP) band, as listed in this manual, can be used with the utmost confidence. There is no need for extra safety factors, as Carrier's motors are designed and rigorously tested to use the entire, listed BHP range without either nuisance tripping or premature motor failure.

Sizing a rooftop

Bigger isn't necessarily better. While an air conditioner needs to have enough capacity to meet the load, it doesn't need excess capacity. In fact, having excess capacity typically results in very poor part load performance and humidity control.

Using higher design temperatures than ASHRAE recommends for your location, adding "safety factors" to the calculated load, and rounding up to the next largest unit, are all signs of oversizing air conditioners. Oversizing can cause short-cycling, and short cycling leads to poor humidity control, reduced efficiency, higher utility bills, drastic indoor temperature swings, excessive noise, and increased wear and tear on the air conditioner.

Rather than oversizing an air conditioner, wise contractors and engineers "right-size" or even slightly undersize air conditioners. Correctly sizing an air conditioner controls humidity better; promotes efficiency; reduces utility bills; extends equipment life, and maintains even, comfortable temperatures.

Low ambient applications

When equipped with a Carrier economizer, your rooftop unit can cool your space by bringing in fresh, cool outside air. In fact, when so equipped, accessory low ambient kit may not be necessary. In low ambient conditions, unless the outdoor air is excessively humid or contaminated, economizer-based "free cooling" is the preferred less costly and energy conscious method.

In low ambient applications where outside air might not be desired (such as contaminated or excessively humid outdoor environments), your Carrier rooftop can operate at ambient temperatures down to -20°F (-29°C) using the recommended accessory Motormaster® low ambient controller.

50TCQ - Staged Air Volume (SAV) - Variable Frequency Drive (VFD) HP Rating

UNIT SIZE	VOLTAGE	STATIC OPTION	VFD HP RATING
07	208/230, 460, 575	STD	3
	208/230, 460	MED	3
	575	MED	5
	208/230	HIGH	3
	460, 575	HIGH	5
08	208/230, 460, 575	STD	3
	208/230, 460	MED	3
	575	MED	5
	208/230, 460	HIGH	3
	575	HIGH	5
09	208/230, 460, 575	STD	3
	208/230, 460	MED	3
	575	MED	5
	208/230, 460	HIGH	3
	575	HIGH	5
12	208/230, 460, 575	STD	3
	208/230, 460, 575	MED	5
	208/230, 460, 575	HIGH	7.5
14	208/230, 460	STD	3
	575	STD	5
	208/230, 460	MED	3
	575	MED	5
	208/230, 460, 575	HIGH	7.5

Table 18 – COOLING CAPACITIES 1-STAGE COOLING 6 TONS

50TCQA07				AMBIENT TEMPERATURE											
				85			95			105			115		
				EAT (db)			EAT (db)			EAT (db)			EAT (db)		
				75	80	85	75	80	85	75	80	85	75	80	85
1800 Cfm	EAT (wb)	58	TC	61.1	61.1	68.9	58.3	58.3	66.1	55.2	55.2	63.2	51.8	51.8	59.9
			SHC	53.3	61.1	68.9	50.4	58.3	66.1	47.2	55.2	63.2	43.7	51.8	59.9
		62	TC	64.1	64.1	65.2	60.5	60.5	63.6	56.5	56.5	61.8	52.1	52.1	59.7
			SHC	49.6	57.4	65.2	47.8	55.7	63.6	45.8	53.8	61.8	43.4	51.6	59.7
		67	TC	70.8	70.8	70.8	67.2	67.2	67.2	63.1	63.1	63.1	58.6	58.6	58.6
			SHC	40.7	48.5	56.3	39.1	47.0	54.9	37.3	45.3	53.3	35.3	43.5	51.7
		72	TC	77.4	77.4	77.4	73.7	73.7	73.7	69.5	69.5	69.5	64.9	64.9	64.9
			SHC	31.1	38.9	46.7	29.6	37.5	45.5	27.9	36.0	44.0	26.0	34.2	42.5
		76	TC	–	82.0	82.0	–	78.4	78.4	–	73.9	73.9	–	68.8	68.8
			SHC	–	30.9	38.8	–	29.7	37.6	–	28.1	36.2	–	26.4	34.6
2100 Cfm	EAT (wb)	58	TC	64.6	64.6	73.7	61.6	61.6	70.8	58.4	58.4	67.7	54.8	54.8	64.3
			SHC	55.5	64.6	73.7	52.5	61.6	70.8	49.1	58.4	67.7	45.3	54.8	64.3
		62	TC	66.1	66.1	71.7	62.5	62.5	69.9	58.5	58.5	67.8	54.9	54.9	64.4
			SHC	53.4	62.5	71.7	51.5	60.7	69.9	49.2	58.5	67.8	45.3	54.9	64.4
		67	TC	72.8	72.8	72.8	69.0	69.0	69.0	64.8	64.8	64.8	60.2	60.2	60.2
			SHC	43.1	52.2	61.3	41.5	50.7	59.9	39.7	49.1	58.4	37.7	47.3	56.8
		72	TC	79.2	79.2	79.2	75.4	75.4	75.4	71.0	71.0	71.0	66.2	66.2	66.2
			SHC	31.9	41.1	50.2	30.5	39.7	49.0	28.7	38.1	47.5	26.7	36.3	45.9
		76	TC	–	83.1	83.1	–	79.8	79.8	–	75.1	75.1	–	69.7	69.7
			SHC	–	32.0	41.2	–	30.7	39.9	–	29.1	38.5	–	27.3	36.9
2400 Cfm	EAT (wb)	58	TC	67.4	67.4	77.8	64.4	64.4	74.9	61.0	61.0	71.7	57.3	57.3	68.2
			SHC	57.0	67.4	77.8	53.9	64.4	74.9	50.3	61.0	71.7	46.4	57.3	68.2
		62	TC	67.8	67.8	77.4	64.4	64.4	74.9	61.0	61.0	71.7	57.3	57.3	68.3
			SHC	56.5	66.9	77.4	53.9	64.4	74.9	50.3	61.0	71.7	46.4	57.3	68.3
		67	TC	74.3	74.3	74.3	70.4	70.4	70.4	66.1	66.1	66.1	61.4	61.4	61.7
			SHC	45.3	55.7	66.1	43.7	54.2	64.7	41.9	52.6	63.3	39.9	50.8	61.7
		72	TC	80.4	80.4	80.4	76.6	76.6	76.6	72.1	72.1	72.1	67.1	67.1	67.1
			SHC	32.6	43.0	53.4	31.2	41.7	52.3	29.3	40.1	50.8	27.2	38.2	49.2
		76	TC	–	84.0	84.0	–	80.7	80.7	–	76.0	76.0	–	70.4	70.4
			SHC	–	32.6	43.1	–	31.6	42.2	–	30.0	40.8	–	28.1	39.1
2700 Cfm	EAT (wb)	58	TC	69.7	69.7	81.5	66.6	66.6	78.5	63.1	63.1	75.2	59.3	59.3	71.6
			SHC	58.0	69.7	81.5	54.8	66.6	78.5	51.1	63.1	75.2	47.0	59.3	71.6
		62	TC	69.8	69.8	81.5	66.6	66.6	78.4	63.2	63.2	75.2	59.4	59.4	71.7
			SHC	58.0	69.8	81.5	54.8	66.6	78.4	51.2	63.2	75.2	47.1	59.4	71.7
		67	TC	75.4	75.4	75.4	71.4	71.4	71.4	67.1	67.1	67.9	62.3	62.3	66.4
			SHC	47.2	59.0	70.7	45.7	57.6	69.4	43.9	55.9	67.9	41.8	54.1	66.4
		72	TC	81.3	81.3	81.3	77.5	77.5	77.5	72.9	72.9	72.9	67.8	67.8	67.8
			SHC	33.0	44.8	56.5	31.7	43.6	55.5	29.8	41.9	54.0	27.7	40.0	52.4
		76	TC	–	84.9	84.9	–	81.3	81.3	–	76.6	76.6	–	70.8	70.8
			SHC	–	33.4	45.2	–	33.0	44.9	–	30.8	43.0	–	28.8	41.3
3000 Cfm	EAT (wb)	58	TC	71.7	71.7	84.7	68.5	68.5	81.7	64.9	64.9	78.3	61.0	61.0	74.7
			SHC	58.7	71.7	84.7	55.4	68.5	81.7	51.6	64.9	78.3	47.3	61.0	74.7
		62	TC	71.7	71.7	84.8	68.6	68.6	81.7	65.0	65.0	78.3	61.0	61.0	74.7
			SHC	58.7	71.7	84.8	55.4	68.6	81.7	51.6	65.0	78.3	47.4	61.0	74.7
		67	TC	76.4	76.4	76.4	72.3	72.3	73.8	67.9	67.9	72.4	63.0	63.0	70.8
			SHC	49.0	62.1	75.1	47.5	60.7	73.8	45.7	59	72.4	43.4	57.1	70.8
		72	TC	82.0	82.0	82.0	78.2	78.2	78.2	73.5	73.5	73.5	68.2	68.2	68.2
			SHC	33.4	46.5	59.5	32.1	45.3	58.5	30.2	43.6	57.1	28.0	41.7	55.5
		76	TC	–	85.5	85.5	–	81.8	81.8	–	77.1	77.1	–	71.3	71.3
			SHC	–	34.2	47.2	–	33.0	46.3	–	31.6	45.1	–	29.5	43.3

LEGEND

– – Do not operate in this region
Cfm – Cubic feet per minute (supply air)
EAT(db) – Entering air temperature (dry bulb)
EAT(wb) – Entering air temperature (wet bulb)
SHC – Sensible heat capacity (1000 Btuh) Gross
TC – Total capacity (1000 Btuh) Gross

Table 19 – COOLING CAPACITIES 2-STAGE COOLING 7.5 TONS

50TCQD08				AMBIENT TEMPERATURE											
				85			95			105			115		
				EAT (db)			EAT (db)			EAT (db)			EAT (db)		
				75	80	85	75	80	85	75	80	85	75	80	85
2250Cfm	EAT (wb)	58	TC	77.4	77.4	87.8	74.1	74.1	84.1	69.8	69.8	79.2	65.2	65.2	74.1
			SHC	66.9	77.4	87.8	64.0	74.1	84.1	60.3	69.8	79.2	56.4	65.2	74.1
		62	TC	81.8	81.8	83.7	77.2	77.2	81.4	71.9	71.9	78.9	66.6	66.6	75.9
			SHC	60.6	72.1	83.7	58.4	69.9	81.4	55.9	67.4	78.9	53.2	64.5	75.9
		67	TC	90.6	90.6	90.6	86.0	86.0	86.0	80.8	80.8	80.8	75.1	75.1	75.1
			SHC	50.4	62.0	73.5	48.4	60.0	71.6	46.2	57.8	69.3	43.9	55.4	67.0
		72	TC	99.4	99.4	99.4	94.7	94.7	94.7	89.5	89.5	89.5	83.8	83.8	83.8
			SHC	39.6	51.3	62.9	37.7	49.4	61.0	35.8	47.4	59.0	33.6	45.2	56.8
		76	TC	–	105.7	105.7	–	100.8	100.8	–	95.5	95.5	–	89.7	89.7
			SHC	–	42.1	54.5	–	40.4	52.8	–	38.6	50.9	–	36.5	48.8
2625 Cfm	EAT (wb)	58	TC	81.8	81.8	92.8	78.0	78.0	88.6	74.1	74.1	84.2	69.5	69.5	78.9
			SHC	70.7	81.8	92.8	67.5	78.0	88.6	64.1	74.1	84.2	60.1	69.5	78.9
		62	TC	84.7	84.7	91.7	79.9	79.9	89.2	75.2	75.2	86.2	69.8	69.8	81.6
			SHC	65.2	78.5	91.7	62.9	76.1	89.2	60.3	73.3	86.2	56.8	69.2	81.6
		67	TC	93.4	93.4	93.4	88.6	88.6	88.6	83.2	83.2	83.2	77.4	77.4	77.4
			SHC	53.4	66.7	80.1	51.4	64.7	78.1	49.2	62.5	75.9	46.8	60.2	73.5
		72	TC	101.9	101.9	101.9	97.1	97.1	97.1	91.8	91.8	91.8	86.0	86.0	86.0
			SHC	40.8	54.1	67.5	38.9	52.3	65.6	36.9	50.3	63.6	34.8	48.1	61.5
		76	TC	–	107.7	107.7	–	102.6	102.6	–	97.2	97.2	–	91.2	91.2
			SHC	–	43.7	58.1	–	41.9	56.0	–	39.9	53.9	–	37.9	51.6
3000 Cfm	EAT (wb)	58	TC	85.6	85.6	97.2	81.8	81.8	92.9	77.6	77.6	88.0	72.9	72.9	82.8
			SHC	74.1	85.6	97.2	70.7	81.8	92.9	67.1	77.6	88.0	63.0	72.9	82.8
		62	TC	87.0	87.0	98.9	82.5	82.5	95.4	78.0	78.0	90.5	73.3	73.3	85.6
			SHC	69.4	84.1	98.9	66.6	81.0	95.4	63.1	76.8	90.5	59.6	72.6	85.6
		67	TC	95.5	95.5	95.5	90.5	90.5	90.5	85.1	85.1	85.1	79.0	79.0	79.6
			SHC	56.1	71.2	86.2	54.1	69.2	84.2	51.9	67.0	82.1	49.5	64.6	79.6
		72	TC	103.8	103.8	103.8	98.8	98.8	98.8	93.4	93.4	93.4	87.5	87.5	87.5
			SHC	41.8	56.7	71.6	39.9	54.8	69.8	37.9	52.9	67.8	35.8	50.7	65.7
		76	TC	–	109.1	109.1	–	104.0	104.0	–	98.3	98.3	–	92.2	92.2
			SHC	–	44.9	60.6	–	43.1	58.6	–	41.1	56.4	–	39.0	54.2
3375 Cfm	EAT (wb)	58	TC	88.9	88.9	100.9	84.9	84.9	96.4	80.5	80.5	91.4	75.7	75.7	86.0
			SHC	76.9	88.9	100.9	73.4	84.9	96.4	69.6	80.5	91.4	65.5	75.7	86.0
		62	TC	89.6	89.6	103.8	85.1	85.1	100.4	81.0	81.0	94.1	75.8	75.8	89.5
			SHC	72.4	88.1	103.8	69.7	85.0	100.4	65.6	79.8	94.1	62.1	75.8	89.5
		67	TC	97.1	97.1	97.1	92.1	92.1	92.1	86.5	86.5	87.9	80.3	80.3	85.4
			SHC	58.7	75.3	92.0	56.7	73.4	90.1	54.5	71.2	87.9	52.0	68.7	85.4
		72	TC	105.2	105.2	105.2	100.0	100.0	100.0	94.5	94.5	94.5	88.5	88.5	88.5
			SHC	42.6	59.0	75.3	40.7	57.1	73.5	38.8	55.2	71.6	36.6	53.1	69.5
		76	TC	–	110.1	110.1	–	105.0	105.0	–	99.2	99.2	–	92.9	92.9
			SHC	–	45.9	62.8	–	44.1	60.9	–	42.1	58.7	–	40.0	56.4
3750 Cfm	EAT (wb)	58	TC	91.6	91.6	104.0	87.5	87.5	99.4	83.0	83.0	94.3	78.1	78.1	88.7
			SHC	79.2	91.6	104.0	75.7	87.5	99.4	71.8	83.0	94.3	67.6	78.1	88.7
		62	TC	91.7	91.7	108.3	87.7	87.7	103.5	83.1	83.1	98.1	78.2	78.2	92.3
			SHC	75.2	91.7	108.3	71.8	87.7	103.5	68.1	83.1	98.1	64.1	78.2	92.3
		67	TC	98.4	98.4	98.4	93.3	93.3	95.6	87.7	87.7	93.4	81.5	81.5	90.9
			SHC	61.1	79.3	97.5	59.1	77.3	95.6	56.9	75.2	93.4	54.5	72.7	90.9
		72	TC	106.2	106.2	106.2	101.0	101.0	101.0	95.4	95.4	95.4	89.3	89.3	89.3
			SHC	43.4	61.1	78.8	41.5	59.2	76.9	39.5	57.3	75.0	37.4	55.2	73.0
		76	TC	–	111.0	111.0	–	105.8	105.8	–	99.8	99.8	–	93.5	93.5
			SHC	–	46.8	64.9	–	45.1	63.1	–	43.0	60.8	–	40.9	58.4

LEGEND

– – Do not operate in this region
Cfm – Cubic feet per minute (supply air)
EAT(db) – Entering air temperature (dry bulb)
EAT(wb) – Entering air temperature (wet bulb)
SHC – Sensible heat capacity (1000 Btuh) Gross
TC – Total capacity (1000 Btuh) Gross

Table 20 – COOLING CAPACITIES 2-STAGE COOLING 8.5 TONS

50TCQD09				AMBIENT TEMPERATURE											
				85			95			105			115		
				EAT (db)			EAT (db)			EAT (db)			EAT (db)		
				75	80	85	75	80	85	75	80	85	75	80	85
2550 Cfm	EAT (wb)	58	TC	91.1	91.1	102.9	86.4	86.4	97.5	81.2	81.2	91.7	75.7	75.7	85.5
			SHC	79.4	91.1	102.9	75.2	86.4	97.5	70.8	81.2	91.7	66.0	75.7	85.5
		62	TC	96.0	96.0	99.4	89.2	89.2	96.4	83.0	83.0	93.4	76.5	76.5	88.0
			SHC	72.7	86.0	99.4	69.6	83.0	96.4	66.7	80.0	93.4	62.4	75.2	88.0
		67	TC	106.4	106.4	106.4	100.4	100.4	100.4	92.9	92.9	92.9	86.0	86.0	86.0
			SHC	60.4	73.8	87.2	57.7	71.1	84.5	54.7	68.1	81.6	51.8	65.2	78.6
		72	TC	117.3	117.3	117.3	111.2	111.2	111.2	104.3	104.3	104.3	97.0	97.0	97.0
			SHC	47.4	60.9	74.4	45.1	58.5	72.0	42.4	55.9	69.4	39.7	53.1	66.6
		76	TC	–	126.1	126.1	–	119.9	119.9	–	113.0	113.0	–	105.6	105.6
			SHC	–	50.3	64.3	–	48.0	61.8	–	45.6	59.4	–	43.0	56.7
2975 Cfm	EAT (wb)	58	TC	96.5	96.5	109.0	91.7	91.7	103.5	86.7	86.7	97.9	80.5	80.5	90.9
			SHC	84.1	96.5	109.0	79.9	91.7	103.5	75.5	86.7	97.9	70.1	80.5	90.9
		62	TC	98.2	98.2	109.0	92.9	92.9	105.4	87.0	87.0	100.5	80.6	80.6	94.5
			SHC	78.1	93.6	109.0	75.1	90.2	105.4	71.3	85.9	100.5	66.7	80.6	94.5
		67	TC	109.5	109.5	109.5	103.0	103.0	103.0	96.3	96.3	96.3	87.6	87.6	87.6
			SHC	64.1	79.6	95.2	61.4	76.9	92.5	58.7	74.3	89.8	55.3	70.9	86.5
		72	TC	120.6	120.6	120.6	114.2	114.2	114.2	107.3	107.3	107.3	99.5	99.5	99.5
			SHC	49.1	64.7	80.3	46.7	62.3	77.9	44.1	59.7	75.3	41.3	56.9	72.5
		76	TC	–	129.2	129.2	–	122.9	122.9	–	115.7	115.7	–	108.1	108.1
			SHC	–	52.3	68.4	–	50.0	65.8	–	47.6	63.5	–	45.0	60.8
3400 Cfm	EAT (wb)	58	TC	101.0	101.0	114.0	96.7	96.7	109.1	90.9	90.9	102.6	84.9	84.9	95.8
			SHC	88.0	101.0	114.0	84.2	96.7	109.1	79.2	90.9	102.6	74.0	84.9	95.8
		62	TC	102.3	102.3	116.5	96.9	96.9	112.5	90.7	90.7	106.3	84.6	84.6	99.1
			SHC	82.9	99.7	116.5	79.7	96.1	112.5	75.1	90.7	106.3	70.0	84.6	99.1
		67	TC	112.1	112.1	112.1	105.5	105.5	105.5	98.4	98.4	98.4	90.8	90.8	94.2
			SHC	67.7	85.3	102.9	65.1	82.7	100.2	62.2	79.8	97.3	59.2	76.7	94.2
		72	TC	123.0	123.0	123.0	116.5	116.5	116.5	109.4	109.4	109.4	101.6	101.6	101.6
			SHC	50.5	68.2	85.9	48.2	65.8	83.5	45.6	63.2	80.8	42.8	60.4	78.1
		76	TC	–	131.5	131.5	–	124.9	124.9	–	117.7	117.7	–	109.9	109.9
			SHC	–	54.1	72.1	–	51.8	69.7	–	49.4	67.2	–	46.8	64.6
3825 Cfm	EAT (wb)	58	TC	104.5	104.5	118.0	99.8	99.8	112.6	94.4	94.4	106.6	87.9	87.9	99.2
			SHC	91.1	104.5	118.0	86.9	99.8	112.6	82.3	94.4	106.6	76.6	87.9	99.2
		62	TC	105.0	105.0	123.0	100.3	100.3	117.5	93.4	93.4	109.5	87.3	87.3	102.3
			SHC	86.9	105.0	123.0	83.0	100.3	117.5	77.4	93.4	109.5	72.3	87.3	102.3
		67	TC	114.1	114.1	114.1	107.4	107.4	107.6	99.4	99.4	104.6	92.0	92.0	101.3
			SHC	71.2	90.8	110.4	68.5	88.1	107.6	65.4	85.0	104.6	62.4	81.9	101.3
		72	TC	124.9	124.9	124.9	118.2	118.2	118.2	111.0	111.0	111.0	103.1	103.1	103.1
			SHC	51.9	71.5	91.1	49.5	69.1	88.7	47.0	66.6	86.2	44.2	63.8	83.4
		76	TC	–	133.3	133.3	–	126.5	126.5	–	119.2	119.2	–	111.2	111.2
			SHC	–	55.7	75.6	–	53.5	73.3	–	51.1	70.8	–	48.5	68.1
4250 Cfm	EAT (wb)	58	TC	108.6	108.6	122.6	102.7	102.7	115.9	97.4	97.4	110.0	90.8	90.8	102.5
			SHC	94.6	108.6	122.6	89.5	102.7	115.9	84.9	97.4	110.0	79.1	90.8	102.5
		62	TC	109.0	109.0	126.4	103.4	103.4	121.2	97.5	97.5	114.2	91.3	91.3	106.9
			SHC	89.5	107.9	126.4	85.6	103.4	121.2	80.7	97.5	114.2	75.6	91.3	106.9
		67	TC	115.6	115.6	117.4	108.9	108.9	114.7	101.6	101.6	111.4	93.6	93.6	108.1
			SHC	74.3	95.9	117.4	71.7	93.2	114.7	68.7	90.1	111.4	65.6	86.8	108.1
		72	TC	126.4	126.4	126.4	119.7	119.7	119.7	112.3	112.3	112.3	104.2	104.2	104.2
			SHC	53.1	74.6	96.1	50.8	72.3	93.8	48.2	69.8	91.4	45.4	67.0	88.5
		76	TC	–	134.6	134.6	–	127.8	127.8	–	120.3	120.3	–	112.3	112.3
			SHC	–	57.2	78.8	–	55.0	76.6	–	52.6	74.1	–	50.0	71.5

LEGEND

– – Do not operate in this region
Cfm – Cubic feet per minute (supply air)
EAT(db) – Entering air temperature (dry bulb)
EAT(wb) – Entering air temperature (wet bulb)
SHC – Sensible heat capacity (1000 Btuh) Gross
TC – Total capacity (1000 Btuh) Gross

Table 21 – COOLING CAPACITIES 2-STAGE COOLING 10 TONS

50TCQD12				AMBIENT TEMPERATURE											
				85			95			105			115		
				EAT (db)			EAT (db)			EAT (db)			EAT (db)		
				75	80	85	75	80	85	75	80	85	75	80	85
3000 Cfm	EAT (wb)	58	TC	102.8	102.8	121.0	96.3	96.3	115.8	90.1	90.1	109.5	83.5	83.5	102.9
			SHC	82.1	101.5	121.0	76.8	96.3	115.8	70.6	90.1	109.5	64.0	83.5	102.9
		62	TC	108.0	108.0	114.3	100.4	100.4	111.1	92.1	92.1	107.1	84.2	84.2	102.0
			SHC	75.4	94.9	114.3	72.2	91.7	111.1	68.1	87.6	107.1	63.1	82.5	102.0
		67	TC	120.5	120.5	120.5	113.5	113.5	113.5	104.9	104.9	104.9	95.2	95.2	95.2
			SHC	60.2	79.7	99.2	57.7	77.2	96.7	54.4	73.9	93.4	50.8	70.3	89.7
		72	TC	132.8	132.8	132.8	126.5	126.5	126.5	118.6	118.6	118.6	109.3	109.3	109.3
			SHC	44.5	64.0	83.4	42.2	61.7	81.2	39.5	59.0	78.5	36.4	55.9	75.3
		76	TC	–	142.0	142.0	–	136.0	136.0	–	129.1	129.1	–	120.3	120.3
			SHC	–	50.9	70.4	–	48.8	68.2	–	46.6	66.0	–	43.7	63.2
3500 Cfm	EAT (wb)	58	TC	108.2	108.2	130.9	102.5	102.5	125.2	95.5	95.5	118.2	88.3	88.3	111.0
			SHC	85.5	108.2	130.9	79.8	102.5	125.2	72.8	95.5	118.2	65.6	88.3	111.0
		62	TC	111.4	111.4	125.8	104.6	104.6	122.1	96.3	96.3	117.0	88.7	88.7	110.7
			SHC	80.4	103.1	125.8	76.7	99.4	122.1	71.6	94.3	117.0	65.3	88.0	110.7
		67	TC	123.4	123.4	123.4	116.3	116.3	116.3	107.9	107.9	107.9	97.5	97.5	98.9
			SHC	62.6	85.3	108.0	60.1	82.9	105.6	57.2	79.9	102.6	53.5	76.2	98.9
		72	TC	135.4	135.4	135.4	129.2	129.2	129.2	121.2	121.2	121.2	112.0	112.0	112.0
			SHC	44.2	67.0	89.7	42.2	64.9	87.6	39.5	62.2	85.0	36.5	59.3	82.0
		76	TC	–	144.6	144.6	–	138.4	138.4	–	131.3	131.3	–	–	–
			SHC	–	51.9	74.6	–	50.0	72.7	–	47.8	70.5	–	–	–
4000 Cfm	EAT (wb)	58	TC	112.7	112.7	138.7	106.9	106.9	132.9	99.9	99.9	125.9	92.3	92.3	118.2
			SHC	86.7	112.7	138.7	81.0	106.9	132.9	74.0	99.9	125.9	66.3	92.3	118.2
		62	TC	114.0	114.0	135.3	107.6	107.6	131.3	100.4	100.4	125.5	92.3	92.3	118.3
			SHC	83.4	109.3	135.3	79.3	105.3	131.3	73.6	99.6	125.5	66.4	92.3	118.3
		67	TC	125.4	125.4	125.4	118.2	118.2	118.2	109.5	109.5	111.2	99.1	99.1	107.7
			SHC	64.5	90.5	116.4	62.2	88.1	114.1	59.3	85.3	111.2	55.8	81.8	107.7
		72	TC	137.2	137.2	137.2	130.7	130.7	130.7	122.8	122.8	122.8	113.5	113.5	113.5
			SHC	43.6	69.6	95.5	41.7	67.6	93.6	39.2	65.1	91.1	36.3	62.2	88.2
		76	TC	–	146.3	146.3	–	139.9	139.9	–	132.5	132.5	–	–	–
			SHC	–	52.8	78.7	–	50.8	76.8	–	48.6	74.6	–	–	–
4500 Cfm	EAT (wb)	58	TC	115.9	115.9	145.2	110.4	110.4	139.6	103.4	103.4	132.6	95.4	95.4	124.6
			SHC	86.7	115.9	145.2	81.2	110.4	139.6	74.2	103.4	132.6	66.2	95.4	124.6
		62	TC	116.6	116.6	143.2	110.4	110.4	139.4	103.9	103.9	131.8	95.4	95.4	124.6
			SHC	84.8	114.0	143.2	81.0	110.2	139.4	73.4	102.6	131.8	66.2	95.4	124.6
		67	TC	126.5	126.5	126.5	119.5	119.5	122.2	110.6	110.6	119.6	100.2	100.2	116.1
			SHC	65.9	95.1	124.3	63.8	93.0	122.2	61.2	90.4	119.6	57.7	86.9	116.1
		72	TC	138.0	138.0	138.0	131.5	131.5	131.5	123.9	123.9	123.9	114.2	114.2	114.2
			SHC	42.7	71.9	101.1	40.8	70.0	99.2	38.5	67.7	96.9	35.6	64.8	94.0
		76	TC	–	147.3	147.3	–	140.6	140.6	–	–	–	–	–	–
			SHC	–	53.3	82.6	–	51.4	80.6	–	–	–	–	–	–
5000 Cfm	EAT (wb)	58	TC	118.4	118.4	150.9	112.9	112.9	145.4	105.9	105.9	138.4	97.8	97.8	130.2
			SHC	86.0	118.4	150.9	80.5	112.9	145.4	73.5	105.9	138.4	65.3	97.8	130.2
		62	TC	118.5	118.5	150.7	113.5	113.5	144.5	106.0	106.0	138.4	97.9	97.9	130.3
			SHC	85.8	118.3	150.7	79.6	112.0	144.5	73.5	106.0	138.4	65.4	97.9	130.3
		67	TC	126.9	126.9	131.8	120.0	120.0	130.0	111.1	111.1	127.4	100.8	100.8	123.9
			SHC	66.9	99.4	131.8	65.1	97.5	130.0	62.5	94.9	127.4	59.0	91.4	123.9
		72	TC	138.4	138.4	138.4	131.6	131.6	131.6	124.0	124.0	124.0	114.2	114.2	114.2
			SHC	41.4	73.8	106.3	39.5	71.9	104.4	37.3	69.8	102.2	34.6	67.0	99.5
		76	TC	–	147.7	147.7	–	140.9	140.9	–	–	–	–	–	–
			SHC	–	53.6	86.1	–	51.7	84.2	–	–	–	–	–	–

LEGEND

– – Do not operate in this region
Cfm – Cubic feet per minute (supply air)
EAT(db) – Entering air temperature (dry bulb)
EAT(wb) – Entering air temperature (wet bulb)
SHC – Sensible heat capacity (1000 Btuh) Gross
TC – Total capacity (1000 Btuh) Gross

Table 22 – COOLING CAPACITIES 2-STAGE COOLING 12.5 TONS

50TCQD14				AMBIENT TEMPERATURE											
				85			95			105			115		
				EAT (db)			EAT (db)			EAT (db)			EAT (db)		
				75	80	85	75	80	85	75	80	85	75	80	85
3750 Cfm	EAT (wb)	58	TC	126.4	126.4	143.6	119.1	119.1	135.3	111.8	111.8	127.0	104.0	104.0	118.2
			SHC	109.2	126.4	143.6	102.9	119.1	135.3	96.5	111.8	127.0	89.8	104.0	118.2
		62	TC	134.5	134.5	138.4	124.7	124.7	133.4	114.9	114.9	128.1	105.8	105.8	120.8
			SHC	100.3	119.4	138.4	95.5	114.4	133.4	90.5	109.3	128.1	84.6	102.7	120.8
		67	TC	149.6	149.6	149.6	140.5	140.5	140.5	130.0	130.0	130.0	118.8	118.8	118.8
			SHC	83.5	102.5	121.4	79.8	98.9	118.1	75.4	94.6	113.7	70.8	89.9	109.1
		72	TC	161.4	161.4	161.4	155.2	155.2	155.2	146.4	146.4	146.4	135.7	135.7	135.7
			SHC	64.5	83.5	102.5	62.1	81.2	100.4	58.8	78.1	97.3	54.8	74.1	93.3
		76	TC	–	169.5	169.5	–	163.1	163.1	–	156.8	156.8	–	147.7	147.7
			SHC	–	68.1	88.7	–	65.7	86.2	–	63.4	83.7	–	60.3	80.3
4375 Cfm	EAT (wb)	58	TC	134.6	134.6	152.9	126.8	126.8	144.1	118.8	118.8	135.0	110.5	110.5	125.6
			SHC	116.3	134.6	152.9	109.6	126.8	144.1	102.7	118.8	135.0	95.5	110.5	125.6
		62	TC	139.9	139.9	151.3	130.0	130.0	145.7	120.7	120.7	138.1	111.2	111.2	130.1
			SHC	107.9	129.6	151.3	102.8	124.2	145.7	96.7	117.4	138.1	90.4	110.3	130.1
		67	TC	153.7	153.7	153.7	145.2	145.2	145.2	134.5	134.5	134.5	122.9	122.9	122.9
			SHC	87.9	109.4	131.0	84.8	106.8	128.8	80.6	102.6	124.7	75.8	97.9	120.0
		72	TC	164.6	164.6	164.6	158.2	158.2	158.2	150.5	150.5	150.5	139.9	139.9	139.9
			SHC	66.0	87.2	108.5	63.6	85.1	106.5	60.9	82.8	104.8	57.0	79.1	101.2
		76	TC	–	172.4	172.4	–	165.7	165.7	–	159.3	159.3	–	150.8	150.8
			SHC	–	70.2	93.5	–	67.8	91.0	–	65.7	88.8	–	62.8	85.8
5000 Cfm	EAT (wb)	58	TC	141.4	141.4	160.6	133.5	133.5	151.6	125.0	125.0	142.0	116.2	116.2	132.0
			SHC	122.1	141.4	160.6	115.3	133.5	151.6	108.0	125.0	142.0	100.4	116.2	132.0
		62	TC	144.4	144.4	162.1	135.4	135.4	155.1	125.9	125.9	147.1	116.4	116.4	137.6
			SHC	114.3	138.2	162.1	108.5	131.8	155.1	102.2	124.6	147.1	95.3	116.4	137.6
		67	TC	156.6	156.6	156.6	148.8	148.8	148.8	138.1	138.1	138.1	126.3	126.3	130.2
			SHC	91.7	115.6	139.5	89.3	113.9	138.6	85.3	110.2	135.0	80.6	105.4	130.2
		72	TC	167.0	167.0	167.0	160.5	160.5	160.5	153.3	153.3	153.3	142.9	142.9	142.9
			SHC	67.3	90.6	113.9	64.9	88.6	112.2	62.5	87.0	111.4	58.9	83.7	108.5
		76	TC	–	174.6	174.6	–	167.5	167.5	–	160.7	160.7	–	152.9	152.9
			SHC	–	72.2	98.1	–	69.8	95.6	–	67.4	92.9	–	64.8	90.2
5625 Cfm	EAT (wb)	58	TC	146.6	146.6	166.6	139.0	139.0	157.9	130.3	130.3	148.1	121.2	121.2	137.7
			SHC	126.6	146.6	166.6	120.0	139.0	157.9	112.6	130.3	148.1	104.7	121.2	137.7
		62	TC	148.4	148.4	169.8	139.9	139.9	163.3	130.5	130.5	154.3	121.3	121.3	143.4
			SHC	118.8	144.3	169.8	113.5	138.4	163.3	106.8	130.5	154.3	99.2	121.3	143.4
		67	TC	158.8	158.8	158.8	151.5	151.5	151.5	140.9	140.9	144.6	129.1	129.1	140.0
			SHC	95.1	121.2	147.3	93.3	120.4	147.4	89.6	117.1	144.6	85.0	112.5	140.0
		72	TC	168.9	168.9	168.9	162.1	162.1	162.1	155.3	155.3	155.3	145.1	145.1	145.1
			SHC	68.4	93.7	118.9	66.1	91.7	117.3	63.9	90.6	117.3	60.6	87.9	115.2
		76	TC	–	176.2	176.2	–	168.9	168.9	–	161.7	161.7	–	154.3	154.3
			SHC	–	73.9	101.8	–	71.3	98.8	–	68.8	96.1	–	66.6	94.1
6250 Cfm	EAT (wb)	58	TC	150.6	150.6	171.1	143.5	143.5	163.1	134.9	134.9	153.3	125.5	125.5	142.6
			SHC	130.0	150.6	171.1	123.9	143.5	163.1	116.5	134.9	153.3	108.4	125.5	142.6
		62	TC	151.4	151.4	176.1	143.7	143.7	169.9	135.1	135.1	159.7	125.6	125.6	148.5
			SHC	122.6	149.3	176.1	117.6	143.7	169.9	110.5	135.1	159.7	102.7	125.6	148.5
		67	TC	160.4	160.4	160.4	153.4	153.4	155.3	143.2	143.2	153.4	131.3	131.3	148.7
			SHC	98.2	126.4	154.5	96.8	126.0	155.3	93.6	123.5	153.4	88.9	118.8	148.7
		72	TC	170.3	170.3	170.3	163.4	163.4	163.4	156.7	156.7	156.7	146.8	146.8	146.8
			SHC	69.5	96.5	123.5	67.1	94.5	121.9	65.1	93.8	122.5	62.0	91.7	121.3
		76	TC	–	177.5	177.5	–	170.1	170.1	–	162.7	162.7	–	155.4	155.4
			SHC	–	75.2	104.7	–	72.6	101.8	–	70.2	99.2	–	68.2	97.7

LEGEND

– – Do not operate in this region
Cfm – Cubic feet per minute (supply air)
EAT(db) – Entering air temperature (dry bulb)
EAT(wb) – Entering air temperature (wet bulb)
SHC – Sensible heat capacity (1000 Btuh) Gross
TC – Total capacity (1000 Btuh) Gross

Table 23 – HEATING CAPACITY — 6 TONS

50TCQ07											
RETURN AIR (°F db)	CFM (STANDARD AIR)		TEMPERATURE AIR ENTERING OUTDOOR COIL (°F db AT 70% RH)								
			–10	0	10	17	30	40	47	50	60
55	1800	Capacity	20.9	28.1	35.9	40.7	51.7	61.3	67.6	70.2	79.3
		Int. Cap.	19.3	25.9	33.0	37.1	45.3	61.3	67.6	70.2	79.3
	2400	Capacity	22.4	29.8	37.3	42.8	54.2	63.8	70.1	72.8	82.0
		Int. Cap.	20.7	27.4	34.3	39.0	47.5	63.8	70.1	72.8	82.0
	3000	Capacity	25.2	31.5	39.0	44.6	56.7	65.9	71.9	74.5	83.3
		Int. Cap.	23.3	28.9	35.8	40.7	49.7	65.9	71.9	74.5	83.3
70	1800	Capacity	16.0	23.5	31.1	36.5	47.2	56.3	63.6	66.3	75.2
		Int. Cap.	14.8	21.6	28.5	33.3	41.4	56.3	63.6	66.3	75.2
	2400	Capacity	17.6	25.4	33.2	38.7	50.0	59.8	66.7	69.3	78.3
		Int. Cap.	16.3	23.4	30.5	35.3	43.8	59.8	66.7	69.3	78.3
	3000	Capacity	19.2	27.2	35.1	40.7	52.3	62.6	68.8	71.4	80.3
		Int. Cap.	17.7	25.0	32.3	37.1	45.8	62.6	68.8	71.4	80.3
80	1800	Capacity	12.2	19.8	27.6	33.1	43.7	52.6	59.6	62.9	72.1
		Int. Cap.	11.2	18.2	25.3	30.1	38.3	52.6	59.6	62.9	72.1
	2400	Capacity	13.6	21.7	29.8	35.5	46.7	56.1	63.8	66.6	75.5
		Int. Cap.	12.6	20.0	27.3	32.3	40.9	56.1	63.8	66.6	75.5
	3000	Capacity	15.3	23.5	31.8	37.6	49.1	58.9	66.4	69.0	77.8
		Int. Cap.	14.1	21.7	29.2	34.3	43.0	58.9	66.4	69.0	77.8

LEGEND
Capacity – Instantaneous Capacity (1000 Btuh) includes indoor fan motor heat @AHRI static conditions
Int. Cap. – Integrated Capacity is Instantaneous Capacity minus the effects of frost on the outdoor coil and the heat required to defrost
RH – Relative Humidity
db – Dry Bulb

Table 24 – HEATING CAPACITY — 7.5 TONS

50TCQD08											
RETURN AIR (°F db)	CFM (STANDARD AIR)		TEMPERATURE AIR ENTERING OUTDOOR COIL (°F db AT 70% RH)								
			–10	0	10	17	30	40	47	50	60
55	2250	Capacity			46.9	53.5	66.3	77.2	86.2	89.4	103.3
		Int. Cap.			43.1	48.7	58.1	77.2	86.2	89.4	103.3
	3000	Capacity					68.5	80.2	89.8	93.1	106.7
		Int. Cap.					60.0	80.2	89.8	93.1	106.7
	3750	Capacity				58.9	72.5	84.6	94.5	97.6	110.6
		Int. Cap.				53.7	63.5	84.6	94.5	97.6	110.6
70	2250	Capacity	25.9	34.6	43.6	50.2	62.7	73.0	81.4	84.5	98.0
		Int. Cap.	23.9	31.8	40.0	45.7	55.0	73.0	81.4	84.5	98.0
	3000	Capacity	27.4	36.2	45.5	52.2	65.1	75.9	85.0	88.2	102.1
		Int. Cap.	25.3	33.4	41.8	47.6	57.0	75.9	85.0	88.2	102.1
	3750	Capacity	31.0	40.0	49.3	56.1	69.1	80.4	89.8	93.2	106.5
		Int. Cap.	28.6	36.8	45.3	51.1	60.6	80.4	89.8	93.2	106.5
80	2250	Capacity	22.5	31.5	40.7	47.3	60.1	70.3	78.2	81.2	94.3
		Int. Cap.	20.8	29.0	37.3	43.1	52.6	70.3	78.2	81.2	94.3
	3000	Capacity	24.1	33.3	42.7	49.5	62.5	73.1	81.6	84.7	98.6
		Int. Cap.	22.3	30.6	39.2	45.2	54.8	73.1	81.6	84.7	98.6
	3750	Capacity	27.8	37.1	46.6	53.5	66.7	77.5	86.4	89.7	103.4
		Int. Cap.	25.7	34.1	42.8	48.8	58.4	77.5	86.4	89.7	103.4

▨ – Indicates operation not permissible

LEGEND
Capacity – Instantaneous Capacity (1000 Btuh) includes indoor fan motor heat @AHRI static conditions
Int. Cap. – Integrated Capacity is Instantaneous Capacity minus the effects of frost on the outdoor coil and the heat required to defrost
RH – Relative Humidity
Db – Dry Bulb

Table 25 – HEATING CAPACITY 8.5 TONS

50TCQD09											
RETURN AIR (°F db)	CFM (STANDARD AIR)		TEMPERATURE AIR ENTERING OUTDOOR COIL (°F db AT 70% RH)								
			–10	0	10	17	30	40	47	50	60
55	2550	Capacity	33.1	42.7	52.7	60.0	75.6	87.4	97.5	100.6	113.8
		Int. Cap.	30.7	39.3	48.3	54.7	66.2	87.4	97.5	100.6	113.8
	3400	Capacity	34.4	44.0	54.2	61.8	77.5	89.9	100.2	103.1	115.7
		Int. Cap.	31.8	40.5	49.8	56.4	67.9	89.9	100.2	103.1	115.7
	4250	Capacity	38.0	47.7	58.0	65.8	81.5	94.2	103.9	106.6	118.2
		Int. Cap.	35.2	43.9	53.2	60.0	71.4	94.2	103.9	106.6	118.2
70	2550	Capacity	29.0	38.6	48.6	55.9	70.7	83.5	93.1	96.2	109.5
		Int. Cap.	26.8	35.5	44.6	51.0	61.9	83.5	93.1	96.2	109.5
	3400	Capacity	30.3	40.2	50.4	58.0	73.5	86.1	96.5	99.2	111.9
		Int. Cap.	28.0	37.0	46.3	52.9	64.4	86.1	96.5	99.2	111.9
	4250	Capacity	34.0	44.0	54.4	62.1	77.8	90.5	100.5	103.3	115.2
		Int. Cap.	31.5	40.5	50.0	56.6	68.2	90.5	100.5	103.3	115.2
80	2550	Capacity	25.3	35.0	45.2	52.6	67.1	80.0	90.0	93.2	106.5
		Int. Cap.	23.4	32.2	41.5	48.0	58.8	80.0	90.0	93.2	106.5
	3400	Capacity	26.6	36.7	47.2	54.8	69.8	83.0	93.1	96.2	109.2
		Int. Cap.	24.6	33.8	43.3	50.0	61.2	83.0	93.1	96.2	109.2
	4250	Capacity	30.4	40.6	51.2	59.0	74.4	87.7	97.7	100.7	112.8
		Int. Cap.	28.1	37.4	47.0	53.8	65.1	87.7	97.7	100.7	112.8

LEGEND
Capacity – Instantaneous Capacity (1000 Btuh) includes indoor fan motor heat @AHRI static conditions
Int. Cap. – Integrated Capacity is Instantaneous Capacity minus the effects of frost on the outdoor coil and the heat required to defrost
RH – Relative Humidity
db – Dry Bulb

Table 26 – HEATING CAPACITY 10 TONS

50TCQD12											
RETURN AIR (°F db)	CFM (STANDARD AIR)		TEMPERATURE AIR ENTERING OUTDOOR COIL (°F db AT 70% RH)								
			–10	0	10	17	30	40	47	50	60
55	3000	Capacity	41.8	52.4	64.1	72.8	90.4	105.3	118.0	121.9	140.3
		Int. Cap.	38.7	48.2	58.8	66.3	79.2	105.3	118.0	121.9	140.3
	4000	Capacity	43.3	54.0	66.0	74.5	92.7	107.8	120.2	124.1	142.1
		Int. Cap.	40.0	49.7	60.6	68.0	81.2	107.8	120.2	124.1	142.1
	5000	Capacity	46.9	57.7	69.7	78.2	96.6	111.5	123.5	127.3	142.3
		Int. Cap.	43.3	53.1	64.0	71.3	84.6	111.5	123.5	127.3	142.3
70	3000	Capacity	37.4	48.2	59.7	68.5	86.2	100.6	113.0	117.1	135.3
		Int. Cap.	34.6	44.4	54.8	62.4	75.5	100.6	113.0	117.1	135.3
	4000	Capacity	39.0	49.9	61.6	70.7	88.5	103.3	115.9	119.8	137.6
		Int. Cap.	36.1	45.9	56.6	64.5	77.5	103.3	115.9	119.8	137.6
	5000	Capacity	42.6	53.7	65.5	74.8	92.5	107.5	119.6	123.4	140.6
		Int. Cap.	39.4	49.4	60.1	68.2	81.1	107.5	119.6	123.4	140.6
80	3000	Capacity	33.9	44.8	56.5	65.1	83.2	97.3	109.5	113.4	131.6
		Int. Cap.	31.4	41.3	51.8	59.3	72.9	97.3	109.5	113.4	131.6
	4000	Capacity	35.5	46.6	58.5	67.3	85.5	100.0	112.5	116.5	134.2
		Int. Cap.	32.8	42.9	53.7	61.4	75.0	100.0	112.5	116.5	134.2
	5000	Capacity	39.1	50.4	62.3	71.3	89.6	104.3	116.6	120.4	137.5
		Int. Cap.	36.2	46.4	57.2	65.0	78.5	104.3	116.6	120.4	137.5

LEGEND
Capacity – Instantaneous Capacity (1000 Btuh) includes indoor fan motor heat @AHRI static conditions
Int. Cap. – Integrated Capacity is Instantaneous Capacity minus the effects of frost on the outdoor coil and the heat required to defrost
RH – Relative Humidity
db – Dry Bulb

Table 27 – HEATING CAPACITY 12.5 TONS

50TCQD14											
RETURN AIR (°F dB)	CFM (STANDARD AIR)		TEMPERATURE AIR ENTERING OUTDOOR COIL (°F db AT 70% RH)								
			–10	0	10	17	30	40	47	50	60
55	3750	Capacity	33.7	47.5	69.8	83.1	109.3	131.7	149.7	155.6	180.1
		Int. Cap.	31.2	43.7	64.0	75.8	95.8	131.7	149.7	155.6	180.1
	5000	Capacity	35.7	49.7	72.4	85.8	112.9	136.1	152.9	158.1	178.7
		Int. Cap.	33.0	45.7	66.5	78.2	99.0	136.1	152.9	158.1	178.7
	6250	Capacity	38.9	53.0	76.2	89.5	117.1	139.4	153.5	158.0	175.6
		Int. Cap.	36.0	48.8	70.0	81.6	102.6	139.4	153.5	158.0	175.6
70	3750	Capacity	24.4	38.2	59.4	73.1	99.8	121.2	138.5	144.5	169.7
		Int. Cap.	22.6	35.2	54.5	66.7	87.4	121.2	138.5	144.5	169.7
	5000	Capacity	26.4	40.4	62.1	76.6	103.2	125.4	143.0	148.6	170.3
		Int. Cap.	24.4	37.2	57.0	69.8	90.4	125.4	143.0	148.6	170.3
	6250	Capacity	29.6	43.8	65.9	80.7	107.3	129.8	145.5	150.4	169.1
		Int. Cap.	27.3	40.3	60.5	73.6	94.0	129.8	145.5	150.4	169.1
80	3750	Capacity	17.5	31.4	52.6	65.6	93.3	114.2	131.1	137.0	162.4
		Int. Cap.	16.2	28.9	48.3	59.8	81.8	114.2	131.1	137.0	162.4
	5000	Capacity	19.3	33.4	55.2	68.7	96.6	118.2	135.7	141.5	164.0
		Int. Cap.	17.8	30.8	50.7	62.6	84.6	118.2	135.7	141.5	164.0
	6250	Capacity	22.4	40.3	58.8	72.7	100.6	122.6	139.3	144.3	163.8
		Int. Cap.	20.7	37.1	54.0	66.3	88.2	122.6	139.3	144.3	163.8

LEGEND

Capacity – Instantaneous Capacity (1000 Btuh) includes indoor fan motor heat @AHRI static conditions

Int. Cap. – Integrated Capacity is Instantaneous Capacity minus the effects of frost on the outdoor coil and the heat required to defrost

RH – Relative Humidity

db – Dry Bulb

Table 28 – STATIC PRESSURE ADDERS (FACTORY OPTIONS AND/OR ACCESSORIES)

Economizer

6 TONS										
CFM (in. wg)	**900**	**1100**	**1300**	**1500**	**1700**	**1900**	**2100**	**2300**	**2500**	**3000**
Vertical Economizer	0.02	0.04	0.05	0.07	0.08	0.10	0.13	0.15	0.18	0.26
Horizontal Economizer	0.03	0.04	0.06	0.07	0.09	0.11	0.14	0.16	0.19	0.27

7.5 – 10 TONS										
CFM (in. wg)	**2000**	**2500**	**3000**	**3500**	**4000**	**4500**	**5000**	**5500**	**6000**	**6250**
Vertical Economizer	0.04	0.07	0.11	0.15	0.20	0.26	0.33	0.40	0.48	0.52
Horizontal Economizer	0.07	0.11	0.15	0.21	0.27	0.34	0.42	0.51	0.61	0.66

12.5 TONS										
CFM (in. wg)	**2250**	**3250**	**3500**	**3750**	**4000**	**4500**	**5000**	**5500**	**6000**	**6250**
Vertical Economizer	0.01	0.01	0.02	0.02	0.02	0.03	0.04	0.04	0.05	0.06
Horizontal Economizer	0.04	0.08	0.09	0.10	0.12	0.15	0.19	0.23	0.27	0.29

Electric Heaters

6 TONS										
CFM (in. wg)	**600**	**900**	**1200**	**1400**	**1600**	**1800**	**2000**	**2200**	**2400**	**2600**
1 Electric Heater Module	0.03	0.05	0.07	0.09	0.09	0.10	0.11	0.11	0.12	0.13
2 Electric Heater Modules	0.13	0.15	0.16	0.16	0.16	0.17	0.17	0.17	0.18	0.18

7.5 – 10 TONS																
CFM (in. wg)	**2250**	**2500**	**2750**	**3000**	**3250**	**3500**	**3750**	**4000**	**4250**	**4500**	**4750**	**5000**	**5250**	**5500**	**5750**	**6000**
1 Electric Heater Module	0.03	0.04	0.04	0.05	0.06	0.07	0.08	0.09	0.10	0.11	0.12	0.13	0.14	0.15	0.16	0.18
2 Electric Heater Modules	0.04	0.05	0.05	0.06	0.07	0.08	0.09	0.10	0.11	0.12	0.13	0.15	0.16	0.17	0.19	0.20

12.5 TONS												
CFM (in. wg)	**2813**	**3125**	**3438**	**3750**	**4063**	**4375**	**4688**	**5000**	**5313**	**5625**	**5938**	**6250**
Vertical – 1 Electric Heater Module	0.01	0.01	0.02	0.02	0.02	0.02	0.02	0.03	0.03	0.03	0.03	0.04
Vertical – 2 Electric Heater Modules	0.02	0.03	0.03	0.03	0.04	0.04	0.05	0.05	0.06	0.06	0.07	0.08
Horizontal – 1 Electric Heater Module	0.03	0.03	0.04	0.04	0.05	0.05	0.06	0.06	0.07	0.07	0.08	0.09
Horizontal – 2 Electric Heater Modules	0.02	0.03	0.03	0.04	0.04	0.04	0.05	0.05	0.06	0.06	0.07	0.08

ECONOMIZER, BAROMETRIC RELIEF AND PE PERFORMANCE

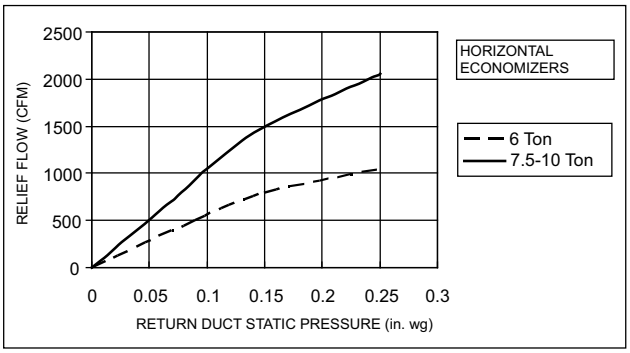

a50–9833

Fig. 16 - Barometric Relief Flow Capacity

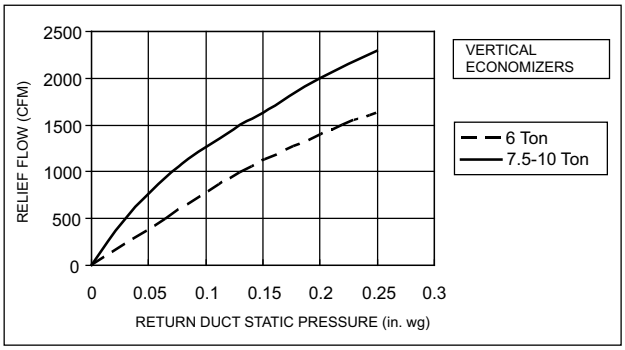

a50–9834

Fig. 20 - Barometric Relief Flow Capacity

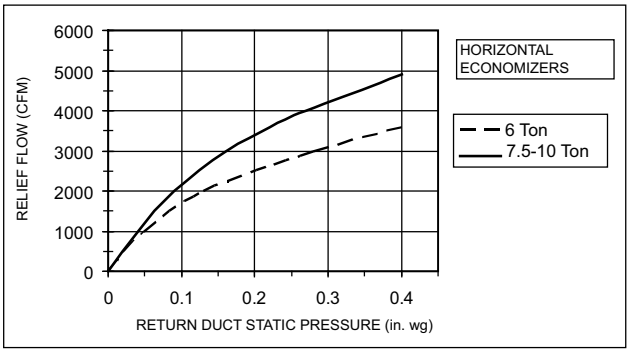

a50–9835

Fig. 17 - Return Air Pressure Drop

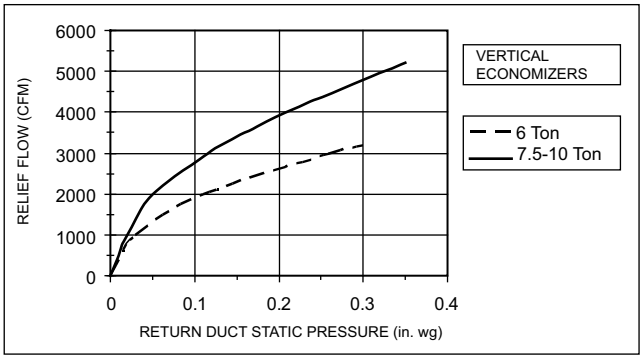

a50–9836

Fig. 21 - Return Air Pressure Drop

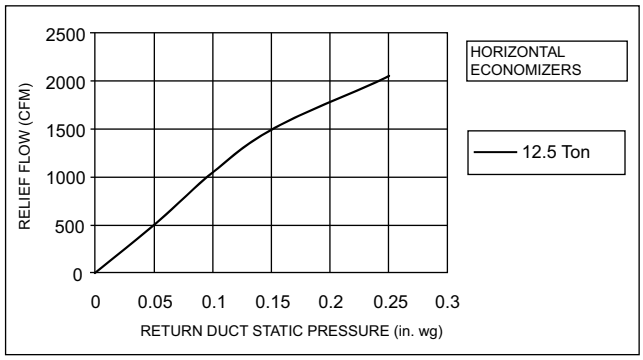

A50–9847

Fig. 18 - Barometric Relief Flow Capacity

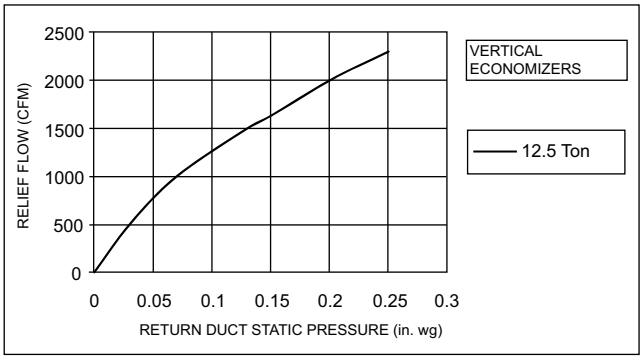

A50–9848

Fig. 22 - Barometric Relief Flow Capacity

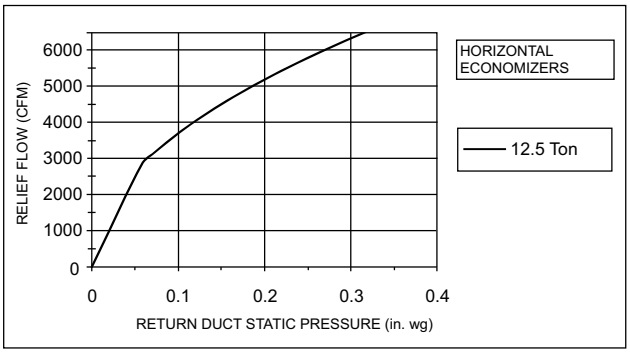

A50–9849

Fig. 19 - Return Air Pressure Drop

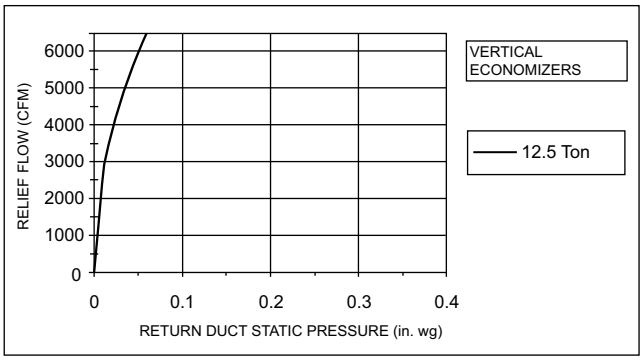

A50–9850

Fig. 23 - Return Air Pressure Drop

FAN PERFORMANCE

GENERAL FAN PERFORMANCE NOTES

1. Interpolation is permissible. Do not extrapolate.
2. External static pressure is the static pressure difference between the return duct and the supply duct plus the static pressure caused by any FIOPs or accessories.
3. Tabular data accounts for pressure loss due to clean filters, unit casing, and wet coils. Factory options and accessories may add static pressure losses, as shown in Table 28. Selection software is available, through your salesperson, to help you select the best motor/drive combination for your application.
4. The Fan Performance tables offer motor/drive recommendations. In cases when two motor/drive combinations would work, Carrier recommended the lower horsepower option.
5. For information on the electrical properties of Carrier motors, please see the Electrical information section of this book.
6. For more information on the performance limits of Carrier motors, see the application data section of this book.

FAN PERFORMANCE (cont)

Table 29 – 50TCQA07 **6 TON HORIZONTAL SUPPLY**

CFM	AVAILABLE EXTERNAL STATIC PRESSURE (IN. WG)									
	0.2		0.4		0.6		0.8		1.0	
	RPM	BHP	RPM	BHP	RPM	BHP	RPM	BHP	RPM	BHP
1800	822	0.51	927	0.66	1018	0.82	1100	0.98	1174	1.15
1950	872	0.62	973	0.79	1061	0.95	1140	1.13	1213	1.31
2100	923	0.75	1019	0.92	1104	1.10	1182	1.29	1253	1.48
2250	974	0.90	1067	1.08	1149	1.27	1224	1.46	1294	1.66
2400	1026	1.06	1115	1.26	1195	1.46	1268	1.66	1336	1.87
2550	1079	1.25	1164	1.46	1241	1.67	1312	1.88	1379	2.10
2700	1132	1.46	1214	1.67	1289	1.90	1358	2.12	1422	2.35
2850	1186	1.69	1264	1.92	1336	2.15	1404	2.39	1467	2.63
3000	1240	1.94	1315	2.18	1385	2.43	1451	2.68	1512	2.93

CFM	AVAILABLE EXTERNAL STATIC PRESSURE (IN. WG)									
	1.2		1.4		1.6		1.8		2.0	
	RPM	BHP	RPM	BHP	RPM	BHP	RPM	BHP	RPM	BHP
1800	1244	1.33	1308	1.51	1369	1.70	1427	1.90	1483	2.10
1950	1281	1.49	1345	1.68	1405	1.88	1462	2.09	1517	2.30
2100	1320	1.67	1382	1.87	1441	2.08	1498	2.29	–	–
2250	1359	1.87	1420	2.08	1479	2.29	1534	2.51	–	–
2400	1400	2.09	1460	2.31	1517	2.53	–	–	–	–
2550	1441	2.33	1500	2.55	–	–	–	–	–	–
2700	1483	2.59	1541	2.83	–	–	–	–	–	–
2850	1527	2.87	–	–	–	–	–	–	–	–
3000	–	–	–	–	–	–	–	–	–	–

Std static – 878–1192 RPM, Max BHP 1.5
Med static – 1066–1380 RPM, Max BHP 2.9
High static – 1208–1550 RPM, Max BHP 2.9

Table 30 – 50TCQA07 **6 TON VERTICAL SUPPLY**

CFM	AVAILABLE EXTERNAL STATIC PRESSURE (IN. WG)									
	0.2		0.4		0.6		0.8		1.0	
	RPM	BHP	RPM	BHP	RPM	BHP	RPM	BHP	RPM	BHP
1800	907	0.63	1006	0.80	1092	0.97	1169	1.14	1239	1.32
1950	965	0.77	1060	0.95	1143	1.13	1218	1.32	1287	1.51
2100	1024	0.93	1115	1.12	1195	1.32	1268	1.52	1335	1.72
2250	1083	1.11	1170	1.32	1248	1.53	1319	1.74	1385	1.96
2400	1143	1.32	1227	1.54	1302	1.76	1371	1.99	1435	2.22
2550	1203	1.55	1284	1.78	1357	2.02	1424	2.26	1487	2.50
2700	1264	1.81	1342	2.06	1412	2.31	1478	2.56	1539	2.82
2850	1326	2.09	1400	2.36	1469	2.62	1532	2.89	–	–
3000	1387	2.41	1459	2.69	–	–	–	–	–	–

CFM	AVAILABLE EXTERNAL STATIC PRESSURE (IN. WG)									
	1.2		1.4		1.6		1.8		2.0	
	RPM	BHP	RPM	BHP	RPM	BHP	RPM	BHP	RPM	BHP
1800	1304	1.51	1365	1.69	1422	1.88	1477	2.08	1528	2.28
1950	1350	1.71	1410	1.91	1467	2.11	1520	2.31	–	–
2100	1398	1.93	1457	2.14	1512	2.35	–	–	–	–
2250	1446	2.18	1504	2.40	–	–	–	–	–	–
2400	1496	2.45	–	–	–	–	–	–	–	–
2550	1546	2.75	–	–	–	–	–	–	–	–
2700	–	–	–	–	–	–	–	–	–	–
2850	–	–	–	–	–	–	–	–	–	–
3000	–	–	–	–	–	–	–	–	–	–

Std static – 878–1192 RPM, Max BHP 1.5
Med static – 1066–1380 RPM, Max BHP 2.9
High static – 1208–1639 RPM, Max BHP 2.9

FAN PERFORMANCE (cont)

Table 31 – 50TCQD08 **7.5 TON HORIZONTAL SUPPLY**

CFM	AVAILABLE EXTERNAL STATIC PRESSURE (IN. WG)									
	0.2		0.4		0.6		0.8		1.0	
	RPM	BHP	RPM	BHP	RPM	BHP	RPM	BHP	RPM	BHP
2250	423	0.28	509	0.40	587	0.52	659	0.66	725	0.80
2438	444	0.34	525	0.46	600	0.59	669	0.73	733	0.88
2625	465	0.40	543	0.53	614	0.67	680	0.82	743	0.97
2813	487	0.47	561	0.61	629	0.76	693	0.91	753	1.08
3000	510	0.55	580	0.70	646	0.86	707	1.02	765	1.19
3188	534	0.65	600	0.80	663	0.96	722	1.13	779	1.31
3375	557	0.75	621	0.91	681	1.08	738	1.26	793	1.44
3563	582	0.86	642	1.03	700	1.21	755	1.39	808	1.58
3750	606	0.99	664	1.17	720	1.35	773	1.54	824	1.74

CFM	AVAILABLE EXTERNAL STATIC PRESSURE (IN. WG)									
	1.2		1.4		1.6		1.8		2.0	
	RPM	BHP	RPM	BHP	RPM	BHP	RPM	BHP	RPM	BHP
2250	788	0.94	847	1.09	903	1.25	957	1.41	1009	1.58
2438	794	1.03	852	1.19	907	1.36	959	1.52	1010	1.70
2625	802	1.13	858	1.30	911	1.47	963	1.64	1012	1.82
2813	811	1.24	865	1.41	917	1.59	967	1.77	1016	1.96
3000	821	1.36	874	1.54	925	1.72	974	1.91	1021	2.11
3188	832	1.49	884	1.68	933	1.87	981	2.06	1028	2.26
3375	845	1.63	895	1.82	943	2.02	990	2.22	1035	2.43
3563	858	1.78	907	1.98	954	2.19	1000	2.40	1044	2.61
3750	873	1.94	920	2.15	966	2.36	1011	2.58	1054	2.80

Std static – 460–652 RPM, Max BHP 1.2
Med static – 591–838 RPM, Max BHP 2.9
High static – 838–1084 RPM, Max BHP 2.9

Table 32 – 50TCQD08 **7.5 TON VERTICAL SUPPLY**

CFM	AVAILABLE EXTERNAL STATIC PRESSURE (IN. WG)									
	0.2		0.4		0.6		0.8		1.0	
	RPM	BHP	RPM	BHP	RPM	BHP	RPM	BHP	RPM	BHP
2250	447	0.31	528	0.43	597	0.54	658	0.66	713	0.78
2438	470	0.37	548	0.50	615	0.62	675	0.75	729	0.88
2625	494	0.45	569	0.58	634	0.71	692	0.85	745	0.99
2813	518	0.53	590	0.67	653	0.82	710	0.96	763	1.11
3000	543	0.62	612	0.77	673	0.93	729	1.08	780	1.24
3188	568	0.72	635	0.89	694	1.05	749	1.21	799	1.38
3375	593	0.84	658	1.01	716	1.19	769	1.36	818	1.53
3563	619	0.97	681	1.15	737	1.33	789	1.52	837	1.70
3750	645	1.11	705	1.30	760	1.49	810	1.68	857	1.88

CFM	AVAILABLE EXTERNAL STATIC PRESSURE (IN. WG)									
	1.2		1.4		1.6		1.8		2.0	
	RPM	BHP	RPM	BHP	RPM	BHP	RPM	BHP	RPM	BHP
2250	764	0.89	812	1.02	856	1.14	899	1.26	939	1.39
2438	779	1.00	826	1.13	870	1.26	912	1.40	952	1.53
2625	795	1.12	841	1.26	885	1.40	926	1.54	966	1.68
2813	811	1.25	857	1.40	900	1.55	941	1.69	980	1.84
3000	828	1.39	873	1.55	916	1.70	956	1.86	995	2.02
3188	846	1.54	890	1.71	932	1.87	972	2.04	1010	2.21
3375	864	1.70	907	1.88	949	2.05	988	2.23	1026	2.40
3563	882	1.88	925	2.06	966	2.25	1005	2.43	1042	2.62
3750	902	2.07	944	2.26	984	2.45	1022	2.65	1059	2.84

Std static – 460–652 RPM, Max BHP 1.2
Med static – 591–838 RPM, Max BHP 2.9
High static – 838–1084 RPM, Max BHP 2.9

FAN PERFORMANCE (cont)

Table 33 – 50TCQD09 **8.5 TON HORIZONTAL SUPPLY**

CFM	AVAILABLE EXTERNAL STATIC PRESSURE (IN. WG)									
	0.2		0.4		0.6		0.8		1.0	
	RPM	BHP	RPM	BHP	RPM	BHP	RPM	BHP	RPM	BHP
2550	468	0.39	546	0.52	618	0.66	684	0.80	747	0.96
2763	493	0.47	567	0.61	635	0.76	699	0.91	760	1.07
2975	520	0.57	589	0.72	654	0.87	716	1.03	774	1.20
3188	547	0.68	613	0.83	675	1.00	733	1.17	789	1.34
3400	575	0.80	637	0.96	696	1.14	752	1.31	806	1.50
3613	603	0.94	662	1.11	719	1.29	773	1.48	824	1.67
3825	631	1.09	688	1.27	742	1.46	794	1.66	843	1.86
4038	660	1.26	714	1.45	766	1.65	816	1.85	864	2.06
4250	689	1.45	741	1.65	790	1.86	838	2.07	885	2.29

CFM	AVAILABLE EXTERNAL STATIC PRESSURE (IN. WG)									
	1.2		1.4		1.6		1.8		2.0	
	RPM	BHP	RPM	BHP	RPM	BHP	RPM	BHP	RPM	BHP
2550	806	1.11	863	1.28	916	1.45	968	1.62	1018	1.80
2763	817	1.24	871	1.41	924	1.59	974	1.77	1022	1.95
2975	829	1.37	882	1.55	932	1.74	981	1.93	1028	2.12
3188	843	1.53	894	1.71	943	1.90	990	2.10	1036	2.30
3400	858	1.69	907	1.88	955	2.09	1001	2.29	1046	2.50
3613	874	1.87	922	2.07	968	2.28	1013	2.49	1057	2.71
3825	891	2.07	938	2.28	983	2.49	1027	2.71	–	–
4038	910	2.28	955	2.50	999	2.72	1041	2.95	–	–
4250	930	2.51	973	2.74	1015	2.97	1057	3.21	–	–

Std static – 460–652 RPM, Max BHP 1.2
Med static – 591–838 RPM, Max BHP 2.9
High static – 838–1084 RPM, Max BHP 2.9

Table 34 – 50TCQD09 **8.5 VERTICAL SUPPLY**

CFM	AVAILABLE EXTERNAL STATIC PRESSURE (IN. WG)									
	0.2		0.4		0.6		0.8		1.0	
	RPM	BHP	RPM	BHP	RPM	BHP	RPM	BHP	RPM	BHP
2550	495	0.43	570	0.56	634	0.70	693	0.83	746	0.96
2763	524	0.53	595	0.67	657	0.81	714	0.95	766	1.09
2975	552	0.63	620	0.79	681	0.94	736	1.09	787	1.24
3188	582	0.76	647	0.92	705	1.08	759	1.25	808	1.41
3400	611	0.89	674	1.07	730	1.24	782	1.42	831	1.59
3613	641	1.05	701	1.23	756	1.42	806	1.60	854	1.79
3825	672	1.22	729	1.42	782	1.61	831	1.81	877	2.00
4038	702	1.41	758	1.62	809	1.83	857	2.03	901	2.24
4250	733	1.62	787	1.84	836	2.06	883	2.28	926	2.49

CFM	AVAILABLE EXTERNAL STATIC PRESSURE (IN. WG)									
	1.2		1.4		1.6		1.8		2.0	
	RPM	BHP	RPM	BHP	RPM	BHP	RPM	BHP	RPM	BHP
2550	795	1.09	841	1.23	885	1.36	926	1.50	965	1.64
2763	814	1.24	859	1.38	902	1.53	943	1.68	982	1.82
2975	834	1.40	878	1.55	921	1.71	961	1.86	999	2.02
3188	855	1.57	898	1.74	940	1.90	979	2.07	1017	2.24
3400	876	1.76	919	1.94	960	2.12	998	2.29	1036	2.47
3613	898	1.97	940	2.16	980	2.34	1018	2.53	1055	2.72
3825	921	2.20	962	2.40	1001	2.59	1039	2.79	–	–
4038	944	2.45	984	2.65	1023	2.86	–	–	–	–
4250	968	2.71	–	–	–	–	–	–	–	–

Std static – 460–652 RPM, Max BHP 1.2
Med static – 591–838 RPM, Max BHP 2.9
High static – 838–1084 RPM, Max BHP 2.9

FAN PERFORMANCE (cont)

Table 35 – 50TCQD12 **10 TON HORIZONTAL SUPPLY**

CFM	AVAILABLE EXTERNAL STATIC PRESSURE (IN. WG)									
	0.2		0.4		0.6		0.8		1.0	
	RPM	BHP	RPM	BHP	RPM	BHP	RPM	BHP	RPM	BHP
3000	523	0.58	592	0.73	657	0.88	718	1.05	775	1.22
3250	555	0.71	620	0.87	681	1.04	739	1.21	794	1.39
3500	588	0.86	649	1.03	707	1.21	762	1.39	815	1.58
3750	621	1.03	679	1.21	734	1.40	786	1.59	837	1.79
4000	655	1.23	709	1.42	761	1.61	812	1.82	860	2.03
4250	689	1.45	741	1.65	790	1.86	838	2.07	885	2.29
4500	723	1.69	773	1.90	820	2.12	866	2.35	910	2.57
4750	758	1.96	805	2.19	850	2.42	894	2.65	937	2.89
5000	793	2.26	838	2.50	881	2.74	923	2.98	965	3.23

CFM	AVAILABLE EXTERNAL STATIC PRESSURE (IN. WG)									
	1.2		1.4		1.6		1.8		2.0	
	RPM	BHP	RPM	BHP	RPM	BHP	RPM	BHP	RPM	BHP
3000	830	1.39	883	1.57	934	1.76	982	1.95	1029	2.14
3250	847	1.57	897	1.76	946	1.96	993	2.16	1039	2.36
3500	865	1.77	914	1.97	961	2.18	1007	2.38	1051	2.60
3750	885	1.99	932	2.20	978	2.42	1022	2.64	1065	2.86
4000	907	2.24	952	2.46	996	2.68	1038	2.91	1080	3.14
4250	930	2.51	973	2.74	1015	2.97	1057	3.21	**1097**	**3.45**
4500	954	2.81	996	3.05	1037	3.29	1076	3.54	**1115**	**3.79**
4750	979	3.13	1019	3.38	1059	3.63	**1097**	**3.89**	–	–
5000	1005	3.49	1044	3.74	1082	4.01	–	–	–	–

Std static – 591–839 RPM, Max BHP 1.7
Med static – 733–949 RPM, Max BHP 2.8
High static – 838–1084 RPM, Max BHP 4.0
Bold Face – indicates field–supplied drive

Table 36 – 50TCQD12 **10 VERTICAL SUPPLY**

CFM	AVAILABLE EXTERNAL STATIC PRESSURE (IN. WG)									
	0.2		0.4		0.6		0.8		1.0	
	RPM	BHP	RPM	BHP	RPM	BHP	RPM	BHP	RPM	BHP
3000	556	0.65	623	0.80	684	0.95	738	1.11	789	1.26
3250	590	0.79	655	0.96	713	1.13	766	1.29	815	1.46
3500	625	0.96	687	1.14	742	1.32	794	1.50	841	1.68
3750	661	1.16	719	1.35	773	1.54	822	1.73	869	1.93
4000	697	1.37	753	1.58	804	1.79	852	1.99	897	2.20
4250	733	1.62	787	1.84	836	2.06	883	2.28	926	2.49
4500	770	1.89	821	2.13	869	2.36	914	2.59	956	2.82
4750	807	2.20	856	2.45	902	2.69	945	2.94	986	3.18
5000	844	2.54	891	2.80	936	3.06	978	3.31	1018	3.57

CFM	AVAILABLE EXTERNAL STATIC PRESSURE (IN. WG)									
	1.2		1.4		1.6		1.8		2.0	
	RPM	BHP	RPM	BHP	RPM	BHP	RPM	BHP	RPM	BHP
3000	836	1.42	881	1.57	923	1.73	963	1.89	1001	2.05
3250	861	1.63	904	1.79	945	1.96	985	2.13	1023	2.30
3500	886	1.86	929	2.04	969	2.22	1008	2.40	1045	2.58
3750	912	2.12	954	2.31	994	2.50	1031	2.70	1068	2.89
4000	940	2.40	980	2.61	1019	2.81	1056	3.02	**1092**	**3.22**
4250	968	2.71	1007	2.93	1045	3.15	1081	3.36	**1117**	**3.58**
4500	996	3.05	1035	3.28	1072	3.51	**1108**	**3.74**	**1142**	**3.97**
4750	1026	3.42	1063	3.66	**1100**	**3.91**	–	–	–	–
5000	1056	3.82	–	–	–	–	–	–	–	–

Std static – 591–839 RPM, Max BHP 1.7
Med static – 733–949 RPM, Max BHP 2.8
High static – 838–1084 RPM, Max BHP 4.0
Bold Face – indicates field–supplied drive

FAN PERFORMANCE (cont)

Table 37 – 50TCQD14 **12.5 TON HORIZONTAL SUPPLY**

CFM	AVAILABLE EXTERNAL STATIC PRESSURE (IN. WG)									
	0.2		0.4		0.6		0.8		1.0	
	RPM	BHP	RPM	BHP	RPM	BHP	RPM	BHP	RPM	BHP
3750	**381**	**0.53**	**452**	**0.74**	520	0.98	584	1.26	645	1.56
4063	**401**	**0.63**	**468**	**0.86**	531	1.11	592	1.39	651	1.69
4375	**421**	**0.75**	**484**	**0.99**	544	1.25	601	1.53	657	1.85
4688	**441**	**0.89**	**501**	**1.14**	558	1.40	612	1.70	666	2.02
5000	**462**	**1.04**	519	1.30	573	1.58	625	1.88	675	2.21
5313	**483**	**1.21**	537	1.49	589	1.77	638	2.08	686	2.42
5625	**504**	**1.40**	556	1.69	605	1.99	653	2.31	699	2.65
5938	525	1.61	575	1.91	622	2.22	668	2.55	712	2.90
6250	546	1.84	595	2.15	640	2.48	684	2.82	*726*	*3.17*

CFM	AVAILABLE EXTERNAL STATIC PRESSURE (IN. WG)											
	1.2		1.4		1.6		1.8		1.9		2.0	
	RPM	BHP	RPM	BHP	RPM	BHP	RPM	BHP	RPM	BHP	RPM	BHP
3750	703	1.88	757	2.23	808	2.59	855	2.97	878	3.17	900	3.36
4063	707	2.03	760	2.38	810	2.75	857	3.14	880	3.34	902	3.55
4375	711	2.18	763	2.55	812	2.93	859	3.33	882	3.53	904	3.74
4688	717	2.36	767	2.73	815	3.12	862	3.52	884	3.73	906	3.94
5000	725	2.55	*773*	*2.93*	820	3.32	865	3.73	887	3.95	908	4.16
5313	734	2.77	*780*	*3.15*	825	3.55	869	3.96	890	4.18	912	4.40
5625	*744*	*3.01*	*788*	*3.39*	832	3.79	874	4.22	895	4.44	916	4.66
5938	*755*	*3.27*	798	3.65	840	4.06	881	4.49	901	4.71	921	4.94
6250	*768*	*3.55*	808	3.94	849	4.36	888	4.79	908	5.01	927	5.24

Std static – 507–676 RPM, Max BHP 2.9

Med static – 634–833 RPM, Max BHP 2.9

Single Speed motor: High static – 792–971 RPM, 208V: Max BHP 5.0; 230V/460V: Max BHP 6.1; 575V: Max BHP 5.9

2–Speed motor: High static–High efficiency – 792–971 RPM, 208V: Max BHP 6.5; 230V: Max BHP 6.9; 406V: 7.0 Max BHP; 575V: Max BHP 8.3

Bold Face – requires standard static drive package with KR11HY153 (1VP34) motor pulley (338–507)

Italics – requires high static drive package with KR11HY186 (1VM50) motor pulley (684–864)

Table 38 – 50TCQD14 **12.5 VERTICAL SUPPLY**

CFM	AVAILABLE EXTERNAL STATIC PRESSURE (IN. WG)									
	0.2		0.4		0.6		0.8		1.0	
	RPM	BHP	RPM	BHP	RPM	BHP	RPM	BHP	RPM	BHP
3750	**441**	**0.65**	513	0.88	582	1.15	647	1.45	707	1.78
4063	**466**	**0.78**	533	1.03	598	1.30	660	1.61	718	1.95
4375	**491**	**0.94**	554	1.19	615	1.48	674	1.80	730	2.14
4688	517	1.11	576	1.38	634	1.68	690	2.00	744	2.36
5000	543	1.31	599	1.59	653	1.90	706	2.23	758	2.59
5313	570	1.54	622	1.82	674	2.14	724	2.48	774	2.85
5625	596	1.78	646	2.08	695	2.41	743	2.76	*790*	*3.14*
5938	623	2.06	671	2.37	717	2.71	*763*	*3.07*	808	3.45
6250	650	2.36	695	2.69	*740*	*3.03*	*784*	*3.40*	827	3.80

CFM	AVAILABLE EXTERNAL STATIC PRESSURE (IN. WG)											
	1.2		1.4		1.6		1.8		1.9		2.0	
	RPM	BHP	RPM	BHP	RPM	BHP	RPM	BHP	RPM	BHP	RPM	BHP
3750	764	2.12	816	2.48	866	2.86	912	3.24	935	3.44	956	3.64
4063	773	2.31	825	2.68	874	3.07	921	3.47	943	3.68	965	3.88
4375	784	2.51	835	2.90	883	3.30	929	3.72	951	3.93	973	4.14
4688	795	2.73	845	3.13	893	3.54	938	3.98	960	4.19	981	4.42
5000	808	2.98	856	3.38	903	3.81	947	4.25	969	4.48	990	4.71
5313	822	3.25	868	3.66	914	4.10	957	4.55	978	4.78	999	5.02
5625	837	3.54	882	3.96	925	4.41	968	4.87	989	5.11	1009	5.35
5938	852	3.86	896	4.30	938	4.75	980	5.22	1000	5.46	1020	5.71
6250	869	4.22	911	4.65	952	5.12	992	5.59	1012	5.84	1032	6.09

Std static – 507–676 RPM, Max BHP 2.9

Med static – 634–833 RPM, Max BHP 2.9

Single Speed motor: High static – 792–971 RPM, 208V: Max BHP 5.0; 230V/460V: Max BHP 6.1; 575V: Max BHP 5.9

2–Speed motor: High static–High efficiency – 792–971 RPM, 208V: Max BHP 6.5; 230V: Max BHP 6.9; 406V: 7.0 Max BHP; 575V: Max BHP 8.3

Bold Face – requires standard static drive package with KR11HY153 (1VP34) motor pulley (338–507)

Italics – requires high static drive package with KR11HY186 (1VM50) motor pulley (684–864)

Underline – requires high static drive package with KR11HY194 (1VP60) motor pulley (864–1061)

FAN PERFORMANCE (cont)

Table 39 – PULLEY ADJUSTMENT - BELT DRIVE

UNIT		MOTOR/DRIVE COMBO	MOTOR PULLEY TURNS OPEN												
			0	0.5	1	1.5	2	2.5	3	3.5	4	4.5	5	5.5	6
07	3 phase	Standard Static	1192	1161	1129	1098	1066	1035	1004	972	941	909	878	–	–
		Medium Static	1380	1349	1317	1286	1254	1223	1192	1160	1129	1097	1066	–	–
		High Static	1639	1596	1553	1510	1467	1424	1380	1337	1294	1251	1208	–	–
08	3 phase	Standard Static	652	633	614	594	575	556	537	518	498	479	460	–	–
		Medium Static	838	813	789	764	739	715	690	665	640	616	591	–	–
		High Static	1084	1059	1035	1010	986	961	936	912	887	863	838	–	–
09	3 phase	Standard Static	652	633	614	594	575	556	537	518	498	479	460	–	–
		Medium Static	838	813	789	764	739	715	690	665	640	616	591	–	–
		High Static	1084	1059	1035	1010	986	961	936	912	887	863	838	–	–
12	3 phase	Standard Static	652	633	614	594	575	556	537	518	498	479	460	–	–
		Medium Static	838	813	789	764	739	715	690	665	640	616	591	–	–
		High Static	1084	1059	1035	1010	986	961	936	912	887	863	838	–	–
14	3 phase	Standard Static	676	659	642	625	608	592	575	558	541	524	507	*	*
		Medium Static	**	**	833	813	793	773	753	734	714	694	674	654	634
		High Static	**	**	971	953	935	917	899	882	864	846	828	810	792

NOTE: Do not adjust pulley further than 5 turns open.

– Factory settings

* Do not set motor pulley above 5 turns open for A or AX section belts

** Do not set motor pulley below 1 turn open for B or BX section belts

Table 40 – 50TCQA07 SINGLE STAGE COOLING WITH SINGLE SPEED INDOOR FAN MOTOR

V–Ph–Hz	VOLTAGE RANGE		COMP		OFM (ea)		IFM		
	MIN	MAX	RLA	LRA	WATTS	FLA	TYPE	EFF at Full Load	FLA
208–3–60	187	253	19.6	136	325	1.5	STD	75%	5.2
							MED	89%	8.4
							HIGH	89%	8.4
230–3–60	187	253	19.6	136	325	1.5	STD	75%	4.9
							MED	89%	8.3
							HIGH	89%	8.3
460–3–60	414	506	8.2	66	325	0.8	STD	75%	2.5
							MED	89%	4.2
							HIGH	89%	4.2
575–3–60	518	633	6.6	55	325	0.6	STD	72%	1.6
							MED	77%	2.8
							HIGH	77%	2.8

See Legend and Notes for Tables 40–59 on Page 63.

Table 41 – 50TCQA07 SINGLE STAGE COOLING WITH 2-SPEED INDOOR FAN MOTOR

V–Ph–Hz	VOLTAGE RANGE		COMP		OFM (ea)		IFM		
	MIN	MAX	RLA	LRA	WATTS	FLA	TYPE	EFF at Full Load	FLA
208–3–60	187	253	19.6	136	325	1.5	STD	77%	7.1
							MED	85%	8.6
							HIGH	82%	10.8
230–3–60	187	253	19.6	136	325	1.5	STD	77%	6.8
							MED	85%	7.8
							HIGH	82%	9.8
460–3–60	414	506	8.2	66	325	0.8	STD	77%	3.4
							MED	85%	3.8
							HIGH	82%	4.9
575–3–60	518	633	6.6	55	325	0.6	STD	80%	3.5
							MED	84%	4.5
							HIGH	84%	4.5

See Legend and Notes for Tables 40–59 on Page 63.

Table 42 – 50TCQD08 **2-STAGE COOLING WITH SINGLE SPEED INDOOR FAN MOTOR**

V–Ph–Hz	VOLTAGE RANGE		COMP 1		COMP 2		OFM (ea)		IFM		
	MIN	MAX	RLA	LRA	RLA	LRA	WATTS	FLA	TYPE	EFF at Full Load	FLA
208–3–60	187	253	13.1	83	13.1	83	325	1.5	STD	75%	5.2
									MED	79%	8.4
									HIGH	79%	8.4
230–3–60	187	253	13.1	83	13.1	83	325	1.5	STD	75%	4.9
									MED	79%	8.3
									HIGH	79%	8.3
460–3–60	414	506	6.1	41	6.1	41	325	0.8	STD	75%	2.5
									MED	79%	4.2
									HIGH	79%	4.2
575–3–60	518	633	4.4	33	4.4	33	325	0.6	STD	72%	1.6
									MED	77%	2.8
									HIGH	77%	2.8

See Legend and Notes for Tables 40–59 on Page 63.

Table 43 – 50TCQD08 **2-STAGE COOLING WITH 2-SPEED INDOOR FAN MOTOR**

V–Ph–Hz	VOLTAGE RANGE		COMP 1		COMP 2		OFM (ea)		IFM		
	MIN	MAX	RLA	LRA	RLA	LRA	WATTS	FLA	TYPE	EFF at Full Load	FLA
208–3–60	187	253	13.1	83	13.1	83	325	1.5	STD	84%	5.8
									MED	85%	8.6
									HIGH	85%	8.6
230–3–60	187	253	13.1	83	13.1	83	325	1.5	STD	84%	5.6
									MED	85%	7.8
									HIGH	85%	7.8
460–3–60	414	506	6.1	41	6.1	41	325	0.8	STD	79%	2.9
									MED	85%	3.8
									HIGH	85%	3.8
575–3–60	518	633	4.4	33	4.4	33	325	0.6	STD	81%	2.8
									MED	84%	4.5
									HIGH	84%	4.5

See Legend and Notes for Tables 40–59 on Page 63.

Table 44 – 50TCQD09 **2-STAGE COOLING WITH SINGLE SPEED INDOOR FAN MOTOR**

V–Ph–Hz	VOLTAGE RANGE		COMP 1		COMP 2		OFM (ea)		IFM		
	MIN	MAX	RLA	LRA	RLA	LRA	WATTS	FLA	TYPE	EFF at Full Load	FLA
208–3–60	187	253	14.5	98	13.7	83	325	1.5	STD	75%	5.2
									MED	79%	8.4
									HIGH	79%	8.4
230–3–60	187	253	14.5	98	13.7	83	325	1.5	STD	75%	4.9
									MED	79%	8.3
									HIGH	79%	8.3
460–3–60	414	506	6.3	55	6.2	41	325	0.8	STD	75%	2.5
									MED	79%	4.2
									HIGH	79%	4.2
575–3–60	518	633	6.0	41	4.8	33	325	0.6	STD	72%	1.6
									MED	77%	2.8
									HIGH	77%	2.8

See Legend and Notes for Tables 40–59 on Page 63.

Table 45 – 50TCQD09 **2-STAGE COOLING WITH 2-SPEED INDOOR FAN MOTOR**

V–Ph–Hz	VOLTAGE RANGE		COMP 1		COMP 2		OFM (ea)		IFM		
	MIN	MAX	RLA	LRA	RLA	LRA	WATTS	FLA	TYPE	EFF at Full Load	FLA
208–3–60	187	253	14.5	98	13.7	83	325	1.5	STD	84%	5.8
									MED	85%	8.6
									HIGH	85%	8.6
230–3–60	187	253	14.5	98	13.7	83	325	1.5	STD	84%	5.6
									MED	85%	7.8
									HIGH	85%	7.8
460–3–60	414	506	6.3	55	6.2	41	325	0.8	STD	79%	2.9
									MED	85%	3.8
									HIGH	85%	3.8
575–3–60	518	633	6.0	41	4.8	33	325	0.6	STD	81%	2.8
									MED	84%	4.5
									HIGH	84%	4.5

See Legend and Notes for Tables 40–59 on Page 63.

Table 46 – 50TCQD12 **2-STAGE COOLING WITH SINGLE SPEED INDOOR FAN MOTOR**

V–Ph–Hz	VOLTAGE RANGE		COMP 1		COMP 2		OFM (ea)		IFM		
	MIN	MAX	RLA	LRA	RLA	LRA	WATTS	FLA	TYPE	EFF at Full Load	FLA
208–3–60	187	253	15.6	110	15.9	110	1070	6.2	STD MED HIGH	69% 87% 83%	5.2 10.6 13.6
230–3–60	187	253	15.6	110	15.9	110	1070	6.2	STD MED HIGH	69% 87% 83%	5.2 10.6 12.7
460–3–60	414	506	7.7	52	7.7	52	1070	3.1	STD MED HIGH	69% 87% 83%	2.6 5.3 6.4
575–3–60	518	633	5.8	39	5.7	39	1070	2.5	STD MED HIGH	78% 77% 81%	2.0 2.8 5.6

See Legend and Notes for Tables 40–59 on Page 63.

Table 47 – 50TCQD12 **2-STAGE COOLING WITH 2-SPEED INDOOR FAN MOTOR**

V–Ph–Hz	VOLTAGE RANGE		COMP 1		COMP 2		OFM (ea)		IFM		
	MIN	MAX	RLA	LRA	RLA	LRA	WATTS	FLA	TYPE	EFF at Full Load	FLA
208–3–60	187	253	15.6	110	15.9	110	1070	6.2	STD MED HIGH	77% 82% 84%	7.1 10.8 13.6
230–3–60	187	253	15.6	110	15.9	110	1070	6.2	STD MED HIGH	77% 82% 84%	6.8 9.8 12.7
460–3–60	414	506	7.7	52	7.7	52	1070	3.1	STD MED HIGH	77% 82% 84%	3.4 4.9 6.4
575–3–60	518	633	5.8	39	5.7	39	1070	2.5	STD MED HIGH	80% 84% 83%	3.5 4.5 6.2

See Legend and Notes for Tables 40–59 on Page 63.

Table 48 – 50TCQD14 **2-STAGE COOLING WITH SINGLE SPEED INDOOR FAN MOTOR**

V–Ph–Hz	VOLTAGE RANGE		COMP 1		COMP 2		OFM (ea)		IFM		
	MIN	MAX	RLA	LRA	RLA	LRA	WATTS	FLA	TYPE	EFF at Full Load	FLA
208–3–60	187	253	22.4	149	22.4	149	280	1.5	STD MED HIGH	79% 79% 90%	7.5 7.5 20.4
230–3–60	187	253	22.4	149	22.4	149	280	1.5	STD MED HIGH	79% 79% 90%	7.5 7.5 20.4
460–3–60	414	506	10.6	75	10.6	75	280	0.8	STD MED HIGH	79% 79% 90%	3.4 3.4 10.2
575–3–60	518	633	8.5	54	8.5	54	280	0.7	STD MED HIGH	77% 77% 94%	2.8 2.8 9.0

See Legend and Notes for Tables 40–59 on Page 63.

Table 49 – 50TCQD14 **2-STAGE COOLING WITH 2-SPEED INDOOR FAN MOTOR**

V–Ph–Hz	VOLTAGE RANGE		COMP 1		COMP 2		OFM (ea)		IFM		
	MIN	MAX	RLA	LRA	RLA	LRA	WATTS	FLA	TYPE	EFF at Full Load	FLA
208–3–60	187	253	22.4	149	22.4	149	280	1.5	STD MED HIGH	85% 85% 90%	8.6 8.6 20.4
230–3–60	187	253	22.4	149	22.4	149	280	1.5	STD MED HIGH	85% 85% 90%	7.8 7.8 20.4
460–3–60	414	506	10.6	75	10.6	75	280	0.8	STD MED HIGH	85% 85% 90%	3.8 3.8 10.2
575–3–60	518	633	8.5	54	8.5	54	280	0.7	STD MED HIGH	84% 84% 94%	4.5 4.5 9.0

See Legend and Notes for Tables 40–59 on Page 63.

Legend and Notes for Tables 40–59

LEGEND:

BRKR	–	Circuit breaker
C.O.	–	Convenience outlet
DISC.	–	Disconnect
FLA	–	Full load amps
LRA	–	Locked rotor amps
MCA	–	Minimum circuit amps
P.E.	–	Power exhaust
Pwrd fr/ unit	–	Powered from unit
PWRD C.O.	–	Powered convenience outlet
RLA	–	Rated load amps
UNPWR C.O.	–	Unpowered convenience outlet

NOTES:

1. In compliance with NEC requirements for multimotor and combination load equipment (refer to NEC Articles 430 and 440), the overcurrent protective device for the unit shall be fuse or HACR breaker. Canadian units may be fuse or circuit breaker.
2. For 208/230 v units, where one value is shown it is the same for either 208 or 230 volts.
3. **Unbalanced 3-Phase Supply Voltage**
   Never operate a motor where a phase imbalance in supply voltage is greater than 2%. Use the following formula to determine the percentage of voltage imbalance.

$$\text{\% Voltage Imbalance} = 100 \times \frac{\text{max voltage deviation from average voltage}}{\text{average voltage}}$$

Example: Supply voltage is 230-3-60

AB = 224V
BC = 231V
AC = 226V

$$\text{Average Voltage} = \frac{(224 + 231 + 226)}{3} = \frac{681}{3}$$

$$= 227$$

Determine maximum deviation from average voltage.

(AB) 227 – 224 = 3V Maximum deviation is 4V.

(BC) 231 – 227 = 4V Determine percent of voltage imbalance.

$$\text{\% Voltage Imbalance} = 100 \times \frac{4}{227}$$

$$= 1.76\%$$

This amount of phase imbalance is satisfactory as it is below the maximum allowable 2%.

IMPORTANT: If the supply voltage phase imbalance is more than 2%, contact your local electric utility company immediately.

ELECTRICAL INFORMATION (cont)

Table 50 – 50TCQA07 - UNIT WIRE/FUSE OR HACR BREAKER SIZING DATA - SINGLE SPEED INDOOR FAN MOTOR

UNIT	NO M. V–Ph–HZ	IFM TYPE	ELEC. HTR			NO C.O. or UNPWR C.O.								w/ PWRD C.O.							
						NO P.E.				w/ P.E. (pwrd fr/unit)				NO P.E.				w/ P.E. (pwrd fr/unit)			
			CRHEATER ***A00	Nom (kW)	FLA	MCA	MAX FUSE or HACR BRKR	DISC. SIZE FLA	DISC. SIZE LRA	MCA	MAX FUSE or HACR BRKR	DISC. SIZE FLA	DISC. SIZE LRA	MCA	MAX FUSE or HACR BRKR	DISC. SIZE FLA	DISC. SIZE LRA	MCA	MAX FUSE or HACR BRKR	DISC. SIZE FLA	DISC. SIZE LRA
50TCQA07	208/230–3–60	STD	NONE	–	–	32	50	30	159	34	50	32	161	36	50	36	164	38	50	38	166
			102A	4.9/6.5	13.6/15.6	49/51	60/60	46/48	173/175	51/53	60/60	48/50	175/177	53/56	60/60	51/54	178/180	55/58	60/60	54/56	180/182
			104B	7.9/10.5	21.9/25.3	59/63	60/70	55/59	181/184	61/65	70/70	58/62	183/186	64/68	70/80	61/65	186/189	66/70	70/80	63/67	188/191
			105A	12.0/16.0	33.4/38.5	73/79	80/80	69/75	192/198	75/81	80/90	71/77	194/200	78/85	80/90	74/80	197/203	80/86	80/90	76/82	199/205
			104B+104B	15.8/21.0	43.8/50.5	86/94	90/100	81/88	247/260	88/96	90/100	83/91	249/262	91/100	100/100	86/94	252/265	93/101	100/110	88/96	254/267
			104B+105A	19.9/26.5	55.2/63.8	101/111	110/125	94/104	269/287	103/113	110/125	96/106	271/289	105/116	110/125	99/109	274/292	107/118	110/125	101/111	276/294
		MED	NONE	–	–	35/35	50/50	34/34	212	37/37	50/50	36/36	214	40/40	50/50	39/39	217	42/41	60/60	42/42	219
			102A	4.9/6.5	13.6/15.6	52/54	60/60	50/52	226/228	54/56	60/60	52/54	228/230	57/59	60/60	55/57	231/233	59/61	60/70	57/59	233/235
			104B	7.9/10.5	21.9/25.3	62/66	70/70	59/63	234/237	64/68	70/80	61/65	236/239	67/71	80/80	65/68	239/242	69/73	80/80	67/71	241/244
			105A	12.0/16.0	33.4/38.5	77/83	80/90	72/78	245/251	79/85	80/90	75/80	247/253	81/88	90/90	78/84	250/256	83/90	90/90	80/86	252/258
			104B+104B	15.8/21.0	43.8/50.5	90/98	90/100	84/92	300/313	92/100	100/100	86/94	302/315	94/103	100/110	90/97	305/318	96/105	100/110	92/100	307/320
			104B+105A	19.9/26.5	55.2/63.8	104/115	110/125	97/107	322/340	106/116	110/125	100/109	324/342	109/119	110/125	103/113	327/345	111/121	125/125	105/115	329/347
		HIGH	NONE	–	–	35/35	50/50	34/34	212	37/37	50/50	36/36	214	40/40	50/50	39/39	217	42/41	60/60	42/42	219
			102A	4.9/6.5	13.6/15.6	52/54	60/60	50/52	226/228	54/56	60/60	52/54	228/230	57/59	60/60	55/57	231/233	59/61	60/70	57/59	233/235
			104B	7.9/10.5	21.9/25.3	62/66	70/70	59/63	234/237	64/68	70/80	61/65	236/239	67/71	80/80	65/68	239/242	69/73	80/80	67/71	241/244
			105A	12.0/16.0	33.4/38.5	77/83	80/90	72/78	245/251	79/85	80/90	75/80	247/253	81/88	90/90	78/84	250/256	83/90	90/90	80/86	252/258
			104B+104B	15.8/21.0	43.8/50.5	90/98	90/100	84/92	300/313	92/100	100/100	86/94	302/315	94/103	100/110	90/97	305/318	96/105	100/110	92/100	307/320
			104B+105A	19.9/26.5	55.2/63.8	104/115	110/125	97/107	322/340	106/116	110/125	100/109	324/342	109/119	110/125	103/113	327/345	111/121	125/125	105/115	329/347
	460–3–60	STD	NONE	–	–	14	20	13	77	15	20	14	78	16	20	16	79	17	25	17	80
			106A	6.0	7.2	23	25	22	84	24	25	23	85	25	30	24	86	26	30	25	87
			108A	11.5	13.8	31	35	29	91	32	35	30	92	34	35	32	93	35	35	33	94
			109A	14.0	16.8	35	35	33	94	36	40	34	95	37	40	35	96	38	40	36	97
			108A+108A	23.0	27.7	49	50	45	132	50	50	46	133	51	60	48	134	52	60	49	135
			108A+109A	25.5	30.7	52	60	49	138	53	60	50	139	55	60	51	140	56	60	52	141
		MED	NONE	–	–	16	20	15	104	17	20	16	105	18	25	18	106	19	25	19	107
			106A	6.0	7.2	25	30	23	111	26	30	25	112	27	30	26	113	28	30	27	114
			108A	11.5	13.8	33	35	31	118	34	35	32	119	35	35	34	120	36	40	35	121
			109A	14.0	16.8	37	40	35	121	38	40	36	122	39	40	37	123	40	40	38	124
			108A+108A	23.0	27.7	50	50	47	159	51	60	48	160	53	60	50	161	54	60	51	162
			108A+109A	25.5	30.7	54	60	50	165	55	60	52	166	56	60	53	167	57	60	54	168
		HIGH	NONE	–	–	16	20	15	104	17	20	16	105	18	25	18	106	19	25	19	107
			106A	6.0	7.2	25	30	23	111	26	30	25	112	27	30	26	113	28	30	27	114
			108A	11.5	13.8	33	35	31	118	34	35	32	119	35	35	34	120	36	40	35	121
			109A	14.0	16.8	37	40	35	121	38	40	36	122	39	40	37	123	40	40	38	124
			108A+108A	23.0	27.7	50	50	47	159	51	60	48	160	53	60	50	161	54	60	51	162
			108A+109A	25.5	30.7	54	60	50	165	55	60	52	166	56	60	53	167	57	60	54	168
	575–3–60	STD	NONE	–	–	11	15	10	64	13	15	12	66	13	15	12	66	15	20	14	68
		MED	NONE	–	–	12	15	12	79	14	20	14	81	14	15	13	81	16	20	16	83
		HIGH	NONE	–	–	12	15	12	79	14	20	14	81	14	15	13	81	16	20	16	83

See Legend and Notes for Tables 40–59 on Page 63.

ELECTRICAL INFORMATION (cont)

Table 51 – 50TCQD08 - UNIT WIRE/FUSE OR HACR BREAKER SIZING DATA - SINGLE SPEED INDOOR FAN MOTOR

UNIT	NOM. V–Ph–HZ	IFM TYPE	ELEC. HTR			NO C.O. or UNPWR C.O.								w/ PWRD C.O.							
						NO P.E.				w/ P.E. (pwrd fr/unit)				NO P.E.				w/ P.E. (pwrd fr/unit)			
			CRHEATER ***A00	Nom (kW)	FLA	MCA	MAX FUSE or HACR BRKR	DISC. SIZE		MCA	MAX FUSE or HACR BRKR	DISC. SIZE		MCA	MAX FUSE or HACR BRKR	DISC. SIZE		MCA	MAX FUSE or HACR BRKR	DISC. SIZE	
								FLA	LRA			FLA	LRA			FLA	LRA			FLA	LRA
50TCQD08	208/230–3–60	STD	NONE	–	–	38	50	40	193	42	50	44	197	43	50	45	198	47	50	49	202
			117A	7.8/10.4	21.7/25.0	65/69	70/70	65/68	215/218	69/73	70/80	69/73	219/222	70/74	70/80	70/74	220/223	74/78	80/80	74/78	224/227
			110A	12.0/16.0	33.4/38.5	80/86	80/90	78/84	226/232	84/90	90/90	82/88	230/236	85/91	90/100	83/89	231/237	88/95	90/100	88/94	235/241
			111A	18.6/24.8	51.7/59.7	103/113	110/125	99/108	245/253	107/117	110/125	103/113	249/257	108/118	110/125	105/114	250/258	111/121	125/125	109/118	254/262
			112A	24.0/32.0	66.7/77.0	122/134	125/150	116/128	260/270	125/138	125/150	121/132	264/274	126/139	150/150	122/134	265/275	130/143	150/150	126/138	269/279
			112A+117A	31.8/42.4	88.4/102.0	149/166	150/175	141/157	370/397	152/169	175/175	146/161	374/401	153/170	175/175	147/162	375/402	157/174	175/175	151/167	379/406
		MED	NONE	–	–	40	50	42	230	44	50	47	234	45	50	48	235	49	60	52	239
			117A	7.8/10.4	21.7/25.0	68/72	70/80	67/71	252/255	71/75	80/80	72/75	256/259	72/76	80/80	73/76	257/260	76/80	80/80	77/81	261/264
			110A	12.0/16.0	33.4/38.5	82/89	90/90	81/86	263/269	86/92	90/100	85/91	267/273	87/93	90/100	86/92	268/274	91/97	100/100	91/96	272/278
			111A	18.6/24.8	51.7/59.7	105/115	110/125	102/111	282/290	109/119	110/125	106/115	286/294	110/120	110/125	107/116	287/295	114/124	125/125	112/121	291/299
			112A	24.0/32.0	66.7/77.0	124/137	125/150	119/131	297/307	128/140	150/150	123/135	301/311	129/141	150/150	124/136	302/312	132/145	150/150	129/141	306/316
			112A+117A	31.8/42.4	88.4/102.0	151/168	175/175	144/160	407/434	155/172	175/175	148/164	411/438	156/173	175/175	149/165	412/439	160/177	175/200	154/169	416/443
		HIGH	NONE	–	–	40	50	42	230	44	50	47	234	45	50	48	235	49	60	52	239
			117A	7.8/10.4	21.7/25.0	68/72	70/80	67/71	252/255	71/75	80/80	72/75	256/259	72/76	80/80	73/76	257/260	76/80	80/80	77/81	261/264
			110A	12.0/16.0	33.4/38.5	82/89	90/90	81/86	263/269	86/92	90/100	85/91	267/273	87/93	90/100	86/92	268/274	91/97	100/100	91/96	272/278
			111A	18.6/24.8	51.7/59.7	105/115	110/125	102/111	282/290	109/119	110/125	106/115	286/294	110/120	110/125	107/116	287/295	114/124	125/125	112/121	291/299
			112A	24.0/32.0	66.7/77.0	124/137	125/150	119/131	297/307	128/140	150/150	123/135	301/311	129/141	150/150	124/136	302/312	132/145	150/150	129/141	306/316
			112A+117A	31.8/42.4	88.4/102.0	151/168	175/175	144/160	407/434	155/172	175/175	148/164	411/438	156/173	175/175	149/165	412/439	160/177	175/200	154/169	416/443
	460–3–60	STD	NONE	–	–	18	20	19	95	20	25	21	97	21	25	21	97	22	25	23	99
			116B	13.9	16.7	39	40	38	112	41	45	40	114	41	45	41	114	43	45	43	116
			113B	16.5	19.8	43	45	42	115	45	45	44	117	45	45	44	117	47	50	46	119
			114B	27.8	33.4	60	60	57	128	62	70	59	130	62	70	60	130	64	70	62	132
			115B	33.0	39.7	68	70	65	135	70	70	67	137	70	70	67	137	72	80	69	139
			128B	41.7	50.2	81	90	77	145	83	90	79	147	83	90	79	147	85	90	81	149
		MED	NONE	–	–	19	25	20	114	21	25	22	116	21	25	22	116	23	25	24	118
			116B	13.9	16.7	40	40	39	131	42	45	41	133	42	45	42	133	44	45	44	135
			113B	16.5	19.8	44	45	43	134	46	50	45	136	46	50	45	136	48	50	47	138
			114B	27.8	33.4	61	70	58	147	63	70	60	149	63	70	61	149	65	70	63	151
			115B	33.0	39.7	69	70	65	154	71	80	68	156	71	80	68	156	73	80	70	158
			128B	41.7	50.2	82	90	78	164	84	90	80	166	84	90	80	166	86	90	82	168
		HIGH	NONE	–	–	19	25	20	114	21	25	22	116	21	25	22	116	23	25	24	118
			116B	13.9	16.7	40	40	39	131	42	45	41	133	42	45	42	133	44	45	44	135
			113B	16.5	19.8	44	45	43	134	46	50	45	136	46	50	45	136	48	50	47	138
			114B	27.8	33.4	61	70	58	147	63	70	60	149	63	70	61	149	65	70	63	151
			115B	33.0	39.7	69	70	65	154	71	80	68	156	71	80	68	156	73	80	70	158
			128B	41.7	50.2	82	90	78	164	84	90	80	166	84	90	80	166	86	90	82	168
	575–3–60	STD	NONE	–	–	13	15	13	77	17	20	18	81	15	20	15	79	19	20	20	83
			118A	18.0	17.3	35	35	33	94	39	40	38	98	36	40	35	96	40	40	40	100
			119A	36.0	34.6	56	60	53	112	60	60	58	116	58	60	55	114	62	70	59	118
		MED	NONE	–	–	14	20	15	92	18	20	19	96	16	20	17	94	20	25	21	98
			118A	18.0	17.3	36	40	35	109	40	40	39	113	38	40	37	111	41	45	41	115
			119A	36.0	34.6	58	60	55	127	61	70	59	131	59	60	56	129	63	70	61	133
		HIGH	NONE	–	–	14	20	15	92	18	20	19	96	16	20	17	94	20	25	21	98
			118A	18.0	17.3	36	40	35	109	40	40	39	113	38	40	37	111	41	45	41	115
			119A	36.0	34.6	58	60	55	127	61	70	59	131	59	60	56	129	63	70	61	133

See Legend and Notes for Tables 40–59 on Page 63.

ELECTRICAL INFORMATION (cont)

Table 52 – 50TCQD09 - UNIT WIRE/FUSE OR HACR BREAKER SIZING DATA - SINGLE SPEED INDOOR FAN MOTOR

UNIT	NOM. V–Ph–HZ	IFM TYPE	ELEC. HTR			NO C.O. or UNPWR C.O.								w/ PWRD C.O.							
						NO P.E.				w/ P.E. (pwrd fr/unit)				NO P.E.				w/ P.E. (pwrd fr/unit)			
			CRHEATER ***A00	Nom (kW)	FLA	MCA	MAX FUSE or HACR BRKR	DISC. SIZE		MCA	MAX FUSE or HACR BRKR	DISC. SIZE		MCA	MAX FUSE or HACR BRKR	DISC. SIZE		MCA	MAX FUSE or HACR BRKR	DISC. SIZE	
								FLA	LRA			FLA	LRA			FLA	LRA			FLA	LRA
50TCQD09	208/230–3–60	STD	NONE	–	–	40	50	42	208	44	50	46	212	45	50	47	213	49	60	52	217
			117A	7.8/10.4	21.7/25.0	68/72	70/80	67/71	230/233	71/76	80/80	71/75	234/237	72/77	80/80	72/76	235/228	76/80	80/80	77/81	239/242
			110A	12.0/16.0	33.4/38.5	82/89	90/90	80/86	241/247	86/92	90/100	85/91	245/251	87/93	90/100	86/92	246/252	91/97	100/100	90/96	250/256
			111A	18.6/24.8	51.7/59.7	105/115	110/125	101/111	260/268	109/119	110/125	106/115	264/272	110/120	110/125	107/116	265/273	114/124	125/125	111/120	269/277
			112A	24.0/32.0	66.7/77.0	124/137	125/150	119/130	275/285	128/141	150/150	123/135	279/289	129/142	150/150	124/136	280/290	132/145	150/150	128/140	284/294
			112A+117A	31.8/42.4	88.4/102.0	151/168	175/175	144/159	385/412	155/172	175/175	148/164	389/416	156/173	175/175	149/165	390/417	160/177	175/200	153/169	394/421
		MED	NONE	–	–	43	50	45	245	47	60	49	249	48	60	50	250	51	60	54	254
			117A	7.8/10.4	21.7/25.0	70/74	70/80	69/73	267/270	74/78	80/80	74/78	271/274	75/79	80/80	75/79	272/275	79/83	80/90	79/83	276/279
			110A	12.0/16.0	33.4/38.5	85/91	90/100	83/89	278/284	88/95	90/100	87/93	282/288	88/94	90/100	88/94	283/289	93/100	100/100	93/99	287/293
			111A	18.6/24.8	51.7/59.7	107/117	110/125	104/113	297/305	111/121	125/125	108/118	301/309	112/122	125/125	109/119	302/310	116/126	125/150	114/123	306/314
			112A	24.0/32.0	66.7/77.0	126/139	150/150	121/133	312/322	130/143	150/150	126/137	316/326	131/144	150/150	127/139	317/327	135/148	150/150	131/143	321/331
			112A+117A	31.8/42.4	88.4/102.0	153/170	175/175	146/162	422/449	157/174	175/175	151/166	426/453	158/175	175/175	152/167	427/454	162/179	175/200	156/172	431/458
		HIGH	NONE	–	–	43	50	45	245	47	60	49	249	48	60	50	250	51	60	54	254
			117A	7.8/10.4	21.7/25.0	70/74	70/80	69/73	267/270	74/78	80/80	74/78	271/274	75/79	80/80	75/79	272/275	79/83	80/90	79/83	276/279
			110A	12.0/16.0	33.4/38.5	85/91	90/100	83/89	278/284	88/95	90/100	87/93	282/288	89/96	90/100	88/94	283/289	93/100	100/100	93/99	287/293
			111A	18.6/24.8	51.7/59.7	107/117	110/125	104/113	297/305	111/121	125/125	108/118	301/309	112/122	125/125	109/119	302/310	116/126	125/150	114/123	306/314
			112A	24.0/32.0	66.7/77.0	126/139	150/150	121/133	312/322	130/143	150/150	126/137	316/326	131/144	150/150	127/139	317/327	135/148	150/150	131/143	321/331
			112A+117A	31.8/42.4	88.4/102.0	153/170	175/175	146162	422/449	157/174	175/175	151/166	426/453	158/175	175/200	152/167	427/454	162/179	175/200	156/172	431/458
	460–3–60	STD	NONE	–	–	19	20	19	109	21	25	21	111	21	25	22	111	23	25	24	113
			116B	13.9	16.7	40	40	38	126	41	45	40	128	42	45	41	128	44	45	43	130
			113B	16.5	19.8	43	45	42	129	45	45	44	131	46	50	45	131	47	50	47	133
			114B	27.8	33.4	60	70	58	142	62	70	60	144	63	70	60	144	64	70	62	146
			115B	33.0	39.7	68	70	65	149	70	70	67	151	71	80	67	151	72	80	69	153
			128B	41.7	50.2	81	90	77	159	83	90	79	161	84	90	79	161	85	90	82	163
		MED	NONE	–	–	20	25	20	128	21	25	22	130	22	25	23	130	24	25	25	132
			116B	13.9	16.7	40	40	39	145	42	45	41	147	43	45	42	147	44	45	44	149
			113B	16.5	19.8	44	45	43	148	46	50	45	150	46	50	45	150	48	50	47	152
			114B	27.8	33.4	61	70	59	161	63	70	61	163	63	70	61	163	65	70	63	165
			115B	33.0	39.7	69	70	66	168	71	80	68	170	71	80	68	170	73	80	70	172
			128B	41.7	50.2	82	90	78	178	84	90	80	180	84	90	80	180	86	90	82	182
		HIGH	NONE	–	–	20	25	20	128	21	25	22	130	22	25	23	130	24	25	25	132
			116B	13.9	16.7	40	40	39	145	42	45	41	147	43	45	42	147	44	45	44	149
			113B	16.5	19.8	44	45	43	148	46	50	45	150	46	50	45	150	48	50	47	152
			114B	27.8	33.4	61	70	59	161	63	70	61	163	63	70	61	163	65	70	63	165
			115B	33.0	39.7	69	70	66	168	71	80	68	170	71	80	68	170	73	80	70	172
			128B	41.7	50.2	82	90	78	178	84	90	80	180	84	90	80	180	86	90	82	182
	575–3–60	STD	NONE	–	–	16	20	16	85	19	25	20	89	17	20	18	87	21	25	22	91
			118A	18.0	17.3	37	40	36	102	41	45	40	106	39	40	37	104	43	45	42	108
			119A	36.0	34.6	59	60	55	120	63	70	60	124	61	70	57	122	64	70	62	126
		MED	NONE	–	–	17	20	17	100	21	25	21	104	18	20	19	102	22	25	23	106
			118A	18.0	17.3	38	40	37	117	42	45	41	121	40	40	39	119	44	45	43	123
			119A	36.0	34.6	60	60	57	135	64	70	61	139	62	70	59	137	66	70	63	141
		HIGH	NONE	–	–	17	20	17	100	21	25	21	104	18	20	19	102	22	25	23	106
			118A	18.0	17.3	38	40	37	117	42	45	41	121	40	40	39	119	44	45	43	123
			119A	36.0	34.6	60	60	57	135	64	70	61	139	62	70	59	137	66	70	63	141

See Legend and Notes for Tables 40–59 on Page 63.

ELECTRICAL INFORMATION (cont)

Table 53 – 50TCQD12 - UNIT WIRE/FUSE OR HACR BREAKER SIZING DATA - SINGLE SPEED INDOOR FAN MOTOR

UNIT	NOM. V–Ph–HZ	IFM TYPE	ELEC. HTR			NO C.O. or UNPWR C.O.								w/ PWRD C.O.							
						NO P.E.				w/ P.E. (pwrd fr/unit)				NO P.E.				w/ P.E. (pwrd fr/unit)			
			CRHEATER****00	Nom (kW)	FLA	MCA	MAX FUSE or HACR BRKR	DISC. SIZE FLA	DISC. SIZE LRA	MCA	MAX FUSE or HACR BRKR	DISC. SIZE FLA	DISC. SIZE LRA	MCA	MAX FUSE or HACR BRKR	DISC. SIZE FLA	DISC. SIZE LRA	MCA	MAX FUSE or HACR BRKR	DISC. SIZE FLA	DISC. SIZE LRA
50TCQD12	208/230–3–60	STD	NONE	–	–	47	60	49	282	51	60	54	286	52	60	55	287	56	60	59	291
			117A	7.8/10.4	21.7/25.0	74/79	80/80	74/78	304/307	78/82	80/90	79/82	308/311	79/83	80/90	80/84	309/312	83/87	90/90	84/88	313/316
			110A	12.0/16.0	33.4/38.5	89/95	90/100	88/94	315/321	93/99	100/100	92/98	319/325	94/100	100/100	93/99	320/326	98/104	100/110	98/104	324/330
			112A	24.0/32.0	66.7/77.0	131/144	150/150	126/138	349/359	135/147	150/150	130/142	353/363	136/148	150/150	132/143	354/364	139/152	150/175	136/148	358/368
			112A+117A	31.8/42.4	88.4/102.0	158/175	175/175	151/167	459/486	162/179	175/200	155/171	463/490	163/180	175/200	157/172	464/491	166/183	175/200	161/177	468/495
			112A+110A	37.6/50.0	104.2/120.3	178/168	200/175	169/188	490/523	181/171	200/175	174/192	494/527	182/172	200/200	175/193	495/528	186/176	200/200	179/198	499/532
		MED	NONE	–	–	53	60	56	338	57	70	60	342	58	70	61	343	61	70	65	347
			117A	7.8/10.4	21.7/25.0	80/84	80/90	81/84	360/363	84/88	90/90	85/89	364/367	85/89	90/90	86/90	365/368	88/93	90/100	90/94	369/372
			110A	12.0/16.0	33.4/38.5	94/101	100/110	94/100	371/377	98/105	100/110	98/104	375/381	99/106	100/110	99/105	376/382	103/109	110/110	104/110	380/386
			112A	24.0/32.0	66.7/77.0	136/149	150/150	132/144	405/415	140/153	150/175	137/148	409/419	141/154	150/175	138/150	410/420	145/158	150/175	142/154	414/424
			112A+117A	31.8/42.4	88.4/102.0	163/180	175/200	157/173	515/542	167/184	175/200	162/177	519/546	168/185	175/200	163/178	520/547	172/189	175/200	167/183	524/551
			112A+110A	37.6/50.0	104.2/120.3	183/173	200/200	175/194	546/579	187/177	200/200	180/198	550/583	188/178	200/200	181/199	551/584	192/182	200/200	185/204	555/588
		HIGH	NONE	–	–	56/55	60/60	59/58	340	60/59	70/70	63/62	344	61/60	70/70	65/63	345	64/63	70/70	69/68	349
			117A	7.8/10.4	21.7/25.0	83/86	90/90	84/87	362/365	87/90	90/90	88/91	366/369	88/91	90/100	89/92	367/370	91/95	100/100	94/97	371/374
			110A	12.0/16.0	33.4/38.5	97/103	100/110	97/102	373/379	101/107	110/110	102/107	377/383	102/108	110/110	103/108	378/384	106/112	110/125	107/112	382/388
			112A	24.0/32.0	66.7/77.0	139/151	150/175	136/147	407/417	143/155	150/175	140/151	411/421	144/156	150/175	141/152	412/422	148/160	150/175	146/156	416/426
			112A+117A	31.8/42.4	88.4/102.0	166/182	175/200	161/175	517/544	170/186	175/200	165/180	521/548	171/187	175/200	166/181	522/549	175/191	175/200	171/185	526/553
			112A+110A	37.6/50.0	104.2/120.3	186/175	200/200	179/196	548/581	190/179	200/200	183/201	552/585	191/180	200/200	184/202	553/586	195/184	200/200	189/206	557/590
	460–3–60	STD	NONE	–	–	23	30	24	135	25	30	26	137	26	30	27	137	27	30	29	139
			116B	13.9	16.7	44	45	43	152	46	50	46	154	47	50	46	154	48	50	48	156
			113B	16.5	19.8	48	50	47	155	50	50	49	157	50	50	50	157	52	60	52	159
			115B	33.0	39.7	73	80	70	175	75	80	72	177	75	80	72	177	77	80	75	179
			128B	41.7	50.2	86	90	82	185	88	90	84	187	88	90	85	187	90	90	87	189
			129B	50.0	60.1	84	90	93	195	85	90	95	197	86	90	96	197	88	90	98	199
		MED	NONE	–	–	26	30	27	163	28	30	29	165	28	30	30	165	30	35	32	167
			116B	13.9	16.7	47	50	47	180	49	50	49	182	49	50	49	182	51	60	51	184
			113B	16.5	19.8	51	60	50	183	53	60	52	185	53	60	53	185	55	60	55	187
			115B	33.0	39.7	76	80	73	203	78	80	75	205	78	80	76	205	80	80	78	207
			128B	41.7	50.2	89	90	85	213	91	100	87	215	91	100	88	215	93	100	90	217
			129B	50.0	60.1	86	90	96	223	88	90	99	225	88	90	99	225	90	100	101	227
		HIGH	NONE	–	–	27	30	29	164	29	35	31	166	29	35	31	166	31	35	33	168
			116B	13.9	16.7	48	50	48	181	50	50	50	183	50	50	50	183	52	60	52	185
			113B	16.5	19.8	52	60	51	184	54	60	53	186	54	60	54	186	56	60	56	188
			115B	33.0	39.7	77	80	74	204	79	80	76	206	79	80	77	206	81	90	79	208
			128B	41.7	50.2	90	90	86	214	92	100	88	216	92	100	89	216	94	100	91	218
			129B	50.0	60.1	87	90	98	224	89	100	100	226	90	100	100	226	91	100	102	228
	575–3–60	STD	NONE	–	–	18	20	18	105	22	25	23	109	20	25	20	107	23	25	25	111
			118A	18.0	17.3	40	40	38	122	43	45	43	126	41	45	40	124	45	45	45	128
			119A	36.0	34.6	61	70	58	140	65	70	63	144	63	70	60	142	67	70	65	146
			118A+119A	54.0	52.0	70	80	78	209	74	80	83	213	72	80	80	211	75	80	85	215
		MED	NONE	–	–	19	20	19	116	23	25	24	120	20	25	21	118	24	30	26	122
			118A	18.0	17.3	40	40	39	133	44	45	44	137	42	45	41	135	46	50	46	139
			119A	36.0	34.6	62	70	59	151	66	70	63	155	64	70	61	153	67	70	65	157
			118A+119A	54.0	52.0	71	80	79	220	75	80	83	224	72	80	81	222	76	80	85	226
		HIGH	NONE	–	–	22	25	23	130	25	30	27	134	23	25	24	132	27	30	29	136
			118A	18.0	17.3	43	45	42	147	47	50	47	151	45	45	44	149	49	50	49	153
			119A	36.0	34.6	65	70	62	165	69	70	67	169	66	70	64	167	70	70	69	171
			118A+119A	54.0	52.0	74	80	82	234	77	80	87	238	75	80	84	236	79	80	89	240

See Legend and Notes for Tables 40–59 on Page 63.

ELECTRICAL INFORMATION (cont)

Table 54 – 50TCQD14 - UNIT WIRE/FUSE OR HACR BREAKER SIZING DATA - SINGLE SPEED INDOOR FAN MOTOR

UNIT	NOM. V–Ph–HZ	IFM TYPE	ELEC. HTR			NO C.O. or UNPWR C.O.								w/ PWRD C.O.							
						NO P.E.				w/ P.E. (pwrd fr/unit)				NO P.E.				w/ P.E. (pwrd fr/unit)			
			CRHEATER****00	Nom (kW)	FLA	MCA	MAX FUSE or HACR BRKR	DISC. SIZE		MCA	MAX FUSE or HACR BRKR	DISC. SIZE		MCA	MAX FUSE or HACR BRKR	DISC. SIZE		MCA	MAX FUSE or HACR BRKR	DISC. SIZE	
								FLA	LRA			FLA	LRA			FLA	LRA			FLA	LRA
50TCQD14	208/230–3–60	STD	NONE	–	–	63	80	65	366	67	80	70	370	68	80	71	371	71	80	75	375
			291A	12.4/16.5	34.4/39.7	106/112	110/125	105/111	400/406	110/116	110/125	109/115	404/410	111/117	125/125	110/116	405/411	114/121	125/125	115/121	409/415
			288A+291A	19.9/26.5	55.3/63.8	132/143	150/150	129/139	477/494	136/146	150/150	133/143	481/498	137/147	150/150	134/144	482/499	141/151	150/175	139/149	486/503
			294A	25.2/33.5	69.9/80.6	150/164	150/175	146/158	436/447	154/167	175/175	150/162	440/451	155/168	175/175	151/164	441/452	159/172	175/175	156/168	445/456
			288A+294A	32.7/43.5	90.7/104.7	176/194	200/200	170/186	547/575	180/198	200/200	174/190	551/579	181/199	200/200	175/191	552/580	185/202	200/225	180/196	556/584
			291A+294A	37.6/50.0	104.3/120.3	193/183	200/200	185/204	575/607	197/187	200/200	190/208	579/611	198/188	200/200	191/209	580/612	202/192	225/200	195/214	584/616
		MED	NONE	–	–	63	80	65	366	67	80	70	370	68	80	71	371	71	80	75	375
			291A	12.4/16.5	34.4/39.7	106/112	110/125	105/111	400/406	110/116	110/125	109/115	404/410	111/117	125/125	110/116	405/411	114/121	125/125	115/121	409/415
			288A+291A	19.9/26.5	55.3/63.8	132/143	150/150	129/139	477/494	136/146	150/150	133/143	481/498	137/147	150/150	134/144	482/499	141/151	150/175	139/149	486/503
			294A	25.2/33.5	69.9/80.6	150/164	150/175	146/158	436/447	154/167	175/175	150/162	440/451	155/168	175/175	151/164	441/452	159/172	175/175	156/168	445/456
			288A+294A	32.7/43.5	90.7/104.7	176/194	200/200	170/186	547/575	180/198	200/200	174/190	551/579	181/199	200/200	175/191	552/580	185/202	200/225	180/196	556/584
			291A+294A	37.6/50.0	104.3/120.3	193/183	200/200	185/204	575/607	197/187	200/200	190/208	579/611	198/188	200/200	191/209	580/612	202/192	225/200	195/214	584/616
		HIGH	NONE	–	–	76	90	80	402	80	100	85	406	81	100	86	407	84	100	90	411
			291A	12.4/16.5	34.4/39.7	119/125	125/125	120/126	436/442	123/129	125/150	124/130	440/446	124/130	125/150	125/131	441/447	127/134	150/150	130/136	445/451
			288A+291A	19.9/26.5	55.3/63.8	145/156	150/175	144/154	513/530	149/159	150/175	148/158	517/534	150/160	150/175	149/159	518/535	153/164	175/175	154/163	522/539
			294A	25.2/33.5	69.9/80.6	163/177	175/200	161/173	472/483	167/180	175/200	165/177	476/487	168/181	175/200	166/178	477/488	172/185	175/200	170/183	481/492
			288A+294A	32.7/43.5	90.7/104.7	189/207	200/225	184/201	583/611	193/210	200/225	189/205	587/615	194/211	200/225	190/206	588/616	198/215	200/225	194/210	592/620
			291A+294A	37.6/50.0	104.3/120.3	206/196	225/225	200/219	611/643	210/200	225/225	204/223	615/647	211/201	225/225	206/224	616/648	215/205	225/225	210/228	620/652
	460–3–60	STD	NONE	–	–	30	40	31	184	32	40	33	186	32	40	34	186	34	40	36	188
			292A	16.5	19.9	55	60	54	204	57	60	56	206	57	60	56	206	59	60	59	208
			289A+292A	26.5	31.9	70	70	68	248	72	80	70	250	72	80	70	250	74	80	72	252
			295A	33.5	40.3	80	90	77	224	82	90	79	226	83	90	80	226	84	90	82	228
			289A+295A	43.5	52.3	95	100	91	289	97	100	93	291	98	100	94	291	99	100	96	293
			292A+295A	50.0	60.2	90	100	100	304	92	100	102	306	93	100	103	306	94	100	105	308
		MED	NONE	–	–	30	40	31	184	32	40	33	186	32	40	34	186	34	40	36	188
			292A	16.5	19.9	55	60	54	204	57	60	56	206	57	60	56	206	59	60	59	208
			289A+292A	26.5	31.9	70	70	68	248	72	80	70	250	72	80	70	250	74	80	72	252
			295A	33.5	40.3	80	90	77	224	82	90	79	226	83	90	80	226	84	90	82	228
			289A+295A	43.5	52.3	95	100	91	289	97	100	93	291	98	100	94	291	99	100	96	293
			292A+295A	50.0	60.2	90	100	100	304	92	100	102	306	93	100	103	306	94	100	105	308
		HIGH	NONE	–	–	37	45	39	202	39	45	41	204	39	45	41	204	41	50	43	206
			292A	16.5	19.9	62	70	62	222	64	70	64	224	64	70	64	224	66	70	66	226
			289A+292A	26.5	31.9	77	80	76	266	79	80	78	268	79	80	78	268	81	90	80	270
			295A	33.5	40.3	87	90	85	242	89	90	87	244	89	90	88	244	91	100	90	246
			289A+295A	43.5	52.3	102	110	99	307	104	110	101	309	104	110	102	309	106	110	104	311
			292A+295A	50.0	60.2	97	100	108	322	99	110	110	324	99	110	111	324	101	110	113	326

See Legend and Notes for Tables 40–59 on Page 63.

ELECTRICAL INFORMATION (cont)

Table 54 - 50TCQD14 - UNIT WIRE/FUSE OR HACR BREAKER SIZING DATA - SINGLE SPEED INDOOR FAN MOTOR (cont)

UNIT	NOM. V–Ph–HZ	IFM TYPE	ELEC. HTR			NO C.O. or UNPWR C.O.								w/ PWRD C.O.							
						NO P.E.				w/ P.E. (pwrd fr/unit)				NO P.E.				w/ P.E. (pwrd fr/unit)			
			CRHEATER****00	Nom (kW)	FLA	MCA	MAX FUSE or HACR BRKR	DISC. SIZE		MCA	MAX FUSE or HACR BRKR	DISC. SIZE		MCA	MAX FUSE or HACR BRKR	DISC. SIZE		MCA	MAX FUSE or HACR BRKR	DISC. SIZE	
								FLA	LRA			FLA	LRA			FLA	LRA			FLA	LRA
50TCQD14	575–3–60	STD	NONE	–	–	24	30	25	136	28	30	30	140	26	30	27	138	30	35	32	142
			293A	16.5	15.9	44	45	43	152	48	50	48	156	46	50	45	154	50	50	50	158
			290A+293A	26.5	25.5	56	60	55	187	60	60	59	191	58	60	56	189	62	70	61	193
			296A	33.5	32.2	65	70	62	168	69	70	67	172	66	70	64	170	70	70	69	174
			290A+296A	43.5	41.9	77	80	73	220	81	90	78	224	79	80	75	222	82	90	80	226
			293A+296A	50.0	48.1	73	80	81	232	76	80	85	236	74	80	82	234	78	80	87	238
		MED	NONE	–	–	24	30	25	136	28	30	30	140	26	30	27	138	30	35	32	142
			293A	16.5	15.9	44	45	43	152	48	50	48	156	46	50	45	154	50	50	50	158
			290A+293A	26.5	25.5	56	60	55	187	60	60	59	191	58	60	56	189	62	70	61	193
			296A	33.5	32.2	65	70	62	168	69	70	67	172	66	70	64	170	70	70	69	174
			290A+296A	43.5	41.9	77	80	73	220	81	90	78	224	79	80	75	222	82	90	80	226
			293A+296A	50.0	48.1	73	80	81	232	76	80	85	236	74	80	82	234	78	80	87	238
		HIGH	NONE	–	–	31	35	32	148	35	40	37	152	33	40	34	150	36	40	39	154
			293A	16.5	15.9	51	60	51	164	54	60	55	168	52	60	53	166	56	60	57	170
			290A+293A	26.5	25.5	63	70	62	199	66	70	66	203	64	70	64	201	68	70	68	205
			296A	33.5	32.2	71	80	69	180	75	80	74	184	73	80	71	182	77	80	76	186
			290A+296A	43.5	41.9	83	90	81	232	87	90	85	236	85	90	82	234	89	90	87	238
			293A+296A	50.0	48.1	79	90	88	244	83	90	92	248	81	90	90	246	84	90	94	250

See Legend and Notes for Tables 40–59 on Page 63.

ELECTRICAL INFORMATION (cont)

Table 55 – 50TCQA07 - UNIT WIRE/FUSE OR HACR BREAKER SIZING DATA - 2-SPEED INDOOR FAN MOTOR

UNIT	NO M. V–Ph–HZ	IFM TYPE	ELEC. HTR			NO C.O. or UNPWR C.O.								w/ PWRD C.O.							
						NO P.E.				w/ P.E. (pwrd fr/unit)				NO P.E.				w/ P.E. (pwrd fr/unit)			
			CRHEATER ***A00	Nom (kW)	FLA	MCA	MAX FUSE or HACR BRKR	DISC. SIZE FLA	DISC. SIZE LRA	MCA	MAX FUSE or HACR BRKR	DISC. SIZE FLA	DISC. SIZE LRA	MCA	MAX FUSE or HACR BRKR	DISC. SIZE FLA	DISC. SIZE LRA	MCA	MAX FUSE or HACR BRKR	DISC. SIZE FLA	DISC. SIZE LRA
50TCQA07	208/230–3–60	DD–STD	NONE	–	–	34/33	50/50	32/32	167	35/35	50/50	35/34	169	38/38	50/50	38/38	172	40/40	50/50	40/40	174
			102A	4.9/6.5	13.6/15.6	51/53	60/60	48/50	181/183	52/55	60/60	50/52	183/185	55/58	60/60	54/56	186/188	57/59	60/60	56/58	188/190
			104B	7.9/10.5	21.9/25.3	61/65	70/70	58/61	189/192	63/67	70/70	60/63	191/194	66/70	70/80	63/67	194/197	68/72	80/80	65/69	196/199
			105A	12.0/16.0	33.4/38.5	75/81	80/90	71/76	200/206	77/83	80/90	73/79	202/208	80/86	80/90	76/82	205/211	82/88	90/90	79/84	207/213
			104B+104B	15.8/21.0	43.8/50.5	88/96	90/100	83/90	255/268	90/98	90/100	85/92	257/270	93/101	100/110	88/96	260/273	95/103	100/110	91/98	262/275
			104B+105A	19.9/26.5	55.2/63.8	103/113	110/125	96/105	277/295	104/115	100/125	98/108	279/297	107/118	110/125	101/111	282/300	109/120	110/125	104/113	284/302
		MED	NONE	–	–	35/34	50/50	34/33	193	37/36	50/50	36/35	195	40/39	50/50	40/39	198	42/41	60/60	42/41	200
			102A	4.9/6.5	13.6/15.6	52/54	60/60	50/51	207/209	54/56	60/60	52/53	209/211	57/59	60/60	55/57	212/214	59/60	60/70	58/59	214/216
			104B	7.9/10.5	21.9/25.3	62/66	70/70	59/62	215/218	64/68	70/80	62/65	217/220	67/71	80/80	65/68	220/223	69/73	80/80	67/70	222/225
			105A	12.0/16.0	33.4/38.5	77/82	80/90	73/78	226/232	79/84	80/90	75/80	228/234	82/87	90/90	78/83	231/237	84/89	90/90	80/85	233/239
			104B+104B	15.8/21.0	43.8/50.5	90/97	90/100	85/91	281/294	92/99	10/100	87/93	283/296	95/102	100/110	90/97	286/299	97/104	100/110	92/99	288/301
			104B+105A	19.9/26.5	55.2/63.8	104/114	110/125	98/107	303/321	106/116	110/125	100/109	305/323	109/119	110/125	103/112	308/326	111/121	125/125	105/114	310/328
		HIGH	NONE	–	–	37/36	50/50	37/36	217	39/38	50/50	38/38	219	42/41	60/60	42/41	222	44/43	60/60	44/43	224
			102A	4.9/6.5	13.6/15.6	54/56	60/60	52/53	231/233	56/58	60/60	55/56	233/235	59/61	70/70	58/59	236/238	61/62	70/70	60/61	238/240
			104B	7.9/10.5	21.9/25.3	65/68	70/80	62/65	239/242	67/70	80/80	64/67	241/244	69/73	80/80	67/70	244/247	71/75	80/80	70/72	246/249
			105A	12.0/16.0	33.4/38.5	79/84	80/90	75/80	250/256	81/86	90/90	77/82	252/258	84/89	90/90	81/85	255/261	86/91	90/100	83/88	257/263
			104B+104B	15.8/21.0	43.8/50.5	92/99	100/100	87/94	305/318	94/101	100/110	89/96	307/320	97/104	100/110	93/99	310/323	99/106	100/110	95/101	312/325
			104B+105A	19.9/26.5	55.2/63.8	106/116	110/125	100/109	327/345	108/118	110/125	102/111	329/347	111/121	125/125	106/114	332/350	113/123	125/125	108/117	334/352
	460–3–60	DD–STD	NONE	–	–	15	20	14	82	16	20	15	83	17	20	17	84	18	25	18	85
			106A	6.0	7.2	24	25	23	89	25	30	24	90	26	30	25	91	27	30	26	92
			108A	11.5	13.8	32	35	30	96	33	35	31	97	34	35	33	98	35	35	34	99
			109A	14.0	16.8	36	40	34	99	37	40	35	100	38	40	36	101	39	40	37	102
			108A+108A	23.0	27.7	50	50	46	137	51	60	47	138	52	60	49	139	53	60	50	140
			108A+109A	25.5	30.7	53	60	50	143	54	60	51	144	55	60	52	145	56	60	53	146
		MED	NONE	–	–	15	20	15	95	16	20	16	96	18	25	17	97	19	25	18	98
			106A	6.0	7.2	24	30	23	102	25	30	24	103	27	30	26	104	28	30	27	105
			108A	11.5	13.8	33	35	31	109	34	35	32	110	35	35	33	11	36	40	34	112
			109A	14.0	16.8	36	40	34	112	37	40	35	113	39	40	37	114	40	40	38	115
			108A+108A	23.0	27.7	50	50	47	150	51	60	48	151	52	60	49	152	53	60	50	153
			108A+109A	25.5	30.7	53	60	50	156	55	60	51	157	56	60	53	158	57	60	54	159
		HIGH	NONE	–	–	16	20	16	107	17	25	17	108	19	25	19	109	20	25	20	110
			106A	6.0	7.2	25	30	24	114	26	30	25	115	28	30	27	116	29	30	28	117
			108A	11.5	13.8	34	35	32	121	35	35	33	122	36	40	34	123	37	40	36	124
			109A	14.0	16.8	37	40	35	124	38	40	36	125	40	40	38	126	41	45	39	127
			108A+108A	23.0	27.7	51	60	48	162	52	60	49	163	53	60	50	164	54	60	52	165
			108A+109A	25.5	30.7	55	60	51	168	56	60	52	169	57	60	54	170	58	60	55	171
	575–3–60	DD–STD	NONE	–	–	13	15	12	70	15	20	14	72	15	20	14	72	16	20	16	74
		MED	NONE	–	–	14	15	13	79	16	20	16	81	16	20	15	81	17	20	18	83
		HIGH	NONE	–	–	14	15	13	79	16	20	16	81	16	20	15	81	17	20	18	83

See Legend and Notes for Tables 40–59 on Page 63.

ELECTRICAL INFORMATION (cont)

Table 56 – 50TCQD08 - UNIT WIRE/FUSE OR HACR BREAKER SIZING DATA - 2-SPEED INDOOR FAN MOTOR

UNIT	NOM. V–Ph–HZ	IFM TYPE	ELEC. HTR			NO C.O. or UNPWR C.O.								w/ PWRD C.O.							
						NO P.E.				w/ P.E. (pwrd fr/unit)				NO P.E.				w/ P.E. (pwrd fr/unit)			
			CRHEATER ***A00	Nom (kW)	FLA	MCA	MAX FUSE or HACR BRKR	DISC. SIZE FLA	DISC. SIZE LRA	MCA	MAX FUSE or HACR BRKR	DISC. SIZE FLA	DISC. SIZE LRA	MCA	MAX FUSE or HACR BRKR	DISC. SIZE FLA	DISC. SIZE LRA	MCA	MAX FUSE or HACR BRKR	DISC. SIZE FLA	DISC. SIZE LRA
50TCQD08	208/230–3–60	STD	NONE	–	–	39/39	50/50	40/40	197	43/42	50/50	45/44	201	44/43	50/50	46/46	202	47/47	60/50	50/50	206
			117A	7.8/10.4	21.7/25.0	66/70	70/70	65/69	219/222	70/74	70/80	70/73	223/226	71/75	80/80	71/74	224/227	74/78	80/80	75/79	228/231
			110A	12.0/16.0	33.4/38.5	80/87	90/90	79/84	230/236	84/90	90/90	83/89	234/240	85/91	90/100	84/90	235/241	89/95	90/100	89/94	239/245
			111A	18.6/24.8	51.7/59.7	103/113	110/125	100/109	249/257	107/117	110/125	104/113	253/261	108/118	110/125	105/114	254/262	112/122	125/125	110/119	258/266
			112A	24.0/32.0	66.7/77.0	122/135	125/150	117/129	264/274	126/139	150/150	121/133	268/278	127/140	150/150	122/134	269/279	131/143	150/150	127/138	273/283
			112A+117A	31.8/42.4	88.4/102.0	149/166	150/175	142/157	374/401	153/170	175/175	146/162	378/405	154/171	175/175	147/163	379/406	158/175	175/175	152/167	383/410
		MED	NONE	–	–	42/41	50/50	43/43	227	45/45	50/50	48/47	231	46/46	50/50	49/48	232	50/49	60/60	53/52	236
			117A	7.8/10.4	21.7/25.0	69/72	70/80	68/71	249/252	72/76	80/80	73/76	253/256	73/77	80/80	74/77	254/257	77/81	80/90	78/81	258/261
			110A	12.0/16.0	33.4/38.5	83/89	90/90	82/87	260/266	87/93	90/100	86/91	264/270	88/94	90/100	87/92	265/271	92/97	100/100	92/97	269/275
			111A	18.6/24.8	51.7/59.7	106/115	110/125	103/111	279/287	110/119	110/125	107/116	283/291	111/120	125/125	108/117	284/292	115/124	125/125	113/121	288/296
			112A	24.0/32.0	66.7/77.0	125/137	125/150	120/131	294/304	129/141	150/150	125/135	298/308	130/142	150/150	126/137	299/309	134/146	150/150	130/141	303/313
			112A+117A	31.8/42.4	88.4/102.0	152/168	175/175	145/160	404/431	156/172	175/175	150/164	408/435	157/173	175/175	151/165	409/436	161/177	175/200	155/170	413/440
		HIGH	NONE	–	–	42/41	50/50	43/43	227	45/45	50/50	48/47	231	46/46	50/50	49/48	232	50/49	60/60	53/52	236
			117A	7.8/10.4	21.7/25.0	69/72	70/80	68/71	249/252	72/76	80/80	73/76	253/256	73/77	80/80	74/77	254/257	77/81	80/90	78/81	258/261
			110A	12.0/16.0	33.4/38.5	83/89	90/90	82/87	260/266	87/93	90/100	86/91	264/270	88/94	90/100	87/92	265/271	92/97	100/100	92/97	269/275
			111A	18.6/24.8	51.7/59.7	106/115	110/125	103/111	279/287	110/119	110/125	107/116	283/291	111/120	125/125	108/117	284/292	115/124	125/125	113/121	288/296
			112A	24.0/32.0	66.7/77.0	125/137	125/150	120/131	294/304	129/141	150/150	125/135	298/308	130/142	150/150	126/137	299/309	134/146	150/150	130/141	303/313
			112A+117A	31.8/42.4	88.4/102.0	152/168	175/175	145/160	404/431	156/172	175/175	150/164	408/435	157/173	175/175	151/165	409/436	161/177	175/200	155/170	413/440
	460–3–60	STD	NONE	–	–	19	20	19	97	20	25	21	99	21	25	22	99	23	25	24	101
			116B	13.9	16.7	40	40	38	114	41	45	40	116	42	45	41	116	44	45	43	118
			113B	16.5	19.8	43	45	42	117	45	45	44	119	46	50	45	119	47	50	47	121
			114B	27.8	33.4	60	60	58	130	62	70	60	132	63	70	60	132	64	70	62	134
			115B	33.0	39.7	68	70	65	137	70	70	67	139	71	80	67	139	72	80	69	141
			128B	41.7	50.2	81	90	77	147	83	90	79	149	84	90	79	149	85	90	82	151
		MED	NONE	–	–	20	25	20	113	21	25	22	115	22	25	23	115	24	25	25	117
			116B	13.9	16.7	40	40	39	130	42	45	42	132	43	45	42	132	44	45	44	134
			113B	16.5	19.8	44	45	43	133	46	50	45	135	47	50	46	135	48	50	48	137
			114B	27.8	33.4	61	70	59	146	63	70	61	148	64	70	61	148	65	70	63	150
			115B	33.0	39.7	69	70	66	153	71	80	68	155	71	80	68	155	73	80	70	157
			128B	41.7	50.2	82	90	78	163	84	90	80	165	85	90	81	165	86	90	83	167
		HIGH	NONE	–	–	20	25	20	113	21	25	22	115	22	25	23	115	24	25	25	117
			116B	13.9	16.7	40	40	39	130	42	45	42	132	43	45	42	132	44	45	44	134
			113B	16.5	19.8	44	45	43	133	46	50	45	135	47	50	46	135	48	50	48	137
			114B	27.8	33.4	61	70	59	146	63	70	61	148	64	70	61	148	65	70	63	150
			115B	33.0	39.7	69	70	66	153	71	80	68	155	71	80	68	155	73	80	70	157
			128B	41.7	50.2	82	90	78	163	84	90	80	165	85	90	81	165	86	90	83	167
	575–3–60	STD	NONE	–	–	14	20	15	79	18	20	19	83	16	20	17	81	20	25	21	85
			118A	18.0	17.3	36	40	35	96	40	40	39	100	38	40	37	98	41	45	41	102
			119A	36.0	34.6	58	60	55	114	61	70	59	118	59	60	56	116	63	70	61	120
		MED	NONE	–	–	16	20	17	92	20	25	21	96	18	20	19	94	22	25	23	98
			118A	18.0	17.3	38	40	37	109	42	45	41	113	39	40	39	111	43	45	43	115
			119A	36.0	34.6	59	60	56	127	63	70	61	131	61	70	58	129	65	70	63	133
		HIGH	NONE	–	–	16	20	17	92	20	25	21	96	18	20	19	94	22	25	23	98
			118A	18.0	17.3	38	40	37	109	42	45	41	113	39	40	39	111	43	45	43	115
			119A	36.0	34.6	59	60	56	127	63	70	61	131	61	70	58	129	65	70	63	133

See Legend and Notes for Tables 40–59 on Page 63.

ELECTRICAL INFORMATION (cont)

Table 57 – UNIT WIRE/FUSE OR HACR BREAKER SIZING DATA - 2-SPEED INDOOR FAN MOTOR

UNIT	NOM. V–Ph–HZ	IFM TYPE	ELEC. HTR			NO C.O. or UNPWR C.O.								w/ PWRD C.O.							
						NO P.E.				w/ P.E. (pwrd fr/unit)				NO P.E.				w/ P.E. (pwrd fr/unit)			
			CRHEATER ***A00	Nom (kW)	FLA	MCA	MAX FUSE or HACR BRKR	DISC. SIZE FLA	DISC. SIZE LRA	MCA	MAX FUSE or HACR BRKR	DISC. SIZE FLA	DISC. SIZE LRA	MCA	MAX FUSE or HACR BRKR	DISC. SIZE FLA	DISC. SIZE LRA	MCA	MAX FUSE or HACR BRKR	DISC. SIZE FLA	DISC. SIZE LRA
50TCQD09	208/230–3–60	STD	NONE	–	–	41/41	50/50	43/42	212	45/45	50/50	47/47	216	46/46	50/50	48/48	217	50/49	60/60	52/52	221
			117A	7.8/10.4	21.7/25.0	68/72	70/80	68/71	234/237	72/76	80/80	72/75	238/241	73/77	80/80	73/77	239/242	77/81	80/90	77/81	243/246
			110A	12.0/16.0	33.4/38.5	83/89	90/90	81/87	245/251	87/93	90/100	85/91	249/255	88/94	90/100	86/92	250/256	91/98	100/100	91/96	254/260
			111A	18.6/24.8	51.7/59.7	106/116	110/125	102/111	264/272	110/119	110/125	106/115	268/276	111/120	125/125	108/116	269/277	114/124	125/125	112/121	273/281
			112A	24.0/32.0	66.7/77.0	124/137	125/150	119/131	279/289	128/141	150/150	124/135	283/293	129/142	150/150	125/136	284/294	133/146	150/150	129/141	288/298
			112A+117A	31.8/42.4	88.4/102.0	152/168	175/175	144/160	389/416	155/172	175/175	149/164	393/420	156/173	175/175	150/165	394/421	160/177	175/200	154/170	398/425
		MED	NONE	–	–	44/43	50/50	46/45	242	48/47	60/60	50/49	246	49/48	60/60	51/50	247	52/52	60/60	56/55	251
			117A	7.8/10.4	21.7/25.0	71/74	80/80	71/74	264/267	75/78	80/80	75/78	268/271	76/79	80/80	76/79	269/272	80/83	80/90	81/83	273/276
			110A	12.0/16.0	33.4/38.5	86/91	90/100	84/89	275/281	89/95	90/100	89/93	279/285	90/96	90/100	90/95	280/286	94/100	100/100	94/99	284/290
			111A	18.6/24.8	51.7/59.7	109/118	110/125	105/114	294/302	112/122	125/125	110/118	298/306	113/123	125/125	111/119	299/307	117/126	125/150	115/123	303/311
			112A	24.0/32.0	66.7/77.0	127/139	150/150	122/133	309/319	131/143	150/150	127/138	313/323	132/144	150/150	128/139	314/324	136/148	150/150	132/143	318/328
			112A+117A	31.8/42.4	88.4/102.0	154/171	175/175	147/162	419/446	158/174	175/175	152/167	423/450	159/175	175/175	153/168	424/451	163/179	175/200	157/172	428/455
		HIGH	NONE	–	–	44/43	50/50	46/45	242	48/47	60/60	50/49	246	49/48	60/60	51/50	247	52/52	60/60	56/55	251
			117A	7.8/10.4	21.7/25.0	71/74	80/80	71/74	264/267	75/78	80/80	75/78	268/271	76/79	80/80	76/79	269/272	80/83	80/90	81/83	273/276
			110A	12.0/16.0	33.4/38.5	86/91	90/100	84/89	275/281	89/95	90/100	89/93	279/285	90/96	90/100	90/95	280/286	94/100	100/100	94/99	284/290
			111A	18.6/24.8	51.7/59.7	109/118	110/125	105/114	294/302	112/122	125/125	110/118	298/306	113/123	125/125	111/119	299/307	117/126	125/150	115/123	303/311
			112A	24.0/32.0	66.7/77.0	127/139	150/150	122/133	309/319	131/143	150/150	127/138	313/323	132/144	150/150	128/139	314/324	136/148	150/150	132/143	318/328
			112A+117A	31.8/42.4	88.4/102.0	154/171	175/175	147/162	419/446	158/174	175/175	152/167	423/450	159/175	175/175	153/168	424/451	163/179	175/200	157/172	428/455
	460–3–60	STD	NONE	–	–	19	25	20	111	21	25	22	113	21	25	22	113	23	25	24	115
			116B	13.9	16.7	40	40	39	128	42	45	41	130	42	45	41	130	44	45	43	132
			113B	16.5	19.8	44	45	42	131	46	50	44	133	46	50	45	133	48	50	47	135
			114B	27.8	33.4	61	70	58	144	63	70	60	146	63	70	60	146	65	70	63	148
			115B	33.0	39.7	69	70	65	151	70	80	67	153	71	80	68	153	73	80	70	155
			128B	41.7	50.2	82	90	77	161	84	90	79	163	84	90	80	163	86	90	82	165
		MED	NONE	–	–	20	25	21	127	22	25	23	129	22	25	23	129	24	30	25	131
			116B	13.9	16.7	41	45	40	144	43	45	42	146	43	45	42	146	45	45	44	148
			113B	16.5	19.8	45	45	43	147	46	50	45	149	47	50	46	149	49	50	48	151
			114B	27.8	33.4	62	70	59	160	63	70	61	162	64	70	62	162	66	70	64	164
			115B	33.0	39.7	70	70	66	167	71	80	68	169	72	80	69	169	74	80	71	171
			128B	41.7	50.2	83	90	78	177	84	90	80	179	85	90	81	179	87	90	83	181
		HIGH	NONE	–	–	20	25	21	127	22	25	23	129	22	25	23	129	24	30	25	131
			116B	13.9	16.7	41	45	40	144	43	45	42	146	43	45	42	146	45	45	44	148
			113B	16.5	19.8	45	45	43	147	46	50	45	149	47	50	46	149	49	50	48	151
			114B	27.8	33.4	62	70	59	160	63	70	61	162	64	70	62	162	66	70	64	164
			115B	33.0	39.7	70	70	66	167	71	80	68	169	72	80	69	169	74	80	71	171
			128B	41.7	50.2	83	90	78	177	84	90	80	179	85	90	81	179	87	90	83	181
	575–3–60	STD	NONE	–	–	17	20	17	87	21	25	21	91	18	20	19	89	22	25	23	93
			118A	18.0	17.3	38	40	37	104	42	45	41	108	40	40	39	106	44	45	43	110
			119A	36.0	34.6	60	60	57	122	64	70	61	126	62	70	59	124	66	70	63	128
		MED	NONE	–	–	18	20	19	100	22	25	23	104	20	25	21	102	24	30	25	106
			118A	18.0	17.3	40	40	39	117	44	45	43	121	42	45	41	119	46	50	45	123
			119A	36.0	34.6	62	70	59	135	66	70	63	139	63	70	61	137	67	70	65	141
		HIGH	NONE	–	–	18	20	19	100	22	25	23	104	20	25	21	102	24	30	25	106
			118A	18.0	17.3	40	40	39	117	44	45	43	121	42	45	41	119	46	50	45	123
			119A	36.0	34.6	62	70	59	135	66	70	63	139	63	70	61	127	67	70	65	141

See Legend and Notes for Tables 40–59 on Page 63.

ELECTRICAL INFORMATION (cont)

Table 58 – UNIT WIRE/FUSE OR HACR BREAKER SIZING DATA - 2-SPEED INDOOR FAN MOTOR

UNIT	NOM. V–Ph–HZ	IFM TYPE	ELEC. HTR			NO C.O. or UNPWR C.O.								w/ PWRD C.O.							
						NO P.E.				w/ P.E. (pwrd fr/unit)				NO P.E.				w/ P.E. (pwrd fr/unit)			
			CRHEATER****00	Nom (kW)	FLA	MCA	MAX FUSE or HACR BRKR	DISC. SIZE FLA	DISC. SIZE LRA	MCA	MAX FUSE or HACR BRKR	DISC. SIZE FLA	DISC. SIZE LRA	MCA	MAX FUSE or HACR BRKR	DISC. SIZE FLA	DISC. SIZE LRA	MCA	MAX FUSE or HACR BRKR	DISC. SIZE FLA	DISC. SIZE LRA
50TCQD12	208/230–3–60	STD	NONE	–	–	49/49	60/60	52/51	279	53/53	60/60	56/56	283	54/54	60/60	57/57	284	58/58	70/70	61/61	288
			117A	7.8/10.4	21.7/25.0	76/80	80/80	76/80	301/304	80/84	80/90	81/84	305/308	81/85	90/90	82/85	306/309	85/89	90/90	86/90	310/313
			110A	12.0/16.0	33.4/38.5	91/97	100/100	90/95	312/318	95/101	100/110	94/100	316/322	96/102	100/110	95/101	317/323	100/106	100/110	100/105	321/327
			112A	24.0/32.0	66.7/77.0	133/145	150/150	128/140	346/356	136/149	150/150	133/144	350/360	137/150	150/150	134/145	351/361	141/154	150/175	138/150	355/365
			112A+117A	31.8/42.4	88.4/102.0	160/176	175/200	153/168	456/483	164/180	175/200	158/173	460/487	165/181	175/200	159/174	461/488	168/185	175/200	163/178	465/492
			112A+110A	37.6/50.0	104.2/120.3	179/169	200/175	171/190	487/520	183/173	200/200	176/194	491/524	184/174	200/200	177/195	492/525	188/178	200/200	181/199	496/529
		MED	NONE	–	–	53/52	60/60	56/55	329	57/56	70/60	60/59	333	58/57	70/70	61/60	334	62/61	70/70	66/65	338
			117A	7.8/10.4	21.7/25.0	80/83	80/90	81/83	351/354	84/87	90/90	85/88	355/358	85/88	90/90	86/89	356/359	89/92	90/100	91/93	360/363
			110A	12.0/16.0	33.4/38.5	95/100	100/100	94/99	362/368	98/104	100/110	99/103	366/372	99/105	100/110	100/104	367/373	103/109	110/110	104/109	371/377
			112A	24.0/32.0	66.7/77.0	136/148	150/150	132/143	396/406	140/152	150/175	137/148	400/410	141/153	150/175	138/149	401/411	145/157	150/175	142/153	405/415
			112A+117A	31.8/42.4	88.4/102.0	163/179	175/200	157/172	506/533	167/183	175/200	162/176	510/537	168/184	175/200	163/177	511/538	172/188	175/200	167/182	515/542
			112A+110A	37.6/50.0	104.2/120.3	183/172	200/200	176/193	537/570	187/176	200/200	180/197	541/574	188/177	200/200	181/198	542/575	192/181	200/200	185/203	546/579
		HIGH	NONE	–	–	56/55	60/60	59/58	340	60/59	70/70	63/62	344	61/60	70/70	65/63	345	64/63	70/70	69/68	349
			117A	7.8/10.4	21.7/25.0	83/86	90/90	84/87	362/365	87/90	90/90	88/91	366/369	88/91	90/100	89/92	367/370	91/95	100/100	94/97	371/374
			110A	12.0/16.0	33.4/38.5	97/103	100/110	97/102	373/379	101/107	110/110	102/107	377/383	102/108	110/110	103/108	378/384	106/112	110/125	107/112	382/388
			112A	24.0/32.0	66.7/77.0	139/151	150/175	136/147	407/417	143/155	150/175	140/151	411/421	144/156	150/175	141/152	412/422	148/160	150/175	146/156	416/426
			112A+117A	31.8/42.4	88.4/102.0	166/182	175/200	161/175	517/544	170/186	175/200	165/180	521/548	171/187	175/200	166/181	522/549	175/191	175/200	171/185	526/553
			112A+110A	37.6/50.0	104.2/120.3	186/175	200/200	179/196	548/581	190/179	200/200	183/201	552/585	191/180	200/200	184/202	553/586	195/184	200/200	189/206	557/590
	460–3–60	STD	NONE	–	–	24	30	25	134	26	30	27	136	26	30	28	136	28	30	30	138
			116B	13.9	16.7	45	45	44	151	47	50	46	153	47	50	47	153	49	50	49	155
			113B	16.5	19.8	49	50	48	154	51	60	50	156	51	60	50	156	53	60	53	158
			115B	33.0	39.7	74	80	71	174	76	80	73	176	76	80	73	176	78	80	75	178
			128B	41.7	50.2	87	90	83	184	89	90	85	186	89	90	85	186	91	100	88	188
			129B	50.0	60.1	84	90	94	194	86	90	96	196	87	90	97	196	88	90	99	198
		MED	NONE	–	–	26	30	27	159	28	30	29	161	28	30	29	161	30	35	32	163
			116B	13.9	16.7	47	50	46	176	48	50	48	178	49	50	49	178	51	60	51	180
			113B	16.5	19.8	51	60	50	179	52	60	52	181	53	60	52	181	55	60	54	183
			115B	33.0	39.7	75	80	73	199	77	80	75	201	78	80	75	201	79	80	77	203
			128B	41.7	50.2	89	90	85	209	90	90	87	211	91	100	87	211	93	100	89	213
			129B	50.0	60.1	86	90	96	219	88	90	98	221	88	90	99	221	90	100	101	223
		HIGH	NONE	–	–	27	30	29	164	29	35	31	166	29	35	31	166	31	35	33	168
			116B	13.9	16.7	48	50	48	181	50	50	50	183	50	50	50	183	52	60	52	185
			113B	16.5	19.8	52	60	51	184	54	60	53	186	54	60	54	186	56	60	56	188
			115B	33.0	39.7	77	80	74	204	79	80	76	206	79	80	77	206	81	90	79	208
			128B	41.7	50.2	90	90	86	214	92	100	88	216	92	100	89	216	94	100	91	218
			129B	50.0	60.1	87	90	98	224	89	100	100	226	90	100	100	226	91	100	102	228
	575–3–60	STD	NONE	–	–	19	25	20	107	23	25	24	111	21	25	22	109	25	30	26	113
			118A	18.0	17.3	41	45	40	124	45	45	44	128	43	45	42	126	47	50	46	130
			119A	36.0	34.6	63	70	60	142	66	70	64	146	64	70	62	144	68	70	66	148
			118A+119A	54.0	52.0	71	80	80	211	75	80	84	215	73	80	82	213	77	80	86	217
		MED	NONE	–	–	20	25	21	116	24	30	26	120	22	25	23	118	26	30	28	122
			118A	18.0	17.3	42	45	41	133	46	50	46	137	44	45	43	135	48	50	47	139
			119A	36.0	34.6	64	70	41	151	67	70	65	155	65	70	63	153	69	70	67	157
			118A+119A	54.0	52.0	72	80	81	220	76	80	85	224	74	80	83	222	78	80	87	226
		HIGH	NONE	–	–	22	25	23	130	26	30	28	134	24	30	25	132	28	30	30	136
			118A	18.0	17.3	44	45	43	147	48	50	47	151	46	50	45	149	49	50	49	153
			119A	36.0	34.6	65	70	63	165	69	70	67	169	67	70	65	167	71	80	69	171
			118A+119A	54.0	52.0	74	80	83	234	78	80	87	238	76	80	85	236	80	90	89	240

See Legend and Notes for Tables 40–59 on Page 63.

ELECTRICAL INFORMATION (cont)

Table 59 – UNIT WIRE/FUSE OR HACR BREAKER SIZING DATA - 2-SPEED INDOOR FAN MOTOR

UNIT	NOM. V–Ph–HZ	IFM TYPE	ELEC. HTR			NO C.O. or UNPWR C.O.								w/ PWRD C.O.							
						NO P.E.				w/ P.E. (pwrd fr/unit)				NO P.E.				w/ P.E. (pwrd fr/unit)			
			CRHEATER****00	Nom (kW)	FLA	MCA	MAX FUSE or HACR BRKR	DISC. SIZE		MCA	MAX FUSE or HACR BRKR	DISC. SIZE		MCA	MAX FUSE or HACR BRKR	DISC. SIZE		MCA	MAX FUSE or HACR BRKR	DISC. SIZE	
								FLA	LRA			FLA	LRA			FLA	LRA			FLA	LRA
50TCQD14	208/230–3–60	STD	NONE	–	–	64/63	80/80	67/66	363	68/67	80/80	71/70	367	69/68	80/80	72/71	368	73/72	80/80	76/76	372
			291A	12.4/16.5	34.4/39.7	107/113	110/125	106/111	397/403	111/117	125/125	111/116	401/407	112/118	125/125	112/117	402/408	116/121	125/125	116/121	406/412
			288A+291A	19.9/26.5	55.3/63.8	133/143	150/150	130/139	474/491	137/147	150/150	135/143	478/495	138/148	150/150	136/145	479/496	142/152	150/175	140/149	483/500
			294A	25.2/33.5	69.9/80.6	151/164	175/175	147/158	433/444	155/168	175/175	151/163	437/448	156/169	175/175	152/164	438/449	160/173	175/175	157/168	442/453
			288A+294A	32.7/43.5	90.7/104.7	177/194	200/200	171/186	544/572	181/198	200/200	175/190	548/576	182/199	200/200	176/192	549/577	186/203	200/225	181/196	553/581
			291A+294A	37.6/50.0	104.3/120.3	194/183	200/200	187/204	572/604	198/187	200/200	191/208	576/608	199/188	200/200	192/210	577/609	203/192	225/200	196/214	581/613
		MED	NONE	–	–	64/63	80/80	67/66	363	68/67	80/80	71/70	367	69/68	80/80	72/71	368	73/72	80/80	76/76	372
			291A	12.4/16.5	34.4/39.7	107/113	110/125	106/111	397/403	111/117	125/125	111/116	401/407	112/118	125/125	112/117	402/408	116/121	125/125	116/121	406/412
			288A+291A	19.9/26.5	55.3/63.8	133/143	150/150	130/139	474/491	137/147	150/150	135/143	478/495	138/148	150/150	136/145	479/496	142/152	150/175	140/149	483/500
			294A	25.2/33.5	69.9/80.6	151/164	175/175	147/158	433/444	155/168	175/175	151/163	437/448	156/169	175/175	152/164	438/449	160/173	175/175	157/168	442/453
			288A+294A	32.7/43.5	90.7/104.7	177/194	200/200	171/186	544/572	181/198	200/200	175/190	548/576	182/199	200/200	176/192	549/577	186/203	200/225	181/196	553/581
			291A+294A	37.6/50.0	104.3/120.3	194/183	200/200	187/204	572/604	198/187	200/200	191/208	576/608	199/188	200/200	192/210	577/609	203/192	225/200	196/214	581/613
		HIGH	NONE	–	–	76	90	80	402	80	100	85	406	81	100	86	407	84	100	90	411
			291A	12.4/16.5	34.4/39.7	119/125	125/125	120/126	436/442	123/129	125/150	124/130	440/446	124/130	125/150	125/131	441/447	127/134	150/150	130/136	445/451
			288A+291A	19.9/26.5	55.3/63.8	145/156	150/175	144/154	513/530	149/159	150/175	148/158	517/534	150/160	150/175	149/159	518/535	153/164	175/175	154/163	522/539
			294A	25.2/33.5	69.9/80.6	163/177	175/200	161/173	472/483	167/180	175/200	165/177	476/487	168/181	175/200	166/178	477/488	172/185	175/200	170/183	481/492
			288A+294A	32.7/43.5	90.7/104.7	189/207	200/225	184/201	583/611	193/210	200/225	189/205	587/615	194/211	200/225	190/206	588/616	198/215	200/225	194/210	592/620
			291A+294A	37.6/50.0	104.3/120.3	206/196	225/225	200/219	611/643	210/200	225/225	204/223	615/647	211/201	225/225	206/224	616/648	215/205	225/225	210/228	620/652
	460–3–60	STD	NONE	–	–	31	40	32	183	32	40	34	185	33	40	34	185	35	40	36	187
			292A	16.5	19.9	55	60	54	203	57	60	56	205	58	60	57	205	59	60	59	207
			289A+292A	26.5	31.9	70	70	68	247	72	80	70	249	73	80	71	249	74	80	73	251
			295A	33.5	40.3	81	90	78	223	83	90	80	225	83	90	80	225	85	90	82	227
			289A+295A	43.5	52.3	96	100	92	288	98	100	94	290	98	100	94	290	100	100	96	292
			292A+295A	50.0	60.2	91	100	101	303	93	100	103	305	93	100	103	305	95	100	105	307
		MED	NONE	–	–	31	40	32	183	32	40	34	185	33	40	34	185	35	40	36	187
			292A	16.5	19.9	55	60	54	203	57	60	56	205	58	60	57	205	59	60	59	207
			289A+292A	26.5	31.9	70	70	68	247	72	80	70	249	73	80	71	249	74	80	73	251
			295A	33.5	40.3	81	90	78	223	83	90	80	225	83	90	80	225	85	90	82	227
			289A+295A	43.5	52.3	96	100	92	288	98	100	94	290	98	100	94	290	100	100	96	292
			292A+295A	50.0	60.2	91	100	101	303	93	100	103	305	93	100	103	305	95	100	105	307
		HIGH	NONE	–	–	37	45	39	202	39	45	41	204	39	45	41	204	41	50	43	206
			292A	16.5	19.9	62	70	62	222	64	70	64	224	64	70	64	224	66	70	66	226
			289A+292A	26.5	31.9	77	80	76	266	79	80	78	268	79	80	78	268	81	90	80	270
			295A	33.5	40.3	87	90	85	242	89	90	87	244	89	90	88	244	91	100	90	246
			289A+295A	43.5	52.3	102	110	99	307	104	110	101	309	104	110	102	309	106	110	104	311
			292A+295A	50.0	60.2	97	100	108	322	99	110	110	324	99	110	111	324	101	110	113	326

See Legend and Notes for Tables 40–59 on Page 63.

ELECTRICAL INFORMATION (cont)

Table 59 - UNIT WIRE/FUSE OR HACR BREAKER SIZING DATA - 2-SPEED INDOOR FAN MOTOR (cont)

UNIT	NOM. V–Ph–HZ	IFM TYPE	ELEC. HTR			NO C.O. or UNPWR C.O.								w/ PWRD C.O.							
						NO P.E.				w/ P.E. (pwrd fr/unit)				NO P.E.				w/ P.E. (pwrd fr/unit)			
			CRHEATER****00	Nom (kW)	FLA	MCA	MAX FUSE or HACR BRKR	DISC. SIZE		MCA	MAX FUSE or HACR BRKR	DISC. SIZE		MCA	MAX FUSE or HACR BRKR	DISC. SIZE		MCA	MAX FUSE or HACR BRKR	DISC. SIZE	
								FLA	LRA			FLA	LRA			FLA	LRA			FLA	LRA
50TCQD14	575–3–60	STD	NONE	–	–	26	30	27	136	30	35	32	140	28	30	29	138	32	35	33	142
			293A	16.5	15.9	46	50	45	152	50	50	50	156	48	50	47	154	52	60	52	158
			290A+293A	26.5	25.5	58	60	56	187	62	70	61	191	60	60	58	189	64	70	63	193
			296A	33.5	32.2	66	70	64	168	70	70	69	172	68	70	66	170	72	80	70	174
			290A+296A	43.5	41.9	79	80	75	220	82	90	80	224	80	80	77	222	84	90	82	226
			293A+296A	50.0	48.1	74	80	82	232	78	80	87	236	76	80	84	234	80	90	89	238
		MED	NONE	–	–	26	30	27	136	30	35	32	140	28	30	29	138	32	35	33	142
			293A	16.5	15.9	46	50	45	152	50	50	50	156	48	50	47	154	52	60	52	158
			290A+293A	26.5	25.5	58	60	56	187	62	70	61	191	60	60	58	189	64	70	63	193
			296A	33.5	32.2	66	70	64	168	70	70	69	172	68	70	66	170	72	80	70	174
			290A+296A	43.5	41.9	79	80	75	220	82	90	80	224	80	80	77	222	84	90	82	226
			293A+296A	50.0	48.1	74	80	82	232	78	80	87	236	76	80	84	234	80	90	89	238
		HIGH	NONE	–	–	31	35	32	148	35	40	37	152	33	40	34	150	36	40	39	154
			293A	16.5	15.9	51	60	51	164	54	60	55	168	52	60	53	166	56	60	57	170
			290A+293A	26.5	25.5	63	70	62	199	66	70	66	203	64	70	64	201	68	70	68	205
			296A	33.5	32.2	71	80	69	180	75	80	74	184	73	80	71	182	77	80	76	186
			290A+296A	43.5	41.9	83	90	81	232	87	90	85	236	85	90	82	234	89	90	87	238
			293A+296A	50.0	48.1	79	90	88	244	83	90	92	248	81	90	90	246	84	90	94	250

See Legend and Notes for Tables 40–59 on Page 63.

TYPICAL WIRING DIAGRAMS

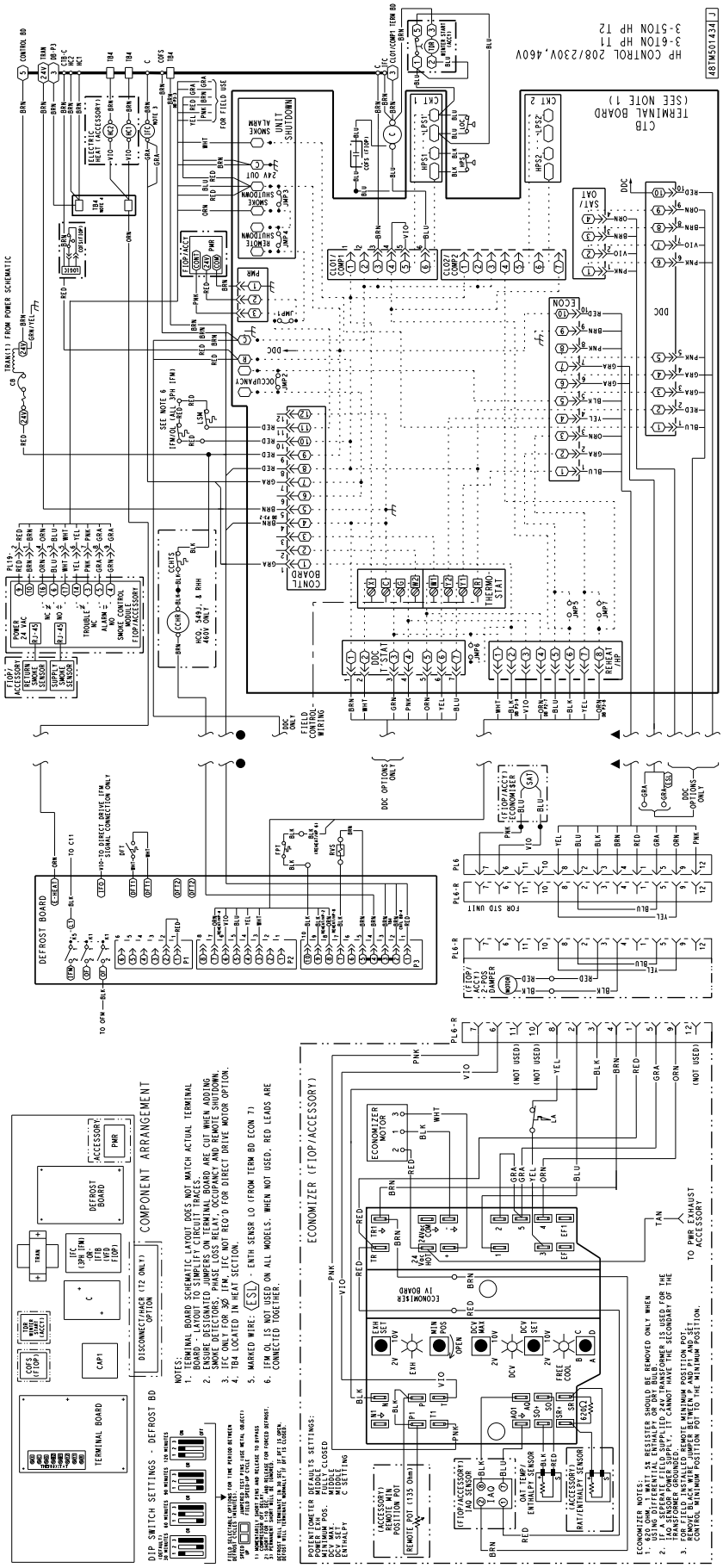

Fig. 24 - Typical Control Wiring Diagram: 1-Stage Unit with Electro-Mechanical Control Shown

NOTE: For details pertaining to a specific unit, see the Control Wiring Diagram label on the unit.

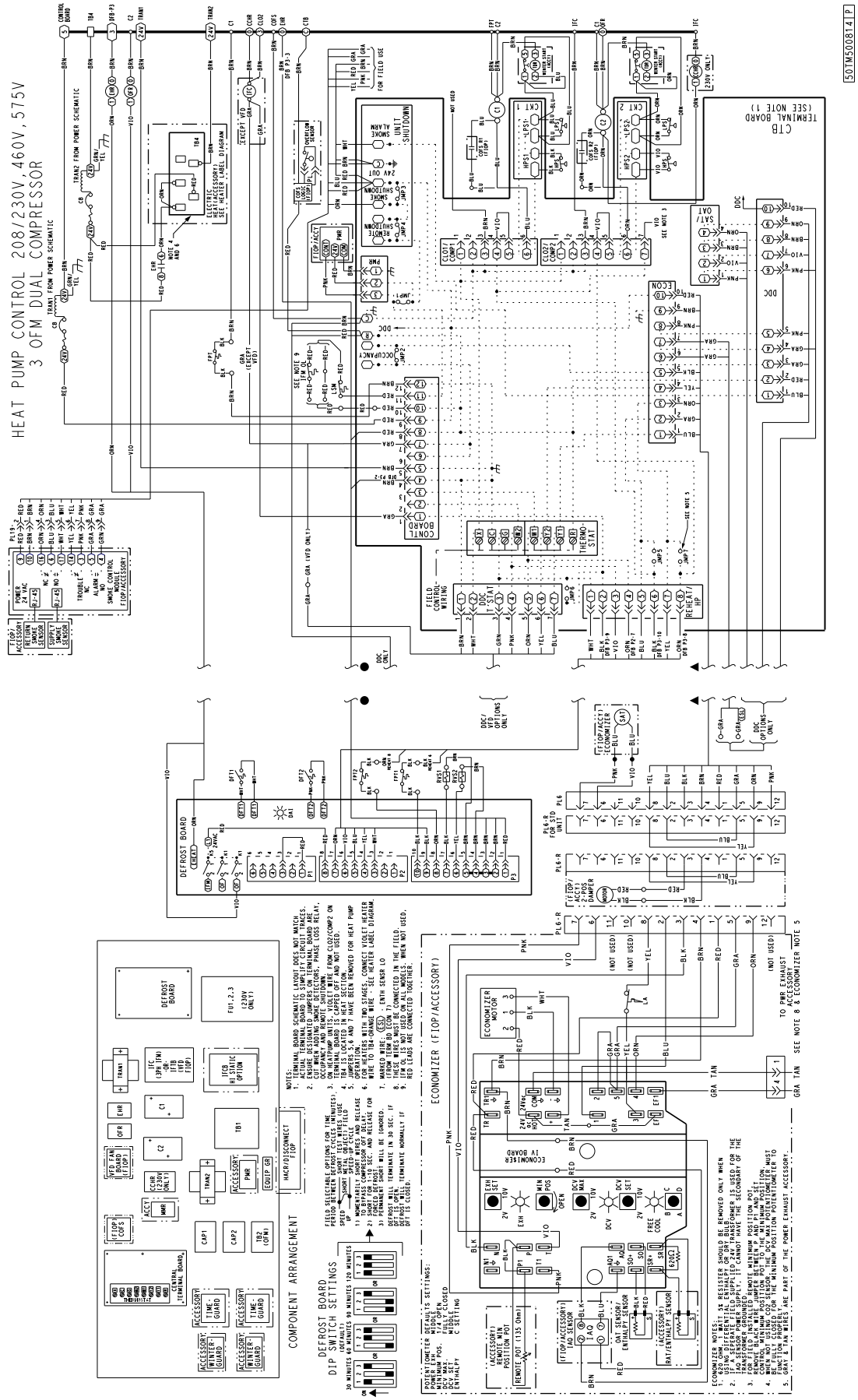

Fig. 25 – Typical Control Wiring Diagram: 2-Stage Unit with Electro-Mechanical Control Shown

NOTE: For details pertaining to a specific unit, see the Control Wiring Diagram label on the unit.

SEQUENCE OF OPERATION

Cooling, unit without economizer

Cooling (Single speed indoor fan motor) —

When thermostat calls for cooling, terminals G and Y1 are energized. The indoor fan contactor (IFC), reversing valve solenoid (RVS) and compressor contactor are energized and indoor fan motor, compressor, and outdoor fan start. The outdoor fan motor runs continuously while unit is cooling.

Two-stage models: If Stage 1 cooling does not satisfy the space load, the space temperature will rise until thermostat calls for Stage 2 cooling (Y2 closes). Defrost Board activates Stage 2 Compressor. Reversing valve 2 switches to Cooling position. Compressor 2 contactor is energized; Compressor 2 starts and Circuit 2 operates in Cooling mode.

When Cooling Stage 2 is satisfied, thermostat Y2 opens. Compressor 2 contactor is de-energized; Compressor 2 stops. Reversing Valve 2 remains energized.

When Cooling Stage 1 is satisfied, thermostat Y1 opens. Compressor 1 contactor is de-energized; Compressor 1 stops. Outdoor fan relay is de-energized; outdoor fans stop. After the Fan Delay period, the Indoor fan contactor is de-energized; indoor fan stops (unless Continuous Fan operation has been selected). Reversing Valve 1 remains energized.

Reversing valve solenoids are energized in Cooling modes. Each solenoid will remain energized until the next Heating mode is initiated for this circuit.

Cooling (2-speed indoor fan motor) —

Per ASHRAE 90.1-2016 and IECC-2015 standards, during the first stage of cooling operation the VFD will adjust the fan motor to provide 66% of the total cfm established for the unit. When a call for the second stage of cooling is required, the VFD will allow the total cfm for the unit established (100%). This is standard on all models for installation in the United States to meet U.S. Department of Energy - 2018 IEER efficiency rating.

Heating, unit without economizer

Upon a request for heating from the space thermostat, terminal W1 will be energized with 24V. The IFC, outdoor fan contactor (OFC), C1, and C2 will be energized. The indoor fan, outdoor fans, and compressor no. 1, and compressor no. 2 are energized and reversing valves are de-energized and switch position.

If the space temperature continues to fall while W1 is energized, W2 will be energized with 24V, and the heater contactor(s) (HC) will be energized, which will energize the electric heater(s).

When the space thermostat is satisfied, W2 will be de-energized first, and the electric heater(s) will be de-energized.

Upon a further rise in space temperature, W1 will be de-energized.

Two compressor models: When the thermostat calls for heating, terminal W1 is energized. Defrost Board de-energizes both reversing valve solenoids and reversing valves move to Heating position. The indoor fan contactor is energized; indoor fan motor starts. Outdoor fan relay is energized; both outdoor fan motors run. Compressor contactors C1 and C2 are energized; both refrigeration circuits operate in Heating mode.

If Stage 1 heating does not satisfy the space load, the space temperature will fall until thermostat calls for Stage 2 heating (W2 closes). Terminal W2 is energized. Defrost Board issues an output at EHEAT. Heater contactor 1 and heater contactor 2 (if installed) are energized; all electric heaters are energized.

When space heating load is partially satisfied, thermostat terminal W2 is de-energized; heater contactors are de-energized and all electric heat is terminated. Stage 1 heating continues.

When the space heating load is fully satisfied, thermostat terminal W1 is also de-energized.

Reversing valve solenoids remain de-energized until the next call for Cooling mode is initiated.

Cooling, unit with EconoMi$er® IV

When free cooling is not available, the compressors will be controlled by the zone thermostat. When free cooling is available, the outdoor air damper is modulated by the EconoMi$er IV control to provide a 50 to 55°F (10° to 13°C) mixed air temperature into the zone. As the mixed air temperature fluctuates above 55 or below 50°F (13° to 10°C), the dampers will be modulated (open or close) to bring the mixed air temperature back within control.

If mechanical cooling is utilized with free cooling, the outdoor air damper will maintain its current position at the time the compressor is started. If the increase in cooling capacity causes the mixed air temperature to drop below 45°F (7°C), then the outdoor air damper position will be decreased to the minimum position. If the mixed air temperature continues to fall, the outdoor air damper will close. Control returns to normal once the mixed air temperature rises above 48°F (9°C).

If optional power exhaust is installed, as the outdoor air damper opens and closes, the power exhaust fans will be energized and de-energized.

If field-installed accessory CO_2 sensors are connected to the EconoMi$er IV control, a demand controlled ventilation strategy will begin to operate. As the CO_2 level in the zone increases above the CO_2 setpoint, the minimum position of the damper will be increased proportionally. As the CO_2 level decreases because of the increase in fresh air, the outdoor air damper will be proportionally closed.

For EconoMi$er® IV operation, there must be a thermostat call for the fan (G). If the unit is occupied and the fan is on, the damper will operate at minimum position. Otherwise, the damper will be closed.

When the EconoMi$er IV control is in the occupied mode and a call for cooling exists (Y1 on the thermostat), the control will first check for indoor fan operation. If the fan is not on, then cooling will not be activated. If the fan is on, then the control will open the EconoMi$er IV damper to the minimum position.

On the initial power to the EconoMi$er IV control, it will take the damper up to $2^1/_2$ minutes before it begins to position itself. Any change in damper position will take up to 30 seconds to initiate. Damper movement from full closed to full open (or vice versa) will take between $1^1/_2$ and $2^1/_2$ minutes.

If free cooling can be used as determined from the appropriate changeover command (switch, dry bulb, enthalpy curve, differential dry bulb, or differential enthalpy), then the control will modulate the dampers open to maintain the mixed air temperature setpoint at 50° to 55°F (10° to 13°C).

If there is a further demand for cooling (cooling second stage — Y2 is energized), then the control will bring on compressor stage 1 to maintain the mixed air temperature setpoint. The EconoMi$er IV damper will be open at maximum position. EconoMi$er IV operation is limited to a single compressor.

2-Speed Note: When operating in ventilation mode only, the indoor fan motor will automatically adjust to 66% of the total cfm established.

Heating, unit with EconoMi$er

When the room temperature calls for heat through terminal W1, the indoor (evaporator) fan contactor (IFC) and heater contactor no. 1 (HC1) are energized and the reversing valve(s) de-energize and switches position. On units equipped for 2 stages of heat, when additional heat is needed, heater contactor no. 2 is energized through W2. The economizer damper moves to the minimum position. When the thermostat is satisfied, the damper moves to the fully closed position.

Cooling, unit with EconoMi$er2, PremierLink™ controller and a thermostat

When free cooling is not available, the compressors will be controlled by the PremierLink controller in response to the Y1 and Y2 inputs from the thermostat.

The PremierLink controller will use the following information to determine if free cooling is available:

- Indoor fan has been on for at least 30 seconds.
- The SPT, SAT, and OAT inputs must have valid readings.
- OAT must be less than 75°F (24°C).
- OAT must be less than SPT.
- Enthalpy must be LOW (may be jumpered if an enthalpy sensor not available).
- Economizer position is NOT forced.

Pre-cooling occurs when there is no call from the thermostat except G. Pre-cooling is defined as the economizer modulates to provide 70°F (21°C) supply air.

When free cooling is available the PremierLink controller will control the compressors, energize the reversing valve(s) and economizer to provide a supply air temperature determined to meet the Y1 and Y2 calls from the thermostat.

If optional power exhaust is installed, as the outdoor air damper opens and closes, the power exhaust fans will be energized and de-energized.

If field-installed accessory CO_2 sensors are connected to the PremierLink controller, a PID controlled demand ventilation strategy will begin to operate. As the CO_2 level in the zone increases above the CO_2 setpoint, the minimum position of the damper will be increased proportionally. As the CO_2 level decreases because of the increase in fresh air, the outdoor air damper will be proportionally closed.

Heating, unit with EconoMi$er2, PremierLink controller and a thermostat

When the thermostat calls for heating, terminal W1 is energized. The PremierLink control will move the economizer damper to the minimum position if there is a call for G and closed if there is a call for W1 without G. In order to prevent thermostat from short cycling, the unit is locked into the heating mode for at least 10 minutes when W1 is energized. The reversing valve solenoid(s) de-energizes and switches position.

On units equipped for two stages of heat, when additional heat is needed, W2 is energized and the electric heat (if used) comes on. When the thermostat is satisfied and W1 is de-energized, the IFM stops.

Cooling, unit with EconoMi$er2, PremierLink controller and a room sensor

When free cooling is not available, the compressors will be controlled by the PremierLink controller using a PID Error reduction calculation.

The PremierLink controller will use the following information to determine if free cooling is available:

- Indoor fan has been on for at least 30 seconds.
- The SPT, SAT, and OAT inputs must have valid readings.
- OAT must be less than 75°F (24°C).
- OAT must be less than SPT.
- Enthalpy must be LOW (may be jumpered if an enthalpy sensor is not available).
- Economizer position is NOT forced.

When free cooling is available, the outdoor air damper is positioned through the use of a Proportional Integral (PID) control process to provide a calculated supply air temperature into the zone. The supply air will maintain the space temperature between the heating and cooling setpoints.

The PremierLink™ controller will integrate the compressor stages with the economizer based on similar logic as the three routines listed in the previous section. The SASP will float up and down based on the error reduction calculations that compare space temperature and space setpoint. The reversing valves will be energized.

If an optional power exhaust is installed, as the outdoor air damper opens and closes, the power exhaust fans will be energized and de-energized.

If field- installed accessory CO_2 sensors are connected to the PremierLink control, a PID-controlled demand ventilation strategy will begin to operate. As the CO_2 level in the zone increases above the CO_2 setpoint, the minimum position of the damper will be increased proportionally. As the CO_2 level decreases because of the increase in fresh air, the outdoor air damper will be proportionally closed.

Heating, unit with EconoMi$er®2, PremierLink controller and a room sensor

Every 40 seconds the controller will calculate the required heat stages (maximum of 3) to maintain Supply Air Temperature (SAT) if the following qualifying conditions are met:

- Indoor fan has been on for at least 30 seconds.
- Cool mode is not active.
- Occupied, Temp. Compensated Start or Heat mode is active.
- SAT reading is available.
- Fire shutdown mode is not active.

If all of the above conditions are met, the number of heat stages is calculated; otherwise the required number of heat stages will be set to 0.

If the PremierLink controller determines that heat stages are required, the economizer damper will be moved to minimum position if occupied and closed if unoccupied.

Defrost

When the temperature of the outdoor coil drops below 28°F (-2°C) as sensed by the defrost thermostat (DFT2) and the defrost timer is at the end of a timed period (adjustable at 30, 60, 90 or 120 minutes), reversing valve solenoids (RVS1 and RVS2) are energized and the OFC is de-energized. This switches the position of the reversing valves and shuts off the outdoor fan. The electric heaters (if installed) will be energized.

The unit continues to defrost until the coil temperature as measured by DFT2 reaches 65°F (18°C), or the duration of defrost cycle completes a 10-minute period.

During the Defrost mode, if circuit 1 defrosts first, RVS1 will oscillate between Heating and Cooling modes until the Defrost mode is complete.

At the end of the defrost cycle, the electric heaters (if installed) will be de-energized; the reversing valves switch and the outdoor fan motor will be energized. The unit will now operate in the Heating mode.

If the space thermostat is satisfied during a defrost cycle, the unit will continue in the Defrost mode until the time or temperature constraints are satisfied.

Automatic changeover

When the system selection switch is set at AUTO. position, unit automatically changes from heating operation to cooling operation when the temperature of the conditioned space rises to the cooling level setting. When the temperature of the conditioned space falls to the heating level setting, unit automatically changes from cooling to heating operation (with a 3°F deadband in between).

Continuous air circulation

Turn unit power on. Set system control at OFF position. Set fan switch at ON position. The indoor fan contactor is energized through the thermostat switch and the indoor fan runs continuously.

Emergency heat

When the switch is on (thermostat is set to the EM HT position), compressor circuit and outdoor thermostats are bypassed, and the second stage of thermostat energizes the indoor blower and the electric resistance heaters.

GUIDE SPECIFICATIONS - 50TCQ*07-14

Note about this specification:

Carrier created this specification in “Masterformat” as published by the Construction Specification Institute. Please feel free to copy this specification directly into your building specifications.

Rooftop Packaged Heat Pump

HVAC Guide Specifications

Size Range: **6 to 12.5 Nominal Tons**

Section **Description**

23 06 80 Schedules for Decentralized HVAC Equipment

23 06 80.13 Decentralized Unitary HVAC Equipment Schedule

23 06 80.13.A. Rooftop unit schedule

1. Schedule is per the project specification requirements.

23 07 16 HVAC Equipment Insulation

23 07 16.13 Decentralized, Rooftop Units:

23 07 16.13.A. Evaporator fan compartment:

1. Interior cabinet surfaces shall be insulated with a minimum $^1/_2$-in. thick, minimum 1 $^1/_2$ lb density, flexible fiberglass insulation bonded with a phenolic binder, neoprene coated on the air side.
2. Insulation and adhesive shall meet NFPA 90A requirements for flame spread and smoke generation.
3. Unit internal insulation linings are manufactured to meet industry requirements for microbial resistance as required as part of UL-181 and ASTM C1071-12, having been evaluated in accordance with the “Mold Growth and Humidity” test in UL 181, and tests for fungi resistance in ASTM C1338 and ASTM G21. Air stream surfaces shall be evaluated in accordance with the “Erosion Test” in UL 181, as part of ASTM C1071.

23 07 16.13.B. Electric heat compartment:

1. Aluminum foil-faced fiberglass insulation shall be used.
2. Insulation and adhesive shall meet NFPA 90A requirements for flame spread and smoke generation.

23 09 13 Instrumentation and Control Devices for HVAC

23 09 13.23 Sensors and Transmitters

23 09 13.23.A. Thermostats

1. Thermostat must:
   a. have capability to energize 2 different stages of cooling, and 2 different stages of heating.
   b. include capability for occupancy scheduling.

23 09 23 Direct-digital Control system for HVAC

23 09 23.13 Decentralized, Rooftop Units:

23 09 23.13.A. PremierLink™ controller

1. Shall be ASHRAE 62 compliant.
2. Shall accept 18-32VAC input power.
3. Shall have an operating temperature range from -40°F (-40°C) to 158°F (70°C), 10% - 95% RH (non-condensing).
4. Shall include an integrated economizer controller to support an economizer with 4 to 20 mA actuator input and no microprocessor controller.
5. Controller shall accept the following inputs: space temperature, setpoint adjustment, outdoor air temperature, indoor air quality, outdoor air quality, indoor relative humidity, compressor lock-out, fire shutdown, enthalpy, fan status, remote time clock/door switch.
6. Shall accept a CO_2 sensor in the conditioned space, and be demand controlled ventilation (DCV) ready.
7. Shall provide the following outputs: Economizer, fan, cooling stage 1, cooling stage 2, heat stage 1, heat stage 2, heat stage 3/ exhaust/ reversing valve/ dehumidify/ occupied.
8. Unit shall provide surge protection for the controller through a circuit breaker.
9. Shall be Internet capable, and communicate at a Baud rate of 38.4K or faster.
10. Shall have an LED display independently showing the status of activity on the communication bus, and processor operation.

11. Shall include an EIA-485 protocol communication port, an access port for connection of either a computer or a Carrier technician tool, an EIA-485 port for network communication to intelligent space sensors and displays, and a port to connect an optional LonWorks* plug-in communications card.
12. Shall have built-in Carrier Comfort Network® (CCN) protocol, and be compatible with other CCN devices, including ComfortLink and ComfortVIEW™ controllers.
13. Shall have built-in support for Carrier technician tool.
14. Software upgrades will be accomplished by local download. Software upgrades through chip replacements are not allowed.
15. Shall be shock resistant in all planes to 5G peak, 11ms during operation, and 100G peak, 11ms during storage.
16. Shall be vibration resistant in all planes to 1.5G @ 20-300 Hz.
17. Shall support a bus length of 4000 ft max (1219 m), 60 devices per 1000 ft (305 m) section, and 1 RS-485 repeater per 1000 ft sections.

23 09 23.13.B. RTU Open Multi-protocol, direct digital controller:

1. Shall be ASHRAE 62 compliant.
2. Shall accept 18-30VAC, 50-60Hz, and consumer 15VA or less power.
3. Shall have an operating temperature range from -40°F (-40°C) to 130°F (54°C), 10% - 90% RH (non-condensing).
4. Shall include built-in protocol for BACnet† (MS/TP and PTP modes), Modbus** (RTU and ASCII), Johnson N2 and LonWorks. LonWorks Echelon processor required for all Lon applications shall be contained in separate communication board.
5. Shall allow access of up to 62 network variables (SNVT). Shall be compatible with all open controllers.
6. Baud rate Controller shall be selectable using a dipswitch.
7. Shall have an LED display independently showing the status of serial communication, running, errors, power, all digital outputs, and all analog inputs.
8. Shall accept the following inputs: space temperature, setpoint adjustment, outdoor air temperature, indoor air quality, outdoor air quality, compressor lock-out, fire shutdown, enthalpy switch, and fan status/filter status/ humidity/ remote occupancy.
9. Shall provide the following outputs: economizer, fan, cooling stage 1, cooling stage 2, heat stage 1, heat stage 2, heat stage 3/ exhaust/ reversing valve.
10. Shall have built-in surge protection circuitry through solid state polyswitches. Polyswitches shall be used on incoming power and network connections. Polyswitches will return to normal when the “trip” condition clears.
11. Shall have a battery back-up capable of a minimum of 10,000 hours of data and time clock retention during power outages.
12. Shall have built-in support for Carrier technician tool.
13. Shall include an EIA-485 protocol communication port, an access port for connection of either a computer or a Carrier technician tool, an EIA-485 port for network communication to intelligent space sensors and displays, and a port to connect an optional LonWorks communications card.
14. Software upgrades will be accomplished by either local or remote download. No software upgrades through chip replacements are allowed.

23 09 33 Electric and Electronic Control System for HVAC

23 09 33.13 Decentralized, Rooftop Units:

23 09 33.13.A. General:

1. Shall be complete with self-contained low voltage control circuit protected by a resettable circuit breaker on the 24-v transformer side. Transformer shall have 75VA capability.
2. Shall utilize color-coded wiring.
3. Shall include a central control terminal board to conveniently and safely provide connection points for vital control functions such as: smoke detectors, phase monitor, economizer, thermostat, DDC control options, loss of charge, freeze switch, high pressure switches.
4. Unit shall include a minimum of one 8-pin screw terminal connection board for connection of control wiring.
5. Shall include integrated defrost system to prevent excessive frost accumulation during heating duty, and shall be controlled as follows:
   a. Defrost shall be initiated on the basis of time and coil temperature.
   b. A 30, 60, 90, 120 minute timer shall activate the defrost cycle only if the coil temperature is low enough to indicate a heavy frost condition.

* LonWorks is a registered trademark of Echelon Corporation.
† BACnet is a registered trademark of ASHRAE (American Society of Heating, Refrigerating and Air–Conditioning Engineers).
** Modbus is a registered trademark of Schneider Electric.

c. Defrost cycle shall terminate when defrost thermostat is satisfied and shall have a positive termination time of 10 minutes.

6. Defrost system shall also include:
   a. Defrost Cycle Indicator LED.
   b. Dip switch selectable defrost time between 30, 60, 90 and 120 minutes. Factory set at 30 minutes.
   c. Molded plug connection to insure proper connection.

23 09 33.23.B. Safeties:

1. Compressor overtemperature, overcurrent.
2. Loss of charge switch.
   a. Units with 2 compressors shall have different sized connectors for the circuit 1 and circuit 2 low and high pressure switches. They shall physically prevent the cross-wiring of the safety switches between circuits 1 and 2.
   b. Loss of charge switch shall use different color wire than the high pressure switch. The purpose is to assist the installer and service technician to correctly wire and or troubleshoot the rooftop unit.
3. High-pressure switch.
   a. Units with 2 compressors shall have different sized connectors for the circuit 1 and circuit 2 low and high pressure switches. They shall physically prevent the cross-wiring of the safety switches between circuits 1 and 2.
   b. High pressure switch shall use different color wire than the low pressure switch. The purpose is to assist the installer and service technician to correctly wire and/or troubleshoot the rooftop unit.
4. Freeze protection thermostat, evaporator coil.
5. Automatic reset, motor thermal overload protector.

23 09 93 Sequence of Operations for HVAC Controls

23 09 93.13 Decentralized, Rooftop Units:

23 09 93.13.A INSERT SEQUENCE OF OPERATION

23 40 13 Panel Air Filters

23 40 13.13 Decentralized, Rooftop Units:

23 40 13.13.A. Standard filter section

1. Shall consist of factory-installed, low velocity, throwaway 2-in. thick fiberglass filters of commercially available sizes.
2. Unit shall use only one filter size. Multiple sizes are not acceptable.
3. Filters shall be accessible through an access panel with “no-tool” removal as described in the unit cabinet section of this specification (23 81 19.13.G).

23 81 19 Self-Contained Air Conditioners

23 81 19.13 Small-Capacity Self-Contained Air Conditioners (50TCQ*07-14)

23 81 19.13.A. General

1. Outdoor, rooftop mounted, electrically controlled, heating and cooling unit utilizing a(n) hermetic scroll compressor(s) for cooling duty and heat pump for heating duty.
2. Factory assembled, single piece heating and cooling rooftop unit. Contained within the unit enclosure shall be all factory wiring, piping, controls, and special features required prior to field start-up.
3. Unit shall use Puron® refrigerant.
4. Unit shall be installed in accordance with the manufacturer’s instructions.
5. Unit must be selected and installed in compliance with local, state, and federal codes.

23 81 19.13.B. Quality Assurance

1. Unit meets ASHRAE 90.1-2016 and IECC-2015 minimum efficiency requirements.
2. Unit shall be rated in accordance with AHRI Standards 340/360.
3. Unit shall be designed to conform to ASHRAE 15.
4. Unit shall be ETL-tested and certified in accordance with ANSI Z21.47 Standards and ETL-listed and certified under Canadian standards as a total package for safety requirements.
5. Insulation and adhesive shall meet NFPA 90A requirements for flame spread and smoke generation.
6. Unit internal insulation linings shall be resistant to mold growth in accordance with “mold growth and humidity” test in ASTM C1338, G21, and UL 181 or comparable test method. Air stream surfaces shall be evaluated in accordance with the “Erosion Test” in UL 181, as part of ASTM C1071.
7. Unit casing shall be capable of withstanding 500-hour salt spray exposure per ASTM B117 (scribed specimen).
8. Roof curb shall be designed to conform to NRCA Standards.

9. Unit shall be subjected to a completely automated run test on the assembly line. The data for each unit will be stored at the factory, and must be available upon request.
10. Unit shall be designed in accordance with UL Standard 1995, ETL listed including tested to withstand rain.
11. Unit shall be constructed to prevent intrusion of snow and tested to prevent snow intrusion into the control box up to 40 mph.
12. Unit shake tested to assurance level 1, ASTM D4169 to ensure shipping reliability.
13. High Efficiency Motors listed shall meet section 313 of the Energy Independence and Security Act of 2007 (EISA 2007).

23 81 19.13.C. Delivery, Storage, and Handling

1. Unit shall be stored and handled per manufacturer's recommendations.
2. Lifted by crane requires either shipping top panel or spreader bars.
3. Unit shall only be stored or positioned in the upright position.

23 81 19.13.D. Project Conditions

1. As specified in the contract.

23 81 19.13.E. Operating Characteristics

1. Unit shall be capable of starting and running at 115°F (46°C) ambient outdoor temperature, meeting maximum load criteria of AHRI Standard 340/360 at ± 10% voltage.
2. Compressor with standard controls shall be capable of operation from 25°F (-4°C), ambient outdoor temperatures. Accessory winter start kit is necessary if mechanically cooling at ambient temperatures below 25°F (-4°C).
3. Unit shall be capable of simultaneous heating duty and defrost cycle operation when using accessory electric heaters.
4. Unit shall discharge supply air vertically or horizontally as shown on contract drawings.
5. Unit shall be factory configured for vertical supply and return configurations.
6. Unit shall be field convertible from vertical to horizontal configuration.
7. Unit shall be capable of mixed operation: vertical supply with horizontal return or horizontal supply with vertical return.

23 81 19.13.F. Electrical Requirements

1. Main power supply voltage, phase, and frequency must match those required by the manufacturer.

23 81 19.13.G. Unit Cabinet

1. Unit cabinet shall be constructed of galvanized steel, and shall be bonderized and coated with a pre-painted baked enamel finish on all externally exposed surfaces.
2. Unit cabinet exterior paint shall be: film thickness, (dry) 0.003 inches minimum, gloss (per ASTM D523, 60°F / 16°C): 60, Hardness: H-2H Pencil hardness.
3. Evaporator fan compartment interior cabinet insulation shall conform to AHRI Standards 340/360 minimum exterior sweat criteria. Interior surfaces shall be insulated with a minimum $^{1}/_{2}$-in. thick, 1 lb density, flexible fiberglass insulation, neoprene coated on the air side. Aluminum foil-faced fiberglass insulation shall be used in the heat compartment.
4. Unit internal insulation linings shall be resistant to mold growth in accordance with "mold growth and humidity" test in ASTM C1338, G21, and UL 181 or comparable test method. Air stream surfaces shall be evaluated in accordance with the "Erosion Test" in UL 181, as part of ASTM C1071.
5. Base of unit shall have a minimum of three locations for thru-the-base electrical connections (factory-installed or field-installed), standard.
6. Base Rail
   a. Unit shall have base rails on a minimum of 2 sides.
   b. Holes shall be provided in the base rails for rigging shackles to facilitate maneuvering and overhead rigging.
   c. Holes shall be provided in the base rail for moving the rooftop by fork truck.
   d. Base rail shall be a minimum of 16 gauge thickness.
7. Condensate pan and connections:
   a. Shall be a sloped condensate drain pan made of a non-corrosive material.
   b. Shall comply with ASHRAE Standard 62.
   c. Shall use a $^{3}/_{4}$-in. -14 NPT drain connection, possible either through the bottom or end of the drain pan. Connection shall be made per manufacturer's recommendations.
8. Top panel:
   a. Shall be a single piece top panel on 07 thru 09 sizes, two pieces on 12 and 14 sizes.

9. Electrical Connections
   a. All unit power wiring shall enter unit cabinet at a single, factory prepared, knockout location.
   b. Thru-the-base capability.
      (1.) Standard unit shall have a thru-the-base electrical location (s) using a raised, embossed portion of the unit basepan.
      (2.) Optional, factory-approved, water-tight connection method must be used for thru-the-base electrical connections.
      (3.) No basepan penetration, other than those authorized by the manufacturer, is permitted.
10. Component access panels (standard)
   a. Cabinet panels shall be easily removable for servicing.
   b. Unit shall have one factory-installed, tool-less, removable, filter access panel.
   c. Panels covering control box, indoor fan, indoor fan motor, gas components (where applicable), and compressors shall have molded composite handles.
   d. Handles shall be UV modified, composite, permanently attached, and recessed into the panel.
   e. Screws on the vertical portion of all removable access panel shall engage into heat resistant, molded composite collars.
   f. Collars shall be removable and easily replaceable using manufacturer recommended parts.

23 81 19.13.H. Coils

1. Standard Aluminum/Copper Coils:
   a. Standard evaporator and condenser coils shall have aluminum lanced plate fins mechanically bonded to seamless internally grooved copper tubes with all joints brazed.
   b. Evaporator coils shall be leak tested to 150 psig, pressure tested to 450 psig, and qualified to UL 1995 burst test at 1775 psig.
   c. Condenser coils shall be leak tested to 150 psig, pressure tested to 650 psig, and qualified to UL 1995 burst test at 1980 psig.
2. Optional Pre-coated aluminum fin condenser coils:
   a. Shall have a durable epoxy-phenolic coating to provide protection in mildly corrosive coastal environments.
   b. Coating shall be applied to the aluminum fin stock prior to the fin stamping process to create an inert barrier between the aluminum fin and copper tube.
   c. Epoxy-phenolic barrier shall minimize galvanic action between dissimilar metals.
   d. Corrosion durability of fin stock shall be confirmed through testing to be no less than 1000 hours salt spray per ASTM B117-90.
   e. Corrosion durability of fin stock shall be confirmed through testing to have no visible corrosion after 48 hour immersion in a room temperature solution of 5% salt, 1% acetic acid.
   f. Fin stock coating shall pass 2000 hours of the following: one week exposure in the prohesion chamber followed by one week of accelerated ultraviolet light testing. Prohesion chamber: the solution shall contain 3.5% sodium chloride and 0.35% ammonium sulfate. The exposure cycle is one hour of salt fog application at ambient followed by one hour drying at 95°F (35°C).
3. Optional Copper-fin evaporator and condenser coils on all models:
   a. Shall be constructed of copper fins mechanically bonded to copper tubes and copper tube sheets.
   b. Galvanized steel tube sheets shall not be acceptable.
   c. A polymer strip shall prevent coil assembly from contacting the sheet metal coil pan to minimize potential for galvanic corrosion between coil and pan.
4. Optional E-coated aluminum-fin evaporator and condenser coils on all models:
   a. Shall have a flexible epoxy polymer coating uniformly applied to all coil surface areas without material bridging between fins.
   b. Coating process shall ensure complete coil encapsulation of tubes, fins and headers.
   c. Color shall be high gloss black with gloss per ASTM D523-89.
   d. Uniform dry film thickness from 0.8 to 1.2 mil on all surface areas including fin edges.
   e. Superior hardness characteristics of 2H per ASTM D3363-92A and cross-hatch adhesion of 4B-5B per ASTM D3359-93.
   f. Impact resistance shall be up to 160 in.-lb (ASTM D2794-93).
   g. Humidity and water immersion resistance shall be up to minimum 1000 and 250 hours respectively (ASTM D2247-92 and ASTM D870-92).
   h. Corrosion durability shall be confirmed through testing to be no less than 6000 hours salt spray per ASTM B117-90.

23 81 19.13.I. Refrigerant Components

1. Refrigerant circuit shall include the following control, safety, and maintenance features:
   a. Fixed orifice metering system shall prevent mal-distribution of two-phase refrigerant by including multiple fixed orifice devices in each refrigeration circuit. Each orifice is to be optimized to the coil circuit it serves.
   b. Refrigerant filter drier.
   c. Service gauge connections on suction and discharge lines.
   d. Pressure gauge access through a specially designed access port in the top panel of the unit.
   e. Suction line accumulator to provide protection in all operating modes from cooling, heating and reverse cycle switching.
2. There shall be gauge line access port in the top of the rooftop, covered by a black, removable plug.
   a. The plug shall be easy to remove and replace.
   b. When the plug is removed, the gauge access port shall enable maintenance personnel to route their pressure gauge lines.
   c. This gauge access port shall facilitate correct and accurate condenser pressure readings by enabling the reading with the compressor access panel on.
   d. The plug shall be made of a leak proof, UV-resistant, composite material.
3. Compressors
   a. Unit shall use one fully hermetic, scroll compressor for each independent refrigeration circuit.
   b. Models shall be available with single compressor designs on 07 models, plus additional 2 compressor (stage) models from 08-14 sizes.
   c. Compressor motors shall be cooled by refrigerant gas passing through motor windings.
   d. Compressors shall be internally protected from high discharge temperature conditions.
   e. Compressors shall be protected from an overtemperature and over-amperage conditions by an internal, motor overload device.
   f. Compressor shall be factory mounted on rubber grommets.
   g. Compressor motors shall have internal line break thermal, current overload and high pressure differential protection.
   h. Crankcase heaters shall be utilized on all models to protect compressor with specific refrigerant charge.

23 81 19.13.J. Filter Section

1. Filters access is specified in the unit cabinet section of this specification.
2. Filters shall be held in place by a pivoting filter tray, facilitating easy removal and installation.
3. Shall consist of factory-installed, low velocity, throw-away 2-in. thick fiberglass filters.
4. Filters shall be standard, commercially available sizes.
5. Only one size filter per unit is allowed.

23 81 19.13.K. Evaporator Fan and Motor

1. Evaporator fan motor:
   a. Shall have permanently lubricated bearings.
   b. Shall have inherent automatic-reset thermal overload protection or circuit breaker.
   c. Shall have a maximum continuous bhp rating for continuous duty operation; no safety factors above that rating shall be required.
2. Belt-driven Evaporator Fan:
   a. Belt drive shall include an adjustable pitch motor pulley.
   b. Shall use sealed, permanently lubricated ball-bearing type.
   c. Blower fan shall be double inlet type with forward-curved blades.
   d. Shall be constructed from steel with a finish that aids with corrosion resistance and dynamically balanced.

23 81 19.13.L. Condenser Fans and Motors

1. Condenser fan motors:
   a. Shall be a totally enclosed motor.
   b. Shall use permanently lubricated bearings.
   c. Shall have inherent thermal overload protection with an automatic reset feature.
   d. Shall use a shaft down design on all models.
2. Condenser Fans:
   a. Shall be a direct driven propeller type fan.

b. Shall have aluminum blades riveted to steel spiders that have corrosion resistant properties and shall be dynamically balanced.

23 81 19.13.M. Special Features, Options and Accessories

1. Staged Air Volume System (SAV™) for all models.
   a. Evaporator fan motor:
      (1.) Shall have permanently lubricated bearings.
      (2.) Shall have a maximum continuous bhp rating for continuous duty operation; no safety factors above that rating.
      (3.) Shall be Variable Frequency duty and 2-speed control.
      (4.) Shall contain motor shaft grounding ring to prevent electrical bearing fluting damage by safely diverting harmful shaft voltages and bearing currents to ground.
2. Variable Frequency Drive (VFD). Only available on 2-speed indoor fan motor option (SAV):
   a. Factory-supplied VFDs qualify, through ABB, for a 12-month warranty from date of commissioning or 18 months from date of sale, whichever occurs first.
   b. Shall be installed inside the unit cabinet, mounted, wired and tested.
   c. Shall contain Electromagnetic Interference (EMI) frequency protection.
   d. Insulated Gate Bi-Polar Transistors (IGBT) used to produce the output pulse width modulated (PWM) waveform, allowing for quiet motor operation.
   e. Self diagnostics with fault and power code LED indicator. Field accessory Display Kit available for further diagnostics and special setup applications.
   f. RS485 capability standard.
   g. Electronic thermal overload protection.
   h. 5% swinging chokes for harmonic reduction and improved power factor.
   i. All printed circuit boards shall be conformal coated.
3. Integrated EconoMi$er® IV, EconoMi$er2, and EconoMi$er X standard leak rate models, factory or field-installed.
   a. Integrated, gear driven opposing modulating blade design type capable of simultaneous economizer and compressor operation.
   b. Independent modules for vertical or horizontal return configuration shall be available. Vertical return modules shall be available as a factory-installed option.
   c. Damper blades shall be galvanized steel with composite gears. Plastic or composite blades on intake or return shall not be acceptable.
   d. Shall include all hardware and controls to provide free cooling with outdoor air when temperature and/or humidity are below setpoints.
   e. Shall be equipped with gear driven dampers for both the outdoor ventilation air and the return air for positive air stream control.
   f. Standard leak rate models shall be equipped with dampers not to exceed 2% leakage at 1 in. wg pressure differential.
   g. Economizer controller on EconoMi$er IV models shall be Honeywell W7212 that provides:
      (1.) Combined minimum and DCV maximum damper position potentiometers with compressor staging relay.
      (2.) Functions with solid state analog enthalpy or dry bulb changeover control sensing.
      (3.) Contain LED indicates for: when free cooling is available, when module is in DCV mode, when exhaust fan contact is closed.
   h. Economizer controller on EconoMi$er X models shall be the Honeywell W7220 that provides:
      (1.) 2-line LCD interface screen for setup, configuration and troubleshooting.
      (2.) On-board Fault Detection and Diagnostics (FDD) that senses and alerts when the economizer is not operating properly, per California Title 24.
      (3.) Sensor failure loss of communication identification.
      (4.) Automatic sensor detection.
      (5.) Capabilities for use with multiple-speed indoor fan systems.
      (6.) Utilize digital sensors: Dry bulb and Enthalpy.
   i. Economizer controller on EconoMi$er 2 models with PremierLink™ controller shall be 4-20mA design and controlled by the PremierLink controller. The PremierLink controller does not comply with California Title 24 Fault Detection and Diagnostic (FDD) requirements.
   j. Economizer controller on EconoMi$er 2 models with RTU Open controller shall be a 4-20mA design controlled directly by the RTU Open controller. RTU Open controller meets California Title 24 Fault Detection and Diagnostic (FDD) requirements.

k. Shall be capable of introducing up to 100% outdoor air.
l. Shall be equipped with a barometric relief damper capable of relieving up to 100% return air and contain seals that meet ASHRAE 90.1-2016 and IECC-2015 requirements.
m. Shall be designed to close damper(s) during loss-of-power situations with spring return built into motor.
n. Dry bulb outdoor air temperature sensor shall be provided as standard. Enthalpy sensor is also available for factory-installed economizers only. Outdoor air sensor setpoint shall be adjustable and shall range from 40 to 100°F (4 to 38°C). Additional sensor options shall be available as accessories.
o. The economizer controller shall also provide control of an accessory power exhaust unit function. Factory set at 100%, with a range of 0% to 100%.
p. The economizer shall maintain minimum airflow into the building during occupied period and provide design ventilation rate for full occupancy.
q. Dampers shall be completely closed when the unit is in the unoccupied mode.
r. Economizer controller shall accept a 2-10 Vdc CO_2 sensor input for IAQ/DCV control. In this mode, dampers shall modulate the outdoor air damper to provide ventilation based on the sensor input.
s. Compressor lockout temperature on W7220 is adjustable from -45°F to 80°F, set at a factory default of 32°F. Others shall open at 35°F (2°C) and close at 50°F (10°C).
t. Actuator shall be direct coupled to economizer gear. No linkage arms or control rods shall be acceptable.
u. Economizer controller shall provide indications when in free cooling mode, in the DCV mode, or the exhaust fan contact is closed.

4. Integrated EconoMi$er®2, and EconoMi$er X Ultra Low Leak rate models, factory or field-installed.
   a. Integrated, gear driven opposing modulating blade design type capable of simultaneous economizer and compressor operation.
   b. Independent modules for vertical or horizontal return configuration shall be available. Vertical return modules shall be available as a factory-installed option.
   c. Damper blades shall be galvanized steel with composite gears. Plastic or composite blades on intake or return shall not be acceptable.
   d. Shall include all hardware and controls to provide free cooling with outdoor air when temperature and/or humidity are below setpoints.
   e. Shall be equipped with gear driven dampers for both the outdoor ventilation air and the return air for positive air stream control.
   f. Ultra Low Leak design meets California Title 24 section 140.4 and ASHRAE 90.1-2016 and IECC-2015 requirements for 4 cfm per sq. ft. on the outside air dampers and 10 cfm per sq. ft. on the return dampers.
   g. Economizer controller on EconoMi$er X models shall be the Honeywell W7220 that provides:
      (1.) 2-line LCD interface screen for setup, configuration and troubleshooting.
      (2.) On-board Fault Detection and Diagnostics (FDD) that senses and alerts when the economizer is not operating properly, per California Title 24.
      (3.) Sensor failure loss of communication identification.
      (4.) Automatic sensor detection.
      (5.) Capabilities for use with multiple-speed indoor fan systems.
      (6.) Utilize digital sensors: Dry bulb and Enthalpy.
   h. Economizer controller on EconoMi$er 2 models with RTU Open controller shall be a 4-20mA design controlled directly by the RTU Open controller. RTU Open controller meets California Title 24 Fault Detection and Diagnostic (FDD) requirements.
   i. Shall be capable of introducing up to 100% outdoor air.
   j. Shall be equipped with a barometric relief damper capable of relieving up to 100% return air and contain seals that meet ASHRAE 90.1-2016 and IECC-2015 requirements.
   k. Shall be designed to close damper(s) during loss-of-power situations with spring return built into motor.
   l. Dry bulb outdoor air temperature sensor shall be provided as standard. Enthalpy sensor is also available for factory-installed economizers only. Outdoor air sensor setpoint shall be adjustable and shall range from 40 to 100°F (4 to 38°C). Additional sensor options shall be available as accessories.
   m. The economizer controller shall also provide control of an accessory power exhaust unit function. Factory set at 100%, with a range of 0% to 100%.
   n. The economizer shall maintain minimum airflow into the building during occupied period and provide design ventilation rate for full occupancy.
   o. Dampers shall be completely closed when the unit is in the unoccupied mode.

p. Economizer controller shall accept a 2-10 Vdc CO_2 sensor input for IAQ/DCV control. In this mode, dampers shall modulate the outdoor air damper to provide ventilation based on the sensor input.
q. Compressor lockout temperature on W7220 is adjustable from -45° F to 80° F, set at a factory default of 32° F. Others shall open at 35°F (2°C) and closes at 50°F (10°C).
r. Actuator shall be direct coupled to economizer gear. No linkage arms or control rods shall be acceptable.
s. Economizer controller shall provide indications when in free cooling mode, in the DCV mode, or the exhaust fan contact is closed.

5. Two-Position Damper (factory-installed)
   a. Damper shall be a Two-Position Damper. Damper travel shall be from the full closed position to the field adjustable %-open setpoint.
   b. Damper shall include adjustable damper travel from 25% to 100% (full open).
   c. Damper shall include single or dual blade, gear driven dampers and actuator motor.
   d. Actuator shall be direct coupled to damper gear. No linkage arms or control rods shall be acceptable.
   e. Damper will admit up to 100% outdoor air for applicable rooftop units.
   f. Damper shall close upon indoor (evaporator) fan shutoff and/or loss of power.
   g. The damper actuator shall plug into the rooftop unit's wiring harness plug. No hard wiring shall be required.
   h. Outside air hood shall include aluminum water entrainment filter
   i. Not available with Staged Air Volume (SAV™) models.
6. Head Pressure Control Package (Motormaster®)
   a. Controller shall control coil head pressure by condenser fan speed modulation or condenser fan cycling and wind baffles.
   b. Shall consist of solid state control and condenser coil temperature sensor to maintain condensing temperature between 90°F (32°C) and 110°F (43°C) at outdoor ambient temperatures down to -20°F (-29°C).
7. Condenser Coil Hail Guard Assembly
   a. Shall protect against damage from hail.
   b. Shall be louvered design.
8. Unit-Mounted, Non-Fused Disconnect Switch:
   a. Switch shall be factory-installed, internally mounted.
   b. National Electric Code (NEC) and UL approved non-fused switch shall provide unit power shutoff.
   c. Shall be accessible from outside the unit.
   d. Shall provide local shutdown and lockout capability.
   e. Sized only for the unit as ordered from the factory. Does not accommodate field-installed devices.
9. Convenience Outlet:
   a. Powered convenience outlet.
      (1.) Outlet shall be powered from main line power to the rooftop unit.
      (2.) Outlet shall be powered from line side or load side of disconnect by installing contractor, as required by code. If outlet is powered from load side of disconnect, unit electrical ratings shall be ETL certified and rated for additional outlet amperage.
      (3.) Outlet shall be factory-installed and internally mounted with easily accessible 115-v female receptacle.
      (4.) Outlet shall include 15 amp GFI receptacles with independent fuse protection.
      (5.) Voltage required to operate convenience outlet shall be provided by a factory-installed step down transformer.
      (6.) Outlet shall be accessible from outside the unit.
      (7.) Outlet shall include a field-installed "Wet in Use" cover.
   b. Factory-Installed Non-Powered convenience outlet.
      (1.) Outlet shall be powered from a separate 115-120v power source.
      (2.) A transformer shall not be included.
      (3.) Outlet shall be factory-installed and internally mounted with easily accessible 115-v female receptacle.
      (4.) Outlet shall include 15 amp GFI receptacles.
      (5.) Outlet shall be accessible from outside the unit.
      (6.) Outlet shall include a field-installed "Wet in Use" cover.
   c. Field-Installed Non-Powered convenience outlet.
      (1.) Outlet shall be powered from a separate 115-120v power source.

(2.) A transformer shall not be included.
(3.) Outlet shall be field-installed and internally mounted with easily accessible 115-v female receptacle.
(4.) Outlet shall include 20 amp GFI receptacles. This kit provides a flexible installation method which allows code compliance for height requirements of the GFCI outlet from the finished roof surface as well as the capability to relocate the outlet to a more convenient location.
(5.) Outlet shall be accessible from outside the unit.
(6.) Outlet shall include a field-installed "Wet in Use" cover.

10. Thru-the-Base Connectors:
    a. Kits shall provide connectors to permit electrical connections to be brought to the unit through the unit basepan.
    b. Minimum of three connection locations per unit.
11. Propeller Power Exhaust:
    a. Power exhaust shall be used in conjunction with an integrated economizer.
    b. Independent modules for vertical or horizontal return configurations shall be available.
    c. Horizontal power exhaust shall be mounted in return ductwork.
    d. Power exhaust shall be controlled by economizer controller operation. Exhaust fans shall be energized when dampers open past the 0-100% adjustable setpoint on the economizer control.
12. Roof Curbs (Vertical):
    a. Full perimeter roof curb with exhaust capability providing separate air streams for energy recovery from the exhaust air without supply air contamination.
    b. Formed galvanized steel with wood nailer strip and shall be capable of supporting entire unit weight.
    c. Permits installation and securing of ductwork to curb prior to mounting unit on the curb.
13. High Static Indoor Fan Motor(s) and Drive(s):
    a. High static motor(s) and drive(s) shall be factory-installed to provide additional performance range.
14. Thru-the-Bottom Utility Connectors:
    a. Kit shall provide connectors to permit gas and electrical connections to be brought to the unit through the basepan.
15. Outdoor Air Enthalpy Sensor:
    a. The outdoor air enthalpy sensor shall be used to provide single enthalpy control. When used in conjunction with a return air enthalpy sensor, the unit will provide differential enthalpy control. The sensor allows the unit to determine if outside air is suitable for free cooling.
16. Return Air Enthalpy Sensor:
    a. The return air enthalpy sensor shall be used in conjunction with an outdoor air enthalpy sensor to provide differential enthalpy control.
17. Indoor Air Quality (CO_2) Sensor:
    a. Shall be able to provide demand ventilation indoor air quality (IAQ) control.
    b. The IAQ sensor shall be available in duct mount, wall mount, or wall mount with LED display. The set-point shall have adjustment capability.
18. Smoke detectors (Factory-Installed Only):
    a. Shall be a Four-Wire Controller and Detector.
    b. Shall be environmental compensated with differential sensing for reliable, stable, and drift-free sensitivity.
    c. Shall use magnet activated test/reset sensor switches.
    d. Shall have tool-less connection terminal access.
    e. Shall have a recessed momentary switch for testing and resetting the detector.
    f. Controller shall include:
        (1.) One set of normally open alarm initiation contacts for connection to an initiating device circuit on a fire alarm control panel.
        (2.) Two Form-C auxiliary alarm relays for interface with rooftop unit or other equipment.
        (3.) One Form-C supervision (trouble) relay to control the operation of the Trouble LED on a remote test/reset station.
        (4.) Capable of direct connection to two individual detector modules.
        (5.) Can be wired to up to 14 other duct smoke detectors for multiple fan shutdown applications.
19. Horn/Strobe Annunciator
    a. Provides an audible/visual signaling device for use with factory-installed option or field-installed accessory smoke detectors.

(1.) Requires installation of a field-supplied 24-v transformer suitable for 4.2 VA (AC) or 3.0 VA (DC) per horn/strobe accessory.

(2.) Requires field-supplied electrical box, North American 1-gang box, 2-in (51 mm) x 4-in (102 mm).

(3.) Shall have a clear colored lens.

20. Winter Start kit
    a. Shall contain a bypass device around the low-pressure switch.
    b. Shall be required when mechanical cooling is required down to 25°F (-4°C).
    c. Shall not be required to operate on an economizer when below an outdoor ambient of 40°F (4°C).
21. Time Guard
    a. Shall prevent compressor short cycling by providing a 5-minute delay (±2 minutes) before restarting a compressor after shutdown for any reason.
    b. One device shall be required per compressor.
22. Electric Heat:
    a. Heating Section
        (1.) Heater element open coil resistance wire, nickel-chrome alloy, 0.29 inches inside diameter, strung through ceramic insulators mounted on metal frame. Coil ends are staked and welded to terminal screw slots.
        (2.) Heater assemblies are provided with integral fusing for protection of internal heater circuits not exceeding 48 amps each. Auto reset thermo limit controls, magnetic heater contactors (24V coil) and terminal block all mounted in electric heater control box (minimum 18 ga galvanized steel) attached to end of heater assembly.
23. Hinged Access Panels
    a. Shall provide easy access through integrated quarter turn latches.
    b. Shall be on major panels of: filters, control box, fan motor and compressor.
24. Display Kit for Variable Frequency Drive
    a. Kit allows the ability to access the VFD controller programs to provide special setup capabilities and diagnostics.
    b. Kit contains display module and communication cable.
    c. Display Kit can be permanently installed in the unit or used on any SAV™ system VFD controller as needed.
25. Condensate Overflow Switch
    a. This sensor and related controller monitors the condensate level in the drain pan and shuts down compression operation when overflow conditions occur. It includes:
        (1.) Indicator light - solid red (more than 10 seconds on water contact - compressors disabled), blinking red (sensor disconnected).
        (2.) 10 second delay to break - eliminates nuisance trips from splashing or waves in pan (sensor needs 10 seconds of constant water contact before tripping).
        (3.) Disables the compressor(s) operation when condensate plug is detected, but still allows fans to run for Economizer.
26. Manual Damper
    a. Manual Damper package shall consist of damper, air inlet screen, and rain hood which can be preset to admit up to 25 or 50% outdoor air for year-round ventilation. Not available with Staged Air Volume (SAV™) models.
27. Supply Duct Cover: (14 size only.)
    a. Required when field converting the factory standard vertical duct supply to horizontal duct supply configuration. One required per unit.
28. Disconnect Switch Bracket (14 size only)
    a. Provides a pre-engineered and sized mounting bracket for applications requiring a unit mounted fused and non-fused disconnect of greater than 100 amps. Bracket assures that no damage will occur to coils when mounting with screws and other fasteners.

©Carrier Corporation 2017
Edition Date: 11/17 518 Printed in U.S.A.

Catalog No: 50TCQ−7−14−01PD

Manufacturer reserves the right to change, at any time, specifications and designs without notice and without obligations.

Replaces: 50TCQ−4−14−03PD