Start-Up, Operation, and Maintenance Instructions

SAFETY CONSIDERATIONS

Centrifugal liquid chillers are designed to provide safe and reliable service when operated within design specifications. When operating this equipment, use good judgment and safety precautions to avoid damage to equipment and property or injury to personnel.

Be sure you understand and follow the procedures and safety precautions contained in the chiller instructions as well as those listed in this guide.

⚠ DANGER

Failure to follow these procedures will result in severe personal injury or death.

DO NOT VENT refrigerant relief valves within a building. Outlet from rupture disc or relief valve must be vented outdoors in accordance with the latest edition of ANSI/ASHRAE 15 (American National Standards Institute/American Society of Heating, Refrigerating, and Air-Conditioning Engineers). The accumulation of refrigerant in an enclosed space can displace oxygen and cause asphyxiation.

PROVIDE adequate ventilation in accordance with ANSI/ASHRAE 15, especially for enclosed and low overhead spaces. Inhalation of high concentrations of vapor is harmful and may cause heart irregularities, unconsciousness, or death. Misuse can be fatal. Vapor is heavier than air and reduces the amount of oxygen available for breathing. Product causes eye and skin irritation. Decomposition products are hazardous.

DO NOT USE OXYGEN to purge lines or to pressurize a chiller for any purpose. Oxygen gas reacts violently with oil, grease, and other common substances.

NEVER EXCEED specified test pressures, VERIFY the allowable test pressure by checking the instruction literature and the design pressures on the equipment nameplate.

DO NOT USE air for leak testing. Use only refrigerant or dry nitrogen.

DO NOT VALVE OFF any safety device.

BE SURE that all pressure relief devices are properly installed and functioning before operating any chiller.

RISK OF INJURY OR DEATH by electrocution. High voltage is present on motor leads even though the motor is not running when a solid-state or wye-delta mechanical starter is used. Open the power supply disconnect before touching motor leads or terminals.

⚠ WARNING

Failure to follow these procedures may result in personal injury or death.

DO NOT USE TORCH to remove any component. System contains oil and refrigerant under pressure.

To remove a component, wear protective gloves and goggles and proceed as follows:

a. Shut off electrical power to unit.
b. Recover refrigerant to relieve all pressure from system using both high-pressure and low pressure ports.
c. Traces of vapor should be displaced with nitrogen and the work area should be well ventilated. Refrigerant in contact with an open flame produces toxic gases.
d. Cut component connection tubing with tubing cutter and remove component from unit. Use a pan to catch any oil that may come out of the lines and as a gage for how much oil to add to the system.
e. Carefully unsweat remaining tubing stubs when necessary. Oil can ignite when exposed to torch flame.

DO NOT USE eyebolts or eyebolt holes to rig chiller sections or the entire assembly.

DO NOT work on high-voltage equipment unless you are a qualified electrician.

DO NOT WORK ON electrical components, including control panels, switches, starters, or oil heater until you are sure ALL POWER IS OFF and no residual voltage can leak from capacitors or solid-state components.

LOCK OPEN AND TAG electrical circuits during servicing. IF WORK IS INTERRUPTED, confirm that all circuits are deenergized before resuming work.

AVOID SPILLING liquid refrigerant on skin or getting it into the eyes. USE SAFETY GOGGLES. Wash any spills from the skin with soap and water. If liquid refrigerant enters the eyes, IMMEDIATELY FLUSH EYES with water and consult a physician.

NEVER APPLY an open flame or live steam to a refrigerant cylinder. Dangerous over pressure can result. When it is necessary to heat refrigerant, use only warm (110 F [43 C]) water.

DO NOT REUSE disposable (nonreturnable) cylinders or attempt to refill them. It is DANGEROUS AND ILLEGAL. When cylinder is emptied, evacuate remaining gas pressure, loosen the collar and unscrew and discard the valve stem. DO NOT INCINERATE.

CHECK THE REFRIGERANT TYPE before adding refrigerant to the chiller. The introduction of the wrong refrigerant can cause damage or malfunction to this chiller.

(Warnings continued on next page.)

Manufacturer reserves the right to discontinue, or change at any time, specifications or designs without notice and without incurring obligations.

⚠ WARNING

Operation of this equipment with refrigerants other than those cited herein should comply with ANSI/ASHRAE 15 (latest edition). Contact Carrier for further information on use of this chiller with other refrigerants.

DO NOT ATTEMPT TO REMOVE fittings, covers, etc., while chiller is under pressure or while chiller is running. Be sure pressure is at 0 psig (0 kPa) before breaking any refrigerant connection.

CAREFULLY INSPECT all relief devices, rupture discs, and other relief devices AT LEAST ONCE A YEAR. If chiller operates in a corrosive atmosphere, inspect the devices at more frequent intervals.

DO NOT ATTEMPT TO REPAIR OR RECONDITION any relief device when corrosion or build-up of foreign material (rust, dirt, scale, etc.) is found within the valve body or mechanism. Replace the device.

DO NOT install relief devices in series or backwards.

USE CARE when working near or in line with a compressed spring. Sudden release of the spring can cause it and objects in its path to act as projectiles.

⚠ CAUTION

Failure to follow these procedures may result in personal injury or damage to equipment.

DO NOT STEP on refrigerant lines. Broken lines can whip about and release refrigerant, causing personal injury.

DO NOT climb over a chiller. Use platform, catwalk, or staging. Follow safe practices when using ladders.

USE MECHANICAL EQUIPMENT (crane, hoist, etc.) to lift or move inspection covers or other heavy components. Even if components are light, use mechanical equipment when there is a risk of slipping or losing your balance.

BE AWARE that certain automatic start arrangements CAN ENGAGE THE STARTER, TOWER FAN, OR PUMPS. Open the disconnect *ahead of* the starter, tower fans, or pumps.

USE only repair or replacement parts that meet the code requirements of the original equipment.

DO NOT VENT OR DRAIN waterboxes containing industrial brines, liquid, gases, or semisolids without the permission of your process control group.

DO NOT LOOSEN waterbox cover bolts until the waterbox has been completely drained.

DO NOT LOOSEN a packing gland nut before checking that the nut has a positive thread engagement.

PERIODICALLY INSPECT all valves, fittings, and piping for corrosion, rust, leaks, or damage.

PROVIDE A DRAIN connection in the vent line near each pressure relief device to prevent a build-up of condensate or rain water.

DO NOT re-use compressor oil or any oil that has been exposed to the atmosphere. Dispose of oil per local codes and regulations.

DO NOT leave refrigerant system open to air any longer than the actual time required to service the equipment. Seal circuits being serviced and charge with dry nitrogen to prevent oil contamination when timely repairs cannot be completed.

CONTENTS

Page

SAFETY CONSIDERATIONS 1,2
INTRODUCTION 5
ABBREVIATIONS AND EXPLANATIONS 5
CHILLER FAMILIARIZATION 5-9
Chiller Information Nameplate 5
System Components 5
Cooler 7
Condenser 7
Motor-Compressor 7
Control Panel 7
Economizer (Optional) 7
Factory-Mounted Starter or Variable Frequency Drive (Optional) 7
Storage Vessel (Optional) 7
REFRIGERATION CYCLE 10,11
MOTOR AND OIL COOLING CYCLE 11
VFD COOLING CYCLE 12
LUBRICATION CYCLE 12-14
Summary 12
Details 12
Bearings 13
Oil Reclaim System 13
- PRIMARY OIL RECOVERY MODE
- SECONDARY OIL RECOVERY METHOD

STARTING EQUIPMENT 14-17
Unit-Mounted Solid-State Starter (Optional) 14
Unit-Mounted Wye-Delta Starter (Optional) 16
Unit-Mounted VFD (Optional) 16
CONTROLS 17-63
Definitions 17
- ANALOG SIGNAL
- DISCRETE SIGNAL

General 17
PIC II System Components 17
- INTERNATIONAL CHILLER VISUAL CONTROLLER (ICVC)
- INTEGRATED STARTER MODULE (ISM)
- CHILLER CONTROL MODULE (CCM)
- OIL HEATER CONTACTOR (1C)
- OIL PUMP CONTACTOR (2C)
- HOT GAS BYPASS CONTACTOR RELAY (3C) (Optional)
- CONTROL TRANSFORMERS (T1, T2)
- SENSORS

ICVC Operation and Menus 20
- GENERAL
- MODES
- ALARMS AND ALERTS
- ICVC MENU ITEMS
- BASIC ICVC OPERATIONS
- TO VIEW STATUS
- OVERRIDE OPERATIONS
- TIME SCHEDULE OPERATION
- TO VIEW AND CHANGE SET POINTS
- SERVICE OPERATION

PIC II System Functions 42
- ALARMS AND ALERTS
- ICVC MENU ITEMS
- BASIC ICVC OPERATIONS
- FLOW DETECTION
- CAPACITY CONTROL
- FIXED SPEED APPLICATIONS
- VARIABLE SPEED (VFD) APPLICATIONS
- ECW CONTROL OPTION
- CONTROL POINT DEADBAND

CONTENTS (cont)

Page

- PROPORTIONAL BANDS
- DIFFUSER CONTROL
- DEMAND LIMITING
- CHILLER TIMERS AND STARTS COUNTER
- OCCUPANCY SCHEDULE

Safety Controls 47
Pump and Fan Control 47
Shunt Trip (Option) 47
Function Loss Trip 47
Default Screen Freeze 50
Ramp Loading 51
Rampdown 51
Capacity Override 51
High Discharge Temperature Control 51
Compressor Bearing Temperature 51
Oil Sump Temperature and Pump Control 51
Oil Cooler 53
Remote Start/Stop Controls 53
Spare Safety and Spare Temperature Inputs 53
Alarm (Trip) Output Contacts 53
Refrigerant Leak Detector 53
Kilowatt Output 53
Remote Reset of Alarms 53
Condenser Pump Control 53
Condenser Freeze Prevention 54
Evaporator Freeze Protection 54
Tower Fan Relay Low and High 54
Auto. Restart After Power Failure 54
Fast Power Source Transfers 55
Water/Brine Reset 55

- RESET TYPE 1
- RESET TYPE 2
- RESET TYPE 3

Demand Limit Control Option 55
Surge Prevention — Constant Flow and Variable Primary Flow (VPF) 55
Hot Gas Bypass (Optional) Algorithm 55
Surge Protection (Fixed Speed Chiller) 56
Surge Prevention Algorithm with VFD 56
Surge Protection (VFD Chiller) 57
VFD Start-Up Speed Control 57
Head Pressure Reference Output 57
Lead/Lag Control 58

- COMMON POINT SENSOR USAGE AND INSTALLATION
- CHILLER COMMUNICATION WIRING
- LEAD/LAG OPERATION
- FAULTED CHILLER OPERATION
- LOAD BALANCING
- AUTO. RESTART AFTER POWER FAILURE

Ice Build Control 60

- ICE BUILD INITIATION
- START-UP/RECYCLE OPERATION
- TEMPERATURE CONTROL DURING ICE BUILD
- TERMINATION OF ICE BUILD
- RETURN TO NON-ICE BUILD OPERATIONS

Attach to Network Device Control 61

- ATTACHING TO OTHER CCN MODULES

Service Operation 62

- TO ACCESS THE SERVICE SCREENS
- TO LOG OUT OF NETWORK DEVICE
- TIME BROADCAST ENABLE
- HOLIDAY SCHEDULING
- DAYLIGHT SAVING TIME CONFIGURATION

START-UP/SHUTDOWN/RECYCLE SEQUENCE 63-66
Local Start-Up 63
Shutdown Sequence 65
Automatic Soft Stop Amps Threshold 65

Page

Chilled Water Recycle Mode 65
Safety Shutdown 66
BEFORE INITIAL START-UP 66-84
Job Data Required 66
Equipment Required 66
Using the Optional Storage Tank and Pumpout System 66
Remove Shipping Packaging 66
Open Oil Circuit Valves 66
Tighten All Gasketed Joints and Guide Vane Shaft Packing 66
Check Chiller Tightness 66
Refrigerant Tracer 66
Leak Test Chiller 67
Standing Vacuum Test 70
Chiller Dehydration 70
Inspect Water Piping 70
Check Optional Pumpout Compressor Water Piping 71
Check Relief Valves 71
Inspect Wiring 71
Carrier Comfort Network® Interface 71
Check Starter 72

- MECHANICAL STARTER
- BENSHAW, INC. RediStart MX3™ SOLID-STATE STARTER
- VFD STARTER

Oil Charge 72
Power Up the Controls and Check the Oil Heater 72

- SOFTWARE VERSION

Software Configuration 73
Input the Design Set Points 73
Input the Local Occupied Schedule (OCCPC01S) 73
Input Service Configurations 73

- PASSWORD
- INPUT TIME AND DATE
- CHANGE ICVC CONFIGURATION IF NECESSARY
- TO CHANGE THE PASSWORD
- TO CHANGE THE ICVC DISPLAY FROM ENGLISH TO METRIC UNITS
- CHANGE LANGUAGE
- MODIFY CONTROLLER IDENTIFICATION IF NECESSARY
- INPUT EQUIPMENT SERVICE PARAMETERS IF NECESSARY
- CHANGE THE BENSHAW, INC., RediStart MX3 SOFTWARE CONFIGURATION IF NECESSARY

VFD Field Set Up and Verification 74

- LABEL LOCATIONS
- DRIVE PROTECTION AND OTHER INCOMING WIRING
- VFD CONTROL VERIFICATION (Non-Running)
- VFD CONTROL VERIFICATION (Running)
- HAND CALCULATE SURGE PREVENTION CONFIGURATIONS
- CONFIGURE DIFFUSER CONTROL IF NECESSARY
- MODIFY EQUIPMENT CONFIGURATION IF NECESSARY

Perform a Control Test 80

- GUIDE VANE ACTUATOR CALIBRATION
- COOLER AND CONDENSER PRESSURE TRANSDUCER AND WATERSIDE FLOW DEVICE CALIBRATION

CONTENTS (cont)

Page

- OPTIONAL THERMAL DISPERSION FLOW SWITCH CALIBRATION

Check Optional Pumpout System Controls and Compressor 82
High Altitude Locations 82
Charge Refrigerant Into Chiller 82
- CHILLER EQUALIZATION WITHOUT A PUMPOUT UNIT
- CHILLER EQUALIZATION WITH PUMPOUT UNIT
- TRIMMING REFRIGERANT CHARGE

INITIAL START-UP 84-86
Preparation 84
Dry Run to Test Start-Up Sequence 84
Check Motor Rotation 85
Check Oil Pressure and Compressor Stop 85
To Prevent Accidental Start-Up 85
Check Chiller Operating Condition 85
Instruct the Customer Operator 85
- COOLER-CONDENSER
- OPTIONAL PUMPOUT STORAGE TANK AND PUMPOUT SYSTEM
- MOTOR COMPRESSOR ASSEMBLY
- MOTOR COMPRESSOR LUBRICATION SYSTEM
- CONTROL SYSTEM
- AUXILIARY EQUIPMENT
- DESCRIBE CHILLER CYCLES
- REVIEW MAINTENANCE
- SAFETY DEVICES AND PROCEDURES
- CHECK OPERATOR KNOWLEDGE
- REVIEW THE START-UP, OPERATION, AND MAINTENANCE MANUAL

OPERATING INSTRUCTIONS 86,87
Operator Duties 86
Prepare the Chiller for Start-Up 86
To Start the Chiller 86
Check the Running System 86
To Stop the Chiller 86
After Limited Shutdown 86
Preparation for Extended Shutdown 86
After Extended Shutdown 86
Cold Weather Operation 86
Manual Guide Vane Operation 87
Refrigeration Log 87

PUMPOUT AND REFRIGERANT TRANSFER PROCEDURES 87-92
Preparation 87
Operating the Optional Pumpout Unit 89
- TO READ REFRIGERANT PRESSURES
- POSITIVE PRESSURE CHILLERS WITH STORAGE TANKS
- CHILLERS WITH ISOLATION VALVES
- DISTILLING THE REFRIGERANT

GENERAL MAINTENANCE 92,93
Refrigerant Properties 92
Adding Refrigerant 92
Adjusting the Refrigerant Charge 92
Refrigerant Leak Testing 92
Leak Rate 92
Test After Service, Repair, or Major Leak 92
- TESTING WITH REFRIGERANT TRACER
- TESTING WITHOUT REFRIGERANT TRACER
- TO PRESSURIZE WITH DRY NITROGEN

Repair the Leak, Retest, and Apply Standing Vacuum Test 92
Checking Guide Vane Linkage 92
Trim Refrigerant Charge 93

Page

WEEKLY MAINTENANCE 93
Check the Lubrication System 93

SCHEDULED MAINTENANCE 93-97
Service Ontime 93
Inspect the Control Panel 93
Check Safety and Operating Controls Monthly 94
Changing Oil Filter 94
Oil Specification 94
Oil Changes 94
- TO CHANGE THE OIL

Refrigerant Filter 94
Oil Reclaim Filter 94
Inspect Refrigerant Float System 94
- ECONOMIZER FLOAT SYSTEM
- ECONOMIZER DAMPER VALVE

Inspect Relief Valves and Piping 95
Compressor Bearing and Gear Maintenance 95
Inspect the Heat Exchanger Tubes and Flow Devices 96
- COOLER AND OPTIONAL FLOW DEVICES
- CONDENSER AND OPTIONAL FLOW DEVICES

Water Leaks 96
Water Treatment 96
Inspect the Starting Equipment 96
Recalibrate Pressure Transducers 96
Optional Pumpout System Maintenance 96
- OPTIONAL PUMPOUT COMPRESSOR OIL CHARGE
- OPTIONAL PUMPOUT SAFETY CONTROL SETTINGS

Ordering Replacement Chiller Parts 97

TROUBLESHOOTING GUIDE 97-176
Overview 97
Checking Display Messages 97
Checking Temperature Sensors 97
- RESISTANCE CHECK
- VOLTAGE DROP
- CHECK SENSOR ACCURACY
- DUAL TEMPERATURE SENSORS

Checking Pressure Transducers 114
- TRANSDUCER REPLACEMENT
- COOLER AND CONDENSER PRESSURE TRANSDUCER AND OPTIONAL WATERSIDE FLOW DEVICE CALIBRATION

Control Algorithms Checkout Procedure 115
Control Test 115
Control Modules 115
- RED LED (Labeled as STAT)
- GREEN LED (Labeled as COM)

Notes on Module Operation 115
Chiller Control Module (CCM) 115
- INPUTS
- OUTPUTS

Integrated Starter Module 115
- INPUTS
- OUTPUTS

Replacing Defective Processor Modules 118
- INSTALLATION

Solid-State Starters 118
- TESTING SILICON CONTROL RECTIFIERS IN BENSHAW, INC. SOLID-STATE STARTERS
- SCR REMOVAL/INSTALLATION

Physical Data 119

APPENDIX A — ICVC PARAMETER INDEX . . 177-183

CONTENTS (cont)

Page
APPENDIX B — LEAD/LAG WIRING 184,185
APPENDIX C — MAINTENANCE SUMMARY AND LOG SHEETS 186-188
APPENDIX D — BACNET COMMUNICATION OPTION 189-195
INDEX 196
INITIAL START-UP CHECKLIST FOR 19XR, XRV HERMETIC CENTRIFUGAL LIQUID CHILLER . . . . . CL-1 to CL-14

INTRODUCTION

Prior to initial start-up of the 19XR unit, those involved in the start-up, operation, and maintenance should be thoroughly familiar with these instructions and other necessary job data. This book is outlined to familiarize those involved in the start-up, operation and maintenance of the unit with the control system before performing start-up procedures. Procedures in this manual are arranged in the sequence required for proper chiller start-up and operation.

⚠ CAUTION

This unit uses a microprocessor control system. Do not short or jumper between terminations on circuit boards or modules; control or board failure may result.

Be aware of electrostatic discharge (static electricity) when handling or making contact with circuit boards or module connections. Always touch a chassis (grounded) part to dissipate body electrostatic charge before working inside control center.

Use extreme care when handling tools near boards and when connecting or disconnecting terminal plugs. Circuit boards can easily be damaged. Always hold boards by the edges and avoid touching components and connections.

This equipment uses, and can radiate, radio frequency energy. If not installed and used in accordance with the instruction manual, it may cause interference to radio communications. It has been tested and found to comply with the limits for a Class A computing device pursuant to International Standard in North America EN 61000-2/3 which are designed to provide reasonable protection against such interference when operated in a commercial environment. Operation of this equipment in a residential area is likely to cause interference, in which case the user, at his own expense, will be required to take whatever measures may be required to correct the interference.

Always store and transport replacement or defective boards in anti-static shipping bag.

⚠ CAUTION

Do NOT punch holes or drill into the top surface of the VFD (variable frequency drive) enclosure for field wiring. Knockouts are provided on the side of the VFD enclosure for field wiring connections. The top panel of the enclosure must be removable for servicing the power module.

⚠ CAUTION

PROVIDE MACHINE PROTECTION. Store machine and starter indoors, protected from construction dirt and moisture. Inspect under shipping tarps, bags or crates to be sure water has not collected during transit. Keep protective shipping covers in place until machine is ready for installation.

⚠ CAUTION

WHEN FLUSHING THE WATER SYSTEMS isolate the chiller from the water circuits to prevent damage to the heat exchanger tubes.

ABBREVIATIONS AND EXPLANATIONS

Frequently used abbreviations in this manual include:

CCM — Chiller Control Module
CCN — Carrier Comfort Network®
CCW — Counterclockwise
CW — Clockwise
ECDW — Entering Condenser Water
ECW — Entering Chilled Water
EMS — Energy Management System
HGBP — Hot Gas Bypass
I/O — Input/Output
ICVC — International Chiller Visual Controller
ISM — Integrated Starter Module
LCD — Liquid Crystal Display
LCDW — Leaving Condenser Water
LCW — Leaving Chilled Water
LED — Light-Emitting Diode
OLTA — Overload Trip Amps
PIC II — Product Integrated Controls II
RLA — Rated Load Amps
SCR — Silicon Controlled Rectifier
SI — International System of Units
TXV — Thermostatic Expansion Valve
VFD — Variable Frequency Drive

Words printed in all capital letters or in italics may be viewed on the International Chiller Visual Controller (ICVC) (e.g., LOCAL, CCN, ALARM, etc.).

Words printed in *both* all capital letters and italics can also be viewed on the ICVC and are parameters (e.g., *CONTROL MODE, COMPRESSOR START RELAY, ICE BUILD OPTION*, etc.) with associated values (e.g., modes, temperatures, percentages, pressures, on, off, etc.).

Words printed in all capital letters and in a box represent softkeys on the ICVC control panel (e.g., ENTER, EXIT, INCREASE, QUIT, etc.).

Factory-installed additional components are referred to as options in this manual; factory-supplied but field-installed additional components are referred to as accessories.

The chiller software part number of the 19XR unit is located on the back of the ICVC.

CHILLER FAMILIARIZATION (Fig. 1-3)

Chiller Information Nameplate — The information nameplate is located on the right side of the chiller control panel.

System Components — The components include the cooler and condenser heat exchangers in separate vessels, motor-compressor, lubrication package, control panel, economizer (optional) and motor starter. All connections from pressure vessels have external threads to enable each component to be pressure tested with a threaded pipe cap during factory assembly.

19XR– 52 51 4 7 3 DG H 64 –

Description
19XR– — High Efficiency Semi-Hermetic Centrifugal Liquid Chiller
19XRV — High Efficiency Semi-Hermetic Centrifugal Liquid Chiller with Unit-Mounted VFD

Cooler Size*
10-12 (Frame 1)
15-17 (Frame 1)
20-22 (Frame 2)
30-32 (Frame 3)
35-37 (Frame 3)
40-42 (Frame 4)
45-47 (Frame 4)
50-54 (Frame 5)
5A-5C (Frame 5)†
55-59 (Frame 5)
5F-5H (Frame 5)†
5K-5R (Frame 5)**
5T-5Z (Frame 5)**
60-64 (Frame 6)
6K-6R (Frame 6)**
65-69 (Frame 6)
6T-6Z (Frame 6)**
70-74 (Frame 7)
7K-7R (Frame 7)**
75-79 (Frame 7)
7T-7Z (Frame 7)**
80-84 (Frame 8)
8K-8R (Frame 8)**
85-89 (Frame 8)
8T-8Z (Frame 8)**

Condenser Size*
10-12 (Frame 1)
15-17 (Frame 1)
20-22 (Frame 2)
30-32 (Frame 3)
35-37 (Frame 3)
40-42 (Frame 4)
45-47 (Frame 4)
50-54 (Frame 5)
55-59 (Frame 5)
60-64 (Frame 6)
65-69 (Frame 6)
70-74 (Frame 7)
75-79 (Frame 7)
80-84 (Frame 8)
85-89 (Frame 8)

Special Order Indicator
– — Standard
S — Special Order

Motor Voltage Code

Code	Volts-Phase-Hertz
60	200-3-60
61	230-3-60
62	380-3-60
63	416-3-60
64	460-3-60
65	575-3-60
66	2400-3-60
67	3300-3-60
68	4160-3-60
69	6900-3-60
50	230-3-50
52	400-3-50
53	3000-3-50
54	3300-3-50
55	6300-3-50
5A	10000-3-50
5B	11000-3-50
6A	11000-3-60
6B	10000-3-60
6C	13800-3-60

Motor Efficiency Code
Compressor Frame 2, 3, 4, 5
H — High Efficiency
S — Standard Efficiency

Compressor Frame E
A,B,C,D,E— A-E Gear Ratio

Motor Code††

Impeller Diameter

Impeller Shroud

Compressor Frame
2, 3, 4, 5 — Single-Stage
E — Two-Stage

MODEL NUMBER NOMENCLATURE

27 10 Q 19843

Week of Year

Year of Manufacture

Unique Number

Place of Manufacture

SERIAL NUMBER BREAKDOWN

*Frame sizes 1 through 6 available on single-stage units only.
†Refer to 19XR, 19XRV Computer Selection Program for details on these sizes.
** Frame sizes with K-R and T-Z are with 1 in. OD evaporator tubing.
††Refer to the 19XR, 19XRV Computer Selection Program for motor size details.

Fig. 1 — 19XR,XRV Identification

Cooler — This vessel (also known as the evaporator) is located underneath the compressor. The cooler is maintained at lower temperature/pressure so evaporating refrigerant can remove heat from water flowing through its internal tubes.

Condenser — The condenser operates at a higher temperature/pressure than the cooler and has water flowing through its internal tubes in order to remove heat from the refrigerant.

Motor-Compressor — This component maintains system temperature and pressure differences and moves the heat-carrying refrigerant from the cooler to the condenser. Compressor Frames 2-5 are single-stage compressors with one impeller. Frame E compressors are two-stage compressors with two impellers.

Control Panel — The control panel is the user interface for controlling the chiller. It regulates the chiller's capacity as required to maintain proper leaving chilled water temperature. The control panel:

- registers cooler, condenser, and lubricating system pressures
- shows chiller operating condition and alarm shutdown conditions
- records the total chiller operating hours
- sequences chiller start, stop, and recycle under microprocessor control
- displays status of motor starter
- provides access to other CCN (Carrier Comfort Network®) devices and energy management systems
- Languages that may be pre-installed at factory include: English, Chinese, Japanese, and Korean.
- International language translator (ILT) is available for conversion of extended ASCII characters.

Economizer (Optional) — An economizer, along with a two-stage compressor, allows for higher lift applications. The economizer is a separate vessel in the flow path after the condenser that improves the refrigerant cycle by allowing a small amount of refrigerant to flash into vapor. This phase change decreases the temperature of the remaining liquid refrigerant. The vapor is drawn into the second stage of the compressor, which saves energy because the refrigerant does not have to be compressed by both stages.

Factory-Mounted Starter or Variable Frequency Drive (Optional) — The starter allows for the proper start and disconnect of electrical energy for the compressor-motor, oil pump, oil heater, and control panel.

Storage Vessel (Optional) — There are 2 sizes of storage vessels available. The vessels have double relief valves, a magnetically-coupled dial-type refrigerant level gage, a 1-in. FPT drain valve, and a $^1/_2$-in. male flare vapor connection for the pumpout unit.

NOTE: If a storage vessel is not used at the jobsite, factory-installed isolation valves on the chiller may be used to isolate the chiller charge in either the cooler or condenser. An optional pumpout system is used to transfer refrigerant from vessel to vessel.

FRONT VIEW

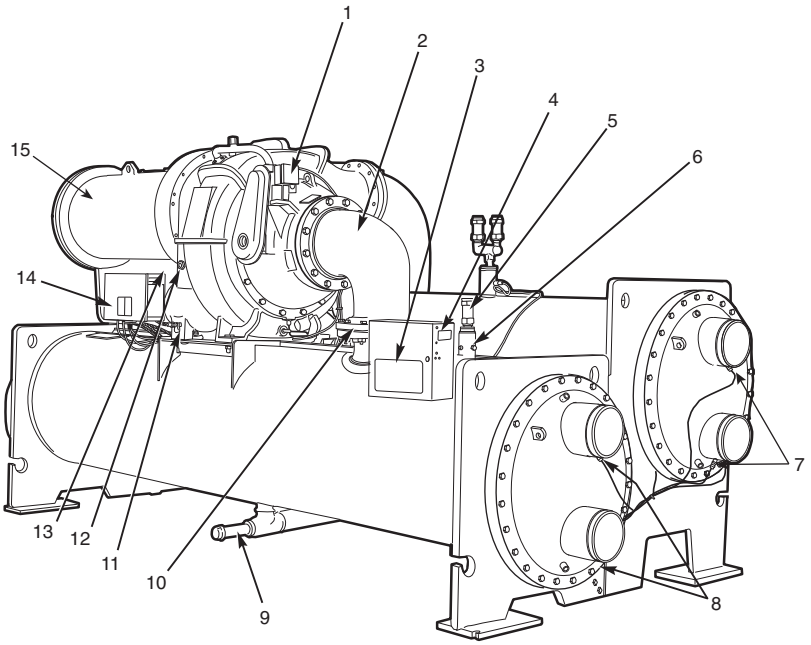

LEGEND

1 — Guide Vane Actuator
2 — Suction Elbow
3 — International Chiller Visual Control (ICVC)
4 — Chiller Identification Nameplate
5 — Cooler Auto Reset Relief Valves
6 — Cooler Pressure Transducer
7 — Condenser In/Out Temperature Thermistors
8 — Cooler In/Out Temperature Thermistors
9 — Refrigerant Storage Tank Connection Valve
10 — Typical Flange Connection
11 — Oil Drain Valve
12 — Oil Level Sight Glasses
13 — Refrigerant Oil Cooler (Hidden)
14 — Auxiliary Power Panel
15 — Motor Housing

REAR VIEW

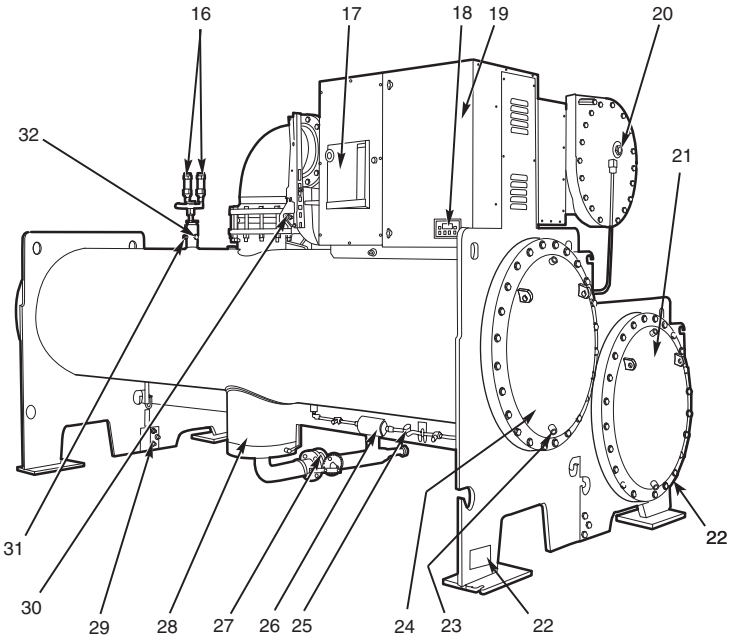

LEGEND

16 — Condenser Auto. Reset Relief Valves
17 — Motor Circuit Breaker
18 — Solid-State Starter Control Display
19 — Unit-Mounted Starter or VFD (Optional) Solid-State Starter Shown
20 — Motor Sight Glass
21 — Cooler Return-End Waterbox Cover
22 — ASME Nameplate (One Hidden)
23 — Typical Waterbox Drain Port
24 — Condenser Return-End Waterbox Cover
25 — Refrigerant Moisture/Flow Indicator
26 — Refrigerant Filter/Drier
27 — Liquid Line Isolation Valve (Optional)
28 — Liquid Float Valve Chamber
29 — Vessel Take-Apart Connector
30 — Discharge Isolation Valve (Optional)
31 — Condenser Pressure Transducer
32 — Refrigerant Charging Valve/Pumpout Connection

Fig. 2 — 19XR,XRV Single-Stage Compressor

FRONT VIEW

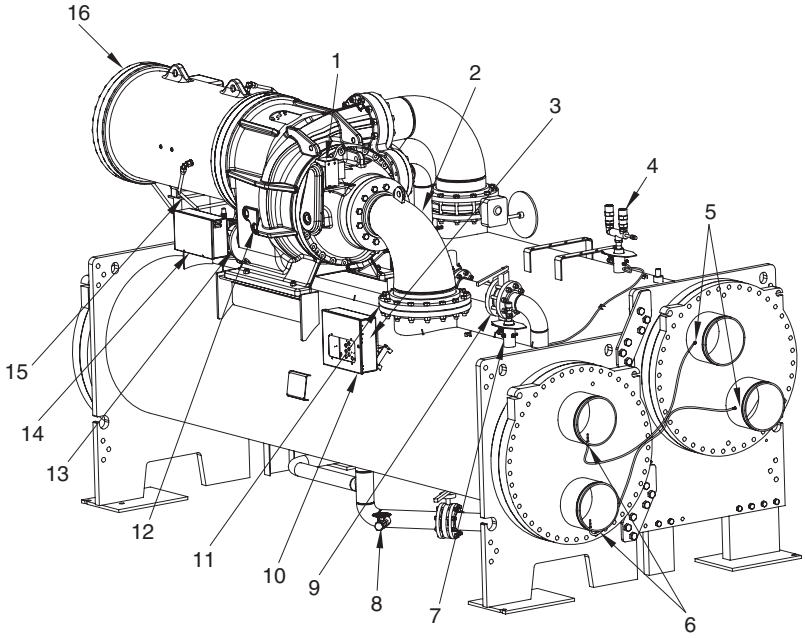

LEGEND

1 — Guide Vane Actuator
2 — Suction Elbow
3 — Chiller Identification Nameplate
4 — Condenser Auto Reset Relief Valves
5 — Condenser In/Out Temperature Thermistors
6 — Cooler In/Out Temperature Thermistors
7 — Cooler Pressure Transducer
8 — Refrigerant Storage Tank Connection Valve
9 — Refrigerant Isolation Valve
10 — Chiller Visual Controller/ International Chiller Visual Control (ICVC)
11 — Typical Flange Connection
12 — Oil Level Sight Glasses
13 — Oil Drain Charging Valve
14 — Auxiliary Power Panel
15 — Refrigerant Oil Cooler (Hidden)
16 — Compressor Motor Housing

REAR VIEW

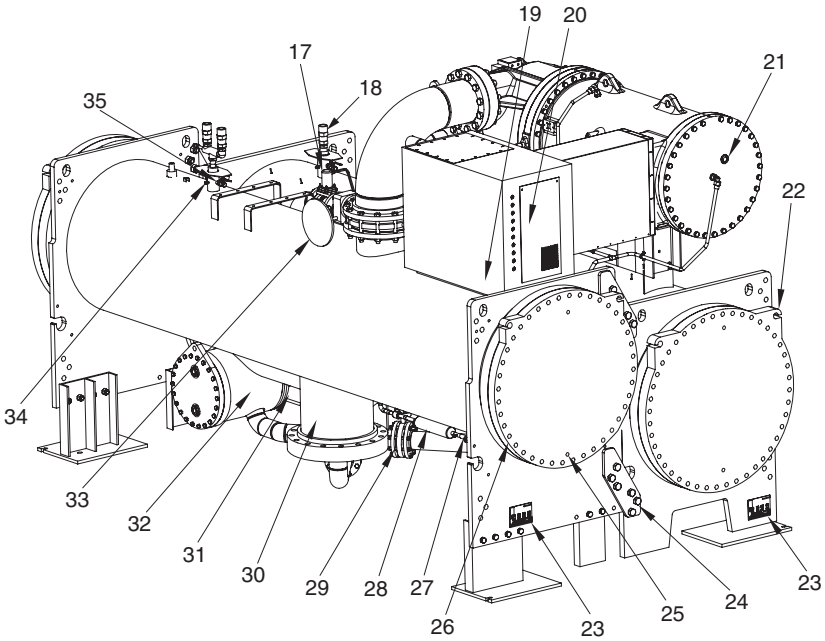

LEGEND

17 — Damper Valve
18 — Cooler Auto. Reset Relief Valves
19 — Solid-State Starter Control Display (Optional)
20 — Unit-Mounted Starter (Optional)
21 — Motor Sight Glass
22 — Cooler Return-End Waterbox Cover
23 — ASME Nameplate
24 — Vessel Take-Apart Connector
25 — Typical Waterbox Drain Port
26 — Condenser Return-End Waterbox Cover
27 — Refrigerant Moisture/Flow Indicator
28 — Refrigerant Filter/Drier
29 — Liquid Line Isolation Valve (Optional)
30 — Linear Float Valve Chamber
31 — Economizer Assembly
32 — Economizer Float Ball Valve Assembly (Inside)
33 — Discharge Isolation Valve (Optional)
34 — Condenser Pressure Transducer
35 — Refrigerant Charging Valve/Pumpout Connection

Fig. 3 — 19XR,XRV Two-Stage Compressor

REFRIGERATION CYCLE

The compressor continuously draws refrigerant vapor from the cooler at a rate set by the amount of guide vane opening. As the compressor suction reduces the pressure in the cooler, the remaining refrigerant boils at a fairly low temperature (typically 38 to 42 F [3 to 6 C]). The energy required for boiling is obtained from the water flowing through the cooler tubes. With heat energy removed, the water becomes cold enough to use in an air conditioning circuit or for process liquid cooling.

After taking heat from the water, the refrigerant vapor is compressed. Compression adds still more heat energy, and the refrigerant is quite warm (typically 98 to 102 F [37 to 40 C]) when it is discharged from the compressor into the condenser.

Relatively cool (typically 65 to 90 F [18 to 32 C]) water flowing into the condenser tubes removes heat from the refrigerant and the vapor condenses to liquid.

The liquid refrigerant passes through orifices into the FLASC (Flash Subcooler) chamber (Fig. 4). Since the FLASC chamber is at a lower pressure, part of the liquid refrigerant flashes to vapor, thereby cooling the remaining liquid. The FLASC vapor is recondensed on the tubes which are cooled by entering condenser water. The liquid drains into a float chamber between the FLASC chamber and cooler. Here the AccuMeter™ float valve forms a liquid seal to keep FLASC chamber vapor from entering the cooler. When liquid refrigerant passes through the valve, some of it flashes to vapor in the reduced pressure on the cooler side. In flashing, it removes heat from the remaining liquid. The refrigerant is now at a temperature and pressure at which the cycle began. Refrigerant from the condenser also cools the oil and optional variable speed drive.

The refrigeration cycle for a 19XR,XRV chiller with two-stage compressor is similar to the one described above, with the following exception: Liquid refrigerant from the condenser FLASC chamber linear float valve flows into an economizer at intermediate pressure (see Fig. 5). As liquid enters the chamber, due to the lower pressure in the economizer, some liquid flashes into a vapor and cools the remaining liquid. The separated vapor flows to the second stage of the compressor for greater cycle efficiency. A damper valve located on the economizer line to the compressor acts as a pressure regulating device to stabilize low load, low condensing pressure operating conditions. The damper will back up gas flow and thereby raises the economizer pressure to permit proper refrigerant flow through the economizer valve during those conditions. The damper also is closed during start-up conditions to allow the second stage impeller to start unloaded.

The subcooled liquid remaining in the economizer flows through a float valve and then into the cooler.

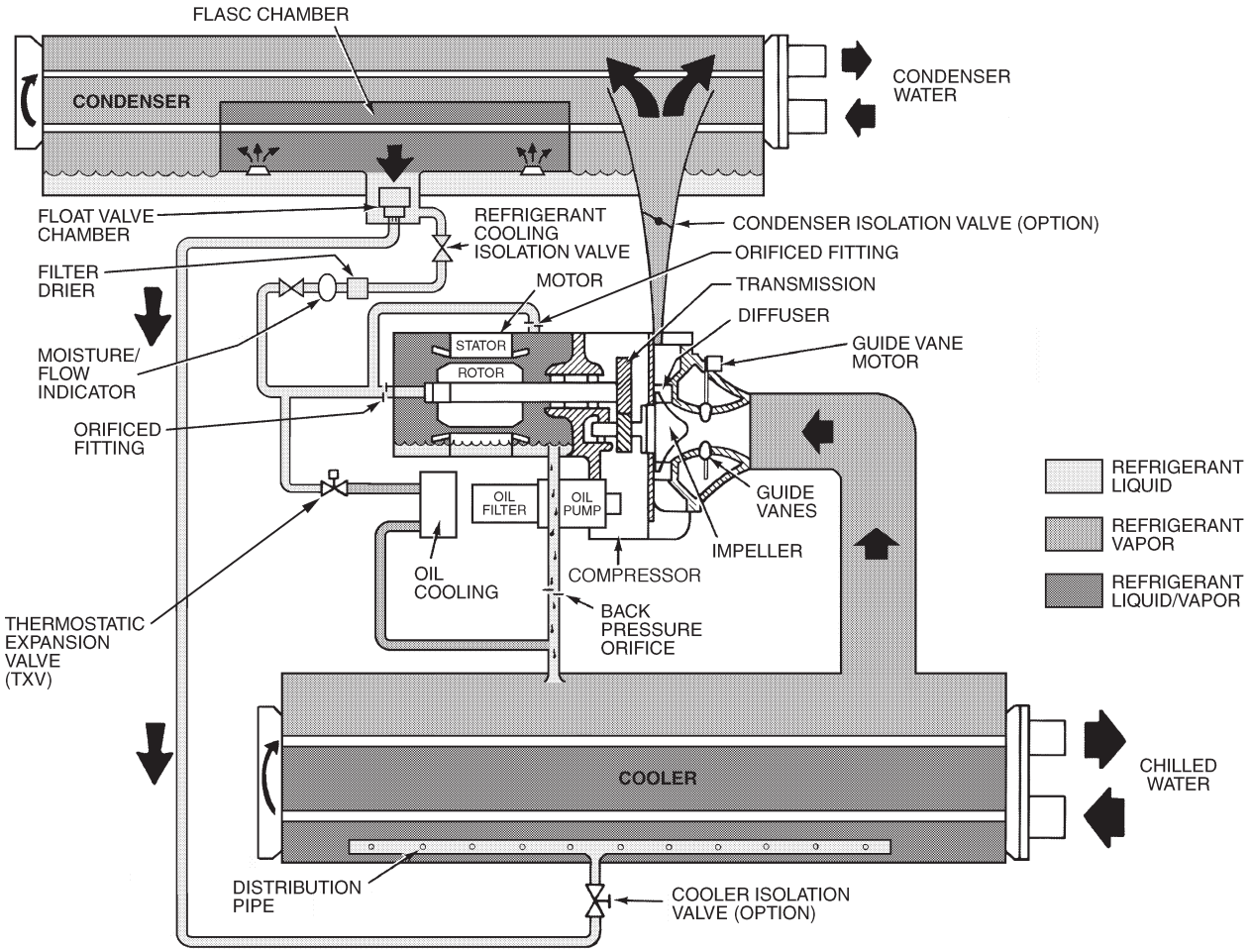

Fig. 4 — Refrigeration Cycle — 19XR,XRV Single-Stage Compressor

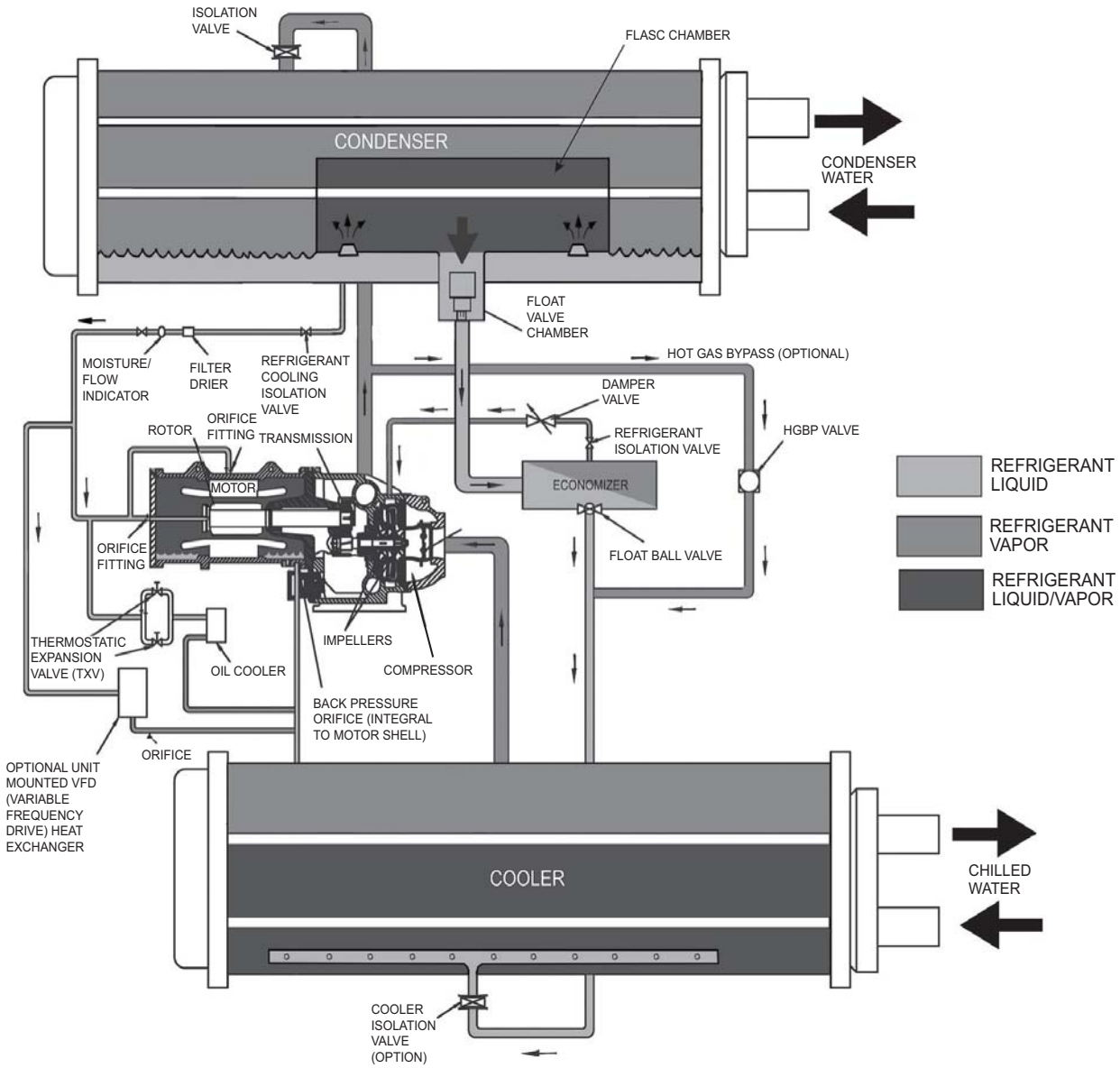

Fig. 5 — Refrigeration Cycle — 19XR,XRV Two-Stage Compressor

MOTOR AND OIL COOLING CYCLE

The motor and the lubricating oil are cooled by liquid refrigerant taken from the bottom of the condenser vessel (Fig. 4 and 5). Refrigerant flow is maintained by the pressure differential that exists due to compressor operation. After the refrigerant flows past an isolation valve, an in-line filter, and a sight glass/ moisture indicator, the flow is split between the motor cooling and oil cooling systems.

Flow to the motor cooling system passes through an orifice and into the motor. Once past the orifice, the refrigerant is directed over the motor by a spray nozzle. The refrigerant collects in the bottom of the motor casing and is then drained back into the cooler through the motor refrigerant drain line. An orifice (in the motor shell) maintains a higher pressure in the motor shell than in the cooler. The motor is protected by a temperature sensor imbedded in the stator windings. An increase in motor winding temperature past the motor override set point overrides the temperature capacity control to hold, and if the motor temperature rises 10° F (5.5° C) above this set point, the PIC II controls close the inlet guide vanes. If the temperature rises above the safety limit, the compressor shuts down.

Refrigerant that flows to the oil cooling system is regulated by thermostatic expansion valves (TXVs). The TXVs regulate flow into the oil/refrigerant plate and frame-type heat exchanger (the oil cooler in Fig. 4 and 5). The expansion valve bulbs control oil temperature to the bearings. The refrigerant leaving the oil cooler heat exchanger returns to the chiller cooler.

VFD COOLING CYCLE

The unit-mounted variable frequency drive (VFD) typically has PIC III controls. The only unit-mounted drive available with PIC II controls is the 575-v input drive.

The 575-v unit-mounted variable frequency drive (VFD) is cooled in a manner similar to the motor and oil cooling cycle (Fig. 4 and 5).

If equipped with a unit-mounted VFD, the refrigerant line that feeds the motor cooling and oil cooler also feeds the heat exchanger on the unit-mounted VFD. Refrigerant is metered through an orifice. The refrigerant leaving the heat exchanger returns to the cooler.

LUBRICATION CYCLE

Summary — The oil pump, oil filter, and oil cooler make up a package located partially in the transmission casing of the compressor-motor assembly. The oil is pumped into a filter assembly to remove foreign particles and is then forced into an oil cooler heat exchanger where the oil is cooled to proper operational temperatures. After the oil cooler, part of the flow is directed to the gears and the high speed shaft bearings; the remaining flow is directed to the motor shaft bearings. Oil drains into the transmission oil sump to complete the cycle (Fig. 6 and 7).

Details — Oil is charged into the lubrication system through a hand valve. Two sight glasses in the oil reservoir permit oil level observation. Normal oil level is between the middle of the upper sight glass and the top of the lower sight glass when the compressor is shut down. The oil level should be visible in at least one of the 2 sight glasses during operation. Oil sump temperature is displayed on the ICVC (International Chiller Visual Controller) default screen. During compressor operation, the oil sump temperature ranges between 125 and 150 F (52 and 66 C).

The oil pump suction is fed from the oil reservoir. An oil pressure relief valve maintains 18 to 25 psid (124 to 172 kPad) differential pressure in the system at the pump discharge. For compressors equipped with rolling element bearings, a range of 18 to 40 psid (124 to 172 kPad) is normal. This differential pressure can be read directly from the ICVC default screen. The oil pump discharges oil to the oil filter assembly. This filter can be closed to permit removal of the filter without draining the entire oil system (see Maintenance sections, pages 92-97, for details). The oil is then piped to the oil cooler heat exchanger. The oil cooler uses refrigerant from the condenser as the coolant. The refrigerant cools the oil to a temperature between 120 and 140 F (49 to 60 C).

As the oil leaves the oil cooler, it passes the oil pressure transducer and the thermal bulb for the refrigerant expansion valve on the oil cooler. The oil is then divided. Part of the oil flows to the thrust bearing, forward pinion bearing, and gear spray. The rest of the oil lubricates the motor shaft bearings and the rear pinion bearing. The oil temperature is measured in the bearing housing as it leaves the thrust and forward journal bearings or on the bearing race if the compressor is equipped with rolling element bearings. The oil then drains into the oil reservoir at the base of the compressor. The PIC II (Product Integrated Control II) measures the temperature of the oil in the sump and maintains the temperature during shutdown (see Oil Sump Temperature and Pump Control section, page 51). This temperature is read on the ICVC default screen.

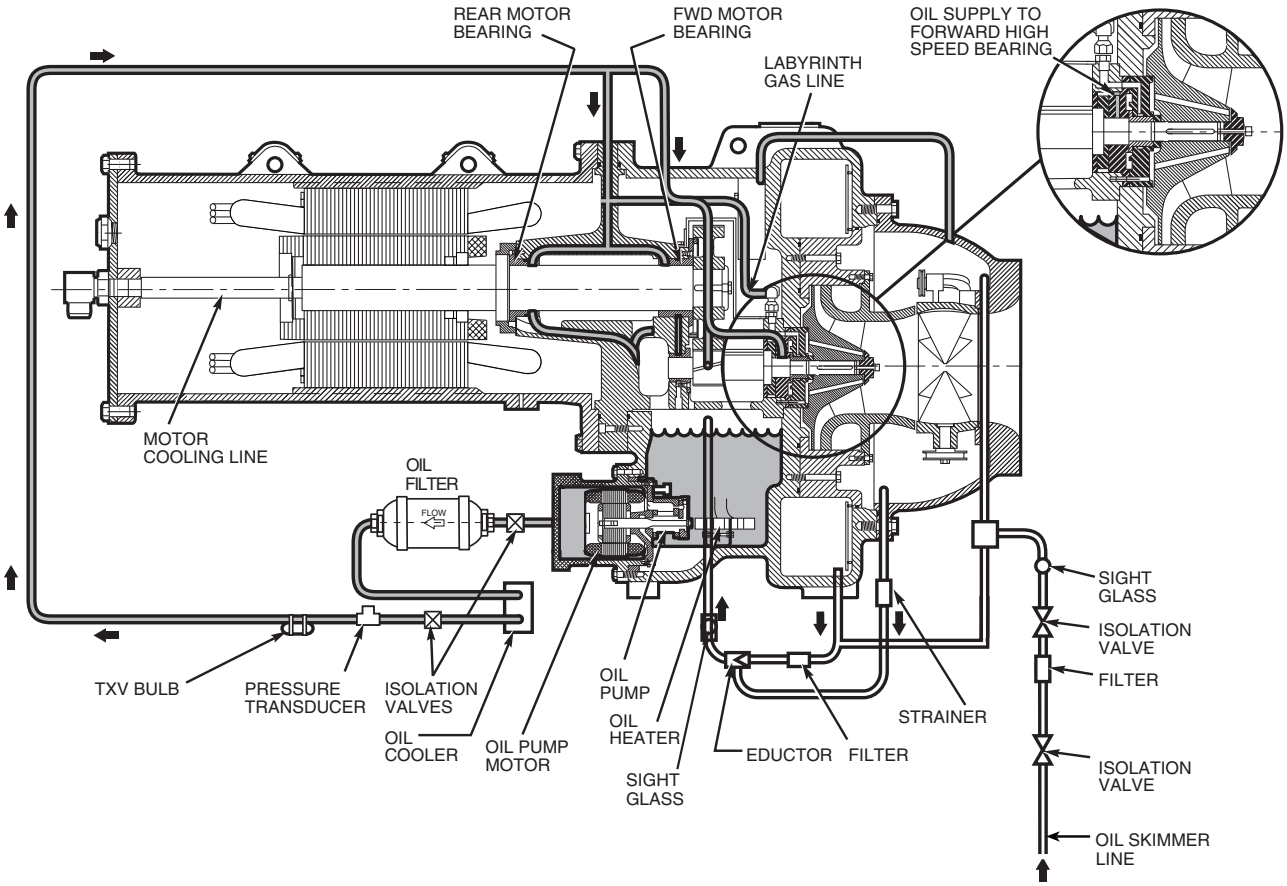

Fig. 6 — Single-Stage Lubrication System

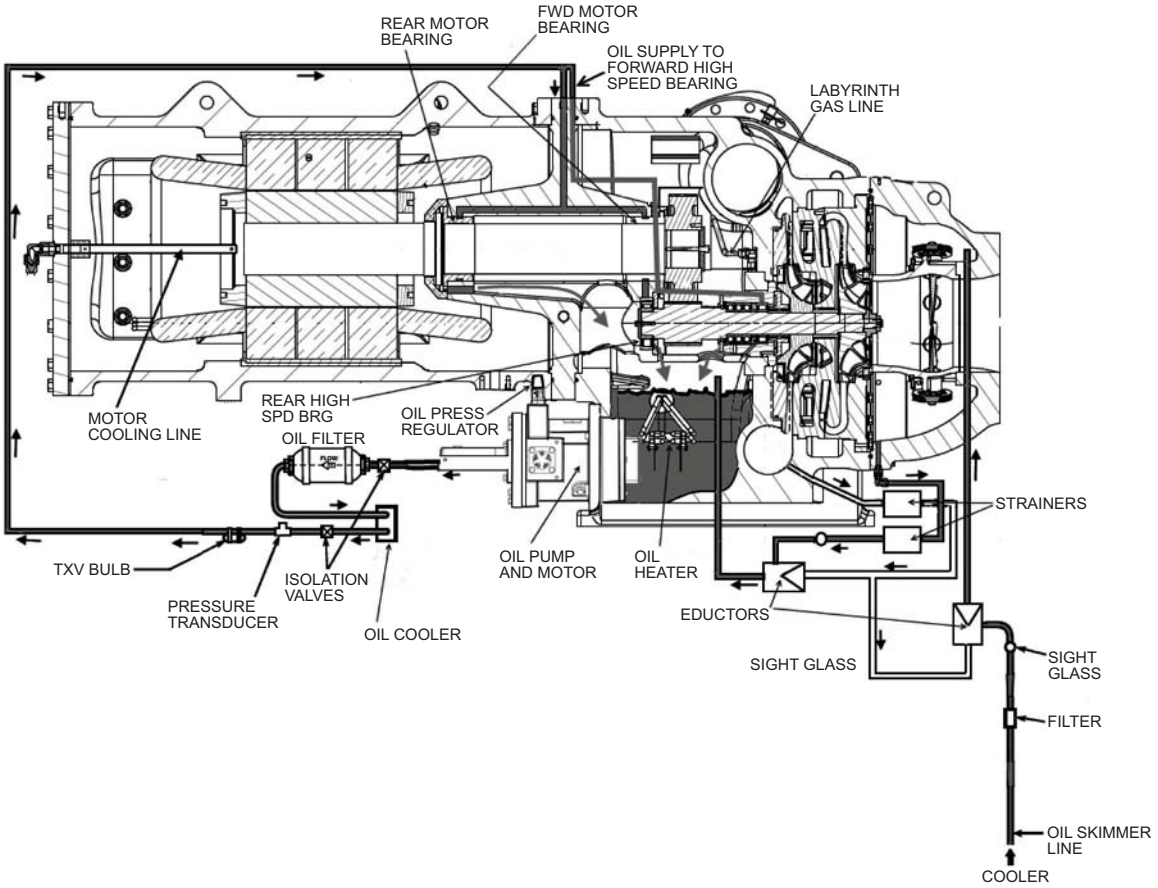

Fig. 7 — Two-Stage Lubrication System

During the chiller start-up, using version 11 PIC II controls, the oil pump is energized and provides 40 seconds of lubrication to the bearings after pressure is verified before starting the compressor. During shutdown, the oil pump runs for 60 seconds to ensure lubrication as the compressor coasts to a stop. The oil pump can also be energized for testing purposes by using the Controls Test.

Ramp loading can be adjusted to help to slow the rate of guide vane opening to minimize oil foaming at start-up. If the guide vanes open quickly, the sudden drop in suction pressure can cause any refrigerant in the oil to flash. The resulting oil foam cannot be pumped efficiently; therefore, oil pressure falls off and lubrication is poor. If oil pressure falls below 15 psid (103 kPad) differential, the PIC II controls will shut down the compressor.

When the oil pump is not running and the oil heater remains energized for 30 minutes, the oil pump will be started and will run for 30 seconds to evenly distribute the heat in the oil system.

There are three pump-filter configurations. The original vane pump, in which the oil filter is contained in the pump housing, followed by the vane pump with the oil filter being external in the oil piping between the oil pump and the oil cooler. The third configuration is the gerotor pump, also with the external oil filter.

A gerotor pump has two rotors, one is inside the other and their center points are offset with respect to each other. This type of pump provides a smooth continuous flow. It is also quieter than other designs.

The gerotor pump can be most easily identified by the external location of the oil pressure regulator. The regulator is located on the bottom of the pump pointing horizontally to the left. See Fig. 8.

Bearings — The 19XR compressor assemblies include four radial bearings and four thrust bearings. The low speed shaft assembly is supported by two journal bearings located between the motor rotor and the bull gear. The bearing closer to the rotor includes a babbitted thrust face which opposes the normal axial forces which tend to pull the assembly towards the transmission. The bearing closer to the bull gear includes a smaller babbitted thrust face, designed to handle counterthrust forces.

For compressors equipped with hydrodynamic bearings, the high speed shaft assembly is supported by two journal bearings located at the transmission end and mid-span, behind the labyrinth seal. The transmission side of the midspan bearing also contains a tilting shoe type thrust bearing which opposes the main axial forces tending to pull the impeller towards the suction end. The impeller side face of the midspan bearing includes a babbitted thrust face, designed to handle counterthrust forces.

For compressors equipped with rolling element bearings, the high speed shaft assembly has been redesigned to utilize rolling element bearings (radial and thrust). Machines employing the rolling element bearings can be expected to have higher oil pressure and thrust bearing temperatures than those compressors using the alternate bearing design.

Oil Reclaim System — The oil reclaim system returns oil lost from the compressor housing back to the oil reservoir by recovering the oil from 2 areas on the chiller. The guide vane housing is the primary area of recovery. Oil is also recovered by skimming it from the operating refrigerant level in the cooler vessel.

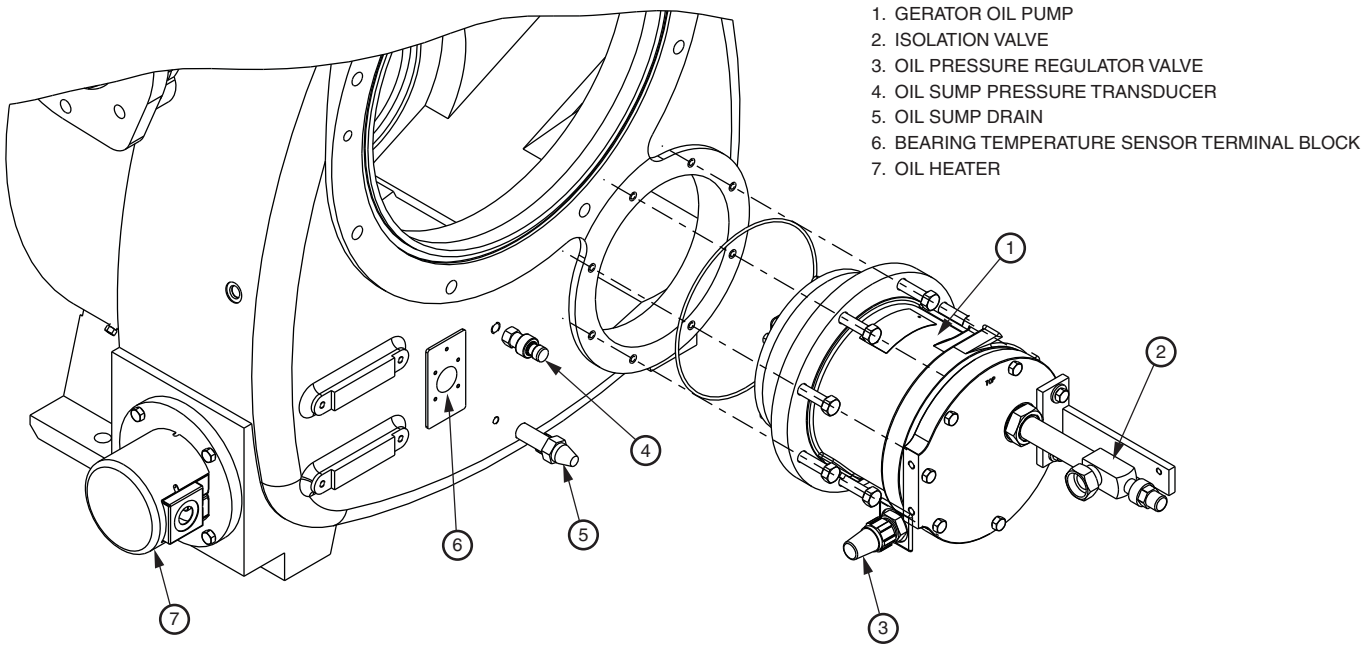

Fig. 8 — Gerotor Oil Pump

PRIMARY OIL RECOVERY MODE — Oil is normally recovered through the guide vane housing on the chiller. This is possible because oil is normally entrained with refrigerant in the chiller. As the compressor pulls the refrigerant up from the cooler into the guide vane housing to be compressed, the oil normally drops out at this point and falls to the bottom of the guide vane housing where it accumulates. Using discharge gas pressure to power an eductor, the oil is drawn from the housing and is discharged into the oil reservoir.

SECONDARY OIL RECOVERY METHOD — The secondary method of oil recovery is significant under light load conditions, when the refrigerant going up to the compressor suction does not have enough velocity to bring oil along. Under these conditions, oil collects in a greater concentration at the top level of the refrigerant in the cooler. This oil and refrigerant mixture is skimmed from the side of the cooler and is then drawn up to the guide vane housing using discharge gas pressure to power an eductor. There is a filter in this line. Because the guide vane housing pressure is much lower than the cooler pressure, the refrigerant boils off, leaving the oil behind to be collected by the primary oil recovery method.

STARTING EQUIPMENT

The 19XR chiller requires a motor starter to operate the centrifugal hermetic compressor motor, the oil pump, and various auxiliary equipment. The starter is the main field wiring interface for the contractor.

See Carrier Specification Z-415 for specific starter requirements, Z-416 for free-standing VFD requirements and Z-417 for unit-mounted VFD requirements. All starters must meet these specifications in order to properly start and satisfy mechanical safety requirements. Starters may be supplied as separate, free-standing units or may be mounted directly on the chiller (unit mounted) for low voltage units only.

Typically three separate circuit breakers are inside the starter. This includes (1) the main compressor motor circuit breaker, (2) a circuit breaker which provides power to chiller controls and the oil heater (provided at 115 vac), and (3) a circuit breaker which provides power at line voltage to the oil pump. The latter two are typically wired in parallel with the first so that power is provided to those services when the main breaker is open. The disconnect switch on the starter front cover is connected to the main breaker.

⚠ WARNING

The main circuit breaker on the front of the starter disconnects the main motor power only. Power is still energized for two other circuits. Two additional circuit breakers inside of the starter must be turned off to disconnect power to the oil pump, PIC II controls and the oil heater. Failure to disconnect power will result in personal injury.

All starters and freestanding VFDs must include a Carrier control module called the Integrated Starter Module (ISM), excluding the Benshaw solid-state and wye-delta MX3™ starters. This module controls and monitors all aspects of the starter. See the Controls section (following) for additional ISM information. Contact Carrier's Replacement Component Division (RCD) for replacement parts.

Unit-Mounted Solid-State Starter (Optional) — The 19XR chiller may be equipped with a solid-state, reduced-voltage starter (Fig. 9 and 10). This starter's primary function is to provide on-off control of the compressor motor. This type of starter reduces the peak starting torque, controls the motor inrush current, and decreases mechanical shock. This capability is summed up by the phrase "soft starting." The solid-state starter is available as a 19XR option (factory supplied and installed). The solid-state starters manufacturer name is located inside the starter access door.

A solid-state, reduced-voltage starter operates by reducing the starting voltage. The starting torque of a motor at full voltage is typically 125% to 175% of the running torque. When the voltage and the current are reduced at start-up, the starting torque is reduced as well. The object is to reduce the starting voltage to adjust the voltage necessary to develop the torque required to get the motor moving. The voltage is reduced by silicon controlled rectifiers (SCRs). The voltage and current are then ramped up in a desired period of time. Once full voltage is reached, a bypass contactor is energized to bypass the SCRs.

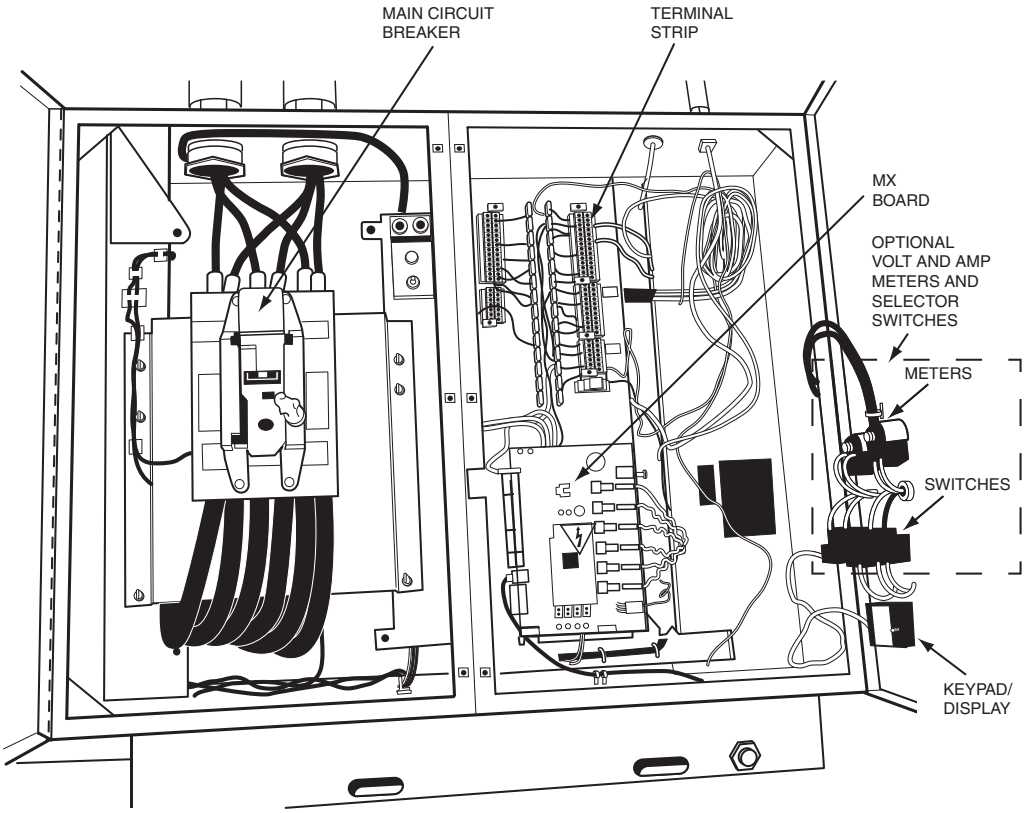

Fig. 9 — Benshaw Solid-State Starter, Internal View

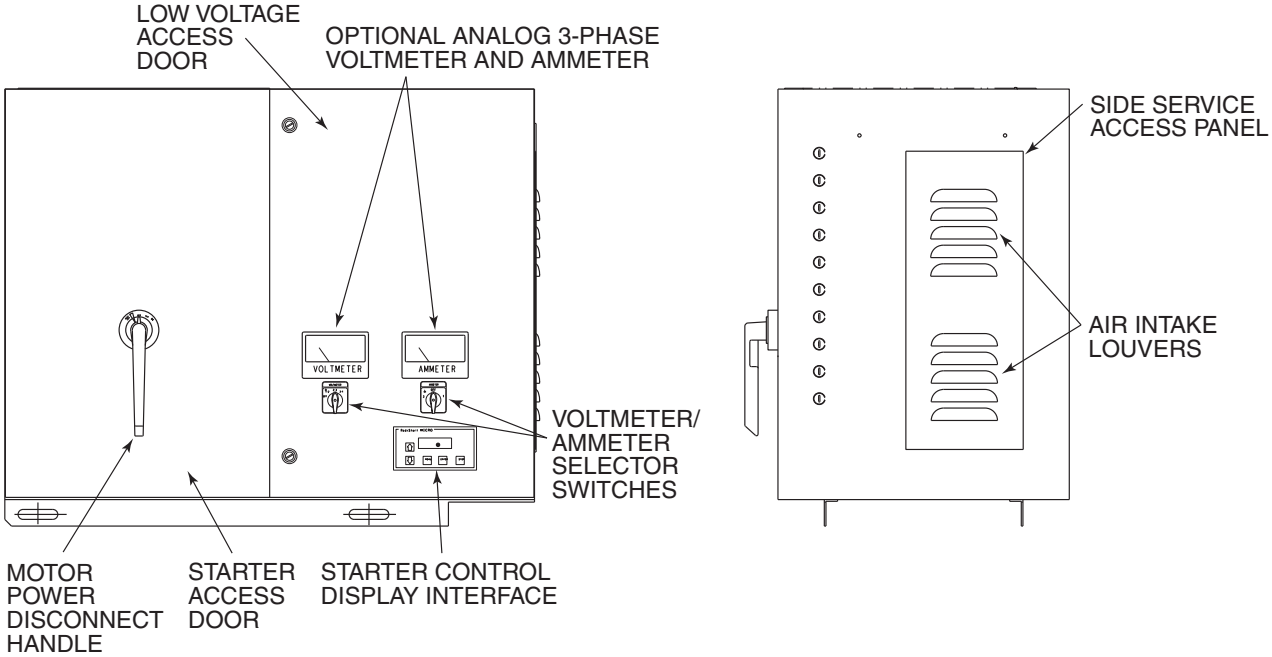

Fig. 10 — Typical Starter External View (Solid-State Starter Shown)

⚠ WARNING

When voltage is supplied to the solid-state circuitry (CB1 is closed), the heat sinks in the starter as well as the wires leading to the motor and the motor terminal are at line voltage. Do not touch the heat sinks, power wiring, or motor terminals while voltage is present or serious injury will result.

There is a display on the front of the Benshaw, Inc., solid-state and wye-delta starters that is useful for troubleshooting and starter checkout. The display indicates:

- line voltage
- control voltage status
- power indication
- proper phasing for rotation
- start circuit energized
- ground fault
- current unbalance
- run state

The starter is further explained in the Check Starter and Troubleshooting Guide sections, pages 72 and 97.

Unit-Mounted Wye-Delta Starter (Optional) — The 19XR chiller may be equipped with a wye-delta starter mounted on the unit. This starter is used with low-voltage motors (under 600 v). It reduces the starting current inrush by connecting each phase of the motor windings into a wye configuration. This occurs during the starting period when the motor is accelerating up to speed. Once the motor is up to speed, the starter automatically connects the phase windings into a delta configuration. Starter control, monitoring, and motor protection is provided by Carrier's Integrated Starter Module (ISM) except for Benshaw MX3™ wye-delta starters which do not use an ISM.

Unit-Mounted VFD (Optional for 575 v Only) — The 19XRV unit can be equipped with a variable frequency drive motor controller mounted on the unit. See Fig. 11. This VFD is used with low voltage motors at 575 v only. All other unit-mounted VFDs use PIC III controls. A VFD reduces the starting current inrush by controlling the voltage and frequency to the compressor motor. Once the motor has accelerated to start-up speed the PIC II modulates the compressor speed and guide vane position to control chilled water temperature. The VFD is further explained in the Controls section and Troubleshooting Guide sections, pages 17 and 97.

Typically, three separate circuit breakers are inside the starter. This includes (1) the VFD circuit breaker, (2) a circuit breaker which provides power to the chiller controls and the the oil heater (provided at 115 vac), and (3) a circuit breaker that provides power at the line voltage to the oil pump. The controls, oil heater and oil pump circuit breakers are wired in parallel with the VFD circuit breaker so that power can be provided to those services when the VFD circuit breaker is open.

⚠ WARNING

The optional main VFD circuit breaker on the front of the VFD enclosure disconnects the VFD only. Power is still energized for the other circuits. Two more circuit breakers inside the starter must be turned off to disconnect power to the oil pump, PIC II controls, and oil heater. Failure to disconnect power will result in personal injury.

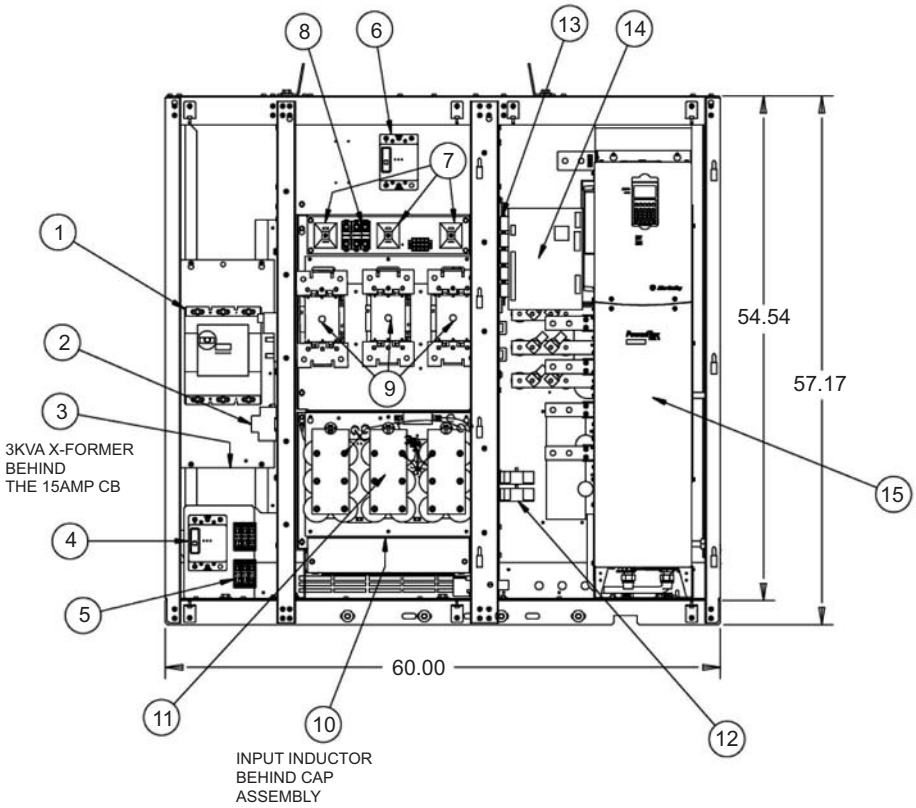

LEGEND

1	—	Main Power Circuit Breaker (CB)
2	—	Electric Surge Protector
3	—	Control Transformer
4	—	Contr Power CB
5	—	Control Power Fuse
6	—	Oil Pump CB
7	—	Pre-Charge Resistors
8	—	Pre-Charge Fuses
9	—	Pre-Charge Contactors
10	—	Input line Reactor
11	—	Capacitor Filter Bank
12	—	Input Current Transformers
13	—	Interface Relays
14	—	ISM
15	—	VFD Power Module

Fig. 11 — PIC II Unit-Mounted 575-v Variable Frequency Drive (VFD) Internal View

The circuit breaker that supplies power to the oil pump and the circuit breaker that supplies power to the oil heater and chiller controls are wired in parallel with the main VFD circuit breaker so that power is supplied to them if the disconnect is open. Refer to wiring schematic in Physical data section.

Other than the unit-mounted starter or drive options discussed above, 19XR chillers may be provided with other alternatives such as free-standing low voltage or medium voltage starters, or free-standing variable frequency drives. These are usually specified in the original sales requisition. Features and functionality included with these alternative starters are defined in Carrier specifications such that operation with PIC II controls remains consistent.

CONTROLS

Definitions

ANALOG SIGNAL — *An analog signal* varies in proportion to the monitored source. It quantifies values between operating limits. (Example: A temperature sensor is an analog device because its resistance changes in proportion to the temperature, generating many values.)

DISCRETE SIGNAL — *A discrete signal* is a 2-position representation of the value of a monitored source. (Example: A switch produces a discrete signal indicating whether a value is above or below a set point or boundary by generating an on/off, high/low, or open/closed signal.)

General — The 19XR hermetic centrifugal liquid chiller contains a microprocessor-based control center that monitors and controls all operations of the chiller (see Fig. 12). The microprocessor control system matches the cooling capacity of the chiller to the cooling load while providing state-of-the-art chiller protection. The system controls cooling load within the set point plus the deadband by sensing the leaving chilled water or brine temperature and regulating the inlet guide vane via a mechanically linked actuator motor. The guide vane is a variable flow pre-whirl assembly that controls the refrigeration effect in the cooler by regulating the amount of refrigerant vapor flow into the compressor. An increase in guide vane opening increases capacity. A decrease in guide vane opening decreases capacity. The microprocessor-based control center protects the chiller by monitoring the digital and analog inputs and executing capacity overrides or safety shutdowns, if required.

PIC II System Components — The chiller control system is called the PIC II (Product Integrated Control II). See Table 1. The PIC II controls the operation of the chiller by monitoring all operating conditions. The PIC II can diagnose a problem and let the operator know what the problem is and what to check. It promptly positions the guide vanes to maintain leaving chilled water temperature. It can interface with auxiliary equipment such as pumps and cooling tower fans to turn them on when required. It continually checks all safeties to prevent any unsafe operating condition. It also regulates the oil heater while the compressor is off and regulates the hot gas bypass valve, if installed. The PIC II controls provide critical protection for the compressor motor and controls the motor starter.

The PIC II can interface with the Carrier Comfort Network® (CCN) if desired. It can communicate with other PIC I, PIC II or PIC III equipped chillers and other CCN devices.

The PIC II consists of 3 modules housed inside 3 major components. The component names and corresponding control voltages are listed below (also see Table 1):

- control panel
  — all extra low-voltage wiring (24 v or less)
- power panel
  — 115 v control voltage transformer primaries (may be rewired to accomodate 230 vac)
  — 115 vac power for oil heater and actuators (oil heaters may be rewired to accomodate 230 vac)
  — up to 575 v for oil pump power
- starter cabinet
  — chiller power wiring (per job requirement)

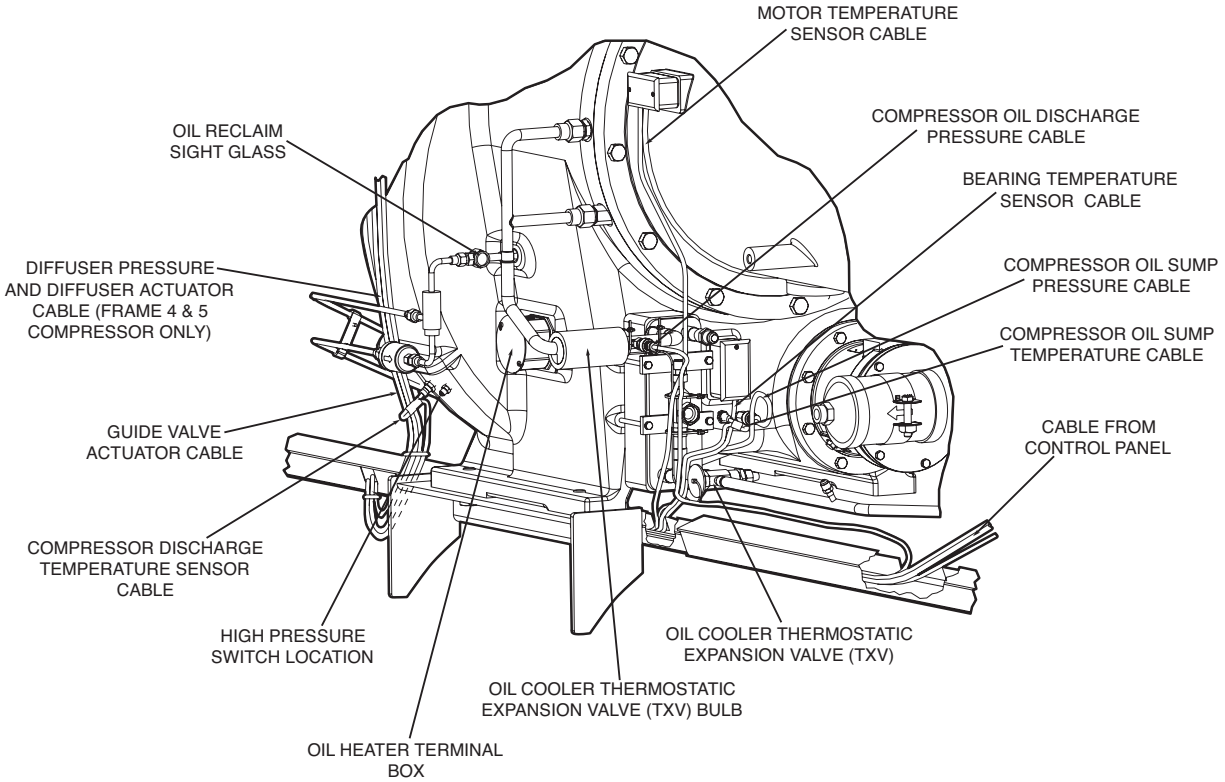

Fig. 12 — 19XR,XRV Compressor Controls and Sensor Locations

Table 1 — Major PIC II Components and Panel Locations

PIC II COMPONENT	PANEL LOCATION
Chiller Visual Controller (ICVC) and Display	Control Panel
Integrated Starter Module (ISM)	Starter Cabinet
Chiller Control Module (CCM)	Control Panel
Oil Heater Contactor (1C)	Power Panel
Oil Pump Contactor (2C)	Power Panel
Hot Gas Bypass Relay (3C) (Optional)	Power Panel
Control Transformers (T1, T2)	Power Panel
Temperature Sensors	See Fig. 2, Fig. 12, and Table 2
Pressure Transducers	See Fig. 2, Fig. 12, and Table 2

INTERNATIONAL CHILLER VISUAL CONTROLLER (ICVC) — The ICVC (International Chiller Visual Controller) is a display/processor module that comes preprogrammed to display all tables in the following optional character sets (languages): English, Mandarin Chinese, Korean, and Japanese. The language selection appears at the bottom of the Service/ICVC Configuration screen. Other languages can be translated and downloaded in place of the Chinese, Korean and Japanese languages in the field using the ILT (International Language Translator) utility software. English cannot be overwritten and will always be resident in the ICVC.

The ICVC may be identified by viewing the back of the plate on which the display is mounted. (Open up the control panel door to view.)

CONTROLLER	COLOR OF PLATE	CEPL NO. (Hardware)	SOFTWARE NO.*	OTHER MARKINGS
ICVC	Metallic	CEPL 130455-03-R	CESR 131294-11	"PIC II" marking on back of green circuit board

*This manual covers ICVC software version 11. Obtain obsolete manuals and service bulletins for information on previous software versions.

The ICVC has a stop button, an alarm light, four buttons for logic inputs, and a backlight display. The backlight will automatically turn off after 15 minutes of non-use. The functions of the four buttons or "softkeys" are menu driven and are shown on the display directly above the softkeys.

The viewing angle of the ICVC can be adjusted for optimum viewing. Remove the 2 bolts connecting the control panel to the brackets attached to the cooler. Place them in one of the holes to pivot the control panel forward to backward to change the viewing angle. See Fig. 13. To change the contrast of the display, access the adjustment on the back of the ICVC. See Fig. 13.

English is the default language.

Three other programmed languages are available as options:

Chinese

Japanese

Korean

NOTE: Pressing any one of the four softkey buttons will activate the backlight display **without** implementing a softkey function.

INTEGRATED STARTER MODULE (ISM) — This module is located in the starter cabinet. This module initiates commands from the ICVC for starter functions such as starting and stopping the compressor, condenser, chilled water pumps, tower fan, spare alarm contacts, and the shunt trip. The ISM monitors starter inputs such as line voltage, motor current, ground fault, remote start contact, spare safety, condenser high pressure, oil pump interlock, starter 1M, and run contacts. It shuts down the chiller if communications with the ICVC are lost. The ISM can also act as the interface for PIC II to the VFD controller.

The ISM module directly measures current and voltage for each phase. Calculation of power factor, power in kilowatts, and energy in kilowatt hours is performed by software in the ISM for constant speed starters only. All of these values are transmitted to the ICVC on the SIO (sensor input/output) communications bus. The ISM software also defines conditions for transition for different starter types, and it integrates I^2t in monitoring motor overload.

CHILLER CONTROL MODULE (CCM) — This module is located in the control panel. The CCM provides the input and outputs necessary to control the chiller. This module monitors refrigerant pressure, entering and leaving water temperatures, and outputs control for the guide vane actuator, oil heaters, and oil pump. The CCM is the connection point for optional demand limit, chilled water reset, remote temperature reset, refrigerant leak sensor and motor kilowatt output.

OIL HEATER CONTACTOR (1C) — This contactor is located in the power panel (Fig. 14) and operates the heater at either 115 or 230 v. It is controlled by the PIC II to maintain oil temperature during chiller shutdown. Refer to the control panel wiring schematic.

OIL PUMP CONTACTOR (2C) — This contactor is located in the power panel. It operates all 200 to 575-v oil pumps. The PIC II energizes the contactor to turn on the oil pump as necessary.

HOT GAS BYPASS CONTACTOR RELAY (3C) (Optional) — This relay, located in the power panel, controls the opening of the hot gas bypass valve. The PIC II energizes the relay during low load, high lift conditions.

CONTROL TRANSFORMERS (T1, T2) — These transformers convert incoming control voltage to 24 vac power for the 3 power panel contactor relays, CCM, and ICVC.

SENSORS — Three types of temperature sensors are used.

Figure 15 shows a typical temperature sensor for which sensor wells are not used, in systems having an ICVC controller. For this type, the sensor cable can be easily disconnected from the sensor, which is in direct contact with the fluid.

The other typical temperature sensor has sensor wells. See Fig. 16. For this type, the sensor cable cannot be separated from the sensor itself, but the sensor can be easily removed from the well without breaking into the fluid boundry.

The third type of temperature sensor is a thermistor, which is installed either in the motor windings or at the thrust bearing within the compressor. Both of these have redundant sensors such that if one fails, the other can be connected external to the machine. See Table 2 for a list of standard instrumentation sensors.

The PIC II control determines refrigerant temperature in the condenser and evaporator from pressure in those vessels, read from the corresponding pressure transducers. See Fig. 14. The pressure values are converted to the equivalent saturation temperatures for R-134a refrigerant. When the chiller is running, if the computed value for *EVAPORATOR REFRIG TEMP* is greater than, or within 0.6° F (0.33° C) of the *LEAVING CHILLED WATER* temperature, its value is displayed as 0.6° F (0.33° C) below *LEAVING CHILLED WATER* temperature. When the chiller is running, if the computed value for *CONDENSER REFRIG TEMP* is less than, or within 1.2° F (0.67° C) of the *LEAVING COND WATER* temperature, its value is displayed as 1.2° F (0.67° C) above *LEAVING COND WATER* temperature.

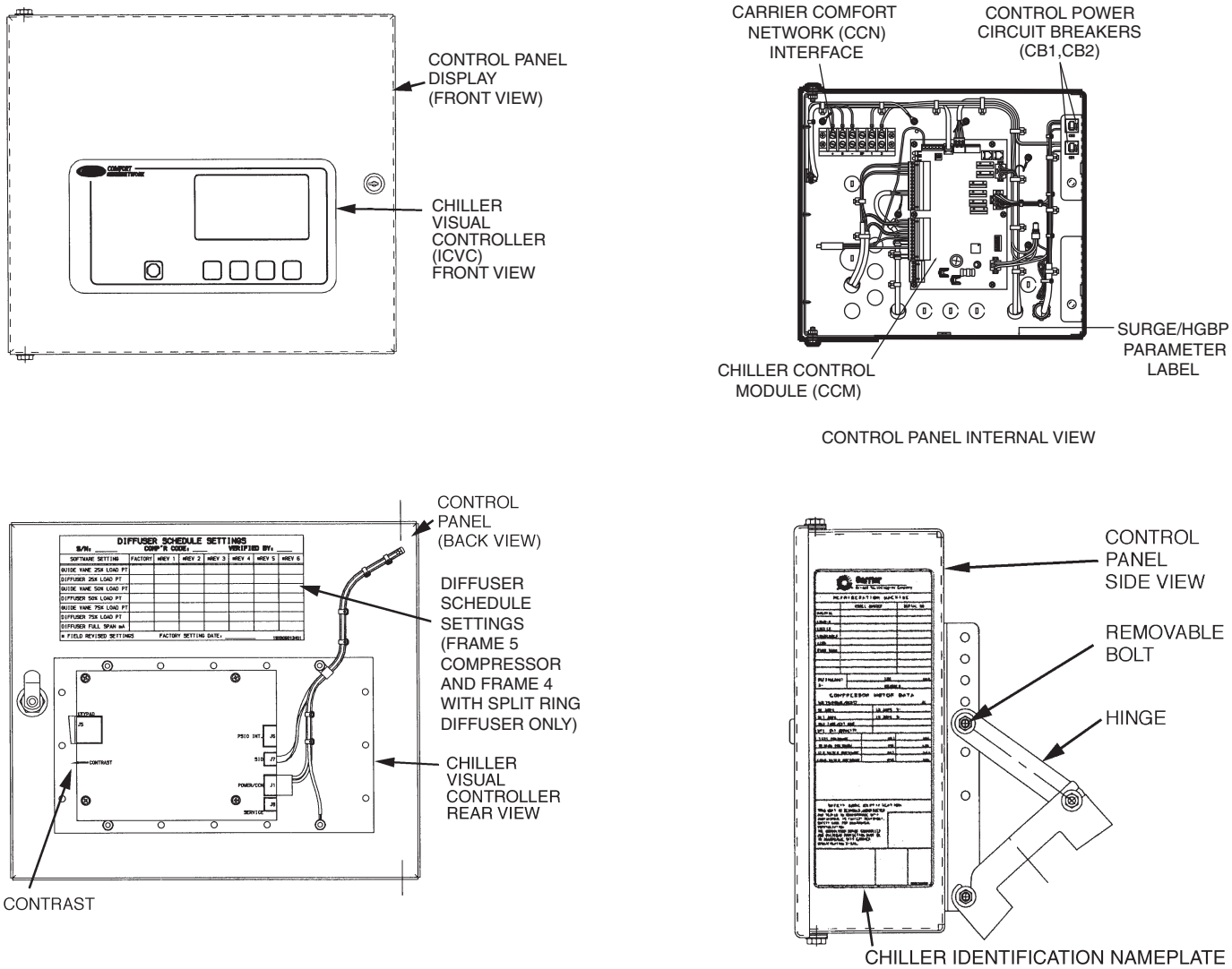

Fig. 13 — Control Panel

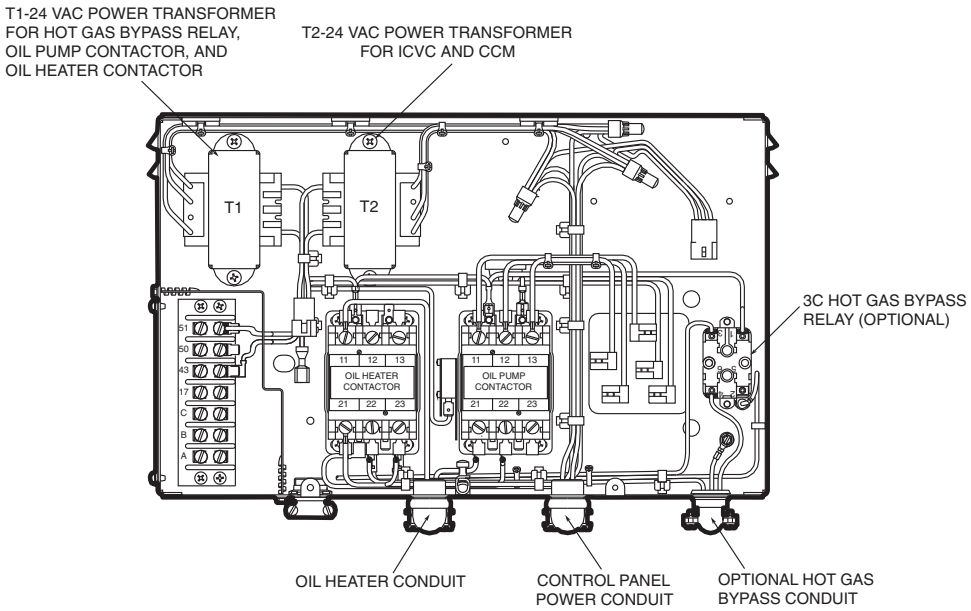

Fig. 14 — Power Panel

Table 2 — Standard Instrumentation Sensors

TYPE	LOCATION MONITORED	REMARKS
Temperature	Entering Chilled Water	Cooler Inlet Nozzle
	Leaving Chilled Water	Cooler Outlet Nozzle
	Entering Condenser Water	Condenser Inlet Nozzle
	Leaving Condenser Water	Condenser Outlet Nozzle
	Evaporator Saturation	Sensor Well on Bottom of Evaporator
	Compressor Discharge	Compressor Volute
	Oil Sump	Compressor Oil Sump
	Compressor Thrust Bearing	Redundant Sensor Provided
	Motor Winding	Redundant Sensor Provided
Pressure	Evaporator	Relief Valve Tee
	Condenser	Relief Valve Tee
	Oil Sump	Compressor Oil Sump
	Oil Pump Discharge	Oil Pump Discharge Line
	Diffuser (Compressor Internal)	Only in Machines Equipped with Split Ring Diffusers
	Entering Chilled Water (Optional)	Cooler Inlet Nozzle
	Leaving Chilled Water(Optional)	Cooler Outlet Nozzle
	Entering Condenser Water	Condenser Inlet Nozzle
	Leaving Condenser Water	Condenser Outlet Nozzle
Angular Position	Guide Vane Actuator	Potentiometer Inside of Actuator
	Split Ring Diffuser Actuator (only on split ring diffuser equipped machines)	Potentiometer Inside of the Actuator (Split Ring Diffuser Position is not Displayed on the ICVC)
Pressure Switch	High Condenser (Discharge) Pressure	Wired into the Starter Control Circuit
Temperature Switch	Oil Pump Motor Winding Temperature	Wired into the Oil Pump Control Circuit

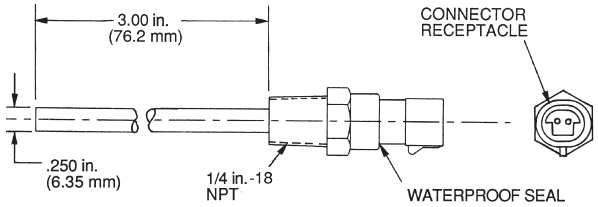

Fig. 15 — Control Sensors (Temperature)

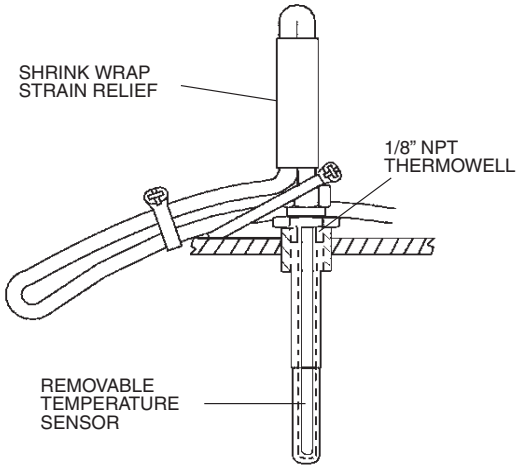

Fig. 16 — Temperature Sensor Used with Thermal Well

A Refrigerant Saturation Temperature sensor (thermistor) is located in the base of the evaporator, sensing refrigerant temperature directly. Evaporator and condenser water side differential pressure transducers are not standard and are not required. The ICVC software uses the evaporator saturation refrigerant temperature in place of differential pressure flow detection to provide evaporator freeze protection.

Approach temperatures are shown in the HEAT_EX screen. EVAPORATOR APPROACH is defined as LEAVING CHILLED WATER TEMPERATURE minus EVAPORATOR REFRIGERANT TEMP (from the transducer). CONDENSER APPROACH is defined as CONDENSER REFRIGERANT TEMP (derived from condenser pressure) minus LEAVING CONDENSER WATER temperature. When the chiller is running, the displayed value for either approach will not be less than 0.2° F (0.1° C). If either approach value exceeds the value configured in the SETUP1 screen, the corresponding Approach Alert message will be entered into the ALERT HISTORY table.

ICVC Operation and Menus (Table 3 and Fig. 17-23)

GENERAL — The ICVC display automatically reverts to the default screen after 15 minutes if no softkey activity takes place and if the chiller is not in the pumpdown mode (Fig. 17).

If a screen other than the default screen is displayed on the ICVC, the name of that screen is in the upper right corner (Fig. 18).

The ICVC may be set to display either English or SI units. Use the ICVC configuration screen (accessed from the Service menu) to change the units. See the Service Operation section, page 62.

MODES

- LOCAL — In LOCAL mode the PIC II accepts commands from the ICVC only and uses the local time occupancy schedule to determine chiller start and stop times. The PIC II can be placed in the local operating mode by pressing the LOCAL softkey. When *RUN STATUS* is READY, the chiller will attempt to start up.
- CCN — In CCN mode the PIC II accepts input from any CCN interface or module (with the proper authority) as well as from the local ICVC. The PIC II uses the CCN time occupancy schedule to determine start and stop times. The PIC II can be placed in the local operating mode by pressing the CCN softkey. When *RUN STATUS* is READY, the chiller will attempt to start up.

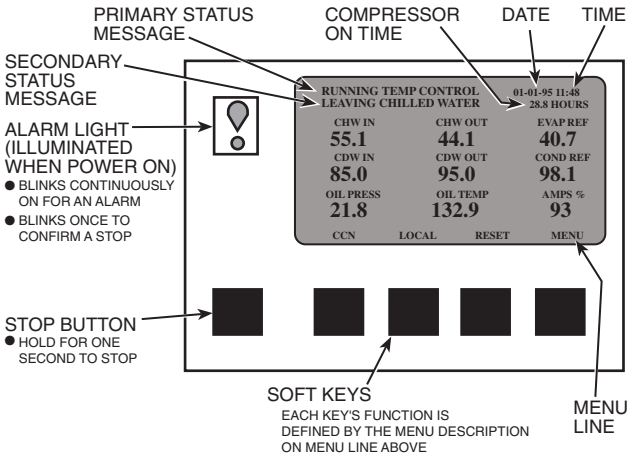

Fig. 17 — ICVC Default Screen

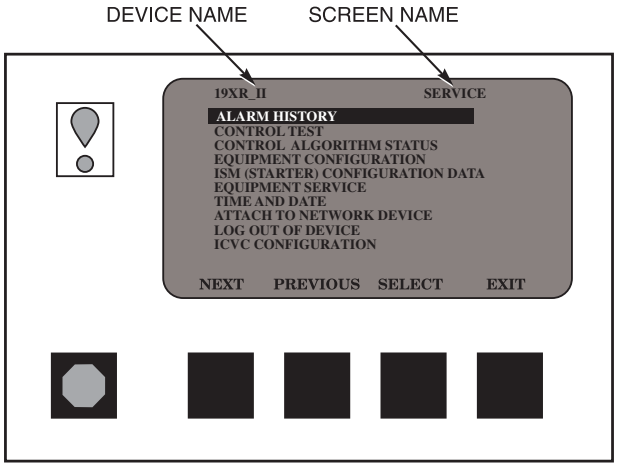

Fig. 18 — ICVC Service Screen

- OFF — The control is in OFF mode when neither the LOCAL nor CCN softkey cue is highlighted. Pressing the STOP key or an alarm will place the control in this mode. The PIC II control must be in this mode for certain operations, such as performing a Control Test or accessing ISM Configuration parameters.

Force priority — The forces from various sources apply in an order of priority. Any force can override a force with a lower priority. The lowest priority belongs to the normal operating control. A higher force cannot be overridden. For example, a Service Tool force cannot be overridden by anything but a machine safety or fire alarm. See Table 4.

ALARMS AND ALERTS — An alarm shuts down the compressor. An alert does not shut down the compressor, but it notifies the operator that an unusual condition has occurred. An alarm (*) or alert (!) is indicated on the STATUS screens on the far right field of the ICVC display screen.

Alarms are indicated when the control center alarm light (!) flashes. The primary alarm message is displayed on the default screen. An additional, secondary message and troubleshooting information are sent to the ALARM HISTORY table.

When an alarm is detected, the ICVC default screen will freeze (stop updating) at the time of alarm. The freeze enables the operator to view the chiller conditions at the time of alarm. The STATUS tables will show the updated information. Once all alarms have been cleared (by pressing the RESET softkey), the default ICVC screen will return to normal operation.

ICVC MENU ITEMS — To perform any of the operations described below, the PIC II must be powered up and have successfully completed its self test. The self test takes place automatically, after power-up.

Press the MENU softkey to view the list of menu structures: STATUS, SCHEDULE, SETPOINT, and SERVICE.

- The STATUS menu allows viewing and limited calibration or modification of control points and sensors, relays and contacts, and the options board.
- The SCHEDULE menu allows viewing and modification of the local and CCN time schedules and Ice Build time schedules.
- The SETPOINT menu allows set point adjustments, such as the entering chilled water and leaving chilled water set points.
- The SERVICE menu can be used to view or modify information on the Alarm History, Control Test, Control Algorithm Status, Equipment Configuration, ISM Starter Configuration data, Equipment Service, Time and Date, Attach to Network Device, Log Out of Network Device, and ICVC Configuration screens.

For more information on the menu structures, refer to Fig. 20.

Press the softkey that corresponds to the menu structure to be viewed: STATUS, SCHEDULE, SETPOINT, or SERVICE. To view or change parameters within any of these menu structures, use the NEXT and PREVIOUS softkeys to scroll down to the desired item or table. Use the SELECT softkey to select that item. The softkey choices that then appear depend on the selected table or menu. The softkey choices and their functions are described below.

BASIC ICVC OPERATIONS (Using the Softkeys) — To perform any of the operations described below, the PIC II must be powered up and have successfully completed its self test.

- Press QUIT to leave the selected decision or field without saving any changes.

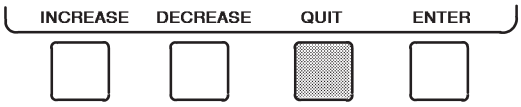

- Press ENTER to leave the selected decision or field and save changes.

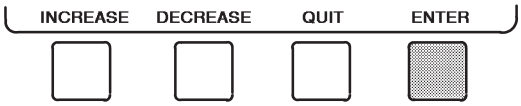

- Press NEXT to scroll the cursor bar down in order to highlight a point or to view more points below the current screen.

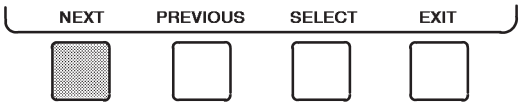

- Press PREVIOUS to scroll the cursor bar up in order to highlight a point or to view points above the current screen.

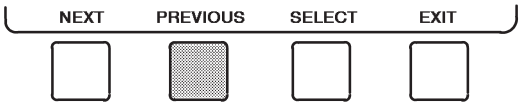

- Press SELECT to view the next screen level (highlighted with the cursor bar), or to override (if allowable) the highlighted point value.

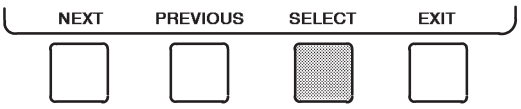

- Press EXIT to return to the previous screen level.

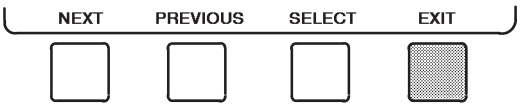

- Press INCREASE or DECREASE to change the highlighted point value.

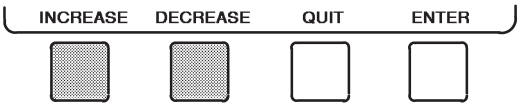

TO VIEW STATUS (Fig. 19) — The status table shows the actual value of overall chiller status such as CONTROL MODE, RUN STATUS, AUTO CHILLED WATER RESET, and REMOTE RESET SENSOR.

1. On the menu screen, press STATUS to view the list of point status tables.

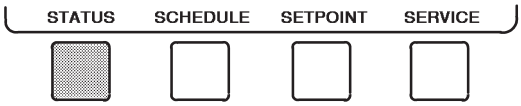

2. Press NEXT or PREVIOUS to highlight the desired status table. The list of tables is:
   - •MAINSTAT — Overall chiller status
   - •VPF_STAT — Variable primary flow surge prevention algorithm status
   - •VDO_STAT — Variable diffuser position algorithm status
   - •STARTUP — Status required to perform start-up of chiller
   - •COMPRESS — Status of sensors related to the compressor
   - •HEAT_EX — Status of sensors related to the heat exchangers
   - •POWER — Status of motor input power
   - •ISM_STAT — Status of motor starter
   - •ICVC_PSWD — Service menu password forcing access screen

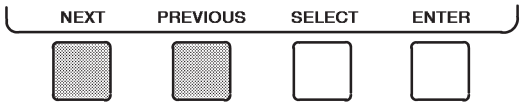

3. Press SELECT to view the desired point status table.

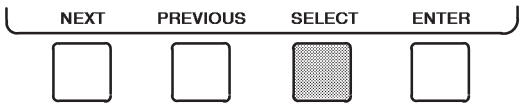

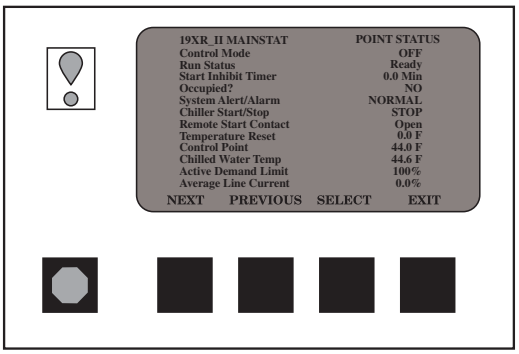

Fig. 19 — Example of Status Screen

4. On the point status table, press NEXT or PREVIOUS until the desired point is displayed on the screen.

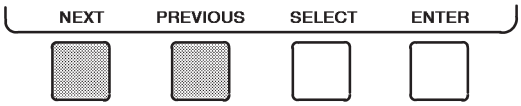

OVERRIDE OPERATIONS (Manual Overrides)

<u>To Force (Manually Override) a Value or Status</u>

1. From any point status screen, press NEXT or PREVIOUS to highlight the desired value.

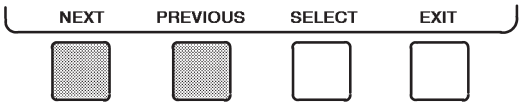

2. Press SELECT to select the highlighted value. Then:

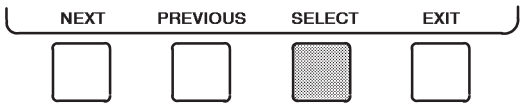

For Discrete Points — Press START or STOP to select the desired state.

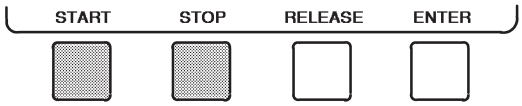

For Analog Points — Press INCREASE or DECREASE to select the desired value.

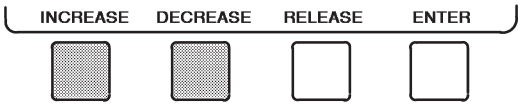

3. Press ENTER to register the new value.

NOTE: When forcing or changing metric values, it is necessary to hold down the softkey for a few seconds in order to see a value change, especially on kilopascal values.

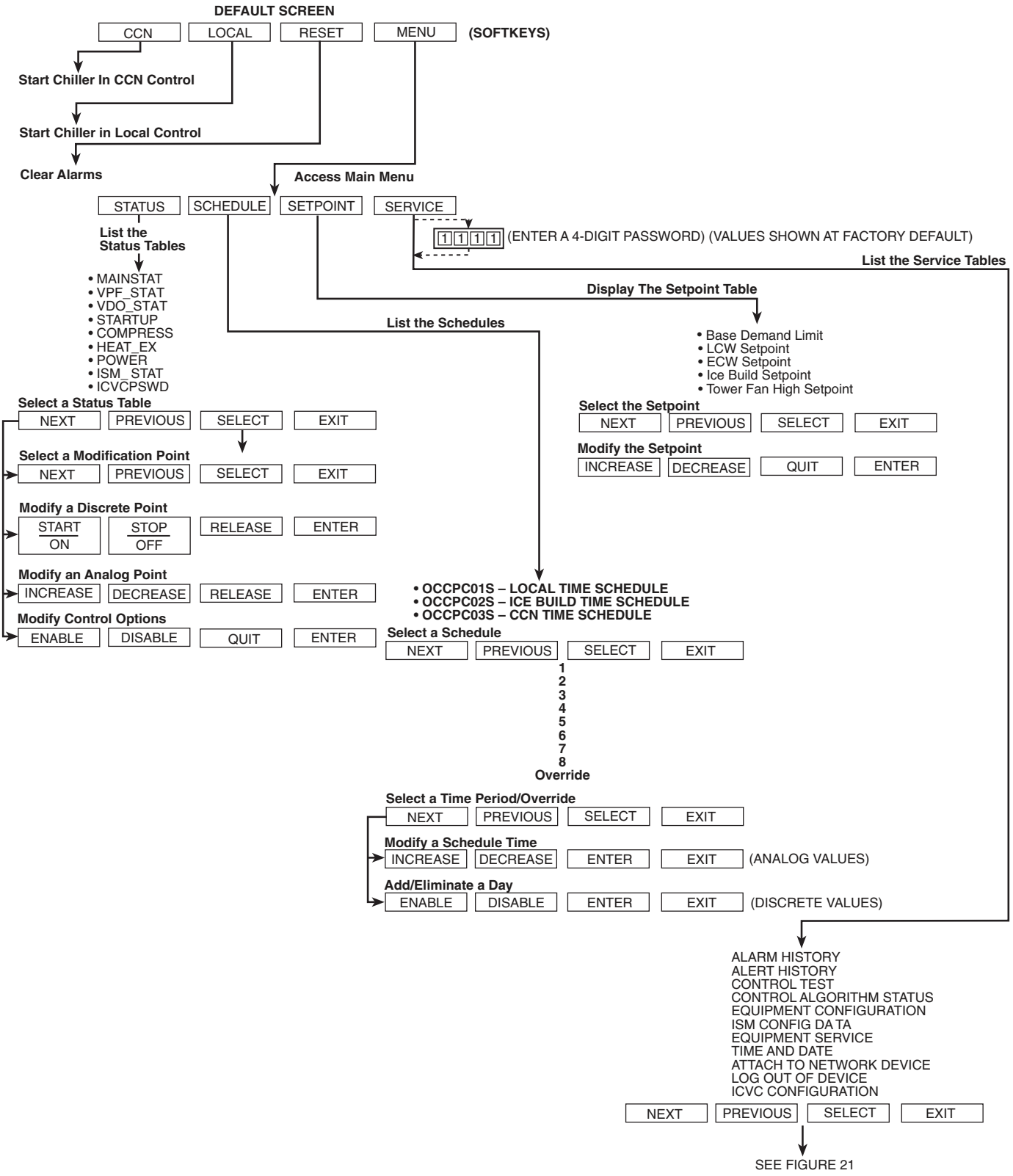

Fig. 20 — PIC II19XR,XRV Chiller Display Menu Structure for ICVC Software Version 11

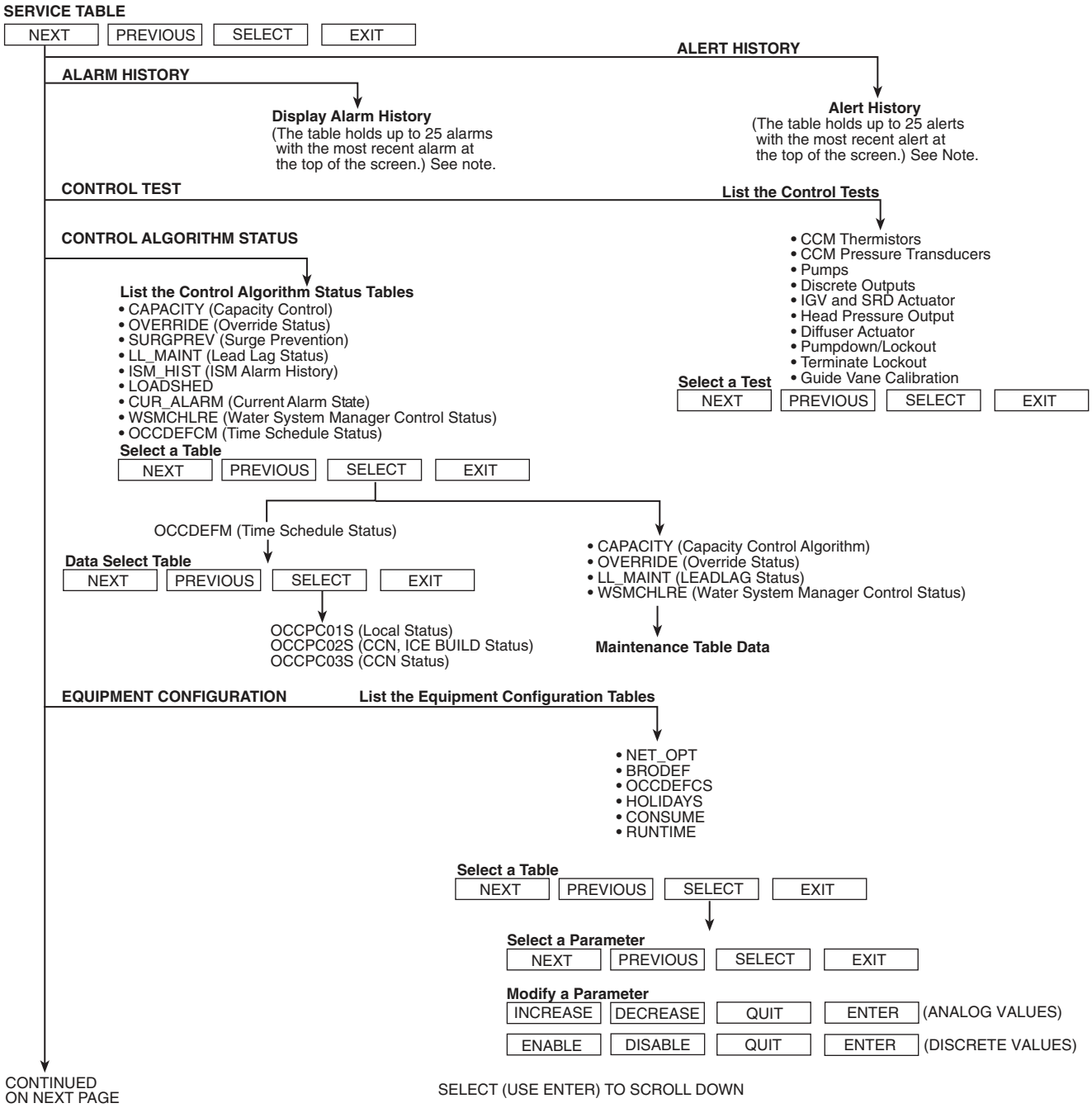

NOTE: The PREVIOUS button refers to the next message towards the top of the list (cursor moving upwards) and the NEXT button refers to the next message lower in the list (cursor moving downward) rather than the timing of the logged messages.

Fig. 21 — PIC II 19XR,XRV Service Menu Structure for ICVC Software Version 11

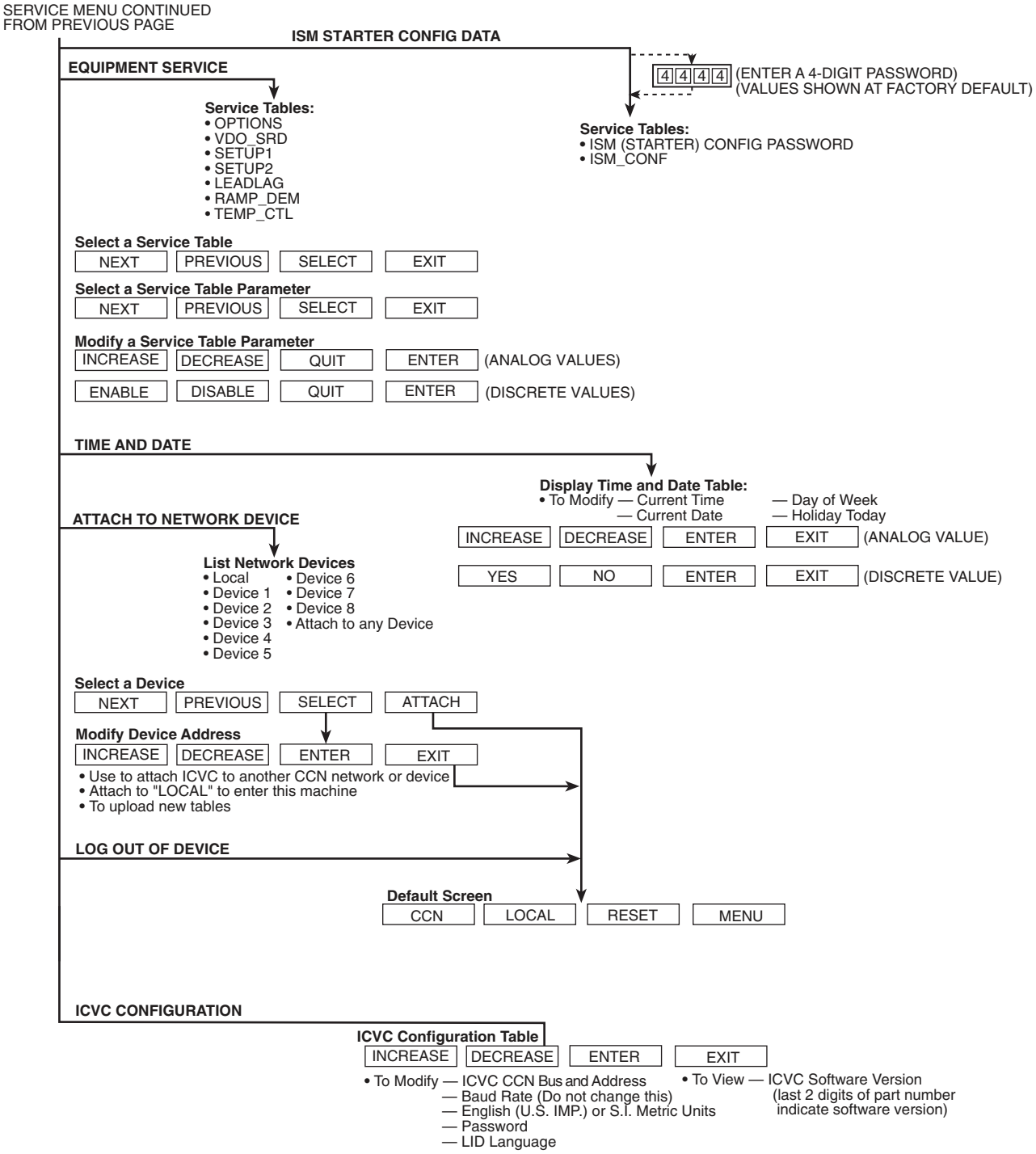

LEGEND

CCN — Carrier Comfort Network
ICVC — International Chiller Visual Controller
ISM — Integrated Starter Module
PIC II — Product Integrated Control II

Fig. 21 — PIC II 19XR,XRV Service Menu Structure for ICVC Software Version 11 (cont)

To Remove a Force

1. On the point status table press NEXT or PREVIOUS to highlight the desired value.

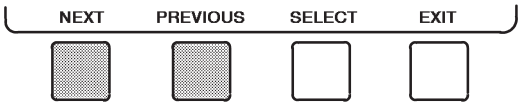

2. Press SELECT to access the highlighted value.

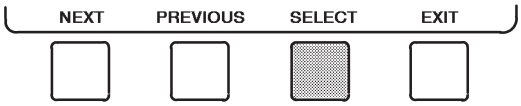

3. Press RELEASE to remove the override and return the point to the PIC II's automatic control.

Force Indication — A forced value is indicated by "SUPVSR," "SERVC," or "BEST" flashing next to the point value on the STATUS table.

TIME SCHEDULE OPERATION (Fig. 22)

On the Menu screen, press SCHEDULE.

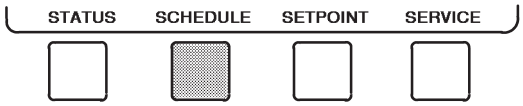

4. Press NEXT or PREVIOUS to highlight the desired schedule.

   OCCPC01S — LOCAL Time Schedule

   OCCPC02S — ICE BUILD Time Schedule

   OCCPC03S — CCN Time Schedule

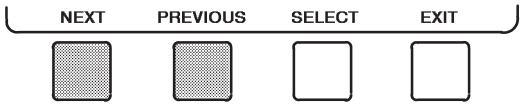

5. Press SELECT to view the desired time schedule.

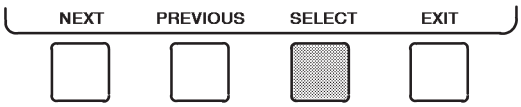

6. Press NEXT or PREVIOUS to highlight the desired period or override to change.

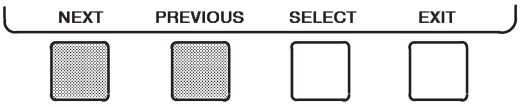

7. Press SELECT to access the highlighted period or override.

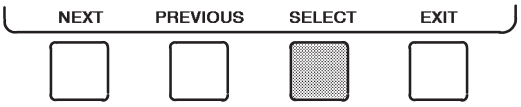

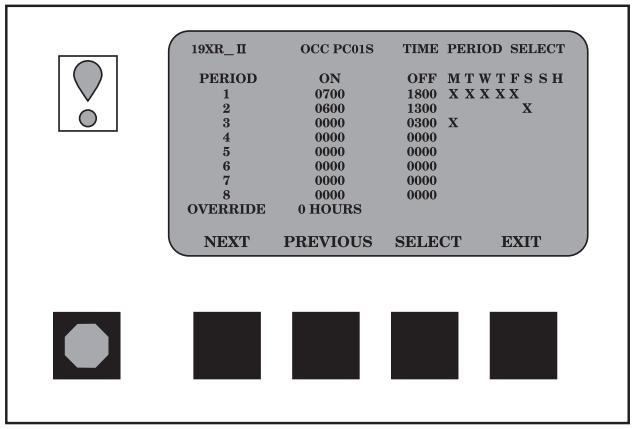

Fig. 22 — Example of Time Schedule Operation Screen

8. a. Press INCREASE or DECREASE to change the time values. Override values are in one-hour increments, up to 4 hours.

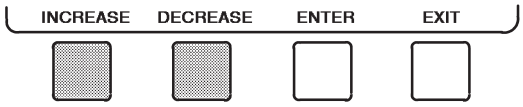

   b. Press ENABLE to select days in the day-of-week fields. Press DISABLE to eliminate days from the period.

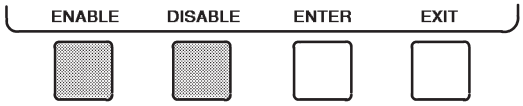

9. Press ENTER to register the values and to move horizontally (left to right) within a period.

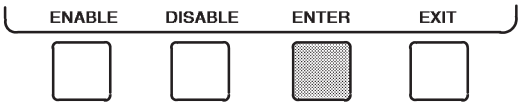

10. Press EXIT to leave the period or override.

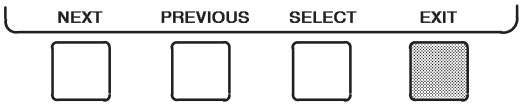

11. Either return to Step 4 to select another period or override, or press EXIT again to leave the current time schedule screen and save the changes.

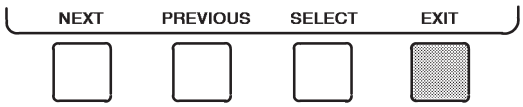

12. The Holiday Designation (HOLIDEF table) may be found in the Service Operation section, page 62. The month, day, and duration for the holiday must be assigned. The Broadcast function in the BRODEF table also must be enabled for holiday periods to function.

TO VIEW AND CHANGE SET POINTS (Fig. 23)

1. To view the SETPOINT table, from the MENU screen press SETPOINT.

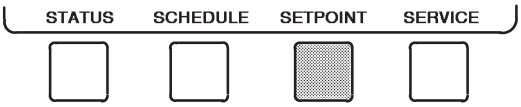

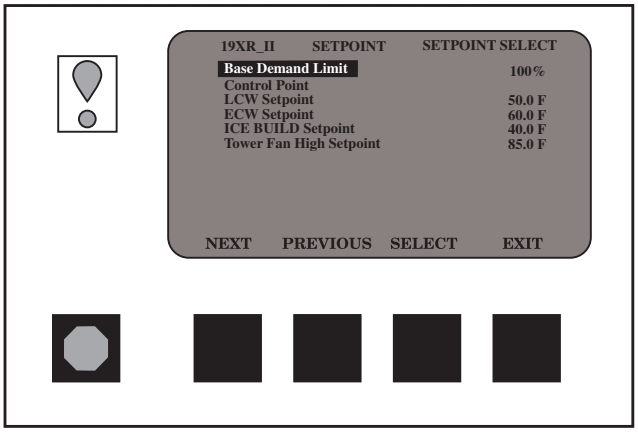

Fig. 23 — Example of Set Point Screen

2. There are 5 set points on this screen: BASE DEMAND LIMIT, LCW SETPOINT (leaving chilled water set point), ECW SETPOINT (entering chilled water set point), ICE BUILD SETPOINT, and TOWER FAN HIGH SETPOINT. Only one of the chilled water set points can be active at one time. The set point that is active is determined from the SERVICE menu. The ECW option is activated on the TEMP_CTL screen and Ice Build is enabled on the OPTIONS screen. See the Service Operation section, page 62. The ice build (ICE BUILD) function is also activated and configured from the SERVICE menu.
3. Press NEXT or PREVIOUS to highlight the desired set point entry.

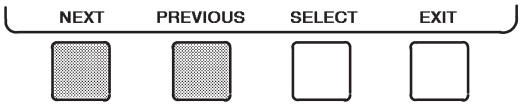

4. Press SELECT to modify the highlighted set point.

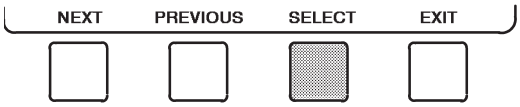

5. Press INCREASE or DECREASE to change the selected set point value.

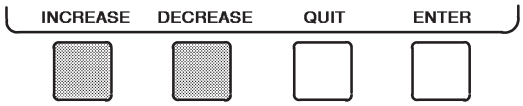

6. Press ENTER to save the changes and return to the previous screen.

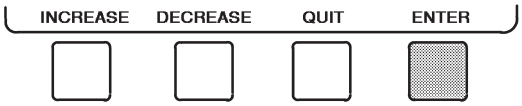

SERVICE OPERATION — To view the menu-driven programs available for Service Operation, see Service Operation section, page 62. For examples of ICVC display screens, see Table 3.

Table 3 — ICVC Display Data

IMPORTANT: The following notes apply to all Table 3 examples.

1. The Display data shown applies to ICVC software version 11.
2. Only 12 lines of information appear on the chiller display screen at any one time. Press the NEXT or PREVIOUS softkey to highlight a point or to view items below or above the current screen. Press the NEXT softkey twice to page forward; press the PREVIOUS softkey twice to page back.
3. To access the information shown in Examples 10 through 25, enter your 4-digit password after pressing the SERVICE softkey. If no softkeys are pressed for 15 minutes, the ICVC automatically logs off (to prevent unrestricted access to PIC II controls) and reverts to the default screen. If this happens, you must re-enter your password to access the tables shown in Examples 10 through 25.
4. Terms in the Description column of these tables are listed as they appear on the chiller display screen.
5. The ICVC may be configured in English or Metric (SI) units using the ICVC CONFIGURATION screen. See the Service Operation section, page 62, for instructions on making this change.
6. The items in the Reference Point Name column *do not appear on the chiller display screen*. They are data or variable names used in CCN or Building Supervisor (BS) software. They are listed in these tables as a convenience to the operator if it is necessary to cross reference CCN/BS documentation or use CCN/BS programs. For more information, see the 19XR CCN literature.
7. Reference Point Names shown in these tables in all capital letters can be read by CCN and BS software. Of these capitalized names, those preceded by a dagger (†) can also be changed (that is, written to) by the CCN, BS, and the ICVC. Capitalized Reference Point Names preceded by two asterisks can be changed only from the ICVC. Reference Point Names in lower case type can be viewed by CCN or BS only by viewing the whole table.
8. Alarms and Alerts: An asterisk *in the far right field of a ICVC status screen* indicates that the chiller is in an alarm state; an exclamation point in the far right field of the ICVC screen indicates an alert state. The asterisk (or exclamation point) indicates that the value on that line has exceeded (or is approaching) a limit. For more information on alarms and alerts, see the Alarms and Alerts section, page 21.
9. Index of all ICVC parameters is shown in Appendix A.
10. An abbreviation in the column to the right of POINT STATUS, indicates that the point is being Forced and the Force level. The CCN Force priority hierarchy is found in ICVC OPERATION AND MENUS. (This does not apply to the DEFAULT screen).

LEGEND

CCN — Carrier Comfort Network
CHW — Chilled Water
CT — Current Transformer
ECW — Entering Chilled Water
HGBP — Hot Gas Bypass
ICVC — International Chiller Visual Controller
IGV — Inlet Guide Vane
ISM — Integrated Starter Module
LCW — Leaving Chilled Water
LRA — Locked Rotor Amps
mA — Milliamps
P — Pressure
PIC II — Product Integrated Controls II
SRD — Split Ring Diffuser
SS — Solid State
T — Temperature
VFD — Variable Frequency Drive
WSM — Water System Manager
^ F — Temperature Difference in Degrees Fahrenheit

Table 3 — ICVC Display Data (cont)

EXAMPLE 1 — CHILLER DISPLAY DEFAULT SCREEN

The following data is displayed in the Default screen.

DESCRIPTION	STATUS	UNITS	REFERENCE POINT NAME (ALARM HISTORY)	DISPLAY
(PRIMARY MESSAGE)				
(SECONDARY MESSAGE)				
(DATE AND TIME)				
Compressor Ontime	0-500000.0	HOURS	C_HRS	
Entering Chilled Water	–40-245	DEG F	ECW	CHW IN
Leaving Chilled Water	–40-245	DEG F	LCW	CHW OUT
Evaporator Refrigerant Temperature *(See Note 1)*	–40-245	DEG F	ERT_EST	EVAP REF
Entering Condenser Water	–40-245	DEG F	ECDW	CDW IN
Leaving Condenser Water	–40-245	DEG F	LCDW	CDW OUT
Condenser Refrigerant Temperature	–40-245	DEG F	CRT	COND REF
Oil Pressure	0-420	PSI	OILPD	OILPRESS
Oil Sump Temp	–40-245	DEG F	OILT	OIL TEMP
Average Line Current	0-999	%	%_AMPS	% AMPS
	0-1		CCN	
	0-1		LOCAL	
	0-1		RESET	

NOTES:
1. The Evaporator Refrigerant Temperature displayed is the smaller value of EVAP REFRIG LIQUID TEMP or CALC EVAP SAT TEMP.
2. The last three entries are used to indicate operating mode to the PIC II. These values may be forced by the ICVC only.

EXAMPLE 2 — MAINSTAT DISPLAY SCREEN

To access this display from the **ICVC default** screen:

1. Press **MENU**.
2. Press **STATUS** (**MAINSTAT** will be highlighted).
3. Press **SELECT**.

DESCRIPTION	STATUS	UNITS	POINT
Control Mode	NOTE 2	NOTE 2	MODE
Run Status	NOTE 3	NOTE 3	STATUS
Start Inhibit Timer	0-15	min	T_START
Occupied?	0/1	NO/YES	OCC
System Alert/Alarm	1-3	NOTE 4	SYS_ALM
†Chiller Start/Stop	0/1	STOP/START	CHIL_S_S
†Remote Start Contact	0/1	OPEN/CLOSE	REMCON
Temperature Reset	–30-30	DEG F	T_RESET
†Control Point (See Note 7)	10-120	DEG F	LCW_STPT
Chilled Water Temp (See Note 8)	–40-245	DEG F	CHW_TMP
†Active Demand Limit	40-100	%	DEM_LIM
Average Line Current	0-999	%	AMPS_%
Motor Percent Kilowatts	0-999	%	KW_P
Auto Demand Limit Input	4-20	mA	AUTODEM
Auto Chilled Water Reset	4-20	mA	AUTORES
Remote Reset Sensor	–40-245	DEG F	R_RESET
Total Compressor Starts	0-99999		c_starts
Starts in 12 Hours	0-8		STARTS
Compressor Ontime	0-500000.0	HOURS	c_hrs
†Service Ontime	0-32767	HOURS	S_HRS
Ice Build Contact	0-1	OPEN/CLOSE	ICE_CON
Refrigerant Leak Sensor	0-20	mA	REF_LEAK
Emergency Stop	0/1	ENABLE/EMSTOP	ENABLE
Alarm Relay	0/1	NORMAL/ALARM	—

NOTES:
1. Numbers in parenthesis below indicate the equivalent CCN index for BEST programming or BACnet Translator use.
2. Off (0), Local (1), CCN (2), Reset (3)
3. Timeout (0), Ready (1), Recycle (2), Startup (3), Running (4), Demand (5), Ramping (6), Autorest (7), Override (8), Tripout (9), Control Test (10), Lockout (11), Pumpdown (12), Prestart (13)
4. Normal (1), Alert (2), Alarm (3).
5. All variables with capital letter point names are available for CCN read operation. Those shown with (†) support write operations for all CCN devices.
6. An abbreviation in the column to the right of POINT STATUS, indicates that the point is being Forced and the Force level. The CCN Force priority hierarchy is found ICVC OPERATION AND MENUS. (This does not apply to the DEFAULT screen).
7. The Control Point (LCW_STPT) displayed is the leaving chilled water control point when the machine is in leaving chilled water control and the entering chilled water control point when the machine is in entering chilled water control.
8. The Chilled Water Temp (CHW_TMP) displayed is the leaving water temperature when the machine is in leaving chilled water control and the entering chilled water temperature when the machine is in entering chilled water control.

RUN STATUS DEFINITIONS

Timeout: The controls are delaying the start sequence until the Start to Start or Stop to Start timers have elapsed.
Ready: The chiller is ready to begin the start sequence.
Recycle: The chiller has automatically shut down until the need for cooling resumes.
Startup: The chiller has completed the prestart checks and has energized the chilled water pump.
Running: The chiller has completed ramp loading following start up
Demand: The chiller is prevented from loading further because it has reached the an AVERAGE LINE CURRENT Limit or a MOTOR KILOWATTS Limit.
Ramping: The chiller has started and is slowly increasing its load to control electrical demand charges.
Autorest: The chiller is starting back up due to a power failure and auto-restart is enabled.
Override: The chiller is prevented from reaching full load by the controls because the chiller is running close to an operational limit.
Tripout: The chiller has declared an alarm and has shut down.
Control Test: The operator has entered the Controls Test screen on the ICVC.
Lockout: The compressor is prevented from starting so that chiller may be safely pumped down to a vacuum.
Pumpdown: The refrigerant is being pumped out of the chiller, the controls have energized the water pumps to prevent freeze-up.
Prestart: The chiller is in the process of the checks prior to energizing the compressor motor.

Table 3 — ICVC Display Data (cont)

EXAMPLE 3 — STARTUP DISPLAY SCREEN

To access this display from the **ICVC default** screen:

1. Press **MENU**.
2. Press **STATUS**.
3. Scroll down to highlight **STARTUP**.
4. Press **SELECT**.

DESCRIPTION	STATUS	UNITS	POINT
Actual Guide Vane Pos	0-100	%	GV_ACT
****Chilled Water Pump**	0-1	OFF/ON	CHWP
Chilled Water Flow	0-1	NO/YES	CHW_FLOW
****Condenser Water Pump**	0-1	OFF/ON	CDP
Condenser Water Flow	0-1	NO/YES	CDW_FLOW
Oil Pump Relay	0-1	OFF/ON	OILR
****Oil Pump Delta P**	–6.7-200	^PSI	OILPD
Compressor Start Relay	0-1	OFF/ON	CMPR
Compressor Start Contact	0-1	OPEN/CLOSED	1CR_A
Starter Trans Relay	0-1	OFF/ON	CMPTRANS
Compressor Run Contact	0-1	OPEN/CLOSED	2M_AUX
****Tower Fan Relay Low**	0-1	OFF/ON	TFR_LOW
****Tower Fan Relay High**	0-1	OFF/ON	TFR_HIGH
Starter Fault	0-1	ALARM/NORMAL	STR_FLT
Spare Safety Input	0-1	ALARM/NORMAL	SAFETY
Shunt Trip Relay	0-1	OFF/ON	TRIPR
ISM Fault Status	0-255		ISMFLT

NOTE: All variables with CAPITAL LETTER point names are available for CCN read operation. Those shown with (**) shall support write operations for the ICVC only.

EXAMPLE 4 — COMPRESS DISPLAY SCREEN

To access this display from the **ICVC default** screen:

1. Press **MENU**.
2. Press **STATUS**.
3. Scroll down to highlight **COMPRESS**.
4. Press **SELECT**.

DESCRIPTION	STATUS	UNITS	POINT
Actual Guide Vane Pos	0-100	%	GV_POS
Guide Vane Delta	-2.0-2.0	%	GV_DELTA
****Target Guide Vane Pos**	0-100	%	GV_TRG
Oil Sump Temp	40 245	F	OILT
****Oil Pump Delta P**	-6.7-200	PSI	OILPD
Comp Discharge Temp	40 245	F	CMPD
Comp Thrust Brg Temp	40 245	F	MTRB
Comp Thrust Lvg OilTemp	40 245	F	MTRB_OIL
Comp Thrust Brg Reset	40 245	F	TB_RESET
Comp Motor Winding Temp	40 245	F	MTRW
Spare Temperature 1	40 245	F	SPARE_T1
Spare Temperature 2	40 245	F	SPARE_T2
Oil Heater Relay	0/1	OFF/ON	OILHEAT
Diffuser Actuator	0-100	%	DIFF_OUT
SRD Rotating Stall	0-1	NO/YES	DIFFAULT
****Target VFD Speed**	0-110	%	VFD_OUT
****Actual VFD Speed**	0-110	%	VFD_ACT
Surge Protection Counts	0-5		SPC
Active Delta Tsat	0-200	^ F	CDW_DT
Surge Line Delta Tsat	0-200	^ F	DELTA_TX
Surge Prevention Active?	0/1	NO/YES	SHG_ACT

NOTE: All variables with CAPITAL LETTER point names are available for CCN read operation. Those shown with (**) shall support write operations for the ICVC only.

Table 3 — ICVC Display Data (cont)

EXAMPLE 5 — HEAT_EX DISPLAY SCREEN

To access this display from the **ICVC default** screen:

1. Press **MENU**.
2. Press **STATUS**.
3. Scroll down to highlight **HEAT_EX**.
4. Press **SELECT**.

DESCRIPTION	STATUS	UNITS	POINT
**Chilled Water Delta P	-6.7-420	PSI	CHWPD
Entering Chilled Water	40 245	F	ECW
Leaving Chilled Water	40 245	F	LCW
Chilled Water Delta T	40 245	^ F	CHW_DT
Chill Water Pulldown/Min	-20-20	^ F	CHW_PULL
Calc Evap Sat Temp	40 245	F	ERT
**Evaporator Pressure	-6.7 420	PSI	ERP
Evap Refrig Liquid Temp	40.0 245.0	F	EST
Evaporator Approach	0-99	^ F	EVAP_APP
**Condenser Water Delta P	-6.7-420	PSI	CDWPD
Entering Condenser Water	40 245	F	ECDW
Leaving Condenser Water	40 245	F	LCDW
Condenser Refrig Temp	40 245	F	CRT
**Condenser Pressure	-6.7 420	PSI	CRP
Condenser Approach	0-99	^ F	COND_APP
Hot Gas Bypass Relay	0/1	OFF/ON	HGBYPASS
Surge Prevention Active?	0/1	NO/YES	SHG_ACT
Actual Guide Vane Pos	0-100	%	GV_POS
Active Delta Tsat	0-200	^ F	CDW_DT
Surge Line Delta Tsat	0-200	^ F	DELTA_TX
Head Pressure Reference	0-100	%	HPR

NOTE: All variables with CAPITAL LETTER point names are available for CCN read operation. Those shown with (**) shall support write operations for the ICVC only.

EXAMPLE 6 — POWER DISPLAY SCREEN

To access this display from the **ICVC default** screen:

1. Press **MENU**.
2. Press **STATUS**.
3. Scroll down to highlight **POWER**.
4. Press **SELECT**.

DESCRIPTION	STATUS	UNITS	POINT
Average Line Current	0-999	%	AMPS_P
Actual Line Current	0-99999	AMPS	AMP_A
Average Line Voltage	0-999	%	VOLT_P
Actual Line Voltage	0-99999	VOLTS	VOLT_A
Power Factor	0.0-1.0		POW_FACT
Motor Kilowatts	0-99999	kW	KW
**Motor Kilowatt-Hours	0-99999	kWH	KWH
Demand Kilowatts	0-99999	kWH	DEM_KWH
Line Current Phase 1	0-99999	AMPS	AMPS_1
Line Current Phase 2	0-99999	AMPS	AMPS_2
Line Current Phase 3	0-99999	AMPS	AMPS_3
Line Voltage Phase 1	0-99999	VOLTS	VOLT_1
Line Voltage Phase 2	0-99999	VOLTS	VOLT_2
Line Voltage Phase 3	0-99999	VOLTS	VOLT_3
Ground Fault Phase 1	0-999	AMPS	GF_1
Ground Fault Phase 2	0-999	AMPS	GF_2
Ground Fault Phase 3	0-999	AMPS	GF_3
Frequency	0-99	Hz	FREQ
I2T Sum Heat-Phase 1	0-200	%	SUM1HEAT
I2T Sum Heat-Phase 2	0-200	%	SUM2HEAT
I2T Sum Heat-Phase 3	0-200	%	SUM3HEAT

NOTE: All variables with CAPITAL LETTER point names are available for CCN read operation. Those shown with (**) shall support write operations for ICVC only.

Table 3 — ICVC Display Data (cont)

EXAMPLE 7 — ISM_STAT DISPLAY SCREEN

To access this display from the **ICVC default** screen:

1. Press **MENU**.
2. Press **STATUS**.
3. Scroll down to highlight **ISM_STAT**.
4. Press **SELECT**.

DESCRIPTION	STATUS	UNITS	POINT
ISM Fault Status	0-255		ISMFLT
Single Cycle Dropout	0-1	NORMAL/ALARM	CYCLE_1
Phase Loss	0-1	NORMAL/ALARM	PH_LOSS
Overvoltage	0-1	NORMAL/ALARM	OV_VOLT
Undervoltage	0-1	NORMAL/ALARM	UN_VOLT
Current Imbalance	0-1	NORMAL/ALARM	AMP_UNB
Voltage Imbalance	0-1	NORMAL/ALARM	VOLT_UNB
Overload Trip	0-1	NORMAL/ALARM	OVERLOAD
Locked Rotor Trip	0-1	NORMAL/ALARM	LRATRIP
Starter LRA Trip	0-1	NORMAL/ALARM	SLRATRIP
Ground Fault	0-1	NORMAL/ALARM	GRND_FLT
Phase Reversal	0-1	NORMAL/ALARM	PH_REV
Frequency Out of Range	0-1	NORMAL/ALARM	FREQFLT
ISM Power on Reset	0-1	NORMAL/ALARM	ISM_POR
Phase 1 Fault	0-1	NORMAL/ALARM	PHASE_1
Phase 2 Fault	0-1	NORMAL/ALARM	PHASE_2
Phase 3 Fault	0-1	NORMAL/ALARM	PHASE_3
1CR Start Complete	0-1	FALSE/TRUE	START_OK
1M Start/Run Fault	0-1	NORMAL/ALARM	1M_FLT
2M Start/Run Fault	0-1	NORMAL/ALARM	2M_FLT
Pressure Trip Contact	0-1	NORMAL/ALARM	PRS_TRIP
Starter Fault	0-1	NORMAL/ALARM	STRT_FLT
Motor Amps Not Sensed	0-1	NORMAL/ALARM	NO_AMPS
Starter Acceleration Fault	0-1	NORMAL/ALARM	ACCELFLT
High Motor Amps	0-1	NORMAL/ALARM	HIGHAMPS
1CR Stop Complete	0-1	FALSE/TRUE	STOP_OK
1M/2M Stop Fault	0-1	NORMAL/ALARM	1M2MSTOP
Motor Amps When Stopped	0-1	NORMAL/ALARM	AMPSTOP
Hardware Failure	0-1	NORMAL/ALARM	HARDWARE

NOTE: All variables with CAPITAL LETTER point names are available for CCN read operation.

EXAMPLE 8 — ICVCPSWD DISPLAY SCREEN

To access this display from the **ICVC default** screen:

1. Press **MENU**.
2. Press **STATUS**.
3. Scroll down to highlight **ICVC**
4. Press **SELECT**.

DESCRIPTION	STATUS	UNITS	POINT
Disable Service Password	0-1	DSABLE/ENABLE	PSWD_DIS
****Remote Reset Option *(See Note 3)***	0-1	DSABLE/ENABLE	RESETOPT
Reset Alarm?	0-1	NO/YES	REMRESET
CCN Mode?	1	YES	REM_CCN

NOTES:

1. All variables with CAPITAL LETTER point names are available for CCN read operation. Those shown with (**) shall support write operations for the ICVC only.
2. To Disable Service Password, force that item to a value of “1” using Service Tool. Once this has been done, the Service menu and the ISM (Starter) Config Data screens can be accessed without a password. This access is cancelled at the time the user exits the Service menu/screen.
3. If the Remote Reset Option is set to a value of “1” at the ICVC, alarms may be reset and CCN mode may be reinstated remotely using Service Tool, Building Supervisor, or ComfortWORKS® controls.

Table 3 — ICVC Display Data (cont)

EXAMPLE 9 — SETPOINT DISPLAY SCREEN

To access this display from the **ICVC default** screen:

1. Press **MENU**.
2. Press **SETPOINT**.
3. Press **SELECT**.

DESCRIPTION	STATUS	UNITS	POINT	DEFAULT
Base Demand Limit	40-100	%	DLM	100
Control Point				
LCW Setpoint	10-120	DEG F	lcw_sp	50.0
ECW Setpoint	15-120	DEG F	ecw_sp	60.0
Ice Build Setpoint	15-60	DEG F	ice_sp	40.0
Tower Fan High Setpoint	55-105	DEG F	TFH_SP	75

NOTE: All variables are available for CCN read operation; forcing shall not be supported on setpoint screens.

EXAMPLE 10 — CAPACITY DISPLAY SCREEN

To access this display from the **ICVC default** screen:

1. Press **MENU**.
2. Press **SERVICE**.
3. Scroll down to highlight **CONTROL ALGORITHM STATUS**.
4. Press **SELECT**.
5. Scroll down to highlight **CAPACITY**.
6. Press **SELECT**.

DESCRIPTION	STATUS	UNITS	POINT
Entering Chilled Water	–40-245	DEG F	ECW
Leaving Chilled Water	–40-245	DEG F	LCW
Capacity Control			
Control Point	10-120	DEG F	ctrlpt
Control Point Error	–99-99	^F	cperr
ECW Delta T	–99-99	^F	ecwdt
ECW Reset	–99-99	^F	ecwres
LCW Reset	–99-99	^F	lcwres
Total Error + Resets	–99-99	^F	error
Guide Vane Delta	–2.0-2.0	%	gvd
Target Guide Vane Pos	0-100	%	GV_TRG
Actual Guide Vane Pos	0-100	%	GV_POS
Target VFD Speed	0-100	%	VFD_OUT
Actual VFD Speed	0-110	%	VFD_ACT
VFD Gain	0.1-1.5		VFD_CTRL
VFD Load Factor	0.0-1.0		VFD_FACT
Demand Limit Inhibit	0.2-2.0	%	DEM_INH
Amps/kW Ramp	40-100	%	DMDLIM

NOTE: All variables with CAPITAL LETTER point names are available for CCN read operation; forcing shall not be supported on maintenance screen.

EXAMPLE 11 — OVERRIDE DISPLAY SCREEN

To access this display from the **ICVC default** screen:

1. Press **MENU**.
2. Press **SERVICE**.
3. Scroll down to highlight **CONTROL ALGORITHM STATUS**.
4. Press **SELECT**.
5. Scroll down to highlight **OVERRIDE**.
6. Press **SELECT**.

DESCRIPTION	STATUS	UNITS	POINT
Comp Motor Winding Temp	–40-245	DEG F	MTRW
Comp Motor Temp Override	150-200	DEG F	MT_OVER
Condenser Pressure	0-420	PSI	CRP
Cond Press Override	90-180	PSI	CP_OVER
Calc Evap Sat Temp	–40-245	DEG F	ERT
Evap Sat Override Temp	2-45	DEG F	ERT_OVER
Comp Discharge Temp	–40-245	DEG F	CMPD
Comp Discharge Alert	125-200	DEG F	CD_ALERT
Comp Thrust Lvg Oil Temp	–40-245	DEG F	MTRB_OIL
Comp Thrust Brg Reset	–40-245	DEG F	TB_RESET
Comp Thrust Brg Temp	155-175	DEG F	MTRB
Comp Thrust Brg Alert	165-185	DEG F	TB_ALERT
Comp Thrust Brg Trip	175-185	DEG F	TB_TRIP
Actual Superheat	–20-99	^F	SUPRHEAT
Superheat Required	6-99	^F	SUPR_REQ
Condenser Refrig Temp	–40-245	DEG F	CRT

NOTE: All variables with CAPITAL LETTER point names are available for CCN read operation; forcing shall not be supported on maintenance screens.

Table 3 — ICVC Display Data (cont)

EXAMPLE 12 — LL_MAINT DISPLAY SCREEN

To access this display from the **ICVC default** screen:

1. Press **MENU** .
2. Press **SERVICE**.
3. Scroll down to highlight **CONTROL ALGORITHM STATUS**.
4. Press **SELECT**.
5. Scroll down to highlight **LL_MAINT.**
6. Press **SELECT**.

DESCRIPTION	STATUS	UNITS	POINT
LeadLag Control			
LEADLAG: Configuration	NOTE 1		leadlag
Current Mode	NOTE 2		llmode
Load Balance Option	0/1	DSABLE/ENABLE	loadbal
LAG START Time	2-60	MIN	lagstart
LAG STOP Time	2-60	MIN	lagstop
Prestart Fault Time	2-30	MIN	preflt
Pulldown Time	2-30	MIN	pulldown
Pulldown: Delta T / Min	x.xx	^F	pull_dt
Satisfied?	0/1	NO/YES	pull_sat
LEAD CHILLER in Control	0/1	NO/YES	leadctrl
LAG CHILLER: Mode	NOTE 3		lagmode
Run Status	NOTE 4		lagstat
Start/Stop	NOTE 5		lag_s_s
Recovery Start Request	0/1	NO/YES	lag_rec
STANDBY CHILLER: Mode	NOTE 3		stdmode
Run Status	NOTE 4		stdstat
Start/Stop	NOTE 5		std_s_s
Recovery Start Request	0/1	NO/YES	std_rec
Spare Temperature 1	–40-245	DEG F	SPARE_T1
Spare Temperature 2	–40-245	DEG F	SPARE_T2

NOTES:
1. DISABLE, LEAD, LAG, STANDBY, INVALID
2. DISABLE, LEAD, LAG, STANDBY, RECOVERY, CONFIG
3. Reset, Off, Local, CCN
4. Timeout, Ready, Recycle, Prestart, Startup, Ramping, Running, Demand, Override, Shutdown, Autorest, Pumpdown, Lockout, Control Test
5. Stop, Start, Retain
6. All variables with CAPITAL LETTER point names are available for CCN read operation; forcing shall not be supported on maintenance screens.

Table 3 — ICVC Display Data (cont)

EXAMPLE 13 — SURGPREV DISPLAY SCREEN

To access this display from the **ICVC default** screen:

1. Press **MENU**.
2. Press **SERVICE**.
3. Scroll down to highlight **CONTROL ALGORITHM STATUS**.
4. Press **SELECT**.
5. Scroll down to highlight **SURGPREV** .
6. Press **SELECT**.

DESCRIPTION	STATUS	UNITS	POINT
Active Region	0-2		ACT_REG
Surge Prevention Active?	0/1	No/Yes	SHG_ACT
Actual Guide Vane Pos	0-100	%	GV_POS
Active Delta Tsat	0-150	^F	DTS_A
Surge Line Delta Tsat	0-150	^F	DTS_C
Chilled Water Delta T	–40-245	^F	CHWDT
HGBP On Delta T	0.5-10.0	^F	HGBP_ON
HGBP Off Delta T	1.5-20.0	^F	HGBP_OFF
Guide Vane Delta	–2.0-2.0	%	GV_DELTA
Target Guide Vane Pos	0-100	%	GV_OUT
Target VFD Speed	0-100	%	VFD_TRG
Speed Change in Effect	0-5		SPD_CHG
VFD Speed Factor	0.000-1.000		VFD_SPD
Surge Counts	0-99		SC
Surge Protection Counts	0-4		SPC
Ramp Loading Active	0/1	No/Yes	RAMP_ACT
VFD Rampdown Active	0/1	No/Yes	VFD_RAMP
HGBP/VFD Active	0-2		HGBP_VFD
VFD Load Factor	0.00-1.20		VFD_RAT
Hot Gas Bypass Relay	0/1	Off/On	HGBYPASS
Surge Limit/HGBP Option	0-2		HGBP_OPT
Override Inhibit Active	0/1	No/Yes	VANE_INH
Override Decrease Active	0/1	No/Yes	VANE_DEC

NOTE: All variables with CAPITAL LETTER point names are available for CCN read operation; forcing shall not be supported on maintenance screens.

EXAMPLE 14 — ISM_HIST DISPLAY SCREEN

To access this display from the **ICVC default** screen:

1. Press **MENU**.
2. Press **SERVICE**.
3. Scroll down to highlight **CONTROL ALGORITHM STATUS**.
4. Press **SELECT**.
5. Scroll down to highlight **ISM_HIST**.
6. Press **SELECT**.

DESCRIPTION	STATUS	UNITS	POINT
ISM FAULT HISTORY			
Values At Last Fault:			
Line Current Phase 1	0-99999	AMPS	AMPS_H1
Line Current Phase 2	0-99999	AMPS	AMPS_H2
Line Current Phase 3	0-99999	AMPS	AMPS_H3
Line Voltage Phase 1	0-99999	VOLTS	VOLTS_H1
Line Voltage Phase 2	0-99999	VOLTS	VOLTS_H2
Line Voltage Phase 3	0-99999	VOLTS	VOLTS_H3
Ground Fault Phase 1	0-999	AMPS	GRFT_H31
Ground Fault Phase 2	0-999	AMPS	GRFT_H23
Ground Fault Phase 3	0-999	AMPS	GRFT_H12
I2T Sum Heat-Phase 1	0-200	%	SUM1HT_H
I2T Sum Heat-Phase 2	0-200	%	SUM2HT_H
I2T Sum Heat-Phase 3	0-200	%	SUM3HT_H
Phase 1 Faulted?	0/1	NO/YES	PHASE_H1
Phase 2 Faulted?	0/1	NO/YES	PHASE_H2
Phase 3 Faulted?	0/1	NO/YES	PHASE_H3
Line Frequency	0-99	Hz	FREQ_H
ISM Fault Status	0-9999		ISMFLT_H

NOTE: All variables with CAPITAL LETTER point names are available for CCN read operation; forcing shall not be supported on maintenance screens.

Table 3 — ICVC Display Data (cont)

EXAMPLE 15 — WSMCHRLE DISPLAY SCREEN

To access this display from the **ICVC default** screen:

1. Press **MENU**.
2. Press **SERVICE**.
3. Scroll down to highlight **CONTROL ALGORITHM STATUS**.
4. Press **SELECT**.
5. Scroll down to highlight **WSMCHRLE**.
6. Press **SELECT**.

DESCRIPTION	STATUS	UNITS	POINT
WSM Active?	0/1	NO/YES	WSMSTAT
Chilled Water Temp	0.0-99.9	DEG F	CHWTEMP
Equipment Status	0/1	OFF/ON	CHWRST
Commanded State	XXXXXXXX	TEXT	CHLRENA
CHW setpt Reset Value	0.0-25.0	DEG F	CHWRVAL
Current CHW Set Point	0.0-99.9	DEG F	CHWSTPT

NOTE: All variables with CAPITAL LETTER point names are available for CCN read operation; forcing shall not be supported on maintenance screens.

EXAMPLE 16 — NET_OPT DISPLAY SCREEN

To access this display from the **ICVC default** screen:

1. Press **MENU**.
2. Press **SERVICE**.
3. Scroll down to highlight **EQUIPMENT CONFIGURATION**.
4. Press **SELECT**.
5. Scroll down to highlight **NET_OPT**.
6. Press **SELECT**.

DESCRIPTION	STATUS	UNITS	POINT	DEFAULT
Loadshed Function				
Group Number	0-99		ldsgrp	0
Demand Limit Decrease	0-60	%	ldsdlta	20
Maximum Loadshed Time	0-120	MIN	maxshed	60
CCN Occupancy Config:				
Schedule Number	3-99		occ_num	3
Broadcast Option	0-1	DSABLE/ENABLE	occbrcst	DSABLE
Alarm Configuration				
Re-Alarm Time	0-1440	MIN	retime	30
Alarm Routing	xxxxxxxx		routing	10000000

NOTE: No variables are available for CCN read or write operation.

Table 3 — ICVC Display Data (cont)

EXAMPLE 17 — ISM_CONF DISPLAY SCREEN

To access this display from the **ICVC default** screen:

1. Press **MENU**.
2. Press **SERVICE**.
3. Scroll down to highlight **ISM (STARTER) CONFIG DATA**.
4. Press **SELECT**.
5. Enter password (4444 Factory Default).
6. Scroll down to highlight **ISM_CONF**.
7. Press **SELECT**.

DESCRIPTION	STATUS	UNITS	POINT	DEFAULT
Starter Type (0 = Full, 1 = Red, 2 = SS/VFD, 3 = VFD)	0-3		starter	1
Motor Rated Line Voltage	200-13200	VOLTS	rlv	460
Volt Transformer Ratio:1	1-115		vt_rat	1
Overvoltage Threshold	105-115	%	overvolt	115
Undervoltage Threshold	85-95	%	undrvolt	85
Over/Under Volt Time	1-10	SEC	ovuntime	5
Voltage % Imbalance	1-10	%	v_unbal	10
Voltage Imbalance Time	1-10	SEC	vu_time	5
Motor Rated Load Amps	10-5000	AMPS	rla	200
Motor Locked Rotor Trip	100-60000	AMPS	mot_lra	1000
Locked Rotor Start Delay	1-10	cycles	lrs_del	5
Starter LRA Rating	100-60000	AMPS	str_lra	2000
Motor Current CT Ratio:1	10-1000		ct_ratio	100
Current % Imbalance	5-40	%	c_unbal	15
Current Imbalance Time	1-10	SEC	cu_time	5
Grnd Fault CT's?	0/1	NO/YES	gf_cts	YES
Ground Fault CT Ratio:1	150		gfct_rat	150
Ground Fault Current	1-25	AMPS	gf_amps	15
Ground Fault Start Delay	1-20	cycles	gf_sdel	10
Ground Fault Persistence	1-10	cycles	gf_pdel	5
Single Cycle Dropout	0/1	DSABLE/ENABLE	1cyc_en	DSABLE
Frequency = 60 Hz? (No = 50)	0/1	NO/YES	linefreq	YES
Line Frequency Faulting	0/1	DSABLE/ENABLE	freq_en	DSABLE

Table 3 — ICVC Display Data (cont)

EXAMPLE 18 — OPTIONS DISPLAY SCREEN

To access this display from the **ICVC default** screen:

1. Press **MENU**.
2. Press **SERVICE**.
3. Scroll down to highlight **EQUIPMENT SERVICE**.
4. Press **SELECT**.
5. Scroll down to highlight **OPTIONS**.
6. Press **SELECT**.

DESCRIPTION	STATUS	UNITS	POINT	DEFAULT
Auto Restart Option	0/1	DSABLE/ENABLE	ASTART	DSABLE
Guide Vane Closure	4-25	%	GV_CLOSE	4
Remote Contacts Option	0/1	DSABLE/ENABLE	MODES	DSABLE
Soft Stop Amps Threshold	40-100	%	STRTSTOP	100
Surge / Hot Gas Bypass				
Surge Limit/HGBP Option	0, 1, 2		srg_hgbp	0
Select: Surge=0, HGBP=1				
Low Load HGBP=2				
Minimum Load Point				
Surge/HGBP Delta Tsmin	0.0-150.0	^ F	DTsatmin	45
Surge/HGBP IGVmin	0.0-110.0	%	GV_MIN	5.0
Full Load Point				
Surge/HGBP Delta Tsmax	0.0-150.0	^ F	DTsatmax	70
Surge/HGBP IGVmax	0.0-110.0	%	GV_MAX	5.0
Surge Line Shape Factor	-1.000 - 0.000		shapefac	-0.040
Surge Line Speed Factor	0.00-3.00		VFD_POW	1.85
Surge Line High Offset	0.1-3.0		SP_HIGH	1.0
Surge/HGBP Deadband	0.5-3	^ F	hgb_db	1
HGBP On Delta T	0.5-10.0	^ F	Hgb_ton	2.0
HGBP Off Delta T	0.5-10.0	^ F	Hgb_toff	4.0
Surge Protection				
Surge Delta % Amps	5-40	%	surge_a	20
Surge Time Period	7-10	MIN	surge_t	8
Surge Delay Time	0-120	SEC	SURG_DEL	0
Ice Build Control				
Ice Build Option	0/1	DSABLE/ENABLE	Ibopt	DSABLE
Ice Build Termination	0-2		Ibterm	0
0=Temp, 1=Contact, 2=Both				
Ice Build Recycle	0/1	DSABLE/ENABLE	Ibrecyc	DSABLE
Refrigerant Leak Option	0/1	DSABLE/ENABLE	LEAK_EN	DSABLE
Refrigerant Leak Alarm mA	4-20	MA	LEAK_MA	20
Head Pressure Reference				
Delta P at 0% (4 Ma)	20-85	PSI	HPDP0	25
Delta P at 100% (20 mA)	20-85	PSI	HPDP100	50
Minimum Output	0-100	%	HPDPMIN%	0

NOTE: No variables are available for CCN read or write operation.

EXAMPLE 19 — VDO_SRD DISPLAY SCREEN

To access this display from the **ICVC default** screen:

1. Press **MENU**.
2. Press **SERVICE**.
3. Scroll down to highlight **EQUIPMENT SERVICE**.
4. Press **SELECT**.
5. Scroll down to highlight **VDO_SRD** .
6. Press **SELECT**.

DESCRIPTION	STATUS	UNITS	POINT	DEFAULT
Diffuser Control				
Diffuser Option	0/1		DIFF_OPT	0
Diffuser Full Span mA	15-22	mA	DIFF_MA	18.0
Guide Vane 25% Load (2)	0-83	%	GV1_25	6.4
Guide Vane 50% Load (2)	0-83	%	GV1_50	22.9
Guide Vane 75% Load (2)	0-83	%	GV1_75	41.3
SRD 25% Load (1)	0-100	%	SRD1_25	73.5
SRD 50% Load (1)	0-100	%	SRD1_50	35.1
SRD 75% Load (1)	0-100	%	SRD1_75	19.5
Lift @ 25% Load (1)	0-100	^F	LF1_25	52.4
Lift @ 100% Load (1)	0-100	^F	LF1_100	67.5
Lift @ 25% Load (2)	0-100	^F	LF2_25	27.2
SRD IGV Offset Select	1-5		OFF_SEL	3
Low Lift Profile Select	1-5		PRO_SEL	3

NOTE: No variables are available for CCN read or write operation.

Table 3 — ICVC Display Data (cont)

EXAMPLE 20 — SETUP1 DISPLAY SCREEN

To access this display from the **ICVC default** screen:

1. Press **MENU**.
2. Press **SERVICE**.
3. Scroll down to highlight **EQUIPMENT SERVICE**.
4. Press **SELECT**.
5. Scroll down to highlight **SETUP1**.
6. Press **SELECT**

DESCRIPTION	STATUS	UNITS	POINT	DEFAULT
Comp Motor Temp Override	150-200	DEG F	MT_OVER	200
Cond Press Override	90-165	PSI	CP_OVER	125
Comp Discharge Alert	125-200	DEG F	CD_ALERT	200
Comp Thrust Brg Alert	10-20	^F	TB_ALERT	10
Comp Thrust Brg Trip	160-185	DEG F	TB_TRIP	185
Thrust Brg Reset Factor	1.0-3.0		TB_POWER	1.4
Chilled Medium	0/1	WATER/BRINE	MEDIUM	WATER
Chilled Water Deadband	0.5-2.0	^F	CWDB	1.0
Evap Refrig Trippoint	0.0-40.0	DEG F	ERT_TRIP	33
Refrig Override Delta T	2.0-5.0	^F	REF_OVER	3
Evap Approach Alert	0.5-15	^F	EVAP_AL	5
Cond Approach Alert	0.5-15	^F	COND_AL	6
Condenser Freeze Point	-20 - 35	DEG F	CDFREEZE	34
Flow Delta P Display	0/1	DSABLE/ENABLE	FLOWDISP	DSABLE
Evap Flow Delta P Cutout	0.5 - 50.0	^PSI	EVAP_CUT	5.0
Cond Flow Delta P Cutout	0.5 - 50.0	^PSI	COND_CUT	5.0
Cond Hi Flow Alarm Opt*	0/1	DSABLE/ENABLE	COND_ALM	DSABLE
Cond Hi Flow Del P Limit	0.5-50.0	PSI	COND_VAL	50.0
Water Flow Verify Time	0.5-5	MIN	WFLOW_T	5
Oil Press Verify Time	15-300	SEC	OILPR_T	40
Recycle Control				
Restart Delta T	2.0-10.0	^F	rcycr_dt	5
Shutdown Delta T	0.5-4.0	^F	rcycs_dt	1
Spare Alert/Alarm Enable Disable=0, Lo=1/3,Hi=2/4				
Spare Temp #1 Enable	0-4		sp1_en	0
Spare Temp #1 Limit	-40-245	DEG F	sp1_lim	245
Spare Temp #2 Enable	0-4		sp2_en	0
Spare Temp #2 Limit	-40-245	DEG F	sp2_lim	245

*When set to DISABLE, alarm functions as an alert.

NOTE: No variables are available for CCN read or write operation; forcing shall not be supported on service screens.

Table 3 — ICVC Display Data (cont)

EXAMPLE 21 — SETUP2 DISPLAY SCREEN

To access this display from the **ICVC default** screen:

1. Press **MENU**.
2. Press **SERVICE**.
3. Scroll down to highlight **EQUIPMENT SERVICE**.
4. Press **SELECT**.
5. Scroll down to highlight **SETUP2**.
6. Press **SELECT**.

DESCRIPTION	STATUS	UNITS	POINT	DEFAULT
Capacity Control				
Proportional Inc Band	2-10		gv_inc	6.5
Proportional Dec Band	2-10		gv_dec	6.0
Proportional ECW Gain	1-3		gv_ecw	2.0
Guide Vane Travel Limit	30-100	%	GV_CTRL	80
VFD Speed Control				
VFD Option	0/1	DSABLE/ENABLE	vfd_opt	DSABLE
VFD Gain	0.1-1.5		vfd_gain	0.75
VFD Increase Step	1-5	%	vfd_step	2
VFD Minimum Speed	65-100	%	vfd_min	70
VFD Maximum Speed	90-110	%	vfd_max	100
VFD Start Speed	65-100	%	vfd_str	100
VFD Surge Line Gain	2.0-3.5		vfd_slg	2.0
VFD Current Limit	0-99999	amps	VFDLIM_T	250

NOTE: No variables are available for CCN read or write operation; forcing shall not be supported on service screens.

EXAMPLE 22 — LEADLAG DISPLAY SCREEN

To access this display from the **ICVC default** screen:

1. Press **MENU**.
2. Press **SERVICE**.
3. Scroll down to highlight **EQUIPMENT SERVICE**.
4. Press **SELECT**.
5. Scroll down to highlight **LEADLAG**.
6. Press **SELECT**.

DESCRIPTION	STATUS	UNITS	POINT	DEFAULT
Lead Lag Control				
LEAD/LAG: Configuration DSABLE=0, Lead=1 LAG=2, STANDBY=3	0-3		leadlag	0
Load Balance Option	0/1	DSABLE/ENABLE	load/bal	DSABLE
Common Sensor Option	0/1	DSABLE/ENABLE	commsens	DSABLE
LAG % Capacity	25-75	%	lag_per	50
LAG Address	1-236		lag_add	92
LAG START Timer	2-60	MIN	lagstart	10
LAG STOP Timer	2-60	MIN	lagstop	10
PRESTART FAULT Timer	2-30	MIN	preft	5
PULLDOWN Timer	1-30	MIN	pulltime	2
STANDBY Chiller Option	0/1	DSABLE/ENABLE	stnd_opt	DSABLE
STANDBY % Capacity	25-75	%	stnd_per	50
STANDBY Address	1-236		stnd_add	93

NOTE: No variables are available for CCN read or write operation.

Table 3 — ICVC Display Data (cont)

EXAMPLE 23 — RAMP_DEM DISPLAY SCREEN

To access this display from the **ICVC default** screen:

1. Press **MENU** .
2. Press **SERVICE**.
3. Scroll down to highlight **EQUIPMENT SERVICE** .
4. Press **SELECT** .
5. Scroll down to highlight **RAMP_DEM** .
6. Press **SELECT** .

DESCRIPTION	STATUS	UNITS	POINT	DEFAULT
Pulldown Ramp Type:	0/1		ramp_opt	1
Select: Temp=0, Load=1				
Demand Limit and kW Ramp				
Demand Limit Source	0/1		dem_src	0
Select: Amps=0, kW=1				
Amps or kW Ramp% Min	5-20	%/MIN	kw_ramp	10
Demand Limit Prop Band	3-15	%	dem_prop	10
Demand Limit At 20 mA	40-100	%	dem_20ma	40
20 mA Demand Limit Opt	0/1	DSABLE/ENABLE	dem_sel	DSABLE
Motor Rated Kilowatts	50-9999	kW	motor_kw	145
Demand Watts Interval	5-60	MIN	dw_int	15

NOTE: No variables are available for CCN read or write operation.

EXAMPLE 24 — TEMP_CTL DISPLAY SCREEN

To access this display from the **ICVC default** screen:

1. Press **MENU**.
2. Press **SERVICE**.
3. Scroll down to highlight **EQUIPMENT SERVICE** .
4. Press **SELECT** .
5. Scroll down to highlight **TEMP_CTL**.
6. Press **SELECT** .

DESCRIPTION	STATUS	UNITS	POINT	DEFAULT
Control Point				
ECW Control Option	0/1	DSABLE/ENABLE	ecw_opt	DSABLE
Temp Pulldown Deg/Min	2-10	^F	tmp_ramp	3
Temperature Reset				
RESET TYPE 1				
Degrees Reset At 20 mA	–30- 30	^F	deg_20ma	10
RESET TYPE 2				
Remote Temp —> No Reset	–40-245	DEG F	res_rt1	85
Remote Temp —> Full Reset	–40-245	DEG F	res_rt2	65
Degrees Reset	–30-30	^F	deg_rt	10
RESET TYPE 3				
CHW Delta T —> No Reset	0-15	^F	restd_1	10
CHW Delta T —> Full Reset	0-15	^F	restd_2	0
Degrees Reset	–30-30	^F	deg_chw	5
Select/Enable Reset Type	0-3		res_sel	0

EXAMPLE 25 — ICVC CONFIGURATION TABLE

To access this display from the **ICVC default** screen:

1. Press **MENU**.
2. Press **SERVICE**.
3. Scroll down to highlight **ICVC CONFIGURATION**.
4. Press **SELECT** .

DESCRIPTION	STATUS	DEFAULT
Device Name	19XRPIC2	
Description	19XR Centrifugal Chiller	
Software Part Number	CESR-131294-xx	
Model Number	text string	
Serial Number	text string	
Reference Number	VER xx	
Bus Number	0	0
Address	1	1
Baud Rate	9600	9600
US Imp/Metric	US Imp	US Imp
Password	1111	1111
LID Language	ENGLISH	ENGLISH

NOTE: Default values are shown for configurable items.

PIC II System Functions — Refer to ICVC Operation and Menus section on page 20.

NOTE: Words not part of paragraph headings and printed in all capital letters can be viewed on the ICVC (e.g., LOCAL, CCN, RUNNING, ALARM, etc.). Words printed *both* in all capital letters and italics can also be viewed on the ICVC and are parameters (*CONTROL MODE, TARGET GUIDE VANE POS*, etc.) with associated values (e.g., modes, temperatures, pressures, percentages, on, off, enable, disable, etc.). Words printed in all capital letters and in a box represent softkeys on the ICVC (e.g., ENTER and EXIT). See Table 3 for examples of the type of information that can appear on the ICVC screens. Figures 17-23 give an overview of ICVC operations and menus.

ALARMS AND ALERTS — An alarm shuts down the compressor. An alert does not shut down the compressor, but it notifies the operator that an unusual condition has occurred. An alarm (*) or alert (!) is indicated on the STATUS screens on the far right field of the ICVC display screen.

Alarms are indicated when the control center alarm light (!) flashes. The primary alarm message is displayed on the default screen. An additional, secondary message and troubleshooting information are sent to the ALARM HISTORY table.

When an alarm is detected, the ICVC default screen will freeze (stop updating) at the time of alarm. The freeze enables the operator to view the chiller conditions at the time of alarm. The STATUS tables will show the updated information. Once all alarms have been cleared (by pressing the softkey), the default ICVC screen will return to normal operation. An alarm condition must be rectified before a RESET will be processed. However, an alert will clear automatically as soon as the associated condition is rectified.

The CCN point *EMERGENCY STOP* is found at the end of the MAINSTAT SCREEN. Whenever this point is forced to a 1 the chiller will stop and the following alarm will be generated: 250->Emergency Override/Stop. The *EMERGENCY STOP* can be forced from anywhere and will be honored whether the chiller is running or not and in CCN, LOCAL or STOP modes.

ICVC MENU ITEMS — To perform any of the operations described below, the PIC II must be powered up and have successfully completed its self test. The self test takes place automatically, after power-up.

Press the MENU softkey to view the list of menu structures: STATUS, SCHEDULE, SETPOINT, and SERVICE.

- The STATUS menu allows viewing and limited calibration or modification of control points and sensors, relays and contacts, and the options board.
- The SCHEDULE menu allows viewing and modification of the local and CCN time schedules and Ice Build time schedules.
- The SETPOINT menu allows set point adjustments, such as the entering chilled water and leaving chilled water setpoints.
- The SERVICE menu can be used to view or modify information on the Alarm History, Alert History, Control Test, Control Algorithm Status, Equipment Configuration, ISM Starter Configuration data, Equipment Service, Time and Date, Attach to Network Device, Log Out of Network Device, and ICVC Configuration screens. For more information on the menu structures, refer to Fig. 20 and 21.

Press the softkey that corresponds to the menu structure to be viewed STATUS, SCHEDULE, SETPOINT, or SERVICE.

To view or change parameters within any of these menu structures, use the and softkeys to scroll down to the desired item or table. Use the softkey to select that item. The softkey choices that then appear depend on the selected table or menu. The softkey choices and their functions are described below.

BASIC ICVC OPERATIONS (Using the Softkeys) — To perform any of the operations described below, the PIC II must be powered up and have successfully completed its self test.

Force priority — The forces from various sources apply in an order of priority. Any force can override a force with a lower priority. The lowest priority belongs to the normal operating control. A higher force cannot be overridden. For example, a Service Tool force cannot be overridden by anything but a machine safety or fire alarm. See Table 4.

FLOW DETECTION — Flow detection for the evaporator and condenser is (a) a required condition for start-up, and (b) used in the freeze protection safety.

Flow and no flow conditions are detected from a combination of several measurements. The usage of water side differential pressure measurements is not standard.

Positive determination of flow on the evaporator side is made if the following conditions are true: (1) the EVAPORATOR REFRIGERANT LIQUID TEMP reads equal to or higher than 1° F (0.6° C) above the EVAPORATOR REFRIGERANT TRIPPOINT, and (2) EVAPORATOR SATURATION TEMPERATURE (determined from the Evaporator Pressure sensor) is greater than the EVAPORATOR REFRIGERANT TRIPPOINT. (If when the unit is in Pumpdown or Lockout mode, conditions (1) and (2) are not required to establish flow.) On the condenser side, positive determination of flow is made if the following conditions are true: (1) the CONDENSER PRESSURE is less than 165 psig (1139 kPa), and (2) CONDENSER PRESSURE is less than the configured CONDENSER PRESSURE OVERRIDE threshold by more than 5 psig (34.5 kPa). In addition, if the water side differential pressure measurement option is enabled, the water side pressure differentials (cooler and condenser) must exceed their respective configured cutout thresholds.

Table 4 — CCN Force Priority Hierarchy

LEVEL	NAME	DESCRIPTION
1	FIRE	Fire Alarm
2	SAFETY	Machine Safety
3	SERVCE	Service Tool Access
4	SUPVSR	Supervisor or LID/ICVC
5	MONITR	Offsite Building Supervisor or ComfortWorks
6	MINOFF	Minimum on/off time
7	CONTROL	Typically 3rd party access via interface
8	BEST	BEST control from FIDs and comfort controllers
9	TEMP	Temperature Override (thermostat type function)
10	LOAD	Loadshed for demand limit/shedding load

NOTE: Not all apply to chillers.

A No Flow determination is made on the evaporator side if (1) the E*VAP SATURATION TEMP* reads lower than 1° F (0.6° C) below the *EVAP REFRIG TRIPPOINT*, or (2) EVAP RE*FRIG TEMP* (determined from the Evaporator Pressure sensor) is less than the *EVAP REFRIG TRIPPOINT* and the *EVAPORATOR APPROACH* exceeds the configured *EVAP APPROACH ALERT* threshold. On the condenser side, a No Flow determination is also made if the *CONDENSER APPROACH* exceeds the configured *COND APPROACH ALERT* threshold and either (1) *CONDENSER PRESSURE* exceeds 165 psig (1139 kPa) or (2) *CONDENSER PRESSURE* exceeds the configured *COND PRESS OVERRIDE* threshold by more than 5 psi (34.5 kPa). In addition, if the water side differential pressure measurement option is enabled, a differential below the configured *EVAP* or *COND FLOW DELTA P CUTOUT* value is sufficient to establish No Flow in either heat exchanger.

If No Flow (for either cooler or condenser) has been determined, and subsequently conditions change such that neither conditions for Flow nor No Flow are all satisfied, the determination will remain No Flow.

In the standard ICVC setup, waterside differential pressure indication is disabled by default. The displays for *CHILLED WATER DELTA P* and *CONDENSER WATER DELTA P* in the HEAT_EX screen will show "*****". In order to enable the option and display a value, change *FLOW DELTA P DISPLAY* to ENABLE in the SETUP1 screen. Pairs of pressure transducers may be connected to the CCM at terminals J3 13-24 in place of the standard resistors and jumpers to determine waterside pressure differentials as in the standard ICVC configuration. (NOTE: If the *FLOW DELTA P DISPLAY* is enabled, but the standard CCM connection is retained, a differential value of approximately 28.5 psi (197 kPa) will always be displayed.)

If waterside differential pressure transducers are used, flow is detected from differential pressure between sensors (pressure transducers) located in water inlet and outlet nozzles, for each heat exchanger. The thresholds for flow determination (*EVAP FLOW DELTA P CUTOUT, COND FLOW DELTA P CUTOUT*) are configured in the SETUP1 screen. If the measured differential is less than the corresponding cutout value for 5 seconds, the determination is that flow is absent. If no flow is detected after *WATER FLOW VERIFY TIME* (configured in the SETUP1 screen) after the pump is commanded to start by the PIC, a shutdown will result, and the corresponding loss-of-flow alarm (alarm state 229 or 230) will be declared. If the measured differential exceeds the *FLOW DELTA P* cutout value, flow is considered to be present.

Alternatively, normally open flow switches may be used for flow indication. In this case, install an evaporator side flow switch in parallel with a 4.3k ohm resistor between CCM terminals J3 17-18, replacing the jumper. For a condenser side flow switch do the same between CCM terminals J3 23-24. If this type of flow switch circuit is used, it is important to perform a zero point calibration (with the flow switch open).

CAPACITY CONTROL — Generally the chiller adjusts capacity in response to deviation of leaving or entering chilled water temperature from its control point. *CONTROL POINT* is based on the configured *SETPOINT* (in the SETPOINT screen: *LCW SETPOINT* or *ECW SETPOINT* or *ICE BUILD SETPOINT*), and *CONTROL POINT* is equal to this *SETPOINT* plus any active chilled water reset value. A reset value may originate from any of the three chilled water/brine reset options configured in the ICVC SERVICE/EQUIPMENT SERVICE/TEMP_CTL screen (see page 55) or from a CCN device. The default reset value is 0° F so that if no reset function is configured the *CONTROL POINT* will equal the *SETPOINT*. *CONTROL POINT* may be viewed or manually overridden from the MAINSTAT screen.

Minor adjustments to the rate of capacity adjustment can be made by changing *PROPORTIONAL INC* (Increase) *BAND, PROPORTIONAL DEC* (Decrease) *BAND*, and *PROPORTIONAL ECW* (Entering Chilled Water), *GAIN* in the SERVICE/EQUIPMENT SERVICE/SETUP2 screen. Increasing the PROPORTIONAL INC BAND or PROPORTIONAL DEC BAND, or decreasing PROPORTIONAL ECW GAIN will reduce the rate of the capacity control response (within limits). See also Proportional Bands section on page 44.

Parameters used in the capacity control determination are displayed in the SERVICE/CONTROL ALGORITHM STATUS/CAPACITY screen and in the STATUS /COMPR screen. Viewing this data will aid in troubleshooting and understanding current operation.

Maximum guide vane travel is configurable as a percent of full travel in the SETUP2 screen. Note that the default maximum is 80%. Note the guide vane position at design conditions. Set the maximum travel approximately 5% higher. This will prevent the vanes from opening wide during temporary overload conditions. This will keep the vanes close to the actual working load position and they should be able to resume control successfully when the load drops.

In addition to its response to control point error and resets, guide vane action and response rates are affected by guide vane position, capacity overrides (see page 51), proportional bands and gain (see page 44), and VFD speed (see below). Parameters affecting guide vane action are displayed in the CAPACITY screen of the SERVICE/CONTROL ALGORITHM STATUS menu.

FIXED SPEED APPLICATIONS — For fixed speed applications, capacity is adjusted solely by movement of the inlet guide vanes. Note that when operating in the surge prevention region, the guide vanes cannot open further and may be forced to close. (See SURGE PREVENTION.)

VARIABLE SPEED (VFD) APPLICATIONS — The PIC II controls the machine capacity by modulating *both* motor speed and inlet guide vanes in response to changes in load. During operation, when the *WATER TEMPERATURE* is further from the *CONTROL POINT* than 1/3 the value of the *CHILLED WATER DEADBAND*, the controller will calculate a *GUIDE VANE DELTA* which will cause a change to either the guide vane position or VFD target speed. Factors considered in the capacity control algorithm include: (1) the sign and magnitude of *GUIDE VANE DELTA* (based on deviation from *CONTROL POINT*, plus resets), (2) *ACTUAL GUIDE VANE POSITION* compared to the *GUIDE VANE TRAVEL LIMIT*, (3) *VFD SPEED* compared to *VFD MAXIMUM SPEED*, and (4) *SURGE PREVENTION* mode.

Generally the controller will maintain the highest inlet guide vane setting at the lowest speed to maximize efficiency while avoiding surge.

First the calculation of *GUIDE VANE DELTA* is performed. If *GUIDE VANE DELTA* is positive, the response will be a *GUIDE VANE POSITION* or *VFD SPEED* increase (within limits). If *GUIDE VANE DELTA* is negative, the response will be a *GUIDE VANE POSITION* or *VFD SPEED* decrease (within limits). Next, the surge prevention mode is determined based on location of the present operating point (see Note) in relation to the configured surge curve. This mode will either be Normal, Surge Prevention High, or Surge Prevention Low. Table 5 indicates which output is modulated first. When the first output reaches its limit (e.g., *ACTUAL GUIDE VANE POSITION* reaches maximum), the second output is modulated. The sequence is the same whether in Surge Prevention High or Surge Prevention Low.

NOTE: For Constant Flow Surge Prevention, the operating point is defined by *CHILLED WATER DELTA T* and *ACTIVE DELTA P*. For Variable Primary Flow Surge Prevention the operating point is defined by *GUIDE VANE POSITION* and *DELTA TSAT*.

Constant Flow Surge Prevention

Normal Capacity Control Mode occurs when *ACTIVE DELTA T> SURGE LINE DELTA T.*

Surge Prevention Mode Level 1 occurs when *ACTIVE DELTA T ≤ SURGE LINE DELTA T.*

Surge Prevention Mode Level 2 occurs when *ACTIVE DELTA T* + 1 ≤ *SURGE LINE DELTA T.*

Variable Primary Flow Surge Prevention

Normal Capacity Control Mode occurs when *ACTIVE DELTA TSAT> SURGE LINE DELTA TSAT.*

Surge Prevention Mode Level 1 occurs when *ACTIVE DELTA TSAT ≤ SURGE LINE DELTA TSAT.*

Surge Prevention Mode Level 2 occurs when *ACTIVE DELTA TSAT* + 1 ≤ *SURGE LINE DELTA TSAT.*

The *VFD GAIN* parameter allows for additional adjustment of the VFD response. Increasing *VFD GAIN* will increase the rate of speed change.

For chillers equipped with VFDs there is an additional overcurrent feature which is similar to Demand Limit Control. The ICVC computes a projected value for motor current (VFD output current, which is not measured by the ISM). The computed value is based on *AVERAGE LINE CURRENT* and *TARGET VFD SPEED*. The control then compares it to *VFD CURRENT LIMIT. VFD CURRENT LIMIT* is a configurable entry in the SETUP2 screen, representing VFD output current when the line side current equals *RATED LOAD AMPS* and *VFD SPEED* is at its maximum. The VFD Control Configuration Job sheet includes the recommended value for *VFD CURRENT LIMIT*, and that value may be further adjusted as described under the VFD Control Verification section. (See page 76.)

If *VFD LOAD FACTOR* (the ratio of estimated VFD output current to *VFD CURRENT LIMIT*) exceeds 0.98, then drive speed is increased until *VFD LOAD FACTOR* goes below 0.96, or until maximum speed is reached. If *VFD LOAD FACTOR* exceeds 1.02 then the *GUIDE VANE POSITION* is made to decrease as well. This action ceases when the *VFD LOAD FACTOR* subsequently drops below 1.0. *VFD LOAD FACTOR* is displayed in the CONTROL ALGORITHM STATUS / CAPACITY screen.

NOTE: Increasing motor speed reduces motor amp draw. This is the current between the VFD and the motor, NOT line current. Generally for the case of *LINE VOLTAGE* equaling motor voltage (460 volts), VFD output (motor) current is a few percent higher than line current at full speed (60 Hz). As drive speeds decrease from maximum, drive output voltage decreases linearly with output frequency, and motor current continues to increase relative to line current.

Table 5 — Guide Vane Delta Modes

GUIDE VANE DELTA	NORMAL CONTROL MODE		SURGE PREVENTION MODE	
	IGV POSITION	VFD SPEED	IGV POSITION	VFD SPEED
From +0.2 to +2.0	Increase 1st	Increase when IGV = max	Increase only if VFD speed = max and if hot gas bypass is present and open	Increase 1st
From –0.2 to –2.0	Decrease when VFD speed = min	Decrease 1st	Decrease	Speed decrease not allowed

The *TARGET VFD SPEED*, *ACTUAL VFD SPEED* and the *VFD GAIN* can be viewed and modified in the CAPACITY display screen. The *TARGET VFD SPEED* can be manually overridden by the operator from the COMPRESS screen. The *VFD MINIMUM SPEED*, *MAXIMUM SPEED*, *VFD GAIN* and *VFD INCREASE STEP* can be viewed and modified in the SETUP2 display screen. *TARGET* and *ACTUAL VFD SPEED* can be viewed in the COMPRESS screen.

ECW CONTROL OPTION — If this option is enabled, the PIC II uses the *ENTERING CHILLED WATER* temperature to modulate the vanes instead of the *LEAVING CHILLED WATER* temperature. The *ECW CONTROL OPTION* may be viewed on the TEMP_CTL screen, which is accessed from the EQUIPMENT SERVICE screen.

CONTROL POINT DEADBAND — This is the tolerance range on the chilled water/brine temperature control point. If the water temperature goes outside the *CHILLED WATER DEADBAND*, the PIC II opens or closes the guide vanes until the temperature is within tolerance. The PIC II may be configured with a 0.5 to 2 F (0.3 to 1.1 C) deadband. *CHILLED WATER DEADBAND* may be viewed or modified on the SETUP1 screen, which is accessed from the EQUIPMENT SERVICE table.

For example, a 1° F (0.6° C) deadband setting controls the water temperature within ±0.5° F (0.3° C) of the control point. This may cause frequent guide vane movement if the chilled water load fluctuates frequently. A value of 1° F (0.6° C) is the default setting.

A deadband is a span of measurement in which a controller takes no action. In the PIC controls it is a temperature range centered on the *CONTROL POINT*. If the *LEAVING CHILLED WATER TEMP* falls within the *CHILLED WATER DEADBAND*, the guide vanes will not move.

The purpose of the deadband is to prevent slight fluctuations in *ENTERING CHILLED WATER TEMPERATURE* from keeping the guide vanes in constant movement.

Adjusting The Deadband — The default setting of the *CHILLED WATER DEADBAND*, is 1°F, which is 0.5° F above and below the *CONTROL POINT*. The *CONTROL POINT* setting range is 0.5 to 2° F. If temperature control is satisfactory and the guide vanes are stable, do not change the setting.

When very close temperature control is required, as for some process applications, the deadband may be reduced.

When constant small load changes occur in a system and the vanes will not stabilize, increase the size of the deadband. The deadband must always be smaller than the allowable drift in leaving water temperature.

PROPORTIONAL BANDS — The proportional bands control how far the guide vanes will move in response to a specific change in leaving water temperature. Increasing the proportional band increases the amount that the water temperature must move away from the control point in order to move the guide vanes a specific amount. Decreasing the proportional band allows the vanes to move the same amount with a smaller change in water temperature.

If the proportional band is too large, the leaving water temperature will increase or decrease slowly enough that the temperature moves away from the control point by an unacceptable amount. A proportional band set too low will cause the leaving temperature to overshoot the control point and cause the guide vanes to "hunt."

The PIC controls have separate proportional bands for increasing and decreasing capacity. The *PROPORTIONIONAL INCREASE BAND* should be set as described above. The *PROPORTIONIONAL DECREASE BAND* should be set at a typically smaller value than the increasing band so that the guide vanes can close quickly enough on a sudden drop in load to prevent a low temperature safety trip.

Proportional Entering Chilled Water Gain — When Entering Chilled Water Control is enabled the controls are resetting the Leaving Chilled Water (LCW) control point every 10 seconds in order to keep the *ENTERING CHILLED WATER TEMP* at the *ENTERING CHILLED WATER (ECW) SETPOINT.*

The *ECW GAIN* affects the size of the *LCW CONTROL POINT* change in proportion to the difference between the *ECW SETPOINT* and ECW TEMPERATURE.

NOTE: Before enabling *ENTERING CHILLED WATER CONTROL* and before tuning the *ECW GAIN*, the *LCW PROPORTIONAL BANDS* and *LCW DEADBAND* should be adjusted satisfactorily.

Increase the *ECW GAIN* if the *ENT CHILLED WATER TEMP* drifts away from the *ECW SETPOINT*. Reduce the *ECW GAIN* if the *ENT CHILLED WATER TEMP* swings above and below the *ECW SETPOINT*. Because the water must travel around the entire loop before the controls receive feedback on the effect of the *LCW CONTROL POINT*, the chilled water loop should be given the opportunity to stabilize before the gain is adjusted. The following example shows how the Entering Chilled Water Control works to move the vanes based on the rate of change of the *ENT CHILLED WATER TEMP* as well as the by the difference between *ENT CHILLED WATER TEMP* and *ECW SETPOINT*.

Effect of Proportional Entering Chilled Water Band (ECW Gain) (See Fig. 24)

Error = the contribution of the ECW control to the total error that inputs to the guide vane control. Positive error drives the vanes open. Negative error drives the vanes closed.

ECW set point = 47 F

ECW = Entering Chilled Water

ECW-10 = Entering Chilled Water 10 seconds previous

Example 1 — The first section of Fig. 24 shows the entering water dropping with a constant rate. The ECW algorithm is reducing its effort to open the guide vanes. After the entering water temperature drops below the setpoint the error drops below zero and thus is trying to close the vanes.

Example 2 — The second section shows the water temperature dropping but at a decreasing rate as shown by the reduction in the difference between ECW and ECW-10. The error value is leveling at zero but takes a dip because the entering water temperature drops below the set point.

Example 3 — The third section of Fig. 24 shows the entering chilled water temperature increasing. Again the error starts to level off or drop as the temperature change over 10 seconds becomes smaller.

DIFFUSER CONTROL — On all units with Frame 5 compressors and those Frame 4 compressors with the variable (split ring) diffuser option, the PIC II adjusts the diffuser actuator position based on the ACTUAL GUIDE VANE POSITION, then adjusts from that position using Carrier's Variable Diffuser Optimization (VDO) algorithm. Configurations for VDO are produced by the Carrier's chiller selection program and are entered into the VDO_SRD screen. The starting point diffuser schedule consists of guide vane and diffuser positions for three points (designated as the 25%, 50%, and 75% Load Points). In order for the schedule to be valid, the guide vane values must be ascending and the diffuser values must be descending for the three points. Figure 25 shows the starting point relationship between diffuser related parameters for a typical build. 0% output corresponds to a full open diffuser. The minimum closed position (25% Load Point value) will be at less than 100% for most diffusers (depending upon the model).

Diffuser control output is enabled whenever the DIFFUSER OPTION is enabled, whether the machine is running or not. The diffuser position adjusts from the specific relationship to the guide vane position, and is adjusted based on several factors: guide vane position, compressor lift, rotating stall and surge conditions. The diffuser and guide vanes will both move in Guide Vane Control Test but the relative positions do not represent the relative position of these actuators during operation; the diffuser and the guide vane operate independently. Using the Controls Test, the diffuser can be incremented from fully open to completely closed. A 0% output is fully open; the setting is completely closed when the value equals that of the Diffuser 25% Load Point value. The configurations for VDO Diffuser Control are found on a label on the back of the control panel. See Fig. 13. If you do not have the correct settings for VDO Diffuser Control contact a Carrier Engineering Representative.

The diffuser actuator should NOT be configured to a percent that is greater than the factory set Diffuser 25% Load Point value as the diffuser will be at a mechanical stop for its fully closed position.

IMPORTANT: Do not alter the factory settings for VDO Diffuser Control without consulting with Carrier Engineering. Incorrect settings could cause the machine to repeatedly shut down on rotating stall alarm or surge.

A diffuser pressure transducer is installed on compressors with a split ring diffuser. The CCM monitors pressure fluctuations at the inlet to the inner diffuser ring. Excessive pressure fluctuations may indicate that the impeller is experiencing pressure pulsations known as rotating stall. A Diffuser Position Fault (Alarm 247) is declared if pressure fluctuations exceed acceptable limits.

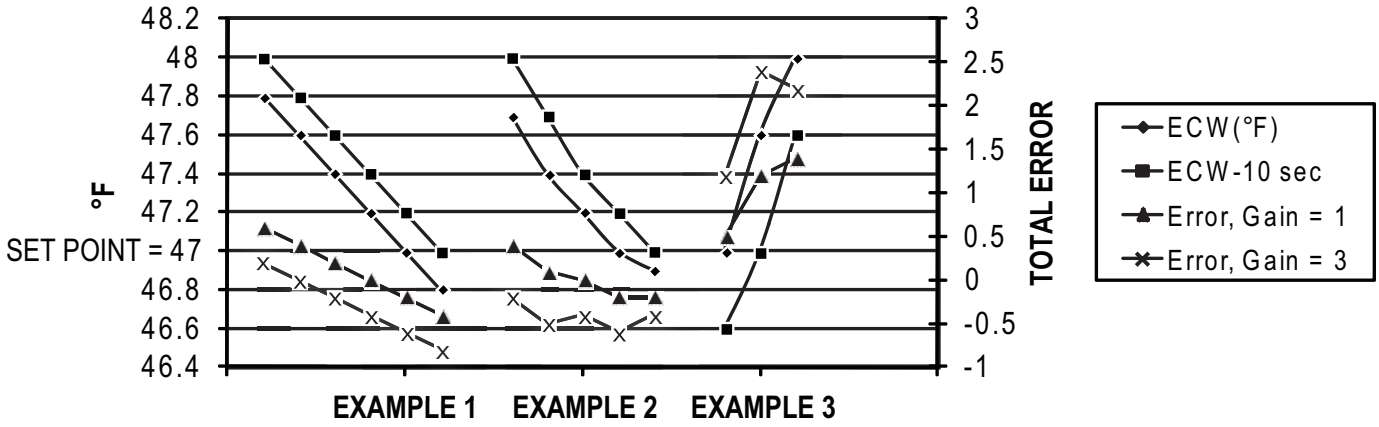

Fig. 24 — Transient Example of ECW Gain

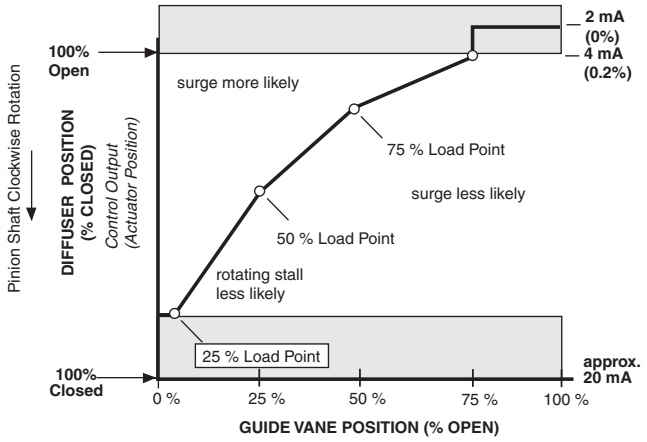

* DIFFUSER FULL SPAN MA.

Fig. 25 — Diffuser Control

DEMAND LIMITING — The PIC II controls provide a feature for limiting AVERAGE LINE CURRENT or LINE KILOWATTS (demand) by limiting capacity via guide vane control. The limit applied is called ACTIVE DEMAND LIMIT, which is equal to a BASE DEMAND LIMIT value (set in the SETPOINTS Screen, page 33, default value 100%), or that determined by AUTO DEMAND LIMIT INPUT (an optional 4 to 20 mA input, described below). ACTIVE DEMAND LIMIT may also be forced to be different from BASE DEMAND LIMIT by manually overriding the value (forcing) from the MAINSTAT screen or writing a value via a CCN network device, or controlled by another chiller in Lead Lag operation (see page 58).

The demand limit may be based on either line current or kW, as indicated by *DEMAND LIMIT SOURCE* in the EQUIPMENT SERVICE/RAMP_DEM table. The default is 0, for demand limiting based on AVERAGE LINE CURRENT (percent of RATED LINE AMPS, as displayed on the default screen). Setting DEMAND LIMIT SOURCE to 1 makes demand limiting based on PERCENT LINE KILOWATTS (displayed in the MAINSTAT screen). *MOTOR PERCENT KILOWATTS* is equal to (*MOTOR KILOWATTS ÷MOTOR RATED KILOWATTS*) ×100. *MOTOR KILOWATTS* is measured by the ISM and the *MOTOR RATED KILOWATTS* value (100% rated kW) is set on the RAMP_DEM screen.

If the DEMAND LIMIT SOURCE (average line current) exceeds the ACTIVE DEMAND LIMIT by 5% or less, increases in guide vane opening will be prevented. If the DEMAND LIMIT SOURCE (percent line current) exceeds the ACTIVE DEMAND LIMIT by more than 5%, the guide vanes will be forced to close. Also, as the DEMAND LIMIT SOURCE approaches the ACTIVE DEMAND LIMIT from a lower value, allowable capacity increases become increasingly more limited, beginning when the DEMAND LIMIT SOURCE is within the DEMAND LIMIT PROP BAND (configurable in the RAMP_DEM table).

Demand Limit Control Option — The demand limit control option (20 mA DEMAND LIMIT OPT) is externally controlled by a 4 to 20 mA signal from an energy management system (EMS). The option is set up on the RAMP_DEM screen. When enabled, 4 mA will set ACTIVE DEMAND LIMIT to 100% of the DEMAND LIMIT SOURCE (regardless of the value of BASE DEMAND LIMIT), and 20 mA will set ACTIVE DEMAND LIMIT to the value configured as "20MA DEMAND LIMIT OPT" in the RAMP_DEM table.

Wire the auto demand limit to terminals J5-1 (-) and J5-2 (+) on the CCM. In order to use a 1 to 5 vdc input instead of 4 to 20 mA, install a 25-ohm resistor in series with the + lead at terminal J5-2. The associated dip switch should remain in the up (on) position despite the notation on the CCM board. See Fig. 26.

A DEMAND KILOWATTS monitoring feature is also available. This feature provides a display of average demand (power) in kilowatts (in the POWER screen). This value is continuously updated and averaged over the preceding time interval specified as *DEMAND WATTS INTERVAL* in the SERVICE / EQUIPMENT SERVICE/RAMP_DEM screen.

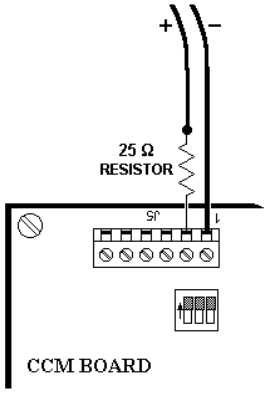

Fig. 26 — Auto Demand Limit Wiring (1 to 5 vdc)

CHILLER TIMERS AND STARTS COUNTER — The PIC II maintains two run time clocks: COMPRESSOR ONTIME and SERVICE ONTIME. COMPRESSOR ONTIME indicates the total lifetime compressor run hours. SERVICE ONTIME is a resettable timer that can be used to indicate the hours since the last service visit or any other event. A separate counter tallies compressor starts as TOTAL COMPRESSOR STARTS. All of these can be viewed on the MAINSTAT screen on the ICVC. Both ontime counters roll over to 0 at 500,000 hours. Manual changes to SERVICE ONTIME from the ICVC (or forced via the Service Tool) are permitted at any time. If the controller is replaced, one opportunity, before the first start-up with the new controller, is provided to set COMPRESSOR ONTIME and TOTAL COMPRESSOR STARTS to the last readings retained with the prior controller. The *SERVICE ONTIME* timer can register up to 32,767 hours before it rolls over to zero.

The chiller also maintains a start-to-start timer and a stop-to-start timer. These timers limit how soon the chiller can be started. *START INHIBIT TIMER* is displayed on the MAINSTAT screen. See the Start-Up/Shutdown/Recycle Sequence section, page 63, for more information on this topic.

OCCUPANCY SCHEDULE — The chiller schedule, described in the Time Schedule Operation section (page 26), determines when the chiller can run. Each schedule consists of from 1 to 8 occupied or unoccupied time periods, set by the operator. The chiller can be started and run during an occupied time period (when *OCCUPIED?* is set to YES on the MAINSTAT display screen). It cannot be started or run during an unoccupied time period (when *OCCUPIED?* is set to NO on the MAINSTAT display screen). These time periods can be set for each day of the week and for holidays. The day begins with 0000 hours and ends with 2400 hours. The default setting for *OCCUPIED?* is YES, unless an unoccupied time period is in effect.

These schedules can be set up to follow a building's occupancy schedule, or the chiller can be set so to run 100% of the time, if the operator wishes. The schedules also can be bypassed by forcing the *CHILLER START/STOP* parameter on the MAINSTAT screen to START. For more information on forced starts, see Local Start-Up, page 63.

The schedules also can be overridden to keep the chiller in an occupied state for up to 4 hours, on a one time basis. See the Time Schedule Operation section, page 26.

Figure 22 shows a schedule for a typical office building with a 3-hour, off-peak, cool-down period from midnight to 3 a.m., following a weekend shutdown. Holiday periods are in an unoccupied state 24 hours per day. The building operates Monday through Friday, 7:00 a.m. to 6:00 p.m., and Saturdays from 6:00 a.m. to 1:00 p.m. This schedule also includes the Monday midnight to 3:00 a.m. weekend cool-down schedule.

NOTE: This schedule is for illustration only and is not intended to be a recommended schedule for chiller operation.

Whenever the chiller is in the LOCAL mode, it uses Occupancy Schedule 01 (OCCPC01S). When the chiller is in the ICE BUILD mode, it uses Occupancy Schedule 02 (OCCPC02S). When the chiller is in CCN mode, it uses Occupancy Schedule 03 (OCCPC03S). The default setting for both LOCAL and CCN schedules is OCCUPIED all of the time.

The CCN SCHEDULE NUMBER is configured on the NET_OPT display screen, accessed from the EQUIPMENT CONFIGURATION table. See Table 3, Example 16. *SCHEDULE NUMBER* can be changed to any value from 03 to 99. If this number is changed on the NET_OPT screen, the operator must go to the ATTACH TO NETWORK DEVICE screen to upload the new number into the SCHEDULE screen. See Fig. 21.

Safety Controls — The PIC II monitors all safety control inputs and, if required, shuts down the chiller or limits the guide vanes to protect the chiller from possible damage from any of the following conditions:

- high bearing temperature
- high motor winding temperature
- high discharge temperature
- low discharge superheat*
- low oil pressure
- low cooler refrigerant temperature/pressure
- condenser high pressure or low pressure
- inadequate water/brine cooler and condenser flow
- high condenser water pressure drop (optional)
- high, low, or loss of voltage
- ground fault
- voltage imbalance
- current imbalance
- excessive motor acceleration time
- excessive starter transition time
- lack of motor current signal
- excessive motor amps
- excessive compressor surge
- temperature and transducer faults

*Superheat is the difference between saturation temperature (CONDENSER REFRIGERANT TEMPERATURE) and sensible temperature (COMPRESSOR DISCHARGE TEMPERATURE). The high discharge temperature safety measures only sensible temperature.

Faults or protective devices within the optional VFD can shut down the chiller.

⚠ CAUTION

If compressor motor overload occurs, check the motor for grounded or open phases before attempting a restart.

If the PIC II control initiates a safety shutdown, it displays the reason for the shutdown (the fault) on the ICVC display screen along with a primary and secondary message, energizes an alarm relay in the starter, and blinks the alarm light on the control panel. The alarm is stored in memory and can be viewed on the ALARM HISTORY and ISM_HIST screens on the ICVC, along with a message for troubleshooting. If the safety shutdown was also initiated by a fault detected in the motor starter, the conditions at the time of the fault will be stored in ISM_HIST.

To give more precise information or warnings on the chiller's operating condition, the operator can define alert limits on various monitored inputs in the SETUP1 screen. A partial list of protective safety and alert limits is provided in Table 6. A complete list of alarm and alert messages is provided in the Troubleshooting Guide section on page 97.

Pump and Fan Control — The Carrier PIC controls are designed to control when cooler and condenser water pumps and tower fans are turned on and off. This is accomplished through a series of relay contacts on the ISM within the starter or optional VFD, and interface terminals are provided at ISM terminal strip J9 (refer to the Carrier Installation Instructions and certified drawings). If primary control of water pumps and tower fans is provided by customer-installed devices, a parallel means for the Carrier controls to independently operate the pumps must also be provided to protect against freeze-up.

Shunt Trip (Option) — A main circuit breaker shunt trip device is provided standard as a safety trip with all unit-mounted starters, and is optional on other starters and some VFDs. When a shunt trip is provided, it is wired from an output on the ISM to the associated coil on the shunt trip equipped motor circuit breaker. The shunt trip is activated by ISM logic, based on values entered in the ISM_CONF table, under any of the following conditions:

- Motor locked rotor amps limit exceeded
- Starter locked rotor amps rating exceeded
- Ground fault or phase-to-phase current fault limit exceeded (when that option is included)
- Significant motor current detected more than 20 seconds after a shutdown or otherwise when the chiller is off
- 1M and 2M auxiliary contacts closed when the chiller is off.

In addition, starters may be designed to shunt trip based on other starter-specific conditions or features. For example, Benshaw solid-state starters include several such protective circuits. The shunt trip is also activated if *EVAPORATOR PRESSURE* drops below 0 psig (0 kPa). The Shunt Trip feature can be tested using the Control Test feature.

Function Loss Trip — The Function Loss Trip device is provided standard as a safety trip with all unit-mounted VFDs. When provided, the function loss trip is wired from an output on the ISM to the VFD regulator board on the function loss terminal. The function loss trip is activated by ISM logic, based on values entered in the ISM _ CONF table.

Table 6 — Protective Safety Limits and Control Settings

MONITORED PARAMETER	STATE	LIMIT	COMMENTS
Temperature Sensors Out of Range	260-270, 272,140, 141	Temperature <-40 deg F or >245 deg F for 3 seconds	Preset Alarm
Pressure Transducers Out of Range	260-270	.06>Voltage Ratio>.98 for 3 seconds, Valid Range is > -6.7 PSI and < 420 PSI	Preset Alarm, Voltage Ratio=Input Voltage/ Voltage Reference (5 Volts)
Compressor Discharge Temperature	231	COMP DISCHARGE TEMP > 220 deg F (104.4 deg C)	Preset Alarm,
	149	COMP DISCHARGE TEMP > COMP DISCHARGE ALERT	Configure COMP DISCHARGE ALERT in SETUP1 screen
	103	COMP DISCHARGE TEMP > COMP DISCHARGE ALERT - 10 deg F(5.6 deg C)	Prestart Alert, Configure COMP DISCHARGE ALERT in SETUP1 screen
Motor Winding Temperature	233	COMP MOTOR WINDING TEMP > 220 deg F (104 deg C)	Preset Alarm, Configure COMP MOTOR TEMP OVERRIDE in SETUP1 screen
	102	COMP MOTOR WINDING TEMP > COMP MOTOR TEMP OVERRIDE - 10 deg F (5.6 deg C)	Prestart Alert, Configure COMP MOTOR TEMP OVERRIDE in SETUP1 screen
Compressor Thrust Bearing Temperature	101	COMP THRUST BRG TEMP > COMP THRUST BRG ALERT - 10 deg F (5.6 deg C)	Prestart Alert, Configure COMP THRUST BRG ALERT in SETUP1 screen
	150	COMP THRUST BRG TEMP > COMP THRUST BRG ALERT	Configure COMP THRUST BRG ALERT in SETUP1 screen (rolling element bearings have higher normal operating temperature but within limit)
	234	COMP THRUST BRG TEMP > COMP THRUST BRG TRIP	Configure COMP THRUST BEARING RESET FACTOR (default = 1.4). Trip point varied by THRUST BEARING RESET. See PIC II Functions > COMPRESSOR BEARING TEMPERATURE.
Low Refrigerant Temperature (Freeze Protection)	243	Chiller in RECYCLE SHUTDOWN and [CALC EVAP SAT TEMP or EVAP REFRIG LIQUID TEMP] < EVAP REFRIG TRIPPOINT + 1 deg F	Preset Alarm, configure EVAP REFRIG TRIPPOINT in SETUP1 screen
	232	**Water chilling**: EVAP REFRIG TEMP < 33 deg F **Brine Chilling:** EVAP REFRIG TEMP<0-40 deg F (configurable) and EVAP APPROACH > EVAP APPROACH ALERT	Preset Alarm, Configure EVAP APPROACH ALERT, EVAP REFRIG TRIP POINT and CHILLED MEDIUM in SETUP1 screen
	104	**Water Chilling:** CALC EVAP SAT TEMP or EVAP REFRIG LIQUID TEMP < 33 deg F + REFRIG OVERRIDE DELTA T **Brine Chilling:** CALC EVAP SAT TEMP or EVAP REFRIG LIQUID TEMP < EVAP REFRIG TRIPPOINT	Prestart Alert, Configure REFRIG OVERRIDE DELTA T, EVAP REFRIG TRIPPOINT and CHILLED MEDIUM in SETUP1 screen
Transducer Voltage Fault	239	Voltage Reference < 4.5 VDC or > 5.5 VDC	Preset Alarm
High Condenser Pressure - Control	235	CONDENSER PRESSURE > 165 PSI	Preset Alarm, Configure COND PRESS OVERRIDE in SETUP1 screen
High Condenser Pressure - Prestart	106	CONDENSER PRESSURE > COND PRESS OVERRIDE - 20 PSI or CONDENSER PRESSURE > 145 PSI	Prestart Alert, Configure COND PRESS OVERRIDE in SETUP1 screen. Causes condenser pump to start and remain on through startup.
Low Discharge Superheat	240	DISCHARGE SUPERHEAT < SUPERHEAT REQUIRED - 3 deg F(1.7 deg C) for 60 seconds. SUPERHEAT REQUIRED is calculated for current conditions.	Preset Alarm, DISCHARGE SUPERHEAT = COMP DISCHARGE TEMP - CONDENSER REFRIG TEMP
Condenser High Pressure Switch Circuit	207	High Pressure Switch Circuit Open and START = YES and CONDENSER PRESSURE > 160 PSI	Preset Alarm, High Pressure Switch *resets* at 110 +/-7 PSIG
	224	High Pressure Switch Circuit Open, START = YES and CONDENSER PRESSURE < 160 PSI	Preset Alarm, High Pressure Switch *resets* at 110 +/-7 PSIG
	235	CONDENSER PRESSURE >165	PRESET ALARM
Low Condenser Pressure (Freeze Protection)	244	Energizes condenser pump relay if Chiller in PUMPDOWN mode and CONDENSER REFRIG TEMP < CONDENSER FREEZE POINT De-energizes condenser pump relay when [CONDENSER REFRIG TEMP > CONDENSER FREEZE POINT + 5 deg F (2.8 deg C)] and [ENTERING COND LIQUID > CONDENSER FREEZE POINT]	Preset Alarm, Configure CONDENSER FREEZE POINT in SETUP1 screen.
	154	Energizes condenser pump relay if CONDENSER REFRIG TEMP < CONDENSER FREEZE POINT. De-energizes condenser pump relay when [CONDENSER REFRIG TEMP > CONDENSER FREEZE POINT + 5 deg F (2.8 deg C)] and [ENTERING COND LIQUID > CONDENSER FREEZE POINT]	Preset Alarm, Configure CONDENSER FREEZE POINT in SETUP1 screen.
Oil - Low Pressure	228	[OIL PRESSURE DELTA P < 18 PSID and START = TRUE] or [OIL PRESSURE DELTA P < 15 PSID and startup complete after OIL PRESS VERIFY TIME elapsed]	Preset Alarm, Configure OIL PRESS VERIFY TIME in SETUP1 screen

Table 6 — Protective Safety Limits and Control Settings (cont)

MONITORED PARAMETER	STATE	LIMIT	COMMENTS
Low Pressure	142	OIL PRESSURE DELTA P < 18 PSID and startup complete	Preset Alert
Oil - Pressure Sensor Fault	227	OIL PRESSURE DELTA P > 4 PSI immediately before oil pump turned on	Preset Alarm
Oil - Low Temperature	105	OIL SUMP TEMP < 150 deg F and [OIL SUMP TEMP < CALC EVAP SAT TEMP + 50 deg F(27.8 deg C)]	Prestart Alert
Line Voltage - High	211/145	Line voltage > 150 % MOTOR RATED LINE VOLTAGE for 1 second	Preset Alarm / Alert if Autorestart is enabled
	211/145	Line voltage > 115 % MOTOR RATED LINE VOLTAGE for 10 seconds	
	211/145	Line voltage > OVERVOLTAGE THRESHOLD for OVER/UNDER VOLTAGE TIME	Configure OVERVOLTAGE THRESHOLD and OVER/UNDER VOLT TIME in ISM_CONF screen
	108	AVERAGE LINE VOLTAGE > OVERVOLTAGE THRESHOLD	Configure OVERVOLTAGE THRESHOLD in ISM_CONF screen
Line Voltage - Low	212/146	AVERAGE LINE VOLTAGE < 75% MOTOR RATED LINE VOLTAGE for 1 second OR AVERAGE LINE VOLTAGE < 80% MOTOR RATED LINE VOLTAGE for 5 seconds OR AVERAGE LINE VOLTAGE < 85% MOTOR RATED LINE VOLTAGE for 10 seconds OR AVERAGE LINE VOLTAGE < UNDERVOLTAGE THRESHOLD for > OVER/UNDER VOLTAGE TIME	Preset Alarm/Alert Configure UNDERVOLTAGE THRESHOLD and OVER/UNDER VOLT TIME in ISM_CONF screen
	107	PERCENT LINE VOLTAGE < UNDERVOLTAGE THRESHOLD	Prestart Alert, Configure UNDERVOLTAGE THRESHOLD in ISM_CONF screen
Line Voltage - imbalance	216	Line Voltage Imbalance > VOLTAGE % IMBALANCE for > VOLTAGE IMBALANCE TIME	Configure VOLTAGE % IMBALANCE and VOLTAGE IMBALANCE TIME in ISM_CONF screen
Line Current -Single Cycle Dropout	210/144	Line Voltage on 2 Phases < 50% for 1 Cycle	Preset Alarm/Prestart Alert, Configure SINGLE CYCLE DROPOUT in ISM_CONF screen
Current Imbalance	215	Line Current Imbalance > CURRENT % IMBALANCE for > CURRENT IMBALANCE TIME	Configure CURRENT % IMBALANCE and CURRENT IMBALANCE TIME in ISM_CONF screen
Power - Line Frequency Out of Range	222	LINE FREQUENCY [<56 Hz or > 64 Hz] (60 Hz), LINE FREQUENCY [<46 Hz or > 54 Hz] (50 HZ)	Preset Alarm
Phase Loss	209/143	Any LINE VOLTAGE PHASE < 50% MOTOR RATED LINE VOLTAGE	Condition must persist for 2 seconds
	209/143	Minimum LINE CURRENT PHASE < 1/16 Maximum LINE CURRENT PHASE and Maximum LINE CURRENT PHASE > 5% MOTOR RATED LOAD AMPS	Condition must persist for *1* seconds
ISM Power on Reset	213/147	Loss of control power (brownout < 97 volts) to ISM for excessive time period	Preset Alarm
ICVC Power on Reset	214/148	Loss of control power (<18 volts) to ICVC for excessive time period	Preset Alarm
Communication - Loss of Communication	242	SIO Communication between ICVC and CCM lost for more than 5 seconds	Preset Alarm
Loss of Communication with Starter	241	SIO Communication between ICVC and ISM lost for more than 5 seconds	Preset Alarm
1M Aux. contact fault	200	Aux. contacts open with 1CR = ON + 3 sec.	Preset Alarm
2M Aux. contact fault	201	Aux. contacts open with 1CR/Transition = ON + 3 Sec	Preset Alarm
Starter Fault	206	Starter Fault = Open w/1CR = ON	Preset Alarm, Check starter safety circuit
Compressor Surge	238	> 4 surge protection counts within SURGE TIME PERIOD and VFD SPEED > 90%	Preset Alarm, Configure SURGE DELTA% AMPS and SURGE TIME PERIOD in OPTIONS screen
Surge	236	> 4 surge protection counts within SURGE TIME PERIOD and VFD SPEED < 90%	Preset Alarm, Configure SURGE DELTA% AMPS and SURGE TIME PERIOD in OPTIONS screen

Table 6 — Protective Safety Limits and Control Settings (cont)

MONITORED PARAMETER	STATE	LIMIT	COMMENTS
Overload Trip	217	Any LOAD CURRENT PHASE > 108% for Excessive Time Period	Preset Alarm, Force ACTIVE DEMAND LIMIT in MAINSTAT screen
Locked Rotor Trip	218	Motor Locked Rotor Amps exceeded	Preset Alarm
Excessive Amps	208	PERCENT LOAD CURRENT > 110% for 30 sec.	Preset Alarm
Acceleration Fault (full voltage)	203	PERCENT LOAD CURRENT >100% at 10 sec after 1CR closes (across the line)	Preset Alarm, PERCENT LOAD CURRENT = AVERAGE LOAD CURRENT/ MOTOR RATED LOAD AMPS
Acceleration Fault (reduced voltage)	203	PERCENT LOAD CURRENT >150% at 20 sec after 1CR closes (reduced voltage)	Preset Alarm, PERCENT LOAD CURRENT = AVERAGE LOAD CURRENT/ MOTOR RATED LOAD AMPS
	203	PERCENT LOAD CURRENT >100% at 45 sec after 1CR closes (reduced voltage)	Preset Alarm, PERCENT LOAD CURRENT = AVERAGE LOAD CURRENT/ MOTOR RATED LOAD AMPS
Amps not Sensed	202	PERCENT LOAD CURRENT < 15% w/1M/2M closed	Preset Alarm, PERCENT LOAD CURRENT = AVERAGE LOAD CURRENT/ MOTOR RATED LOAD AMPS
Amps when Stopped	205	Amp signal > 10% w/1M/2M open	preset alarm
Failure to Stop	204	1M/2M contacts fail to open	Shunt trip, if equipped
	205	MOTOR AMPS WHEN STOPPED (Amps > 10% w/ 1CR OFF)	Shunt trip, if equipped
Starts Limit Exceeded	100	More than 8 starts in 12 hours	Preset Prestart Alert
Low Chilled Water Flow	229	CHILLED LIQUID DELTA P < EVAP FLOW DELTA P CUTOUT OR EVAPORATOR APPROACH > EVAP APPROACH ALERT AND EVAP REFRIG LIQUID TEMP < EVAP REFRIG TRIPPOINT + 1 OR CALC EVAP SAT TEMP < EVAP REFRIG TRIPPOINT	Optional Alarm With ICVC DSABLE FLOW DELTA P DISPLAY in SETUP1 screen Optional Alarm, All limits configurable in SETUP1 screen
Low Cond Water Flow	230	CONDENSER LIQUID DELTA P < COND FLOW DELTA P CUTOUT OR CONDENSER APPROACH > CONDENSER APPROACH ALERT OR CONDENSER PRESSURE > COND PRESS OVERRIDE + 5	Optional Alarm With ICVC DSABLE FLOW DELTA P DISPLAY in SETUP1 screen
High Approach - Evaporator	162	EVAPORATOR APPROACH > EVAP APPROACH ALERT and startup complete	Configure EVAP APPROACH ALERT in SETUP1 screen
Condenser	163	CONDENSER APPROACH > COND APPROACH ALERT and startup complete	Configure COND APPROACH ALERT in SETUP1 screen
VFD - High VFD Speed	245	ACTUAL VFD SPEED > VFD SPEED OUTPUT + 10%	Preset Alarm, Must be outside +10% threshold for 30 sec.
Starter Transition - 2M Start/Run Fault	201	ISM 2M aux contact not closed after 20 sec from start	Reduced voltage starters only
Ground Fault	220	GROUND FAULT CURRENT > GROUND FAULT AMPS	Configure GROUND FAULT AMPS in ISM_CONF screen
Optional Limits - Spare Temperature	158/159	SPARE TEMPERATURE > or < SPARE TEMP LIMIT	Optional Alarm/Alert, Confirure SPARE TEMP ENABLE and SPARE TEMP LIMIT in SETUP1 screen
Guide Vane Position	253	During startup: ACTUAL GUIDE VANE POSITION value> 4% after 4 minutes of closing; After startup complete and running: (AGV) POSITION value > 103% or < -1%; (AGV) POS voltage input < 0.045 volts or > 3.25 volts	Preset Alarm
High Condenser Water Flow	254	CONDENSER WATER DELTA P > CONDENSER HIGH FLOW DELTA P LIMIT for more than 2 minutes.	Optional Alarm. Configure COND HI FLOW DEL P LIMIT in SETUP1 screen
Variable Diffuser Operation	247	Detects discharge pulses caused by incorrect diffuser position.	Preset Alarm. Transducer measures pulses, no on-screen pressure reading. No calibration needed.

Default Screen Freeze — When the chiller is in an alarm state, the default ICVC display "freezes," that is, it stops updating. The first line of the ICVC default screen displays a primary alarm message; the second line displays a secondary alarm message.

The ICVC default screen freezes to enable the operator to see the conditions of the chiller *at the time of the alarm*. If the value in alarm is one normally displayed on the default screen, it flashes between normal and reverse contrast. The ICVC default screen remains frozen until the condition that caused the alarm is remedied by the operator. Use ICVC display and alarm shutdown record sheet (CL-15) to record all values from default screen freeze.

Knowledge of the operating state of the chiller at the time an alarm occurs is useful when troubleshooting. Additional chiller information can be viewed on the status screens and the ISM_HIST screen. Troubleshooting information is recorded in the ALARM HISTORY table, which can be accessed from the SERVICE menu.

To determine what caused the alarm, the operator should read both the primary and secondary default screen messages, as well as the alarm history. The primary message indicates the most recent alarm condition. The secondary message gives more detail on the alarm condition. Since there may be more than one alarm condition, another alarm message may appear after the first condition is cleared. Check the ALARM HISTORY screen for additional help in determining the reasons for the alarms. Once all existing alarms are cleared (by pressing the RESET softkey), the default ICVC display returns to normal operation.

Ramp Loading — The ramp loading control slows down the rate at which the compressor loads up. This control can prevent the compressor from loading up during the short period of time when the chiller is started and the chilled water loop has to be brought down to *CONTROL POINT*. This helps reduce electrical demand charges by slowly bringing the chilled water to *CONTROL POINT*. The total power draw during this period remains almost unchanged.

There are two methods of ramp loading with the PIC II. Ramp loading can be based on chilled water temperature or on motor load. Either method is selected from the RAMP__DEM screen.

1. Temperature ramp loading *(TEMP PULLDOWN RAMP)* limits the degrees per minute rate at which either leaving chilled water or entering chilled water temperature decreases. This rate is configured by the operator on the TEMP_CTL screen. The lowest temperature ramp loading rate will also be used if chiller power has been off for 3 hours or more (even if the motor ramp load is selected as the ramp loading method).

   NOTE: If chiller control power has been off for 3 hours or more, the next start-up (only) will follow the minimum configurable temperature ramp rate regardless of the ramp loading method and rate which are configured in the screens. This is used to maximize oil reclaim during start-up.
2. Motor load ramp loading (*MOTOR LOAD RAMP%/MIN*) limits the percent per minute rate at which the compressor motor current or compressor motor load increases. The LOAD PULLDOWN rate is configured by the operator on the RAMP_DEM screen in amps or kilowatts. The point name is *MOTOR LOAD RAMP%/MIN*.

If kilowatts is selected for the *DEMAND LIMIT SOURCE*, the *MOTOR RATED KILOWATTS* must be entered on the RAMP_DEM screen (information found on the chiller Requisition form).

The *TEMP PULLDOWN DEG/MIN* may be viewed or modified on the TEMP_CTL screen which is accessed from the EQUIPMENT SERVICE screen. *PULLDOWN RAMP TYPE, DEMAND LIMIT SOURCE*, and *MOTOR LOAD RAMP %/MIN* may be viewed or modified on the RAMP_DEM screen.

Rampdown — The Rampdown control applies to VFD equipped chillers. At machine start-up the VFD speed is set to "Start Speed" which is the lower of *VFD MAXIMUM SPEED* or the configured value of *VFD START SPEED*. *VFD START SPEED* is configured on the SETUP2 screen. After Ramp Loading is complete the control begins to reduce the VFD speed. Speed reduction continues until the leaving water temperature is within the control point dead band and any condition is reached that would require the VFD speed to hold or increase. The chiller is then out of Rampdown and running in normal capacity control.

Capacity Override (Table 7) — Capacity overrides can prevent some safety shutdowns caused by exceeding the motor amperage limit, refrigerant low temperature safety limit, motor high temperature safety limit, and condenser high pressure limit. In all cases there are 2 stages of compressor vane control.

1. When the value of interest crosses the First Stage Set Point into the Override Region, the guide vanes are prevented from opening further, and the status line on the ICVC indicates the reason for the override. Normal capacity control operation is restored when the value crosses back over the First Stage Set Point, leaving the Override Region. See Table 7.
2. When the value of interest is in the Override Region and further crosses the Second Stage Set Point, the guide vanes are closed until the value meets the Override Termination Condition. The PIC II controls resume normal capacity control operation after the override termination condition has been satisfied. (In the case of high discharge superheat, there is an intermediate stage.)

Whenever the motor current demand limit set point (*ACTIVE DEMAND LIMIT*) is reached, it activates a capacity override, again, with a 2-step process. Exceeding 110% of the rated load amps for more than 30 seconds will initiate a safety shutdown.

The compressor high lift (surge prevention) set point will cause a capacity override as well. When the surge prevention set point is reached, the controller normally will only prevent the guide vanes from opening. If so equipped, the hot gas bypass valve will open instead of holding the vanes. See the Surge Prevention section, page 55.

If the chiller is VFD-equipped, the guide vanes will be allowed to open during surge prevention if the VFD is at 100% speed or forced and the chiller is in Ramp Loading or in Rampdown. Opening the vanes will assist in loading the compressor to bring it out of the surge prevention range.

High Discharge Temperature Control — If the discharge temperature increases above 160 F (71.1 C), the guide vanes are proportionally opened to increase gas flow through the compressor. If the leaving chilled water temperature is then brought 5° F (2.8° C) below the control set point temperature, the PIC II will bring the chiller into the recycle mode.

Compressor Bearing Temperature — The thrust bearing temperature (MTRB) is a calculated value which is the temperature of the oil leaving the bearing plus an internal increment calculated with the *THRUST BRG RESET FACTOR*. The Comp Thrust Bearing Reset is calculated using the rate of change of the oil leaving the bearing. If the oil temperature is stable the *COMP THRUST BRG TEMP* equals the *COMP THRUST LVG OIL TEMP*. As the oil temperature rises, the *COMP THRUST BRG RESET* is calculated to account for any lag between actual bearing temperature and the temperature of the leaving oil.

In the SETUP1 screen an adjustment called the *THRUST BRG RESET FACTOR* is an adjustment to the *COMP THRUST BRG TEMP* calculation. The default value is 1.4 and will normally be left at that value unless other wise advised by Carrier Service Engineering.

Oil Sump Temperature and Pump Control — The oil sump temperature control is regulated by the PIC II, which uses the oil heater relay when the chiller is shut down.

As part of the pre-start checks executed by the controls, the oil sump temperature (*OIL SUMP TEMP*) is compared to the cooler refrigerant temperature (*EVAPORATOR REFRIG TEMP*). If the oil temperature is less than 150 F (65.6 C) and the difference between these 2 temperatures is 50 F (27.8 C) or less, the start-up will be delayed until either of these conditions is no longer true. Once this temperature is confirmed, the start-up continues.

The oil heater relay is energized whenever the chiller compressor is off and the oil sump temperature is less than 140 F (60.0 C) or the oil sump temperature is less than the evaporator refrigerant temperature plus 53° F (11.7° C). The oil heater is turned off when the oil sump temperature is either

- more than 152 F (66.7 C), or
- more than 142 F (61.1 C) and more than the evaporator refrigerant temperature plus 55° F (12.8° C).

Table 7 — Capacity Overrides

OVERRIDE CONDITION (Configurable Override Paramter)	FIRST STAGE SET POINT (Capacity Inhibit)			SECOND STAGE SET POINT (Forced Capacity Decrease)	OVERRIDE TERMINATION
	View/Modify on ICVC Screen	Override Default Value	Configurable Range	Value	Value
High Condenser Pressure (COND PRESS OVERRIDE)	SETUP1	CONDENSER PRESSURE > 125 PSIG (862 kPa)	90 to 165 PSIG (621 to 1138 kPa)	CONDENSER PRESSURE > COND PRESS OVERRIDE + 2.4 PSIG (16.5 kPA)	CONDENSER PRESSURE < CONDENSER PRESS OVERRIDE - 1 PSI (6.9 kPa)
High Motor Temperature (COMP MOTOR TEMP OVERRIDE)	SETUP1	COMP MOTOR WINDING TEMP > COMP MOTOR TEMP OVERRIDE threshold but <= COMP MOTOR TEMP OVERRIDE threshold +10° F	150 to 200 F (66 to 93 C)	COMP MOTOR WINDING TEMP > COMP MOTOR TEMP OVERRIDE + 10 F (5.6 C)	COMPR MOTOR WINDING TEMP < COMP MOTOR TEMP OVERRIDE - 2 F (1.1 C)
Low Evaporator Temperature (REFRIG OVERRIDE DELTA T)	SETUP1	CALC EVAP SAT TEMP < EVAP REFRIG TRIPPOINT + 3 F(1.7 C)	2 to 5 F (1.1 to 2.8 C)	CALC EVAP SAT TEMP < EVAP SAT OVERRIDE TEMP - 1 F (0.6 C) NOTE: EVAP SAT OVERRIDE TEMP = EVAP REFRIG TRIPPOINT + REFRIG OVERRIDE DELTA T	CALC EVAP SAT TEMP > EVAP SAT OVERRIDE TEMP + 2 F (1.1 C)
High Compressor Lift (Surge Prevention) (Tsmin, IGVmin, Tsmax, IGVmax, Shapefac)	OPTIONS	Tsmain: 45 ^F IGVmin: 5% Tsmax: 70 ^F IGVmax: 100% shapefac: -0.04	0 to 150 ^F 0 to 110% 0 to 150 ^F 0 to 110% -1 to 0	None	Active∆Tsat < Surge-Line ∆Tsat + Deadband Setting
Manual Guide Vane Target (TARGET GUIDE VANE POS)	COMPRESS	Automatic	0 to 100%	None	Press RELEASE softkey after selecting TARGET GUIDE VANE POS
Manual Speed Control (TARGET VFD SPEED)	COMPRESS	Automatic	VFD MINIMUM SPEED to 100%	Forced TARGET VFD SPEED cannot override either a capacity inhibit or a capacity decrease command generated by the PIC II	Press RELEASE softkey after selecting TARGET VFD SPEED
Motor Load (ACTIVE DEMAND LIMIT)	MAINSTAT	AVERAGE LINE CURRENT or MOTOR PERCENT KILOWATTS > 100%	40 to 100%	AVERAGE LINE CURRENT or MOTOR PERCENT KILOWATTS > ACTIVE DEMAND LIMIT + 5%	AVERAGE LINE CURRENT or MOTOR PERCENT KILOWATTS < ACTIVE DEMAND LIMIT
Low Discharge Superheat	OVERRIDE	ACTUAL SUPERHEAT < SUPERHEAT REQUIRED for conditions	None	ACTUAL SUPERHEAT < SUPERHEAT REQUIRED - 0.5 F (0.3 C)	ACTUAL SUPERHEAT > SUPERHEAT REQUIRED + 1 F (0.56 C)

The oil heater is always off during start-up or when the compressor is running.

The oil pump is also energized during the time the oil is being heated (for 30 seconds at the end of every 30 minutes).

The oil pump will not operate if the *EVAPORATOR PRESSURE* is less than –5 psig (–34.5 kPa).

Oil Cooler — The oil must be cooled when the compressor is running. This is accomplished through a small, plate-type heat exchanger (also called the oil cooler) located behind the oil pump. The heat exchanger uses liquid condenser refrigerant as the cooling liquid. Refrigerant thermostatic expansion valves (TXVs) regulate refrigerant flow to control the oil temperature entering the bearings. The bulbs for the expansion valves are strapped to the oil supply line leaving the heat exchanger, and the valves are set to maintain 110 F (43 C).

NOTE: The TXVs are not adjustable. The oil sump temperature may be at a lower temperature during compressor operations.

Remote Start/Stop Controls — A remote device, such as a timeclock that uses a set of contacts, may be used to start and stop the chiller. However, the device should not be programmed to start and stop the chiller in excess of 2 or 3 times every 12 hours. If more than 8 starts in 12 hours (the *STARTS IN 12 HOURS* parameter on the MAINSTAT screen) occur, an excessive starts alarm displays, preventing the chiller from starting. The operator must press the RESET softkey on the ICVC to override the starts counter and start the chiller. This ensures that, if the automatic system is malfunctioning, the chiller will not repeatedly cycle on and off.

If the *REMOTE START OPTION* is enabled, the remote start contacts must be closed for the *AUTO RESTART OPTION* (if enabled) to restart the chiller following a power failure.

Also, if the number of recycle shutdowns in a 4-hour period exceeds five, then alert message 152 is displayed (and logged into ALERT HISTORY) until the next required startup.

The contacts for remote start are wired into the starter at terminal strip J2, terminals 5 and 6 on the ISM. See the certified drawings for further details on contact ratings. The contacts must have 24 vac dry contact rating.

Spare Safety and Spare Temperature Inputs — Normally closed (NC) discrete inputs for additional field-supplied safeties may be wired to the spare protective limits input channel in place of the factory-installed jumper. (Wire multiple inputs in series.) The opening of any contact will result in a safety shutdown and a display on the ICVC. Refer to the certified drawings for safety contact ratings.

Extra analog temperature sensors may also be added to the CCM module *(SPARE TEMPERATURE #1* and *SPARE TEMPERATURE #2)* at terminals J4 25-26 and J4 27-28, respectively. The analog temperature sensors may be configured in the EQUIPMENT SERVICE/SETUP1 table to cause an ALERT (Enable value 1 or 2) or ALARM (Enable value 3 or 4), or neither (Enable value 0). An alarm will shut down a running chiller, but an alert will not. The fault condition will be triggered when crossing a high limit (Enable value 2 or 4) or low limit (Enable value 1 or 3), configurable between –40 F to 245 F (–40 C to 118 C). The spare temperature sensors are readable on the CCN network. They also have specific uses as common temperature sensors in a Lead/Lag system. See Appendix B.

Alarm (Trip) Output Contacts — One set of alarm contacts is provided in the starter. The contact ratings are provided in the certified drawings. The contacts are located on ISM terminal strip J9, terminals 15 and 16.

Refrigerant Leak Detector — An input is available on the CCM module [terminal J5-5 (–) and J5-6 (+)] for a refrigerant leak detector. Enabling *REFRIGERANT LEAK OPTION* (OPTIONS screen) will allow the PIC II controls to go into an alarm state at a user configured level (*REFRIGERANT LEAK ALARM mA*). The input is configured for 4 to 20 mA by setting the DIP switch 1 on SW2 at the ON position, or configured for 1 to 5 vdc by setting switch 1 at the OFF position. The output of the refrigerant leak detector is displayed as *REFRIGERANT LEAK SENSOR* on the MAINSTAT screen. For a 1 to 5 vdc input, 1 vdc input represents 4 mA displayed and 5 vdc input represents 20 mA displayed.

Kilowatt Output — An output is available on the CCM module [Terminal J8-1 (+) and J8-2 (–)] to represent the power consumption of the chiller if a constant speed starter is used. The 4 to 20 mA signal generated by the CCM module can be wired to the building automation or energy management system to monitor the chiller's energy consumption. The output is 2 mA with the chiller off. The signal varies linearly from 4 mA (representing 0% rated kilowatt consumption) to 20 mA (representing 100% rated kilowatt consumption). The rated peak kilowatt consumption is configured by the user in the RAMP_DEM display screen by the setting the *MOTOR RATED KILOWATTS* from the job data sheet.

Remote Reset of Alarms — A standard feature of the PIC II controls is the ability to reset a chiller in a shutdown alarm state from a remote location. If the condition which caused the alarm has cleared the chiller can be placed back into a normal CCN operating mode when the *REMOTE RESET OPTION* (ICVC_PSWD menu) is set to ENABLE. A variety of Carrier Comfort Network® software systems including ComfortVIEW™ or Network Service Tool™ can access the PIC II controls and reset the displayed alarm. Third party software from building automation systems (BAS) or energy management systems (EMS) can also access the PIC II controls through a UPC module and reset the fault displayed. Both methods would access the ICVC_PSWD screen and force the *RESET ALARM?* point to YES to reset the fault condition. If the PIC II controls have determined that is safe to start the chiller the *CCN MODE?* point (ICVC_PSWD screen) can be forced to YES to place the chiller back into normal CCN operating mode. The only exceptions are the following alarms that cannot be reset from a remote location: STATE numbers 100, 205, 217-220, 223, 233, 234, 247, and 250. To view alarm codes, refer to Troubleshooting Guide, Checking Display Messages, page 97. After the alarm has been reset the PIC II control will increment the *Starts in 12 Hours* counter by one upon restart. If the limit of 8 starts in a 12-hour period occurs, the alarm (Alert State 100) will be required to be reset at the chiller control panel (ICVC).

Condenser Pump Control — The chiller will monitor the condenser pressure (*CONDENSER PRESSURE*) and may turn on the condenser pump if the condenser pressure becomes too high while the compressor is shut down. The condenser pressure override (*COND PRESS OVERRIDE*) parameter is used to determine this pressure point. *COND PRESS OVERRIDE* is found in the SETUP1 display screen, which is accessed from the EQUIPMENT SERVICE table. The default value is 125 psig (862 kPa).

If the *CONDENSER PRESSURE* is greater than or equal to the *COND PRESS OVERRIDE*, and the entering condenser water temperature (*ENTERING CONDENSER WATER*) is less than 115 F (46 C), the condenser pump will energize to try to decrease the pressure and alert 151 will be generated. The pump will turn off when the condenser pressure is 3.5 psi (24.1 kPa) less than the pressure override or when the condenser refrigerant temperature (*CONDENSER REFRIG TEMP*) is within 3° F (1.7° C) of the entering condenser water temperature (*ENTERING CONDENSER WATER*).

Condenser Freeze Prevention — This control algorithm helps prevent condenser tube freeze-up by energizing the condenser pump relay. The PIC II controls the pump and, by starting it, helps to prevent the water in the condenser from freezing. The PIC II can perform this function whenever the chiller is not running *except* when it is either actively in pumpdown or in pumpdown/lockout with the freeze prevention disabled.

When the chiller is off and *CONDENSER REFRIG TEMP* is less than the *CONDENSER FREEZE POINT*, the *CONDENSER WATER PUMP* will be energized (Alert State 154, Potential Freeze Up) However, if the chiller is in pump down, and when it entered pump down mode, the *CONDENSING REFRIG TEMP* was more than 5° F (2.7° C) above the CONDENSER FREEZE POINT, the same low temperature condition will generate Alarm State 244 (Potential Freeze Up) and the CONDENSER WATER PUMP will be energized. In either case, the fault state will clear and the pump will turn off when the *CONDENSER REFRIG TEMP* is more than 5° F (2.7° C) above the *CONDENSER FREEZE POINT* and the entering condenser water temperature is greater than the *CONDENSER FREEZE POINT*. If the chiller is in Recycle Shutdown Mode when the condition occurs, the controls will transition to a non-recycle shutdown.

Evaporator Freeze Protection — When the *EVAPORATOR REFRIG TEMP* is less than the *EVAP REFRIG TRIPPOINT* plus the *REFRIG OVERRIDE DELTA T* (configurable from 2° to 5° F or 1.1° to 2.8° C), Alert State 122 will be displayed, and a capacity override will occur. (See Table 7.)

When the unit is running or in recycle, if the *EVAPORATOR REFRIG TEMP* is equal to or less than the *EVAP REFRIG TRIPPOINT* (33° F or 0.6° C for water, configurable for brine), Protective Limit Alarm State 232 will be displayed, the unit will shut down, and the CHILLED WATER PUMP will remain on. The alarm will be clearable when the leaving chilled water temperature rises 5° F (2.8° C) above the *CONTROL POINT*.

When the unit is off, if the *EVAPORATOR REFRIG TEMP* is less than the *EVAP REFRIG TRIPPOINT* plus 1° F (0.6° C), Alarm State 243 will be generated and the *CHILLED WATER PUMP* will be turned on. The alarm can be reset when the *EVAPORATOR REFRIG TEMP* rises 5° F (2.8° C) above the *EVAP REFRIG TRIPPOINT*.

Tower Fan Relay Low and High — Low condenser water temperature can cause the chiller to shut down when refrigerant temperature is low. The tower fan relays, located in the starter, are controlled by the PIC II to energize and deenergize as the pressure differential between cooler and condenser vessels changes. This prevents low condenser water temperature and maximizes chiller efficiency. The tower fan relay can only accomplish this if the relay has been added to the cooling tower temperature controller.

TOWER FAN RELAY LOW is turned on whenever the condenser water pump is running, and the difference between *EVAPORATOR PRESSURE* and *CONDENSER PRESSURE* is more than 30 psid (207 kPad) for *ENTERING CONDENSER WATER TEMPERATURE* greater than 65 F (18.3 C).

TOWER FAN RELAY LOW is turned off when the condenser pump is off or the *EVAP REFRIGERANT TEMP* is less than the *EVAP SAT OVERRIDE TEMP* for *ENTERING CONDENSER WATER TEMPERATURE* less than 62 F (16.7 C), or the difference between the *CONDENSER PRESSURE* and *EVAPORATOR PRESSURE* is less than 25 psid (172.4 kPad) and *ENTERING CONDENSER WATER TEMPERATURE* is less than 80 F (27 C).

TOWER FAN RELAY HIGH is turned on whenever the condenser water pump is running and the difference between *EVAPORATOR PRESSURE* and *CONDENSER PRESSURE* is more than 30 psid (206.8 kPad) and *ENTERING COND WATER* temperature is greater than the *TOWER FAN HIGH SETPOINT* (SETPOINT menu, default 75 F [23.9 C]).

The *TOWER FAN RELAY HIGH* is turned off when the *CONDENSER WATER PUMP* is off or the *EVAPORATOR REFRIG TEMP* is less than the *EVAP REF OVERRIDE TEMP* and *ENTERING CONDENSER WATER* is less than 70 F (21.1 C), or the difference between *EVAPORATOR PRESSURE and CONDENSER PRESSURE* is less than 28 Psid (193 kPa), and *ENTERING CONDENSER WATER* temperature is less than *TOWER FAN HIGH SETPOINT* minus 3 F (5.4 C).

IMPORTANT: A field-supplied water temperature control system for condenser water should be installed. The system should maintain the leaving condenser water temperature at a temperature that is at least 20° F (11° C) above the leaving chilled water temperature. While the tower fan relay outputs described above are not a substitute for a complete condenser water control system, they can serve as useful inputs to such a system.

Auto Restart After Power Failure — ICVC Software Version 11 — The Auto Restart feature is enabled/disabled in the OPTIONS screen.

NOTE: This section assumes that a chiller without Uninterruptible Power supply has been installed.

The following faults will reset when Auto Restart is enabled: single cycle dropout (if enabled), line current imbalance, high line voltage, low line voltage, and ISM power-on reset (Alerts 143-148). With this feature enabled, these faults are treated as alerts instead of alarms, so start-up proceeds as soon as the condition has been rectified. The 15-minute start-to-start and 1-minute start-inhibit timers are ignored during this type of start-up, and the STARTS IN 12 HOURS counter is not incremented.

This feature allows the controls to make an express restart as long as the controls have been without power for 20 minutes or less. If the power is off for less than 20 minutes, the timing of the restart is now in an express mode. When enabled, at the time of power up, if the chiller had been operating at the time of shutdown, the controls will immediately energize the CHILLED WATER PUMP output, wait 1 second, energize the CONDENSER WATER PUMP output, then wait 1 second to start to verify water flow. When flow is verified, and the chilled water temperature is calling for cooling, the guide vane is now checked for closure. If the unit is configured for VFD, then the guide vanes have no closure requirement. If there is no VFD configured, the vanes must be less than or equal to the GUIDE VANE CLOSURE limit set in the OPTIONS table.

After guide vanes are checked and in position, the oil pump is started and when the oil pressure is confirmed the controls wait 4 seconds to maintain pressure. At this point the compressor is commanded to start.

If the power had been off for longer than 20 minutes, the timing of the restart will be standard timing for auto restart after power failure. When power is restored (after the longer than 20-minute power failure) and if the compressor had been running, the oil pump will energize for one minute before energizing the cooler pump. AUTO RESTART will then continue like a normal start-up. If power to the ICVC module has been off for more than 3 hours or the time clock has been set for the first time, the compressor starts with the slowest temperature-based ramp load rate possible in order to minimize oil foaming. The oil pump is energized occasionally during the time the oil is being brought up to proper temperature in order to eliminate refrigerant that has migrated to the oil sump during the power failure. The pump turns on for 30 seconds at the end of every 30-minute period until the chiller is started.

Fast Power Source Transfers — When the electrical system is being prepared to transfer power from generator power back to utility power or vice-versa, and the power transfer is an open transition type, and time to transfer is less than 5 seconds, the chiller should be stopped before the transfer occurs and restarted after the transfer has been completed. If the chiller is not stopped before the transfer occurs, alarms on the chiller can occur that must be manually reset, such as a circuit breaker trip.

To accomplish shutdown and restart automatically, a set of dry contacts should be opened 30 to 60 seconds before the transfer occurs, then closed after the transfer is complete to restart the chiller. The contacts must be wired to the to the Remote START/STOP contact in the starter or VFD (See the field wiring diagrams) and the Remote Start contact configuration must be enabled.

If power transfers take 5 seconds or longer, the chiller Auto Restart after Power Failure feature (if enabled) will automatically restart the chiller.

Water/Brine Reset — For this application, it is recommended the Single Cycle Drop Out in the ISM Configuration be enabled. Chilled water capacity control is based on achieving and maintaining a *CONTROL POINT* temperature, which is the sum of the *LCW SET POINT* or *ECW SETPOINT* (from the SETPOINT screen) and a Water/Brine Reset value, if any. *CONTROL POINT* is limited to a minimum of 35 F (+1.7 C) for water, or 10 F (–12.2 C) for brine. Three types of chilled water or brine reset are available and can be viewed or modified on the TEMP_CTL screen, which is accessed from the EQUIPMENT SERVICE table.

The ICVC default screen indicates when the chilled water reset is active. *TEMPERATURE RESET* on the MAINSTAT screen indicates the amount of reset. The *CONTROL POINT* will be determined by adding the *TEMPERATURE RESET* to the SETPOINT.

To activate a reset type, access the TEMP_CTL screen and input all configuration information for that reset type. Then, input the reset type number (1, 2, or 3) in the *SELECT/ENABLE RESET TYPE* input line.

RESET TYPE 1: 4 to 20 mA (1 to 5 vdc) TEMPERATURE RESET – Reset Type 1 is an "automatic" reset utilizing a 4 to 20 mA or 1 to 5 vdc analog input signal provided from any external sensor, controller, or other device which is appropriately configured. Reset Type 1 permits up to ±30° F (±16.7° C) of reset to the chilled water set point. Inputs are wired to terminals J5-3 (–) and J5-4 (+) on the CCM (for 4 to 20 mA input). In order to utilize a 1 to 5 vdc input, a 25-ohm resistor must be wired in series with the + input lead (J5-4). For either input type, SW2 DIP switch 2 should be set in the ON (up) position. Inputs equivalent to less than 4 mA result in no reset, and inputs exceeding 20 mA are treated as 20 mA.

RESET TYPE 2: REMOTE TEMPERATURE RESET — Reset Type 2 is an automatic chilled water temperature reset based on a remote temperature sensor input signal. Reset Type 2 permits ± 30° F (± 16° C) of automatic reset to the set point based on a temperature sensor wired to the CCM module (see wiring diagrams or certified drawings). The temperature sensor must be wired to terminal J4-13 and J4-14. To configure Reset Type 2, enter the temperature of the remote sensor at the point where no temperature reset will occur (*REMOTE TEMP –> NO RESET*). Next, enter the temperature at which the full amount of reset will occur (*REMOTE TEMP –> FULL RESET*). Then, enter the maximum amount of reset required to operate the chiller (*DEGREES RESET*). Reset Type 2 can now be activated.

RESET TYPE 3 — Reset Type 3 is an automatic chilled water temperature reset based on cooler temperature difference. Reset Type 3 adds ± 30° F (± 16° C) based on the temperature difference between the entering and leaving chilled water temperature.

To configure Reset Type 3, enter the chilled water temperature difference (the difference between entering and leaving chilled water) at which no temperature reset occurs (*CHW DELTA T –> NO RESET*). This chilled water temperature difference is usually the full design load temperature difference. Next, enter the difference in chilled water temperature at which the full amount of reset occurs (*CHW DELTA T –> FULL RESET*). Finally, enter the amount of reset (*DEGREES RESET*). Reset Type 3 can now be activated.

Demand Limit Control Option — The demand limit control option (*20 mA DEMAND LIMIT OPT*) is externally controlled by a 4 to 20 mA or 1 to 5 vdc signal from an energy management system (EMS). The option is set up on the RAMP_DEM screen. When enabled, 4 mA is the 100% demand set point with an operator-configured minimum demand at a 20 mA set point (*DEMAND LIMIT AT 20 mA*).

The auto. demand limit is hardwired to terminals J5-1 (–) and J5-2 (+) on the CCM. Switch setting number 3 on SW2 will determine the type of input signal. With the switch set at the ON position the input is configured for an externally powered 4 to 20 mA signal. With the switch in the OFF position the input is configured for an external 1 to 5 vdc signal. In order to use a 1 to 5 vdc input instead of 4 to 20 mA, install a 25-ohm resistor in series with the + lead at terminal J5-2.

Surge Prevention — Constant Flow and Variable Primary Flow (VPF) — A surge condition occurs when the lift becomes so high that the gas flow across the impeller reverses. This condition can eventually cause chiller damage. The surge prevention algorithm notifies the operator that chiller operating conditions are marginal and to take action to help prevent chiller damage such as lowering entering condenser water temperature.

The surge prevention algorithm is an operator-configurable feature that can determine if lift conditions are too high for the compressor and then take corrective action. Lift is defined as the difference between the saturated temperature at the impeller eye and at the impeller discharge. The maximum lift a particular impeller wheel can perform varies with the gas flow across the impeller and the size of the wheel.

Variable Flow Surge prevention is the current standard for both constant and variable primary flow chilled water systems. Variable Primary Flow Surge Prevention does not require a measurement of *COOLER DELTA T* and is thus unaffected by changes in flow. With Variable Primary Flow Surge Prevention there is no difference in field configuration between constant and variable flow water systems.

The controls calculate the conditions at which the compressor will surge based on operating conditions and configured values entered into the OPTIONS screen.

The configurations as used by the controls would plot out on a graph as a curved or stepped line. If the present operating conditions plot at or above this line, surge prevention is turned on.

The way in which surge prevention functions will differ with the presence or absence of hot gas bypass and variable speed drive.

Hot Gas Bypass (Optional) Algorithm — If a hot gas bypass solenoid valve is present and the HGBP OPTION in the OPTIONS table is set to 1 or 2, this operator configurable feature can determine if load conditions are too low for the compressor and corrective action can be taken.

HGBP OPTION = 0 — The HGBP algorithm is disabled.

HGBP OPTION = 1 (VFD Option Disabled) — The algorithm determines if corrective action is necessary by checking the chiller operating point against an operator configured

threshold. The threshold is calculated from a combination of GUIDE VANE POSITION and the difference between CONDENSER PRESSURE and EVAPORATOR PRESSURE. The operator configured data points are the MINIMUM and MAXIMUM SATURATED TEMPERATURE DIFFERENCE (Surge/HGP Delta Tsmin and Surge/HGBP DeltaTsmax), the MAXIMUM AND MINIMUM GUIDE VANE POSITIONS (Surge/HGBP IGVmax and Surge/HGBP IGVmin) printed on a label fixed to the bottom of interior face of the control panel. A line is calculated between these points.

Whenever the *ACTUAL GUIDE VANE POSITION* is on the left side of the plotted line, the algorithm will energize the hot gas bypass valve to falsely load the compressor. If the *ACTUAL GUIDE VANE POSITION* falls to the right side of the plotted line by more than the *SURGE/HGBP DEADBAND,* the hot gas bypass valve is deenergized.

If the chiller is used for other than its original design conditions, instructions to adjust the Surge / Hot Gas Bypass configurations are found on page 78.

HGBP OPTION = 1 (VFD Option Enabled) — The HGBP is only energized if a *SURGE PROTECTION COUNT* is registered, the *ACTIVE DELTA T* falls below the *SURGE/HGBP DELTA T* or the *VFD LOAD FACTOR* approaches 1.0 and it is not possible to increase VFD speed. The VFD speed cannot increase when the *VFD TARGET SPEED* is equal to *VFD MAXIMUM SPEED* or if the V*FD TARGET SPEED* is FORCED to a fixed value.

HGBP OPTION = 2 — This option energizes the *HOT GAS BYPASS RELAY* solely based on the ACTIVE DELTA T (actual temperature difference between the *LEAVING CHILLED WATER* and *ENTERING CHILLED WATER*). Evaluation of the *ACTIVE DELTA T* begins at the completion of ramp loading. The hot gas bypass valve is energized if the *ACTIVE DELTA T* is less than the *HGBP ON DELTA T.* The hot gas bypass relay will be turned off when the *ACTIVE DELTA T* is greater than or equal to the sum of *HGBP ON DELTA T* plus *HGBP OFF DELTA T* See Fig. 27.

The *HGBP ON DELTA T* must be set to a value larger than the minimum delta T to which the chiller can unload.

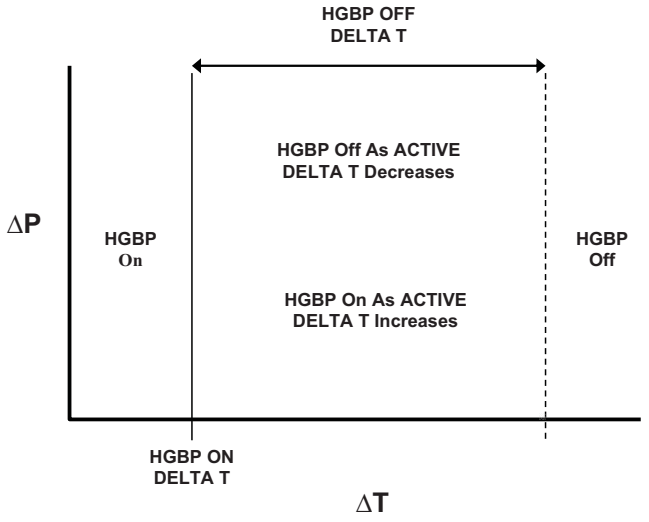

LEGEND

ECW — Entering Chilled Water
HGBP — Hot Gas Bypass
LCW — Leaving Chilled Water

ΔP = (Condenser Pressure) – (Cooler Pressure)
ΔT = (ECW) – (LCW)

Fig. 27 — 19XR Hot Gas Bypass/Surge Prevention (Option 2)

Surge Protection (Fixed Speed Chiller) — The PIC II monitors surge, which results in a fluctuation on the compressor motor amperage. Each time the fluctuation in amperage exceeds an operator-specified limit (SURGE DELTA % AMPS) plus a load correction factor, both SURGE COUNTS and SURGE PROTECTION COUNTS are incremented by one. If more than 4 SURGE PROTECTION COUNTS occur within an operator-specified time (SURGE TIME PERIOD), the PIC II declares an Excessive Compressor Surge Alarm (238) and the chiller is shut down. Both SURGE COUNTS and SURGE PROTECTION COUNTS are decreased by one if no surges occur within the SURGE TIME PERIOD.

If a surge occurs, the guide vane position will be reduced by 10%. The guide vanes will be prevented from increasing position until either the Surge Time Period expires causing the SURGE PROTECTION COUNT to return to zero or the Entering Condenser Water temperature decreases by 1 degree or the leaving condenser water temperature increases by 1 degree.

If the machine has a split ring diffuser a correction its position will be made simulatneously.

The threshold at which a current fluctuation is interpreted as a surge can be adjusted from the OPTIONS screen. Scroll to the SURGE DELTA % AMPS parameter and use the INCREASE or DECREASE softkey to adjust the surge threshold. The default setting is 10 %. The SURGE TIME PERIOD can be adjusted from the OPTIONS screen. Scroll to the SURGE TIME PERIOD parameter and use the INCREASE or DECREASE softkey to adjust the time duration. The default setting is 8 minutes.

SURGE PROTECTION COUNTS are displayed in the COMPRESS screen. Both SURGE PROTECTION COUNTS and SURGE COUNTS are displayed in the SURGPREV screen.

Surge Prevention Algorithm with VFD — This is an operator configurable feature that can determine if lift conditions are too high for the compressor and then take corrective action. Lift is defined as the difference between the saturated temperature at the impeller eye and at the impeller discharge. The maximum lift a particular impeller wheel can perform varies with the gas flow through the impeller and the diameter of the impeller. With a VFD the lift capability and the position of the surge line also vary with *ACTUAL VFD SPEED*.

The surge line constructed from the *SURGE/HGBP DELTA T* and *SURGE/HGBP DELTA P* points is based on full load conditions and 100% compressor speed. As *ACTUAL VFD SPEED* is reduced, the *SURGE/HGBP DELTA P* values are automatically reduced so that the surge line duplicates the compressor lift capability at the reduced speed. If the actual operating point (lift vs. load) goes above the surge prevention line then the controls enter *SURGE PREVENTION* mode.

Changing the *VFD SURGE LINE GAIN* adjusts the rate at which the surge line is adjusted in response to changes in *ACTUAL VFD SPEED*. Increasing *VFD SURGE LINE GAIN reduces* the size of the *SURGE PREVENTION* "on" area.

When the controls enter *SURGE PREVENTION* mode the first response is to increase *ACTUAL VFD SPEED* and increase the lift capability of the compressor while preventing the guide vanes from opening further. Should the compressor reach 100% *ACTUAL VFD SPEED* and still be in the surge prevention region, the controls will energize the HOT GAS BYPASS RELAY and if the *SURGE LIMIT/HGBP OPTION* is configured for Hot Gas Bypass).

If load decreases while the chiller is in *SURGE PREVENTION* mode the *ACTUAL GUIDE VANE POSITION* will close but the *ACTUAL VFD SPEED* will not decrease.

ACTIVE REGION as found on the SURGPREV screen is based on how far into the surge prevention area that the load

point has moved. This is used to determine the size of the speed boost to the VFD.

NOTE: If upon ramp-up, a chiller with VFD tends to go to full speed before guide vanes open fully, it is an indication that the lift at low load is excessive, and the operating point moved directly into the surge prevention region. In this case, investigate the ability of the condenser cooling means (e.g., cooling tower) to provide cooling water in accordance with the design load/entering condenser water temperature schedule.

A surge condition occurs when the lift becomes so high the gas flow across the impeller reverses. This condition can eventually cause chiller damage. When enabled, the Surge Prevention Algorithm will adjust either the inlet guide vane (IGV) position or compressor speed to maintain the compressor at a safe distance from surge while maintaining machine efficiency. If the surge condition degrades then the algorithm will move aggressively away from surge. This condition can be identified when the *SURGE/HGBP ACTIVE?* on the HEAT_EX display screen displays a YES.

When in Surge Prevention mode, with a command to increase capacity, the VFD speed will increase until maximum VFD speed is reached. At *VFD MAXIMUM SPEED*, when Capacity still needs to increase, the IGV's open. When in Surge Prevention mode and with a command to decrease capacity only the IGVs will close, the VFD speed will not decrease.

Surge Protection (VFD Chiller) — The PIC II monitors surge, which results in a fluctuation on the compressor motor amperage. Each time the fluctuation in amperage exceeds an operator-specified limit (SURGE DELTA % AMPS) plus a load correction factor, both SURGE COUNTS are incremented by one and the VFD will increase in speed provided that it is not already operating at VFD MAXIMUM SPEED or that the VFD TARGET SPEED is forced. If the VFD cannot increase in speed because the VFD is already at maximum speed of the target speed is forced then the SURGE PROTECTION COUNTS are also incremented by one. If more than 4 SURGE PROTECTION COUNTS occur within an operator-specified time (SURGE TIME PERIOD) and the ACTUAL VFD SPEED is greater than 90% then the PIC II declares an Excessive Compressor Surge Alarm (238) and the chiller is shut down. If more than four SURGE PROTECTION COUNTS occur within the SURGE TIME PERIOD and the ACTUAL VFD SPEED is less than 90% then the chiller is shut down on a Excessive Compressor Surge / Low Speed Alarm (236). Both SURGE COUNTS and SURGE PROTECTION COUNTS are decreased by one if no surges occur within the SURGE TIME PERIOD.

On chillers with VFDs, if a SURGE COUNT is registered and the ACTUAL VFD SPEED is less than the VFD MAXIMUM SPEED then the TARGET VFD SPEED will be increased by the amount configured in the VFD INCREASE STEP parameter. The VFD will not decrease in speed if SURGE COUNTS is greater than zero.

The threshold at which a current fluctuation is interpreted as a surge can be adjusted from the OPTIONS screen. The portion of the surge threshold attributable to current fluctuations can be changed by scrolling to the SURGE DELTA % AMPS parameter and adjusting it with the INCREASE or DECREASE softkeys. The default setting is 10 %. The SURGE TIME PERIOD can be adjusted from the OPTIONS screen. Scroll to the SURGE TIME PERIOD parameter and use the INCREASE or DECREASE softkey to adjust the surge count time interval. The default setting is 8 minutes.

SURGE PROTECTION COUNTS are displayed in the COMPRESS screen. Both SURGE PROTECTION COUNTS and SURGE COUNTS are displayed in the SURGPREV screen.

VFD Start-Up Speed Control — Immediately accelerating to a high VFD speed improves the ability of the compressor to compensate for some start-up environments that exceed condenser water design conditions. The 19XRV chillers initially accelerate to high VFD speed and then gradually slow the compressor, if possible, while adjusting the guide vane position until a stable operating point with improved chiller efficiency is attained.

Following a start command, the PIC II controls internally set the VFD TARGET SPEED to the smaller of the VFD MAXIMUM SPEED or the VFD START SPEED. Provided that the chiller has sufficient capacity, the VFD will continue to run at the startup speed during Ramp Loading until the chilled water temperature falls within the CHILLED WATER DEADBAND surrounding the Setpoint. RAMP LOADING ACTIVE in the SURGPREV screen will indicate YES during Ramp Loading. The GUIDE VANE DELTA will be equal to zero when the chilled water temperature is in the CHILLED WATER DEADBAND. The VFD speed will then be ramped down at one half of the VFD GAIN rate until, surge conditions are encountered, the VFD MINIMUM SPEED is reached, the ACTUAL GUIDE VANE POS reaches the GUIDE VANE TRAVEL LIMIT, or the TARGET VFD SPEED is forced. VFD RAMPDOWN ACTIVE in the SURGPREV screen will indicate YES during the rampdown process. The VFD speed will be regulated by standard capacity control and surge prevention algorithms at the conclusion of the rampdown process.

Head Pressure Reference Output (See Fig. 28) — The PIC II control outputs a 4 to 20 mA signal for the configurable Delta P (CONDENSER PRESSURE minus EVAPORATOR PRESSURE) reference curve shown in Fig. 28. An output is available on the ISM module [Terminal J8-3 (+), J8-4 (–) labeled spare]. The *DELTA P AT 100%* (chiller at maximum load condition default at 50 psi [344 kPa]), *DELTA P AT 0%* (chiller at minimum load condition default at 25 psi [172.4 kPa]) and *MINIMUM OUTPUT* points are configurable in the EQUIPMENT SERVICE-OPTIONS table. When configuring this output ensure that minimum requirements for oil pressure and proper condenser FLASC orifice performance are maintained.

The output may be useful as a reference signal to control a tower bypass valve, tower speed control, condenser pump speed control, etc. Note that it is up to the site design engineering agent to integrate this analog output with any external system device(s) to produce the desired effect. Carrier does not make any claim that this output is *directly* usable to control any specific piece of equipment (that is, without further control elements or signal conditioning), although it may be.

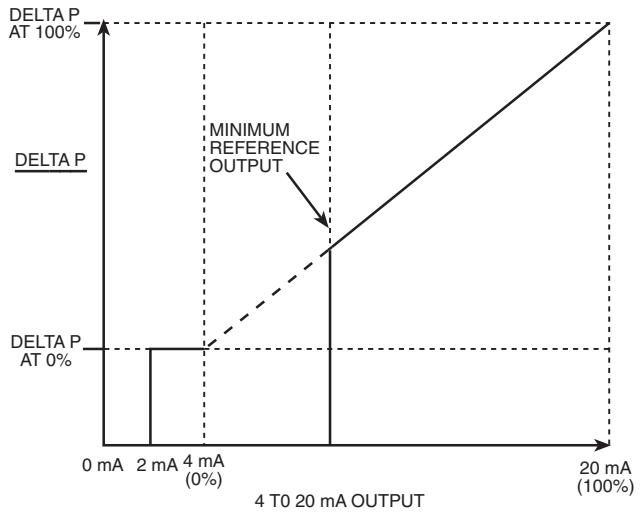

Fig. 28 — Head Pressure Reference Output (Minimum Set Above 4 mA)

The head pressure reference output will be on whenever the condenser pump is operating; it may also be manually operated in *CONTROLS TEST*. When the head pressure differential is less than the value entered for *DELTA P AT 0%,* the output will be maintained at 4 mA. The output is 2 mA when the chiller is not running.

Lead/Lag Control — The lead/lag control system automatically starts and stops a lag or second chiller in a 2-chiller water system. A third chiller can be added to the lead/lag system as a standby chiller to start up in case the lead or lag chiller in the system has shut down during an alarm condition and additional cooling is required. Refer to Fig. 20 and 21 for menu, table, and screen selection information.

NOTE: The lead/lag function can be configured on the LEADLAG screen, which is accessed from the SERVICE menu and EQUIPMENT SERVICE table. See Table 3, Example 22. Lead/lag status during chiller operation can be viewed on the LL_MAINT display screen, which is accessed from the SERVICE menu and CONTROL ALGORITHM STATUS table. See Table 3, Example 12.

Lead/Lag System Requirements:
- all chillers in the system must have software capable of performing the lead/lag function
- water pumps MUST be energized from the PIC II controls
- water flows should be constant
- the CCN time schedules for all chillers must be identical

Operation Features:
- 2 chiller lead/lag
- addition of a third chiller for backup
- manual rotation of lead chiller
- load balancing if configured
- staggered restart of the chillers after a power failure
- chillers may be piped in parallel or in series chilled water flow

COMMON POINT SENSOR USAGE AND INSTALLATION — Refer to 19XR,XRV Lead Lag Schematics, Appendix B. Lead/lag operation does not require a common point chilled water sensor. Common point sensors (Spare Temp#1 and #2) may be added as described below, if desired.

If using leaving chilled water control (*ECW CONTROL OPTION* is set to 0 [DSABLE] on the TEMP_CTL screen) and a common point sensor is desired *(COMMON SENSOR OPTION* in LEADLAG screen selected as 1) then the sensor is wired into the Spare Temp #1 position on the CCM (terminals J4-25 and J4-26).

If the entering chilled water control option is enabled (*ECW CONTROL OPTION* is selected to 1 [configured in the TEMP_CTL screen]) and a common point sensor is desired (*COMMON SENSOR OPTION* in LEADLAG screen selected as 1) then the sensor is wired in Spare Temp #2 position on the CCM (terminals J4-27 and J4-28).

NOTE: If the common point sensor option is chosen on a chilled water system, each chiller should have its own common point sensor installed. Each chiller uses its own common point sensor for control when that chiller is designated as the lead chiller. The PIC II cannot read the value of common point sensors installed on the other chillers in the chilled water system.

When installing chillers in series, either a common point sensor should be used (preferred), or the *LEAVING CHILLED WATER* sensor of the upstream chiller must be moved into the leaving chilled water pipe of the downstream chiller. In this application the *COMMON SENSOR OPTION* should only be enabled for the upstream chiller if that chiller is configured as the Lead.

If *ENTERING CHILLED WATER* control is required on chillers piped in series, either a common point sensor should be used (preferred), or the *ENTERING CHILLED WATER* sensor of the downstream chiller must be relocated to the *ENTERING CHILLED WATER* pipe of the upstream chiller. In this application the *COMMON SENSOR OPTION* should only be enabled for the downstream chiller if that chiller is configured as the Lead. Note that *ENTERING CHILLED WATER* control is not recommended for chillers installed in series due to potential control stability problems.

To properly control the *LEAVING CHILLED WATER TEMPERATURE* when chillers are piped in parallel, the water flow through the shutdown chiller(s) should be isolated so that no water bypass around the operating chiller occurs. However, if water bypass around the operating chiller is unavoidable, a common point sensor in the mixed *LEAVING CHILLED WATER* piping should be provided and enabled for the Lead chiller.

CHILLER COMMUNICATION WIRING — Refer to the chiller's Installation Instructions, Carrier Comfort Network® Interface section for information on chiller communication wiring.

LEAD/LAG OPERATION — The PIC II not only has the ability to operate 2 chillers in lead/lag, but it can also start a designated standby chiller when either the lead or lag chiller is faulted and capacity requirements are not met. The lead/lag option only operates when the chillers are in CCN mode. If any chiller configured for lead/lag is set to the LOCAL or OFF modes, it will be unavailable for lead/lag operation.

Lead/Lag Chiller Configuration and Operation
- A chiller is designated the lead chiller when its *LEADLAG: CONFIGURATION* value on the LEADLAG screen is set to "1."
- A chiller is designated the lag chiller when its *LEADLAG: CONFIGURATION* value is set to "2."
- A chiller is designated as a standby chiller when its *LEADLAG: CONFIGURATION* value is set to "3."
- A value of "0" disables the lead/lag designation of a chiller.This setting should also be used when "normal" operation without regard to lead/lag rules is desired (in LOCAL or CCN mode).

When configuring the LAG ADDRESS value on the LEADLAG screen of chiller "A" enter the address of the chiller on the system which will serve as lag when/if chiller "A" is configured as lead. For example, if the user is configuring chiller A, enter the address for chiller B as the lag address. If you are configuring chiller B, enter the address for chiller A as the lag address. This makes it easier to rotate the lead and lag chillers. Note that only the lag and standby chiller addresses specified in the configured lead chiller's table are relevant at a given time.

If the address assignments in the *LAG ADDRESS* and *STANDBY ADDRESS* parameters conflict, the lead/lag function is disabled and an alert (!) message displays. For example, if the *LAG ADDRESS* matches the lead chiller's address, the lead/lag will be disabled and an alert (!) message displayed. The lead/lag maintenance screen (LL_MAINT) displays the message 'INVALID CONFIG' in the *LEADLAG: CONFIGURATION* and *CURRENT MODE* fields. See Table below.

LEAD/LAG CONFIGURATION	INVALID CONDITIONS
1 (Lead)	Local Addres (Lead) = Lag Address
	Standby Chiller Option = Enable AND Local Address (Lead) = Standby Address
	Standby Chiller Option = Enable AND Local Address (Lag) = Standby Address
2 (Lag)	Local Addres (Lead) = Lag Address
	Standby Chiller Option = Enable AND Local Address (Lag) = Standby Address

The lead chiller responds to normal start/stop controls such as the occupancy schedule, a forced start or stop, and remote start contact inputs. After completing start-up and ramp loading, the PIC II evaluates the need for additional capacity. If additional capacity is needed, the PIC II initiates the start-up of the chiller configured at the *LAG ADDRESS*. If the lag chiller is faulted (in alarm) or is in the OFF or LOCAL modes, the chiller at the *STANDBY ADDRESS* (if configured) is requested to start. After the second chiller is started and is running, the lead chiller monitors conditions and evaluates whether the capacity has been reduced enough for the lead chiller to sustain the system alone. If the capacity is reduced enough for the lead chiller to sustain the *CONTROL POINT* temperatures alone, then the operating lag chiller is stopped.

If the lead chiller is stopped in CCN mode for any reason other than an alarm (*) condition, the lag and standby chillers are also stopped. If the configured lead chiller stops for an alarm condition, the configured lag chiller takes the lead chiller's place as the lead chiller, and the standby chiller serves as the lag chiller.

The PRESTART FAULT TIMER provides a timeout if there is a prestart alert condition that prevents a chiller from starting in a timely manner. If the configured lead chiller does not complete its start-up before the PRESTART FAULT TIMER (a user-configured value) elapses, then the lag chiller starts, and the lead chiller shuts down. The lead chiller then monitors the lag, acting as the lead, for a start request. The *PRESTART FAULT TIMER* parameter is on the LEADLAG screen, which is accessed from the EQUIPMENT SERVICE table of the SERVICE menu.

If the lag chiller does not achieve start-up before the *PRESTART FAULT TIMER* elapses, the lag chiller stops, and the standby chiller is requested to start, if configured and ready.

Standby Chiller Configuration and Operation — A chiller is designated as a standby chiller when its *LEADLAG: CONFIGURATION* value on the LEADLAG screen is set to "3." The standby chiller can operate as a replacement for the lag chiller only if one of the other two chillers is in an alarm (*) condition (as shown on the ICVC panel). If both lead and lag chillers are in an alarm (*) condition, the standby chiller defaults to operate in CCN mode, based on its configured occupancy schedule and remote contacts input.

Lag Chiller Start-Up Requirements — Before the lag chiller can be started, the following conditions must be met:

1. The lag chiller status indicates it is in CCN mode and is not in an alarm condition. If the current lag chiller is in an alarm condition, the standby chiller becomes the active lag chiller, if it is configured and available.
2. Lead chiller ramp loading must be complete.
3. The configured *LAG STOP TIMER* entry has elapsed. The *LAG STOP TIMER* starts when the lead chiller ramp loading is completed or when a lag chiller stops. The *LAG STOP TIMER* entry is on the LEADLAG screen.
4. Lead chiller *ACTIVE DEMAND LIMIT* (see the MAINSTAT screen) value must be greater than 95% of full load amps.
5. Lead chilled water temperature must be greater than the *CONTROL POINT* temperature (see the MAINSTAT screen) plus 1/2 the *CHILLED WATER DEADBAND* temperature (see the SETUP1 screen).

   NOTE: The chilled water temperature sensor may be the leaving chilled water sensor, the return water sensor, the common supply water sensor, or the common return water sensor, depending on which options are configured and enabled.
6. Lead chiller temperature pulldown rate (*TEMP PULLDOWN DEG/MIN* on the TEMP_CTL screen) of the chilled water temperature is less than 0.5° F (0.27° C) per minute for a cumulative duration greater than the PULLDOWN TIMER setting in the LEAD/LAG screen.

When all the above requirements have been met, the lag chiller is commanded to a STARTUP mode (indicated by "CONTRL" flashing next to the CHILLER START/STOP parameter in the MAINSTAT screen). The PIC II control then monitors the lag chiller for a successful start. If the lag chiller fails to start, the standby chiller, if configured, is started.

Lead/Lag Pulldown Timer Operation — Some lead/lag chiller applications with large chilled liquid loop volumes must accommodate intermittent slugs of warm ENTERING CHILLED WATER for short time periods. This type of transient condition can result when a control valve rapidly opens to allow flow through a previously isolated branch or zone within the chilled liquid system. A PULLDOWN TIMER can be configured to delay starting the lag chiller so it does not excessively cycle on and off for short time periods when intermittent slugs of warm ENTERING CHILLED WATER pass through the chillers. A larger PULLDOWN TIMER entry gives the warm slug of water more time to pass through the chillers before the lag chiller can start.

The chiller CONTROL POINT can be configured to either LEAVING CHILLED WATER or ENTERING CHILLED WATER temperature. The PIC controls monitor the temperature pulldown rate of the CHILLED WATER and display the result as CHILL WATER PULLDOWN/MIN in the HEAT_EX screen. Samples of the CHILLED WATER temperature are taken once every 10 seconds and compared against the previous CHILLED WATER sample. A positive value of CHILL WATER PULLDOWN/MIN indicates that the CHILLED WATER temperature is decreasing between successive samples. If CHILL WATER PULLDOWN/MIN rate is a minimum of 0.5 degrees F per minute then the PULLDOWN: SATISFIED parameter in the LL_MAINT screen displays YES, otherwise, the PULLDOWN: SATISFIED parameter displays NO.

If the lead chiller is unable to achieve the CONTROL POINT, the lag chiller will not start unless the lead chiller is unable to maintain a CHILL WATER PULLDOWN/MIN rate of 0.5 degrees F per minute for a time period equal to the number of minutes entered in the PULLDOWN TIMER parameter. PULLDOWN TIME in the LL_MAINT screen displays the remaining delay left before the lag chiller is allowed to start based on the pulldown timer. PULLDOWN TIME will count down starting at the value entered in PULLDOWN TIMER under the following conditions:

Ramp Loading is Complete

AND

PULLDOWN: SATISFIED = NO

The lag chiller pulldown start condition is met when PULLDOWN TIME lapses to 0.0 min.

If PULLDOWN: SATISFIED changes to YES as the PULLDOWN TIME is counting down to zero, the PULLDOWN TIME will start to count back up provided that the CHILLED WATER temperature has not fallen to less than the CONTROL POINT plus one half of the CHILLED WATER DEADBAND. The PULLDOWN TIME will start to count back down again should PULLDOWN: SATISFIED change back to NO. The PULLDOWN TIME will be immediately reset to the value entered in the PULLDOWN TIMER parameter if the CHILLED WATER temperature decreases to less than the CONTROL POINT plus one half of the CHILLED WATER DEADBAND.

Lag Chiller Shutdown Requirements — The following conditions must be met in order for the lag chiller to be stopped.

1. Lead chiller compressor motor average line current or load value (*MOTOR PERCENT KILOWATTS* on the MAINSTAT screen) is less than the lead chiller percent

capacity, which is defined as 115 – *LAG % CAPACITY*. The *LAG % CAPACITY* parameter is on the LEADLAG screen, which is accessed from the EQUIPMENT SERVICE table on the SERVICE menu.

2. The lead chiller chilled water temperature is less than the *CONTROL POINT* temperature (see the MAINSTAT screen) plus $^1/_2$ the *CHILLED WATER DEADBAND* temperature (see the SETUP1 screen).
3. The configured *LAG STOP TIMER* entry has elapsed. The *LAG STOP TIMER* starts when the lead chiller chilled water temperature is less than the chilled water CONTROL POINT plus 1/2 of the *CHILLED WATER DEADBAND* and the lead chiller compressor motor load (*MOTOR PERCENT KILOWATT* or *AVERAGE LINE CURRENT* on the MAINSTAT screen) is less than the lead chiller percent capacity.

NOTE: The use of AVERAGE LINE CURRENT or PERCENT MOTOR KILOWATTS in the Lag chiller shutdown decision is based on the DEMAND LIMIT SOURCE configuration in the RAMP_DEM screen. If DEMAND LIMIT SOURCE = 0 then AVERAGE LINE CURRENT will be used. If DEMAND LIMIT SOURCE = 1 then PERCENT MOTOR KILOWATTS will be used.

FAULTED CHILLER OPERATION — If the lead chiller shuts down because of an alarm (*) condition, it stops communicating to the lag and standby chillers. After 30 seconds, the lag chiller becomes the acting lead chiller and starts and stops the standby chiller, if necessary.

If the lag chiller goes into alarm when the lead chiller is also in alarm, the standby chiller reverts to a stand-alone CCN mode of operation.

If the lead chiller is in an alarm (*) condition (as shown on the ICVC panel), press the RESET softkey to clear the alarm. The chiller is placed in CCN mode. The lead chiller communicates and monitors the RUN STATUS of the lag and standby chillers. If both the lag and standby chillers are running, the lead chiller does not attempt to start and does not assume the role of lead chiller until either the lag or standby chiller shuts down. If only one chiller is running, the lead chiller waits for a start request from the operating chiller. When the configured lead chiller starts, it assumes its role as lead chiller.

If the lag chiller is the only chiller running when the lead chiller assumes its role as a lead chiller then the lag chiller will perform a *RECOVERY START REQUEST* (LL_MAINT screen). The lead chiller will start up when the following conditions are met.

1. Lag chiller ramp loading must be complete.
2. Lag *CHILLED WATER TEMP* (MAINSTAT screen) is greater than *CONTROL POINT* plus $^1/_2$ the *CHILLED WATER DEADBAND* temperature.
3. Lag chiller *ACTIVE DEMAND LIMIT* value must be greater than 95% of full load amps.
4. Lag chiller temperature pulldown rate (*TEMP PULLDOWN DEG/MIN*) of the chilled water temperature is less than 0.5 F (0.27 C) per minute.
5. The standby chiller is not running as a lag chiller.
6. The configured *LAG START TIMER* configured in the lag (acting lead) chiller has elapsed. The *LAG START TIMER* is started when the lag (acting lead) chiller's ramp loading is completed.

LOAD BALANCING — When the *LOAD BALANCE OPTION* (see LEADLAG screen) is enabled, the lead chiller sets the *ACTIVE DEMAND LIMIT* in the lag chiller to the lead chiller's compressor motor load value *MOTOR PERCENT KILOWATTS* or *AVERAGE LINE CURRENT* on the MAINSTAT screen). This value has limits of 40% to 100%. In addition, the *CONTROL POINT* for the lag chiller will be modified to a value of 3° F (1.67° C) less than the lead chiller's *CONTROL POINT* value. If the *LOAD BALANCE OPTION* is disabled, the *ACTIVE DEMAND LIMIT* and the *CONTROL POINT* are both forced to the same value as the lead chiller.

AUTO. RESTART AFTER POWER FAILURE — When an auto. restart condition occurs, each chiller may have a delay added to the start-up sequence, depending on its lead/lag configuration. The lead chiller does not have a delay. The lag chiller has a 45-second delay. The standby chiller has a 90-second delay. The delay time is added after the chiller water flow is verified. The PIC II ensures the guide vanes are closed. After the guide vane position is confirmed, the delay for lag and standby chillers occurs prior to energizing the oil pump. The normal start-up sequence then continues. The auto. restart delay sequence occurs whether the chiller is in CCN or LOCAL mode and is intended to stagger the compressor motor starts. Preventing the motors from starting simultaneously helps reduce the inrush demands on the building power system.

Ice Build Control — The selectable ice build mode permits use of the chiller to refreeze or control the temperature of an ice reservoir which may, for example, be used for thermal storage. This mode differs from water or brine chilling in that termination (indication that the need for cooling has been satisfied) is based on input(s) other than the temperature which is being controlled during operation.

NOTE: For ice build control to operate properly, the PIC II must be in CCN mode.

The PIC II can be configured for ice build operation.

- From the SERVICE menu, access the EQUIPMENT SERVICE table. From there, select the OPTIONS screen to enable or disable the *ICE BUILD OPTION*. See Table 3, Example 18.
- The *ICE BUILD SETPOINT* can be configured from the SETPOINT display, which is accessed from the PIC II main menu. See Table 3, Example 9.
- The ice build schedule can be viewed or modified from the SCHEDULE table. From this table, select the ice build schedule (OCCPC02S) screen. See Fig. 22 and the section on Time Schedule Operation, page 26, for more information on modifying chiller schedules.

The ice build time schedule defines the period(s) during which ice build is active if the ice build option is enabled. If the ice build time schedule overlaps other schedules, the ice build time schedule takes priority. During the ice build period, the *CONTROL POINT* is set to the *ICE BUILD SETPOINT* for temperature control. The *ICE BUILD RECYCLE* and *ICE BUILD TERMINATION* parameters, accessed from the OPTIONS screen, allow the chiller operator to recycle or terminate the ice build cycle. The ice build cycle can be configured to terminate when:

- the *ENTERING CHILLED WATER* temperature is less than the *ICE BUILD SETPOINT*. In this case, the operator sets the *ICE BUILD TERMINATION* parameter to 0 on the OPTIONS screen.
- the REMOTE CONTACT inputs from an ice level indicator are opened. In this case, the operator sets the *ICE BUILD TERMINATION* parameter to 1 on the OPTIONS screen.
- the chilled water temperature is less than the ice build set point and the remote contact inputs from an ice level indicator are open. In this case, the operator sets the *ICE BUILD TERMINATION* parameter to 2 on the OPTIONS screen.
- the end of the ice build time schedule (OCCP02S) has been reached.

ICE BUILD INITIATION — The ice build time schedule (OCCPC02S) is the means for activating the ice build option. The ice build option is enabled if:

- a day of the week and a time period on the ice build time schedule are enabled. The SCHEDULE screen shows an X in the day field and ON/OFF times are designated for the day(s),
- *and* the *ICE BUILD OPTION* is enabled.

The following events take place (unless overridden by a higher authority CCN device).

- *CHILLER START/STO*P is forced to START.
- The *CONTROL POINT* is forced to the *ICE BUILD SETPOINT*.
- Any force (Auto) is removed from the *ACTIVE DEMAND LIMIT*.

NOTE: A parameter's value can be forced, that is, the value can be manually changed at the ICVC by an operator, changed from another CCN device, or changed by other algorithms in the PIC II control system.

NOTE: The Ice Build steps do not occur if the chiller is configured and operating as a lag or standby chiller for lead/lag operation and is actively being controlled by a lead chiller. The lead chiller communicates the *ICE BUILD SET POINT*, the desired *CHILLER START/STOP* state, and the *ACTIVE DEMAND LIMIT* to the lag or standby chiller as required for ice build, if configured to do so.

START-UP/RECYCLE OPERATION — If the chiller is not running when ice build activates, the PIC II checks the following conditions, based on the *ICE BUILD TERMINATION* value, to avoid starting the compressor unnecessarily:

- if *ICE BUILD TERMINATION* is set to the TEMP option and the *ENTERING CHILLED WATER* temperature is less than or equal to the *ICE BUILD SETPOINT*;
- if *ICE BUILD TERMINATION* is set to the CONTACTS option and the remote contacts are open;
- if the *ICE BUILD TERMINATION* is set to the BOTH (temperature and contacts) option and the *ENTERING CHILLED WATER* temperature is less than or equal to the *ICE BUILD SETPOINT* and the remote contacts are open.

The *ICE BUILD RECYCLE* on the OPTIONS screen determines whether or not the chiller will go into an ice build RECYCLE mode.

- If the *ICE BUILD RECYCLE* is set to *DSABLE* (disable), the PIC II reverts to normal (non-ice build) temperature control when the ice build function is terminated by satisfying one of the above conditions. Once ice build is terminated in this manner, it will not be reinitiated until the next ice build schedule period begins.
- If the *ICE BUILD RECYCLE* is set to *ENABLE*, the PIC II goes into an *ICE BUILD RECYCLE* mode, and the chilled water pump relay remains energized to keep the chilled water flowing when the compressor shuts down. If the temperature of the *LEAVING CHILLED WATER* later increases above the *ICE BUILD SETPOINT* plus half the *RECYCLE RESTART DELTA T* value, the compressor restarts, controlling the chilled water/brine temperature to the *ICE BUILD SETPOINT*.

TEMPERATURE CONTROL DURING ICE BUILD — During ice build, the capacity control algorithm shall use the *CONTROL POINT* minus 5 F (–2.8 C) for control of the *LEAVING CHILLED WATER* temperature. The *ECW CONTROL OPTION* and any temperature reset option shall be ignored, if enabled, during ice build. Also, the following control options will be ignored during ice build operation:

- *ECW CONTROL OPTION* and any temperature reset options (configured on TEMP_CTL screen).
- *20 mA DEMAND LIMIT OPT* (configured on RAMP_DEM screen).

TERMINATION OF ICE BUILD — The ice build function terminates under the following conditions:

1. Time Schedule — When the current time on the ice build time schedule (OCCPC02S) is *not* set as an ice build time period.
2. Entering Chilled Water Temperature — Ice build operation terminates, based on temperature, if the *ICE BUILD TERMINATION* parameter is set to 0 (TEMP), the *ENTERING CHILLED WATER* temperature is less than the *ICE BUILD SETPOINT*, and the *ICE BUILD RECYCLE* is set to DSABLE. If the *ICE BUILD RECYCLE OPTION* is set to ENABLE, a recycle shutdown occurs and recycle start-up depends on the *LEAVING CHILLED WATER* temperature being greater than the water/brine *CONTROL POINT* plus the *RESTART DELTA T* temperature.
3. Remote Contacts/Ice Level Input — Ice build operation terminates when the *ICE BUILD TERMINATION* parameter is set to 1 (CONTACTS) and the ice build contacts are open and the *ICE BUILD RECYCLE* is set to DSABLE (0). In this case, the contacts provide ice level termination control. The contacts are used to stop the ice build function when a time period on the ice build schedule (OCCPC02S) *is* set for ice build operation. The remote contacts can still be opened and closed to start and stop the chiller when a specific time period on the ice build schedule is *not* set for ice build.
4. Entering Chilled Water Temperature and ICE BUILD Contacts — Compressor operation terminates when the *ICE BUILD TERMINATION* parameter is set to 2 (BOTH) and the conditions described above in items 2 and 3 for entering chilled water temperature and remote contacts have occurred.

NOTE: It is not possible to override the *CHILLER START/STOP, CONTROL POINT*, and *ACTIVE DEMAND LIMIT* variables from CCN devices (with a priority 4 or greater) during the ice build period. However, a CCN device can override these settings during 2-chiller lead/lag operation.

RETURN TO NON-ICE BUILD OPERATIONS — The ice build function forces the chiller to start, even if all other schedules indicate that the chiller should stop. When the ice build function terminates, the chiller returns to normal temperature control and start/stop schedule operation. The *CHILLER START/STOP* and *CONTROL POINT* return to normal operation. If the *CHILLER START/STOP* or *CONTROL POINT* has been forced (with a device of less than 4 priority) before the ice build function started, when the ice build function ends, the previous forces (of less than 4 priority) are not automatically restored.

Attach to Network Device Control — The Service menu includes the ATTACH TO NETWORK DEVICE screen. From this screen, the operator can:

- enter the time schedule number (if changed) for OCCPC03S, as defined in the NET_OPT screen
- attach the ICVC to any CCN device, if the chiller has been connected to a CCN network. This may include other PIC-controlled chillers.
- upgrade software

Figure 29 shows the ATTACH TO NETWORK DEVICE screen. The *LOCAL* parameter is always the ICVC module address of the chiller on which it is mounted. Whenever the controller identification of the ICVC changes, the change is reflected automatically in the BUS and ADDRESS columns for the local device. See Fig. 21. Default address for local device is BUS 0 ADDRESS 1.

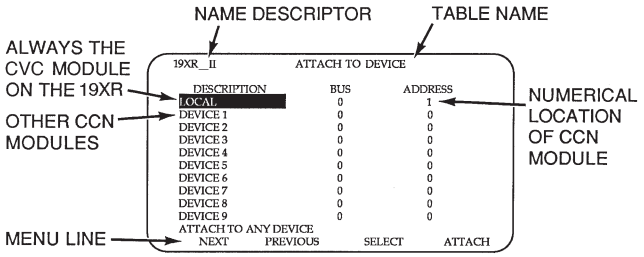

Fig. 29 — Example of Attach to Network Device Screen

When the ATTACH TO NETWORK DEVICE screen is accessed, information can not be read from the ICVC on any device (including the local chiller) until one of the devices listed on that screen is attached. The ICVC erases information about the module to which it was attached to make room for information on another device. Therefore, a CCN module must be attached when this screen is entered.

To attach any CCN device, highlight it using the SELECT softkey and press the ATTACH softkey. The message "UPLOADING TABLES, PLEASE WAIT" displays. The ICVC then uploads the highlighted device or module. If the module address cannot be found, the message "COMMUNICATION FAILURE" appears. The ICVC then reverts back to the ATTACH TO DEVICE screen. Try another device or check the address of the device that would not attach. The upload process time for each CCN module is different. In general, the uploading process takes 1 to 2 minutes. Before leaving the ATTACH TO NETWORK DEVICE screen, select the local device. Otherwise, the ICVC will be unable to display information on the local chiller.

ATTACHING TO OTHER CCN MODULES — If the chiller ICVC has been connected to a CCN network or other PIC controlled chillers through CCN wiring, the ICVC can be used to view or change parameters on the other controllers. Other PIC II chillers can be viewed and set points changed (if the other unit is in CCN control), if desired, from this particular ICVC module.

If the module number is not valid, the "COMMUNICATION FAILURE" message will show and a new address number must be entered or the wiring checked. If the module is communicating properly, the "UPLOAD IN PROGRESS" message will flash and the new module can now be viewed.

Whenever there is a question regarding which module on the ICVC is currently being shown, check the device name descriptor on the upper left hand corner of the ICVC screen. See Fig. 19.

When the CCN device has been viewed, the ATTACH TO NETWORK DEVICE table should be used to attach to the PIC that is on the chiller. Move to the ATTACH TO NETWORK DEVICE table (LOCAL should be highlighted) and press the ATTACH softkey to upload the LOCAL device. The ICVC for the 19XR chiller will be uploaded and default screen will display.

NOTE: The ICVC will not automatically reattach to the local module on the chiller. Press the ATTACH softkey to attach to the LOCAL device and view the chiller operation.

Service Operation — An overview of the tables and screens available for the SERVICE function is shown in Fig. 21.

TO ACCESS THE SERVICE SCREENS — When the SERVICE screens are accessed, a password must be entered.

1. From the main MENU screen, press the SERVICE softkey. The softkeys now correspond to the numerals 1, 2, 3, 4.
2. Press the four digits of the password, one at a time. An asterisk (*) appears as each digit is entered

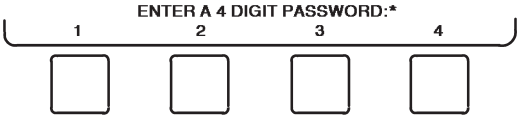

NOTE: The initial factory-set password is 1-1-1-1. If the password is incorrect, an error message is displayed

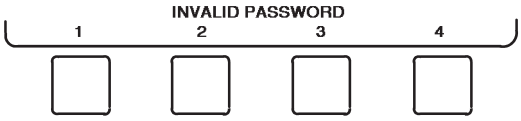

If this occurs, return to Step 1 and try to access the SERVICE screens again. If the password is correct, the softkey labels change to:

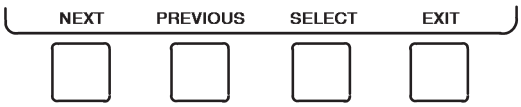

NOTE: The SERVICE screen password can be changed by entering the ICVC CONFIGURATION screen under SERVICE menu. The password is located at the bottom of the menu.

The ICVC screen displays the following list of available SERVICE screens:

- Alarm History
- Alert History
- Control Test
- Control Algorithm Status
- Equipment Configuration
- ISM (Starter) Config Data
- Equipment Service
- Time and Date
- Attach to Network Device
- Log Out of Device
- ICVC Configuration

See Fig. 21 for additional screens and tables available from the SERVICE screens listed above. Use the EXIT softkey to return to the main MENU screen.

NOTE: To prevent unauthorized persons from accessing the ICVC service screens, the ICVC automatically signs off and password-protects itself if a key has not been pressed for 15 minutes. The sequence is as follows. Fifteen minutes after the last key is pressed, the default screen displays, the ICVC screen light goes out (analogous to a screen saver), and the ICVC logs out of the password-protected SERVICE menu. Other screen and menus, such as the STATUS screen can be accessed without the password by pressing the appropriate softkey.

TO LOG OUT OF NETWORK DEVICE — To access this screen and log out of a network device, from the default ICVC screen, press the MENU and SERVICE softkeys. Enter the password and, from the SERVICE menu, highlight LOG OUT OF NETWORK DEVICE and press the SELECT softkey. The ICVC default screen will now be displayed.

TIME BROADCAST ENABLE — The first displayed line, "Time Broadcast Enable," in the SERVICE/EQUIPMENT CONFIGURATION/BRODEF screen, is used to designate the local chiller as the sole time broadcaster on a CCN network (there may only be one). If there is no CCN network present and/or there is no designated time broadcaster on the network, current time and date, Daylight Saving Time (DST), and holi-

days as configured in the local chiller's control will be applied. If a network is present and one time broadcaster on the network has been enabled, current time and date, DST, and holiday schedules as configured in the controls of the designated time broadcaster will be applied to all CCN devices (including chillers) on the network.

HOLIDAY SCHEDULING (Fig. 30) — Up to 18 different holidays can be defined for special schedule consideration. There are two different screens to be configured. First, in the SERVICE / EQUIPMENT CONFIGURATION / HOLIDAYS screen, select the first unused holiday entry (HOLDY01S, for example). As shown in Fig. 30, enter a number for Start Month (1 = January, 2 = February, …, 12 = December), a number for Start Day (1 - 31), and Duration in days (0 - 99). By default there are no holidays set up. Second, in the occupancy Schedule tables, specify and enable (by setting "X" under the "H" column) run time period(s) which will apply to all holidays. (Refer to Fig. 20.) A run time period which is enabled for holidays may be applied to one or more non-holiday days of the week as well. This may be done for the local (table OCCPC01S), Ice Build (OCCPC02S), and/or CCN (OCCPC03S) schedule(s). If the chiller is on a CCN network, the active holiday definition will be that configured in the device designated at the sole time broadcaster (if one is so enabled). See the TIME BROADCAST ENABLE section.

The broadcast function must be activated for the holidays configured on the HOLIDEF screen to work properly. Access the BRODEF screen from the EQUIPMENT CONFIGURATION table and select ENABLE to activate function. Note that when the chiller is connected to a CCN Network, only one chiller or CCN device can be configured as the broadcast device. The controller that is configured as the broadcaster is the device responsible for transmitting holiday, time, and daylight-savings dates throughout the network.

To access the BRODEF screen, see the SERVICE menu structure, Fig. 21.

To view or change the holiday periods for up to 18 different holidays, perform the following operation:

1. At the Menu screen, press SERVICE to access the Service menu.
2. If not logged on, follow the instructions for Attach to Network Device or To Log Out. Once logged on, press NEXT until Equipment Configuration is highlighted.
3. Once Equipment Configuration is highlighted, press SELECT to access.
4. Press NEXT until HOLIDAYS is highlighted. This is the Holiday Definition table.
5. Press SELECT to enter the Data Table Select screen. This screen lists 18 holiday tables.
6. Press NEXT to highlight the holiday table that is to be viewed or changed. Each table is one holiday period, starting on a specific date, and lasting up to 99 days.
7. Press SELECT to access the holiday table. The Configuration Select table now shows the holiday start month and day, and how many days the holiday period will last.
8. Press NEXT or PREVIOUS to highlight the month, day, or duration.

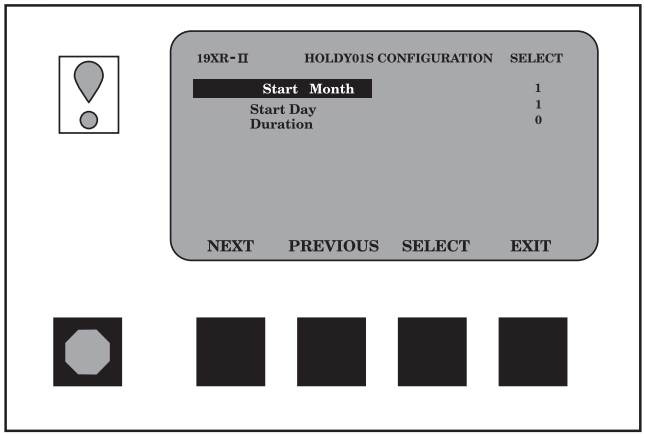

Fig. 30 — Example of Holiday Period Screen

9. Press SELECT to modify the month, day, or duration.
10. Press INCREASE or DECREASE to change the selected value.
11. Press ENTER to save the changes.
12. Press EXIT to return to the previous menu.

DAYLIGHT SAVING TIME CONFIGURATION — The BRODEF table also defines Daylight Saving Time changes. This feature is by default enabled, and the settings should be reviewed and adjusted if desired. The following line-item entries are configurable for both Daylight Savings Time "Start" and "Stop," and they are defined in Table 8.

To disable the Daylight Savings Time function simply enter 0 minutes for "Start Advance" and "Stop Back."

Table 8 — Daylight Saving Time Values

ITEM	DEFINITION
Month	1 = January, 2 = February, …, 12 = December.
Day of Week	1 = Monday,…, 7 = Sunday
Week	1 = first occurrence of selected Day of Week in the selected month, 2 = second occurrence of the selected Day, etc. This is not necessarily what one would conclude from looking at a standard calendar. For example, April 7, 2011, is Day 4 Week 1, but April 8, 2011, is Day 5 Week 2.
Time	Time of day in 24-hour format when the time advance or set back will occur.
Advance/Back	"Advance" occurs first in the year, setting the time ahead by the specified number of minutes on the selected date. "Back" sets the time back by the specified amount (later in the year).

START-UP/SHUTDOWN/ RECYCLE SEQUENCE (Fig. 31)

Local Start-Up — The timing of a normal start-up will change when auto-restart after power failure is enabled and the unit has been without power less than 20 minutes. See the Auto Restart After Power Failure section. Local start-up (or a manual start-up) is initiated by pressing the LOCAL menu softkey on the default ICVC screen. Local start-up can proceed when the chiller schedule indicates that the CURRENT TIME and CURRENT DATE have been established as a run time and date, and after the internal 15-minute start-to-start and the 1-minute stop-to-start inhibit timers have expired. These timers

are represented in the *START INHIBIT TIMER* and can be viewed on the MAINSTAT screen and DEFAULT screen. The timer must expire before the chiller will start. If the timers have not expired the *RUN STATUS* parameter on the MAINSTAT screen now reads TIMEOUT.

NOTE: The time schedule is said to be "occupied" if the *OCCUPIED ?* parameter on the MAINSTAT screen is set to YES. For more information on occupancy schedules, see the sections on Time Schedule Operation (page 26), Occupancy Schedule (page 46), and To Prevent Accidental Start-Up (page 85), and Fig. 22.

If the *OCCUPIED ?* parameter on the MAINSTAT screen is set to NO, the chiller can be forced to start as follows. From the default ICVC screen, press the MENU and STATUS softkeys. Scroll to highlight MAINSTAT. Press the SELECT softkey. Scroll to highlight *CHILLER START/STOP.* Press the START softkey to override the schedule and start the chiller.

NOTE: The chiller will continue to run until this forced start is released, regardless of the programmed schedule. To release the forced start, highlight *CHILLER START/STOP* from the MAINSTAT screen and press the RELEASE softkey. This action returns the chiller to the start and stop times established by the schedule.

The chiller may also be started by overriding the time schedule. From the default screen, press the MENU and SCHEDULE softkeys. Scroll down and select the current schedule. Select OVERRIDE, and set the desired override time.

Another condition for start-up must be met for chillers that have the *REMOTE CONTACTS OPTION* on the EQUIPMENT SERVICE screen set to ENABLE. For these chillers, the *REMOTE START CONTACT* parameter on the MAINSTAT screen must be CLOSED. From the ICVC default screen, press the MENU and STATUS softkeys. Scroll to highlight MAINSTAT and press the SELECT softkey. Scroll down the MAINSTAT screen to highlight *REMOTE START CONTACT* and press the SELECT softkey. Then, press the CLOSE softkey. To end the override, select *REMOTE CONTACTS INPUT* and press the RELEASE softkey.

Once local start-up begins, the PIC II performs a series of pre-start tests to verify that all pre-start alerts and safeties are within the limits shown in Table 9. The *RUN STATUS* parameter on the MAINSTAT screen line now reads PRESTART. If a test is not successful, the start-up is delayed or aborted. If the tests are successful, the chilled water/brine pump relay energizes, and the MAINSTAT screen line now reads STARTUP.

Five seconds later, the condenser pump relay energizes. Thirty seconds later the PIC II monitors the chilled water and condenser water flow devices and waits until the *WATER FLOW VERIFY TIME* (operator-configured, default 5 minutes) expires to confirm flow. After flow is verified, the chilled water temperature is compared to *CONTROL POINT* plus $^1/_2$ *CHILLED WATER DEADBAND*. If the temperature is less than or equal to this value, the PIC II turns off the condenser pump relay and goes into a RECYCLE mode.

NOTE: The 19XR units equipped with ICVC are not available with factory-installed chilled water or condenser water flow devices (available as an accessory for use with the CCM control board). In place of the cooler and condenser water pressure inputs on the CCM is a 4300-ohm resistor and a jumper lead.

If the water/brine temperature is high enough, the start-up sequence continues and checks the guide vane position. If the guide vanes are more than 4% open, the start-up waits until the PIC II closes the vanes. If the vanes are closed and the oil pump pressure is less than 4 psi (27.6 kPa), the oil pump relay energizes. The PIC II then waits until the oil pressure (*OIL PRESS VERIFY TIME*, operator-configured, default of 40 seconds) reaches a maximum of 18 psi (124 kPa). After oil pressure is verified, the PIC II waits 40 seconds, and the compressor start relay (1CR) energizes to start the compressor.

Compressor ontime and service ontime timers start, and the compressor *STARTS IN 12 HOURS* counter and the number of starts over a 12-hour period counter advance by one.

Failure to verify any of the requirements up to this point will result in the PIC II aborting the start and displaying the applicable pre-start alert mode of failure on the ICVC default screen. A pre-start failure does not advance the *STARTS IN 12 HOURS* counter. Any failure after the 1CR relay has energized results in a safety shutdown, advances the starts in 12 hours counter by one, and displays the applicable shutdown status on the ICVC display.

The minimum time to complete the entire prestart sequence is approximately 185 seconds.

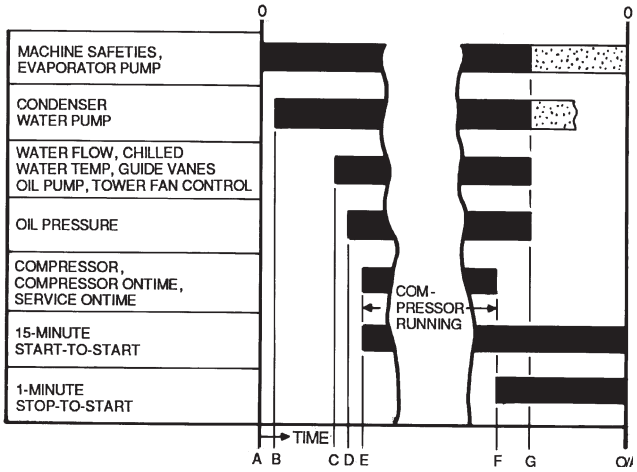

A — START INITIATED: Pre-start checks are made; evaporator pump started.*

B — Condenser water pump started (5 seconds after A).

C — Water flows verified (30 seconds to 5 minutes maximum after B). Chilled water temperatures checked against control point. Guide vanes checked for closure. Oil pump started; tower fan control enabled.

D — Oil pressure verified (15 seconds minimum, 300 seconds maximum after C).

E — Compressor motor starts; compressor ontime and service ontime start, 15-minute inhibit timer starts (10 seconds after D), total compressor starts advances by one, and the number of starts over a 12-hour period advances by one.

F — SHUTDOWN INITIATED — Compressor motor stops; compressor ontime and service ontime stop, and 1-minute inhibit timer starts.

G — Oil pump and evaporator pumps deenergized (60 seconds after F). Condenser pump and tower fan control may continue to operate if condenser pressure is high. Evaporator pump may continue if in RECYCLE mode.

O/A — Restart permitted (both inhibit timers expired: minimum of 15 minutes after E; minimum of 1 minute after F).

* Auto Restart After Power Failure Timing sequence will be faster.

Fig. 31 — Control Timing Sequence (for Normal Start-Up)

Table 9 — Prestart Checks

QUANTITY CHECKED	REQUIREMENT	ALERT STATE IF FALSE
STARTS IN 12 HOURS	< 8 (not counting recycle restarts or auto restarts after power failure) ALERT is cleared once RESET is pressed.	100
COMP THRUST BRG TEMP	< [COMP THRUST BRG ALERT] –10° F (5.6° C)	101
COMP MOTOR WINDING TEMP	< [COMP MOTOR TEMP OVERRIDE] –10° F (5.6° C)	102
COMP DISCHARGE TEMP	< [COMP DISCHARGE ALERT] –10° F (5.6° C)	103
EVAP REFRIG LIQUID TEMP	< [EVAP REFRIG TRIPPOINT] + [REFRIG OVERRIDE DELTA T]	104
OIL SUMP TEMP	< 150° F (65.5° C) or <[EVAPORATOR REFRIG TEMP] + 50° F (27.8° C)	105
CONDENSER PRESSURE	< [COND PRESS OVERRIDE] –20 PSI (138 kPa) and < 145 psi (1000 kPa)	106
PERCENT LINE VOLTAGE	< [Undervoltage Threshold]	107
PERCENT LINE VOLTAGE	> [Overvoltage Threshold]	108
ACTUAL GUIDE VANE POS	Controls test guide vane calibration must be performed	109

Shutdown Sequence — Chiller shutdown begins if any of the following occurs:

- the STOP button is pressed continuously for at least one second (the alarm light blinks once to confirm the stop command)
- a recycle condition is present (see Chilled Water Recycle Mode section)
- the time schedule has gone into unoccupied mode
- the chiller protective limit has been reached and chiller is in alarm
- the start/stop status is overridden to stop from the CCN network or the ICVC

When a stop signal occurs, the shutdown sequence first stops the compressor by deactivating the start relay (1CR). A status message of "SHUTDOWN IN PROGRESS, COMPRESSOR DEENERGIZED" is displayed, and the compressor ontime and service ontime stop. The guide vanes are then brought to the closed position. The oil pump relay and the chilled water/brine pump relay shut down 60 seconds after the compressor stops. The condenser water pump shuts down at the same time if the *ENTERING CONDENSER WATER* temperature is greater than or equal to 115 F (46.1 C) and the *CONDENSER REFRIG TEMP* is greater than the *CONDENSER FREEZE POINT* plus 5 F (–15.0 C). The stop-to-start timer now begins to count down. If the start-to-start timer value is still greater than the value of the start-to-stop timer, then this time displays on the ICVC.

Certain conditions that occur during shutdown can change this sequence.

- If the AVERAGE LINE CURRENT is greater than 5% after shutdown, or the starter contacts remain energized, the oil pump and chilled water pump remain energized, the SHUNT TRIP relay is energized, and the alarm is displayed.
- The condenser pump shuts down when the *CONDENSER PRESSURE* is less than the *COND PRESS OVERRIDE* threshold minus 3.5 psi (24.1 kPa) and the *CONDENSER REFRIG TEMP* is less than or equal to the *ENTERING CONDENSER WATER* temperature plus 3° F (–1.6° C).
- If the chiller shuts down due to low refrigerant temperature, the chilled water pump continues to run until the *LEAVING CHILLED WATER* temperature is greater than the *CONTROL POINT* temperature, plus 5° F (3° C).

Automatic Soft Stop Amps Threshold — The soft stop amps threshold feature closes the guide vanes of the compressor automatically if a non-recycle, non-alarm stop signal occurs before the compressor motor is deenergized.

Any time the compressor is directed to STOP (except in the cases of a fault or recycle shutdown), the guide vanes are directed to close, and the compressor shuts off when any of the following is true:

- AVERAGE LINE CURRENT (%) drops below the SOFT STOP AMPS THRESHOLD
- ACTUAL GUIDE VANE POSITION drops below 4%
- 4 minutes have elapsed
- the STOP button is pressed twice

If the chiller enters an alarm state or if the compressor enters a RECYCLE mode, the compressor deenergizes immediately.

To activate the soft stop amps threshold feature, scroll to the bottom of OPTIONS screen on the ICVC. Use the INCREASE or DECREASE softkey to set the *SOFT STOP AMPS THRESHOLD* parameter to the percent of amps at which the motor will shut down. The default setting is 100% amps (no soft stop). The range is 40 to 100%.

When the soft stop amps threshold feature is being applied, a status message, "SHUTDOWN IN PROGRESS, COMPRESSOR UNLOADING" displays on the ICVC.

The soft stop amps threshold function can be terminated and the compressor motor deenergized immediately by depressing the STOP button twice.

Chilled Water Recycle Mode — The chiller may cycle off and wait until the load increases to restart when the compressor is running in a lightly loaded condition. This cycling is normal and is known as "recycle." A recycle shutdown is initiated when any of the following conditions are true:

- *LEAVING CHILLED WATER* temperature (or *ENTERING CHILLED WATER* temperature, if the *ECW CONTROL OPTION* is enabled) is more than 5° F (2.8° C) below the *CONTROL POINT.*
- *LEAVING CHILLED WATER* temperature (or *ENTERING CHILLED WATER* temperature, if the *ECW CONTROL OPTION* is enabled) is below the *CONTROL POINT*, and the chilled water temperature difference is less than the *(RECYCLE CONTROL) SHUTDOWN DELTA T* (configured in the EQUIPMENT SERVICE/SETUP1 table).
- the *LEAVING CHILLED WATER* temperature is within 3° F (1.7° C) of the *EVAP REFRIG TRIPPOINT.*

NOTE: Recycle shutdown will not occur if the CONTROL POINT has been modified (e.g., by a chilled water reset input) within the previous 5 minutes of operation. Also, chilled water recycle logic does not apply to Ice Build operation.

When the chiller is in RECYCLE mode, the chilled water pump relay remains energized so the chilled water temperature can be monitored for increasing load. The recycle control uses *RESTART DELTA T* to check when the compressor should be restarted. This is an operator-configured function which defaults to 5° F (3° C). This value can be viewed or modified on

the SETUP1 table. The compressor will restart when the chiller is:

- in LCW CONTROL and the *LEAVING CHILLED WATER* temperature is greater than the *CONTROL POINT* plus the *RECYCLE RESTART DELTA T.*
- in *ECW CONTROL* and the *ENTERING CHILLED WATER* temperature is greater than the *CONTROL POINT* plus the *RECYCLE RESTART DELTA T.*

Once these conditions are met, the compressor initiates a start-up with a normal start-up sequence.

An alert condition may be generated if 5 or more recycle start-ups occur in less than 4 hours. Excessive recycling can reduce chiller life; therefore, compressor recycling due to extremely low loads should be reduced.

To reduce compressor recycling, use the time schedule to shut the chiller down during known low load operation period, or increase the chiller load by running the fan systems. If the hot gas bypass is installed, adjust the values to ensure that hot gas is energized during light load conditions. Increase the *RECYCLE RESTART DELTA T* on the SETUP1 table to lengthen the time between restarts.

The chiller should not be operated below design minimum load without a hot gas bypass installed.

Safety Shutdown — A safety shutdown is identical to a manual shutdown with the exception that, during a safety shutdown, the ICVC displays the reason for the shutdown, the alarm light blinks continuously, and the spare alarm contacts are energized.

After a safety shutdown, the RESET softkey must be pressed to clear the alarm. If the alarm condition is still present, the alarm light continues to blink. Once the alarm is cleared, the operator must press the CCN or LOCAL softkeys to restart the chiller.

BEFORE INITIAL START-UP

Job Data Required

- list of applicable design temperatures and pressures (product data submittal)
- chiller certified prints
- starting equipment details and wiring diagrams
- diagrams and instructions for special controls or options
- 19XR Installation Instructions

Equipment Required

- mechanic's tools (refrigeration)
- digital volt-ohmmeter (DVM)
- true RMS digital multimeter with clamp-on current probe or true RMS digital clamp-on ammeter for at least 480 vac or 700 vdc (19XRV only).
- electronic leak detector
- absolute pressure manometer or wet-bulb vacuum indicator (see Fig. 32)
- 500-v insulation tester (megohmmeter) for compressor motors with nameplate voltage of 600 v or less, or a 5000-v insulation tester for compressor motor rated above 600 v

Using the Optional Storage Tank and Pumpout System — Refer to Positive Pressure Chillers with Storage Tanks section, page 89 for pumpout system preparation, refrigerant transfer, and chiller evacuation.

Remove Shipping Packaging — Remove any packaging material from the control center, power panel, guide vane actuator, motor cooling and oil reclaim solenoids, motor and bearing temperature sensor covers, and the factory-mounted starter.

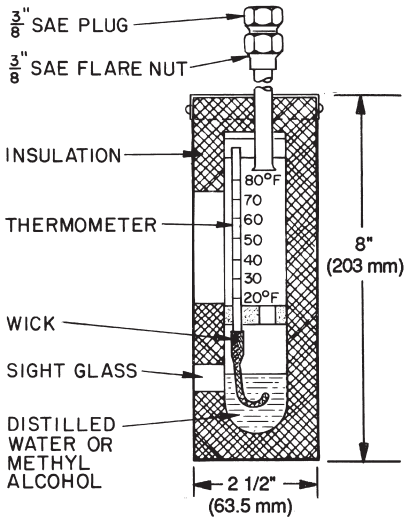

Fig. 32 — Typical Wet-Bulb Type Vacuum Indicator

Open Oil Circuit Valves — Check to ensure the oil filter isolation valves (Fig. 6 and 7) are open by removing the valve cap and checking the valve stem.

Tighten All Gasketed Joints and Guide Vane Shaft Packing — Gaskets and packing normally relax by the time the chiller arrives at the jobsite. Tighten all gasketed joints and the guide vane shaft packing to ensure a leak-tight chiller. Gasketed joints (excluding O-rings) may include joints at some or all of the following:

- Waterbox covers
- Compressor suction elbow flanges (at compressor and at the cooler)
- Compressor discharge flange
- Compressor discharge line spacer (both sides) if no isolation valve
- Cooler inlet line spacer (both sides) if no isolation valve
- Hot gas bypass valve (both sides of valve)
- Hot gas bypass flange at compressor

Refer to Table 10 for bolt torque requirements.

Check Chiller Tightness — Figure 33 outlines the proper sequence and procedures for leak testing.

The 19XR chillers are shipped with the refrigerant contained in the condenser shell and the oil charge in the compressor. The cooler is shipped with a 15 psig (103 kPa) refrigerant charge. Units may be ordered with the refrigerant shipped separately, along with a 15 psig (103 kPa) nitrogen-holding charge in each vessel.

To determine if there are any leaks, the chiller should be charged with refrigerant. Use an electronic leak detector to check all flanges and solder joints after the chiller is pressurized. If any leaks are detected, follow the leak test procedure.

If the chiller is spring isolated, keep all springs blocked in both directions to prevent possible piping stress and damage during the transfer of refrigerant from vessel to vessel during the leak test process, or any time refrigerant is being transferred. Adjust the springs when the refrigerant is in operating condition and the water circuits are full.

Refrigerant Tracer — Carrier recommends the use of an environmentally acceptable refrigerant tracer for leak testing with an electronic detector.

Ultrasonic leak detectors can also be used if the chiller is under pressure.

Table 10 — Bolt Torque Requirements, Foot Pounds

BOLT SIZE (in.)	SAE 2, A307 GR A HEX HEAD NO MARKS LOW CARBON STEEL		SAE 5, SA449 SOCKET HEAD OR HEX WITH 3 RADIAL LINES MEDIUM CARBON STEEL		SAE 8, SA354 GR BD HEX HEAD WITH 6 RADIAL LINES MEDIUM CARBON STEEL	
	Minimum	Maximum	Minimum	Maximum	Minimum	Maximum
1/4	4	6	6	9	9	13
5/16	8	11	13	18	20	28
3/8	13	19	22	31	32	46
7/16	21	30	35	50	53	75
1/2	32	45	53	75	80	115
9/16	46	65	75	110	115	165
5/8	65	95	105	150	160	225
3/4	105	150	175	250	260	370
7/8	140	200	265	380	415	590
1	210	300	410	580	625	893
1 1/8	330	475	545	780	985	1,410
1 1/4	460	660	770	1,100	1,380	1,960
1 3/8	620	885	1,020	1,460	1,840	2,630
1 1/2	740	1060	1,220	1,750	2,200	3,150
1 5/8	1010	1450	1,670	2,390	3,020	4,310
1 3/4	1320	1890	2,180	3,110	3,930	5,610
1 7/8	1630	2340	2,930	4,190	5,280	7,550
2	1900	2720	3,150	4,500	5,670	8,100
2 1/4	2180	3120	4,550	6,500	8,200	11,710
2 1/2	3070	4380	5,000	7,140	11,350	16,210
2 3/4	5120	7320	8,460	12,090	15,710	22,440
3	6620	9460	11,040	15,770	19,900	28,440

⚠ WARNING

Do not use air or oxygen as a means of pressurizing the chiller. Mixtures of HFC-134a and air can undergo combustion.

Leak Test Chiller — Due to regulations regarding refrigerant emissions and the difficulties associated with separating contaminants from the refrigerant, Carrier recommends the following leak test procedure. Refer to Tables 11A and 11B for refrigerant pressure/temperature values.

1. If the pressure readings are normal for the chiller condition:
   a. Evacuate the holding charge from the vessels, if present.
   b. Raise the chiller pressure, if necessary, by adding refrigerant until pressure is at the equivalent saturated pressure for the surrounding temperature. Follow pumpout procedures in the Transfer Refrigerant from Pumpout Storage Tank to Chiller section, Steps 1a-e, page 90.

⚠ WARNING

Never charge liquid refrigerant into the chiller if the pressure in the chiller is less than 35 psig (241 kPa) for HFC-134a. Charge as a gas only, with the cooler and condenser pumps running, until this pressure is reached, using PUMPDOWN LOCKOUT and TERMINATE LOCKOUT mode on the PIC II. Flashing of liquid refrigerant at low pressures can cause tube freeze-up and considerable damage.

   c. Leak test chiller as outlined in Steps 3 - 9.

2. If the pressure readings are abnormal for the chiller condition:
   a. Prepare to leak test chillers shipped with refrigerant (Step 2h).
   b. Check for large leaks by connecting a nitrogen bottle and raising the pressure to 30 psig (207 kPa). Soap test all joints. If the test pressure holds for 30 minutes, prepare the test for small leaks (Steps 2g - h).
   c. Plainly mark any leaks that are found.
   d. Release the pressure in the system.
   e. Repair all leaks.
   f. Retest the joints that were repaired.
   g. After successfully completing the test for large leaks, remove as much nitrogen, air, and moisture as possible, given the fact that small leaks may be present in the system. This can be accomplished by following the dehydration procedure, outlined in the Chiller Dehydration section, page 70.
   h. Slowly raise the system pressure to a maximum of 160 psig (1103 kPa) but no less than 35 psig (241 kPa) for HFC-134a by adding refrigerant. Proceed with the test for small leaks (Steps 3-9).
3. Check the chiller carefully with an electronic leak detector or soap bubble solution.
4. Leak Determination — If an electronic leak detector indicates a leak, use a soap bubble solution, if possible, to confirm. Total all leak rates for the entire chiller. Leakage at rates greater than 0.1% of the total charge per year must be repaired. Note the total chiller leak rate on the start-up report.
5. If no leak is found during the initial start-up procedures, complete the transfer of refrigerant gas from the pumpout storage tank to the chiller. Retest for leaks.

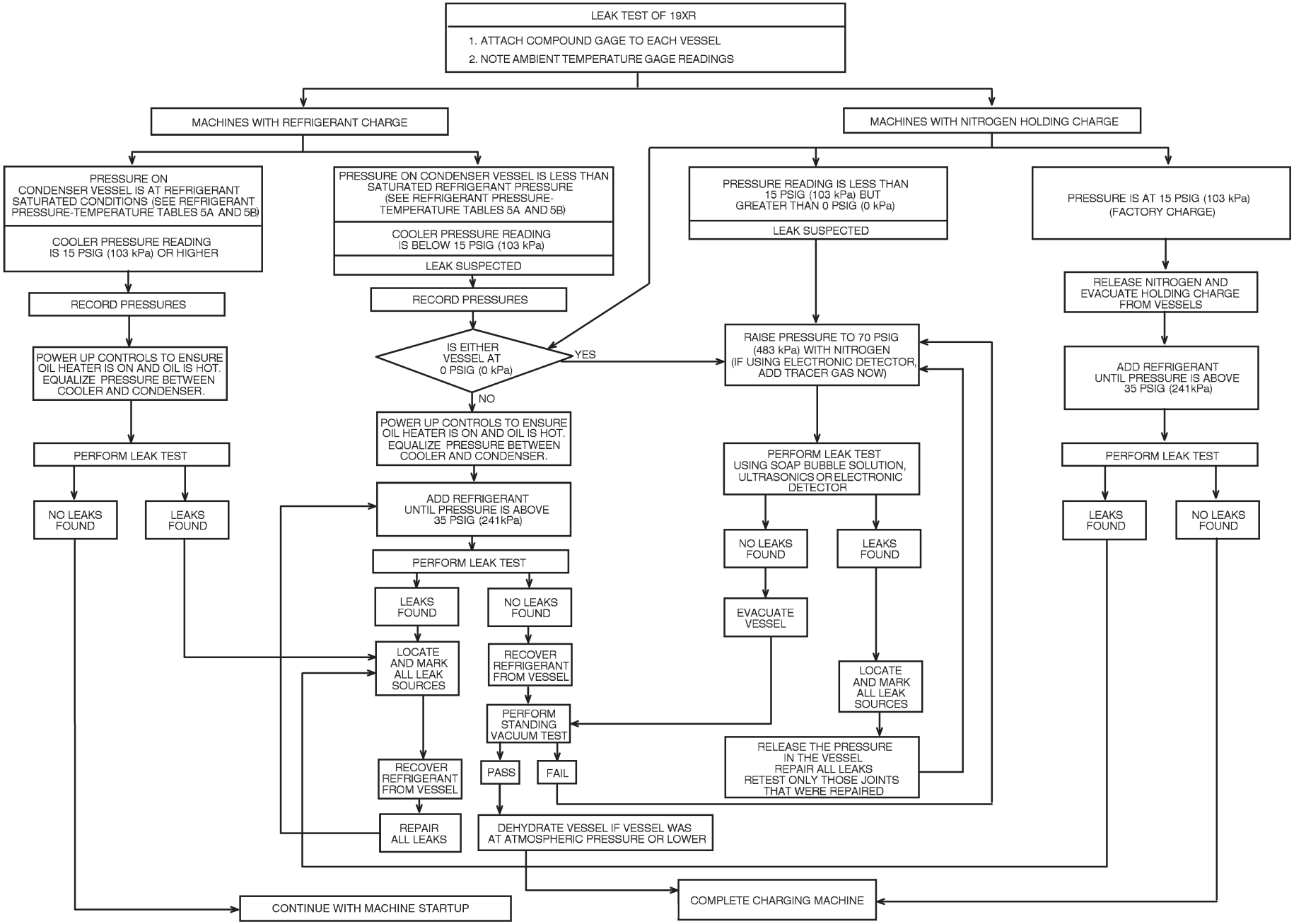

Fig. 33 — 19XR Leak Test Procedures

Table 11A — HFC-134a Pressure — Temperature (F)

TEMPERATURE, F	PRESSURE (psig)
0	6.50
2	7.52
4	8.60
6	9.66
8	10.79
10	11.96
12	13.17
14	14.42
16	15.72
18	17.06
20	18.45
22	19.88
24	21.37
26	22.90
28	24.48
30	26.11
32	27.80
34	29.53
36	31.32
38	33.17
40	35.08
42	37.04
44	39.06
46	41.14
48	43.28
50	45.48
52	47.74
54	50.07
56	52.47
58	54.93
60	57.46
62	60.06
64	62.73
66	65.47
68	68.29
70	71.18
72	74.14
74	77.18
76	80.30
78	83.49
80	86.17
82	90.13
84	93.57
86	97.09
88	100.70
90	104.40
92	108.18
94	112.06
96	116.02
98	120.08
100	124.23
102	128.47
104	132.81
106	137.25
108	141.79
110	146.43
112	151.17
114	156.01
116	160.96
118	166.01
120	171.17
122	176.45
124	181.83
126	187.32
128	192.93
130	198.66
132	204.50
134	210.47
136	216.55
138	222.76
140	229.09

Table 11B — HFC-134a Pressure — Temperature (C)

TEMPERATURE, C	PRESSURE (kPa)
–18.0	44.8
–16.7	51.9
–15.6	59.3
–14.4	66.6
–13.3	74.4
–12.2	82.5
–11.1	90.8
–10.0	99.4
–8.9	108.0
–7.8	118.0
–6.7	127.0
–5.6	137.0
–4.4	147.0
–3.3	158.0
–2.2	169.0
–1.1	180.0
0.0	192.0
1.1	204.0
2.2	216.0
3.3	229.0
4.4	242.0
5.0	248.0
5.6	255.0
6.1	261.0
6.7	269.0
7.2	276.0
7.8	284.0
8.3	290.0
8.9	298.0
9.4	305.0
10.0	314.0
11.1	329.0
12.2	345.0
13.3	362.0
14.4	379.0
15.6	396.0
16.7	414.0
17.8	433.0
18.9	451.0
20.0	471.0
21.1	491.0
22.2	511.0
23.3	532.0
24.4	554.0
25.6	576.0
26.7	598.0
27.8	621.0
28.9	645.0
30.0	669.0
31.1	694.0
32.2	720.0
33.3	746.0
34.4	773.0
35.6	800.0
36.7	828.0
37.8	857.0
38.9	886.0
40.0	916.0
41.1	946.0
42.2	978.0
43.3	1010.0
44.4	1042.0
45.6	1076.0
46.7	1110.0
47.8	1145.0
48.9	1180.0
50.0	1217.0
51.1	1254.0
52.2	1292.0
53.3	1330.0
54.4	1370.0
55.6	1410.0
56.7	1451.0
57.8	1493.0
58.9	1536.0
60.0	1580.0

6. If no leak is found after a retest:
   a. Transfer the refrigerant to the pumpout storage tank and perform a standing vacuum test as outlined in the Standing Vacuum Test section, below.
   b. If the chiller fails the standing vacuum test, check for large leaks (Step 2b).
   c. If the chiller passes the standing vacuum test, dehydrate the chiller. Follow the procedure in the Chiller Dehydration section. Charge the chiller with refrigerant.
7. If a leak is found after a retest, pump the refrigerant back into the pumpout storage tank or, if isolation valves are present, pump the refrigerant into the non-leaking vessel. See the Transfer Refrigerant from Pumpout Storage Tank to Chiller section on page 90.
8. Transfer the refrigerant until the chiller pressure is at 18 in. Hg (40 kPa absolute).
9. Repair the leak and repeat the procedure, beginning from Step 2h, to ensure a leak-tight repair. (If the chiller is opened to the atmosphere for an extended period, evacuate it before repeating the leak test.)

Standing Vacuum Test — When performing the standing vacuum test or chiller dehydration, use a manometer or a wet bulb indicator. Dial gages cannot indicate the small amount of acceptable leakage during a short period of time.

1. Attach an absolute pressure manometer or wet bulb indicator to the chiller.
2. Evacuate the vessel to at least 18 in. Hg vac, ref 30-in. bar (41 kPa), using a vacuum pump or the pump out unit.
3. Valve off the pump to hold the vacuum and record the manometer or indicator reading.
4. a. If the leakage rate is less than 0.05 in. Hg (0.17 kPa) in 24 hours, the chiller is sufficiently tight.
   b. If the leakage rate exceeds 0.05 in. Hg (0.17 kPa) in 24 hours, repressurize the vessel and test for leaks if refrigerant is available. If not, use nitrogen and a refrigerant tracer. Raise the vessel pressure in increments until the leak is detected. If refrigerant is used, the maximum gas pressure is approximately 70 psig (483 kPa) for HFC-134a at normal ambient temperature. If nitrogen is used, limit the leak test pressure to 160 psig (1103 kPa) maximum.
5. Repair the leak, retest, and proceed with dehydration.

Chiller Dehydration — Dehydration is recommended if the chiller has been open for a considerable period of time, if the chiller is known to contain moisture, or if there has been a complete loss of chiller holding charge or refrigerant pressure.

⚠ CAUTION

Do not start or megohm-test the compressor motor or oil pump motor, even for a rotation check, if the chiller is under dehydration vacuum. Insulation breakdown and severe damage may result.

⚠ WARNING

Starters must be disconnected by an isolation switch before placing the machine under a vacuum. To be safe, isolate any starter before evacuating the chiller if you are not sure if there are live leads to the hermetic motor.

Dehydration can be done at room temperatures. Using a cold trap (Fig. 34) may substantially reduce the time required to complete the dehydration. The higher the room temperature, the faster dehydration takes place. At low room temperatures, a very deep vacuum is required to boil off any moisture. If low ambient temperatures are involved, contact a qualified service representative for the dehydration techniques required.

Perform dehydration as follows:

1. Connect a high capacity vacuum pump (5 cfm [.002 m^3/s] or larger is recommended) to the refrigerant charging valve (Fig. 2 and 3). Tubing from the pump to the chiller should be as short in length and as large in diameter as possible to provide least resistance to gas flow.
2. Use an absolute pressure manometer or a wet bulb vacuum indicator to measure the vacuum. Open the shutoff valve to the vacuum indicator only when taking a reading. Leave the valve open for 3 minutes to allow the indicator vacuum to equalize with the chiller vacuum.
3. If the entire chiller is to be dehydrated, open all isolation valves (if present).
4. With the chiller ambient temperature at 60 F (15.6 C) or higher, operate the vacuum pump until the manometer reads 29.8 in. Hg vac, ref 30 in. bar (0.1 psia) (–100.61 kPa) or a vacuum indicator reads 35 F (1.7 C). Operate the pump an additional 2 hours.

   Do not apply a greater vacuum than 29.82 in. Hg vac (757.4 mm Hg) or go below 33 F (.56 C) on the wet bulb vacuum indicator. At this temperature and pressure, isolated pockets of moisture can turn into ice. The slow rate of evaporation (sublimation) of ice at these low temperatures and pressures greatly increases dehydration time.
5. Valve off the vacuum pump, stop the pump, and record the instrument reading.
6. After a 2-hour wait, take another instrument reading. If the reading has not changed, dehydration is complete. If the reading indicates vacuum loss, repeat Steps 4 and 5.
7. If the reading continues to change after several attempts, perform a leak test up to the maximum 160 psig (1103 kPa) pressure. Locate and repair the leak, and repeat dehydration.
8. Once dehydration is complete, the evacuation process can continue. Evacuate the vessel or chiller with the vacuum pump set to at least 18 in. hg vac, ref 30-in. bar (41 kPa).

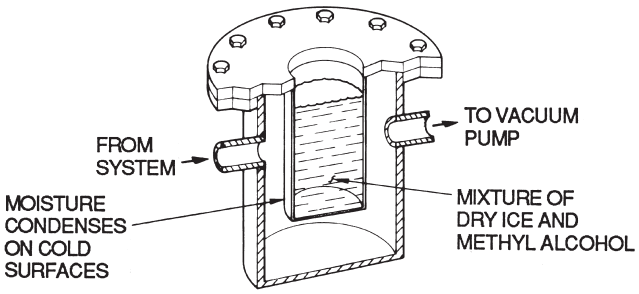

Fig. 34 — Dehydration Cold Trap

Inspect Water Piping — Refer to piping diagrams provided in the certified drawings and the piping instructions in the 19XR Installation Instructions manual. Inspect the piping to the cooler and condenser. Be sure that the flow directions are correct and that all piping specifications have been met.

Piping systems must be properly vented with no stress on waterbox nozzles and covers. Water flows through the cooler and condenser must meet job requirements. Measure the pressure drop across the cooler and the condenser.

⚠ CAUTION

Water must be within design limits, clean, and treated to ensure proper chiller performance and to reduce the potential of tube damage due to corrosion, scaling, or erosion. Carrier assumes no responsibility for chiller damage resulting from untreated or improperly treated water.

Check Optional Pumpout Compressor Water Piping — If the optional pumpout storage tank and/or pumpout system are installed, check to ensure the pumpout condenser water has been piped in. Check for field-supplied shutoff valves and controls as specified in the job data. Check for refrigerant leaks on field-installed piping.

Check Relief Valves — Be sure the relief valves have been piped to the outdoors in compliance with the latest edition of ANSI/ASHRAE Standard 15 and applicable local safety codes. Piping connections must allow for access to the valve mechanism for periodic inspection and leak testing.

The 19XR relief valves are set to relieve at the 185 psig (1275 kPa) chiller design pressure.

Inspect Wiring

⚠ WARNING

Do not check the voltage supply without proper equipment and precautions. Serious injury may result. Follow power company recommendations.

⚠ CAUTION

Do not apply any kind of test voltage, even for a rotation check, if the chiller is under a dehydration vacuum. Insulation breakdown and serious damage may result.

1. Examine the wiring for conformance to the job wiring diagrams and all applicable electrical codes.
2. On low-voltage compressors (600 v or less) connect a voltmeter across the power wires to the compressor starter and measure the voltage. Compare this reading to the voltage rating on the compressor and starter nameplates.
3. Compare the ampere rating on the starter nameplate to rating on the compressor nameplate. The overload trip amps must be 108% to 120% of the rated load amps.
4. The starter for a centrifugal compressor motor must contain the components and terminals required for PIC II refrigeration control. Check the certified drawings.
5. Check the voltage to the following components and compare it to the nameplate values: oil pump contact, pumpout compressor starter, and power panel.
6. Ensure that fused disconnects or circuit breakers have been supplied for the oil pump, power panel, and pumpout unit.
7. Ensure all electrical equipment and controls are properly grounded in accordance with job drawings, certified drawings, and all applicable electrical codes.
8. Ensure the customer's contractor has verified proper operation of the pumps, cooling tower fans, and associated auxiliary equipment. This includes ensuring motors are properly lubricated and have proper electrical supply and proper rotation.
9. For field-installed starters only, test the chiller compressor motor and its power lead insulation resistance with a 500-v insulation tester such as a megohmmeter. (Use a 5000-v tester for motors rated over 600 v.) Factory-mounted starters do not require a megohm test.
   a. Open the starter main disconnect switch and follow lockout/tagout rules.

⚠ CAUTION

If the motor starter is a solid-state starter, the motor leads must be disconnected from the starter before an insulation test is performed. The voltage generated from the tester can damage the starter solid-state components.

   b. With the tester connected to the motor leads, take 10-second and 60-second megohm readings as follows:

      6-Lead Motor — Tie all 6 leads together and test between the lead group and ground. Next tie the leads in pairs: 1 and 4, 2 and 5, and 3 and 6. Test between each pair while grounding the third pair.

      3-Lead Motor — Tie terminals 1, 2, and 3 together and test between the group and ground.
   c. Divide the 60-second resistance reading by the 10-second reading. The ratio, or polarization index, must be one or higher. Both the 10 and 60-second readings must be at least 50 megohms.

      If the readings on a field-installed starter are unsatisfactory, repeat the test at the motor with the power leads disconnected. Satisfactory readings in this second test indicate the fault is in the power leads.

      NOTE: Unit-mounted starters do not have to be megohm tested.
10. Tighten all wiring connections to the plugs on the ISM and CCM modules.
11. On chillers with free-standing starters, inspect the power panel to ensure that the contractor has fed the wires into the bottom of the panel. The installation of wiring into the top of the panel can cause debris to fall into the contactors. Clean and inspect the contactors if this has occurred.

Carrier Comfort Network® Interface — The Carrier Comfort Network (CCN) communication bus wiring is supplied and installed by the electrical contractor. It consists of shielded, 3-conductor cable with drain wire.

The system elements are connected to the communication bus in a daisy chain arrangement. The positive pin of each system element communication connector must be wired to the positive pins of the system element on either side of it. The negative pins must be wired to the negative pins. The signal ground pins must be wired to the signal ground pins. See installation manual.

NOTE: Conductors and drain wire must be 20 AWG (American Wire Gage) minimum stranded, tinned copper. Individual conductors must be insulated with PVC, PVC/nylon, vinyl, Teflon, or polyethylene. An aluminum/polyester 100% foil shield and an outer jacket of PVC, PVC/nylon, chrome vinyl, or Teflon with a minimum operating temperature range of –4 F to 140 F (–20 C to 60 C) is required. See table below for cables that meet the requirements.

MANUFACTURER	CABLE NO.
Alpha	2413 or 5463
American	A22503
Belden	8772
Columbia	02525

When connecting the CCN communication bus to a system element, a color code system for the entire network is recommended to simplify installation and checkout. The following color code is recommended:

SIGNAL TYPE	CCN BUS CONDUCTOR INSULATION COLOR	CCN TERMINAL CONNECTION	ICVC PLUG J1 PIN NO.
+	Red	RED (+)	1
Ground	White	WHITE (G)	2
–	Black	BLACK (–)	3

Check Starter

⚠ CAUTION

BE AWARE that certain automatic start arrangements *can engage the starter*. Open the disconnect *ahead* of the starter in addition to shutting off the chiller or pump.

Use the instruction and service manual supplied by the starter manufacturer to verify the starter has been installed correctly, to set up and calibrate the starter, and for complete troubleshooting information.

⚠ CAUTION

The main disconnect on the starter front panel may not deenergize all internal circuits. Open all internal and remote disconnects before servicing the starter.

MECHANICAL STARTER

1. Check all field wiring connections for tightness, clearance from moving parts, and correct connection.
2. Check the contactor(s) to ensure they move freely. Check the mechanical interlock between contactors to ensure that 1S and 2M contactors cannot be closed at the same time. Check all other electro-mechanical devices, such as relays, for free movement. If the devices do not move freely, contact the starter manufacturer for replacement components.
3. Reapply starter control power (*not main chiller power*) to check the electrical functions.

   Ensure the starter (with relay 1CR closed) goes through a complete and proper start cycle.

BENSHAW, INC. RediStart MX3™ SOLID-STATE STARTER

⚠ WARNING

This equipment is at line voltage when AC power is connected. Pressing the STOP button does not remove voltage.

⚠ CAUTION

An isolation switch or circuit breaker must be open ahead of any VFD or solid-state starter when the chiller is in a vacuum. If not, damage to the machine may result.

1. Ensure all wiring connections are properly terminated to the starter.
2. Verify the ground wire to the starter is installed properly and is sufficient size.
3. Verify the motors are properly grounded to the starter.
4. Verify the proper ac input voltage is brought into the starter according to the certified drawings.
5. Apply power to the starter

VFD STARTER

1. Turn off unit, tag and lock disconnects and wait 5 minutes.
2. Verify that the DC voltage is zero.
3. Ensure there is adequate clearance around the drive.
4. Verify that the wiring to the terminal strip and power terminals is correct.
5. Verify that wire size is within the terminal specification and the wires are secure.
6. Inspect the field supplied branch circuit protection is properly rated and installed.
7. Verify that the system is properly grounded.
8. Inspect all liquid cooling connections for leaks.

Oil Charge — The oil charge for the 19XR compressor depends on the compressor Frame size:

- Frame 2 compressor — 8 gal (30 L)
- Frame 3 compressor — 8 gal (30 L)
- Frame 4 compressor — 10 gal (37.8 L)
- Frame 4 compressor with split ring diffuser option — 12 gal (45.0 L)
- Frame 5 compressor — 18 gal (67.8 L)
- Frame E compressor — 18 gal (67.8 L)

The chiller is shipped with oil in the compressor. When the sump is full, the oil level should be no higher than the middle of the upper sight glass, and minimum level is the bottom of the lower sight glass (Fig. 2 and 3). If oil is added, it must meet Carrier's specification for centrifugal compressor use as described in the Oil Specification section. Charge the oil through the oil charging valve located near the bottom of the transmission housing (Fig. 2 and 3). The oil must be pumped from the oil container through the charging valve due to higher refrigerant pressure. The pumping device must be able to lift from 0 to 200 psig (0 to 1380 kPa) or above unit pressure. Oil should only be charged or removed when the chiller is shut down.

Power Up the Controls and Check the Oil Heater — Ensure that an oil level is visible in the compressor and the chiller is not in an vacuum before energizing the controls. A circuit breaker in the starter energizes the oil heater and the control circuit. When first powered, the ICVC should display the default screen within a short period of time.

The oil heater is energized by powering the control circuit. This should be done several hours before start-up to minimize oil-refrigerant migration. The oil heater is controlled by the PIC II and is powered through a contactor in the power panel. A separate circuit breaker powers the heater and the control circuit. This arrangement allows the heater to energize when the main motor circuit breaker is off for service work or extended shutdowns. The oil heater relay status (*OIL HEATER RELAY*) can be viewed on the COMPRESS table on the ICVC. Oil sump temperature can be viewed on the ICVC default screen.

SOFTWARE VERSION — The software part number is labeled on the backside of the ICVC module. The software version also appears on the ICVC CONFIGURATION screen as the last two digits of the software part number.

Software Configuration

⚠ WARNING

Do not operate the chiller before the control configurations have been checked and a Control Test has been satisfactorily completed. Protection by safety controls cannot be assumed until all control configurations have been confirmed.

As the 19XR unit is configured, all configuration settings should be written down. A log, such as the one shown on pages CL-1 to CL-14, provides a list for configuration values.

Input the Design Set Points — Access the ICVC set point screen and view/modify the base demand limit set point, and either the LCW set point or the ECW set point. The PIC II can control a set point to either the leaving or entering chilled water. This control method is set in the EQUIPMENT SERVICE (TEMP_CTL) table.

Input the Local Occupied Schedule (OCCPC01S) — Access the schedule OCCPC01S screen on the ICVC and set up the occupied time schedule according to the customer's requirements. If no schedule is available, the default is factory set for 24 hours occupied, 7 days per week including holidays.

For more information about how to set up a time schedule, see the Time Schedule Operation section, page 26.

The CCN Occupied Schedule (OCCPC03S) should be configured if a CCN system is being installed or if a secondary time schedule is needed.

NOTE: The default CCN Occupied Schedule OCCPC03S is configured to be occupied.

Input Service Configurations — The following configurations require the ICVC screen to be in the SERVICE portion of the menu.

- password
- input time and date
- ICVC configuration
- service parameters
- equipment configuration
- automated control test

PASSWORD — When accessing the SERVICE tables, a password must be entered. All ICVCs are initially set for a password of 1-1-1-1.

INPUT TIME AND DATE — Access the TIME AND DATE table on the SERVICE menu. Input the present time of day, date, and day of the week. The *HOLIDAY TODAY* parameter should only be configured to YES if the present day is a holiday.

NOTE: Because a schedule is integral to the chiller control sequence, the chiller will not start until the time and date have been set.

NOTE: The date format is MM-DD-YY for English units and DD-MM-YY for SI units.

CHANGE ICVC CONFIGURATION IF NECESSARY — From the SERVICE table, access the ICVC CONFIGURATION screen. From there, view or modify the ICVC CCN address, change to English or SI units, and change the password. If there is more than one chiller at the jobsite, change the ICVC address on each chiller so that each chiller has its own address. Note and record the new address. Change the screen to SI units as required, and change the password if desired.

TO CHANGE THE PASSWORD — The password may be changed from the ICVC CONFIGURATION screen.

1. Press the MENU and SERVICE softkeys. Enter the current password and highlight ICVC CONFIGURATION. Press the SELECT softkey. Only the last 5 entries on the ICVC CONFIG screen can be changed: *BUS NUMBER, ADDRESS NUMBER, BAUD RATE, US IMP/METRIC*, and *PASSWORD*.
2. Use the ENTER softkey to scroll to *PASSWORD*. The first digit of the password is highlighted on the screen.
3. To change the digit, press the INCREASE or DECREASE softkey. When the desired digit is seen, press the ENTER softkey.
4. The next digit is highlighted. Change it, and the third and fourth digits in the same way the first was changed.
5. After the last digit is changed, the ICVC goes to the *BUS NUMBER* parameter. Press the EXIT softkey to leave that screen and return to the SERVICE menu.

⚠ CAUTION

Be sure to remember the password. Retain a copy for future reference. Without the password, access to the SERVICE menu will not be possible unless the ICVC_PSWD menu on the STATUS screen is accessed by a Carrier representative.

TO CHANGE THE ICVC DISPLAY FROM ENGLISH TO METRIC UNITS — By default, the ICVC displays information in English units. To change to metric units, access the ICVC CONFIGURATION screen.

1. Press the MENU and SERVICE softkeys. Enter the password and highlight ICVC CONFIGURATION. Press the SELECT softkey.
2. Use the ENTER softkey to scroll to *US IMP/METRIC*.
3. Press the softkey that corresponds to the units desired for display on the ICVC (e.g., US or METRIC).

CHANGE LANGUAGE — By default, the ICVC displays information in English. To change to another Language, access the ICVC CONFIGURATION screen:

1. Press the MENU and SERVICE softkeys. Enter the password and highlight ICVC CONFIGURATION. Press the SELECT softkey.
2. Use the ENTER softkey to scroll to *LID LANGUAGE*.
3. Press the INCREASE or DECREASE softkey until the desired language is displayed. Press ENTER to confirm desired language.

MODIFY CONTROLLER IDENTIFICATION IF NECESSARY — The ICVC module address can be changed from the ICVC CONFIGURATION screen. Change this address for each chiller if there is more than one chiller at the jobsite. Write the new address on the ICVC module for future reference.

INPUT EQUIPMENT SERVICE PARAMETERS IF NECESSARY — The EQUIPMENT SERVICE menu has six or seven service tables depending on the ICVC software version.

Configure SERVICE Tables — Access the SERVICE tables, shown in Table 3, to modify or view job site parameters shown in Table 12.

CHANGE THE BENSHAW INC., RediStart MX3 SOFTWARE CONFIGURATION IF NECESSARY — Benshaw starter configurations are checked and modified from the menus in the Benshaw Redistart MX3 Default Display. See Fig. 35 and Table 13 for default display and menu items. To access the menus to perform checks and modifications, the Benshaw starter must be powered up and its self-test must have been successfully completed. The self-test takes place automatically after power-up. Current and Ramp Time configurations

are entered in the CFN menu. CT Ratio configuration is entered in the FUN menu. See Table 13 for menu structure and Table 14 for settings.

1. Press the MENU softkey until the desired menu is selected on the display.
2. Press the ENTER softkey to access the displayed menu items (Table 14).
3. Use the ↓ or ↑ arrow keys to scroll between menu items until the desired item is reached on the display.
4. Press the ENTER softkey to access the value to be changed.
5. Use the ↑ or ↓ arrow keys to adjust the new displayed value. The ↑ key increases the value while the ↓ key decreases the value. Holding the arrow key will progressively increase the rate of change. The value will stop changing when either the factory set minimum or maximum value is reached. To make fine adjustments press and release the arrow key.
6. When the correct value has been selected, press the ENTER key to store the new configuration. At this point, there are two options. The MENU key will return the display to the main display. The ↑ or ↓ arrow keys will move the display to the next menu item. When finished press the MENU key to return to the main display.

To view other settings and troubleshooting guide consult the Benshaw RediStart MICRO instructional manual included in the starter.

VFD Field Setup and Verification

IMPORTANT: The VFD controller has been factory configured for use and communications to the International Chiller Visual Controller (ICVC). Some parameters are specific to the chiller configuration and will need to be verified prior to operation. Speed control and starting the drive have been disabled at the VFD keypad. All command functions must be initiated from the ICVC.

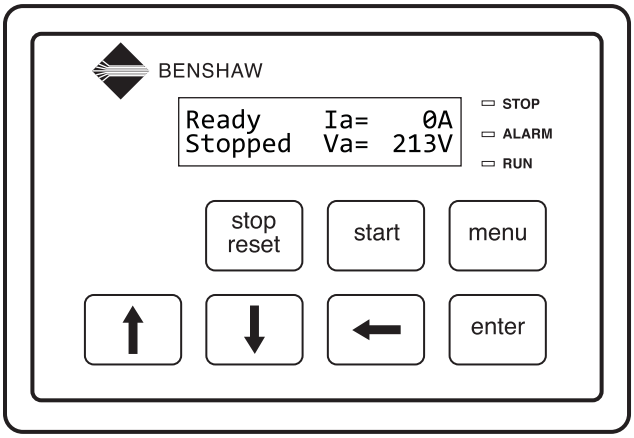

Fig. 35 — Benshaw RediStart MICRO Default Display

Table 12 — Job Site Parameters

PARAMETER	TABLE
Starter Type	ISM_CONF — Select 0 for full voltage, 1 for reduced voltage, or 2 for solid state or 3 for variable frequency drive.
Motor Rated Line Voltage	ISM_CONF — Motor rated voltage from chiller information nameplate.
Volt Transformer Ratio	ISM_CONF — Enter ratio (reduced to a ratio to 1) of power transformer wired to terminal J3 of ISM. If no transformer is used enter 1.
Motor Rated Load Amps	ISM_CONF — Per chiller nameplate data. RL AMPS on compressor nameplate.
Motor Locked Rotor Trip	ISM_CONF — Per chiller identification nameplate.
Starter LRA Rating	ISM_CONF — Enter value from nameplate in starter cabinet MAXIMUM FUSE. This value shall always be “9999” for Benshaw RediStart MX3 wye-delta and solid-state starters.
Motor Current CT Ratio	ISM_CONF — Enter ratio (reduced to a ratio to 1) of current transformers wired to terminal J4 of ISM. This value shall always be “100” for Benshaw RediStart MX3 wye-delta and solid-state starters.
Current% Imbalance	ISM_CONF — Current imbalance trip threshold. Enter up to 100% for starter type 3 (VFD).
Ground Fault Current Transformers	ISM_CONF — Enter 0 if no ground fault CTs are wired to terminal J5 of ISM. Enter 1 if ground fault CTs are used.
Ground Fault CT Ratio	ISM_CONF — Enter ratio (reduced to a ratio to 1) of ground fault CT.
Single Cycle Dropout	ISM_CONF — ENABLE if motor protection required from drop in line voltage within one cycle.
Line Frequency	ISM_CONF — Enter YES for 60 Hz or NO for 50 Hz.
Line Frequency Faulting	ISM_CONF — ENABLE if motor protection required for drop in line frequency.
Surge Limit/Hot Gas Bypass Option	OPTIONS — Enter 1 or 2 if HGBP is installed. Enter 0 otherwise.

*With variable flow systems this point may be configured to the lower end of the range.
NOTE: Other parameters: Screens are normally left at the default settings; they may be changed by the operator as required. The time and persistence settings on the ISM_CONF table can be adjusted to increase or decrease the sensitivity to a fault condition. Increasing time or persistence decreases sensitivity. Decreasing time or persistence increases sensitivity to the fault condition.

PARAMETER	TABLE
Minimum Load Points (Tsmin, IGVmin)	OPTIONS — Per Chiller Requisition (Tsmin, IGVmin) if available or per job data — See modify load points section. Refer to table located in the control panel.
Full (Maximum) Load Points (Tsmax, IGVmax)	OPTIONS — Per Chiller Requisition (Tsmax, IGVmax) if available or per job data — See modify load points section. Refer to table located in the control panel.
Surge Line Shape Factor (shapefac)	OPTIONS — Per Chiller Requisition (shapefac). Refer to table located in the control panel.
Chilled Medium	SETUP1 — Enter water or brine.
Evaporator Refrigerant Trippoint	SETUP1 — Usually 3° F (1.7° C) below design refrigerant temperature.
Evaporator Flow Delta P Cutout	SETUP1 — Per Chiller Requisition if available or enter 50% of design pressure drop to 0.5 psi (3.4 kPa).*
Condenser Flow Delta P Cutout	SETUP1 — Per Chiller Requisition if available or enter 50% of design pressure drop to 0.5 psi (3.4 kPa).*
High Condenser Water Delta P	SETUP1 — Enter the maximum allowable value for condenser water pressure drop.
VFD Option	SETUP2 — ENABLE if a VFD is supplied for the chiller.
VFD Current List	SETUP2 — Enter the value fo the full load output amps of the VFD.
Diffuser Option (Compressors with Split Ring Diffusers)	VDO_SRD — ENABLE for 4 and 5 size compressor with split ring diffusers. See model number nomenclature.
Diffuser Full Span mA (Compressors with Split Ring Diffusers)	SETUP2 VDO_SRD — Enter diffuser actuator full span mA rating for 4 and 5 size compressor. Value is located on label on side of diffuser actuator motor.
Motor Rated Kilowatts	RAMP_DEM — Enter value from chiller requisition form (product data submittal) if DEMAND LIMIT SOURCE is set to kW.

Table 13 — Benshaw RediStart MX3 Menu Structure

ISM MENU	CFN MENU	FUN MENU	FL MENU	E MENU
Shows parameters entered on the ISM_CONF screen on the ICVC	Initial Current as % RLA	Meter #1 display	Fault Log (9 faults)	Event Log (99 events)
	Max. Current As% LRA	Meter #2 display		
	Ramp Time (seconds)	CT Ratio		
		Time & Date Format		
		Time		
		Date		
		Passcode		

Table 14 — Benshaw RediStart MX3 Menu Items*

DESCRIPTION	BENSHAW PARAMETER	RANGE	UNITS	DEFAULT
INITIAL CURRENT	CFN01	50-300	%	125
MAX. CURR AS % LRA	CFN02	30-70	%	55
RAMP TIME	CFN03	5-30	SEC	15
CT RATIO	FUN03	2640-5760		†

*These values are not displayed in the ISM_CONF table.
†Current Transformer Ratio

Starter Frame Size (Amps)	Motor RLA Range (Amps)	CT Ratio
200 Amps	95-135 Amps	864:1
200 Amps	136-200 Amps	2640:1
300 Amps	201-231 Amps	2640:1
300 Amps	232-300 Amps	2640:1
480 Amps	301 -340 Amps	2640:1
480 Amps	341-480 Amps	3900:1
600 Amps	481-580 Amps	3900:1
600 Amps	581-600 Amps	3900:1
740 Amps	601-740 Amps	3900:1
1250 Amps	741-855 Amps	5760:1
1250 Amps	856-1250 Amps	5760:1

⚠ CAUTION

Changing parameters may adversely affect chiller operation.

See the Initial Start-Up Checklist section for VFD Job Specific Configuration table. For job specific parameters see inside of the VFD enclosure door. Refer to the VFD Configuration table for the entire list of parameters.

LABEL LOCATIONS — Verify the following labels have been installed properly and match the chiller requisition:

- Surge Parameters — Located inside the chiller control panel.
- Chiller identification nameplate — Located on the right side of the control panel. (See Fig. 36.)
- VFD Parameter (Unit-Mounted VFD Only) — Located on the inside of the VFD door.
- VFD Enclosure Nameplate (Unit-Mounted VFD Only) — Located on the right side of the VFD as viewed from its front. (See Fig. 36.)

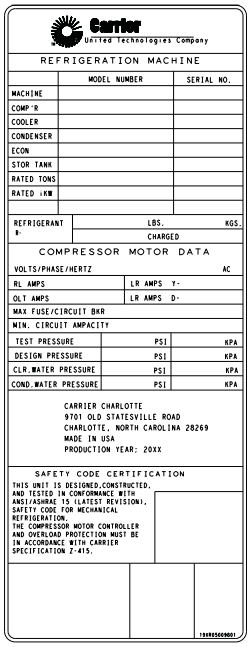

CHILLER ID NAMEPLATE — CONSTANT SPEED CHILLER

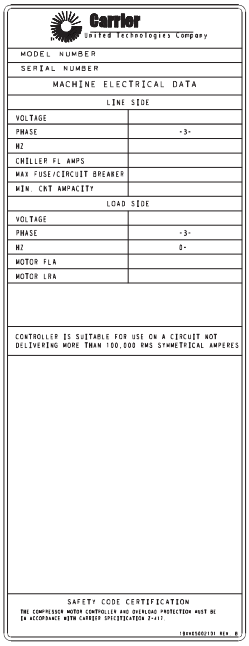

VFD ENCLOSURE NAMEPLATE

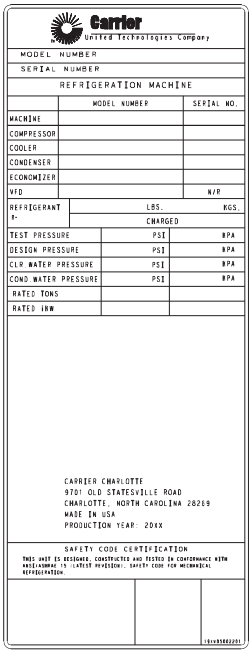

CHILLER ID NAMEPLATE — VFD-EQUIPPED CHILLER

Fig. 36 — Machine Electrical Data Nameplates

DRIVE PROTECTION AND OTHER INCOMING WIRING

1. Verify that the branch disconnects or other local disconnects are open and properly tagged out.
2. Verify that the branch circuit protection and AC input wiring to the VFD are in accordance with NEC/CEC (National Electrical Code/California Energy Commission) and all other local codes.
3. Verify that the fuses are per the field wiring diagram.
4. Verify that the incoming source does not exceed 85 kA.
5. Verify the power lugs in the VFD and branch protection are properly secured. Inspect the ground cable and ensure it is properly connected at the branch and to the ground lug in the VFD.
6. Verify the conduit for the power wiring in securely connected to the VFD flanged cover and runs continuously to the branch protection.
7. Verify that the incoming and outgoing wires have been properly connected inside of the line reactor enclosure if a separate line reactor has been added to the chiller.
8. Ensure the control and signal wires connected to the chiller controller or the VFD are in separate conduit.

VFD Cooling System Leak Inspection

1. Check for leaks on the refrigerant cooling flange connections to the VFD enclosure.
2. Check for leaks on all tubing internal to the VFD enclosure, the tubing flair connection to the VFD module and the TXV valve.

Power Up Verification

1. Inspect control wiring inside the VFD and verify the integrity of the connections between the integrated starter module (ISM) and the VFD module.
2. Close the control power switch in the VFD enclosure.
3. Close the oil pump power switch inside the VFD enclosure.
4. Verify the VFD disconnect switch is in the open position.
5. Close and latch the doors of the VFD enclosure.
6. Apply power to the VFD enclosure. Remove lock outs and close all disconnects.
7. Verify that the ICVC display powers up and goes to the default screen.
8. Close the VFD disconnect switch.

The VFD is configured to attempt an automatic reset of minor faults every 30 seconds. After a total of 10 failed attempts to reset a fault, the fault code will be shown and the VFD will be disabled.

ICVC Parameters for VFD — The chiller controller must have its job specific parameters set as defined by the job sheet or installed nameplates. Below are the job specific parameters that must be set:

To access the ISM_CONF screen:

1. Press ENTER.
2. Press SERVICE.
3. Enter the password 1111.
4. Select ISM (CONFIG STARTER DATA)
5. Scroll down and select the ISM_CONF DATA screen to modify or view the ISM parameters:

DESCRIPTION	SETTING
STARTER TYPE (3 = VFD)	3
MOTOR RATED LINE VOLTAGE	VOLTAGE from "Load Side" section of the VFD enclosure nameplate.
MOTOR RATED LOAD AMPS	CHILLER FL AMPS from "Line Side" section of the VFD enclosure nameplate
MOTOR LOCKED ROTOR TRIP	MOTOR LRA from "Load Side" section of the VFD enclosure nameplate
STARTER LRA RATING	600 for VFD part #19XVR0414XXX 750 for VFD part #19XVR0500XXX 900 for VFD part #19XVR0643XXX
MOTOR CURRENT CT RATIO:1	163 (500A and 643A VFDs) 120 (414A VFDs)
3 GRND FAULT CT? (1=NO)	NO
FREQUENCY-60HZ (YES=60)	YES for 60 Hz selection NO for 50 Hz selection

6. Press to the SAVE softkey to save changes when exiting the ISM_CONF screeen.
7. Press the EXIT softkey to and exit the ISM Configuration Screen.

VFD Enable Configuration — To access the parameters:

1. Press MENU.
2. Press SERVICE.
3. Select EQUIPMENT SERVICE.
4. Scroll down and select SETUP2.
5. Verify the following parameters:

VFD OPTION	ENABLED
VFD CURRENT LIMIT	MOTOR FLA from "Load Side" section of the VFD enclosure nameplate

Configure Surge Parameters

1. Press MENU.
2. Press SERVICE.
3. Select EQUIPMENT SERVICE and OPTIONS to verify that the parameters in the applicable table below match the surge prevention parameters for the design conditions of the chiller. These parameters are found on a label on the bottom surface of the inside of the chiller control panel.

DESCRIPTION	SETTINGS
SURGE/HGBP DELTA TSMIN	Surge parameter label
SURGE/HGBP IGVMIN	Surge parameter label
SURGE/HGBP DELTA TSMAX	Surge parameter label
SURGE/HGBP IGVMAX	Surge parameter label
SURGE LINE SHAPE FACTOR	Surge parameter label

VFD CONTROL VERIFICATION (Non-Running) — In order to verify and, if necessary, tune the speed control signal of the chiller controller to the VFD (ISM terminal J8-1 labeled 4-20 mA OUT VFD) and the speed feedback signal from the VFD to the chiller controller (ISM terminal J8-2 labeled VFD HZ), follow the steps below.

Set *TARGET VFD SPEED* to 0%.

1. Press MENU.
2. Press STATUS.

3. Press COMPRESS.
4. Press SELECT.
5. Set *TARGET VFD SPEED* to 0%.

Verify that the *VFD SPEED REFERENCE* shown on the VFD display is within 0 to 1 Hz of zero.

1. Press the ENTER softkey on the VFD keypad until all LEDs on the left side of the keypad are illuminated except the Password LED.

   NOTE: The value shown in the VFD display is the frequency at which the VFD is being commanded to operate. This value is called the VFD Speed reference.
2. Verify that the actual speed signal feedback to the chiller controller is 0% by accessing the ACTUAL VFD SPEED in the ICVC COMPRESS screen.
3. Verify ACTUAL VFD SPEED is 0% to 1% on the ICVC.

Set TARGET VFD SPEED to 100%.

1. Press MENU.
2. Press STATUS.
3. Press COMPRESS.
4. Press SELECT.
5. Set *TARGET VFD SPEED* to 100%.

Verify that the VFD Speed Reference shown on the VFD display corresponds to the 50 or 60 Hz setting (100% TARGET VFD SPEED).

1. Confirm that the VFD Speed reference displays the TARGET VFD SPEED frequency within ± 1 Hz.
2. Release the TARGET VFD SPEED so that it can operate in automatic mode. (Refer to Override Operations Section on page 22.)

VFD CONTROL VERIFICATION (Running)

Preparation

1. Disconnect power to the VFD. Verify that the branch disconnects or other local disconnects are open and properly tagged out.
2. Connect a voltmeter and ampmeter to the line side of the VFD. Locate meters safely away from the power cables.
3. Reconnect power to the VFD.
4. Measure the voltage on the line side of the drive.
5. Verify it is within 10% of the chiller nameplate voltage.
6. Set up the ICVC set point per the requirements of the job.
7. Start the chiller and verify the rotation of the compressor just as it starts.
8. Allow the chiller to load up. Verify that the chiller loads up smoothly.

NOTE: One or two surges may be counted during the first minute of operation.

Verify That Actual VFD Speed is 100% (±2%)

1. Set the *TARGET VFD SPEED* in the COMPRESS screen to 100%.
2. Verify that the *ACTUAL VFD SPEED* is 100% (± 2%).
3. Leave running for the next test.

ISM Current Calibration Check

1. With the *TARGET VFD SPEED* at 100%, load the chiller so that the ICVC default display shows 75% to 100% under the display title AMPS %. A higher load is preferred.
2. Measure the incoming current of all three input phases with a separate true RMS amp meter.
3. Calculate an average Amp Meter Current of the three input phases.
4. Calculate the line side error ratio using the following equation:

$$\text{Error Ratio} = \frac{\text{Amp Meter current} - \textit{ACTUAL LINE CURRENT*}}{\text{Amp Meter current}}$$

* in POWER screen.

5. Shut down the chiller.
6. If the Line Side Error Ratio is greater than ± 0.02 **adjust the ICVC reading by adjusting the MOTOR CURRENT CT RATIO** in the ISM_CONF screen. This screen can only be accessed when the chiller is not running.

Change CT Ratio

1. New MOTOR CURRENT CT RATIO = Present MOTOR CURRENT CT RATIO multiplied by (1+ Line Side Error Ratio).

   To access the ISM_CONF screen:
2. Press ENTER.
3. Press SERVICE.
4. Enter the password 1111.
5. Select ISM (STARTER) CONFIG DATA.
6. Enter password 4444.
7. Select ISM_CONF.
8. Change present MOTOR CURRENT CT RATIO to new ratio using calculation above.
9. Press to the SAVE softkey to save changes.
10. Press the EXIT softkey to exit the ISM_CONF screen.
11. Repeat ISM Current Calibration Check.

VFD Current Control Calibration Check

1. With the TARGET VFD SPEED at 100%, load the chiller so that the ICVC default display shows 75% to 100% under the ICVC default screen display title AMPS %. A higher load is preferred.
2. Access the current on the keypad of the VFD. Determine the *Load Side Current Ratio*, using the equation below.

$$\text{Load Side Current Ratio} = \frac{\text{VFD Actual Load Amps (from VFD)}}{\text{VFD CURRENT LIMIT (in SETUP2)}}$$

   Next, access the VFD LOAD FACTOR on the Capacity Control screen. Calculate the Load Side Error Ratio using the equation below:

$$\text{Load Side Error Ratio} = \frac{\text{VFD LOAD FACTOR} - \text{Load Side Current Ratio}}{\text{Load Side Current Ratio}}$$

3. If the load side error ratio is greater than ± 0.02, adjust the VFD LOAD FACTOR by changing the VFD CURRENT LIMIT on the Setup 2 screen.
   a. The new VFD CURRENT LIMIT = old VFD CURRENT LIMIT multiplied by (1+ Load Side Error Ratio).
   b. Recheck the VFD Current Control Calibration.
   c. Release the Speed Control by accessing the *TARGET VFD SPEED* control.
      Press MENU.
      Press STATUS.
      Press COMPRESS.
      (Refer to Override Operations section on page 22.)

HAND CALCULATE SURGE PREVENTION CONFIGURATIONS — The configurations entered determine the Surge Prevention line that the controls use to raise the speed of the VFD if the compressor operating point nears this line.

Calculate ΔP maximum and ΔP minimum using 2 point method in the preceding section. If the original selection configuration points are available, use ΔP1 and ΔP4 from that selection as ΔP maximum and ΔP minimum. If the original selection configuration was for a 2 point surge line, use ΔP1 and ΔP2.

Use the default values for the following configurations:

- Surge / HGBP IGV min. = 5.0
- Surge / HGBP IGV max = 100.0
- Surge Line Shape Factor = -0.040
- Surge Line Speed Factor = 1.85
- Surge Line High Offset = 1.0
- Surge/ HGBP Deadband = 1

Calculate Surge/ HGBP Delta Tsmin — Convert design suction temp to pressure using an R-134a pressure/temperature chart.

Min. Cond. Pressure = (suction pressure) + (ΔP minimum)

Convert *Min. Cond. Pressure* to *Min. Cond. Temperature* using a saturation pressure/temperature chart for R-134a.

Surge / HGBP Tsmin = (Min. Cond. Temp.) – (design suction temperature)

Calculate Surge/ HGBP Delta Tsmax

Max. Cond. Pressure = (suction pressure) + (ΔP maximum)

Convert *Max. Cond. Pressure* to *Max. Cond. Temperature* using a saturation pressure/temperature chart for R-134a.

Surge / HGBP Tsmax = (Max. Cond. Temp) – (design suction temperature)

VPF Surge Prevention Configurations are defined as follows:

- Surge/HGBP Delta Tsmin is the minimum difference between cooler and condenser saturation temperatures. (See Fig. 37.)
- Surge/HGBP IGVmin is the lowest position of the guide vanes that affects Surge prevention. This is not likely to require adjustment at the jobsite other than to ensure that it matches the value supplied with the machine selection.

These values produce the minimum load point of the Surge Prevention line:

- Surge/HGBP Delta Tsmax is the maximum difference between cooler and condenser saturation temperatures. (See Fig. 38.)
- Surge/HGBP IGVmax is the highest position of the guide vanes that affects Surge prevention. This is not likely to require adjustment at the jobsite other than to ensure that it matches the value supplied with the machine selection.

NOTE: The preceding two values produce the full load point of the surge prevention line.

- Surge Line Shape Factor determines the curvature of the line mainly in the low load zone. (See Fig. 39.)
- Surge Line Speed Factor determines how much the surge line moves to accommodate lower compressor speed. As compressor speed drops the ΔT values on the surge prevention line decrease. Increasing the Speed Factor causes Surge Prevention to activate sooner as the compressor speed drops. (See Fig. 40.)
- Surge Line High Offset determines the ΔT increase beyond the surge prevention line where the high stage of Surge Prevention takes effect. The high stage produces larger RPM increase steps. This is not likely to require adjustment at the jobsite other than to ensure that it matches the value supplied with the machine selection
- Surge/HGBP Deadband controls the amount the *ACTIVE DELTA TSAT* must drop below the Surge Prevention to de-activate Surge Prevention.

Fine Tuning VPF Surge Prevention — Figures 37-40 show how the parameters defined below will affect the configured surge line.

NOTE: Before tuning surge prevention check for VFD speed limitation or capacity overrides. If the source of low capacity is found in one of these places, do not proceed with an attempt to tune the Surge Prevention configurations.

If capacity is not reached

and

1. ACTUAL GUIDE VANE POSITION < GUIDE VANE TRAVEL RANGE

and

2. SURGE PREVENTION ACTIVE = YES

and

3. PERCENT LINE CURRENT < 100%

then the surge line is probably too conservative.

Note the following parameters from ICVC when maximum AVERAGE LINE CURRENT achieved:

- EVAPORATOR REFRIGERANT TEMP
- EVAPORATOR PRESSURE
- CONDENSER REFRIG TEMP
- CONDENSER PRESSURE
- ACTUAL GUIDE VANE POSITION
- AVERAGE LINE CURRENT

The ACTIVE DELTA Tsat and the SURGE LINE DELTA TSAT can be monitored on the VPF_STAT screen. When DELTA TSAT exceeds SURGE LINE DELTA TSAT surge prevention will occur.

If ACTUAL GUIDE VANE POSITION is less than 30%, then increase SURGE/HGBP DELTA TSMIN in steps of 2º F until one of the three conditions listed above no longer applies. Do not change SURGE/HGBP DELTA TSMAX.

If ACTUAL GUIDE VANE POSITION is greater than 60%, then increase SURGE/HGBP DELTA TSMAX in steps of 2º F until cooling capacity is reached or one of conditions listed above no longer applies. Do not change SURGE/HGBP DELTA TSMIN.

If ACTUAL GUIDE VANE POSITION is more than 30% AND less than 60%, then:

1. Increase SURGE/HGBP DELTA TSMIN in steps of 2º F.
2. Increase SURGE/HGBP DELTA TSMAX in steps of 2º F.
3. Repeat Steps 1 and 2 until one of the conditions listed above no longer applies.

NOTE: DELTA TSMIN should seldom need to be increased more than 10 degrees above the selection program value. Likewise, DELTA TSMAX rarely requires more than a 2 degree increase.

If surge is encountered then the surge line is probably too optimistic or high. Note following parameters from ICVC at surge:

- EVAPORATOR REFRIGERANT TEMP
- EVAPORATOR PRESSURE
- CONDENSER REFRIG TEMP
- CONDENSER PRESSURE
- ACTUAL GUIDE VANE POSITION
- AVERAGE LINE CURRENT

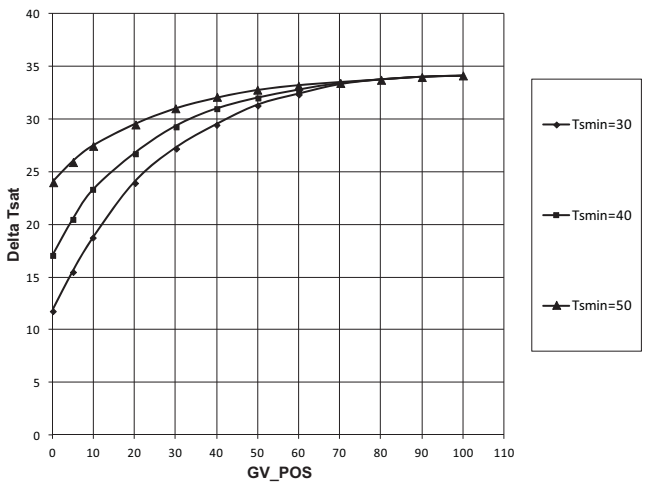

Fig. 37 — Effect of SURGE/HGBP DELTA TSMIN on Surge Prevention

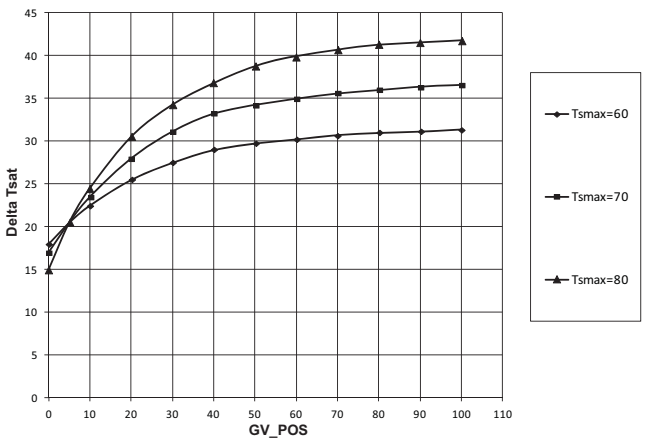

Fig. 38 — Effect of SURGE/HGBP DELTA TSMAX on Surge Prevention

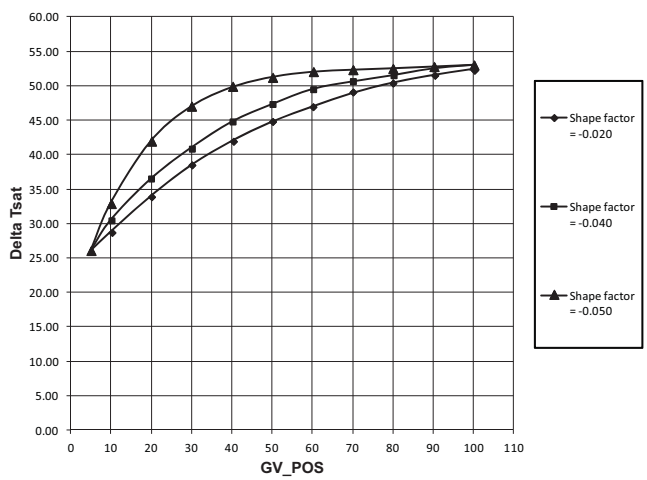

Fig. 39 — Effect of SURGE LINE SHAPE FACTOR on Surge Prevention

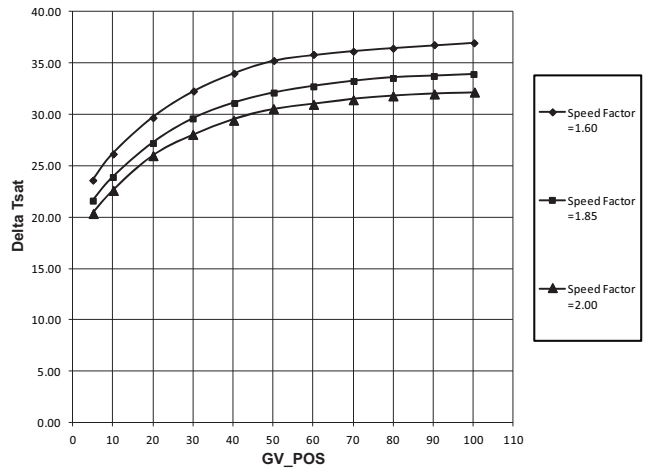

Fig. 40 — Effect of SURGE LINE SPEED FACTOR on Surge Prevention

If ACTUAL GUIDE VANE POSITION is less than 30%, go to Step 1. If ACTUAL GUIDE VANE POSITION is greater than 60%, then go to Step 3.

1. Do not change SURGE LINE SHAPE FACTOR from the value selected by Chiller Builder (ECAT). Decrease SURGE/HGBP DELTA TSMIN in 1° F steps up to 5 times. Monitor chiller for surge.
2. If ACTUAL GUIDE VANE POSITION is still less than 30 and step 1 failed, then increase the value of SURGE LINE SHAPE FACTOR in steps of 0.01 up to 2 times. For example, if surge is encountered when shape factor is –0.06, increase the SURGE LINE SHAPE FACTOR to –0.05. If this does not solve the problem, go to step 5, even if ACTUAL GUIDE VANE POSITION is less than 30%.
3. Do not change SURGE LINE SHAPE FACTOR from the value selected by Chiller Builder (ECAT). Decrease SURGE/HGBP DELTA TSMAX by 1° F Steps up to 5 times. Monitor chiller for surge.
4. If ACTUAL GUIDE VANE POSITION is greater than 60% and Step 4 failed to eliminate surge, then set SURGE/HGBP DELTA TSMAX to 5° F below the value specified by Chiller Builder (ECAT). Increase the value of the SURGE LINE SHAPE FACTOR in steps of 0.01 up to 2 times. For example, if surge is encountered when the SURGE LINE SHAPE FACTOR is –0.06, increase the SURGE LINE SHAPE FACTOR to –0.05. If this does not solve the problem, go to Step 5, even if ACTUAL GUIDE VANE POSITION is greater than 60%.
5. If ACTUAL GUIDE VANE POSITION is greater than 30% but less than 60% or if Step 2 failed (with ACTUAL GUIDE VANE POSITION less than 30) or if Step 4 failed (with ACTUAL GUIDE VANE POSITION greater than 60), then perform this step. Do not change SURGE LINE SHAPE FACTOR from the value specified by Chiller Builder (ECAT). Reset SURGE/HGBP DELTA TSMIN and SURGE/HGBP DELTA TSMAX to the value specified by Chiller Builder (ECAT). Decrease SURGE/HGBP DELTA TSMIN and SURGE/HGBP DELTA TSMAX in steps of 1° F up to 5 times. Monitor chiller for surge.

CONFIGURE DIFFUSER CONTROL IF NECESSARY — If the compressor is equipped with a variable diffuser, (size 4 or 5 compressor) access the VDO_SRD screen. Scroll to *DIFFUSER CONTROL* and press the ENABLE softkey. Compare the diffuser and guide vane values (*GUIDE VANE 25% LOAD PT, GUIDE VANE 50%*

LOAD PT, GUIDE VANE 75% LOAD PT, DIFFUSER 25% LOAD POINT, DIFFUSER 50% LOAD POINT, DIFFUSER 75% LOAD POINT) to the values located on the label inside the control panel above the ICVC. See Fig. 13.

Compressors with variable diffuser control have actuators tested and stamped with the milliamp (mA) value that results in 100% actuator rotation. In addition to the diffuser position schedule, the DIFFUSER FULL SPAN mA of the split ring diffuser actuator must be entered in the SETUP2 screen. This information is printed on a label affixed under the solid-state controller box on the right side of the split ring diffuser actuator when viewing the compressor from the suction end.

Units with VFD — On units with VFD further adjustments can be made if response to surge prevention or protection is not functioning as desired. *VFD GAIN* and *VFD INCREASE STEP* can be adjusted to allow for more aggressive changes in speed when surge prevention or protection is active.

MODIFY EQUIPMENT CONFIGURATION IF NECESSARY — The EQUIPMENT SERVICE table has screens to select, view, or modify parameters. Carrier's certified drawings have the configuration values required for the jobsite. Modify these values only if requested.

EQUIPMENT SERVICE Screen Modifications — Change the values on these screens according to specific job data. See the certified drawings for the correct values. Modifications can include:

- Chilled water reset
- Entering chilled water control (Enable/Disable)
- 4 to 20 mA demand limit
- Auto restart option (Enable/Disable)
- Remote contact option (Enable/Disable)

See PIC II System Functions (page 42) for description of these functions.

Owner-Modified CCN Tables — The following EQUIPMENT CONFIGURATION screens are described for reference only.

OCCDEFCS — The OCCDEFCS screen contains the Local and CCN time schedules, which can be modified here or on the SCHEDULE screen as described previously.

HOLIDAYS — From the HOLIDAYS screen, the days of the year that holidays are in effect can be configured. See the holiday paragraphs in the Controls section for more details.

BRODEF — The BRODEF screen defines the start and end of daylight savings time. By default this feature is enabled. Enter the dates for the start and end of daylight savings if required for your location. Note that for Day of Week, 1 represents Monday. Start Week and Stop Week refer to the instance of the selected Day of Week during the selected month and year. To disable the feature, change START ADVANCE and STOP BACK times to 0 (minutes). In the BRODEF table the user may also identify a chiller as the time broadcaster for a CCN network. There should be only one device on a CCN network which is designated as the Time Broadcaster.

ALARM ROUTING — This is in the table SERVICE–> EQUIPMENT CONFIGURATION–>NET_OPT under the heading Alarm Configuration. ALARM ROUTING consists of an 8-bit binary number. Only bits 1, 2, and 4 (counting from the left, first) are used. The others do not matter. The bits can be set by any device which can access and change configuration tables. If any of these 3 bits is set to 1, the controller (ICVC, for example) will broadcast any alarms which occur.

- first bit = 1 indicates that the alarm should be read and processed by a "front end" device, such as a ComfortWORKS® device.
- second bit = 1 indicates that the alarm should be read and processed by a TeLINK™ or Autodial Gateway module.
- fourth bit = 1 indicates that the alarm should be read and processed by an alarm printer interface (an optional module) or ServiceLink™ modules.

The RE-ALARM time is a time period after which, if a preexisting and previously broadcast alarm has not been cleared, it will be rebroadcast on the CCN network. See Fig. 41.

Other Tables — The CONSUME, NET_OPT, and RUNTIME screens contain parameters used with a CCN system. See the applicable CCN manual for more information on these screens. These tables can only be defined from a CCN Building Supervisor.

ALARM CONTROL
ALARM ROUTING

This decision determines which CCN system elements will receive and process alarms sent by the CSM. Input for the decision consists of eight digits, each of which can be set to either *0* or *1*. Setting a digit to *1* specifies that alarms will be sent to the system element that corresponds to that digit. Setting all digits to 0 disables alarm processing. Digits in this decision correspond to CCN system elements in the following manner:

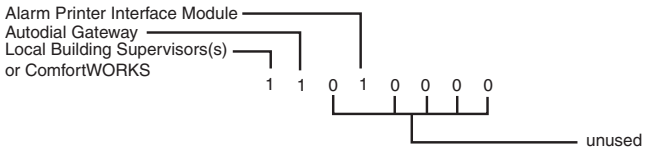

NOTE: If your CCN does not contain ComfortWORKS® controls or a Building Supervisor, Autodial Gateway, or APIM to serve as an alarm acknowledger, set all digits in this decision to *0* in order to prevent unnecessary activity on the CCN Communication Bus.

Allowable Entries	00000000 to 11111111 0 = Disabled, 1 = Enabled
Default Value	10000000

Fig. 41 — Alarm Control and Alarm Routing

Perform a Control Test — Check the safety controls status by performing an automated control test. Press the STOP button on the ICVC to place the chiller in STOP mode. The CONTROL TEST screen can only be accessed when the chiller is in STOP mode. Access the CONTROL TEST table and select a test to be performed function (Table 15).

The Automated Control Test checks all outputs and inputs for function. In order to successfully proceed with the controls test, the compressor should be off, no alarms showing, and voltage should be within ±10% of rating plate value. The compressor can be put in OFF mode by pressing the STOP pushbutton on the ICVC. Each test asks the operator to confirm the operation is occurring and whether or not to continue. If an error occurs, the operator can try to address the problem as the test is being done or note the problem and proceed to the next test.

Table 15 — Control Test Menu Functions

TESTS TO BE PERFORMED	DEVICES TESTED
1. CCM Thermistors	Entering Chilled Water Leaving Chilled Water Entering Condenser Water Leaving Condenser Water Evap Refrig Liquid Temp Comp Discharge Temp Comp Thrust Brg Temp Oil Sump Temp Comp Motor Winding Temp Spare Temperature 1 Spare Temperature 2 Remote Reset Sensor
2. CCM Pressure Transducers	Evaporator Pressure Condenser Pressure Oil Pump Delta P SRD Delta P SRD Rotating Stall Chiled Water Delta P Condenser Water Delta P Transducer Voltage Ref
3. Pumps	Oil Pump — Confirm Delta P Chilled Water — Confirm flow and Delta P Condenser Water — Confirm flow and Delta P
4. Discrete Outputs	Oil Heater Relay Hot Gas Bypass Relay Tower Fan Relay Low Tower Fan Relay High Alarm Relay Shunt Trip Relay
5. IGV and SRD Actuator	Open/Close Guide vanes and diffuser will both move. The relative movement during Control Test does not apply to operation. During operation, guide vane and diffuser are controlled independently. Earlier software versions: If present, split ring diffuser will operate in coordination with the guide vanes per configured schedule.
6. Head Pressure Output	Increase/Decrease 4-20 mA output
7. Diffuser Actuator	Open/Close (independent of guide vanes)
8. Pumpdown Lockout	When using pumpdown/lockout, observe freeze up precautions when removing charge: Instructs operator which valves to close and when. Starts chilled water and condenser water pumps and confirms flows. Monitors Evaporator pressure Condenser pressure Evaporator temperature during pumpout procedures Turns pumps off after pumpdown. Locks out compressor.
9. Terminate Lockout	Starts pumps and monitors flows. Instructs operator which valves to open and when. Monitors Evaporator pressure Condenser pressure Evaporator temperature during charging process Terminates compressor lockout.
10. Guide Vane Calibration	Automatic, displays guide vane position signal voltage. This test is required before first start-up with new actuator, new controller, or new software. Calibrates guide vane input on CCM.

LEGEND

CCM — Chiller Control Module
IGV — Inlet Guide Vane
SRD — Spilt Ring Diffuser

NOTE: During any of the tests, an out-of-range reading will have an asterisk (*) next to the reading and a message will be displayed if the diffuser control is enabled.

GUIDE VANE ACTUATOR CALIBRATION — This automated procedure is performed at the factory prior to new chiller shipment. During this test, the CCM outputs a discrete 24-v signal from terminal J11 to fully open and fully close the guide vanes. A 0.1 to 3.0 V nominal signal is fed back to the terminals J4-9 and J4-10 to indicate the position of the guide vanes to the CCM. This calibration will need to be repeated if the guide vane actuator or ICVC controller is replaced, or if new controller software is downloaded. A prestart alert message will remind the user prior to the next start-up if this has not been done.

Select the last item in the Controls Test menu. Press YES to proceed with calibration per the prompt. The guide vanes will close fully, then open to 100% (regardless of the position configured at maximum opening). The system will store voltages corresponding to 0% and 100%, then indicate the the calibration is complete.

NOTE: Enter guide vane calibration to calibrate guide input on CCM (Plug J4 upper terminal 9 and 10).

NOTE: If during the control test the guide vanes do not open, verify the low pressure alarm is not active. (An active low pressure alarm causes the guide vanes to close.)

NOTE: The oil pump test will not energize the oil pump if cooler pressure is below –5 psig (–35 kPa).

When the control test is finished or the EXIT softkey is pressed, the test stops, and the CONTROL TEST menu displays. If a specific automated test procedure is not completed, access the particular control test to test the function when ready. The CONTROL TEST menu is described in the Table 15.

COOLER AND CONDENSER PRESSURE TRANSDUCER AND WATERSIDE FLOW DEVICE CALIBRATION (waterside device optional with CCM inputs available) — Calibration can be checked by comparing the pressure readings from the transducer to an accurate refrigeration gage reading. These readings can be viewed or calibrated from the HEAT_EX screen on the CCM. The transducer can be checked and calibrated at 2 pressure points. These calibration points are 0 psig (0 kPa) and between 25 and 250 psig (173 and 1724 kPa). Wiring is shown in Fig. 42. To calibrate these transducers:

1. Shut down the compressor and the cooler and condenser pumps.

   NOTE: There should be no flow through the heat exchangers.

2. Disconnect the transducer in question from its Schrader fitting for cooler or condenser transducer calibration. For oil pressure or flow device calibration keep transducer in place.

   NOTE: If the cooler or condenser vessels are at 0 psig (0 kPa) or are open to atmospheric pressure, the transducers can be calibrated for zero without removing the transducer from the vessel.

3. Access the HEAT_EX screen and view the particular transducer reading (the *EVAPORATOR PRESSURE* or *CONDENSER PRESSURE* parameter on the HEAT_EX screen). To calibrate oil pressure or waterside flow device, view the particular reading (*CHILLED WATER DELTA P* and *CONDENSER WATER DELTA P* on the HEAT_EX screen and *OIL PUMP DELTA P* on the COMPRESS screen). It should read 0 psi (0 kPa). If the reading is not 0 psi (0 kPa), but within ±5 psi (35 kPa), the value may be set to zero by pressing the SELECT softkey while the appropriate transducer parameter is highlighted on the ICVC screen. Then press the ENTER softkey. The value will now go to zero. No high end calibration is necessary for *OIL PUMP DELTA P* or flow devices.

If the transducer value is not within the calibration range, the transducer will return to the original reading. If the pressure is within the allowed range (noted above), check the voltage ratio of the transducer. To obtain the voltage ratio, divide the voltage (dc) input from the transducer by the supply voltage signal (TRANSDUCER VOLTAGE REF displayed in CONTROL TEST menu in the CCM PRESSURE TRANSDUCERS screen) or measure across the positive (+ red) and negative (– black) leads of the transducer. For example, the condenser transducer voltage input is measured at CCM terminals J2-4 and J2-5. The voltage ratio must be between 0.80 and 0.11 for the software to allow calibration. Rotate the waterside flow pressure device from the inlet nozzle to the outlet nozzle and repeat this step. If rotating the waterside flow device does not allow calibration then pressurize the transducer until the ratio is within range. Then attempt calibration again.

4. A high pressure point can also be calibrated between 25 and 250 psig (172.4 and 1723.7 kPa) by attaching a regulated 250 psig (1724 kPa) maximum pressure (usually from a nitrogen cylinder). The high pressure point can be calibrated by accessing the appropriate transducer parameter on the HEAT_EX screen, highlighting the parameter, pressing the SELECT softkey, and then using the INCREASE or DECREASE softkeys to adjust the value to the exact pressure on the refrigerant gage. Press the ENTER softkey to finish the calibration. Pressures at high altitude locations must be compensated for, so the chiller temperature/pressure relationship is correct.

The PIC II does not allow calibration if the transducer is too far out of calibration. In this case, a new transducer must be installed and recalibrated.

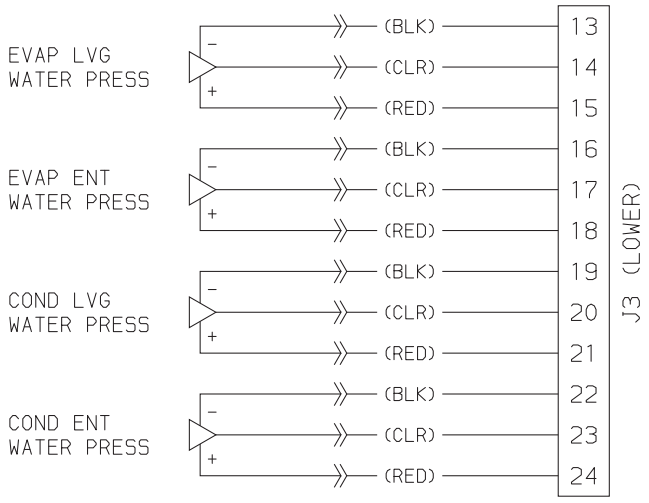

Fig. 42 — CCM Inputs for Optional Waterside Delta P Transducers

OPTIONAL THERMAL DISPERSION FLOW SWITCH CALIBRATION — Set the flow through the water circuit to the minimum safe flow that will be encountered.

Reduce the sensitivity of the switch by turning the adjustment counter-clockwise until the yellow LED turns off. This indicates that the switch is now open.

Access the HEAT_EX screen in the STATUS tables. Select the *CHILLED WATER DELTA P* or *CONDENSER WATER DELTA P*. It should read zero psi (0 kPa). If it does not, the value may be set to zero by pressing the SELECT soft key while the appropriate transducer parameter is highlighted in the HEAT_EX screen. Then press the ENTER key. The value will now go to zero. High end calibration is not necessary.

Increase the sensitivity of the flow switch by turning the adjustment potentiometer clockwise until the yellow LED is lit.

In case of nuisance trips at low flow increase the sensitivity of the switch by turning the potentiometer clockwise.

Check Optional Pumpout System Controls and Compressor — Controls include an on/off switch, a 0.5-amp fuse, the compressor overloads, an internal thermostat, a compressor contactor, and a refrigerant high pressure cutout. The high pressure cutout is factory set to open at 185 psig (1275 kPa) and reset at 140 psig (965 kPa). Ensure the water-cooled condenser has been connected. Open the compressor suction and discharge the service valves. Ensure oil is visible in the compressor sight glass. Add oil if necessary.

See the Pumpout and Refrigerant Transfer Procedures and Optional Pumpout System Maintenance sections, pages 87 and 96, for details on the transfer of refrigerant, oil specifications, etc.

High Altitude Locations — Because the chiller is initially calibrated at sea level, it is necessary to recalibrate the pressure transducers if the chiller has been moved to a high altitude location. See the calibration procedure in the Troubleshooting Guide section.

Charge Refrigerant into Chiller

⚠ CAUTION

The transfer, addition, or removal of refrigerant in spring isolated chillers may place severe stress on external piping if springs have not been blocked in both up and down directions.

⚠ CAUTION

Always operate the condenser and chilled water pumps during charging operations to prevent freeze-ups.

The standard 19XR chiller is shipped with the refrigerant already charged in the vessels. However, the 19XR may be ordered with a nitrogen holding charge of 15 psig (103 kPa). Evacuate the nitrogen from the entire chiller, and charge the chiller from refrigerant cylinders.

CHILLER EQUALIZATION WITHOUT A PUMPOUT UNIT

⚠ CAUTION

When equalizing refrigerant pressure on the 19XR chiller after service work or during the initial chiller start-up, *do not use the discharge isolation valve to equalize.* Either the motor cooling isolation valve or the charging hose (connected between the pumpout valves on top of the cooler and condenser) should be used as the equalization valve.

To equalize the pressure differential on a refrigerant isolated 19XR chiller, use the TERMINATE LOCKOUT function of the CONTROL TEST on the SERVICE menu. This helps to turn on pumps and advises the operator on proper procedures.

The following steps describe how to equalize refrigerant pressure in an isolated 19XR chiller without a pumpout unit.

1. Access terminate lockout function on the CONTROL TEST screen.
2. IMPORTANT: Turn on the chilled water and condenser water pumps to prevent freezing.

3. Slowly open the refrigerant cooling isolation valve. The chiller cooler and condenser pressures will gradually equalize. This process takes approximately 15 minutes.
4. Once the pressures have equalized, the cooler isolation valve, the condenser isolation valve, and the hot gas isolation valve may now be opened. Refer to Fig. 43 and 44 for the location of the valves.

⚠ WARNING

Whenever turning the discharge isolation valve, be sure to reattach the valve locking device. This prevents the valve from opening or closing during service work or during chiller operation.

CHILLER EQUALIZATION WITH PUMPOUT UNIT — The following steps describe how to equalize refrigerant pressure on an isolated 19XR chiller using the pumpout unit.

1. Access the terminate lockout function on the CONTROL TEST screen.
2. IMPORTANT: Turn on the chilled water and condenser water pumps to prevent freezing.
3. Open valve 4 on the pumpout unit and open valves 1a and 1b on the chiller cooler and condenser, Fig. 43 and 44. Slowly open valve 2 on the pumpout unit to equalize the pressure. This process takes approximately 15 minutes.
4. Once the pressures have equalized, the discharge isolation valve, cooler isolation valve, optional hot gas bypass isolation valve, and the refrigerant isolation valve can be opened. Close valves 1a and 1b, and all pumpout unit valves.

⚠ WARNING

Whenever turning the discharge isolation valve, be sure to reattach the valve locking device. This prevents the valve from opening or closing during service work or during chiller operation.

The full refrigerant charge on the 19XR will vary with chiller components and design conditions, as indicated on the job data specifications. An approximate charge may be determined by adding the condenser charge to the cooler charge as listed in the Heat Exchanger Data tables in the Physical Data section of this book, pages 119 to 176.

⚠ CAUTION

Always operate the condenser and chilled water pumps whenever charging, transferring, or removing refrigerant from the chiller.

Use the CONTROL TEST terminate lockout function to monitor conditions and start the pumps.

If the chiller has been shipped with a holding charge, the refrigerant is added through the pumpout charging connection (Fig. 43 and 44, valve 1b). First evacuate the nitrogen holding charge from the chiller vessels. Charge the refrigerant as a gas until the system pressure exceeds 35 psig (241 kPa) for HFC-134a. After the chiller is beyond this pressure the refrigerant should be charged as a liquid until all the recommended refrigerant charge has been added. The charging valve (Fig. 43 and 44, valve 7) can be used to charge liquid to the cooler if the cooler isolation valve (11) is present and is closed. Do not charge liquid through the linear float to the condenser.

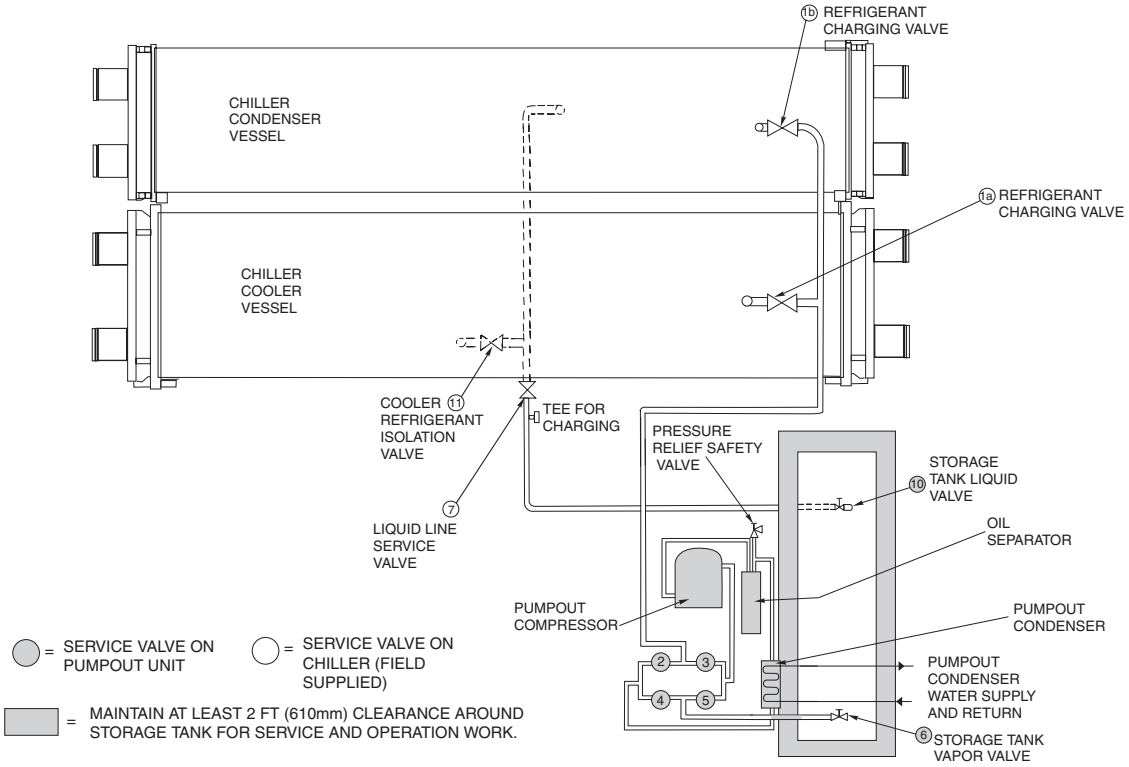

Fig. 43 — Typical Optional Pumpout System Piping Schematic with Storage Tank

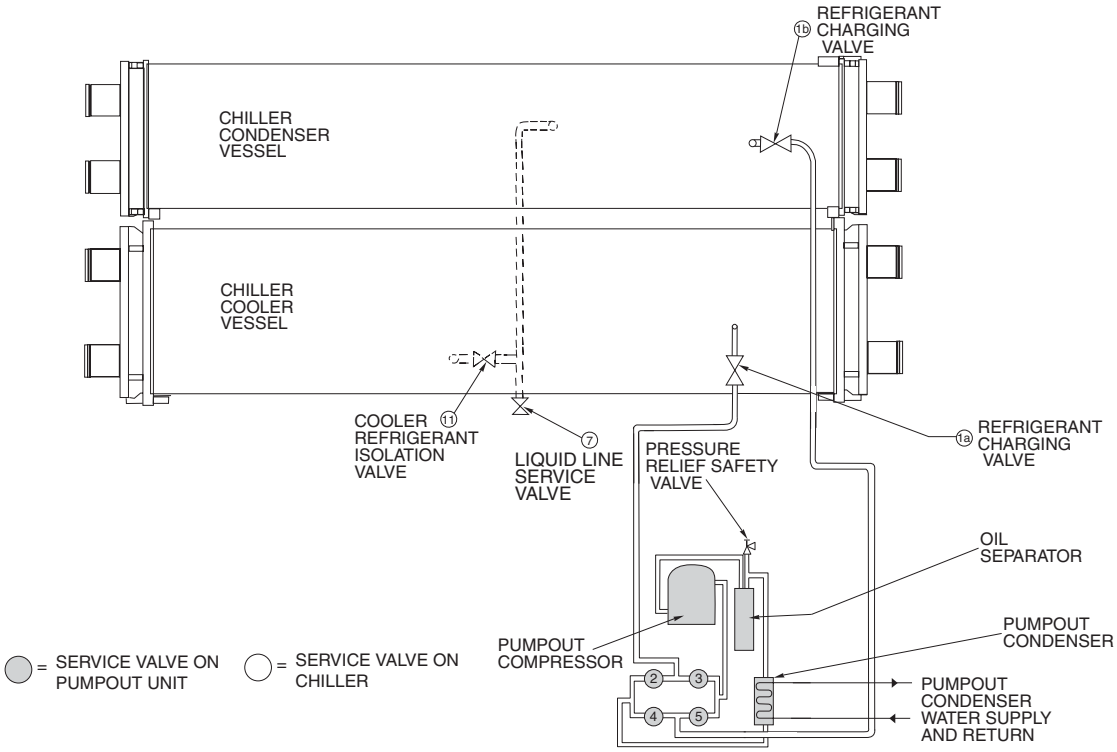

Fig. 44 — Typical Optional Pumpout System Piping Schematic without Storage Tank

TRIMMING REFRIGERANT CHARGE — The 19XR chiller is shipped with the correct charge for the design duty of the chiller. Trimming the charge can best be accomplished when the design load is available. To trim the charge, check the temperature difference between the leaving chilled water temperature and cooler refrigerant temperature at full load design conditions. If necessary, add or remove refrigerant to bring the temperature difference to design conditions or minimum differential.

The 19XR chiller refrigerant charges for each cooler and condenser code are listed in the Heat Exchanger Data tables in the Physical Data section of this book, pages 119 to 176. Total refrigerant charge is the sum of the cooler and condenser charge.

INITIAL START-UP

Preparation — Before starting the chiller, verify:

1. Power is on to the main starter, oil pump relay, tower fan starter, oil heater relay, and the chiller control panel.
2. Cooling tower water is at proper level and at-or-below design entering temperature.
3. Chiller is charged with refrigerant and all refrigerant and oil valves are in their proper operating positions.
4. Oil is at the proper level in the reservoir sight glasses.
5. Oil reservoir temperature is above 140 F (60 C) or above CALC EVAP SAT TEMP plus 50° F (28° C).
6. Valves in the evaporator and condenser water circuits are open.

   NOTE: If the pumps are not automatic, ensure water is circulating properly.

⚠ CAUTION

Do not permit water or brine that is warmer than 110 F (43 C) to flow through the cooler or condenser. Refrigerant overpressure may discharge through the relief valves and result in the loss of refrigerant charge.

7. Access the CONTROL TEST screen. Scroll down on the *TERMINATE LOCKOUT* option. Press the SELECT (to enable the chiller to start) and answer YES to reset unit to operating mode. The chiller is locked out at the factory in order to prevent accidental start-up.

Dry Run to Test Start-Up Sequence

For unit-mounted Rockwell VFDs.

1. Disengage the main motor disconnect on the VFD front panel. This should only disconnect the motor power. Power to the controls, oil pump, and starter control circuit should still be energized. Open the VFD enclosure, move the VFD Test/Run switch into the "TEST" position. Close the VFD enclosure and engage the main VFD disconnect.
2. Observe the default screen on the ICVC: the status message in the upper left-hand corner reads, "Manually Stopped," Press the CCN or LOCAL softkey to start. If the chiller controls do not go into a start mode ("Unoccupied Mode" is displayed) go to the SCHEDULE screen and override the schedule or change the occupied time. Press the LOCAL softkey to begin the start-up sequences.
3. View the STARTUP display screen and verify the chilled water and condenser water pumps have energized.

4. Verify the oil pump has started and is pressurizing the lubrication system. After the oil pump has run about 11 seconds, the starter energizes (*COMPRESSOR START CONTACT* is closed) and goes through its start-up sequence.
5. The PIC II eventually shows an alarm for motors amps not sensed. Reset this alarm and continue with the initial start-up.
6. Disengage the main VFD disconnect. Open the VFD enclosure, move the VFD Test/Run switch into the "RUN" position. Close the VFD enclosure and engage the main VFD disconnect.

Check Motor Rotation

1. Disengage the main VFD disconnect. Open the VFD enclosure and engage the control power circuit breaker.
2. Then engage the oil pump circuit breaker located in the same section of the starter cabinet. Close the VFD enclosure door.
3. Finally, close the main disconnect on the front of the VFD enclosure.
4. The ISM mounted in the VFD enclosure checks for proper phase rotation as soon as power is applied to the starter and the PIC II controls power up.
5. An alarm message will appear on the ICVC if the phase rotation is incorrect. If this occurs reverse any 2 of the 3 incoming power leads to the starter and reapply power. The motor is now ready for a rotation check.
6. After the default screen status message states 'Ready to Start' press the LOCAL softkey. The PIC II control performs start-up checks.
7. When the starter is energized and the motor begins to turn, check for clockwise motor rotation (Fig. 45).

IMPORTANT: Do not check motor rotation during coast-down. Rotation may have reversed during equalization of vessel pressures.

Check Oil Pressure and Compressor Stop

1. When the motor is at full speed, note the differential oil pressure reading on the ICVC default screen. It should be between 18 and 40 psid (124 to 206 kPad).
2. Press the Stop button and listen for any unusual sounds from the compressor as it coasts to a stop.

CORRECT MOTOR ROTATION IS CLOCKWISE WHEN VIEWED THROUGH MOTOR SIGHT GLASS

TO CHECK ROTATION, ENERGIZE COMPRESSOR MOTOR MOMENTARILY.
DO NOT LET MACHINE DEVELOP CONDENSER PRESSURE.
CHECK ROTATION IMMEDIATELY.

ALLOWING CONDENSER PRESSURE TO BUILD OR CHECKING ROTATION WHILE MACHINE COASTS DOWN MAY GIVE A FALSE INDICATION DUE TO GAS PRESSURE EQUALIZING THROUGH COMPRESSOR.

Fig. 45 — Correct Motor Rotation

To Prevent Accidental Start-Up — A chiller STOP override setting may be entered to prevent accidental start-up during service or whenever necessary. Access the MAINSTAT screen and using the NEXT or PREVIOUS softkeys, highlight the *CHILLER START/STOP* parameter. Override the current START value by pressing the SELECT softkey. Press the STOP softkey followed by the ENTER softkey. The word SUPVSR! displays on the ICVC indicating the override is in place.

To restart the chiller the STOP override setting must be removed. Access the MAINSTAT screen and using NEXT or PREVIOUS softkeys highlight *CHILLER START/STOP*. The 3 softkeys that appear represent 3 choices:

- START — forces the chiller ON
- STOP — forces the chiller OFF
- RELEASE — puts the chiller under remote or schedule control.

To return the chiller to normal control, press the RELEASE softkey followed by the ENTER softkey. For more information, see Local Start-Up, page 63.

The default ICVC screen message line indicates which command is in effect.

Check Chiller Operating Condition — Check to be sure that chiller temperatures, pressures, water flows, and oil and refrigerant levels indicate the system is functioning properly.

Instruct the Customer Operator — Ensure the operator(s) understand all operating and maintenance procedures. Point out the various chiller parts and explain their function as part of the complete system.

COOLER-CONDENSER — Float chamber, relief valves, refrigerant charging valve, temperature sensor locations, pressure transducer locations, Schrader fittings, waterboxes and tubes, and vents and drains.

OPTIONAL PUMPOUT STORAGE TANK AND PUMPOUT SYSTEM — Transfer valves and pumpout system, refrigerant charging and pumpdown procedure, and relief devices.

MOTOR COMPRESSOR ASSEMBLY — Guide vane actuator, transmission, motor cooling system, oil cooling system, temperature and pressure sensors, oil sight glasses, integral oil pump, isolatable oil filter, extra oil and motor temperature sensors, synthetic oil, and compressor serviceability.

MOTOR COMPRESSOR LUBRICATION SYSTEM — Oil pump, cooler filter, oil heater, oil charge and specification, operating and shutdown oil level, temperature and pressure, and oil charging connections.

CONTROL SYSTEM — CCN and LOCAL start, reset, menu, softkey functions, ICVC operation, occupancy schedule, set points, safety controls, and auxiliary and optional controls.

AUXILIARY EQUIPMENT — Starters and disconnects, separate electrical sources, pumps, and cooling tower.

DESCRIBE CHILLER CYCLES — Refrigerant, motor cooling, lubrication, and oil reclaim.

REVIEW MAINTENANCE — Scheduled, routine, and extended shutdowns, importance of a log sheet, importance of water treatment and tube cleaning, and importance of maintaining a leak-free chiller.

SAFETY DEVICES AND PROCEDURES — Electrical disconnects, relief device inspection, and handling refrigerant.

CHECK OPERATOR KNOWLEDGE — Start, stop, and shutdown procedures, safety and operating controls, refrigerant and oil charging, and job safety.

REVIEW THE START-UP OPERATION, AND MAINTENANCE MANUAL.

OPERATING INSTRUCTIONS

Operator Duties

1. Become familiar with the chiller and related equipment before operating the chiller.
2. Prepare the system for start-up, start and stop the chiller, and place the system in a shutdown condition.
3. Maintain a log of operating conditions and document any abnormal readings.
4. Inspect the equipment, make routine adjustments, and perform a Control Test. Maintain the proper oil and refrigerant levels.
5. Protect the system from damage during shutdown periods.
6. Maintain the set point, time schedules, and other PIC functions.

Prepare the Chiller for Start-Up — Follow the steps described in the Initial Start-Up section, page 84.

To Start the Chiller

1. Start the water pumps, if they are not automatic.
2. On the ICVC default screen, press the LOCAL or CCN softkey to start the system. If the chiller is in the OCCUPIED mode and the start timers have expired, the start sequence will start. Follow the procedure described in the Start-Up/Shutdown/Recycle Sequence section, page 63.

Check the Running System — After the compressor starts, the operator should monitor the ICVC display and observe the parameters for normal operating conditions:

1. The oil reservoir temperature should be above 120 F (49 C) during shutdown.
2. The bearing oil temperature accessed on the COMPRESS table should be 120 to 165 F (49 to 74 C) for compressors with rolling element bearings. If the bearing temperature reads more than 180 F (83 C) with the oil pump running, stop the chiller and determine the cause of the high temperature. *Do not restart* the chiller until corrected.
3. The oil level should be visible anywhere in one of the two sight glasses. Foaming oil is acceptable as long as the oil pressure and temperature are within limits.
4. The oil pressure should be between 18 and 40 psid (124 to 207 kPad) differential, as seen on the ICVC default screen. Typically the reading will be 18 to 35 psid (124 to 241 kPad) at initial start-up.
5. The moisture indicator sight glass on the refrigerant motor cooling line should indicate refrigerant flow and a dry condition.
6. The condenser pressure and temperature varies with the chiller design conditions. Typically the pressure will range between 60 and 135 psig (390 to 950 kPa) with a corresponding temperature range of 60 to 105 F (15 to 41 C). The condenser entering water temperature should be controlled below the specified design entering water temperature to save on compressor kilowatt requirements.
7. Cooler pressure and temperature also will vary with the design conditions. Typical pressure range will be between 29.5 and 40.1 psig (203.4 and 276.4 kPa), with temperature ranging between 34 and 45 F (1.1 and 7.2 C).
8. The compressor may operate at full capacity for a short time after the pulldown ramping has ended, even though the building load is small. The active electrical demand setting can be overridden to limit the compressor IkW, or the pulldown rate can be decreased to avoid a high demand charge for the short period of high demand operation. Pulldown rate can be based on load rate or temperature rate and is accessed on the EQUIPMENT SERVICE screen, RAMP_DEM table (Table 3, Example 23).
9. The economizer (if installed) has two sight glasses that look into the float chamber. When the chiller is operating, the top sight glass is empty and the bottom sight glass is full.

To Stop the Chiller

1. The occupancy schedule starts and stops the chiller automatically once the time schedule is configured.
2. By pressing the STOP button for one second, the alarm light blinks once to confirm the button has been pressed. The compressor will then follow the normal shutdown sequence as described in the Shutdown Sequence, Start-Up/Shutdown/Recycle Sequence section, page 63. The chiller will not restart until the CCN or LOCAL softkey is pressed. The chiller is now in the OFF control mode.

> IMPORTANT: Do not attempt to stop the chiller by opening an isolating knife switch. High intensity arcing may occur.

If the chiller is stopped by an alarm condition, do not *restart the chiller* until the problem is diagnosed and corrected.

After Limited Shutdown — No special preparations should be necessary. Follow the regular preliminary checks and starting procedures.

Preparation for Extended Shutdown — The refrigerant should be transferred into the pumpout storage tank (if supplied; see Pumpout and Refrigerant Transfer Procedures) to reduce chiller pressure and the possibility of leaks. Maintain a holding charge of 5 to 10 lb (2.27 to 4.5 kg) of refrigerant or nitrogen to prevent air from leaking into the chiller.

If freezing temperatures are likely to occur in the chiller area, drain the chilled water, condenser water, and the pumpout condenser water circuits to avoid freeze-up. Keep the waterbox drains open. It is recommended not to store the refrigerant in the unit if below freezing temperatures are anticipated. A nitrogen holding charge is recommended in this case.

Leave the oil charge in the chiller with the oil heater and controls energized to maintain the minimum oil reservoir temperature.

After Extended Shutdown — Ensure the water system drains are closed. It may be advisable to flush the water circuits to remove any soft rust which may have formed. This is a good time to brush the tubes and inspect the Schrader fittings on the waterside flow devices for fouling, if necessary.

Check the cooler pressure on the ICVC default screen and compare it to the original holding charge that was left in the chiller. If (after adjusting for ambient temperature changes) any loss in pressure is indicated, check for refrigerant leaks. See Check Chiller Tightness section, page 66.

Recharge the chiller by transferring refrigerant from the pumpout storage tank (if supplied). Follow the Pumpout and Refrigerant Transfer Procedures section, below. Observe freeze-up precautions.

Carefully make all regular preliminary and running system checks. Perform a Control Test before start-up. If the compressor oil level appears abnormally high, the oil may have absorbed refrigerant. Ensure that the oil temperature is above 140 F (60 C) or above the CALC EVAP SAT TEMP plus 50° F (27° C).

Cold Weather Operation — When the entering condenser water temperature drops very low, the operator should automatically cycle the cooling tower fans off to keep the tem-

perature up. Piping may also be arranged to bypass the cooling tower. The PIC II controls have a low limit tower fan output that can be used to assist in this control (terminal J9-11 and J9-12 on ISM).

Manual Guide Vane Operation — It is possible to manually operate the guide vanes in order to check control operation or to control the guide vanes in an emergency. Manual operation is possible by overriding the target guide vane position. Access the COMPRESS screen on the ICVC and scroll down to highlight *TARGET GUIDE VANE POS*. To control the position, use the INCREASE or DECREASE softkey to adjust to the percentage of guide vane opening that is desired. Zero percent is fully closed; 100% is fully open. To release the guide vanes to automatic control, press the RELEASE softkey.

NOTE: Manual control overrides the configured pulldown rate during start-up and permits the guide vanes to open at a faster rate. Motor current above the electrical demand setting, capacity overrides, and chilled water temperature below the control point override the manual target and close the guide vanes. For descriptions of capacity overrides and set points, see the Controls section.

Refrigeration Log — A refrigeration log (as shown in Fig. 46), is a convenient checklist for routine inspection and maintenance and provides a continuous record of chiller performance. It is also an aid when scheduling routine maintenance and diagnosing chiller problems.

Keep a record of the chiller pressures, temperatures, and liquid levels on a sheet similar to the one in Fig. 46. Automatic recording of PIC II data is possible by using CCN devices such as the Data Collection module and a Building Supervisor. Contact a Carrier representative for more information.

PUMPOUT AND REFRIGERANT TRANSFER PROCEDURES

Preparation — The 19XR chiller may come equipped with an optional pumpout storage tank, pumpout system, or pumpout compressor. The refrigerant can be pumped for service work to either the chiller compressor vessel or chiller condenser vessel by using the optional pumpout system. If a pumpout storage tank is supplied, the refrigerant can be isolated in the storage tank. The following procedures describe how to transfer refrigerant from vessel to vessel and perform chiller evacuation.

⚠ CAUTION

The power to the pumpout compressor oil heater must be on whenever any valve connecting the pumpout compressor to the chiller or storage tank is open. Leaving the heater off will result in oil dilution by refrigerant and can lead to compressor failure.

If the compressor is found with the heater off and a valve open the heater must be on for at least 4 hours to drive the refrigerant from the oil. When heating the oil the compressor suction must be open to a vessel to give the refrigerant a means to leave the compressor.

⚠ CAUTION

Always run the chiller cooler and condenser water pumps and always charge or transfer refrigerant as a gas when the chiller pressure is less than 35 psig (241 kPa). Below these pressures, liquid refrigerant flashes into gas, resulting in extremely low temperatures in the cooler/condenser tubes and possibly causing tube freeze-up.

DATE _____

REFRIGERATION LOG CARRIER 19XR HERMETIC CENTRIFUGAL REFRIGERATION MACHINE

Plant _____ MACHINE MODEL NO. _____ MACHINE SERIAL NO. _____ REFRIGERANT TYPE _____

DATE _____	COOLER							CONDENSER							COMPRESSOR						
TIME	Refrigerant		Water					Refrigerant		Water					BEARING TEMP	Oil			Motor	OPER-ATOR INITIALS	REMARKS
			Pressure			Temp				Pressure			Temp						FLA _____		
	Press.	Temp	In	Out	GPM	In	Out	Press.	Temp	In	Out	GPM	In	Out		Press. Diff.	Temp (reser-voir)	Level	Amperage (or vane position)		

REMARKS: Indicate shutdowns on safety controls, repairs made and oil or refrigerant added or removed. Include amounts.

Fig. 46 — Refrigeration Log

⚠ DANGER

During transfer of refrigerant into and out of the optional storage tank, carefully monitor the storage tank level gage. Do not fill the tank more than 90% of capacity to allow for refrigerant expansion. Overfilling may result in damage to the tank or the release of refrigerant which will result in personal injury or death.

⚠ CAUTION

Do not mix refrigerants from chillers that use different compressor oils. Compressor damage can result.

Operating the Optional Pumpout Unit (Fig. 47) — Oil should be visible in the pumpout unit compressor sight glass under all operating conditions and during shutdown. If oil is low, add oil as described under Optional Pumpout System Maintenance section, page 96. The pumpout unit control wiring schematic is detailed in Fig. 48.

TO READ REFRIGERANT PRESSURES (during pumpout or leak testing):

1. The ICVC display on the chiller control panel is suitable for determining refrigerant-side pressures and low (soft) vacuum. To assure the desired range and accuracy when measuring evacuation and dehydration, use a quality vacuum indicator or manometer. This can be placed on the Schrader connections on each vessel (Fig. 2 and 3) by removing the pressure transducer.
2. To determine pumpout storage tank pressure, a 30 in. Hg vacuum -0-400 psi (-101-0-2769 kPa) gage is attached to the storage tank.
3. Refer to Fig. 43 and 44 for valve locations and numbers.

⚠ CAUTION

Transfer, addition, or removal of refrigerant in spring-isolated chillers may place severe stress on external piping if springs have not been blocked in both up and down directions.

POSITIVE PRESSURE CHILLERS WITH STORAGE TANKS — In the Valve/Condition tables that accompany these instructions, the letter "C" indicates a closed valve. Figures 43 and 44 show the locations of the valves.

⚠ CAUTION

Always run chiller cooler and condenser water pumps and always charge or transfer refrigerant as a gas when chiller vessel pressure is less than 35 psig (241 kPa). Below these pressures, liquid refrigerant flashes into gas, resulting in extremely low temperatures in the cooler/condenser tubes and possibly causing tube freeze-up.

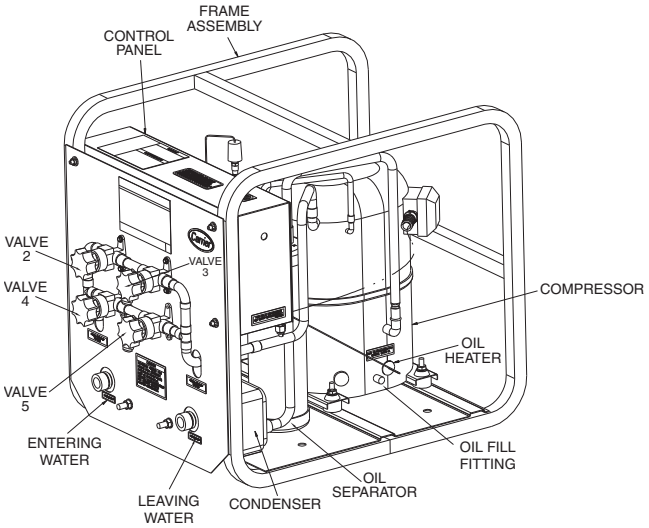

Fig. 47 — Pumpout Unit

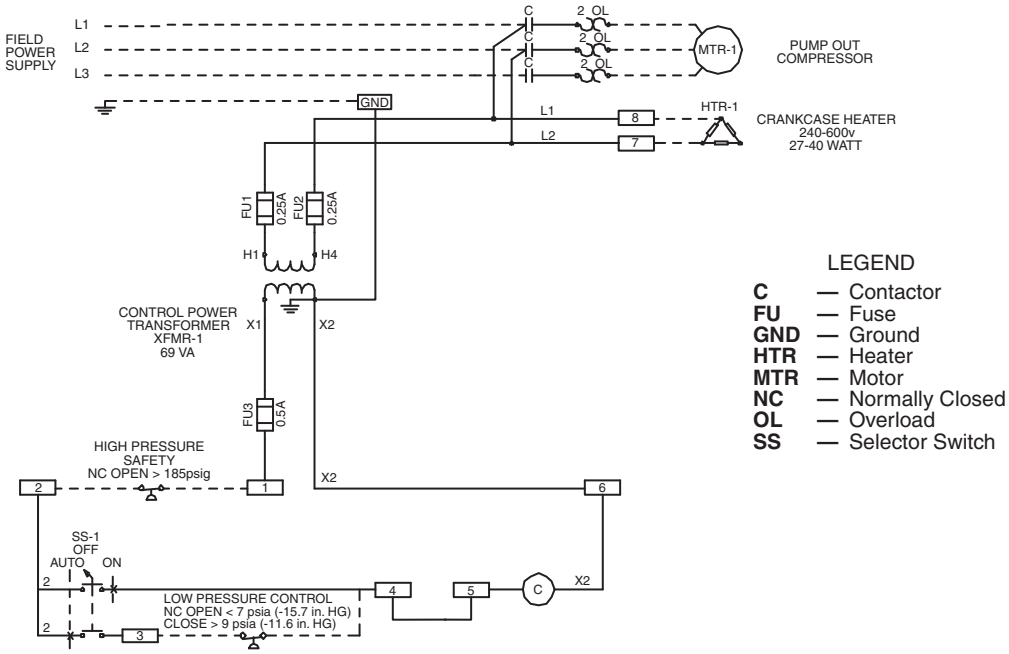

Fig. 48 — Pumpout Unit Wiring Schematic

Transfer Refrigerant from Pumpout Storage Tank to Chiller

⚠ WARNING

During transfer of refrigerant into and out of the 19XR,XRV storage tank, carefully monitor the storage tank level gage. Do not fill the tank more than 90% of capacity to allow for refrigerant expansion. Overfilling may result in damage to the tank and personal injury.

1. Equalize refrigerant pressure.
   a. Turn on chiller water pumps and monitor chiller pressures.
   b. Close pumpout and storage tank valves 2, 4, 5, and 10, and close refrigerant charging valve 7; open chiller isolation valve 11 and any other chiller isolation valves, if present.
   c. Open pumpout and storage tank valves 3 and 6; open chiller valves 1a and 1b.

VALVE	1a	1b	2	3	4	5	6	7	10	11
CONDITION			C		C	C		C	C	

   d. Gradually crack open valve 5 to increase chiller pressure to 35 psig (241 kPa). Slowly feed refrigerant to prevent freeze-up.
   e. Open valve 5 fully after the chiller pressure rises above the freezing point of the refrigerant. Let the storage tank and chiller pressure equalize. Open refrigerant charging valve 7 and storage tank charging valve 10 to let liquid refrigerant drain into the chiller.

VALVE	1a	1b	2	3	4	5	6	7	10	11
CONDITION			C		C					

2. Transfer remaining refrigerant.
   a. Close valve 5 and open valve 4. Turn off the pumpout condenser water, and turn on the pumpout compressor in manual mode to push liquid refrigerant out of the storage tank. Monitor the storage tank level until the tank is empty.
   b. Close refrigerant charging valves 7 and 10.
   c. Turn off the pumpout compressor.
   d. Turn off the chiller water pumps.
   e. Close valves 3 and 4.
   f. Open valves 2 and 5.

VALVE	1a	1b	2	3	4	5	6	7	10	11
CONDITION				C	C			C	C	

   g. Turn on pumpout condenser water.
   h. Run the pumpout compressor in manual mode until the storage tank pressure reaches 5 psig (34 kPa), 18 in. Hg vacuum (41 kPa absolute).
   i. Turn off the pumpout compressor.
   j. Close valves 1a, 1b, 2, 5, and 6.

VALVE	1a	1b	2	3	4	5	6	7	10	11
CONDITION	C	C	C	C	C	C	C	C	C	

   k. Turn off pumpout condenser water.

Transfer the Refrigerant from Chiller to Pumpout Storage Tank

1. Equalize refrigerant pressure.
   a. Valve positions:

VALVE	1a	1b	2	3	4	5	6	7	10	11
CONDITION			C		C	C		C	C	

   b. Slowly open valve 5 and refrigerant charging valves 7 and 10 to allow liquid refrigerant to drain by gravity into the storage tank.

VALVE	1a	1b	2	3	4	5	6	7	10	11
CONDITION			C		C					

2. Transfer the remaining liquid.
   a. Turn off pumpout condenser water. Place valves in the following positions:

VALVE	1a	1b	2	3	4	5	6	7	10	11
CONDITION				C	C					

   b. Run the pumpout compressor in automatic mode until vacuum switch is satisfied and compressor stops. Close valves 7 and 10.

VALVE	1a	1b	2	3	4	5	6	7	10	11
CONDITION				C	C			C	C	

   c. Turn off the pumpout compressor.
3. Remove any remaining refrigerant.
   a. Turn on chiller water pumps.
   b. Turn on pumpout condenser water.
   c. Place valves in the following positions:

VALVE	1a	1b	2	3	4	5	6	7	10	11
CONDITION			C			C		C	C	

   d. Run the pumpout compressor until the chiller pressure reaches 35 psig (241 kPa); then, shut off the pumpout compressor. Warm chiller condenser water will boil off any entrapped liquid refrigerant and chiller pressure will rise.
   e. When chiller pressure rises to 40 psig (276 kPa), turn on the pumpout compressor until the pressure again reaches 35 psig (241 kPa), then, turn off the pumpout compressor. Repeat this process until the chiller pressure no longer rises; then, turn on the pumpout compressor and pump out until the chiller pressure reaches 18 in. Hg vacuum (41 kPa absolute). This can be done in On or Automatic mode.
   f. Close valves 1a, 1b, 3, 4, and 6.

VALVE	1a	1b	2	3	4	5	6	7	10	11
CONDITION	C	C	C	C	C	C	C	C	C	

   g. Turn off the pumpout condenser water.
4. Establish vacuum for service. To conserve refrigerant, operate the pumpout compressor as described in Step 3e until the chiller pressure is reduced to 18 in. Hg vacuum (41 kPa absolute).

   This operation can be done in Automatic or On mode. In Automatic mode, the compressor will stop automatically at approximately 15 in. Hg vacuum (51 kPa absolute).

CHILLERS WITH ISOLATION VALVES — The valves referred to in the following instructions are shown in Fig. 43 and 44. Valve 7 remains closed.

Transfer All Refrigerant to Chiller Condenser Vessel

1. Push refrigerant into chiller condenser vessel.
   a. Turn on the chiller water pumps and monitor the chiller pressure.
   b. Valve positions:

VALVE	1a	1b	2	3	4	5	11
CONDITION				C	C		

c. Equalize the refrigerant in the chiller cooler and condenser.

d. Turn off chiller water pumps and pumpout condenser water supply.

e. Turn on pumpout compressor to push liquid out of the chiller cooler vessel.

f. When all liquid has been pushed into the chiller condenser vessel, close the cooler refrigerant isolation valve (11).

g. Turn on the chiller water pumps.

h. Turn off the pumpout compressor.

2. Evacuate gas from chiller cooler vessel.

a. Close liquid line service valves 2 and 5; open valves 3 and 4.

VALVE	1a	1b	2	3	4	5	11
CONDITION			C			C	C

b. Turn on pumpout condenser water.

c. Run pumpout compressor until the chiller cooler vessel pressure reaches 18 in. Hg vacuum (41 kPa absolute). Monitor pressures on the chiller control panel and on refrigerant gages.

This operation can be done in Automatic or On mode. In Automatic mode, the compressor will stop automatically at approximately 15 in. Hg vacuum (51 kPa absolute).

d. Close valve 1a.

e. Turn off pumpout compressor.

f. Close valves 1b, 3, and 4.

VALVE	1a	1b	2	3	4	5	11
CONDITION	C	C	C	C	C	C	C

g. Turn off pumpout condenser water.

h. Turn off chiller water pumps and lock out chiller compressor.

Transfer All Refrigerant to Chiller Cooler Vessel

1. Push refrigerant into the chiller cooler vessel.

a. Turn on the chiller water pumps and monitor the chiller pressure.

b. Valve positions:

VALVE	1a	1b	2	3	4	5	11
CONDITION				C	C		

c. Equalize the refrigerant in the chiller cooler and condenser.

d. Turn off chiller water pumps and pumpout condenser water.

e. Turn on pumpout compressor to push refrigerant out of the chiller condenser.

f. When all liquid is out of the chiller condenser, close valve 11 and any other liquid isolation valves on the chiller.

g. Turn off the pumpout compressor.

2. Evacuate gas from chiller condenser vessel.

a. Turn on chiller water pumps.

b. Make sure that liquid line service valves 3 and 4 are closed and valves 2 and 5 are open.

VALVE	1a	1b	2	3	4	5	11
CONDITION				C	C		C

c. Turn on pumpout condenser water.

d. Run the pumpout compressor until the chiller condenser reaches 18 in. Hg vacuum (41 kPa absolute) in Manual or Automatic mode. Monitor pressure at the chiller control panel and refrigerant gages.

e. Close valve 1b.

f. Turn off pumpout compressor.

g. Close valves 1a, 2, and 5.

VALVE	1a	1b	2	3	4	5	11
CONDITION	C	C	C	C	C	C	C

h. Turn off pumpout condenser water.

i. Turn off chiller water pumps and lock out chiller compressor.

Return Refrigerant to Normal Operating Conditions

1. Be sure that the chiller vessel that was opened has been evacuated.

2. Turn on chiller water pumps.

3. Open valves 1a, 1b, and 3.

VALVE	1a	1b	2	3	4	5	11
CONDITION			C		C	C	C

4. Crack open valve 5, gradually increasing pressure in the evacuated chiller vessel to 35 psig (241 kPa). Feed refrigerant slowly to prevent tube freeze-up.

5. Leak test to ensure chiller vessel integrity.

6. Open valve 5 fully.

VALVE	1a	1b	2	3	4	5	11
CONDITION			C		C		C

7. Close valves 1a, 1b, 3, and 5.

8. Open chiller isolation valve 11 and any other isolation valves, if present.

VALVE	1a	1b	2	3	4	5	11
CONDITION	C	C	C	C	C	C	

9. Turn off chiller water pumps.

DISTILLING THE REFRIGERANT

1. Transfer the refrigerant from the chiller to the pumpout storage tank as described in the Transfer the Refrigerant from Chiller to Pumpout Storage Tank section.

2. Equalize the refrigerant pressure.

a. Turn on chiller water pumps and monitor chiller pressures.

b. Close pumpout and storage tank valves 2, 4, 5, and 10, and close chiller charging valve 7; open chiller isolation valve 11 and any other chiller isolation valves, if present.

c. Open pumpout and storage tank valves 3 and 6; open chiller valves 1a and 1b.

VALVE	1a	1b	2	3	4	5	6	7	10	11
CONDITION			C		C	C		C	C	

d. Gradually crack open valve 5 to increase chiller pressure to 35 psig (241 kPa). Slowly feed refrigerant to prevent freeze-up.

e. Open valve 5 fully after the chiller pressure rises above the freezing point of the refrigerant. Let the storage tank and chiller pressure equalize.

3. Transfer remaining refrigerant.
   a. Close valve 3.
   b. Open valve 2.

VALVE	1a	1b	2	3	4	5	6	7	10	11
CONDITION				C	C			C	C	

   c. Turn on pumpout condenser water.
   d. Run the pumpout compressor until the storage tank pressure reaches 5 psig (34 kPa), 18 in. Hg vacuum (41 kPa absolute) in Manual or Automatic mode.
   e. Turn off the pumpout compressor.
   f. Close valves 1a, 1b, 2, 5, and 6.
   g. Turn off pumpout condenser water.

VALVE	1a	1b	2	3	4	5	6	7	10	11
CONDITION	C	C	C	C	C	C	C	C	C	

4. Drain the contaminants from the bottom of the storage tank into a container. Dispose of contaminants safely.

GENERAL MAINTENANCE

Refrigerant Properties — The standard refrigerant for the 19XR chiller is HFC-134a. At normal atmospheric pressure, HFC-134a will boil at –14 F (–25 C) and must, therefore, be kept in pressurized containers or storage tanks. The refrigerant is practically odorless when mixed with air and is noncombustible at atmospheric pressure. Read the Material Safety Data Sheet and the latest ASHRAE Safety Guide for Mechanical Refrigeration to learn more about safe handling of this refrigerant.

⚠ DANGER

HFC-134a will dissolve oil and some nonmetallic materials, dry the skin, and, in heavy concentrations, may displace enough oxygen to cause asphyxiation. When handling this refrigerant, protect the hands and eyes and avoid breathing fumes.

Adding Refrigerant — Follow the procedures described in Trim Refrigerant Charge section, page 93.

⚠ CAUTION

Always use the compressor pumpdown function in the Control Test table to turn on the cooler pump and lock out the compressor when transferring refrigerant. Liquid refrigerant may flash into a gas and cause possible freeze-up when the chiller pressure is below 30 psig (207 kPa) for HFC-134a.

Adjusting the Refrigerant Charge — If the addition or removal of refrigerant is required to improve chiller performance, follow the procedures given under the Trim Refrigerant Charge section, page 93.

Refrigerant Leak Testing — Because HFC-134a is above atmospheric pressure at room temperature, leak testing can be performed with refrigerant in the chiller. Use an electronic halogen leak detector, soap bubble solution, or ultrasonic leak detector. Ensure that the room is well ventilated and free from concentration of refrigerant to keep false readings to a minimum. Before making any necessary repairs to a leak, transfer all refrigerant from the leaking vessel.

Leak Rate — It is recommended by ASHRAE that chillers be taken off line immediately and repaired if the refrigerant leak rate for the entire chiller is more than 10% of the operating refrigerant charge per year.

In addition, Carrier recommends that leaks totalling less than the above rate but more than a rate of 0.1% of the total charge per year should be repaired during annual maintenance or whenever the refrigerant is transferred for other service work.

Test After Service, Repair, or Major Leak — If all the refrigerant has been lost or if the chiller has been opened for service, the chiller or the affected vessels must be pressure tested and leak tested. Refer to the Leak Test Chiller section to perform a leak test.

⚠ WARNING

HFC-134a should not be mixed with air or oxygen and pressurized for leak testing. In general, this refrigerant should not be present with high concentrations of air or oxygen above atmospheric pressures, because the mixture can undergo combustion.

TESTING WITH REFRIGERANT TRACER — Use an environmentally acceptable refrigerant as a tracer for leak test procedures. Use dry nitrogen to raise the machine pressure to leak testing levels.

TESTING WITHOUT REFRIGERANT TRACER — Another method of leak testing is to pressurize with nitrogen only and to use a soap bubble solution or an ultrasonic leak detector to determine if leaks are present.

TO PRESSURIZE WITH DRY NITROGEN

NOTE: Pressurizing with dry nitrogen for leak testing should not be done if the full refrigerant charge is in the vessel because purging the nitrogen is very difficult.

1. Connect a copper tube from the pressure regulator on the cylinder to the refrigerant charging valve. Never apply full cylinder pressure to the pressurizing line. Follow the listed sequence.
2. Open the charging valve fully.
3. Slowly open the cylinder regulating valve.
4. Observe the pressure gage on the chiller and close the regulating valve when the pressure reaches test level. *Do not exceed* 140 psig (965 kPa).
5. Close the charging valve on the chiller. Remove the copper tube if it is no longer required.

Repair the Leak, Retest, and Apply Standing Vacuum Test — After pressurizing the chiller, test for leaks with an electronic halide leak detector, soap bubble solution, or an ultrasonic leak detector. Bring the chiller back to atmospheric pressure, repair any leaks found, and retest.

After retesting and finding no leaks, apply a standing vacuum test. Then dehydrate the chiller. Refer to the Standing Vacuum Test and Chiller Dehydration section (page 70) in the Before Initial Start-Up section.

Checking Guide Vane Linkage — When the chiller is off, the guide vanes are closed and the actuator mechanism is in the position shown in Fig. 49. Slack in the guide vane actuator's drive chain can only be removed with the guide vane actuator fully closed and the chiller shut down. Complete the following steps to adjust chain tension and position:

1. Remove the two set screws in the guide vane actuator sprocket.
2. Loosen the guide vane actuator's holddown bolts.
3. Pull the guide vane actuator away from the suction housing along the slotted holes in the actuator bracket.

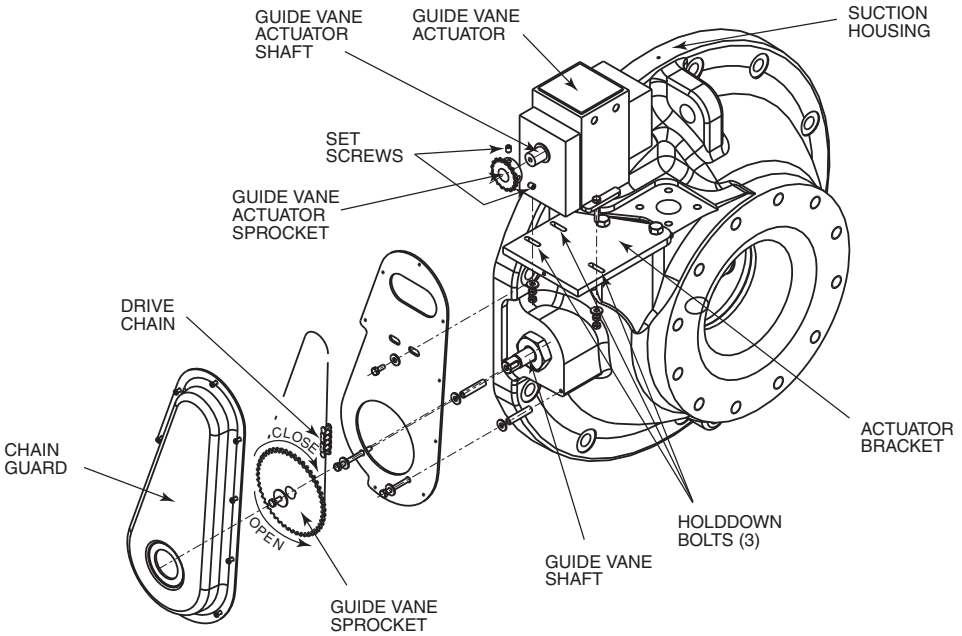

Fig. 49 — Guide Vane Actuator Linkage

4. Rotate the guide vane sprocket fully clockwise and spot-drill the guide vane actuator shaft. Spot-drilling is necessary when the guide vane actuator sprocket set screws on the guide vane actuator shaft need to be re-seated. (Remember: Spot-drill and tighten the first set screw before spot-drilling for the second set screw.)

Trim Refrigerant Charge — If, to obtain optimal chiller performance, it becomes necessary to adjust the refrigerant charge, operate the chiller at design load and then add or remove refrigerant slowly until the difference between the leaving chilled water temperature and the cooler refrigerant temperature reaches design conditions or becomes a minimum. *Do not overcharge.*

Refrigerant may be added either through the storage tank or directly into the chiller as described in the Charge Refrigerant into Chiller section.

To remove any excess refrigerant, follow the procedure in Transfer Refrigerant from Chiller to Pumpout Storage Tank section, Steps 1a and b, page 90.

WEEKLY MAINTENANCE

Check the Lubrication System — Mark the oil level on the reservoir sight glass, and observe the level each week while the chiller is shut down.

If the level goes below the lower sight glass, check the oil reclaim system for proper operation. If additional oil is required, add it through the oil drain charging valve (Fig. 2 and 3). A pump is required when adding oil against refrigerant pressure. The oil charge for the 19XR compressor depends on the compressor Frame size:

- Frame 2 compressor — 8 gal (30 L)
- Frame 3 compressor — 8 gal (30 L)
- Frame 4 compressor — 10 gal (37.8 L)
- Frame 4 compressor with split ring diffuser option — 12 gal (45.0 L)
- Frame 5 compressor — 18 gal (67.8 L)
- Frame E compressor — 18 gal (67.8 L)

The added oil *must* meet Carrier specifications for the 19XR. Refer to Changing Oil Filter and Oil Changes section on page 94. Any additional oil that is added should be logged by noting the amount and date. Any oil that is added due to oil loss that is not related to service will eventually return to the sump. It must be removed when the level is high.

An oil heater is controlled by the PIC II to maintain oil temperature (see the Controls section) when the compressor is off. The ICVC COMPRESS screen displays whether the heater is energized or not. The heater is energized if the *OIL HEATER RELAY* parameter reads ON. If the PIC II shows that the heater is energized and if the sump is still not heating up, the power to the oil heater may be off or the oil level may be too low. Check the oil level, the oil heater contactor voltage, and oil heater resistance.

The PIC II does not permit compressor start-up if the oil temperature is too low. The PIC II continues with start-up only after the temperature is within allowable limits.

SCHEDULED MAINTENANCE

Establish a regular maintenance schedule based on your actual chiller requirements such as chiller load, run hours, and water quality. *The time intervals listed in this section are offered as guides to service only.*

Service Ontime — The ICVC will display a *SERVICE ONTIME* value on the MAINSTAT screen. This value should be reset to zero by the service person or the operator each time major service work is completed so that the time between service can be viewed and tracked.

Inspect the Control Panel — Maintenance consists of general cleaning and tightening of connections. Vacuum the cabinet to eliminate dust build-up. If the chiller control malfunctions, refer to the Troubleshooting Guide section for control checks and adjustments.

⚠ CAUTION

Ensure power to the VFD is isolated when cleaning and tightening connections inside the VFD enclosure. Failure to disconnect power could result in electrocution. The oil filter housing is at a high pressure. Relieve this pressure slowly. Failure to do so could result in serious personal injury.

Check Safety and Operating Controls Monthly — To ensure chiller protection, the automated Control Test should be performed at least once per month. See Table 6 for safety control settings. See Table 15 for Control Test functions.

Changing Oil Filter — Change the oil filter on a yearly basis or when the chiller is opened for repairs. The 19XR has an isolatable oil filter so that the filter may be changed with the refrigerant remaining in the chiller. Early 19XR compressors were designed with the oil filter housing attached to the oil pump. The following procedure applies to later 19XR compressors which have the oil filter separate from the oil pump. Use the following procedure:

1. Ensure the compressor is off and the disconnect for the compressor is open.
2. Disconnect the power to the oil pump.
3. Close the oil filter isolation valves, located behind the power panel, on the top of oil pump assembly.
4. Close the isolation valves located on both ends of the oil filter. Have rags and a catch basin available to collect oil spillage.
5. Equalize the filter's higher internal pressure to ambient by connecting an oil charging hose to the Schrader valve on the oil filter housing. Collect the oil-refrigerant mixture which is discharged.
6. Remove the oil filter assembly by loosening the hex nuts on both ends of the filter assembly.
7. Insert the replacement filter assembly with the arrow on the housing pointing away from the oil pump.
8. Rotate the assembly so that the Schrader drain valve is oriented at the bottom, and tighten the connection nut on each end to a torque of approximately 30 ft-lb (41 N-m).

⚠ CAUTION

The oil filter housing is at a high pressure. Relieve this pressure slowly. Failure to do so could result in serious personal injury.

9. Evacuate the filter housing by placing a vacuum pump on the charging valve. Follow the normal evacuation procedures. Shut the charging valve when done and reconnect the valve so that new oil can be pumped into the filter housing. Fill with the same amount that was removed; then close the charging valve.
10. Remove the hose from the charging valve, open the isolation valves to the filter housing, and turn on the power to the pump and the motor.

Oil Specification — If oil is added, it must meet the following Carrier specifications:

Oil Type for units using R-134a . . . . . .Inhibited polyolester-based synthetic compressor oil formatted for use with HFC, gear-driven, hermetic compressors.

ISO Viscosity Grade. 68

The polyolester-based oil (P/N: PP23BZ103) may be ordered from your local Carrier representative.

Oil Changes — Carrier recommends that a yearly oil analysis be performed to determine when to change oil and when to perform a compressor inspection. However, if yearly analysis is not performed or available, the time between oil changes should be no longer than 5 years.

TO CHANGE THE OIL

1. Transfer the refrigerant into the chiller condenser vessel (for isolatable vessels) or to a pumpout storage tank.
2. Mark the existing oil level.
3. Open the control and oil heater circuit breaker.
4. When the chiller pressure is 5 psig (34 kPa) or less, drain the oil reservoir by opening the oil charging valve (Fig. 2 and 3). Slowly open the valve against refrigerant pressure.
5. Change the oil filter at this time. See Changing Oil Filter section.
6. Change the refrigerant filter at this time, see the next section, Refrigerant Filter.
7. Charge the chiller with oil. Charge until the oil level is equal to the oil level marked in Step 2. Turn on the power to the oil heater and let the PIC II warm it up to at least 140 F (60 C). Operate the oil pump manually, using the Control Test function, for 2 minutes. For shutdown conditions, the oil level should be full in the lower sight glass. If the oil level is above $^1/_2$ full in the upper sight glass, remove the excess oil. The oil level should now be equal to the amount shown in Step 2.

Refrigerant Filter — A refrigerant filter/drier, located on the refrigerant cooling line to the motor, should be changed once a year or more often if filter condition indicates a need for more frequent replacement. Change the filter by closing the filter isolation valves (Fig. 2 and 3) and slowly opening the flare fittings with a wrench and back-up wrench to relieve the pressure. A moisture indicator sight glass is located beyond this filter to indicate the volume and moisture in the refrigerant. If the moisture indicator indicates moisture, locate the source of water immediately by performing a thorough leak check.

Oil Reclaim Filter — The oil reclaim system has a strainer on the eductor suction line, a strainer on the discharge pressure line, and a filter on the cooler scavenging line. Replace the filter once every 5 years or when the machine is opened for service. This filter does not contain desiccant for moisture removal, so changing the filter will not change the moisture indicator status. Change the filter by closing the filter isolation valves and slowly opening the flare fitting with a wrench and back-up wrench to relieve the pressure. Change the strainers once every 5 years or whenever refrigerant is evacuated from the cooler.

Inspect Refrigerant Float System — Perform this inspection only if the following symptoms are seen.

- There is a simultaneous drop in cooler pressure and increase in condenser pressure. This will be accompanied by an increase in kW/Ton.
- The liquid line downstream of the float valve feels warm. This indicates condenser gas flowing past the float. An increase in kW/Ton will also occur.

1. Transfer the refrigerant into the cooler vessel or into a pumpout storage tank.
2. Remove the float access cover.
3. Clean the chamber and valve assembly thoroughly. Be sure the valve moves freely. Ensure that all openings are free of obstructions.
4. Examine the cover gasket and replace if necessary. See Fig. 50 for a view of the float valve design. Inspect the orientation of the float slide pin. It must be pointed toward the bubbler tube for proper operation.

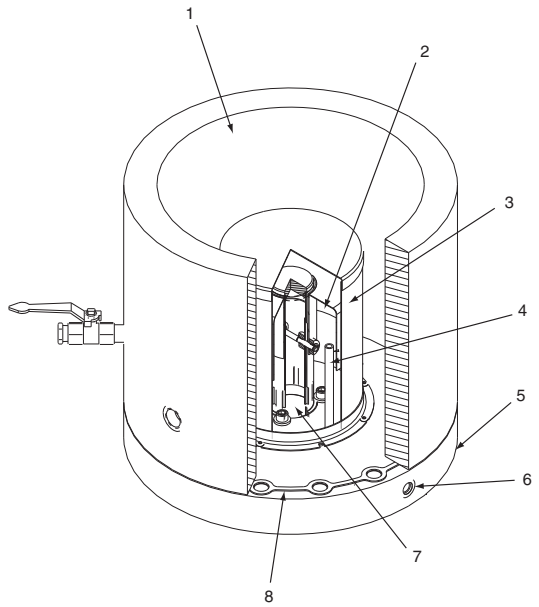

LEGEND

1 — Refrigerant Inlet from FLASC Chamber
2 — Linear Float Assembly
3 — Float Screen
4 — Bubbler Line
5 — Float Cover
6 — Bubbler Line Connection
7 — Refrigerant Outlet to Cooler
8 — Gasket

Fig. 50 — 19XR/XRV Float Valve Design

ECONOMIZER FLOAT SYSTEM (Two-Stage Compressors) — For two-stage compressors, the economizer has a low side ball type float system. The float refrigerant level can be observed through the two sight glasses located on the float cover under the condenser. See Fig. 51 for float detail. Inspect the float every five years. Clean the chamber and the float valve assembly. Be sure that the float moves freely and the ball bearings that the float moves on are clean.

ECONOMIZER DAMPER VALVE (Two-Stage Compressors) — The damper valve should be inspected every 5 years or when the condenser is opened for service. With the refrigerant transferred, remove the spring housing from the valve (Fig. 52). The valve spring will exert 50 lb force upward.

Check the valve and linkage for free travel and loose parts. Clean the assembly thoroughly. Replace the valve packing and the housing O-ring if necessary.

Inspect Relief Valves and Piping — The relief valves on this chiller protect the system against the potentially dangerous effects of overpressure. To ensure against damage to the equipment and possible injury to personnel, these devices must be kept in peak operating condition.

As a minimum, the following maintenance is required.

1. At least once a year, disconnect the vent piping at the valve outlet and carefully inspect the valve body and mechanism for any evidence of internal corrosion or rust, dirt, scale, leakage, etc.
2. If corrosion or foreign material is found, do not attempt to repair or recondition. *Replace the valve.*
3. If the chiller is installed in a corrosive atmosphere or the relief valves are vented into a corrosive atmosphere, inspect the relief valves at more frequent intervals.

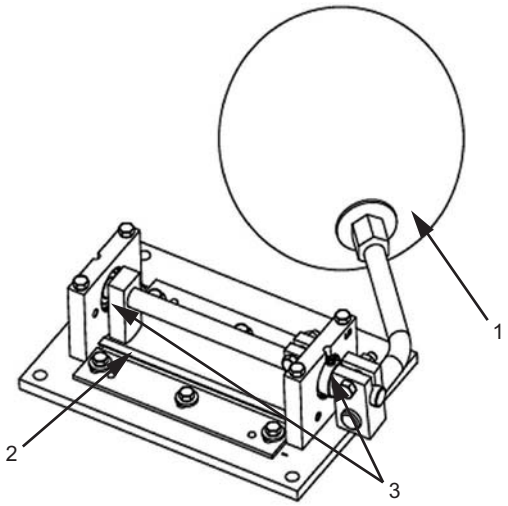

LEGEND

1 — Float Ball
2 — Refrigerant Exit
3 — Bearings

Fig. 51 — Economizer Float System (Two-Stage Compressor Chiller)

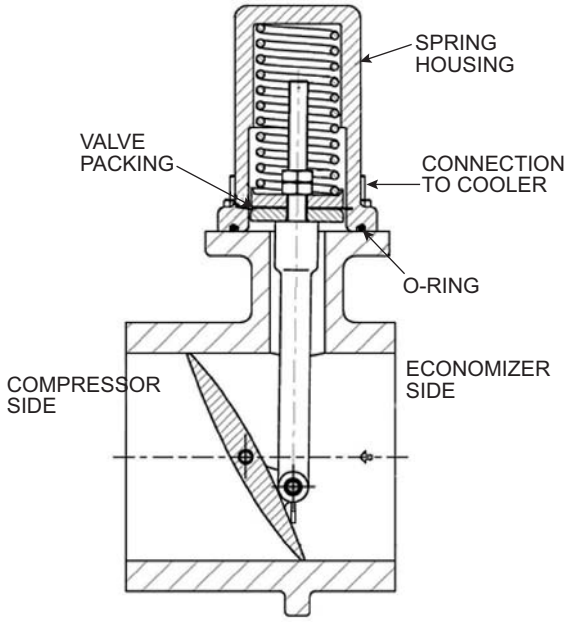

Fig. 52 — Economizer Damper Valve (Two-Stage Compressor Chiller)

Compressor Bearing and Gear Maintenance — The key to good bearing and gear maintenance is proper lubrication. Use the proper grade of oil, maintained at recommended level, temperature, and pressure. Inspect the lubrication system regularly and thoroughly. Annual oil analyses and vibration measurements are recommended.

Excessive bearing wear can sometimes be detected through increased vibration or increased bearing temperature. Gears, babbitted journal, and thrust bearings should be examined for signs of wear based on the results of the annual oil analysis and vibration levels. To inspect the bearings, a complete compressor teardown is required. Only a trained service technician should remove and examine the bearings. The frequency of examination is determined by the hours of chiller operation, load conditions during operation, and the condition of the oil and the lubrication system. Rolling element bearings (Frame 3, 4, 5

and E compressor high speed shaft only) cannot be field inspected; excessive vibration is the primary sign of wear or damage. If either symptom appears, contact an experienced and responsible service organization for assistance.

Inspect the Heat Exchanger Tubes and Flow Devices

COOLER AND OPTIONAL FLOW DEVICES — Inspect and clean the cooler tubes at the end of the first operating season. Because these tubes have internal ridges, a rotary-type tube cleaning system is needed to fully clean the tubes. Inspect the tubes' condition to determine the scheduled frequency for future cleaning and to determine whether water treatment in the chilled water/brine circuit is adequate. Inspect the entering and leaving chilled water temperature sensors and flow devices for signs of corrosion or scale. Replace a sensor or Schrader fitting if corroded or remove any scale if found.

CONDENSER AND OPTIONAL FLOW DEVICES — Since this water circuit is usually an open-type system, the tubes may be subject to contamination and scale. Clean the condenser tubes with a rotary tube cleaning system at least once per year and more often if the water is contaminated. Inspect the entering and leaving condenser water sensors and flow devices for signs of corrosion or scale. Replace the sensor or Schrader fitting if corroded or remove any scale if found.

Higher than normal condenser pressures, together with the inability to reach full refrigeration load, usually indicate dirty tubes or air in the chiller. If the refrigeration log indicates a rise above normal condenser pressures, check the condenser refrigerant temperature against the leaving condenser water temperature. If this reading is more than what the design difference is supposed to be, the condenser tubes may be dirty or water flow may be incorrect. Because HFC-134a is a high-pressure refrigerant, air usually does not enter the chiller.

During the tube cleaning process, use brushes specially designed to avoid scraping and scratching the tube wall. Contact your Carrier representative to obtain these brushes. Do not use wire brushes.

Hard scale may require chemical treatment for its prevention or removal. Consult a water treatment specialist for proper treatment.

Water Leaks — The refrigerant moisture indicator on the refrigerant motor cooling line (Fig. 2 and 3) indicates whether there is water leakage during chiller operation. Water leaks should be repaired immediately.

⚠ CAUTION

The chiller must be dehydrated after repair of water leaks or damage may result. See Chiller Dehydration section, page 70.

Water Treatment — Untreated or improperly treated water may result in corrosion, scaling, erosion, or algae. The services of a qualified water treatment specialist should be obtained to develop and monitor a treatment program.

⚠ CAUTION

Water must be within design flow limits, clean, and treated to ensure proper chiller performance and reduce the potential of tube damage due to corrosion, scaling, erosion, and algae. Carrier assumes no responsibility for chiller damage resulting from untreated or improperly treated water.

Inspect the Starting Equipment — Before working on any starter, shut off the chiller, open and tag all disconnects supplying power to the starter.

⚠ CAUTION

The motor leads must be disconnected from the VFD before an insulation test is performed. The voltage generated from the tester can damage the VFD or drive components.

⚠ WARNING

Before working on any VFD, shut off the chiller, open and tag all disconnects supplying power to the VFD. After disconnecting input power to a VFD and before touching any internal components, wait five minutes for the DC bus capacitors to discharge, then check the voltage with a voltmeter. Failure to observe this precaution could result in severe bodily injury or death.

⚠ WARNING

The disconnect on the VFD front panel does not deenergize all internal circuits. Open all internal and remote disconnects before servicing the VFD.

⚠ WARNING

Never open isolating knife switches while equipment is operating. Electrical arcing can cause serious injury.

Periodically vacuum or blow off accumulated debris on the internal parts with a high-velocity, low-pressure blower.

Power connections on newly installed starters may relax and loosen after a month of operation. Turn power off and retighten. Recheck annually thereafter.

⚠ CAUTION

Loose power connections can cause voltage spikes, overheating, malfunctioning, or failures.

Recalibrate Pressure Transducers — Once a year, the pressure transducers should be checked against a pressure gage reading. Check all eight transducers: the 2 oil differential pressure transducers, the condenser pressure transducer, the cooler pressure transducer, and the optional waterside pressure transducer pairs (consisting of 4 flow devices: 2 cooler, 2 condenser).

Note the evaporator and condenser pressure readings on the HEAT_EX screen on the ICVC (*EVAPORATOR PRESSURE* and *CONDENSER PRESSURE*). Attach an accurate set of refrigeration gages to the cooler and condenser Schrader fittings. Compare the two readings. If there is a difference in readings, the transducer can be calibrated as described in the Troubleshooting Guide section. Oil differential pressure (*OIL PUMP DELTA P* on the COMPRESS screen) should be zero whenever the compressor is off.

Optional Pumpout System Maintenance — For pumpout unit compressor maintenance details, refer to the 19XR Positive Pressure Storage System Installation, Start-Up, and Service Instructions.

OPTIONAL PUMPOUT COMPRESSOR OIL CHARGE — Use oil conforming to Carrier specifications for reciprocating compressor usage. Oil requirements are as follows:

ISO Viscosity . . . . . 68 or 220

Carrier Part Number. . . . . PP23BZ103 or PP23BZ104

The total oil charge is 13 oz. (0.5 L)

Oil should be visible in the pumpout compressor sight glass both during operation and at shutdown. Always check the oil level before operating the pumpout compressor. Before adding changing oil, relieve the refrigerant pressure through the access valves.

Relieve refrigerant pressure and add oil to the pumpout unit as follows:

1. Close service valves 2 and 4.
2. Run the pumpout compressor in Automatic mode for one minute or until the vacuum switch is satisfied and compressor shuts off.
3. Move the pumpout selector switch to OFF. Pumpout compressor shell should now be under vacuum.
4. Oil can be added to the shell with a hand oil pump through the access valve in the compressor base.

NOTE: The compressor access valve has a self-sealing fitting which will require a hose connection with a depressor to open.

OPTIONAL PUMPOUT SAFETY CONTROL SETTINGS (Fig. 53) — The optional pumpout system high-pressure switch opens at 185 psig (1276 kPa) and closes at 140 psig (965 kPa). Check the switch setting by operating the pumpout compressor and slowly throttling the pumpout condenser water.

Ordering Replacement Chiller Parts — When ordering Carrier specified parts, the following information must accompany an order:

- chiller model number and serial number
- name, quantity, and part number of the part required
- delivery address and method of shipment.

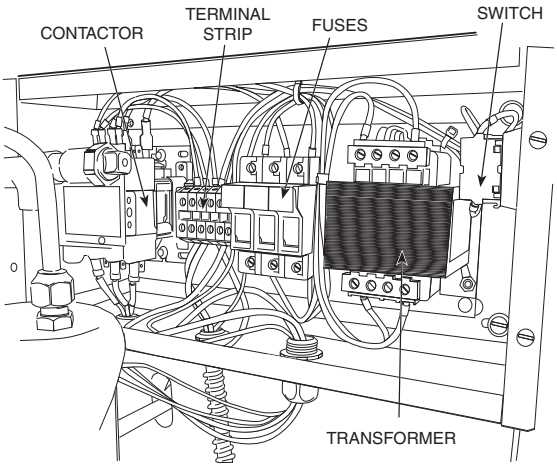

Fig. 53 — Pumpout Control Box (Interior)

TROUBLESHOOTING GUIDE

Overview — The PIC II has many features to help the operator and technician troubleshoot a 19XR chiller.

- The ICVC shows the chiller's actual operating conditions and can be viewed while the unit is running.
- The ICVC default screen freezes when an alarm occurs. The freeze enables the operator to view the chiller conditions at the time of alarm. The STATUS screens continue to show current information. Once all alarms have been cleared (by correcting the problems and pressing the RESET softkey), the ICVC default screen returns to normal operation.
- The CONTROL ALGORITHM STATUS screens (which include the CAPACITY, OVERRIDE, SURGPREV, LL_MAINT, ISM_HIST, LOADSHED, CUR_ALARM, WSMDEFME, and OCCDEFCM screens) display information that helps to diagnose problems with chilled water temperature control, chilled water temperature control overrides, hot gas bypass, surge algorithm status, and time schedule operation.
- The control test feature facilitates the proper operation and test of temperature sensors, pressure transducers, the guide vane actuator, diffuser actuator (if equipped), oil pump, water pumps, tower control, and other on/off outputs while the compressor is stopped. It also has the ability to lock off the compressor and turn on water pumps for pumpout operation. The ICVC shows the temperatures and pressures required during these operations.
- From other SERVICE tables, the operator/technician can access configured items, such as chilled water resets, override set points, etc.
- If an operating fault is detected, an alarm message is generated and displayed on the ICVC default screen. A more detailed message — along with a diagnostic message — is also stored into the ALARM HISTORY table.
- Review the ALERT HISTORY table to view other less critical events which may have occurred. Compare timing of relevant events and alarms.

Checking Display Messages — The first area to check when troubleshooting the 19XR is the ICVC display. If the alarm light is flashing, check the primary and secondary message lines on the ICVC default screen (Fig. 17). These messages will indicate where the fault is occurring. These messages contain the alarm message with a specified code. This code or state appears with each alarm and alert message. The ALARM and ALERT HISTORY tables on the ICVC SERVICE menu also contain an alarm or alert message to further expand on the alarm or alert. For a complete list of possible alarm messages, see Table 16. If the alarm light starts to flash while accessing a menu screen, press the EXIT softkey to return to the default screen to read the alarm message. The STATUS screen can also be accessed to determine where an alarm exists.

A "C" to the right of a parameter's value means that there is a communications fault on that channel.

Checking Temperature Sensors — All temperature sensors are thermistor-type sensors. This means that the resistance of the sensor varies with temperature. All sensors have the same resistance characteristics. If the controls are on, determine sensor temperature by measuring voltage drop; if the controls are powered off, determine sensor temperature by measuring resistance. Compare the readings to the values listed in Tables 17A and 17B.

RESISTANCE CHECK — Turn off the control power and, from the module, disconnect the terminal plug of the sensor in question. With a digital ohmmeter, measure sensor resistance between receptacles as designated by the wiring diagram. The resistance and corresponding temperature are listed in Tables 17A and 17B. Check the resistance of both wires to ground. This resistance should be infinite.

VOLTAGE DROP — The voltage drop across any energized sensor can be measured with a digital voltmeter while the control is energized. Table 17A or 17B lists the relationship between temperature and sensor voltage drop (volts dc measured across the energized sensor). Exercise care when measuring voltage to prevent damage to the sensor leads, connector plugs, and modules. Sensors should also be checked at the sensor plugs.

⚠ CAUTION

Relieve all refrigerant pressure or drain the water before removing any thermowell threaded into the refrigerant pressure boundary. Failure to do so could result in personal injury and equipment damage.

continued on page 114.

Table 16 — ICVC Primary and Secondary Messages and Custom Alarm/Alert Messages with Troubleshooting Guides

A. MANUAL STOP

PRIMARY MESSAGE	SECONDARY MESSAGE	PROBABLE CAUSE/REMEDY
MANUALLY STOPPED — PRESS	CCN OR LOCAL TO START	PIC II in OFF mode, press CCN or LOCAL softkey to start unit.
TERMINATE PUMPDOWN MODE	TO SELECT CCN OR LOCAL	Enter the CONTROL TEST table and select TERMINATE LOCKOUT to unlock compressor.
SHUTDOWN IN PROGRESS	COMPRESSOR UNLOADING	Chiller unloading before shutdown due to soft/stop feature.
SHUTDOWN IN PROGRESS	COMPRESSOR DEENERGIZED	Chiller compressor is being commanded to stop. Water pumps are deenergized within one minute.
ICE BUILD	OPERATION COMPLETE	Chiller shutdown from Ice Build operation.
SHUTDOWN IN PROGRESS	RECYCLE RESTART PENDING	Low Load Shutdown

B. READY TO START

PRIMARY MESSAGE	SECONDARY MESSAGE	PROBABLE CAUSE/REMEDY
READY TO START IN XX MIN	UNOCCUPIED MODE	Time schedule for PIC II is unoccupied. Chillers will start only when occupied. Check OCCPCnnS and HOLIDAYS screens.
READY TO START IN XX MIN	REMOTE CONTACTS OPEN	Remote contacts are open. Close contacts on ISM J2-5 and J2-6 to start.
READY TO START IN XX MIN	STOP COMMAND IN EFFECT	Chiller START/STOP on MAINSTAT manually forced to STOP. Release SUPERVISOR Force or send Start Force to start.
READY TO START IN XX MIN	OCCUPIED MODE	Chiller timer counting down. Unit ready to start.
READY TO START IN XX MIN	REMOTE CONTACTS CLOSED	Chiller timer counting down. Unit will proceed to start. Remote contact Enabled and Closed. The chiller will stop when the remote contacts are opened.
READY TO START IN XX MIN	START COMMAND IN EFFECT	Chiller START/STOP on MAINSTAT manually forced to START. Release SUPERVISOR force to start under normal control.
READY TO START IN XX MIN	RECYCLE RESTART PENDING	Chiller is in recycle mode.
READY TO START	UNOCCUPIED MODE	Time schedule for PIC II is UNOCCUPIED in OCCPC01S screen. Chiller will start when state changes to OCCUPIED. Make sure the CURRENT TIME and DATE are correct in the TIME AND DATE screen.
READY TO START	REMOTE CONTACTS OPEN	Remote contacts have stopped the chiller. Close contacts on ISM J2-5 and J2-6 to start.
READY TO START	STOP COMMAND IN EFFECT	Chiller START/STOP on MAINSTAT manually forced to STOP. Release SUPERVISOR force to start.
READY TO START	OCCUPIED MODE	Chiller timer countdown is complete. Unit will proceed to start.
READY TO START	REMOTE CONTACTS CLOSED	Chiller timer count down complete. Unit will proceed to start.
READY TO START	START COMMAND IN EFFECT	Chiller START/STOP on MAINSTAT has been manually forced to START. Chiller will start regardless of time schedule or remote contact status.
STARTUP INHIBITED	LOADSHED IN EFFECT	CCN loadshed module commanding chiller to stop.

C. IN RECYCLE SHUTDOWN

PRIMARY MESSAGE	SECONDARY MESSAGE	PROBABLE CAUSE/REMEDY
RECYCLE RESTART PENDING	OCCUPIED MODE	Unit in recycle mode, chilled water temperature is not sufficiently above Setpoint to start.
RECYCLE RESTART PENDING	REMOTE CONTACT CLOSED	Unit in recycle mode, chilled water temperature is not sufficiently above Setpoint to start.
RECYCLE RESTART PENDING	START COMMAND IN EFFECT	Chiller START/STOP on MAINSTAT manually forced to START, chilled water temperature is not sufficiently above Setpoint to start.
RECYCLE RESTART PENDING	ICE BUILD MODE	Chiller in ICE BUILD mode. Chilled water temperature is satisfied for ICE BUILD conditions.

LEGEND FOR TABLE 16 (A through K)

CCM — Chiller Control Module
CHW — Chilled Water
ICVC — International Chiller Visual Control
ISM — Integrated Starter Module
PIC II — Product Integrated Controls II
VFD — Variable Frequency Drive

Table 16 — ICVC Primary and Secondary Messages and Custom Alarm/Alert Messages with Troubleshooting Guides (cont)

D. PRE-START ALERTS: These alerts only delay start-up. When alert is corrected, the start-up will continue. No reset is necessary.

FAULT STATE	PRIMARY MESSAGE	SECONDARY MESSAGE	PRIMARY CAUSE	ADDITIONAL CAUSE/REMEDY
100	**PRESTART ALERT**	STARTS LIMIT EXCEEDED	100->Excessive compressor starts (8 in 12 hours)	Check STARTS IN 12 HOURS in MAINSTAT screen. Depress the RESET softkey if additional start is required. Reassess start-up requirements. (Recycle restarts and auto restarts after power failure are not counted.)
101	**PRESTART ALERT**	HIGH BEARING TEMPERATURE	"101->Comp Thrust Bearing Temp [VALUE] exceeded limit of [LIMIT]*.	Check COMP THRUST BRG TEMP in COMPRESS screen. Check oil heater and oil cooler for proper operation. Check for low oil level, partially closed oil supply valves, clogged oil filters. Check the Thrust Bearing Temperature sensor wiring and accuracy to CCM J4-19 and J4-20. Check Resistance of thermistor vs. temperature. Check COMP THRUST BRG ALERT setting in SETUP1 screen. Check Resistance of thermistor vs. temperature.
102	**PRESTART ALERT**	HIGH MOTOR TEMPERATURE	102->Comp Motor Winding Temp [VALUE] exceeded limit of [LIMIT]*.	Check COMP MOTOR WINDING TEMP in COMPRESS screen. Check motor temperature sensor for wiring and accuracy to CCM J4-23 and J4-24. Check Resistance of thermistor vs. temperature Check motor cooling line and isolation valves for proper operation, or restrictions, check refrigerant filter/drier. Check for excessive starts within a short time span. Check COMP MOTOR TEMP OVERRIDE setting in SETUP1 screen.
103	**PRESTART ALERT**	HIGH DISCHARGE TEMP	103->Comp Discharge Temp [VALUE] exceeded limit of [LIMIT]*.	Check COMP DISCHARGE TEMP in COMPRESS screen. Allow compressor discharge temperature sensor to cool. Check compressor discharge temperature sensor wiring and accuracy to CCM J4-17 and J4-18. Check Resistance of thermistor vs. temperature Check for excessive starts. Check COMP DISCHARGE ALERT setting in SETUP1 screen.
104	**PRESTART ALERT**	LOW REFRIGERANT TEMP	104->Evaporator Refrig Temp [VALUE] exceeded limit of [LIMIT]*.	Check EVAPORATOR PRESSURE, CALC EVAP SAT TEMP, and EVAP REFRIG LIQUID TEMP in HEAT_EX screen. Check Evaporator Pressure transducer and Evaporator Refrigerant Liquid Temperature sensor wiring and accuracy. Check Resistance of thermistor vs. temperature. Check for low chilled water supply temperatures. Check refrigerant charge. Check REFRIG OVERRIDE DELTA T and EVAP REFRIG TRIPPOINT in SETUP1 screen.
105	**PRESTART ALERT**	LOW OIL TEMPERATURE	105->Oil Sump Temp [VALUE] exceeded limit of [LIMIT]*.	Check OIL SUMP TEMP in ICVC default screen. Check 1C oil heater contactor/relay and power. Check Oil Sump Temperature Sensor wiring and accuracy. Check Resistance of thermistor vs. temperature. Check oil level and oil pump operation. Check EVAPORATOR PRESSURE, CALC EVAP SAT TEMP, and EVAP REFRIG LIQUID TEMP in HEAT_EX screen.
106	**PRESTART ALERT**	HIGH CONDENSER PRESSURE	106->Condenser Pressure [VALUE] exceeded limit of [LIMIT]*.	Check CONDENSER PRESSURE in HEAT_EX screen. Check Condenser Pressure transducer wiring and accuracy. Check for high condenser water temperatures. Check COND PRESS OVERRIDE in SETUP1 screen.
107	**PRESTART ALERT**	LOW LINE VOLTAGE	107→Average Line Voltage [VALUE] exceeded limit of [LIMIT]*.	Check ACTUAL LINE VOLTAGE in POWER screen. Check UNDERVOLTAGE THRESHOLD in ISM_CONF screen. Check voltage supply. Check wiring to ISM J3-L1, J3-L2, and J3-L3. Check voltage transformers and switch gear. Consult power utility if voltage is low.
108	**PRESTART ALERT**	HIGH LINE VOLTAGE	108->Average Line Voltage [VALUE] exceeded limit of [LIMIT]*.	Check ACTUAL LINE VOLTAGE in POWER screen. Check OVERVOLTAGE THRESHOLD in ISM_CONF screen. Check voltage supply. Check voltage transformers and switch gear. Consult power utility if voltage is high.
109	**PRESS STOP, PERFORM**	GUIDE VANE CALIBRATION	109→Actual Guide Vane Pos Calibration Required Before Startup	Press STOP button on ICVC and perform Guide Vane Calibration in CONTROLS TEST screen. Check guide vane actuator feedback potentiometer and wiring to CCM J4-9 and J4-10.

*[LIMIT] is shown on the ICVC as temperature, pressure, voltage, etc., predefined or selected by the operator as an override or an alert. [VALUE] is the actual pressure, temperature, voltage, etc., at which the control tripped. "Exceeded Limit" in Alarm or Alert messages may mean the value is above or below a threshold.

Table 16 — ICVC Primary and Secondary Messages and Custom Alarm/Alert Messages with Troubleshooting Guides (cont)

E. START-UP IN PROGRESS

PRIMARY MESSAGE	SECONDARY MESSAGE	CAUSE/REMEDY
STARTUP IN PROGRESS	OCCUPIED MODE	Chiller is starting. Time schedule is Occupied (OCCUPIED? = YES)
STARTUP IN PROGRESS	REMOTE CONTACT CLOSED	Chiller is starting. REMOTE CONTACTS OPTION is set to ENABLE. Remote start contact input on ISM terminals J2-5 and J2-6 is closed.
STARTUP IN PROGRESS	START COMMAND IN EFFECT	Chiller is starting. Chiller START/STOP in MAINSTAT is manually forced to START.
AUTORESTART IN PROGRESS	OCCUPIED MODE	Chiller is starting after power failure. Time schedule is Occupied (OCCUPIED? = YES).
AUTORESTART IN PROGRESS	REMOTE CONTACT CLOSED	Chiller is starting after power failure. REMOTE CONTACTS OPTION is set to ENABLE. Remote start contact input on ISM terminals J2-5 and J2-6 is closed.
AUTORESTART IN PROGRESS	START COMMAND IN EFFECT	Chiller is starting after power failure. Chiller START/STOP on MAINSTAT screen is manually forced to START.

F. NORMAL RUN

PRIMARY MESSAGE	SECONDARY MESSAGE	CAUSE/REMEDY
RUNNING — RESET ACTIVE	BY 4-20 mA SIGNAL	Auto chilled water reset active based on external input. ENABLE RESET TYPE =1. A non-zero temperature reset based on a 4-20 mA Auto Chilled Water Reset signal on CCM J5-3 and J5-4 is being added to the SETPOINT to determine the CONTROL POINT. See TEMP_CTL screen
RUNNING — RESET ACTIVE	REMOTE TEMP SENSOR	Auto chilled water reset active based on external input. ENABLE RESET TYPE =2. A non-zero temperature reset based on the Remote Temperature Reset sensor signal on CCM J4-13 and J4-14 is being added to the SETPOINT to determine the CONTROL POINT. See TEMP_CTL screen
RUNNING — RESET ACTIVE	CHW TEMP DIFFERENCE	Auto chilled water reset active based on cooler chilled water temperature difference. ENABLE RESET TYPE =3. A non-zero temperature reset based on the difference between the ENTERING CHILLED WATER and LEAVING CHILLED WATER is being added to the SETPOINT to determine the CONTROL POINT. See TEMP_CTL screen.
RUNNING — TEMP CONTROL	LEAVING CHILLED WATER	Default method of temperature control. ECW CONTROL OPTION = DSABLE. Chiller capacity is being controlled so the LEAVING CHILLED WATER temperature is being maintained within 1/2 of the CHILLED WATER DEADBAND on either side of the CONTROL POINT. See TEMP_CTL screen
RUNNING — TEMP CONTROL	ENTERING CHILLED WATER	Entering Chilled Water (ECW) control enabled. ECW CONTROL OPTION = ENABLE. Chiller capacity is being controlled so the ENTERING CHILLED WATER temperature is being maintained within 1/2 of the CHILLED WATER DEADBAND on either side of the CONTROL POINT. See TEMP_CTL screen.
RUNNING — TEMP CONTROL	TEMPERATURE RAMP LOADING	Ramp Loading based on LEAVING CHILLED WATER or ENTERING CHILLED WATER is in effect. PULLDOWN RAMP TYPE = 0. Capacity inhibit is in effect because LEAVING CHILLED WATER or ENTERING CHILLED WATER has fallen below the ramping temperature pulldown Setpoint. See RAMP_DEM screen.
RUNNING — DEMAND LIMITED	BY DEMAND RAMP LOADING	Ramp Loading based on AVERAGE LINE CURRENT or MOTOR PERCENT KILOWATTS is in effect. PULLDOWN RAMP TYPE = 0. Capacity inhibit is in effect because AVERAGE LINE CURRENT or MOTOR PERCENT KILOWATTS has exceeded the ramping active demand limit. See RAMP_DEM screen.
RUNNING — DEMAND LIMITED	BY LOCAL DEMAND SETPOINT	Actual demand has exceeded ACTIVE DEMAND LIMIT. 20mA DEMAND LIMIT OPT is DISABLED. ACTIVE DEMAND LIMIT is set equal to BASE DEMAND LIMIT. AVERAGE LINE CURRENT or MOTOR PERCENT KILOWATTS is greater than ACTIVE DEMAND LIMIT.
RUNNING — DEMAND LIMITED	BY 4-20 mA SIGNAL	Actual demand has exceeded ACTIVE DEMAND LIMIT. 20mA DEMAND LIMIT OPT is ENABLED. ACTIVE DEMAND LIMIT is adjusted based on 4-20 mA Auto Demand Limit signal received on CCM J5-1 and J5-2. AVERAGE LINE CURRENT or MOTOR PERCENT KILOWATTS is greater than ACTIVE DEMAND LIMIT.
RUNNING — DEMAND LIMITED	BY CCN SIGNAL	Actual demand has exceeded ACTIVE DEMAND LIMIT. Chiller CONTROL MODE = CCN. Value of ACTIVE DEMAND LIMIT is being forced by a CCN device. AVERAGE LINE CURRENT or MOTOR PERCENT KILOWATTS is greater than ACTIVE DEMAND LIMIT.
RUNNING — DEMAND LIMITED	BY LOADSHED/REDLINE	Actual demand has exceeded ACTIVE DEMAND LIMIT. Chiller CONTROL MODE = CCN. Value of ACTIVE DEMAND LIMIT was set equal to AVERAGE LINE CURRENT or MOTOR PERCENT KILOWATTS at the time a Redline command was received by the loadshed POC. AVERAGE LINE CURRENT of MOTOR PERCENT KILOWATTS is greater than ACTIVE DEMAND LIMIT. See LOADSHED screen.
RUNNING — TEMP CONTROL	HOT GAS BYPASS	SURGE LIMIT/HGBP OPTION = 1 and HOT GAS BYPASS RELAY is ON. See surge prevention description and OPTIONS screen. If VFD OPTION is ENABLED then TARGET VFD SPEED = VFD MAXIMUM SPEED or the TARGET VFD SPEED is forced.
RUNNING — DEMAND LIMITED	BY LOCAL SIGNAL	ACTIVE DEMAND LIMIT has been manually forced on MAINSTAT screen. Chiller CONTROL MODE = LOCAL.
RUNNING —TEMP CONTROL	ICE BUILD MODE	ICE BUILD OPTION is set to ENABLE and chiller is running under Ice Build temperature control. OCCPC02S Ice Build Schedule is OCCUPIED.
RUNNING —TEMP CONTROL	IN VFD RAMPDOWN	VFD OPTION is ENABLED. VFD Rampdown goes into effect following the completion of start-up Ramp Loading and when the water temperature is within or below the CHILLED WATER DEADBAND.
RUNNING —TEMP CONTROL	HGBP IS ADDING LOAD	SURGE LIMIT/HGBP OPTION = 2. CHILLED WATER DELTA T is less than HGBP ON DELTA T. See OPTIONS and SURGPREV screens.

Table 16 — ICVC Primary and Secondary Messages and Custom Alarm/Alert Messages with Troubleshooting Guides (cont)

G. NORMAL RUN WITH OVERRIDES

ICVC FAULT STATE	PRIMARY MESSAGE	SECONDARY MESSAGE	PRIMARY CAUSE	ADDITIONAL CAUSE/REMEDY
120	**RUN CAPACITY LIMITED**	HIGH CONDENSER PRESSURE	120->Condenser Pressure [VALUE] exceeded limit of [LIMIT]*.	Check condenser water pump operation. Check for high condenser water temperatures or low flow rate. Check cooling tower bypass valves and condenser water strainers. Verify that chiller isolation valves are open. Check COND PRESS OVERRIDE setting in SETUP1 screen.
121	**RUN CAPACITY LIMITED**	HIGH MOTOR TEMPERATURE	121->Comp Motor Winding Temp [VALUE] exceeded limit of [LIMIT]*.	Check for closed valves or restrictions in motor cooling lines. Check for closed refrigerant isolation valves. Check COMP MOTOR TEMP OVERRIDE setting in SETUP1. Check refrigerant filter drier.
122	**RUN CAPACITY LIMITED**	LOW EVAP REFRIG TEMP	122->Evaporator Refrig Temp [VALUE] exceeded limit of [LIMIT]*.	Check refrigerant charge. Check that optional cooler liquid line isolation valve is fully open. Check for excessive condenser flow or low chilled water flow. Check for low entering cooler water temperature. Check that condenser inlet and outlet water nozzles are piped correctly. Check for waterbox division plate gasket bypass. Check REFRIG OVERRIDE DELTA T setting in SETUP1 screen.
123	**RUN CAPACITY LIMITED**	HIGH COMPRESSOR LIFT	123->Surge Prevention Override: Lift Too High For Compressor	Check for high condenser water temperature or low evaporator refrigerant temperature. Check for high EVAPORATOR APPROACH or CONDENSER APPROACH. Check SURGE/HOT GAS BYPASS parameters in OPTIONS screen.
124	**RUN CAPACITY LIMITED**	MANUAL GUIDE VANE TARGET	124->Run Capacity Limited: Manual Guide Vane Target.	TARGET GUIDE VANE POSITION has been forced in the COMPRESS screen. Select and RELEASE force to return to normal (automatic) operation.
125	**RUN CAPACITY LIMITED**	LOW DISCHARGE SUPERHEAT	No Alert message	Check for oil loss from compressor or excess oil charge. Check for excess refrigerant charge. Verify that the valves in the oil reclaim lines are open. Check oil reclaim strainers. Check ACTUAL SUPERHEAT in OVERRIDE screen.

*[LIMIT] is shown on the ICVC as the temperature, pressure, voltage, etc., set point predefined or selected by the operator as an override, alert, or alarm condition. [VALUE] is the actual pressure, temperature, voltage, etc., at which the control has recorded at the time of the fault condition. "Exceeded Limit" in Alarm or Alert messages may mean the value is above or below a threshold.

Table 16 — ICVC Primary and Secondary Messages and Custom Alarm/Alert Messages with Troubleshooting Guides (cont)

H. OUT-OF-RANGE SENSOR ALARMS

STATE	PRIMARY MESSAGE	SECONDARY MESSAGE	PRIMARY CAUSE	ADDITIONAL CAUSE/REMEDY
260	SENSOR FAULT	LEAVING CHILLED WATER	260->Sensor Fault: Check Leaving Chilled Water Sensor	Check sensor resistance or voltage drop against Table 17A or 17B. Check for proper wiring between LEAVING CHILLED WATER Temperature Sensor and CCM J4-3 and J4-4. Check for disconnected, grounded, or shorted wiring.
261	SENSOR FAULT	ENTERING CHILLED WATER	261->Sensor Fault: Check Entering Chilled Water Sensor	Check sensor resistance or voltage drop against Table 17A or 17B. Check for proper wiring between ENTERING CHILLED WATER Temperature Sensor and CCM J4-1 and J4-2. Check for disconnected, grounded, or shorted wiring.
262	SENSOR FAULT	CONDENSER PRESSURE	262->Sensor Fault: Check Condenser Pressure Sensor	Check CONDENSER PRESSURE transducer wiring. Confirm that 5 V reference signal is available between CCM J2-4 and J2-6. Check for disconnected, grounded, or shorted wiring. Check for condensation in transducer connector.
263	SENSOR FAULT	EVAPORATOR PRESSURE	263->Sensor Fault: Check Evaporator Pressure Sensor	Check EVAPORATOR PRESSURE transducer wiring. Confirm that 5 V reference signal is available between CCM J2-1 and J2-3. Check for disconnected, grounded, or shorted wiring. Check for condensation in transducer connector.
264	SENSOR FAULT	COMPRESSOR BEARING TEMP	264->Sensor Fault: Check Comp Thrust Brg Temp Sensor	Check sensor resistance or voltage drop against Table 17A or 17B. Check for proper wiring between COMP THRUST BRG TEMP Sensor and CCM J4-19 and J4-20. Check for disconnected, grounded, or shorted wiring.
265	SENSOR FAULT	COMPRESSOR MOTOR TEMP	265->Sensor Fault: Check Comp Motor Winding Temp Sensor	Check sensor resistance or voltage drop against Table 17A or 17B. Check for proper wiring between COMP MOTOR WINDING TEMP Sensor and CCM J4-23 and J4-24. Check for disconnected, grounded, or shorted wiring.
266	SENSOR FAULT	COMP DISCHARGE TEMP	266->Sensor Fault: Check Comp Discharge Temp Sensor	Check sensor resistance or voltage drop against Table 17A or 17B. Check for proper wiring between COMP DISCHARGE TEMP Sensor and CCM J4-17 and J4-18. Check for disconnected, grounded, or shorted wiring.
267	SENSOR FAULT	OIL SUMP TEMP	267->Sensor Fault: Check Oil Sump Temp Sensor	Check sensor resistance or voltage drop against Table 17A or 17B. Check for proper wiring between OIL SUMP TEMP and CCM J4-21 and J4-22. Check for disconnected, grounded, or shorted wiring.
268	SENSOR FAULT	COMP OIL PRESS DIFF	268->Sensor Fault: Check Oil Pump Delta P Sensor	Check Oil Sump Pressure and Oil Pump Discharge Pressure sensor wiring and accuracy. Confirm that 5 V reference signal is available between CCM J3-1 and J3-3 and J3-4 and J3-6. Check for disconnected, grounded, or shorted OIL PUMP DELTA P wiring.
269	SENSOR FAULT	CHILLED WATER FLOW	269->Sensor Fault: Check Chilled Water Delta P Sensor	Check CHILLED WATER DELTA P transducer wiring and accuracy. Check FLOW DELTA P DISPLAY setting in SETUP1 screen. Confirm that 5 V reference signal is available between CCM J3-13 and J3-15 and J3-16 and J3-18. Check for disconnected, grounded, or shorted wiring. If pressure transducers are not installed, check for presence of resistors and jumpers CCM terminals J3-13 through J3-18. See Chiller Controls Schematic if flow switches are used.
270	SENSOR FAULT	COND WATER FLOW	270->Sensor Fault: Check Cond Water Delta P Sensor	Check CONDENSER WATER DELTA P transducer wiring and accuracy. Check FLOW DELTA P DISPLAY setting in SETUP1 screen. Confirm that 5 V reference signal is available between CCM J3-19 and J3-21 and J3-22 and J3-24. Check for disconnected, grounded, or shorted wiring. If pressure transducers are not installed, check for presence of resistors and jumpers CCM terminals J3-19 through J3-24. See Chiller Controls Schematic if flow switches are used.
271	SENSOR FAULT	VFD SPEED OUT OF RANGE	271->Sensor Fault: Check Actual VFD Speed	Check 0 - 5 V DC input from VFD to ISM terminals J6-1 and J6-2. Check VFD speed feedback signal calibration. Check VFD configuration, jumpers, and dip switch settings. Check for disconnected, grounded, or shorted wiring.
272	SENSOR FAULT	EVAP REFRIG LIQUID TEMP	272->Sensor Fault: Check Evap Refrig Liquid Temp Sensor	Check sensor resistance or voltage drop against Table 17A or 17B. Check for proper wiring between EVAP REFRIG LIQUID TEMP Sensor and CCM J4-11 and J4-12. Check for disconnected, grounded, or shorted wiring.

Table 16 — ICVC Primary and Secondary Messages and Custom Alarm/Alert Messages with Troubleshooting Guides (cont)

I. CHILLER PROTECTIVE LIMIT FAULTS (cont)

ICVC FAULT STATE	PRIMARY MESSAGE	SECONDARY MESSAGE	PRIMARY CAUSE	ADDITIONAL CAUSE/REMEDY
227	PROTECTIVE LIMIT	OIL PRESS SENSOR FAULT	227->Oil Pump Delta P [VALUE] exceeded limit of [LIMIT]*	OIL PUMP DELTA P > 4 PSI when oil pump is off. Select OIL PUMP DELTA P in the COMPRESS screen to calibrate pressure transducers. Check Oil Sump Pressure and Oil Pump Discharge Pressure transducer wiring leading to CCM J3-1 through J3-6. Confirm that 5.0 V reference voltage is available between CCM J3-1 and J3-2 and CCM J3-4 and J3-6. Check power supply to oil pump. Check oil pump operation and isolation valves.
228	PROTECTIVE LIMIT	LOW OIL PRESSURE	228->Oil Pump Delta P [VALUE] exceeded limit of [LIMIT]*	Check oil level sight glasses on compressor base. Check for partially closed oil filter and oil reclaim isolation valves. Select OIL PUMP DELTA P in the COMPRESS screen to calibrate pressure transducers. Check Oil Sump Pressure and Oil Pump Discharge Pressure transducer wiring leading to CCM J3-1 through J3-6. Confirm that 5.0 V reference voltage is available between CCM J3-1 and J3-2 and CCM J3-4 and J3-6. Check power supply to oil pump fuses, 2C contactor, and oil pump. Check oil pump operation in CONTROLS TEST screen. Check oil filter. Check for foaming oil at start-up. Check oil pressure regulator valve.
229	PROTECTIVE LIMIT	LOW CHILLED WATER FLOW	229->Low Chilled Water Flow; Check Delta P Config and Calibration	Perform Chilled Water pump test in CONTROLS TEST screen. Check EVAP REFRIG LIQUID TEMP and LEAVING CHILLED WATER temperature sensor accuracy and wiring to CCM. Check chilled water valves, pumps, and strainers. Check EVAP REFRIG TRIPPOINT, EVAP APPROACH ALERT, EVAP FLOW DELTA P CUTOUT, and WATER FLOW VERIFY TIME settings. Check load resistors, optional water flow switches or water flow delta P transducer calibration and wiring to CCM J3-13 through J3-18. Check for 5.0 V reference voltage between CCM J3-13 and J3-15 and J3-16 and J3-18. Activate Pumpdown Mode in CONTROLS TEST screen before removing refrigerant charge.
230	PROTECTIVE LIMIT	LOW CONDENSER WATER FLOW	230->Low Condenser Water Flow; Check Delta P Config and Calibration	Perform Condenser Water pump test in CONTROLS TEST screen. Check CONDENSER PRESSURE transducer and LEAVING CONDENSER WATER temperature sensor accuracy and wiring. Check condenser water valves and strainers. Check COND PRESS OVERRIDE, COND APPROACH ALERT, COND FLOW DELTA P CUTOUT, and WATER FLOW VERIFY TIME settings. Check for CONDENSER PRESSURE > 165 PSIG. Check load resistors, optional water flow switches or water flow delta P transducer calibration and wiring to CCM terminals J3-19 to J3-24. Check for 5.0 V reference voltage between CCM J3-19 and J3-21 and J3-22 and J3-24.
231	PROTECTIVE LIMIT	HIGH DISCHARGE TEMP	231->Comp Discharge Temp [VALUE] exceeded Limit of [LIMIT]*	Check for closed compressor discharge isolation valve. Check if chiller was operating in surge conditions. Check COMP DISCHARGE TEMP sensor resistance or voltage drop. Check for proper wiring to CCM J4-17 and J4-18. Check for proper condenser flow and temperature. Check for proper inlet guide vane and optional diffuser actuator operation. Check for COMP DISCHARGE TEMP > 220 deg F. Check for fouled tubes, plugged water strainers, or noncondensibles in the condenser.
232	PROTECTIVE LIMIT	LOW REFRIGERANT TEMP	232->Evaporator Refrig Temp [VALUE] exceeded limit of [LIMIT]*.	Check for proper refrigerant charge. Check float valve operation. Check for closed condenser liquid line isolation valve. If problem occurs at high load, check for low condenser pressure which causes inadequate refrigerant flow through condenser flasc orifices. Check for proper chilled water flow and temperature. Confirm that condenser water enters bottom row of condenser tubes first, reversed condenser water flow may cause refrigerant to stack in the condenser. Check EVAPORATOR PRESSURE transducer and EVAP REFRIG LIQUID TEMP and LEAVING CHILLED WATER sensors. Check for division plate gasket bypass. Check for fouled tubes. Check pressure transducer and temperature sensor wiring to the CCM.

*[LIMIT] is shown on the ICVC as the temperature, pressure, voltage, etc., set point predefined or selected by the operator as an override, alert, or alarm condition. [VALUE] is the actual pressure, temperature, voltage, etc., at which the control tripped. "Exceeded Limit" in Alarm or Alert messages may mean the value is above or below a threshold.

Table 16 — ICVC Primary and Secondary Messages and Custom Alarm/Alert Messages with Troubleshooting Guides (cont)

I. CHILLER PROTECTIVE LIMIT FAULTS (cont)

ICVC FAULT STATE	PRIMARY MESSAGE	SECONDARY MESSAGE	PRIMARY CAUSE	ADDITIONAL CAUSE/REMEDY
233	PROTECTIVE LIMIT	HIGH MOTOR TEMPERATURE	233->Comp Motor Winding Temp [VALUE] exceeded limit of [LIMIT]*.	Check COMP MOTOR WINDING TEMP accuracy and wiring to CCM J4-23 and J4-24. Check motor cooling line and spray nozzle for proper operation, or restrictions. Check motor cooling filter/drier and isolation valves. Look for refrigerant flow through motor cooling line sight glass. Check for excessive starts within a short time span. Check temperature after switching to spare COMP MOTOR WINDING TEMP sensor.
234	PROTECTIVE LIMIT	HIGH BEARING TEMPERATURE	234->Comp Thrust Brg Temp [VALUE] exceeded limit of [LIMIT]*.	Check oil heater for proper operation, confirm that oil heater is de-energized when compressor is running. Check for low oil level, partially closed oil line isolation valves, or clogged oil filter. Check oil cooler refrigerant thermal expansion valves, confirm that expansion valve bulbs are secured to the oil lines and insulated. Check COMP THRUST BRNG TEMP sensor accuracy and wiring to CCM J4-19 and J4-20. Check temperature after switching to spare COMP THRUST BRNG TEMP sensor. This fault can result from excessive operation at low load with low water flow to the evaporator or condenser. Very high discharge and volute temperatures may increase the oil sump temperature. Elevated sump temperature may result from an excessively high oil level reaching the bottom of the bull gear causing it to churn the oil.
235	PROTECTIVE LIMIT	HIGH CONDENSER PRESSURE	235->Condenser Pressure [VALUE] exceeded limit of [LIMIT]*.	Check CONDENSER PRESSURE. Check for high Condenser Water temperatures, low water flow, fouled tubes. Check for division plate/gasket bypass or plugged condenser water strainers. Check for noncondensables in condenser. Check CONDENSER PRESSURE transducer wiring and accuracy to CCM J2-4 through J2-6. Configure COND PRESS OVERRIDE in SETUP1 screen. This Alarm is not caused by the High Condenser Pressure Switch.
236	PROTECTIVE LIMIT	COMPRESS SURGE/LOW SPEED	236->Compressor Surge: Check condenser water temp and flow	Surge prevention alarm declared before ACTUAL VFD SPEED reached 90%. Check for high CONDENSER PRESSURE, high Condenser Water temperatures, low water flow, fouled tubes. Check condenser water strainers. Check CONDENSER APPROACH. Check for division plate/gasket bypass. Check for noncondensables in condenser. Check surge prevention parameters in OPTIONS screen. Increase VFD INCREASE STEP in SETUP2. Check VFD MINIMUM SPEED in SETUP2 screen.
237	PROTECTIVE LIMIT	SPARE SAFETY DEVICE	237->Spare Safety Device	Spare safety input has tripped or factory installed jumper is not present on ISM J2-1 and J2-2.
238	PROTECTIVE LIMIT	EXCESSIVE COMPR SURGE	238->Compressor Surge: Check condenser water temp and flow	Five SURGE PROTECTION COUNTS occurred within SURGE TIME PERIOD. VFD Only: Surge prevention alarm declared when ACTUAL VFD SPEED is at least 90%. Check for high condenser water temperatures, low water flow, fouled tubes. Check CONDENSER APPROACH. Check condenser water strainers. Check for division plate/gasket bypass. Check for noncondensables in condenser. Check surge prevention parameters in OPTIONS screen. Compare cooling tower control settings and performance against design/selection temperatures across the entire operating range of the chiller. Check EVAPORATOR APPROACH and chilled water flow.
239	PROTECTIVE LIMIT	TRANSDUCER VOLTAGE FAULT	239->Transducer Voltage Ref [VALUE] exceeded limit of [LIMIT]*.	Check that TRANSDUCER VOLTAGE REF is between 4.5 V and 5.5 V in the CCM PRESSURE TRANSDUCERS screen. Check that none of the pressure transducers are shorted to ground. Confirm TRANSDUCER VOLTAGE REF by measuring voltage across a CCM Pressure Transducer (e.g. CCM J2-1 to J2-3). Check TRANSDUCER VOLTAGE REF after temporarily disconnecting chiller from CCN and disconnecting field wiring from CCM terminal blocks J5 and J8. This fault is normally declared the first time an ICVC is powered up if it was downloaded with software when it was not connected to a CCM. Check for 24V across CCM J1-1 and J1-2. Call Carrier Service.

*[LIMIT] is shown on the ICVC as the temperature, pressure, voltage, etc., set point predefined or selected by the operator as an override, alert, or alarm condition. [VALUE] is the actual pressure, temperature, voltage, etc., at which the control tripped. "Exceeded Limit" in Alarm or Alert messages may mean the value is above or below a threshold.

Table 16 — ICVC Primary and Secondary Messages and Custom Alarm/Alert Messages with Troubleshooting Guides (cont)

I. CHILLER PROTECTIVE LIMIT FAULTS (cont)

ICVC FAULT STATE	PRIMARY MESSAGE	SECONDARY MESSAGE	PRIMARY CAUSE	ADDITIONAL CAUSE/REMEDY
240	**PROTECTIVE LIMIT**	LOW DISCHARGE SUPERHEAT	240->Check for Oil in Refrigerant or Overcharge of Refrigerant.	Check ACTUAL SUPERHEAT and SUPERHEAT REQUIRED in OVERRIDE screen. Check the oil level in the compressor oil sump. Excessive oil in the evaporator may cause foaming and cause carryover into the compressor. The refrigerant level in the evaporator may be too low resulting in ineffective oil reclaim at low loads. If the chiller is overcharged, the oil reclaim may be recovering below the oil rich mixture on the top of the cooler refrigerant level. Excessive refrigerant charge may cause liquid carry over into compressor. Look for oil and refrigerant mixture flowing through both oil reclaim sight glasses. If the refrigerant charge is correct, inadequate oil reclaim may be caused by plugged oil reclaim eductors, plugged strainers, or closed isolation valves on the oil reclaim lines. Confirm that the oil reclaim eductors are installed correctly. Check calibration of EVAPORATOR PRESSURE and CONDENSER PRESSURE transducers. Check calibration and wiring of COMP DISCHARGE TEMP sensor to CCM J4-17 and J4-18.
241	**LOSS OF COMMUNICATION**	WITH STARTER MODULE	241->Loss of Communication With Starter.	SIO communications between the CCM and ISM have been lost for an excessive time period. Check wiring from ISM terminal J7 to CCM terminal J7. Check power and communication status LEDs on ISM.
242	**LOSS OF COMMUNICATION**	WITH CCM MODULE	242->Loss of Communication With CCM.	SIO communications between the ICVC and CCM have been lost for an excessive time period. Check wiring from CCM terminal J6 to ICVC terminal J7. Check power and communication status LEDs on CCM. Confirm that all CCM SW1 switches are in the "Off" position.
243	**POTENTIAL FREEZE-UP**	EVAP PRESS/TEMP TOO LOW	243->Evaporator Refrig Temp [VALUE] exceeded limit of [LIMIT]*.	Check CALC EVAP SAT TEMP, EVAP REFRIG LIQUID TEMP, and EVAP REFRIG TRIPPOINT. Check for proper refrigerant charge. Check float valve operation. Confirm that optional refrigerant liquid line isolation valve is open. Check for proper Chilled Water flow and temperature. Confirm that condenser water enters bottom row of condenser tubes first, reversed condenser water flow may cause refrigerant to stack in the condenser. Check EVAPORATOR PRESSURE transducer and EVAP REFRIG LIQUID TEMP sensor. Check for evaporator waterbox division plate gasket bypass. Check for fouled tubes.
244	**POTENTIAL FREEZE-UP**	COND PRESS/TEMP TOO LOW	244->Condenser Refrig Temp [VALUE] exceeded limit of [LIMIT]*.	Chiller is in Pumpdown/Lockout and the CONDENSER REFRIG TEMP is less than the CONDENSER FREEZE POINT. Check CONDENSER FREEZE POINT in SETUP1 screen. Condenser water too cold or chiller shut down with brine below 32 deg F in cooler so equalization temperature in chiller approached 32 def F. Check CONDENSER PRESSURE transducer and wiring to CCM J2-4 through J2-6. Check Condenser Water Temperature sensors and wiring to CCM J4. Check refrigerant charge.
245	**PROTECTIVE LIMIT**	HIGH VFD SPEED	245->Actual VFD Speed exceeded limit of Target VFD Speed + 10%.	ACTUAL VFD SPEED in COMPRESS screen has exceeded TARGET VFD SPEED by more than 10%. Check calibration of 0 - 5 volt VFD speed feedback signal to ISM J6-1 and J6-2.
246	**PROTECTIVE LIMIT**	INVALID DIFFUSER CONFIG	246->Diffuser Control Invalid Configuration: Check SETUP2 Entries	Check 23%, 50%, and 75% Guide Vane and Diffuser Load Point entries in SETUP2 screen against Diffuser Schedule Settings Label on the back of the Control Panel cover.
247	**PROTECTIVE LIMIT**	DIFFUSER POSITION FAULT	247->Diffuser Position Fault: Check Guide Vane and Diffuser Actuators	Confirm that DIFFUSER OPTION in SETUP 2 screen has not been Enabled if compressor does not have a split ring diffuser. May indicate rotating stall condition. Check DIFFUSER CONTROL Schedule in SETUP2 screen. Check DIFFUSER PRESSURE rotating stall transducer wiring to CCM J3-10, J3-11 and J3-12. Confirm that 4.3 kilohm load resistor is installed between CCM J3-7 and J3-8. Confirm that DIFFUSER PRESSURE transducer is secured to the threaded fitting on the compressor housing. Check for proper operation of diffuser and inlet guide vane actuators including inlet guide vane calibration. Check wiring between CCM J4-9 and J4-10 and the guide vane position feedback potentiometer. Check diffuser and guide vane actuator couplings for rotational slip. Check for electrical noise in CCM Diffuser Pressure wiring. Install noise suppressor in parallel with Motor Temperature sensor on CCM J4-23 and J4-24. Do not continue to operate compressor except for diagnostic purposes.

*[LIMIT] is shown on the ICVC as the temperature, pressure, voltage, etc., set point predefined or selected by the operator as an override, alert, or alarm condition. [VALUE] is the actual pressure, temperature, voltage, etc., at which the control tripped. "Exceeded Limit" in Alarm or Alert messages may mean the value is above or below a threshold.

Table 16 — ICVC Primary and Secondary Messages and Custom Alarm/Alert Messages with Troubleshooting Guides (cont)

I. CHILLER PROTECTIVE LIMIT FAULTS (cont)

ICVC FAULT STATE	PRIMARY MESSAGE	SECONDARY MESSAGE	PRIMARY CAUSE	ADDITIONAL CAUSE/REMEDY
248	**PROTECTIVE LIMIT**	SPARE TEMPERATURE #1	248->Spare Temperature #1 [VALUE] exceeded limit of [LIMIT]*.	Check component that SPARE TEMPERATURE #1 is monitoring. Check SPARE TEMP #1 ENABLE and SPARE TEMP #1 LIMIT in SETUP1 screen. Check SPARE TEMPERATURE #1 sensor resistance or voltage drop. Check SPARE TEMPERATURE #1 wiring to CCM J4-25 and J4-26.
249	**PROTECTIVE LIMIT**	SPARE TEMPERATURE #2	249->Spare Temperature #2 [VALUE] exceeded limit of [LIMIT]*.	Check component that SPARE TEMPERATURE #2 is monitoring. Check SPARE TEMP #2 ENABLE and SPARE TEMP #2 LIMIT in SETUP1 screen. Check SPARE TEMPERATURE #2 sensor resistance or voltage drop. Check SPARE TEMPERATURE #2 wiring to CCM J4-27 and J4-28.
250	**PROTECTIVE LIMIT**	REFRIGERANT LEAK SENSOR	250->Refrigerant Leak Sensor [VALUE] exceeded limit of [LIMIT]*	REFRIGERANT LEAK OPTION is Enabled and the REFRIGERANT LEAK SENSOR output exceeded REFRIGERANT LEAK ALARM mA. Check for refrigerant leaks. Check leak detector for proper operation. Check REFRIGERANT LEAK ALARM mA setting in the OPTIONS screen. Check 4-20 mA or 1-5 V output from refrigerant leak sensor to CCM J5-5 and J5-6. Confirm that CCM SW2 dip switch 1 is in the correct position.
251	**PROTECTIVE LIMIT**	ISM CONFIG CONFLICT	251->ISM Config Conflict; Verify and Save ISM Config Data to Reset	The ISM_CONF table stored in the ISM does not match that which is stored in the ICVC. This is a normal fault if an ICVC has been uploaded with software when it was not attached to the CCM. In order to recall parameters stored in the ISM: Enter ISM_CONF screen and then immediately exit ISM_CONF screen by pressing EXIT then CANCEL. Next, re-enter the ISM_CONF screen a second time so parameters stored in the ISM will be uploaded into the ICVC. Confirm that the settings in the ISM_CONF screen are correct. Press EXIT then SAVE to store the ISM_CONF screen settings in both the ICVC and ISM.
252	**Not Used**	Not Used	252->Not Used	
253	**PROTECTIVE LIMIT**	GUIDE VANE CALIBRATION	253->Guide Vane Fault [VALUE]. Check Calibration	Alarm before start indicates guide vane opening has not closed to less than 4%. Alarm while running indicates guide vane position is < -1% or > 103%, or feedback voltage between CCM J4-9 and J4-10 is < .045 or > 3.15 VDC. Enter CONTROL TEST and conduct Guide Vane Calibration. Check wiring between the guide vane feedback potentiometer and CCM terminals J4-9 and J4-10. Check the 10,000 ohm guide vane position feedback potentiometer.
254	**PROTECTIVE LIMIT**	HIGH COND WATER FLOW	254->High Flow: Condenser Water Delta P Limit (VALUE) exceeded limit of [LIMIT]*	COND HI FLOW ALARM OPT is enabled and CONDENSER WATER DELTA P has exceeded configured limit. Check FLOW DELTA P DISPLAY and COND HI FLOW DEL P LIMIT in SETUP1 screen. Check optional Condenser Water Pressure transducer wiring and accuracy. Confirm that 5 V reference signal is available between CCM J3-19 and J3-21 and J3-22 and J3-24. Check for disconnected, grounded, or shorted wiring. If condenser water pressure transducers are not installed, check for presence of resistors and jumpers CCM terminals J3-19 through J3-24. See Chiller Controls Schematic if flow switches are used.

*[LIMIT] is shown on the ICVC as the temperature, pressure, voltage, etc., set point predefined or selected by the operator as an override, alert, or alarm condition. [VALUE] is the actual pressure, temperature, voltage, etc., at which the control tripped. "Exceeded Limit" in Alarm or Alert messages may mean the value is above or below a threshold.

J. CHILLER ALERTS

STATE	PRIMARY MESSAGE	SECONDARY MESSAGE	PRIMARY CAUSE	ADDITIONAL CAUSE/REMEDY
140	**SENSOR ALERT**	LEAVING COND WATER TEMP	140->Sensor Fault: Check Leaving Cond Water Sensor	LEAVING CONDENSER WATER temperature sensor reading is out of range. Check LEAVING CONDENSER WATER sensor resistance or voltage drop. Check for proper wiring to CCM J4-7 and J4-8. Check for grounded sensor leads.
141	**SENSOR ALERT**	ENTERING COND WATER TEMP	141->Sensor Fault: Check Entering Cond Water Sensor	ENTERING CONDENSER WATER temperature sensor reading is out of range. Check LEAVING CONDENSER WATER sensor resistance or voltage drop. Check for proper wiring to CCM J4-7 and J4-8. Check for grounded sensor leads.
142	**LOW OIL PRESSURE ALERT**	CHECK OIL FILTER	142->Low Oil Pressure Alert. Check Oil Filter	Check for partially or closed shut-off valves. Check oil filter. Check oil pump and power supply. Check oil level. Check for foaming oil at start-up. Check Oil Sump Pressure and Oil Pump Discharge Pressure transducer accuracy and wiring to CCM J3-1 through J3-6.

*[LIMIT] is shown on the ICVC as the temperature, pressure, voltage, etc., set point predefined or selected by the operator as an override, alert, or alarm condition. [VALUE] is the actual pressure, temperature, voltage, etc., at which the control tripped. "Exceeded Limit" in Alarm or Alert messages may mean the value is above or below a threshold.

Table 16 — ICVC Primary and Secondary Messages and Custom Alarm/Alert Messages with Troubleshooting Guides (cont)

J. CHILLER ALERTS (cont)

STATE	PRIMARY MESSAGE	SECONDARY MESSAGE	PRIMARY CAUSE	ADDITIONAL CAUSE/REMEDY
143	**AUTORESTART PENDING**	LINE PHASE LOSS	143->Line Current Loss; Check ISM Fault History to Identify Phase	Any LINE VOLTAGE < 50% MOTOR RATED LINE VOLTAGE or there is an excessive difference between the smallest LINE CURRENT and the largest LINE CURRENT. AUTORESTART OPTION is Enabled, chiller is automatically restarting. Check the ISM_HIST screen. Check MOTOR RATED LINE VOLTAGE in ISM_CONF screen. Check phase to phase and phase to ground power distribution bus voltage. Check current transformer wiring leading to ISM terminal block J4 and line voltage wiring leading to ISM terminal block J3. Check wiring and hardware between building power supply and motor. Current imbalance may improve if power or motor leads are rotated in the same phase sequence. Consult power company. Medium voltage applications only: Check voltage potential transformers and VOLT TRANSFORMER RATIO in ISM_CONF screen.
144	**AUTORESTART PENDING**	LINE VOLTAGE DROPOUT	144->Single Cycle Line Voltage Dropout	Temporary loss of voltage. SINGLE CYCLE DROPOUT and AUTORESTART OPTION are Enabled, chiller is automatically restarting. Two LINE VOLTAGES < 50% MOTOR RATED LINE VOLTAGE. Check ISM_HIST screen. Disable Single Cycle Dropout in ISM_CONF screen. Monitor chiller utility power for disruptions. Consult power company.
145	**AUTORESTART PENDING**	HIGH LINE VOLTAGE	145>High Average Line voltage [VALUE]	High LINE VOLTAGE for an excessive amount of time. Check LINE VOLTAGE in ISM_HIST screen. AUTORESTART OPTION is Enabled, chiller is automatically restarting. Check MOTOR RATED LINE VOLTAGE and OVERVOLTAGE THRESHOLD in ISM_CONF screen. Check phase to phase and phase to ground line power. Consult power company. Medium voltage applications only: Check voltage potential transformers and VOLT TRANSFORMER RATIO in ISM_CONF screen. Check wiring to ISM J3-VL1, J3-VL2 and J3-VL3.
146	**AUTORESTART PENDING**	LOW LINE VOLTAGE	146->Low Average Line voltage [VALUE]	Low LINE VOLTAGE for an excessive amount of time. AUTORESTART OPTION is Enabled and chiller is automatically restarting. Check LINE VOLTAGE in ISM_HIST screen. Check MOTOR RATED LINE VOLTAGE and UNDERVOLTAGE THRESHOLD in ISM_CONF screen. Check phase to phase and phase to ground distribution bus voltage. Consult power company. Medium voltage applications only: Check voltage potential transformers and VOLT TRANSFORMER RATIO in ISM_CONF screen. Check wiring to ISM J3-VL1, J3-VL2 and J3-VL3.
147	**AUTORESTART PENDING**	STARTER MODULE RESET	147->Starter Module Power-On Reset When Running	AUTORESTART OPTION in OPTIONS screen is enabled and there was a temporary loss of 115 V ISM control voltage supply. Chiller will automatically restart when power is restored within acceptable limits. Check ISM_HIST screen. Check wiring leading to ISM terminals J1-LL1 and J1-LL2. Check control power circuit breaker, control power transformer and control power circuit fuses. Monitor chiller utility power for disruptions. Improve ISM ground connection, apply measures to reduce electrical noise to ISM. Consult power company.
148	**AUTORESTART PENDING**	POWER LOSS	148->Control Power-Loss When Running	AUTO RESTART OPTION in OPTIONS screen is Enabled and there was a temporary loss of 24 VAC power to the ICVC. The chiller will automatically restart when power is restored within acceptable limits. Check 115 VAC control power transformer. Check 24 VAC T2 transformer and wiring leading to ICVC terminals J1-4 and J1-5 . Check CB1 circuit breaker in the control panel. Check phase to phase and phase to ground utility power voltage. Monitor chiller utility power for disruptions. Consult power company.
149	**SENSOR ALERT**	HIGH DISCHARGE TEMP	149->Comp Discharge Temp [VALUE] Exceeded Limit of [LIMIT]*	Check for proper inlet guide vane and optional diffuser actuator operation. Check COMP DISCHARGE ALERT threshold. Check for proper condenser water flow and temperatures. Check for high lift or low load. Check for closed compressor discharge isolation valve. Check if chiller was operating in surge conditions. Check COMP DISCHARGE TEMP sensor resistance or voltage drop. Check for proper wiring to CCM J4-17 and J4-18. Check for proper inlet guide vane and optional diffuser actuator operation. Check for fouled tubes, plugged water strainers, or noncondensibles in the chiller.
150	**SENSOR ALERT**	HIGH BEARING TEMPERATURE	150->Comp Thrust Brg Temp [VALUE] exceeded limit of [LIMIT]*	Check oil heater for proper operation, confirm that oil heater is de-energized when compressor is running. Check COMP THRUST BRG ALERT threshold. Check for low oil level, partially closed oil line isolation valves, or clogged oil filter. Check oil cooler refrigerant thermal expansion valves, confirm that expansion valve bulbs are secured to the oil lines and insulated. Check COMP THRUST BRNG TEMP sensor accuracy and wiring to CCM J4-19 and J4-20. Check temperature after switching to spare COMP THRUST BRNG TEMP sensor. This fault can result from excessive operation at low load with low water flow to the evaporator or condenser.
151	**CONDENSER PRESSURE ALERT**	PUMP RELAY ENERGIZED	151->High Condenser Pressure [VALUE]: Pump Energized to Reduce Pressure.	Check for high Condenser Water temperatures, low water flow, fouled tubes. Check CONDENSER PRESSURE OVERRIDE threshold. Check for division plate/gasket bypass or plugged condenser water strainers. Check for noncondensables in condenser. Check CONDENSER PRESSURE transducer wiring and accuracy to CCM J2-4 through J2-6. This Alert is not caused by the High Pressure Switch.
152	**RECYCLE ALERT**	EXCESSIVE RECYCLE STARTS	152->Excessive recycle starts.	Chiller load is too low to keep compressor on line and there has been more than 5 starts in 4 hours. Increase chiller load, adjust hot gas bypass to open at a higher load, increase recycle RESTART DELTA T in SETUP1 Screen. Check hot gas bypass isolation valve position.
153	**no message: ALERT only**	no message; ALERT only	153->Lead/Lag Disabled: Duplicate Chiller Address; Check Configuration	Illegal chiller address configuration in LEADLAG screen. Lead chiller, lag chiller, and optional standby chiller must all be on the same bus but they must all be assigned a different address in the ICVC CONFIGURATION screen.

*[LIMIT] is shown on the ICVC as the temperature, pressure, voltage, etc., set point predefined or selected by the operator as an override, alert, or alarm condition. [VALUE] is the actual pressure, temperature, voltage, etc., at which the control tripped. "Exceeded Limit" in Alarm or Alert messages may mean the value is above or below a threshold.

Table 16 — ICVC Primary and Secondary Messages and Custom Alarm/Alert Messages with Troubleshooting Guides (cont)

J. CHILLER ALERTS (cont)

STATE	PRIMARY MESSAGE	SECONDARY MESSAGE	PRIMARY CAUSE	ADDITIONAL CAUSE/REMEDY
154	POTENTIAL FREEZE-UP	COND PRESS/ TEMP TOO LOW	154->Condenser freeze up prevention	The chiller is not in Pumpdown Mode and the CONDENSER REFRIG TEMP is less than the CONDENSER FREEZE POINT. The CONDENSER PRESSURE transducer is reading a pressure that could freeze the condenser tubes. Check CONDENSER FREEZE POINT in SETUP1 screen. Check for condenser refrigerant leaks. Check CONDENSER PRESSURE transducer and wiring to CCM J2-4 through J2-6. Check Condenser Water Temperature sensors and wiring to CCM J4. Place the chiller in PUMPDOWN mode if the vessel is evacuated. Condenser water too cold or chiller shut down with brine below 32 F in cooler so equalization temperature in chiller approached 32 F.
155	OPTION SENSOR FAULT	REMOTE RESET SENSOR	155->Sensor Fault/Option Disabled: Remote Reset Sensor	Type 2 Temperature Reset is Enabled and Remote Temperature Reset sensor is out of range. Check ENABLE RESET TYPE and TEMPERATURE RESET settings in TEMP_CNTL screen. Check Remote Temperature Reset sensor resistance or voltage drop. Check for proper wiring to CCM J4-13 and J4-14.
156	OPTION SENSOR FAULT	AUTO CHILLED WATER RESET	156->Sensor Fault/Option Disabled: Auto Chilled Water Reset	Type 1 Temperature Reset is Enabled and Auto Chilled Water Reset input on CCM J5-3 and J5-4 is < 2 mA. Check ENABLE RESET TYPE and TEMPERATURE RESET settings in TEMP_CNTL screen. Confirm that Auto Chilled Water Reset input is between 4 mA and 20 mA. Confirm that wiring to CCM J5-3 and J5-4 is not grounded.
157	OPTION SENSOR FAULT	AUTO DEMAND LIMIT INPUT	157->Sensor Fault/Option Disabled: Auto Demand Limit Input	20mA DEMAND LIMIT OPT is Enabled, Ice Build is not Active, and Auto Demand Limit Input on CCM J5-1 and J5-2 is < 2 mA. Check 20 mA DEMAND LIMIT OPT and DEMAND LIMIT AT 20 mA in RAMP_DEM screen. Confirm that Auto Demand Limit Input is between 4 mA and 20 mA. Confirm that wiring to CCM J5-1 and J5-2 is not grounded.
158	SENSOR ALERT	SPARE TEMPERATURE #1	158->Spare Temperature #1 [VALUE] exceeded limit of [LIMIT].*	Check component that SPARE TEMPERATURE #1 is monitoring. Check SPARE TEMP #1 ENABLE and SPARE TEMP #1 LIMIT in SETUP1 screen. Check SPARE TEMPERATURE #1 sensor resistance or voltage drop. Check SPARE TEMPERATURE #1 wiring to CCM J4-25 and J4-26.
159	SENSOR ALERT	SPARE TEMPERATURE #2	159->Spare Temperature #2 [VALUE] exceeded limit of [LIMIT].*	Check component that SPARE TEMPERATURE #2 is monitoring. Check SPARE TEMP #2 ENABLE and SPARE TEMP #2 LIMIT in SETUP1 screen. Check SPARE TEMPERATURE #2 sensor resistance or voltage drop. Check SPARE TEMPERATURE #2 wiring to CCM J4-27 and J4-28.
160	Not Used	Not Used	160->Not Used	
161	LOSS OF COMMUNICATION	WITH WSM	161->WSM Cool Source - Loss of Communication	Check settings in WSMDEFME screen. Check CCN communications link with WSM (Water System Manager) Module. Check Supervisory Part of WSM.
162	SENSOR ALERT	EVAPORATOR APPROACH	162->Evaporator Approach [VALUE] Exceeded Limit of [LIMIT]*	Check EVAP APPROACH ALERT setting in SETUP1 screen. Check Evaporator Water Flow. Check EVAP REFRIG LIQUID TEMP and LEAVING CHILLED WATER temperature sensor resistances and voltage drop. Check EVAP REFRIG LIQUID TEMP and LEAVING CHILLED WATER temperature sensor wiring to the J4 CCM terminal block. Check for oil loss or low refrigerant charge. Check oil reclaim line isolation valves and strainers. Confirm that the optional refrigerant Liquid Line Isolation Valve is open. Check for float valve operation and for refrigerant stacking in the condenser. Check chilled water valves and strainers. Check for air in the evaporator waterbox or division plate bypass. Check for fouled tubes. Confirm that the oil reclaim system is working.
163	SENSOR ALERT	CONDENSER APPROACH	163->Condenser Approach [VALUE] Exceeded Limit of [LIMIT]*	Check COND APPROACH ALERT setting in SETUP1 screen. Check Condenser Water Flow. Check CONDENSER PRESSURE transducer and LEAVING CONDENSER WATER temperature sensor resistance or voltage drop. Check condenser shell temperature against condenser pressure measured with a refrigerant gage for evidence of non-condensibles in refrigerant charge. Check for condenser waterbox division plate bypass. Check CONDENSER PRESSURE transducer and LEAVING CONDENSER WATER sensor wiring to the CCM. Check for air in the condenser waterbox. Confirm that the condenser tubes are not fouled.
164	VFD SPEED ALERT	LOW VFD SPEED	164->Actual VFD Speed exceeded limit of Target VFD Speed -10%	ACTUAL VFD SPEED in COMPRESS screen must be at least 90% of TARGET VFD SPEED. Check wiring and calibration of 4 - 20 mA speed control signal from ISM J8-1 and J8-2 to the VFD. Check VFD configuration parameters, jumpers, and dip switch settings.
165	MACHINE ALERT	HIGH COND WATER FLOW	165->High Flow: Condenser Water Delta P [VALUE] Exceeded Limit of [LIMIT]*	COND HI FLOW ALARM OPT is disabled and CONDENSER WATER DELTA P has exceeded configured limit. Check FLOW DELTA P DISPLAY and COND HI FLOW DEL P LIMIT in SETUP1 screen. Check optional condenser water pressure transducer wiring and accuracy. Confirm that 5 V reference signal is available between CCM J3-19 and J3-21 and J3-22 and J3-24. Check for disconnected, grounded, or shorted wiring. If pressure transducers are not installed, check for presence of resistors and jumpers CCM terminals J3-19 through J3-24. See Chiller Controls Schematic if flow switches are used.

*[LIMIT] is shown on the ICVC as the temperature, pressure, voltage, etc., set point predefined or selected by the operator as an override, alert, or alarm condition. [VALUE] is the actual pressure, temperature, voltage, etc., at which the control tripped. "Exceeded Limit" in Alarm or Alert messages may mean the value is above or below a threshold.

Table 16 — ICVC Primary and Secondary Messages and Custom Alarm/Alert Messages with Troubleshooting Guides (cont)

K. ISM ALARMS

ICVC FAULT STATE	PRIMARY MESSAGE	SECONDARY MESSAGE	PRIMARY CAUSE	ADDITIONAL CAUSE/REMEDY
200	PROTECTIVE LIMIT	1M CONTACT FAULT	200->1M Aux Contact Fault; Check 1M Contactor and Aux	1M aux contact is open when it should be closed during start or run mode. Confirm starter 1M aux contact closes when ISM 1CR contact closes and terminal J9-2 is energized with 115V. Check wiring leading to ISM J2-9 and J2-10. Check MOTOR RATED LOAD AMPS in ISM_CONF screen. Wye-Delta Starters: Check for failed or incomplete transition. Check S-2M mechanical interlock operation.
201	PROTECTIVE LIMIT	2M CONTACT FAULT	201->2M Aux Contact Fault; Check 2M Contactor and Aux	2M aux contact closure was delayed after 1M has closed. Confirm starter 2M aux contact closes following the 1M aux contact closure and the starter energizes the motor. Check wiring leading to ISM J2-11 and J2-12. Check MOTOR RATED LOAD AMPS and confirm that the correct STARTER TYPE has been selected in the ISM_CONF screen. Wye Delta Starters Only: Check wiring from ISM J9-4 to transition contactor.
202	PROTECTIVE LIMIT	MOTOR AMPS NOT SENSED	202->Motor Amps Not Sensed — Average Line Current [VALUE]	The ISM has not sensed sufficient current for an excessive delay after 1M has closed. Check the MOTOR CURRENT CT RATIO and the MOTOR RATED LOAD AMPS in the ISM_CONF screen. Check VFD OPTION in SETUP 2 screen. Check for wiring of current transformers to the J4 ISM terminals. Check if main circuit breaker has tripped. Check ISM_HIST screen
203	FAILURE TO START	EXCESS ACCELERATION TIME	203->Motor Acceleration Fault - Average Line Current [VALUE]	Any line current remains high for an excessive time duration following 1M aux and either 2M aux or transition contact closure. Check that inlet guide vanes are fully closed at start up. Check ISM_HIST screen. Check Motor Rated Load Amps in ISM_CONF screen. Reduce condenser pressure if possible.
204	FAILURE TO STOP	1M/2M CONTACT FAULT	204->1M/2M Aux Contact Stop Fault; Check 1M/2M Contactors and Aux	The 1M aux or 2M aux contacts are closed during power up or the 1M aux or 2M aux contacts remain closed for an excessive delay following a STOP command. Check wiring and dry contacts leading to ISM J2-9 and J2-10 and J2-11 and J2-12.
205	FAILURE TO STOP	MOTOR AMPS WHEN STOPPED	205->Motor Amps When Stopped - Average Line Current [VALUE]	High line current measured on any phase after power up or STOP command. Check the MOTOR CURRENT CT RATIO and the MOTOR RATED LOAD AMPS in the ISM_CONF screen. Check VFD OPTION in SETUP 2 screen. Check ISM_HIST screen. Check for high inrush current during power-up. Confirm that the starter de-energizes the motor when the ISM removes 115V from ISM J9-2. Confirm that the correct STARTER TYPE has been selected in the ISM_CONF screen.
206	PROTECTIVE LIMIT	STARTER FAULT	206->Starter Fault Cutout; Check Optional Starter Contacts	The ISM has received a start command and the starter has declared a Fault. The dry contacts connected to ISM J2-7 and J2-8 are open. See starter display for starter Fault Code. For Benshaw Inc. RediStart starters, view RediStart MICRO display. For VFD, check VFD display Fault History. Clear VFD faults with VFD keypad. For Allen-Bradley wye delta starters with RLA $\geq$ 718 A, the TR3 timer may have expired as a result of a delayed transition.
207	PROTECTIVE LIMIT	HIGH CONDENSER PRESSURE	207->High Cond Pressure Cutout. [VALUE] exceeded limit of [LIMIT]*	Check Compressor Discharge High Pressure switch wiring and accuracy. Check for high condenser water temperatures, low water flow, fouled tubes. Check for division plate/gasket bypass. Check for noncondensables in refrigerant. If [Value] is less that [Limit], the 1M aux contact was open for an excessive time following a start command. Check High Pressure Relay contacts and 115 V wiring leading to ISM J9-1. Verify that 115 VAC is present on J9-1 with oil pump on. Check 115 V wiring leading from ISM J9-2 to the 1M aux coil and base. Check for 115 VAC at 1M coil during a startup attempt. Check the 24V circuit leading from power panel terminal 50 to the 2C aux contact and High Pressure Switch. Check the 24V circuit leading from power panel terminals 17 and 43 leading to the High Pressure Relay coil and base.
208	PROTECTIVE LIMIT	EXCESSIVE MOTOR AMPS	208->Average Line Current [VALUE] exceeded limit of [LIMIT]*.	AVERAGE LINE CURRENT > 110% for an excessive amount of time. Check MOTOR RATED LOAD AMPS and MOTOR CURRENT CT RATIO in ISM_CONF time. Check ISM_HIST screen. Check for conditions that cause excessive lift. Check guide vane actuator for proper operation. Confirm that guide vanes will fully close prior to start-up.

*[LIMIT] is shown on the ICVC as the temperature, pressure, voltage, etc., set point predefined or selected by the operator as an override, alert, or alarm condition. [VALUE] is the actual pressure, temperature, voltage, etc., at which the control tripped. "Exceeded Limit" in Alarm or Alert messages may mean the value is above or below a threshold.

Table 16 — ICVC Primary and Secondary Messages and Custom Alarm/Alert Messages with Troubleshooting Guides (cont)

K. ISM ALARMS (cont)

ICVC FAULT STATE	PRIMARY MESSAGE	SECONDARY MESSAGE	PRIMARY CAUSE	ADDITIONAL CAUSE/REMEDY
209	**PROTECTIVE LIMIT**	LINE PHASE LOSS	209->Line Phase Loss; Check ISM Fault History to Identify Phase	Any LINE VOLTAGE < 50% MOTOR RATED LINE VOLTAGE or there is an excessive difference between the smallest LINE CURRENT and the largest LINE CURRENT. Check the ISM_HIST screen. Check MOTOR RATED LINE VOLTAGE in ISM_CONF screen. Check phase to phase and phase to ground power distribution bus voltage. Check current transformer wiring leading to ISM terminal block J4 and line voltage wiring leading to ISM terminal block J3. Check wiring and hardware between building power supply and motor. Current imbalance may improve if power or motor leads are rotated in the same phase sequence. Consult power company. Medium voltage applications only: Check voltage potential transformers and VOLT TRANSFORMER RATIO in ISM_CONF screen.
210	**PROTECTIVE LIMIT**	LINE VOLTAGE DROPOUT	210->Single Cycle Line Voltage Dropout	Temporary loss of voltage. SINGLE CYCLE DROPOUT in the ISM_CONF screen is Enabled and two LINE VOLTAGES < 50% MOTOR RATED LINE VOLTAGE. Check ISM_HIST screen. Disable Single Cycle Dropout in ISM_CONF screen.
211	**PROTECTIVE LIMIT**	HIGH LINE VOLTAGE	211->High Average Line Voltage [VALUE]	High LINE VOLTAGE for an excessive amount of time. Check LINE VOLTAGE in ISM_HIST screen. Check MOTOR RATED LINE VOLTAGE and OVERVOLTAGE THRESHOLD in ISM_CONF screen. Check phase to phase and phase to ground distribution bus voltage. Consult power company. Medium voltage applications only: Check voltage potential transformers and VOLT TRANSFORMER RATIO in ISM_CONF screen. Check wiring to ISM J3-VL1, J3-VL2 and J3-VL3.
212	**PROTECTIVE LIMIT**	LOW LINE VOLTAGE	212->Low Average Line Voltage [VALUE]	Low LINE VOLTAGE for an excessive amount of time. Check LINE VOLTAGE in ISM_HIST screen. Check MOTOR RATED LINE VOLTAGE and UNDERVOLTAGE THRESHOLD in ISM_CONF screen. Check phase to phase and phase to ground distribution bus voltage. Check connections to ISM terminal block J3. Consult power company. Medium voltage applications only: Check voltage potential transformers and VOLT TRANSFORMER RATIO in ISM_CONF screen. Check wiring to ISM J3-VL1, J3-VL2 and J3-VL3.
213	**PROTECTIVE LIMIT**	STARTER MODULE RESET	213->Starter Module Power-On Reset When Running	AUTO RESTART OPTION in OPTIONS screen is disabled and there was a temporary loss of 115 V ISM control voltage supply. Check ISM_HIST screen. Check wiring leading to ISM terminals J1-LL1 and J1-LL2. Check control power circuit breaker, control power transformer and control power circuit fuses. Monitor chiller utility power for disruptions. Improve ISM ground connection, apply measures to reduce electrical noise to ISM. Consult power company.
214	**PROTECTIVE LIMIT**	POWER LOSS	214->Control Power - Loss When Running	AUTO RESTART OPTION in OPTIONS screen is disabled and there was a temporary loss of 24 VAC power to the ICVC. Check 115 VAC control power transformer. Check 24 VAC T2 transformer and wiring leading to ICVC terminals J1-4 and J1-5 . Check CB1 circuit breaker in the control panel. Check phase to phase and phase to ground distribution bus voltage. Monitor chiller utility power for disruptions. Consult power company.
215	**PROTECTIVE LIMIT**	LINE CURRENT IMBALANCE	215->Line Current Imbalance;Check ISM Fault History to Identify Phase	Current imbalance > CURRENT % IMBALANCE for greater than the CURRENT IMBALANCE TIME. Check settings in ISM_CONF screen. Check ISM_HIST screen. Check current transformer wiring leading to ISM terminal block J4. Verify phase to phase and phase to ground line voltage. Check wiring and hardware between building power supply and motor. Current imbalance may improve if power or motor leads are rotated in the same phase sequence.
216	**PROTECTIVE LIMIT**	LINE VOLTAGE IMBALANCE	216->Line Voltage Imbalance; Check ISM Fault History to Identify Phase.	Voltage Imbalance > VOLTAGE % IMBALANCE for greater than the VOLTAGE IMBALANCE TIME. Check settings in ISM_CONF screen. Check ISM_HIST screen. Check line voltage wiring leading to ISM terminal block J3. Verify phase to phase and phase to ground line voltage. Check wiring and hardware between building power supply and motor.

*[LIMIT] is shown on the ICVC as the temperature, pressure, voltage, etc., set point predefined or selected by the operator as an override, alert, or alarm condition. [VALUE] is the actual pressure, temperature, voltage, etc., at which the control tripped. "Exceeded Limit" in Alarm or Alert messages may mean the value is above or below a threshold.

Table 16 — ICVC Primary and Secondary Messages and Custom Alarm/Alert Messages with Troubleshooting Guides (cont)

K. ISM ALARMS (cont)

ICVC FAULT STATE	PRIMARY MESSAGE	SECONDARY MESSAGE	PRIMARY CAUSE	ADDITIONAL CAUSE/REMEDY
217	**PROTECTIVE LIMIT**	MOTOR OVERLOAD TRIP	217->Motor Overload Trip; Check ISM Configurations	Any phase current > 108% RLA for excessive time period. Alarm can result from significant load side current imbalance when running at full load. Check ISM_HIST screen. Check entering condenser water temperature and water flow rate. Check MOTOR RATED LOAD AMPS and STARTER LRA RATING in ISM_CONF screen. VFD applications only: Any phase current > 120% for excessive time period.
218	**PROTECTIVE LIMIT**	MOTOR LOCKED ROTOR TRIP	218->Motor Locked Rotor Amps Exceeded;Check Motor and ISM Config	Any LINE CURRENT > MOTOR LOCKED ROTOR TRIP for excessive time while running after the LOCKED ROTOR START DELAY has expired. Check MOTOR LOCKED ROTOR TRIP and MOTOR CURRENT CT RATIO in ISM_CONF screen. Check motor nameplate data. Check ISM_HIST screen. Check motor wiring and motor winding resistance. Temporarily enable SINGLE CYCLE DROP OUT to capture power disturbances.
219	**PROTECTIVE LIMIT**	STARTER LOCK ROTOR TRIP	219->Starter Locked Rotor Amps Rating Exceeded	Any LINE CURRENT > STARTER LRA RATING. Check STARTER LRA RATING and MOTOR CURRENT CT RATIO in ISM_CONF screen. Check ISM_HIST screen. Check starter label data. Check motor wiring and motor winding resistance.
220	**PROTECTIVE LIMIT**	GROUND FAULT	220->Ground Fault Trip; Check Motor and Current Transformers	Any GROUND FAULT current > GROUND FAULT CURRENT threshold for a duration > GROUND FAULT PERSISTENCE after the GROUND FAULT START DELAY has expired. Check these settings and GROUND FAULT CT RATIO in ISM_CONF screen. Check ISM_HIST screen. Confirm that ground fault current transformer orientation is correct and that the correct motor leads have been routed through the ground fault current transformers in the right direction. Check for condensation on motor terminals or inside of motor leads. Check motor power leads for phase to phase or phase to ground shorts. Disconnect motor from starter and megger motor windings to ground and phase to phase. Call Carrier Service.
221	**PROTECTIVE LIMIT**	PHASE REVERSAL TRIP	221-> Phase Reversal Trip; Check Power Supply	The ISM has detected that the input power is phased BAC instead of ABC. Confirm that the phase sequence wired to ISM terminal block J3 is consistent with the power wiring to the starter. Swap two power leads at the starter.
222	**PROTECTIVE LIMIT**	LINE FREQUENCY TRIP	222->Line Frequency - [VALUE] exceeded limit of [LIMIT]*; Check Power Supply.	LINE FREQUENCY FAULTING in ISM_CONF screen is enabled and the LINE FREQUENCY has deviated approximately 7% from nominal value. Check ISM_HIST screen. Check FREQUENCY = 60 HZ? In ISM_CONF screen. Check line frequency. If operating from a generator, check generator size and speed.
223	**PROTECTIVE LIMIT**	STARTER MODULE FAILURE	223->Starter Module Hardware Failure	Internal ISM power supply is outputting incorrect voltage. Check ISM status lights. Confirm that 115 V is applied to terminals J1-LL1 and J1-LL2. Confirm that excessive voltage has not been improperly applied to any of the ISM terminals before installing replacement ISM.
224	**PROTECTIVE LIMIT**	1CR START CIRCUIT FAULT	224->Check 115v Wiring to 1CR (ISM) and to 1M Coil	The 1M aux contact is open for an excessive time following a start command and the CONDENSER PRESSURE < 160 PSI. Check High Pressure Relay contacts and 115 V wiring leading to ISM J9-1. Check 115 V wiring leading from ISM J9-2 to the 1M aux coil and base. Check the 24V circuit leading from power panel terminal 50 to the 2C aux contact and High Pressure Switch. Check the 24V circuit leading from power panel terminals 17 and 43 leading to the High Pressure Relay coil and base.

*[LIMIT] is shown on the ICVC as the temperature, pressure, voltage, etc., set point predefined or selected by the operator as an override, alert, or alarm condition. [VALUE] is the actual pressure, temperature, voltage, etc., at which the control tripped. "Exceeded Limit" in Alarm or Alert messages may mean the value is above or below a threshold.

Table 17A — Thermistor Temperature (F) vs. Resistance/Voltage Drop

TEMPERATURE (F)	PIC II VOLTAGE DROP (V)	RESISTANCE (Ohms)
–25	4.700	97,706
–24	4.690	94,549
–23	4.680	91,474
–22	4.670	88,480
–21	4.659	85,568
–20	4.648	82,737
–19	4.637	79,988
–18	4.625	77,320
–17	4.613	74,734
–16	4.601	72,229
–15	4.588	69,806
–14	4.576	67,465
–13	4.562	65,205
–12	4.549	63,027
–11	4.535	60,930
–10	4.521	58,915
–9	4.507	56,981
–8	4.492	55,129
–7	4.477	53,358
–6	4.461	51,669
–5	4.446	50,062
–4	4.429	48,536
–3	4.413	47,007
–2	4.396	45,528
–1	4.379	44,098
0	4.361	42,715
1	4.344	41,380
2	4.325	40,089
3	4.307	38,843
4	4.288	37,639
5	4.269	36,476
6	4.249	35,354
7	4.229	34,270
8	4.209	33,224
9	4.188	32,214
10	4.167	31,239
11	4.145	30,298
12	4.123	29,389
13	4.101	28,511
14	4.079	27,663
15	4.056	26,844
16	4.033	26,052
17	4.009	25,285
18	3.985	24,544
19	3.960	23,826
20	3.936	23,130
21	3.911	22,455
22	3.886	21,800
23	3.861	21,163
24	3.835	20,556
25	3.808	19,967
26	3.782	19,396
27	3.755	18,843
28	3.727	18,307
29	3.700	17,787
30	3.672	17,284
31	3.644	16,797
32	3.617	16,325
33	3.588	15,868
34	3.559	15,426
35	3.530	14,997
36	3.501	14,582
37	3.471	14,181
38	3.442	13,791
39	3.412	13,415
40	3.382	13,050
41	3.353	12,696
42	3.322	12,353
43	3.291	12,021
44	3.260	11,699
45	3.229	11,386
46	3.198	11,082
47	3.167	10,787
48	3.135	10,500
49	3.104	10,221
50	3.074	9,949
51	3.042	9,689
52	3.010	9,436
53	2.978	9,190
54	2.946	8,951
55	2.914	8,719
56	2.882	8,494
57	2.850	8,275
58	2.819	8,062
59	2.788	7,855
60	2.756	7,655
61	2.724	7,460
62	2.692	7,271
63	2.660	7,088
64	2.628	6,909
65	2.596	6,736
66	2.565	6,568
67	2.533	6,405
68	2.503	6,246
69	2.472	6,092
70	2.440	5,942
71	2.409	5,796
72	2.378	5,655
73	2.347	5,517
74	2.317	5,382
75	2.287	5,252
76	2.256	5,124
77	2.227	5,000
78	2.197	4,880
79	2.167	4,764
80	2.137	4,650
81	2.108	4,539
82	2.079	4,432
83	2.050	4,327
84	2.021	4,225
85	1.993	4,125
86	1.965	4,028
87	1.937	3,934
88	1.909	3,843
89	1.881	3,753
90	1.854	3,667
91	1.827	3,582
92	1.800	3,500
93	1.773	3,420
94	1.747	3,342
95	1.721	3,266
96	1.695	3,192
97	1.670	3,120
98	1.644	3,049
99	1.619	2,981
100	1.595	2,914
101	1.570	2,849
102	1.546	2,786
103	1.523	2,724
104	1.499	2,663
105	1.476	2,605
106	1.453	2,547
107	1.430	2,492
108	1.408	2,437
109	1.386	2,384
110	1.364	2,332
111	1.343	2,282
112	1.321	2,232
113	1.300	2,184
114	1.279	2,137
115	1.259	2,092
116	1.239	2,047
117	1.219	2,003
118	1.200	1,961
119	1.180	1,920
120	1.161	1,879
121	1.143	1,840
122	1.124	1,801
123	1.106	1,764
124	1.088	1,727
125	1.070	1,691
126	1.053	1,656
127	1.036	1,622
128	1.019	1,589
129	1.002	1,556
130	0.986	1,524
131	0.969	1,493
132	0.953	1,463
133	0.938	1,433
134	0.922	1,404
135	0.907	1,376
136	0.893	1,348
137	0.878	1,321
138	0.864	1,295
139	0.849	1,269
140	0.835	1,244
141	0.821	1,219
142	0.808	1,195
143	0.795	1,172
144	0.782	1,149
145	0.769	1,126
146	0.756	1,104
147	0.744	1,083
148	0.731	1,062
149	0.719	1,041
150	0.707	1,021
151	0.696	1,002
152	0.684	983
153	0.673	964
154	0.662	945
155	0.651	928
156	0.640	910
157	0.630	893
158	0.619	876
159	0.609	859
160	0.599	843
161	0.589	827
162	0.579	812
163	0.570	797
164	0.561	782
165	0.551	768
166	0.542	753
167	0.533	740
168	0.524	726
169	0.516	713
170	0.508	700
171	0.499	687
172	0.491	675
173	0.484	663
174	0.476	651
175	0.468	639
176	0.460	628
177	0.453	616
178	0.445	605
179	0.438	595
180	0.431	584
181	0.424	574
182	0.418	564
183	0.411	554
184	0.404	544
185	0.398	535
186	0.392	526
187	0.385	516
188	0.379	508
189	0.373	499
190	0.367	490
191	0.361	482
192	0.356	474
193	0.350	466
194	0.344	458
195	0.339	450
196	0.333	442
197	0.328	435
198	0.323	428
199	0.318	421
200	0.313	414
201	0.308	407
202	0.304	400
203	0.299	393
204	0.294	387
205	0.290	381
206	0.285	374
207	0.281	368
208	0.277	362
209	0.272	356
210	0.268	351
211	0.264	345
212	0.260	339
213	0.256	334
214	0.252	329
215	0.248	323
216	0.245	318
217	0.241	313
218	0.237	308
219	0.234	303
220	0.230	299
221	0.227	294
222	0.224	289
223	0.220	285
224	0.217	280
225	0.214	276
226	0.211	272
227	0.208	267
228	0.205	263
229	0.203	259
230	0.198	255
231	0.195	251
232	0.192	248
233	0.190	244
234	0.187	240
235	0.184	236
236	0.182	233
237	0.179	229
238	0.176	226
239	0.174	223
240	0.172	219
241	0.169	216
242	0.167	213
243	0.164	210
244	0.162	207
245	0.160	204
246	0.158	201
247	0.155	198
248	0.153	195

Table 17B — Thermistor Temperature (C) vs. Resistance/Voltage Drop

TEMPERATURE (C)	PIC II VOLTAGE DROP (V)	RESISTANCE (Ohms)
–33	4.722	105 616
–32	4.706	99 640
–31	4.688	93 928
–30	4.670	88 480
–29	4.650	83 297
–28	4.630	78 377
–27	4.608	73 722
–26	4.586	69 332
–25	4.562	65 205
–24	4.538	61 343
–23	4.512	57 745
–22	4.486	54 411
–21	4.458	51 341
–20	4.429	48 536
–19	4.399	45 819
–18	4.368	43 263
–17	4.336	40 858
–16	4.303	38 598
–15	4.269	36 476
–14	4.233	34 484
–13	4.196	32 613
–12	4.158	30 858
–11	4.119	29 211
–10	4.079	27 663
–9	4.037	26 208
–8	3.994	24 838
–7	3.951	23 545
–6	3.906	22 323
–5	3.861	21 163
–4	3.814	20 083
–3	3.765	19 062
–2	3.716	18 097
–1	3.667	17 185
0	3.617	16 325
1	3.565	15 513
2	3.512	14 747
3	3.459	14 023
4	3.406	13 341
5	3.353	12 696
6	3.298	12 087
7	3.242	11 510
8	3.185	10 963
9	3.129	10 444
10	3.074	9 949
11	3.016	9 486
12	2.959	9 046
13	2.901	8 628
14	2.844	8 232
15	2.788	7 855
16	2.730	7 499
17	2.672	7 160
18	2.615	6 839
19	2.559	6 535
20	2.503	6 246
21	2.447	5 972
22	2.391	5 711
23	2.335	5 463
24	2.280	5 226
25	2.227	5 000
26	2.173	4 787
27	2.120	4 583
28	2.067	4 389
29	2.015	4 204
30	1.965	4 028
31	1.914	3 861
32	1.865	3 701
33	1.816	3 549
34	1.768	3 404
35	1.721	3 266
36	1.675	3 134
37	1.629	3 008
38	1.585	2 888
39	1.542	2 773
40	1.499	2 663
41	1.457	2 559
42	1.417	2 459
43	1.377	2 363

TEMPERATURE (C)	PIC III VOLTAGE DROP (V)	RESISTANCE (Ohms)
44	1.338	2 272
45	1.300	2 184
46	1.263	2 101
47	1.227	2 021
48	1.192	1 944
49	1.158	1 871
50	1.124	1 801
51	1.091	1 734
52	1.060	1 670
53	1.029	1 609
54	0.999	1 550
55	0.969	1 493
56	0.941	1 439
57	0.913	1 387
58	0.887	1 337
59	0.861	1 290
60	0.835	1 244
61	0.811	1 200
62	0.787	1 158
63	0.764	1 117
64	0.741	1 079
65	0.719	1 041
66	0.698	1 006
67	0.677	971
68	0.657	938
69	0.638	906
70	0.619	876
71	0.601	846
72	0.583	818
73	0.566	791
74	0.549	765
75	0.533	740
76	0.518	715
77	0.503	692
78	0.488	670
79	0.474	648
80	0.460	628
81	0.447	608
82	0.434	588
83	0.422	570
84	0.410	552
85	0.398	535
86	0.387	518
87	0.376	502
88	0.365	487
89	0.355	472
90	0.344	458
91	0.335	444
92	0.325	431
93	0.316	418
94	0.308	405
95	0.299	393
96	0.291	382
97	0.283	371
98	0.275	360
99	0.267	349
100	0.260	339
101	0.253	330
102	0.246	320
103	0.239	311
104	0.233	302
105	0.227	294
106	0.221	286
107	0.215	278
108	0.210	270
109	0.205	262
110	0.198	255
111	0.193	248
112	0.188	242
113	0.183	235
114	0.178	229
115	0.174	223
116	0.170	217
117	0.165	211
118	0.161	205
119	0.157	200
120	0.153	195

CHECK SENSOR ACCURACY — Place the sensor in a medium of known temperature and compare that temperature to the measured reading. The thermometer used to determine the temperature of the medium should be of laboratory quality with 0.5° F (0.25° C) graduations. The sensor in question should be accurate to within 2° F (1.2° C).

See Fig. 2 and 3 for sensor locations. The sensors are immersed directly in the refrigerant or water circuits. When installing a new sensor, apply a pipe sealant or thread sealant to the sensor threads.

An additional thermistor, factory installed in the bottom of the cooler barrel, will read as *EVAPORATOR REFRIGERANT TEMP* on the HEAT_EX display screen. This thermistor provides additional protection against a loss of water flow.

DUAL TEMPERATURE SENSORS — For servicing convenience, there are 2 sensors each on the bearing and motor temperature sensors. If one of the sensors is damaged, the other can be used by simply moving a wire. The number 2 terminal in the sensor terminal box is the common line. To use the second sensor, move the wire from the number 1 position to the number 3 position.

Checking Pressure Transducers — There are 4 factory-installed pressure transducers measuring refrigerant and oil pressure. There is a fifth pressure transducer measuring pressure variations at the compressor discharge on compressors equipped with a split ring diffuser (SRD). This transducer is not displayed and does not require calibration.

Except for the discharge transducer, these transducers can be calibrated if necessary. It is not usually necessary to calibrate at initial start-up. However, at high altitude locations, it is necessary to calibrate the transducers to ensure the proper refrigerant temperature/pressure relationship. Each transducer is supplied with 5 vdc power from the CCM. If the power supply fails, a transducer voltage reference alarm occurs. If the transducer reading is suspected of being faulty, check the TRANSDUCER VOLTAGE REF supply voltage. It should be 5 vdc ± 0.5 v displayed in CONTROL TEST under CCM Pressure Transducers. If the TRANSDUCER VOLTAGE REF supply voltage is correct, the transducer should be recalibrated or replaced.

Also check that inputs on the CCM J5-1 through J5-6 have not been grounded and are not receiving anything other than a 4 to 20 mA signal.

TRANSDUCER REPLACEMENT — Since the transducers are mounted on Schrader-type fittings, there is no need to remove refrigerant from the vessel when replacing the transducers. Disconnect the transducer wiring. *Do not pull on the transducer wires*. Unscrew the transducer from the Schrader fitting. When installing a new transducer, do not use pipe sealer (which can plug the sensor). Put the plug connector back on the sensor and snap into place. Check for refrigerant leaks.

⚠ WARNING

Be sure to use a back-up wrench on the Schrader fitting whenever removing a transducer, since the Schrader fitting may back out with the transducer, causing a large leak and possible injury to personnel.

COOLER AND CONDENSER PRESSURE TRANSDUCER AND OPTIONAL WATERSIDE FLOW DEVICE CALIBRATION — Calibration can be checked by comparing the pressure readings from the transducer to an accurate refrigeration gage reading. These readings can be viewed or calibrated from the HEAT_EX screen on the ICVC. The transducer can be checked and calibrated at 2 pressure points. These calibration points are 0 psig (0 kPa) and between 25 and 250 psig (173 and 1724 kPa). To calibrate these transducers:

1. Shut down the compressor, cooler, and condenser pumps.

   NOTE: There should be no flow through the heat exchangers.
2. Disconnect the transducer in question from its Schrader fitting for cooler or condenser transducer calibration. For oil pressure or flow device calibration, leave the transducer in place.

   NOTE: If the cooler or condenser vessels are at 0 psig (0 kPa) or are open to atmospheric pressure, the transducers can be calibrated for zero without removing the transducer from the vessel.
3. Access the HEAT_EX screen and view the particular transducer reading (the *EVAPORATOR PRESSURE* or *CONDENSER PRESSURE* parameter on the HEAT_EX screen). To calibrate oil pressure or liquidside flow device, view the particular reading (*CHILLED WATER DELTA P* and *CONDENSER WATER DELTA P* on the HEAT_EX screen, and *OIL PUMP DELTA P* on the COMPRESS screen). It should read 0 psi (0 kPa). If the reading is not 0 psi (0 kPa), but within ± 5 psi (35 kPa), the value may be set to zero by pressing the SELECT softkey while the appropriate transducer parameter is highlighted on the ICVC screen. Then press the ENTER softkey. The value will now go to zero. No high end calibration is necessary for *OIL PRESSURE DELTA P* or flow devices.

   If the transducer value is not within the calibration range, the transducer returns to the original reading. If the pressure is within the allowed range (noted above), check the voltage ratio of the transducer. To obtain the voltage ratio, divide the voltage (dc) input from the transducer by the TRANSDUCER VOLTAGE REF supply voltage signal (displayed in *CONTROL TEST* menu in the PRESSURE TRANSDUCERS screen) or measure across the positive (+ red) and negative (– black) leads of the transducer. For example, the condenser transducer voltage reference is measured at CCM terminals J2-4 and J2-6, the condenser transducer voltage input. The input to reference voltage ratio must be between 0.80 and 0.11 for the software to allow calibration. Pressurize the transducer until the ratio is within range. Then attempt calibration again.
4. A high pressure point can also be calibrated between 25 and 250 psig (172.4 and 1723.7 kPa) by attaching a regulated 250 psig (1724 kPa) pressure (usually from a nitrogen cylinder). The high pressure point can be calibrated by accessing the appropriate transducer parameter on the HEAT_EX screen, highlighting the parameter, pressing the SELECT softkey, and then using the INCREASE or DECREASE softkeys to adjust the value to the exact pressure on the refrigerant gage. Press the ENTER softkey to finish the calibration. Pressures at high altitude locations must be compensated for, so the chiller temperature/pressure relationship is correct.

The PIC II does not allow calibration if the transducer is too far out of calibration. In this case, a new transducer must be installed and re-calibrated. If calibration problems are encountered on the OIL PRESSURE DELTA P channel, sometimes swapping the compressor oil discharge pressure transducer and the oil sump pressure transducer will offset an adverse transducer tolerance stack up and allow the calibration to proceed.

Control Algorithms Checkout Procedure — One of the tables on the ICVC SERVICE menu is CONTROL ALGORITHM STATUS. The maintenance screens may be viewed from the CONTROL ALGORITHM STATUS table to see how a particular control algorithm is operating.

These maintenance screens are very useful in helping to determine how the control temperature is calculated and guide vane positioned and for observing the reactions from load changes, control point overrides, hot gas bypass, surge prevention, etc. The tables are:

CAPACITY	Capacity Control	This table shows all values used to calculate the chilled water/brine control point.
OVERRIDE	Override Status	Details of all chilled water control override values.
SURG_PREV	Surge/ HGBP Status	The surge and hot gas bypass control algorithm status is viewed from this screen. All values dealing with this control are displayed.
HEAT_EX	Heat Exchanger Points Status	All sensor inputs and calculated values related to the heat Exchangers. Also some of the surge control points are shown.
LL_MAINT	LEAD/LAG Status	Indicates LEAD/LAG operation status.
OCCDEFCM	Time Schedules Status	The Local and CCN occupied schedules are displayed here to help the operator quickly determine whether the schedule is in the "occupied" mode or not.
WSMDEFME	Water System Manager Status	The water system manager is a CCN module that can turn on the chiller and change the chilled water control point. This screen indicates the status of this system.
ISM_HIST	ISM Alarm History	Displays ISM values at last fault.
LOADSHED	Loadshed Status	Displays Loadshed (Demand Limit) status.
CUR_ALARM	Current Alarm Status	Displays current chiller alarms.
SURGPREV	Surge Prevention Status	Displays all information used or supplied by the surge prevention algorithm.

Control Test — The Control Test feature can check all the thermistor temperature sensors, pressure transducers, pumps and their associated flow devices, the guide vane actuator, and other control outputs such as tower fans, shunt trip relay, oil heater, alarm relay, and hot gas bypass. The tests can help to determine whether a switch is defective or a pump relay is not operating, as well as other useful troubleshooting issues. During pumpdown operations, the pumps are energized to prevent freeze-up and the vessel pressures and temperatures are displayed. The Pumpdown/Lockout feature prevents compressor start-up when there is no refrigerant in the chiller or if the vessels are isolated. The Terminate Lockout feature ends the Pumpdown/Lockout after the pumpdown procedure is reversed and refrigerant is added.

Control Modules

⚠ CAUTION

Turn controller power off before servicing controls. This ensures safety and prevents damage to the controller.

The ICVC and CCM modules perform continuous diagnostic evaluations of the hardware to determine its condition. Proper operation of all modules is indicated by LEDs (light-emitting diodes) located on the circuit board of the ICVC and CCM.

There is one green and one red LED located on the CCM and ICVC boards.

RED LED (Labeled as STAT) — If the red LED:

- blinks continuously at a 2-second interval, the module is operating properly
- is lit continuously, there is a problem that requires replacing the module
- is off continuously, the power should be checked
- blinks 3 times per second, a software error has been discovered and the module must be replaced

If there is no input power, check the fuses and circuit breaker. If the fuse is good, check for a shorted secondary of the transformer or, if power is present to the module, replace the module.

GREEN LED (Labeled as COM) — These LEDs indicate the communication status between different parts of the controller and the network modules and should blink continuously.

Notes on Module Operation

1. The chiller operator monitors and modifies configurations in the microprocessor by using the 4 softkeys and the ICVC. Communications between the ICVC and the CCM is accomplished through the SIO (Sensor Input/ Output) bus, which is a phone cable.
2. If a green LED is on continuously, check the communication wiring. If a green LED is off, check the red LED operation. If the red LED is normal, check the module address switches (SW1) (Fig. 54 and 55). Confirm all switches are in OFF position.

   All system operating intelligence resides in the ICVC. Outputs are controlled by the CCM as well.
3. Power is supplied to the modules within the control panel via 24-vac power sources.

   The transformers are located within the power panels.

   In the power panel, T1 supplies power to the compressor oil heater, oil pump, and optional hot gas bypass, and T2 supplies power to both the ICVC and CCM.

   T3 provides 24-v power to the optional modules.

   Power is connected to Plug J1 on each module.

Chiller Control Module (CCM) (Fig. 55)

INPUTS — Each input channel has 2 or 3 terminals. Refer to individual chiller wiring diagrams for the correct terminal numbers for your application.

OUTPUTS — Output is 24 vac. There are 2 terminals per output. Refer to the chiller wiring diagram for your specific application for the correct terminal numbers.

Integrated Starter Module (Fig. 56)

INPUTS — Inputs on strips J3 through J6 are analog inputs and J2 is discrete (on/off) input. The specific application of the chiller determines which terminals are used. Refer to the individual chiller wiring diagram for the correct terminal numbers for your application.

OUTPUTS — Outputs are rated for 115-277 vac and wired to strip J9. There are 2 terminals per output.

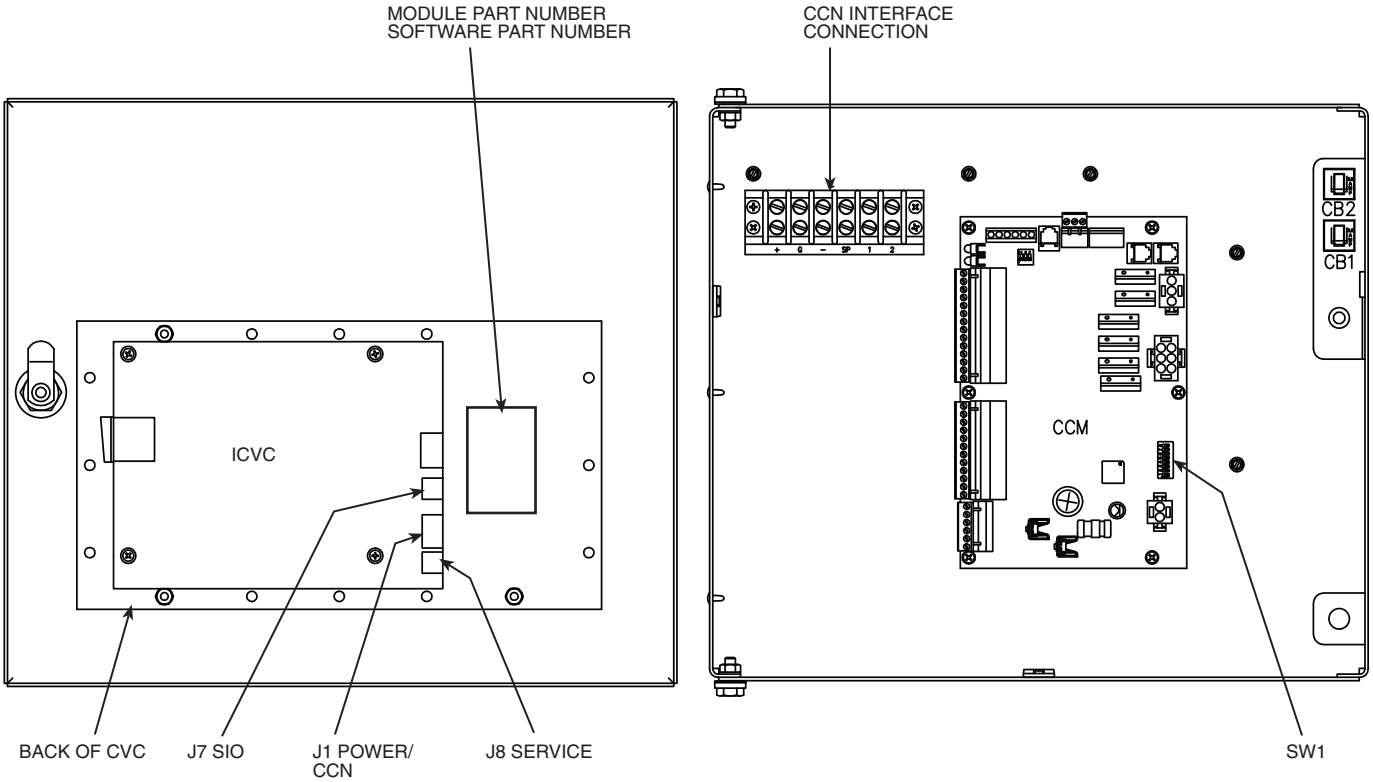

Fig. 54 — Rear of ICVC (International Chiller Visual Controller)

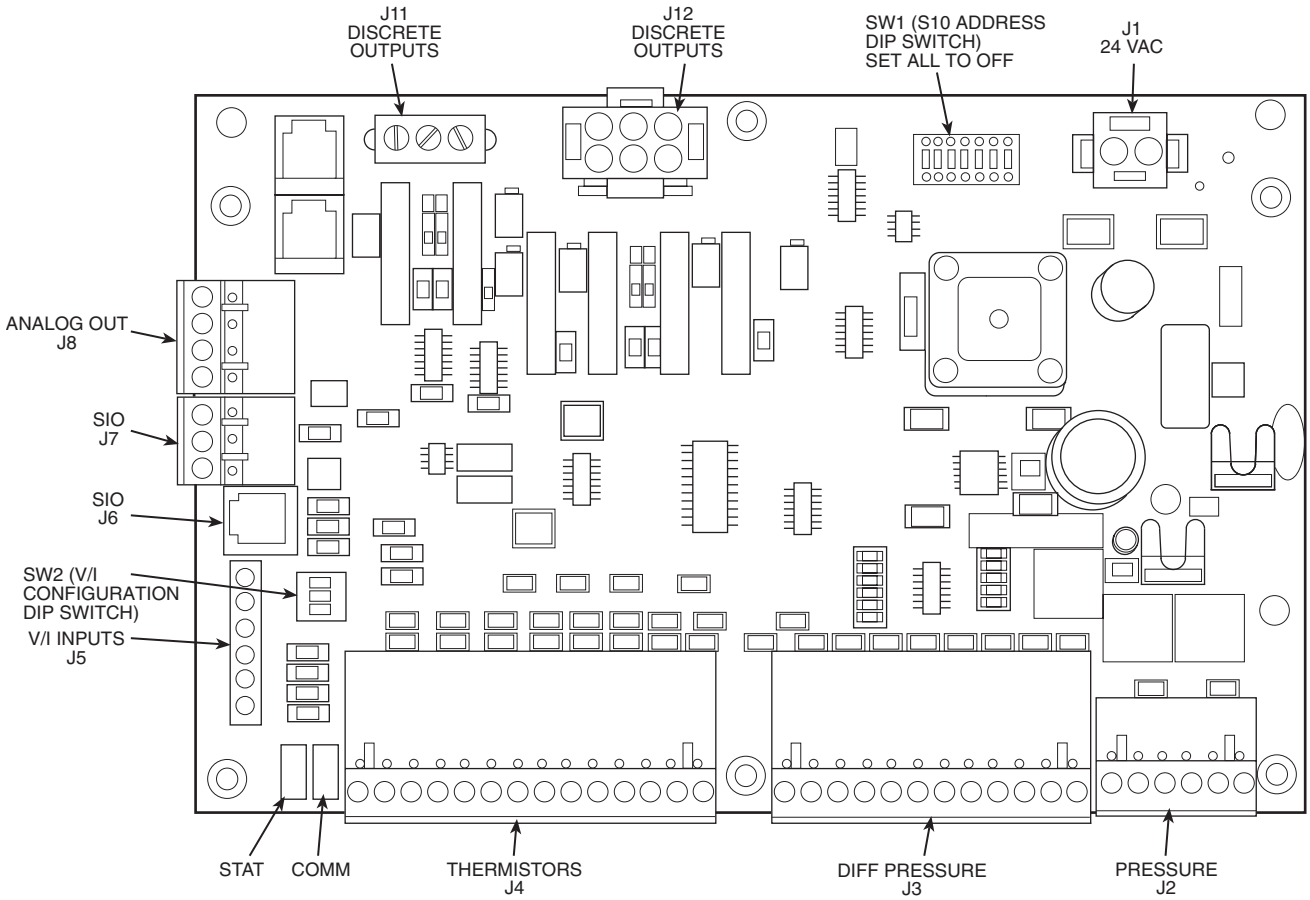

Fig. 55 — Chiller Control Module (CCM)

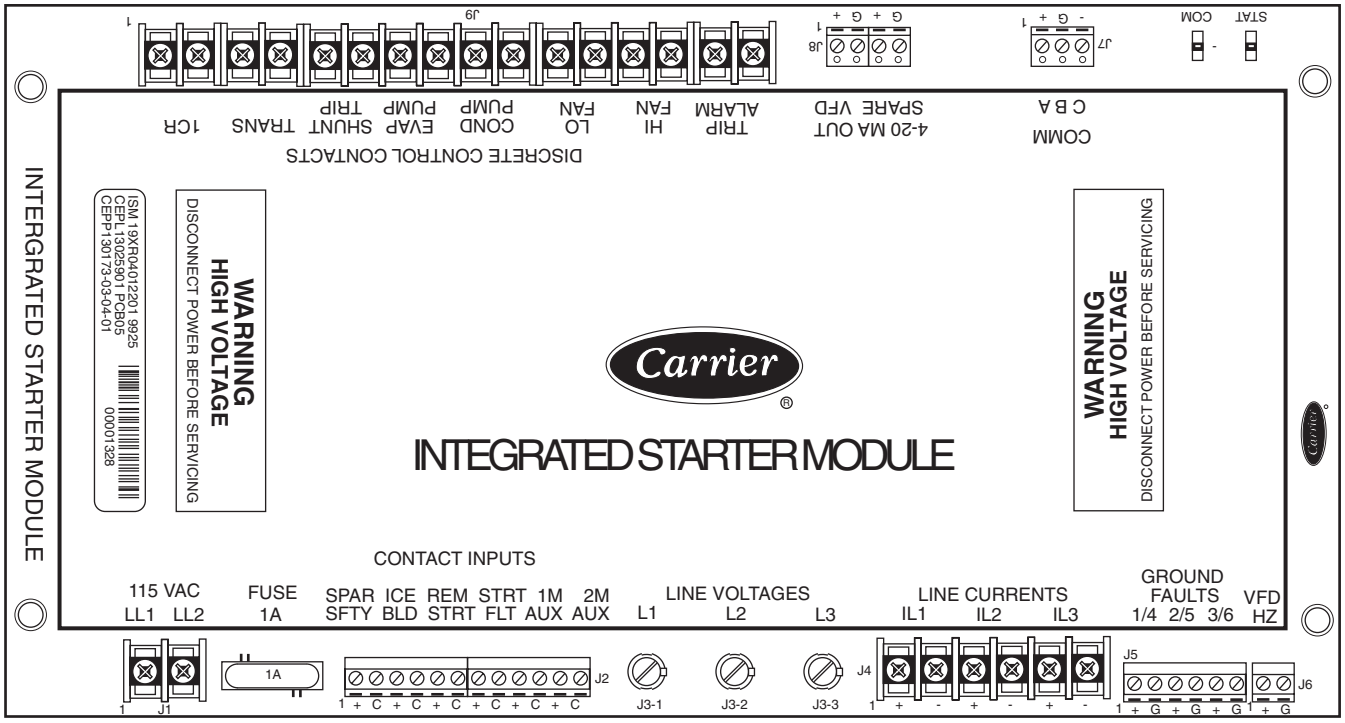

Fig. 56 — Integrated Starter Module (ISM)

Replacing Defective Processor Modules — The module replacement part number is printed on a small label on the rear of the ICVC module. The chiller model and serial numbers are printed on the chiller nameplate located on an exterior corner post. The proper software is factory-installed by Carrier in the replacement module. When ordering a replacement chiller visual control (ICVC) module, specify the complete replacement part number, full chiller model number, and chiller serial number. The installer must configure the new module to the original chiller data. Follow the procedures described in the Software Configuration section on page 73.

⚠ CAUTION

Electrical shock can cause personal injury. Disconnect all electrical power before servicing.

INSTALLATION

1. Verify the existing ICVC module is defective by using the procedure described in the Troubleshooting Guide section, page 97, and the Control Modules section, page 115. Do not select the ATTACH TO NETWORK DEVICE table if the ICVC indicates a communication failure.
2. Data regarding the ICVC configuration should have been recorded and saved. This data must be reconfigured into the new ICVC. If this data is not available, follow the procedures described in the Software Configuration section. If the module to be replaced is functional, configurations may also be copied manually. The data sheets on pages CL-3 through CL-12 are provided for this purpose. Default values are shown so that only deviations from these need to be recorded.

   If a CCN Building Supervisor or Service Tool is available, the module configuration should have already been uploaded into memory. When the new module is installed, the configuration can be downloaded from the computer.

   Any communication wires from other chillers or CCN modules should be disconnected to prevent the new ICVC module from uploading incorrect run hours into memory.
3. To install this module, record values for the *TOTAL COMPRESSOR STARTS* and the *COMPRESSOR ONTIME* from the MAINSTAT screen on the ICVC.
4. Power off the controls.
5. Remove the old ICVC.
6. Install the new ICVC module. Turn the control power back on.
7. The ICVC now automatically attaches to the local network device.
8. Set the current time and date in the SERVICE/TIME AND DATE screen. Set the CCN Bus and Address in the SERVICE / ICVC CONFIGURATION screen. Press the alarm RESET softkey (from the default screen). Upload via Service Tool or manually reenter all non-default configuration values. (Refer to pages CL-3 through CL-12.) If the correct VFD Configuration values are displayed in the ISM_CONF table when that table is viewed, simply press EXIT then SAVE to reload all of them. Use Service Tool or manually reenter *TOTAL COMPRESSOR STARTS*, *SERVICE ONTIME* and *COMPRESSOR ONTIME*. If forced using Service Tool, release the force on *SERVICE ONTIME* after the desired value has been set.
9. Perform the guide vane calibration procedure (in Control Test). Check and recalibrate pressure transducer readings (refer to pages 96 and 97). Check that the *CURRENT TIME* and *DATE* in the *TIME AND DATE* screen are correct.

Solid-State Starters — Troubleshooting information pertaining to the Benshaw, Inc., solid-state starter may be found in the following paragraphs and in the Carrier RediStart MX3 Instruction Manual supplied by the starter vendor.

Attempt to solve the problem by using the following preliminary checks before consulting the troubleshooting tables found in the Benshaw manual.

⚠ WARNING

1. Motor terminals or starter output lugs or wire should not be touched without disconnecting the incoming power supply. The silicon control rectifiers (SCRs) although technically turned off still have AC mains potential on the output of the starter.
2. Power is present on all yellow wiring throughout the system even though the main circuit breaker in the unit is off.

With power off:
- Inspect for physical damage and signs of arcing, overheating, etc.
- Verify the wiring to the starter is correct.
- Verify all connections in the starter are tight.
- Check the control transformer fuses.

TESTING SILICON CONTROL RECTIFIERS IN THE BENSHAW, INC., SOLID-STATE STARTERS — If an SCR is suspected of being defective, use the following procedure as part of a general troubleshooting guide.

1. Verify power is applied.
2. Verify the state of each SCR light-emitting diode (LED) on the micropower card.

   NOTE: All LEDs should be lit. If any red or green side of these LEDs is not lit, the line voltage is not present or one or more SCRs has failed.
3. Check incoming power. If voltage is not present check the incoming line. If voltage is present, proceed to Steps 4 through 11.

   NOTE: If after completing Steps 4 - 11 all measurements are within specified limits, the SCRs are functioning normally. If after completing Steps 4 - 11 resistance measurements are outside the specified limits, the motor leads on the starter power lugs T1 through T6 should be removed and the steps repeated. This will identify if abnormal resistance measurements are being influenced by the motor windings.
4. Remove power from the starter unit.
5. Using an ohmmeter, perform the following resistance measurements and record the results:

MEASURE BETWEEN	SCR PAIRS BEING CHECKED	RECORDED VALUE
T1 and T6	3 and 6	
T2 and T4	2 and 5	
T3 and T5	1 and 4	

   If all measured values are greater than 5000 ohms, proceed to Step 10. If any values are less than 5000 ohms, one or more of the SCRs in that pair is shorted.
6. Remove both SCRs in the pair (See SCR Removal/Installation).
7. Using an ohmmeter, measure the resistance (anode to cathode) of each SCR to determine which device has failed.

   NOTE: Both SCRs may be defective, but typically, only one is shorted. If both SCRs provide acceptable resistance measurements, proceed to Step 10.
8. Replace the defective SCR(s).
9. Retest the "pair" for resistance values indicated above.
10. On the right side of the firing card, measure the resistance between the red and white gate/cathode leads for each SCR (1 through 6). A measurement between 5 and 50 ohms is normal. Abnormally high values may indicate a failed gate for that SCR.

⚠ CAUTION

If any red or white SCR gate leads are removed from the firing card or an SCR, care must be taken to ensure the leads are replaced EXACTLY as they were (white wires to gates, and red wires to cathodes on both the firing card and SCR), or damage to the starter and/or motor may result.

11. Replace the SCRs and retest the pair.

SCR REMOVAL/INSTALLATION

1. Remove the SCR by loosening the clamping bolts on each side of the SCR.
2. After the SCR has been removed and the bus work is loose, apply a thin coat of either silicon based thermal joint compound or a joint compound for aluminum or copper wire connections to the contact surfaces of the replacement SCR. This allows for improved heat dissipation and electrical conductivity.
3. Place the SCR between the roll pins on the heat sink assemblies so the roll pins fit into the small holes in each side of the SCR.

   NOTE: Ensure the SCR is installed so the cathode side is the side from which the red wire extends. The heatsink is labeled to show the correct orientation.
4. Finger tighten the clamp. Ensure both bolts are tightened an equal amount so that the loader bar is square in the heatsink. See Fig. 57.
5. Tighten the bolts equally in $^1/_8$ turn increments until the indicator washer(s), which are under the nut(s) in the center of the loader bar becomes loose indicating that the clamp is tight. See Fig. 57. On the loader bars with two indicator washers, it may be necessary to tighten or loosen one side of the clamp to get both indicator washers free. Reconnect the red (cathode) wire from the SCR and the white (anode-gate) wire to the appropriate location on the firing card (i.e., SCR1 wires to firing card terminal G1-white wire, and K1-red wire).
6. Reconnect all other wiring and bus work.
7. Return starter to normal operation.

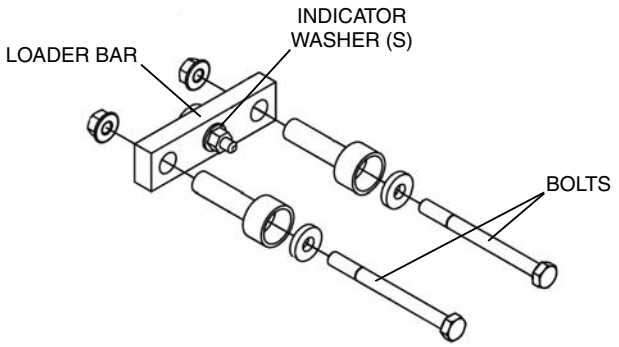

Fig. 57 — SCR Installation

Physical Data — Tables 18A-25 and Fig. 58-70 provide additional information on component weights, compressor fits and clearances, physical and electrical data, and wiring schematics for the operator's convenience during troubleshooting.

Table 18A — 19XR,XRV Heat Exchanger Weights — Drive End Entering Cooler Water

Code†	English						Metric (SI)					
	Dry Rigging Weight (lb)*		Machine Charge				Dry Rigging Weight (kg)*		Machine Charge			
	Cooler Only	Condenser Only	Refrigerant Weight (lb)		Water Weight (lb)		Cooler Only	Condenser Only	Refrigerant Weight (kg)		Water Weight (kg)	
			Cooler	Condenser	Cooler	Condenser			Cooler	Condenser	Cooler	Condenser
10	2707	2704	328	226	283	348	1229	1228	149	103	128	158
11	2777	2772	357	226	309	374	1261	1258	162	103	140	170
12	2848	2857	387	226	335	407	1293	1297	176	103	152	185
15	2968	2984	405	275	327	402	1346	1355	184	125	148	183
16	3054	3068	441	275	359	435	1387	1393	200	125	163	197
17	3141	3173	477	275	391	475	1426	1441	217	125	178	216
20	3407	3373	416	252	402	398	1547	1531	189	114	183	181
21	3555	3540	459	252	456	462	1614	1607	208	114	207	210
22	3711	3704	505	252	514	526	1685	1682	229	114	233	239
30	4071	3694	510	308	464	464	1848	1677	232	140	211	211
31	4253	3899	565	308	531	543	1931	1770	257	140	241	247
32	4445	4100	626	308	601	621	2018	1861	284	140	273	282
35	4343	4606	577	349	511	513	1972	2091	262	158	232	233
36	4551	4840	639	349	587	603	2066	2197	290	158	266	274
37	4769	5069	709	349	667	692	2165	2301	322	158	303	314
40	4908	5039	726	338	863	915	2228	2288	330	153	392	415
41	5078	5232	783	338	930	995	2305	2375	355	153	422	452
42	5226	5424	840	338	990	1074	2373	2462	381	153	449	488
45	5363	5602	821	383	938	998	2435	2543	373	174	426	453
46	5559	5824	874	383	1014	1088	2524	2644	397	174	460	494
47	5730	6044	949	383	1083	1179	2601	2744	431	174	492	535
50	5713	6090	897	446	1101	1225	2594	2765	407	202	500	556
51	5940	6283	974	446	1192	1304	2697	2852	442	202	541	592
52	6083	6464	1021	446	1248	1379	2762	2935	464	202	567	626
53	6141	6529	1010	446	1277	1409	2788	2964	459	202	580	640
54	6192	6591	987	446	1302	1439	2811	2992	448	202	591	653
55	6257	6785	1014	504	1201	1339	2841	3080	460	229	545	608
56	6517	7007	1101	504	1304	1429	2959	3181	500	229	592	649
57	6682	7215	1154	504	1369	1514	3034	3276	524	229	622	687
58	6751	7291	1143	504	1401	1550	3065	3310	519	229	636	704
59	6811	7363	1116	504	1430	1583	3092	3343	507	229	649	719
5A	5124	—	491	—	1023	—	2326	—	223	—	464	—
5B	5177	—	510	—	1050	—	2350	—	232	—	477	—
5C	5243	—	532	—	1079	—	2380	—	242	—	490	—
5F	5577	—	553	—	1113	—	2532	—	251	—	505	—
5G	5640	—	575	—	1143	—	2561	—	261	—	519	—
5H	5716	—	600	—	1176	—	2595	—	272	—	534	—
5K	4993	—	673	—	1067	—	2267	—	306	—	484	—
5L	5090	—	706	—	1118	—	2311	—	321	—	508	—
5M	5165	—	742	—	1162	—	2345	—	337	—	528	—
5P	5041	—	641	—	1111	—	2289	—	291	—	504	—
5Q	5131	—	678	—	1155	—	2329	—	308	—	524	—
5R	5214	—	709	—	1206	—	2367	—	322	—	548	—
5T	5425	—	768	—	1162	—	2463	—	349	—	528	—
5U	5534	—	801	—	1220	—	2512	—	364	—	554	—
5V	5620	—	843	—	1270	—	2551	—	383	—	577	—
5X	5484	—	730	—	1212	—	2490	—	331	—	550	—
5Y	5584	—	769	—	1262	—	2535	—	349	—	573	—
5Z	5678	—	805	—	1320	—	2578	—	365	—	599	—
60	6719	6764	1091	479	1400	1521	3050	3071	495	217	636	691
61	6895	6949	1150	479	1470	1597	3130	3155	522	217	667	725
62	7038	7130	1202	479	1527	1671	3195	3237	546	217	693	759
63	7103	7199	1202	479	1559	1704	3225	3268	546	217	708	774
64	7161	7264	1178	479	1587	1735	3251	3298	535	217	720	788
65	7392	6782	1241	542	1530	1667	3356	3079	563	246	695	757
66	7594	7894	1309	542	1610	1753	3448	3584	594	246	731	796
67	7759	8102	1369	542	1674	1838	3523	3678	622	246	760	834
68	7836	8182	1359	542	1711	1875	3558	3715	617	246	777	851
69	7905	8258	1332	542	1743	1911	3589	3749	605	246	791	868

*Rigging weights are for standard tubes of standard wall thickness (0.025-in. [0.635 mm] wall).
†Heat exchanger frame sizes 1 through 6 available on single-stage chillers only.
NOTES:
1. Cooler includes the control panel (ICVC), suction elbow, and $^1/_2$ the distribution piping weight.
2. Condenser includes float valve and sump, discharge elbow, and $^1/_2$ the distribution piping weight.
3. For special tubes refer to the 19XR/XRV Computer Selection Program.
4. All weights for standard 2-pass NIH (nozzle-in-head) design.
5. For "E" compressor, add 1054 lb (478 kg) steel weight and 283 lb (128 kg) refrigerant weight for economizer assembly.

Table 18A — 19XR,XRV Heat Exchanger Weights — Drive End Entering Cooler Water (cont)

Code†	English						Metric (SI)					
	Dry Rigging Weight (lb)*		Machine Charge				Dry Rigging Weight (kg)*		Machine Charge			
	Cooler Only	Condenser Only	Refrigerant Weight (lb)		Water Weight (lb)		Cooler Only	Condenser Only	Refrigerant Weight (kg)		Water Weight (kg)	
			Cooler	Condenser	Cooler	Condenser			Cooler	Condenser	Cooler	Condenser
6K	5716	—	760	—	1291	—	2595	—	345	—	586	—
6L	5804	—	797	—	1341	—	2635	—	362	—	609	—
6M	5894	—	828	—	1399	—	2676	—	376	—	635	—
6P	5768	—	725	—	1338	—	2619	—	329	—	607	—
6Q	5852	—	764	—	1385	—	2657	—	347	—	629	—
6R	5938	—	798	—	1439	—	2696	—	362	—	653	—
6T	6230	—	863	—	1405	—	2828	—	392	—	638	—
6U	6330	—	905	—	1462	—	2874	—	411	—	664	—
6V	6433	—	941	—	1528	—	2921	—	427	—	694	—
6X	6293	—	823	—	1459	—	2857	—	374	—	662	—
6Y	6388	—	868	—	1512	—	2900	—	394	—	686	—
6Z	6487	—	906	—	1574	—	2945	—	411	—	715	—
70	9942	10786	1409	840	2008	2225	4514	4897	640	381	912	1010
71	10330	11211	1539	840	2164	2389	4690	5090	699	381	982	1085
72	10632	11622	1646	840	2286	2548	4827	5276	747	381	1038	1157
73	10715	11737	1622	840	2328	2604	4865	5329	736	381	1057	1182
74	10790	11775	1584	840	2366	2622	4899	5346	719	381	1074	1190
75	10840	11859	1599	950	2183	2431	4921	5384	726	431	991	1104
76	11289	12345	1747	950	2361	2619	5125	5605	793	431	1072	1189
77	11638	12814	1869	950	2501	2801	5284	5818	849	431	1135	1272
78	11738	12949	1849	950	2548	2864	5329	5879	839	431	1157	1300
79	11828	12994	1806	950	2592	2885	5370	5899	820	431	1177	1310
7K	8728	—	1047	—	1948	—	3963	—	475	—	884	—
7L	8959	—	1132	—	2094	—	4067	—	514	—	951	—
7M	9161	—	1214	—	2229	—	4159	—	551	—	1012	—
7P	8792	—	1002	—	2010	—	3992	—	455	—	913	—
7Q	9023	—	1087	—	2156	—	4096	—	493	—	979	—
7R	9229	—	1167	—	2295	—	4190	—	530	—	1042	—
7T	9431	—	1194	—	2115	—	4282	—	542	—	960	—
7U	9698	—	1292	—	2282	—	4403	—	587	—	1036	—
7V	9932	—	1403	—	2436	—	4509	—	637	—	1106	—
7X	9510	—	1142	—	2185	—	4318	—	518	—	992	—
7Y	9777	—	1240	—	2352	—	4439	—	563	—	1068	—
7Z	10016	—	1347	—	2511	—	4547	—	612	—	1140	—
80	12664	12753	1700	836	2726	2977	5749	5790	772	380	1238	1352
81	12998	13149	1812	836	2863	3143	5901	5970	823	380	1300	1427
82	13347	13545	1928	836	3005	3309	6060	6149	875	380	1364	1502
83	13437	13872	1877	836	3053	3476	6100	6298	852	380	1386	1578
84	13523	14217	1840	836	3099	3651	6139	6455	835	380	1407	1658
85	13804	14008	1927	945	2951	3238	6267	6360	875	429	1340	1470
86	14191	14465	2054	945	3108	3428	6443	6567	933	429	1411	1556
87	14597	14923	2186	945	3271	3618	6627	6775	992	429	1485	1643
88	14705	15311	2142	945	3325	3608	6676	6951	972	429	1510	1638
89	14808	15721	2099	945	3378	4009	6723	7137	953	429	1534	1820
8K	11153	—	1385	—	2760	—	5063	—	629	—	1253	—
8L	11400	—	1484	—	2926	—	5176	—	674	—	1328	—
8M	11650	—	1589	—	3088	—	5289	—	721	—	1402	—
8P	11219	—	1334	—	2830	—	5093	—	606	—	1285	—
8Q	11470	—	1430	—	2999	—	5207	—	649	—	1362	—
8R	11719	—	1535	—	3161	—	5320	—	697	—	1435	—
8T	12069	—	1580	—	2991	—	5479	—	717	—	1358	—
8U	12357	—	1694	—	3180	—	5610	—	769	—	1444	—
8V	12645	—	1814	—	3365	—	5741	—	824	—	1528	—
8X	12152	—	1522	—	3070	—	5517	—	691	—	1394	—
8Y	12444	—	1632	—	3264	—	5650	—	741	—	1482	—
8Z	12733	—	1752	—	3448	—	5781	—	795	—	1565	—

*Rigging weights are for standard tubes of standard wall thickness (0.025-in. [0.635 mm] wall).
†Heat exchanger frame sizes 1 through 6 available on single-stage chillers only.
NOTES:
1. Cooler includes the control panel (ICVC), suction elbow, and $^1/_2$ the distribution piping weight.
2. Condenser includes float valve and sump, discharge elbow, and $^1/_2$ the distribution piping weight.
3. For special tubes refer to the 19XR/XRV Computer Selection Program.
4. All weights for standard 2-pass NIH (nozzle-in-head) design.
5. For "E" compressor, add 1054 lb (478 kg) steel weight and 283 lb (128 kg) refrigerant weight for economizer assembly.

Table 18B — 19XR,XRV Heat Exchanger Weights — Compressor End Entering Cooler Water

Code†	English						Metric (SI)					
	Dry Rigging Weight (lb)*		Machine Charge				Dry Rigging Weight (kg)*		Machine Charge			
	Cooler Only	Condenser Only	Refrigerant Weight (lb)		Water Weight (lb)		Cooler Only	Condenser Only	Refrigerant Weight (kg)		Water Weight (kg)	
			Cooler	Condenser	Cooler	Condenser			Cooler	Condenser	Cooler	Condenser
10	2707	2704	290	200	283	348	1228	1227	132	91	128	158
11	2777	2772	310	200	309	374	1260	1257	141	91	140	170
12	2848	2857	330	200	335	407	1292	1296	150	91	152	185
15	2968	2984	320	250	327	402	1346	1354	145	113	148	182
16	3054	3068	340	250	359	435	1385	1392	154	113	163	197
17	3141	3173	370	250	391	475	1425	1439	168	113	177	215
20	3407	3373	345	225	402	398	1545	1530	156	102	182	181
21	3555	3540	385	225	456	462	1613	1606	175	102	207	210
22	3711	3704	435	225	514	526	1683	1680	197	102	233	239
30	4071	3694	350	260	464	464	1847	1676	159	118	210	210
31	4253	3899	420	260	531	543	1929	1769	191	118	241	246
32	4445	4100	490	260	601	621	2016	1860	222	118	273	282
35	4343	4606	400	310	511	513	1970	2089	181	141	232	233
36	4551	4840	480	310	587	603	2064	2195	218	141	266	274
37	4769	5069	550	310	667	692	2163	2299	249	141	303	314
40	4908	5039	560	338	863	915	2226	2286	254	153	391	415
41	5078	5232	630	338	930	995	2303	2373	286	153	422	451
42	5226	5424	690	338	990	1074	2370	2460	313	153	449	487
45	5363	5602	640	383	938	998	2433	2541	290	174	425	453
46	5559	5824	720	383	1014	1088	2522	2642	327	174	460	494
47	5730	6044	790	383	1083	1179	2599	2742	358	174	491	535
50	5713	6090	750	446	1101	1225	2591	2762	340	202	499	556
51	5940	6283	840	446	1192	1304	2694	2850	381	202	541	591
52	6083	6464	900	446	1248	1379	2759	2932	408	202	566	626
53	6141	6529	900	446	1277	1409	2788	2964	408	202	580	640
54	6192	6591	900	446	1302	1439	2811	2992	408	202	591	653
55	6257	6785	870	509	1201	1339	2838	3078	395	231	545	607
56	6517	7007	940	509	1304	1429	2956	3178	426	231	591	648
57	6682	7215	980	509	1369	1514	3031	3273	445	231	621	687
58	6751	7291	980	509	1401	1550	3065	3310	445	231	636	704
59	6811	7363	980	509	1430	1583	3092	3343	445	231	649	719
5A	5124	—	500	—	1023	—	2324	—	227	—	464	—
5B	5177	—	520	—	1050	—	2348	—	236	—	476	—
5C	5243	—	550	—	1079	—	2378	—	249	—	489	—
5F	5577	—	550	—	1113	—	2530	—	249	—	505	—
5G	5640	—	570	—	1143	—	2558	—	259	—	518	—
5H	5716	—	600	—	1176	—	2593	—	272	—	533	—
5K	4993	—	673	—	1067	—	2267	—	306	—	484	—
5L	5090	—	706	—	1118	—	2311	—	321	—	508	—
5M	5165	—	742	—	1162	—	2345	—	337	—	528	—
5P	5041	—	641	—	1111	—	2289	—	291	—	504	—
5Q	5131	—	678	—	1155	—	2329	—	308	—	524	—
5R	5214	—	709	—	1206	—	2367	—	322	—	548	—
5T	5425	—	768	—	1162	—	2463	—	349	—	528	—
5U	5534	—	801	—	1220	—	2512	—	364	—	554	—
5V	5620	—	843	—	1270	—	2551	—	383	—	577	—
5X	5484	—	730	—	1212	—	2490	—	331	—	550	—
5Y	5584	—	769	—	1262	—	2535	—	349	—	573	—
5Z	5678	—	805	—	1320	—	2578	—	365	—	599	—
60	6719	6764	940	479	1400	1521	3048	3068	426	217	635	690
61	6895	6949	980	479	1470	1597	3128	3152	445	217	667	724
62	7038	7130	1020	479	1527	1671	3192	3234	463	217	693	758
63	7103	7199	1020	479	1559	1704	3225	3268	463	217	708	773
64	7161	7264	1020	479	1587	1735	3251	3298	463	217	720	788
65	7392	7682	1020	542	1530	1667	3353	3484	463	246	694	756
66	7594	7894	1060	542	1610	1753	3445	3581	481	246	730	795
67	7759	8102	1090	542	1674	1838	3519	3675	494	246	759	834
68	7836	8182	1090	542	1711	1875	3558	3715	494	246	777	851
69	7905	8258	1090	542	1743	1911	3589	3749	494	246	791	868

*Rigging weights are for standard tubes of standard wall thickness (0.025-in. [0.635 mm] wall).
†Heat exchanger frame sizes 1 through 6 available on single-stage chillers only.
NOTES:
1. Cooler includes the control panel (ICVC), suction elbow, and $^1/_2$ the distribution piping weight.
2. Condenser includes float valve and sump, discharge elbow, and $^1/_2$ the distribution piping weight.
3. For special tubes refer to the 19XR/XRV Computer Selection Program.
4. All weights for standard 2-pass NIH (nozzle-in-head) design.
5. For "E" compressor, add 1054 lb (478 kg) steel weight and 283 lb (128 kg) refrigerant weight for economizer assembly.

Table 18B — 19XR,XRV Heat Exchanger Weights — Compressor End Entering Cooler Water (cont)

Code†	English						Metric (SI)					
	Dry Rigging Weight (lb)*		Machine Charge				Dry Rigging Weight (kg)*		Machine Charge			
	Cooler Only	Condenser Only	Refrigerant Weight (lb)		Water Weight (lb)		Cooler Only	Condenser Only	Refrigerant Weight (kg)		Water Weight (kg)	
			Cooler	Condenser	Cooler	Condenser			Cooler	Condenser	Cooler	Condenser
6K	5716	—	760	—	1291	—	2595	—	345	—	586	—
6L	5804	—	797	—	1341	—	2635	—	362	—	609	—
6M	5894	—	828	—	1399	—	2676	—	376	—	635	—
6P	5768	—	725	—	1338	—	2619	—	329	—	607	—
6Q	5852	—	764	—	1385	—	2657	—	347	—	629	—
6R	5938	—	798	—	1439	—	2696	—	362	—	653	—
6T	6230	—	863	—	1405	—	2828	—	392	—	638	—
6U	6330	—	905	—	1462	—	2874	—	411	—	664	—
6V	6433	—	941	—	1528	—	2921	—	427	—	694	—
6X	6293	—	823	—	1459	—	2857	—	374	—	662	—
6Y	6388	—	868	—	1512	—	2900	—	394	—	686	—
6Z	6487	—	906	—	1574	—	2945	—	411	—	715	—
70	9942	10786	1220	840	2008	2225	4510	4893	553	381	911	1009
71	10330	11211	1340	840	2164	2389	4686	5085	608	381	982	1084
72	10632	11622	1440	840	2286	2548	4823	5278	653	381	1037	1156
73	10715	11737	1440	840	2328	2604	4865	5329	654	381	1057	1182
74	10790	11775	1440	840	2366	2622	4899	5346	654	381	1074	1190
75	10840	11859	1365	950	2183	2431	4917	5379	619	431	990	1103
76	11289	12345	1505	950	2361	2619	5121	5600	683	431	1071	1188
77	11638	12814	1625	950	2501	2801	5279	5812	737	431	1134	1271
78	11738	12949	1625	950	2548	2864	5329	5879	738	431	1157	1300
79	11828	12994	1625	950	2592	2885	5370	5899	738	431	1177	1310
7K	8728	—	1047	—	1948	—	3963	—	475	—	884	—
7L	8959	—	1132	—	2094	—	4067	—	514	—	951	—
7M	9161	—	1214	—	2229	—	4159	—	551	—	1012	—
7P	8792	—	1002	—	2010	—	3992	—	455	—	913	—
7Q	9023	—	1087	—	2156	—	4096	—	493	—	979	—
7R	9229	—	1167	—	2295	—	4190	—	530	—	1042	—
7T	9431	—	1194	—	2115	—	4282	—	542	—	960	—
7U	9698	—	1292	—	2282	—	4403	—	587	—	1036	—
7V	9932	—	1403	—	2436	—	4509	—	637	—	1106	—
7X	9510	—	1142	—	2185	—	4318	—	518	—	992	—
7Y	9777	—	1240	—	2352	—	4439	—	563	—	1068	—
7Z	10016	—	1347	—	2511	—	4547	—	612	—	1140	—
80	12664	12753	1500	836	2726	2977	5744	5785	680	379	1236	1350
81	12998	13149	1620	836	2863	3143	5896	5964	735	379	1299	1426
82	13347	13545	1730	836	3005	3309	6054	6144	785	379	1363	1501
83	13437	13872	1730	836	3053	3476	6100	6298	785	379	1386	1578
84	13523	14217	1730	836	3099	3651	6139	6455	785	379	1407	1658
85	13804	14008	1690	945	2951	3238	6261	6354	767	429	1339	1469
86	14191	14465	1820	945	3108	3428	6437	6561	826	429	1410	1555
87	14597	14923	1940	945	3271	3618	6621	6769	880	429	1484	1641
88	14705	15311	1940	945	3325	3808	6676	6951	881	429	1510	1729
89	14808	15721	1940	945	3378	4009	6723	7137	881	429	1534	1820
8K	11153	—	1385	—	2760	—	5063	—	629	—	1253	—
8L	11400	—	1484	—	2926	—	5176	—	674	—	1328	—
8M	11650	—	1589	—	3088	—	5289	—	721	—	1402	—
8P	11219	—	1334	—	2830	—	5093	—	606	—	1285	—
8Q	11470	—	1430	—	2999	—	5207	—	649	—	1362	—
8R	11719	—	1535	—	3161	—	5320	—	697	—	1435	—
8T	12069	—	1580	—	2991	—	5479	—	717	—	1358	—
8U	12357	—	1694	—	3180	—	5610	—	769	—	1444	—
8V	12645	—	1814	—	3365	—	5741	—	824	—	1528	—
8X	12152	—	1522	—	3070	—	5517	—	691	—	1394	—
8Y	12444	—	1632	—	3264	—	5650	—	741	—	1482	—
8Z	12733	—	1752	—	3448	—	5781	—	795	—	1565	—

*Rigging weights are for standard tubes of standard wall thickness (0.025-in. [0.635 mm] wall).
†Heat exchanger frame sizes 1 through 6 available on single-stage chillers only.
NOTES:
1. Cooler includes the control panel (ICVC), suction elbow, and $^1/_2$ the distribution piping weight.
2. Condenser includes float valve and sump, discharge elbow, and $^1/_2$ the distribution piping weight.
3. For special tubes refer to the 19XR/XRV Computer Selection Program.
4. All weights for standard 2-pass NIH (nozzle-in-head) design.
5. For "E" compressor, add 1054 lb (478 kg) steel weight and 283 lb (128 kg) refrigerant weight for economizer assembly.

Table 19 — 19XR,XRV Additional Data for Marine Waterboxes*

HEAT EXCHANGER FRAME, PASS	ENGLISH					SI				
	psig	Rigging Weight (lb)		Water Volume (gal)		kPa	Rigging Weight (kg)		Water Volume (L)	
		Cooler	Condenser	Cooler	Condenser		Cooler	Condenser	Cooler	Condenser
FRAME 2, 1 AND 3 PASS	150	730	—	84	—	1034	331	—	318	—
FRAME 2, 2 PASS		365	365	42	42		166	166	159	159
FRAME 3, 1 AND 3 PASS		730	—	84	—		331	—	318	—
FRAME 3, 2 PASS		365	365	42	42		166	166	159	159
FRAME 4, 1 AND 3 PASS		1888	—	109	—		856	—	412	—
FRAME 4, 2 PASS		944	989	54	54		428	449	205	205
FRAME 5, 1 AND 3 PASS		2445	—	122	—		1109	—	462	—
FRAME 5, 2 PASS		1223	1195	61	60		555	542	231	226
FRAME 6, 1 AND 3 PASS		2860	—	139	—		1297	—	524	—
FRAME 6, 2 PASS		1430	1443	69	69		649	655	262	262
FRAME 7, 1 AND 3 PASS		3970	—	309	—		1801	—	1170	—
FRAME 7, 2 PASS		1720	1561	155	123		780	708	585	465
FRAME 8, 1 AND 3 PASS		5048	—	364	—		2290	—	1376	—
FRAME 8, 2 PASS		2182	1751	182	141		990	794	688	532
FRAME 2, 1 AND 3 PASS	300	860	—	84	—	2068	390	—	318	—
FRAME 2, 2 PASS		430	430	42	42		195	195	159	159
FRAME 3, 1 AND 3 PASS		860	—	84	—		390	—	318	—
FRAME 3, 2 PASS		430	430	42	42		195	195	159	159
FRAME 4, 1 AND 3 PASS		2162	—	109	—		981	—	412	—
FRAME 4, 2 PASS		1552	1641	47	47		704	744	178	178
FRAME 5, 1 AND 3 PASS		2655	—	122	—		1204	—	462	—
FRAME 5, 2 PASS		1965	1909	53	50		891	866	199	190
FRAME 6, 1 AND 3 PASS		3330	—	139	—		1510	—	524	—
FRAME 6, 2 PASS		2425	2451	58	58		1100	1112	218	218
FRAME 7, 1 AND 3 PASS		5294	—	309	—		2401	—	1170	—
FRAME 7, 2 PASS		4140	4652	146	94		1878	2110	553	356
FRAME 8, 1 AND 3 PASS		6222	—	364	—		2822	—	1376	—
FRAME 8, 2 PASS		4952	4559	161	94		2246	2068	609	355

*Add to heat exchanger data for total weights or volumes.

NOTE: For the total weight of a vessel with a marine waterbox, add these values to the heat exchanger weights (or volumes).

Table 20 — 19XR,XRV Compressor Weights

COMPONENT	FRAME 2 COMPRESSOR WEIGHT		FRAME 3 COMPRESSOR WEIGHT		FRAME 4 COMPRESSOR WEIGHT (Without Split Ring Diffuser)		FRAME 4 COMPRESSOR WEIGHT (With Split Ring Diffuser)		FRAME 5 COMPRESSOR WEIGHT		FRAME E COMPRESSOR WEIGHT	
	lb	kg	lb	kg	lb	kg	lb	kg	lb	kg	lb	kg
SUCTION ELBOW	116	53	185	84	239	108	239	108	407	185	645	293
DISCHARGE ELBOW	100	45	125	57	157	71	157	71	325	147	290	132
TRANSMISSION*	320	145	400	181	656	298	656	298	1000	454	961	436
SUCTION HOUSING	370	168	400	181	585	265	810	367	1200	544	531	241
IMPELLER SHROUD	35	16	79	36	126	57	200	91	500	227	N/A	N/A
COMPRESSOR BASE	1260	572	1565	710	1589	721	2020	916	3700	1678	2491	1130
DIFFUSER	35	16	67	30	130	59	130	59	350	159	N/A	N/A
OIL PUMP	125	57	150	68	150	68	150	68	185	84	125	57
HIGH SPEED SHAFT ASSEMBLY	15	7	12	5	30	14	30	14	65	29	94	43
IMPELLER†	5	2	8	4	15	7	15	7	50	23	10 (avg)	5 (avg)
INTAKE WALL	—	—	—	—	—	—	—	—	—	—	89	40
DISCHARGE WALL	—	—	—	—	—	—	—	—	—	—	85	39
DIAPHRAGM	—	—	—	—	—	—	—	—	—	—	87	39
MISCELLANEOUS (Incl. Low Speed Gear)	135	61	135	61	144	65	200	91	235	107	390	177
TOTAL COMPRESSOR WEIGHT (Less Motor and Elbows)	2300	1043	2816	1277	3425	1553	4211	1910	7285	3304	4873	2212

*Transmission weight does not include rotor, shaft, and gear.
†For two-stage compressors (Frame E) there are two impellers. Weight listed is for each one.

NOTE: The weights indicated do not include motor, stator, rotor, low speed shaft, motor case, motor end cover, or any other related components. See Tables 21A-21E.

Table 21A — 19XR,XRV Compressor and Motor Weights*— Standard and High-Efficiency Motors — Compressor Frame Size 2†

MOTOR CODE	ENGLISH						SI					
	Compressor Weight** (lb)	60 Hz		50 Hz		End Bell Cover Weight (lb)	Compressor Weight** (kg)	60 Hz		50 Hz		End Bell Cover Weight (kg)
		Stator Weight†† (lb)	Rotor Weight (lb)	Stator Weight†† (lb)	Rotor Weight (lb)			Stator Weight†† (kg)	Rotor Weight (kg)	Stator Weight†† (kg)	Rotor Weight (kg)	
STANDARD-EFFICIENCY MOTORS / LOW VOLTAGE (200-575 v)												
BDS	2300	900	190	915	205	185	1043	408	86	415	93	84
BES	2300	915	200	965	220	185	1043	415	91	438	100	84
BFS	2300	975	215	1000	230	185	1043	442	98	454	104	84
BGS	2300	1000	230	1060	250	185	1043	454	104	481	113	84
BHS	2300	1030	240	1105	265	185	1043	467	109	501	120	84
BJS	2300	1105	265	—	—	185	1043	501	120	—	—	84
HIGH-EFFICIENCY MOTORS / LOW VOLTAGE (200-575 v)												
BDH	2300	1030	240	1030	240	185	1043	467	109	467	109	84
BEH	2300	1070	250	1070	250	185	1043	485	113	485	113	84
BFH	2300	1120	265	1120	265	185	1043	508	120	508	120	84
BGH	2300	1175	290	1175	290	185	1043	533	132	533	132	84
BHH	2300	1175	290	1175	290	185	1043	533	132	533	132	84
BJH	2300	1175	290	—	—	185	1043	533	132	—	—	84
JBH	2300	1003	226	1063	248	185	1043	455	103	482	112	84
JCH	2300	1063	248	1113	263	185	1043	482	112	505	119	84
JDH	2300	1113	263	1149	278	185	1043	505	119	521	126	84
JEH	2300	1149	278	1196	295	185	1043	521	126	542	134	84
JFH	2300	1196	295	—	—	185	1043	542	134	—	—	84

*Total compressor weight is the sum of the compressor aerodynamic components (compressor weight column), stator, rotor, and end bell cover weights.
†See Fig. 1 on page 6.

**Compressor aerodynamic component weight only, motor weight not included. Applicable to standard compressors only. For high lift compressors, contact Carrier Chiller Marketing for weights.
††Stator weight includes the stator and shell.

Table 21B — 19XR,XRV Compressor and Motor Weights*— Standard and High-Efficiency Motors — Compressor Frame Size 3†

MOTOR CODE	ENGLISH						SI					
	Compressor Weight** (lb)	60 Hz		50 Hz		End Bell Cover Weight (lb)	Compressor Weight** (kg)	60 Hz		50 Hz		End Bell Cover Weight (kg)
		Stator Weight†† (lb)	Rotor Weight (lb)	Stator Weight†† (lb)	Rotor Weight (lb)			Stator Weight†† (kg)	Rotor Weight (kg)	Stator Weight†† (kg)	Rotor Weight (kg)	
STANDARD-EFFICIENCY MOTORS / LOW VOLTAGE (200-575 v)												
CBS	2816	1146	219	1188	236	274	1277	520	99	539	107	124
CCS	2816	1171	227	1196	242	274	1277	531	103	542	110	124
CDS	2816	1198	237	1258	255	274	1277	543	108	571	116	124
CES	2816	1207	240	1272	258	274	1277	547	109	577	117	124
CLS	2816	1247	249	1328	273	274	1277	566	113	602	124	124
CMS	2816	1270	257	1353	278	274	1277	576	117	614	126	124
CNS	2816	1321	266	1386	282	274	1277	599	121	629	128	124
CPS	2816	1334	269	1401	287	274	1277	605	122	635	130	124
CQS	2816	1353	276	1408	290	274	1277	614	125	639	132	124
CRS	2816	1259	321	—	—	274	1277	571	146	—	—	124
CRS (380v)	2816	1328	346	—	—	274	1277	602	157	—	—	124
STANDARD-EFFICIENCY MOTORS / MEDIUM VOLTAGE (2400-4160 v)												
CBS	2816	1154	236	1160	255	274	1277	523	107	526	116	124
CCS	2816	1182	243	1177	260	274	1277	536	110	534	118	124
CDS	2816	1220	252	1212	270	274	1277	553	114	550	122	124
CES	2816	1253	261	1259	281	274	1277	568	118	571	127	124
CLS	2816	1261	265	1271	284	274	1277	572	120	577	129	124
CMS	2816	1294	273	1318	293	274	1277	587	124	598	133	124
CNS	2816	1314	280	1357	303	274	1277	596	127	616	137	124
CPS	2816	1343	282	1413	308	274	1277	609	128	641	140	124
CQS	2816	1419	300	1522	336	274	1277	644	136	690	152	124
HIGH-EFFICIENCY MOTORS / LOW VOLTAGE (200-575 v)												
CBH	2816	1235	239	1290	254	274	1277	560	108	585	115	124
CCH	2816	1260	249	1295	259	274	1277	572	113	587	117	124
CDH	2816	1286	258	1358	273	274	1277	583	117	616	124	124
CEH	2816	1305	265	1377	279	274	1277	592	120	625	127	124
CLH	2816	1324	271	1435	292	274	1277	601	123	651	132	124
CMH	2816	1347	275	1455	298	274	1277	611	125	660	135	124
CNH	2816	1358	278	1467	301	274	1277	616	126	665	137	124
CPH	2816	1401	290	1479	304	274	1277	635	132	671	138	124
CQH	2816	1455	304	1479	304	274	1277	670	138	671	138	124
KBH	2816	1313	276	1353	285	274	1277	596	125	614	129	124
KCH	2816	1353	285	1381	291	274	1277	614	129	626	132	124
KDH	2816	1381	291	1417	307	274	1277	626	132	643	139	124
KEH	2816	1417	307	1441	313	274	1277	643	139	654	142	124
KFH	2816	1441	313	1470	320	274	1277	654	142	667	145	124
KGH	2816	1470	320	1505	333	274	1277	667	145	683	151	124
KHH	2816	1505	333	—	—	274	1277	683	151	—	—	124

*Total compressor weight is the sum of the compressor aerodynamic components (compressor weight column), stator, rotor, and end bell cover weights.
†See Fig. 1 on page 6.

**Compressor aerodynamic component weight only, motor weight not included. Applicable to standard compressors only. For high lift compressors, contact Carrier Chiller Marketing for weights.
††Stator weight includes the stator and shell.

Table 21B — 19XR,XRV Compressor and Motor Weights*— Standard and High-Efficiency Motors — Compressor Frame Size 3† (cont)

MOTOR CODE	ENGLISH						SI					
	Compressor Weight** (lb)	60 Hz		50 Hz		End Bell Cover Weight (lb)	Compressor Weight** (kg)	60 Hz		50 Hz		End Bell Cover Weight (kg)
		Stator Weight†† (lb)	Rotor Weight (lb)	Stator Weight†† (lb)	Rotor Weight (lb)			Stator Weight†† (kg)	Rotor Weight (kg)	Stator Weight†† (kg)	Rotor Weight (kg)	
HIGH-EFFICIENCY MOTORS / MEDIUM VOLTAGE (2400-4160 v)												
CBH	2816	1114	242	1156	255	274	1277	505	110	524	116	124
CCH	2816	1129	247	1163	257	274	1277	512	112	528	117	124
CDH	2816	1155	253	1190	263	274	1277	524	115	540	119	124
CEH	2816	1175	263	1236	276	274	1277	533	119	561	125	124
CLH	2816	1242	280	1305	296	274	1277	563	127	592	134	124
CMH	2816	1321	303	1305	296	274	1277	599	137	592	134	124
CNH	2816	1369	316	1386	316	274	1277	621	143	629	143	124
CPH	2816	1411	329	1386	316	274	1277	640	149	629	143	124
CQH	2816	1411	329	1428	329	274	1277	640	149	648	149	124

*Total compressor weight is the sum of the compressor aerodynamic components (compressor weight column), stator, rotor, and end bell cover weights.
†See Fig. 1 on page 6.

**Compressor aerodynamic component weight only, motor weight not included. Applicable to standard compressors only. For high lift compressors, contact Carrier Chiller Marketing for weights.
††Stator weight includes the stator and shell.

Table 21C — 19XR,XRV Compressor and Motor Weights*— Standard and High-Efficiency Motors — Compressor Frame Size 4†

MOTOR CODE	ENGLISH						SI					
	Compressor Weight** (lb) Fixed Ring/ Split Ring	60 Hz		50 Hz		End Bell Cover Weight (lb)	Compressor Weight** (kg)	60 Hz		50 Hz		End Bell Cover Weight (kg)
		Stator Weight†† (lb)	Rotor Weight (lb)	Stator Weight†† (lb)	Rotor Weight (lb)			Stator Weight†† (kg)	Rotor Weight (kg)	Stator Weight†† (kg)	Rotor Weight (kg)	
STANDARD-EFFICIENCY MOTORS / LOW VOLTAGE (200-575 v)												
DBS	3425 / 4211	1570	324	1725	347	236	1554 / 1910	712	147	782	157	107
DCS	3425 / 4211	1580	326	1737	352	236	1554 / 1910	717	148	788	160	107
DDS	3425 / 4211	1595	329	1749	357	236	1554 / 1910	723	149	793	162	107
DES	3425 / 4211	1685	345	1762	365	236	1554 / 1910	764	156	799	166	107
DFS	3425 / 4211	1690	348	1801	372	236	1554 / 1910	767	158	817	169	107
DGS	3425 / 4211	1692	352	1858	386	236	1554 / 1910	767	160	843	175	107
DHS	3425 / 4211	1774	366	1904	398	236	1554 / 1910	805	166	864	181	107
DJS	3425 / 4211	—	—	2020	401	318	1554 / 1910	—	—	916	182	142
STANDARD-EFFICIENCY MOTORS / MEDIUM VOLTAGE (2400-4160 v)												
DBS	3425 / 4211	1524	296	1637	327	236	1554 / 1910	691	134	743	148	107
DCS	3425 / 4211	1569	307	1685	354	236	1554 / 1910	712	139	764	161	107
DDS	3425 / 4211	1588	313	1713	357	236	1554 / 1910	720	142	777	162	107
DES	3425 / 4211	1613	324	1746	360	236	1554 / 1910	732	147	792	163	107
DFS	3425 / 4211	1675	347	1811	381	236	1554 / 1910	760	157	821	173	107
DGS	3425 / 4211	1704	355	1998	422	236 (60 Hz) 318 (50 Hz)	1554 / 1910	773	161	906	191	107 (60 Hz) 142 (50 Hz)
DHS	3425 / 4211	1737	361	2056	443	236 (60 Hz) 318 (50 Hz)	1554 / 1910	788	164	933	201	107 (60 Hz) 142 (50 Hz)
DJS	3425 / 4211	1769	365	2101	464	236 (60 Hz) 318 (50 Hz)	1554 / 1910	802	166	953	210	107 (60 Hz) 142 (50 Hz)
STANDARD-EFFICIENCY MOTORS / MEDIUM VOLTAGE (6300-6900 v)												
DDS	3425 / 4211	1919	423	2069	458	318	1554 / 1910	870	192	938	208	142
DES	3425 / 4211	1939	428	2089	463	318	1554 / 1910	880	194	947	210	142
DFS	3425 / 4211	1989	448	2139	478	318	1554 / 1910	902	203	970	217	142
DGS	3425 / 4211	2054	473	—	—	318	1554 / 1910	932	215	—	—	142
DHS	3425 / 4211	2099	488	—	—	318	1554 / 1910	952	221	—	—	142
DJS	3425 / 4211	2159	508	—	—	318	1554 / 1910	979	230	—	—	142
HIGH-EFFICIENCY MOTORS / LOW VOLTAGE (200-575 v)												
DBH	3425 / 4211	1773	406	1827	406	318	1554 / 1910	804	184	829	184	142
DCH	3425 / 4211	1827	406	1827	414	318	1554 / 1910	829	184	829	188	142
DDH	3425 / 4211	1827	414	1881	422	318	1554 / 1910	829	188	853	191	142
DEH	3425 / 4211	1881	422	1881	422	318	1554 / 1910	853	191	853	191	142
DFH	3425 / 4211	1881	439	1963	439	318	1554 / 1910	853	199	890	199	142
DGH	3425 / 4211	1963	455	1963	455	318	1554 / 1910	890	206	890	206	142
DHH	3425 / 4211	1963	455	2050	463	318	1554 / 1910	890	206	930	210	142
DJH	3425 / 4211	—	—	2050	471	318	1554 / 1910	—	—	930	213	142
DKH	3425 / 4211	2050	471	—	—	318	1554 / 1910	930	214	—	—	142

*Total compressor weight is the sum of the compressor aerodynamic components (compressor weight column), stator, rotor, and end bell cover weights.
†See Fig. 1 on page 6.

**Compressor aerodynamic component weight only, motor weight not included. Applicable to standard compressors only. For high lift compressors, contact Carrier Chiller Marketing for weights.
††Stator weight includes the stator and shell.

Table 21C — 19XR,XRV Compressor and Motor Weights*— Standard and High-Efficiency Motors — Compressor Frame Size 4† (cont)

MOTOR CODE	ENGLISH						SI					
	Compressor Weight** (lb)	60 Hz		50 Hz		End Bell Cover Weight (lb)	Compressor Weight** (kg)	60 Hz		50 Hz		End Bell Cover Weight (kg)
		Stator Weight†† (lb)	Rotor Weight (lb)	Stator Weight†† (lb)	Rotor Weight (lb)			Stator Weight†† (kg)	Rotor Weight (kg)	Stator Weight†† (kg)	Rotor Weight (kg)	
HIGH-EFFICIENCY MOTORS / LOW VOLTAGE (200-575v)												
LBH	3425 / 4211	1873	364	1939	389	318	1554 / 1910	850	165	880	176	144
LCH	3425 / 4211	1939	389	2023	406	318	1554 / 1910	880	176	918	184	144
LDH	3425 / 4211	2023	406	2043	417	318	1554 / 1910	918	184	927	189	144
LEH	3425 / 4211	2043	417	2096	434	318	1554 / 1910	927	189	951	197	144
LFH	3425 / 4211	2096	434	2133	444	318	1554 / 1910	951	197	968	201	144
LGH	3425 / 4211	2133	444	2199	458	318	1554 / 1910	968	201	997	208	144
LHH	3425 / 4211	2199	458	2066	437	318	1554 / 1910	997	208	937	198	144
HIGH-EFFICIENCY MOTORS / MEDIUM VOLTAGE (2400-4160v)												
DBH	3425 / 4211	1950	405	1950	405	318	1554 / 1910	885	184	885	184	144
DCH	3425 / 4211	1950	405	2025	429	318	1554 / 1910	885	184	919	195	144
DDH	3425 / 4211	1950	405	2025	429	318	1554 / 1910	885	184	919	195	144
DEH	3425 / 4211	2025	429	2100	452	318	1554 / 1910	919	195	953	205	144
DFH	3425 / 4211	2025	429	2100	452	318	1554 / 1910	919	195	953	205	144
DGH	3425 / 4211	2100	452	2200	480	318	1554 / 1910	953	205	998	218	144
DHH	3425 / 4211	2100	452	2320	575	318	1554 / 1910	953	205	1052	261	144
DJH	3425 / 4211	2100	452	2320	587	318	1554 / 1910	953	205	1052	266	144
DKH	3425 / 4211	2320	587	—	—	318	1554 / 1910	1052	266	—	—	144
HIGH-EFFICIENCY MOTORS / MEDIUM VOLTAGE (6300-6900v)												
DDH	3425 / 4211	2150	536	2250	546	318	1554 / 1910	975	243	1021	248	144
DEH	3425 / 4211	2150	550	2250	550	318	1554 / 1910	975	249	1021	249	144
DFH	3425 / 4211	2250	575	2380	567	318	1554 / 1910	1021	261	1080	261	144
DGH	3425 / 4211	2250	599	2380	599	318	1554 / 1910	1021	272	1080	272	144
DHH	3425 / 4211	2380	604	2380	604	318	1554 / 1910	1080	274	1080	274	144
DJH	3425 / 4211	2380	614	2380	614	318	1554 / 1910	1080	279	1080	279	144
DKH	3425 / 4211	2380	614	—	—	318	1554 / 1910	1080	279	—	—	144

*Total compressor weight is the sum of the compressor aerodynamic components (compressor weight column), stator, rotor, and end bell cover weights.
†Compressor size number is the first digit of the compressor code. See Fig. 1 on page 6.

**Compressor aerodynamic component weight only, motor weight not included. Applicable to standard compressors only. For high lift compressors, contact Carrier Chiller Marketing for weights.
††Stator weight includes the stator and shell.

Table 21D — 19XR,XRV Compressor and Motor Weights*— Standard and High-Efficiency Motors — Compressor Frame Size 5†

MOTOR CODE	ENGLISH						SI					
	Compressor Weight** (lb)	60 Hz		50 Hz		End Bell Cover Weight (lb)	Compressor Weight** (kg)	60 Hz		50 Hz		End Bell Cover Weight (kg)
		Stator Weight†† (lb)	Rotor Weight (lb)	Stator Weight†† (lb)	Rotor Weight (lb)			Stator Weight†† (kg)	Rotor Weight (kg)	Stator Weight†† (kg)	Rotor Weight (kg)	
STANDARD-EFFICIENCY MOTORS / LOW VOLTAGE (200-575 v)												
EHS	7285	2843	741	2943	775	414	3304	1290	336	1335	352	188
EJS	7285	2826	741	2943	775	414	3304	1281	336	1335	352	188
EKS	7285	2943	775	2997	810	414	3304	1335	352	1359	367	188
ELS	7285	2932	775	2997	810	414	3304	1330	352	1359	367	188
EMS	7285	2986	810	3096	862	414	3304	1354	367	1404	391	188
ENS	7285	2986	810	3203	914	414	3304	1354	367	1453	415	188
EPS	7285	2986	810	3203	914	414	3304	1354	367	1453	415	188
EQS	7285	3013	621	—	—	414	3304	1367	282	—	—	188
STANDARD-EFFICIENCY MOTORS / MEDIUM VOLTAGE (2400-4160 v)												
EHS	7285	2744	706	2818	741	414	3304	1245	320	1278	336	188
EJS	7285	2816	741	2892	775	414	3304	1277	336	1312	352	188
EKS	7285	2816	741	2930	775	414	3304	1277	336	1329	352	188
ELS	7285	2808	741	3005	810	414	3304	1274	336	1363	367	188
EMS	7285	2892	775	3005	810	414	3304	1322	352	1363	367	188
ENS	7285	2997	775	3143	879	414	3304	1359	352	1426	399	188
EPS	7285	2967	810	3144	879	414	3304	1346	367	1426	399	188
EQS	7285	3081	872	—	—	414	3304	1398	396	—	—	188
STANDARD-EFFICIENCY MOTORS / MEDIUM VOLTAGE (6300-6900 v)												
EHS	7285	2773	735	2845	769	414	3304	1258	333	1290	349	188
EJS	7285	2855	769	2855	769	414	3304	1295	349	1295	349	188
EKS	7285	2919	803	2919	803	414	3304	1324	364	1324	364	188
ELS	7285	2908	803	3058	871	414	3304	1319	364	1387	395	188
EMS	7285	3029	854	3068	871	414	3304	1374	387	1392	395	188
ENS	7285	3023	854	3281	974	414	3304	1371	387	1488	442	188
EPS	7285	3068	871	3288	974	414	3304	1392	395	1491	442	188
HIGH-EFFICIENCY MOTORS / LOW VOLTAGE (200-575 v)												
EHH	7285	2939	776	2995	810	414	3304	1333	352	1359	367	188
EJH	7285	2944	776	3002	810	414	3304	1335	352	1362	367	188
EKH	7285	2992	810	3110	862	414	3304	1357	367	1411	391	188
ELH	7285	2299	810	3099	862	414	3304	1043	367	1406	391	188
EMH	7285	2965	810	3210	914	414	3304	1345	367	1456	415	188
ENH	7285	3015	855	3293	974	414	3304	1368	388	1494	442	188
EPH	7285	3029	855	3289	974	414	3304	1374	388	1492	442	188
EQH	7285	3162	664	—	—	414	3304	1434	301	—	—	188

*Total compressor weight is the sum of the compressor aerodynamic components (compressor weight column), stator, rotor, and end bell cover weights.
†See Fig. 1 on page 6.

**Compressor aerodynamic component weight only, motor weight not included. Applicable to standard compressors only. For high lift compressors, contact Carrier Chiller Marketing for weights.
††Stator weight includes the stator and shell.

Table 21D — 19XR,XRV Compressor and Motor Weights*— Standard and High-Efficiency Motors — Compressor Frame Size 5† (cont)

MOTOR CODE	ENGLISH						SI					
	Compressor Weight** (lb)	60 Hz		50 Hz		End Bell Cover Weight (lb)	Compressor Weight** (kg)	60 Hz		50 Hz		End Bell Cover Weight (kg)
		Stator Weight†† (lb)	Rotor Weight (lb)	Stator Weight†† (lb)	Rotor Weight (lb)			Stator Weight†† (kg)	Rotor Weight (kg)	Stator Weight†† (kg)	Rotor Weight (kg)	
HIGH-EFFICIENCY MOTORS / LOW VOLTAGE (200-575 v)												
MBH	7285	2795	645	2856	665	414	3304	1268	293	1295	302	188
MCH	7285	2873	672	2925	693	414	3304	1303	305	1327	314	188
MDH	7285	2906	684	3013	724	414	3304	1318	310	1367	328	188
MEH	7285	2956	704	3071	737	414	3304	1341	319	1392	334	188
MFH	7285	3034	724	3153	791	414	3304	1376	328	1430	359	188
MGH	7285	3071	737	—	—	414	3304	1393	334	—	—	188
HIGH-EFFICIENCY MOTORS / MEDIUM VOLTAGE (2400-4160 v)												
EHH	7285	2939	776	2997	810	414	3304	1333	352	1359	367	188
EJH	7285	2999	810	3108	862	414	3304	1360	367	1410	391	188
EKH	7285	2988	810	3102	862	414	3304	1355	367	1407	391	188
ELH	7285	2981	810	3065	872	414	3304	1352	367	1390	396	188
EMH	7285	3031	855	3077	872	414	3304	1375	388	1396	396	188
ENH	7285	3075	872	3260	974	414	3304	1395	396	1479	442	188
EPH	7285	3081	872	3298	974	414	3304	1398	396	1496	442	188
EQH	7285	3195	657	—	—	414	3304	1449	298	—	—	188
HIGH-EFFICIENCY MOTORS / MEDIUM VOLTAGE (6300-6900 v)												
EHH	7285	2998	810	3097	862	414	3304	1360	367	1405	391	188
EJH	7285	3029	855	3100	862	414	3304	1374	388	1406	391	188
EKH	7285	3049	855	3064	872	414	3304	1383	388	1390	396	188
ELH	7285	3068	872	3060	872	414	3304	1390	396	1388	396	188
EMH	7285	—	—	3072	872	414	3304	—	—	1393	396	188
ENH	7285	3075	872	3260	974	414	3304	1395	396	1479	442	188
EPH	7285	3081	872	3288	974	414	3304	1398	396	1491	442	188
EQH	7285	3195	657	—	—	414	3304	1449	298	—	—	188
HIGH-EFFICIENCY MOTORS / HIGH VOLTAGE (10000-11000 v)												
MCH	7285	—	—	3956	678	414	3304	—	—	1794	308	188
MDH	7285	—	—	3956	678	414	3304	—	—	1794	308	188
MFH	7285	—	—	4062	719	414	3304	—	—	1842	326	188
MGH	7285	3820	657	—	—	414	3304	1733	298	—	—	188
MHH	7285	3820	657	—	—	414	3304	1733	298	—	—	188
HIGH-EFFICIENCY MOTORS / HIGH VOLTAGE (13800 v)												
MHH	7285	3779	646	—	—	414	3304	1714	293	—	—	188

*Total compressor weight is the sum of the compressor aerodynamic components (compressor weight column), stator, rotor, and end bell cover weights.
†See Fig. 1 on page 6.

**Compressor aerodynamic component weight only, motor weight not included. Applicable to standard compressors only. For high lift compressors, contact Carrier Chiller Marketing for weights.
††Stator weight includes the stator and shell.

Table 21E — 19XR,XRV Compressor and Motor Weights*— Standard and High-Efficiency Motors — Compressor Frame Size E†

MOTOR CODE	ENGLISH						SI					
	Compressor Weight** (lb)	60 Hz		50 Hz		End Bell Cover Weight (lb)	Compressor Weight** (kg)	60 Hz		50 Hz		End Bell Cover Weight (kg)
		Stator Weight†† (lb)	Rotor Weight (lb)	Stator Weight†† (lb)	Rotor Weight (lb)			Stator Weight†† (kg)	Rotor Weight (kg)	Stator Weight†† (kg)	Rotor Weight (kg)	
STANDARD-EFFICIENCY MOTORS / LOW VOLTAGE (380-575 v)												
6H	4873	2843	741	2943	775	414	2212	1290	336	1335	352	188
6J	4873	2826	741	2943	775	414	2212	1281	336	1335	352	188
6K	4873	2943	775	2997	810	414	2212	1335	352	1359	367	188
6L	4873	2932	775	2997	810	414	2212	1330	352	1359	367	188
6M	4873	2986	810	3096	862	414	2212	1354	367	1404	391	188
6N	4873	2986	810	3203	914	414	2212	1354	367	1453	415	188
6P	4873	2986	810	3203	914	414	2212	1354	367	1453	415	188
STANDARD-EFFICIENCY MOTORS / MEDIUM VOLTAGE (2400-4160 v)												
6H	4873	2744	706	2818	741	414	2212	1245	320	1278	336	188
6J	4873	2816	741	2892	775	414	2212	1277	336	1312	352	188
6K	4873	2816	741	2930	775	414	2212	1277	336	1329	352	188
6L	4873	2808	741	3005	810	414	2212	1274	336	1363	367	188
6M	4873	2892	775	3005	810	414	2212	1322	352	1363	367	188
6N	4873	2997	775	3143	879	414	2212	1359	352	1426	399	188
6P	4873	2967	810	3144	879	414	2212	1346	367	1426	399	188
6Q	4873	3081	872	—	—	414	2212	1398	396	—	—	188
HIGH-EFFICIENCY MOTORS / LOW VOLTAGE (380-460 v)												
EH	4873	2939	776	2995	810	414	2212	1333	352	1359	367	188
EJ	4873	2944	776	3002	810	414	2212	1335	352	1362	367	188
EK	4873	2992	810	3110	862	414	2212	1357	367	1411	391	188
EL	4873	2299	810	3099	862	414	2212	1043	367	1406	391	188
EM	4873	2965	810	3210	914	414	2212	1345	367	1456	415	188
EN	4873	3015	855	3293	974	414	2212	1368	388	1494	442	188
EP	4873	3029	855	3289	974	414	2212	1374	388	1492	442	188

*Total compressor weight is the sum of the compressor aerodynamic components (compressor weight column), stator, rotor, and end bell cover weights.
†See Fig. 1 on page 6.

**Compressor aerodynamic component weight only, motor weight not included. Applicable to standard compressors only. For high lift compressors, contact Carrier Chiller Marketing for weights.
††Stator weight includes the stator and shell.

Table 21E — 19XR,XRV Compressor and Motor Weights*— Standard and High-Efficiency Motors — Compressor Frame Size E† (cont)

MOTOR CODE	ENGLISH						SI					
	Compressor Weight** (lb)	60 Hz		50 Hz		End Bell Cover Weight (lb)	Compressor Weight** (kg)	60 Hz		50 Hz		End Bell Cover Weight (kg)
		Stator Weight†† (lb)	Rotor Weight (lb)	Stator Weight†† (lb)	Rotor Weight (lb)			Stator Weight†† (kg)	Rotor Weight (kg)	Stator Weight†† (kg)	Rotor Weight (kg)	
HIGH-EFFICIENCY MOTORS / LOW VOLTAGE (400-460 v)												
MB	4873	2795	645	2856	665	414	2212	1268	293	1295	302	188
MC	4873	2873	672	2925	693	414	2212	1303	305	1327	314	188
MD	4873	2906	684	3013	724	414	2212	1318	310	1367	328	188
ME	4873	2956	704	3071	737	414	2212	1341	319	1392	334	188
MF	4873	3034	724	3153	791	414	2212	1376	328	1430	359	188
MG	4873	3071	737	—	—	414	2212	1393	334	—	—	188
HIGH-EFFICIENCY MOTORS / MEDIUM VOLTAGE (2400-4160 v)												
EH	4873	2939	776	2997	810	414	2212	1333	352	1359	367	188
EJ	4873	2999	810	3108	862	414	2212	1360	367	1410	391	188
EK	4873	2988	810	3102	862	414	2212	1355	367	1407	391	188
EL	4873	2981	810	3065	872	414	2212	1352	367	1390	396	188
EM	4873	3031	855	3077	872	414	2212	1375	388	1396	396	188
EN	4873	3075	872	3260	974	414	2212	1395	396	1479	442	188
EP	4873	3081	872	3298	974	414	2212	1398	396	1496	442	188
HIGH-EFFICIENCY MOTORS / MEDIUM VOLTAGE (6300-6900 v)												
EH	4873	2998	810	3097	862	414	2212	1360	367	1405	391	188
EJ	4873	3029	855	3100	862	414	2212	1374	388	1406	391	188
EK	4873	3049	855	3064	872	414	2212	1383	388	1390	396	188
EL	4873	3068	872	3060	872	414	2212	1390	396	1388	396	188
EM	4873	—	—	3072	872	414	2212	—	—	1393	396	188
EN	4873	3075	872	3260	974	414	2212	1395	396	1479	442	188
EP	4873	3081	872	3288	974	414	2212	1398	396	1491	442	188
HIGH-EFFICIENCY MOTORS / HIGH VOLTAGE (10000-11000 v)												
MD	4873	—	—	3956	678	414	2212	—	—	1794	308	188
MF	4873	—	—	4062	719	414	2212	—	—	1842	326	188
MH	4873	3820	657	—	—	414	2212	1733	298	—	—	188
HIGH-EFFICIENCY MOTORS / HIGH VOLTAGE (13800 v)												
MH	4873	3779	646	—	—	414	2212	1714	293	—	—	188

*Total compressor weight is the sum of the compressor aerodynamic components (compressor weight column), stator, rotor, and end bell cover weights.
†See Fig. 1 on page 6.

**Compressor aerodynamic component weight only, motor weight not included. Applicable to standard compressors only. For high lift compressors, contact Carrier Chiller Marketing for weights.
††Stator weight includes the stator and shell.

Table 22A — 19XR,XRV Waterbox Cover Weights — English (lb)

WATERBOX DESCRIPTION	COOLER					
	Frame 1		Frame 2		Frame 3	
	Standard Nozzles	Flanged	Standard Nozzles	Flanged	Standard Nozzles	Flanged
NIH, 1 Pass Cover, 150 psig	177	204	287	318	287	318
NIH, 2 Pass Cover, 150 psig	185	218	287	340	287	340
NIH, 3 Pass Cover, 150 psig	180	196	294	310	294	310
MWB End Cover, 150 psig	—	—	315	315	315	315
NIH/MWB Return Cover, 150 psig	136	136	243	243	243	243
NIH, 1 Pass Cover, 300 psig	248	301	411	486	411	486
NIH, 2 Pass Cover, 300 psig	255	324	411	518	411	518
NIH, 3 Pass Cover, 300 psig	253	288	433	468	433	468
NIH Plain End Cover, 300 psig	175	175	291	291	291	291
MWB End Cover, 300 psig	—	—	619	619	619	619
MWB Return Cover, 300 psig	—	—	445	445	445	445

WATERBOX DESCRIPTION	CONDENSER					
	Frame 1		Frame 2		Frame 3	
	Standard Nozzles	Flanged	Standard Nozzles	Flanged	Standard Nozzles	Flanged
NIH, 1 Pass Cover, 150 psig	177	204	260	297	260	297
NIH, 2 Pass Cover, 150 psig	185	218	265	318	265	318
NIH, 3 Pass Cover, 150 psig	180	196	272	288	272	288
MWB End Cover, 150 psig	—	—	234	234	234	234
NIH/MWB Return Cover, 150 psig	136	136	225	225	225	225
NIH, 1 Pass Cover, 300 psig	248	301	379	454	379	454
NIH, 2 Pass Cover, 300 psig	255	324	379	486	379	486
NIH, 3 Pass Cover, 300 psig	253	288	401	436	401	436
NIH Plain End Cover, 300 psig	175	175	270	270	270	270
MWB End Cover, 300 psig	—	—	474	474	474	474
MWB Return Cover, 300 psig	—	—	359	359	359	359

LEGEND

NIH — Nozzle-in-Head
MWB — Marine Waterbox

NOTE: Weight for NIH 2-pass cover, 150 psig, is included in the heat exchanger weights shown in Tables 18A and 18B.

Table 22A — 19XR,XRV Waterbox Cover Weights — English (lb) (cont)

WATERBOX DESCRIPTION	COOLER					
	Frame 4		Frame 5		Frame 6	
	Standard Nozzles	Flanged	Standard Nozzles	Flanged	Standard Nozzles	Flanged
NIH, 1 Pass Cover, 150 psig	148	185	168	229	187	223
NIH, 2 Pass Cover, 150 psig	202	256	224	276	257	330
NIH, 3 Pass Cover, 150 psig	473	489	617	634	765	791
MWB End Cover, 150 psig	317	317	393	393	487	487
NIH/MWB Return Cover, 150 psig	138	138	154	154	172	172
NIH, 1 Pass Cover, 300 psig	633	709	764	839	978	1053
NIH, 2 Pass Cover, 300 psig	626	689	761	867	927	1078
NIH, 3 Pass Cover, 300 psig	660	694	795	830	997	1050
NIH/MWB End Cover, 300 psig	522	522	658	658	834	834

WATERBOX DESCRIPTION	CONDENSER					
	Frame 4		Frame 5		Frame 6	
	Standard Nozzles	Flanged	Standard Nozzles	Flanged	Standard Nozzles	Flanged
NIH, 1 Pass Cover, 150 psig	148	185	168	229	187	223
NIH, 2 Pass Cover, 150 psig	191	245	224	298	245	330
NIH, 3 Pass Cover, 150 psig	503	519	629	655	772	843
MWB End Cover and Bolt-on End Cover, 150 psig	317	317	393	393	487	487
NIH/MWB Return Cover, 150 psig	138	138	154	154	172	172
NIH, 1 Pass Cover, 300 psig	633	709	764	839	978	1053
NIH, 2 Pass Cover, 300 psig	622	729	727	878	923	1074
NIH, 3 Pass Cover, 300 psig	655	689	785	838	995	1049
NIH/MWB End Cover, 300 psig	522	522	658	658	834	834

LEGEND

NIH — Nozzle-in-Head
MWB — Marine Waterbox

NOTE: Weight for NIH 2-pass cover, 150 psig, is included in the heat exchanger weights shown in Tables 18A and 18B.

Table 22A — 19XR,XRV Waterbox Cover Weights — English (lb) (cont)

WATERBOX DESCRIPTION	COOLER			
	FRAME 7		FRAME 8	
	Standard Nozzles	Flanged	Standard Nozzles	Flanged
NIH, 1 Pass Cover, 150 psig	329	441	417	494
NIH, 2 Pass Cover, 150 psig	426	541	540	693
NIH, 3 Pass Cover, 150 psig	1250	1291	1629	1687
MWB End Cover, 150 psig	844	844	1125	1125
NIH/MWB Return Cover, 150 psig	315	315	404	404
NIH, 1 Pass Cover, 300 psig	1712	1883	2359	2523
NIH, 2 Pass Cover, 300 psig	1662	1908	2369	2599
NIH, 3 Pass Cover, 300 psig	1724	1807	2353	2516
NIH/MWB End Cover, 300 psig	1378	1378	1951	1951

WATERBOX DESCRIPTION	CONDENSER			
	Frame 7		Frame 8	
	Standard Nozzles	Flanged	Standard Nozzles	Flanged
NIH, 1 Pass Cover, 150 psig	329	441	417	494
NIH, 2 Pass Cover, 150 psig	404	520	508	662
NIH, 3 Pass Cover, 150 psig	1222	1280	1469	1527
MWB End Cover, 150 psig	781	781	1007	1007
Bolt-on MWB End Cover, 150 psig	700	700	1307	1307
NIH/MWB Return Cover, 150 psig	315	315	404	404
NIH, 1 Pass Cover, 300 psig	1690	1851	1986	2151
NIH, 2 Pass Cover, 300 psig	1628	1862	1893	2222
NIH, 3 Pass Cover, 300 psig	1714	1831	1993	2112
NIH/MWB End Cover, 300 psig	1276	1276	1675	1675

LEGEND

NIH — Nozzle-in-Head
MWB — Marine Waterbox

NOTE: Weight for NIH 2-pass cover, 150 psig, is included in the heat exchanger weights shown in Tables 18A and 18B.

Table 22B — 19XR,XRV Waterbox Cover Weights — SI (kg)

WATERBOX DESCRIPTION	COOLER					
	FRAME 1		FRAME 2		FRAME 3	
	Standard Nozzles	Flanged	Standard Nozzles	Flanged	Standard Nozzles	Flanged
NIH, 1 Pass Cover, 1034 kPa	80	92	130	144	130	144
NIH, 2 Pass Cover, 1034 kPa	84	99	130	154	130	154
NIH, 3 Pass Cover, 1034 kPa	82	88	133	141	133	141
MWB End Cover, 1034 kPa	—	—	143	143	143	143
NIH/MWB Return Cover, 1034 kPa	62	62	110	110	110	110
NIH, 1 Pass Cover, 2068 kPa	112	137	186	220	186	220
NIH, 2 Pass Cover, 2068 kPa	116	147	186	235	186	235
NIH, 3 Pass Cover, 2068 kPa	115	131	196	212	196	212
NIH Plain End Cover, 2068 kPa	79	79	132	132	132	132
MWB End Cover, 2068 kPa	—	—	281	281	281	281
MWB Return Cover, 2068 kPa	—	—	202	202	202	202

WATERBOX DESCRIPTION	CONDENSER					
	Frame 1		Frame 2		Frame 3	
	Standard Nozzles	Flanged	Standard Nozzles	Flanged	Standard Nozzles	Flanged
NIH, 1 Pass Cover, 1034 kPa	80	92	118	135	118	135
NIH, 2 Pass Cover, 1034 kPa	84	99	120	144	120	144
NIH, 3 Pass Cover, 1034 kPa	82	88	123	131	123	131
MWB End Cover, 1034 kPa	—	—	106	106	106	106
NIH/MWB Return Cover, 1034 kPa	62	62	102	102	102	102
NIH, 1 Pass Cover, 2068 kPa	112	137	172	206	172	206
NIH, 2 Pass Cover, 2068 kPa	116	147	172	220	172	220
NIH, 3 Pass Cover, 2068 kPa	115	131	182	198	182	198
NIH Plain End Cover, 2068 kPa	79	79	122	122	122	122
MWB End Cover, 2068 kPa	—	—	215	215	215	215
MWB Return Cover, 2068 kPa	—	—	163	163	163	163

LEGEND

NIH — Nozzle-in-Head
MWB — Marine Waterbox

NOTE: Weight for NIH 2-pass cover, 1034 kPa, is included in the heat exchanger weights shown in Table 18A and 18B.

Table 22B — 19XR,XRV Waterbox Cover Weights — SI (kg) (cont)

WATERBOX DESCRIPTION	COOLER					
	Frame 4		Frame 5		Frame 6	
	Standard Nozzles	Flanged	Standard Nozzles	Flanged	Standard Nozzles	Flanged
NIH, 1 Pass Cover, 1034 kPa	67	84	76	104	85	101
NIH, 2 Pass Cover, 1034 kPa	92	116	102	125	117	150
NIH, 3 Pass Cover, 1034 kPa	215	222	280	288	347	359
MWB End Cover, 1034 kPa	144	144	178	178	221	221
NIH/MWB Return Cover, 1034 kPa	63	63	70	70	78	78
NIH, 1 Pass Cover, 2068 kPa	287	322	347	381	444	478
NIH, 2 Pass Cover, 2068 kPa	284	313	345	394	420	489
NIH, 3 Pass Cover, 2068 kPa	299	315	361	376	452	476
NIH/MWB End Cover, 2068 kPa	237	237	298	298	378	378

WATERBOX DESCRIPTION	CONDENSER					
	Frame 4		Frame 5		Frame 6	
	Standard Nozzles	Flanged	Standard Nozzles	Flanged	Standard Nozzles	Flanged
NIH, 1 Pass Cover, 1034 kPa	67	84	76	104	85	101
NIH, 2 Pass Cover, 1034 kPa	87	111	102	135	111	150
NIH, 3 Pass Cover, 1034 kPa	228	235	285	297	350	382
MWB End Cover and Bolt-on End Cover, 1034 kPa	144	144	178	178	221	221
NIH/MWB Return Cover, 1034 kPa	63	63	70	70	78	78
NIH, 1 Pass Cover, 2068 kPa	287	322	347	381	444	478
NIH, 2 Pass Cover, 2068 kPa	282	331	330	393	419	487
NIH, 3 Pass Cover, 2068 kPa	297	313	356	376	451	476
NIH/MWB End Cover, 2068 kPa	237	237	298	298	378	378

LEGEND

NIH — Nozzle-in-Head
MWB — Marine Waterbox

NOTE: Weight for NIH 2-pass cover, 1034 kPa, is included in the heat exchanger weights shown in Tables 18A and 18B.

Table 22B — 19XR,XRV Waterbox Cover Weights — SI (kg) (cont)

WATERBOX DESCRIPTION	COOLER			
	Frame 7		Frame 8	
	Standard Nozzles	Flanged	Standard Nozzles	Flanged
NIH, 1 Pass Cover, 1034 kPa	149	200	189	224
NIH, 2 Pass Cover, 1034 kPa	193	245	245	314
NIH, 3 Pass Cover, 1034 kPa	567	586	739	765
MWB End Cover, 1034 kPa	383	383	510	510
NIH/MWB Return Cover, 1034 kPa	143	143	183	183
NIH, 1 Pass Cover, 2068 kPa	777	854	1070	1144
NIH, 2 Pass Cover, 2068 kPa	754	865	1075	1179
NIH, 3 Pass Cover, 2068 kPa	782	820	1067	1141
NIH/MWB End Cover, 2068 kPa	625	625	885	885

WATERBOX DESCRIPTION	CONDENSER			
	FRAME 7		FRAME 8	
	Standard Nozzles	Flanged	Standard Nozzles	Flanged
NIH, 1 Pass Cover, 1034 kPa	149	200	189	224
NIH, 2 Pass Cover, 1034 kPa	183	236	230	300
NIH, 3 Pass Cover, 1034 kPa	554	580	666	693
MWB End Cover, 1034 kPa	354	354	457	457
Bolt-on MWB End Cover, 1034 kPa	318	318	593	593
NIH/MWB Return Cover, 1034 kPa	143	143	183	183
NIH, 1 Pass Cover, 2068 kPa	767	840	901	976
NIH, 2 Pass Cover, 2068 kPa	738	845	859	1008
NIH, 3 Pass Cover, 2068 kPa	777	831	904	958
NIH/MWB End Cover, 2068 kPa	579	579	760	760

LEGEND

NIH — Nozzle-in-Head
MWB — Marine Waterbox

NOTE: Weight for NIH 2-pass cover, 1034 kPa, is included in the heat exchanger weights shown in Tables 18A and 18B.

Table 23 — Component Weights

COMPONENT	FRAME 2 COMPRESSOR*		FRAME 3 COMPRESSOR*		FRAME 4 COMPRESSOR*		FRAME 5 COMPRESSOR*		FRAME E COMPRESSOR*	
	lb	kg	lb	kg	lb	kg	lb	kg	lb	kg
Suction Elbow	116	53	185	84	239	108	407	185	645	293
Discharge Elbow	100	45	125	57	157	71	325	147	290	132
Control Panel†	34	15	34	15	34	15	34	15	34	15
Optional Cooler Inlet Isolation Valve	8	4	13	6	20	9	24	11	24	11
Optional Discharge Isolation Valve	26	12	46	21	74	34	108	49	93	42
Std Tier VFD — 380, 400, and 460-v (230, 335, 445 A)	650	295	650	295	—	—	—	—	—	—
Std Tier VFD — 380, 400, and 460-v (485, 550 A)	—	—	1035	469	1035	469	—	—	—	—
Std Tier VFD — 380, 400, and 460-v (605, 680 A)	—	—	1600	726	1600	726	—	—	—	—
Std Tier VFD — 380, 400, and 460-v (765 A)	—	—	—	—	1600	726	—	—	—	—
Std Tier VFD — 380, 400, and 460-v (855, 960, 1070 A)	—	—	—	—	1600	726	1600	726	1600	726
Std Tier VFD — 380, 400, and 460-v (1275 A)	—	—	—	—	3000	1361	3000	1361	3000	1361
Std Tier VFD — 380, 400, and 460-v (1530 A)	—	—	—	—	—	—	3000	1361	3000	1361
LiquiFlo™ 2 VFD — 380, 400, and 460-v (442 A)	1600	726	1600	726	—	—	—	—	—	—
LiquiFlo 2 VFD — 380, 400, and 460-v (608 A)	—	—	1600	726	1600	726	—	—	—	—
LiquiFlo 2 VFD — 380, 400, and 460-v (900 A)	—	—	—	—	2800	1270	2800	1270	2800	1270
LiquiFlo 2 VFD — 380, 400, and 460-v (1200 A)	—	—	—	—	2850	1293	2850	1293	2850	1293
LiquiFlo 2 VFD — 575-v (390 A)	2200	998	2200	998	—	—	—	—	—	—
VFD Shelf	—	—	—	—	1049	476	1049	476	1049	476

*To determine compressor frame size, refer to 19XR,XRV Computer Selection Program.
†Included in total cooler weight.

NOTE: VFD sizes are available on select heat exchanger models; consult the 19XR,XRV Computer Selection program.

Table 24 — Optional Pumpout Electrical Data

PUMPOUT UNIT	VOLTS-PH-Hz	MAX RLA	LRA
19XR04026501	208/230-3-60	15.8	105
19XR04026501	208/230-3-50	15.8	105
19XR04026502	460-3-60	7.8	52
19XR04026503	400-3-50	7.8	52

LEGEND
LRA — Locked Rotor Amps
RLA — Rated Load Amps

Table 25 — Motor Voltage Code

MOTOR VOLTAGE CODE		
Code	**Volts**	**Frequency**
60	200	60
61	230	60
62	380	60
63	416	60
64	460	60
65	575	60
66	2400	60
67	3300	60
68	4160	60
69	6900	60
6A	11000	60
6B	10000	60
6C	13800	60
50	230	50
51	346	50
52	400	50
53	3000	50
54	3300	50
55	6300	50
5A	10000	50
5B	11000	50

19XR,XRV COMPRESSOR FRAME 2 THROUGH FRAME 5 FITS AND CLEARANCES (in.)

ITEM	COMPRESSOR	FRAME 2	FRAME 3	FRAME 4		FRAME 5	
	Code	201-299, 2ZZ	321-389, 3ZZ	421-487, 4B1-4W7		501-599	
	DESCRIPTION	Oil Film Bearings	Rolling Element Bearings	Oil Film Bearings	Rolling Element Bearings	Oil Film Bearings	Rolling Element Bearings
A	Low Speed Journal-Gear End	.0050/.0040	.0050/.0040	.0055/.0043	.0055/.0043	.0069/.0059	.0069/.0059
B	Low Speed Journal-Motor End	.0050/.0040	.0050/.0040	.0053/.0043	.0053/.0043	.0065/.0055	.0065/.0055
C1	Low Speed Labyrinth to Thrust Disk	.0115/.0055	N/A	.010/.005	N/A	N/A	N/A
C2	Labyrinth to Low Speed Shaft	N/A	.010/.005	.0095/.0055	.0095/.0055	.013/.009	.013/.009
D	Low Speed Shaft Thrust Float	.020/.008	.020/.008	.023/.008	.023/.008	.020/.008	.020/.008
E	Impeller Eye to Shroud	*	*	*	*	*	*
F1	Impeller Bore to Shaft-Rear	–.0020/–.0005	–.0025/–.0010	–.0014/–.0029	–.0014/–.0029	–.0019/–.0005	–.0019/–.0005
F2	Impeller Bore to Shaft-Front	N/A	N/A	–.0005/–.0025	–.0005/–.0025	–.0014/.0000	N/A
G	Impeller Discharge to Shroud	*	*	*	*	*	*
H	Impeller Spacer to Shaft	.0025/.0010	.0025/.0010	.0025/.0010	.0025/.0010	.0024/.0010	.0024/.0010
I	Slinger to Shaft	.0013/.0005	.0012/.0004	.0012/.0004	.0012/.0004	.0012/.0004	.0012/.0004
J	Labyrinth to Slinger	.013/.009	.010/.006	.010/.006	.010/.006	.010/.006	.010/.006
K	Labyrinth to Impeller	.012/.008	.012/.008	.012/.008	.012/.008	.012/.008	.012/.008
L	High Speed Journal-Impeller End	.0047/.0037	N/A	.0040/.0028	N/A	.0048/.0038	N/A
M	Thrust Assembly Seal Ring Axial Clearance	.006/.002	N/A	.006/.002	N/A	.006/.002	N/A
N	Thrust Assembly Seal Ring to Shaft	.0045/.0015	N/A	.0045/.0015	N/A	.0045/.0015	N/A
O	High Speed Shaft Thrust Float	.014/.008	0 Float	.014/.008	Float	.014/.008	0 Float
P	High Speed Journal-Gear End	.0050/.0040	N/A	.0048/.0038	N/A	.0062/.0052	N/A

*Depends on impeller size, contact your Carrier Service Representative for more information.

NOTES:
1. All clearances for cylindrical surfaces are diametrical.
2. Dimensions shown are with rotors in the thrust position.
3. Frame 3 rolling element style high speed shaft and bearing assembly cannot be pulled from impeller end. The transmission assembly must be removed from the compressor casting (after the impeller is removed) and the bearing temperature sensor must be removed from the high speed shaft and bearing assembly before the high speed shaft and bearing assembly can be separated from the transmission.
4. If any components within a rolling element high speed shaft and bearing assembly are damaged it is recommended that the entire high speed shaft and bearing assembly be replaced.
5. Impeller spacing should be performed in accordance with the most recent Carrier Impeller Spacing Service Bulletin.

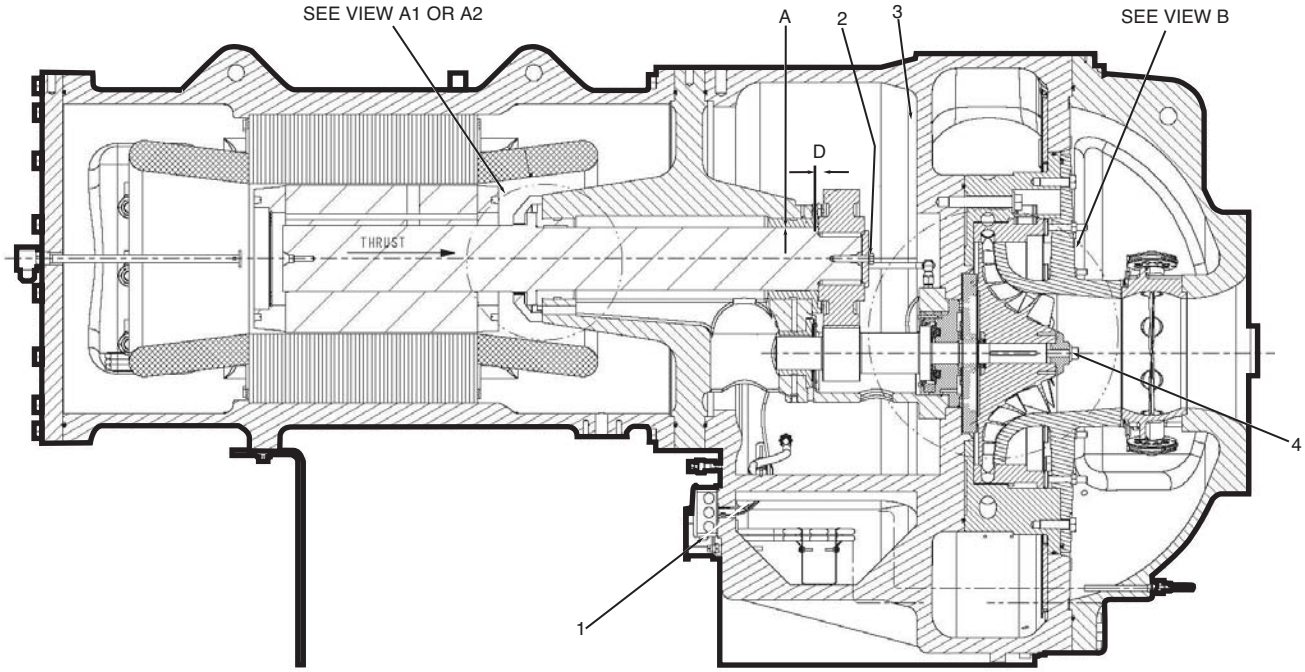

LEGEND

1 — Oil Heater Retaining Nut (Not Shown)
2 — Bull Gear Retaining Bolt
3 — Demister Bolts (Not Shown)
4 — Impeller Bolt

COMPRESSOR, TRANSMISSION AREA (FRAME 5 COMPRESSOR SHOWN)

Fig. 58 — Compressor Fits and Clearances — Single-Stage Compressors

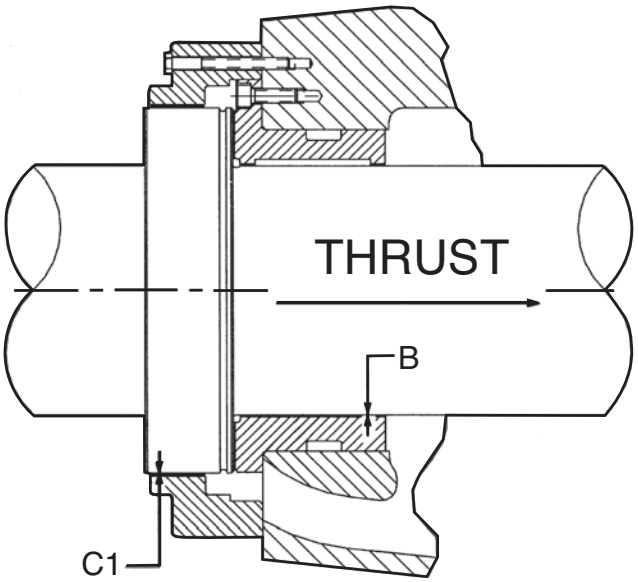

VIEW A1
LOW SPEED SHAFT THRUST DISK
FRAME 2 COMPRESSORS

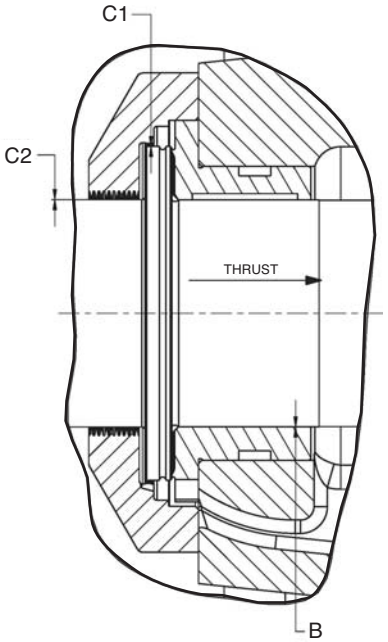

VIEW A2
LOW SPEED SHAFT THRUST DISK
FRAME 3, 4, AND 5 COMPRESSORS

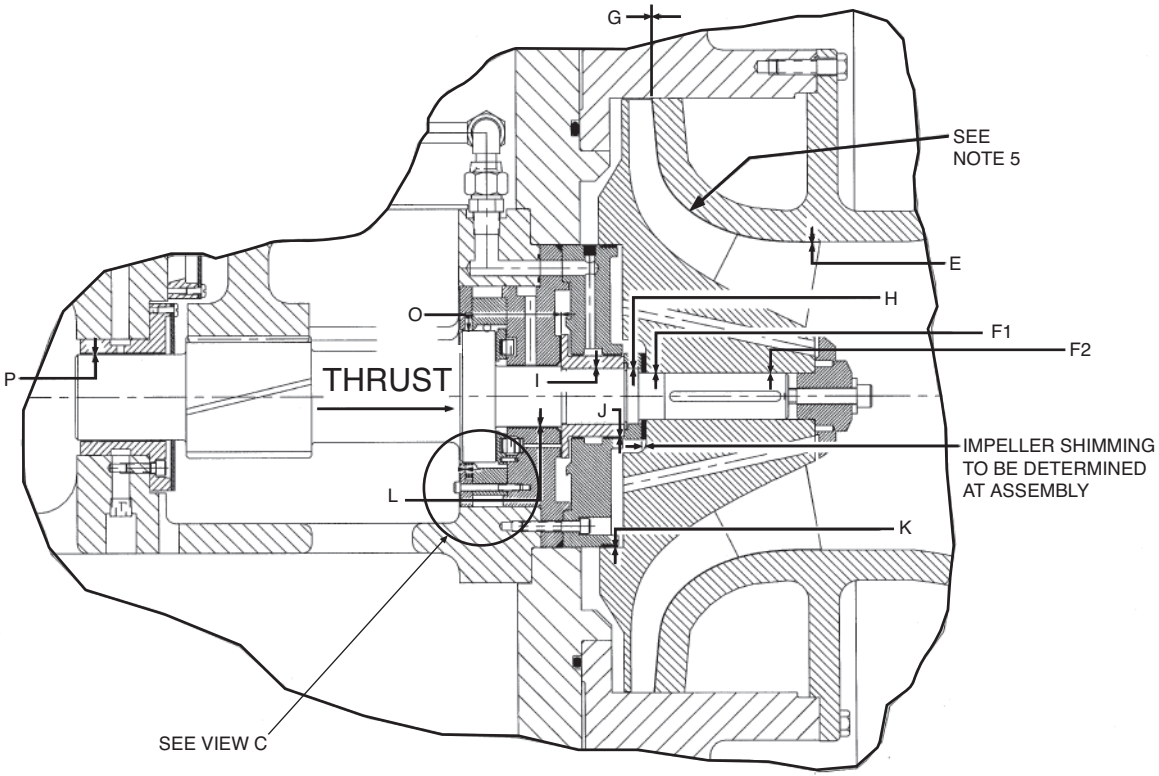

VIEW B — HIGH SPEED SHAFT, ORIGINAL DESIGN (OIL FILM BEARINGS) AND IMPELLER SECTION

Fig. 58 — Compressor Fits and Clearances — Single-Stage Compressors (cont)

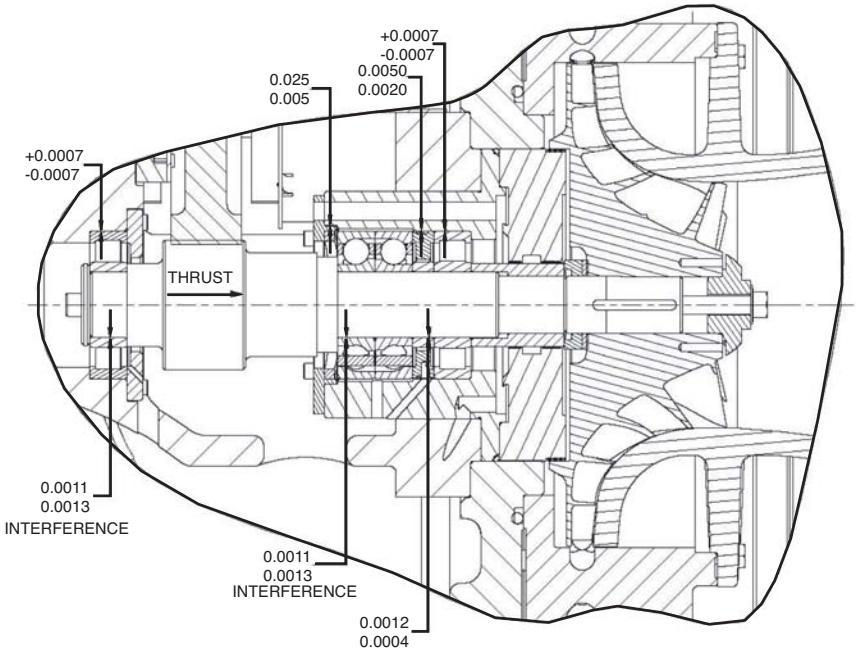

VIEW B — HIGH SPEED SHAFT WITH ROLLING ELEMENT BEARINGS

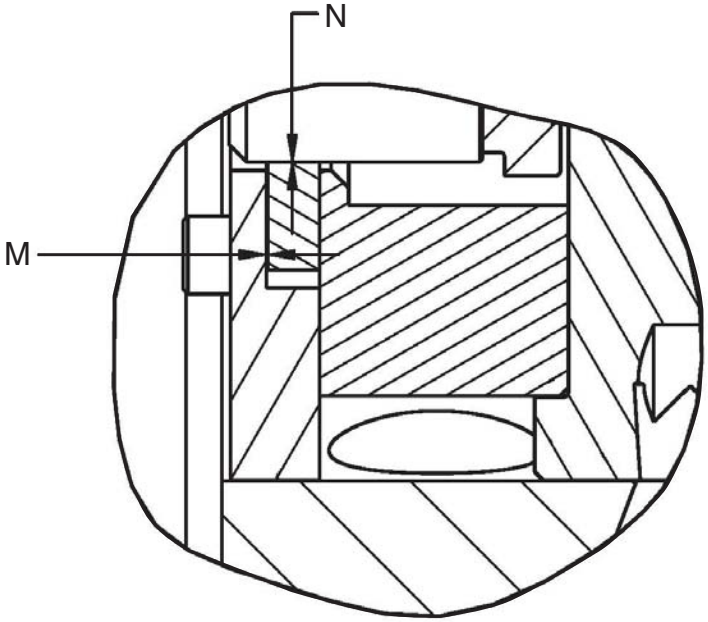

VIEW C — HIGH SPEED SHAFT RING SEAL

Fig. 58 — Compressor Fits and Clearances — Single-Stage Compressors (cont)

19XR,XRV COMPRESSOR FRAME E FITS AND CLEARANCES

ITEM	COMPRESSOR	FRAME E
	Code	E31-E69
	DESCRIPTION	Rolliing Element Bearings
A	Low Speed Journal - Gear End	.0069/.0059
B	Low Speed Journal - Motor End	.0065/.0059
C1	Low Speed labyrinth to thrust Disk	N/A
C2	Labyrinth to Low Speed Shaft	.013/.009
D	Low Speed Shaft thrust Float	.20/.008

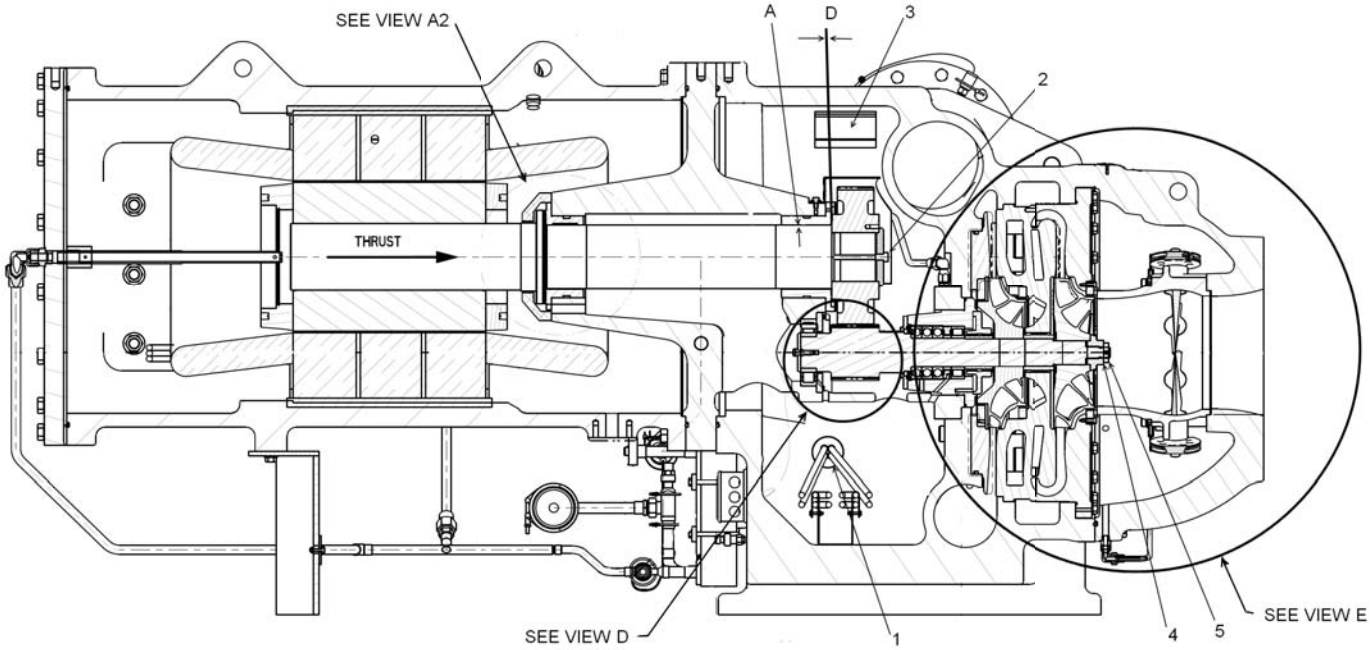

LEGEND

1 — Oil Heater Retaining Nut
2 — Bull Gear Retaining Bolt
3 — Demister Bolts
4 — First Impeller Nut (Inner)
5 — Second Impeller Nut (Outer)
6 — Guide Vane Shaft Seal (Not Shown)

Fig. 59 — Compressor Fits and Clearances — Two-Stage Compressors

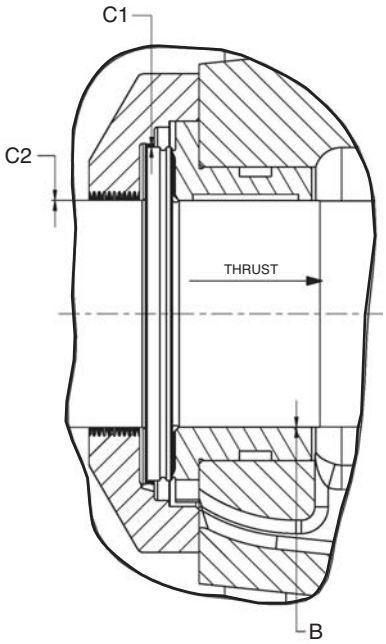

VIEW A2
LOW SPEED SHAFT THRUST DISK

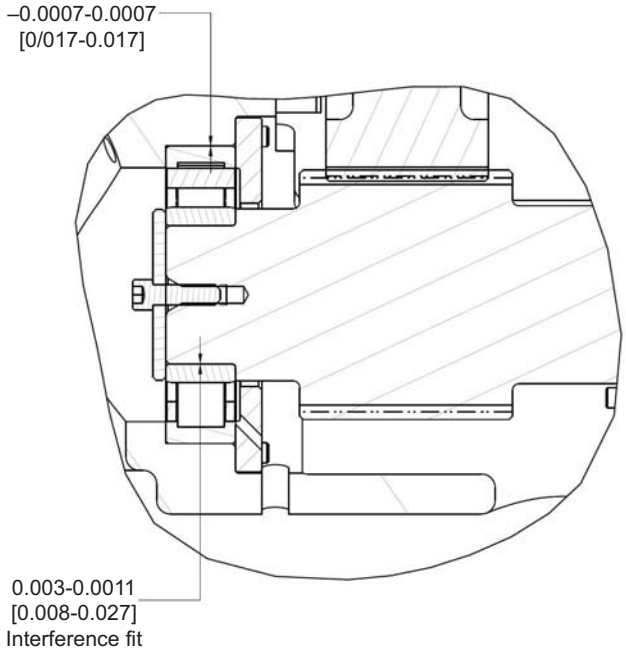

VIEW D
REAR, HIGH SPEED SHAFT BEARING

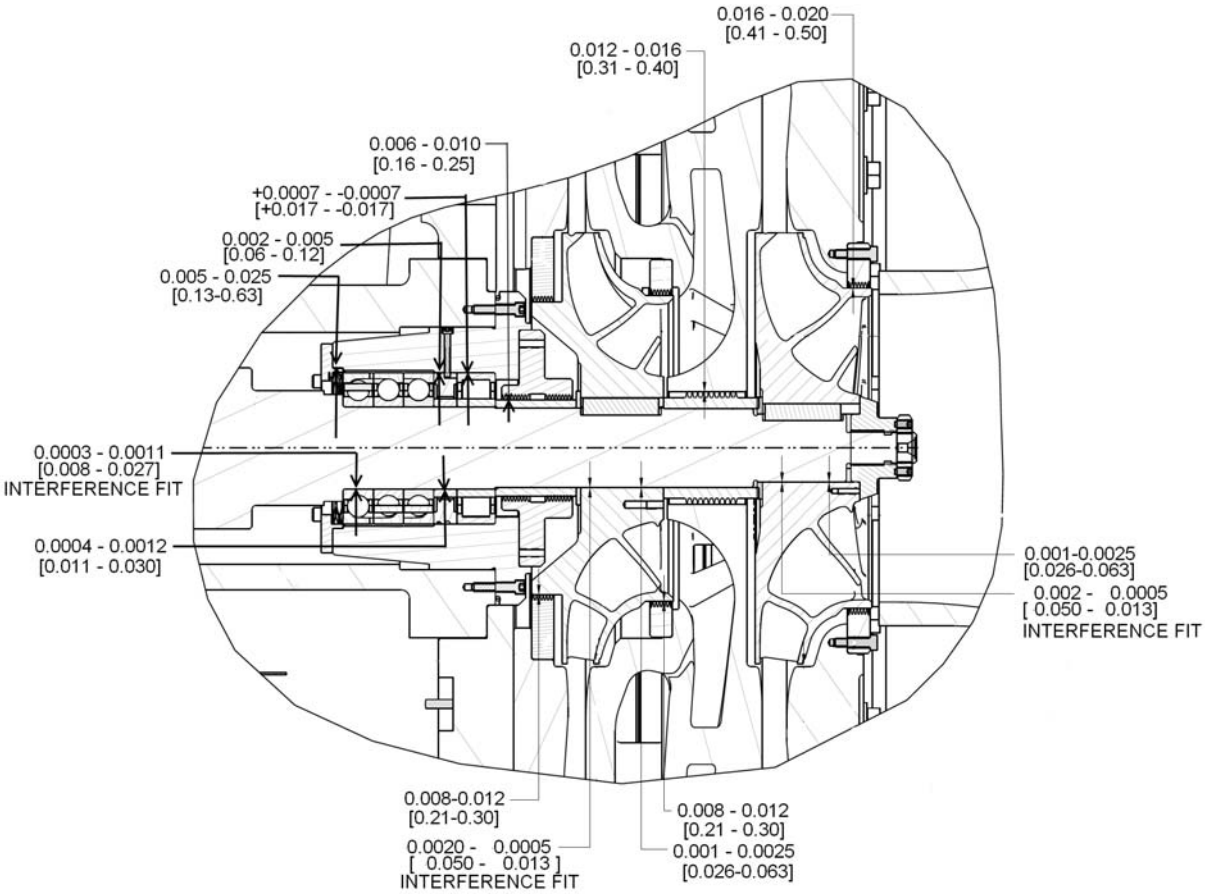

VIEW E

Fig. 59 — Compressor Fits and Clearances — Two-Stage Compressors (cont)

⚠ CAUTION

USE COPPER CONDUCTORS ONLY
UTILISEZ DES CONDUCTEURS EN CUIVRE SEULMENT

ALWAYS USE 2 WRENCHES TO TIGHTEN
- **TERM INSULATOR TO MOTOR – 15-35 ft. lb.**
- **BRASS NUT TO TERM INSULATOR – 3 ft. lb. max**
- **ADAPTOR TO TERM STUD – 20-35 ft. lb.**
- **LUG BOLTS (1/2")– 32-45 ft. lb.**

Insulate entire connection with electrical insulation including 1 inch of cable insulation and 1 inch of the term insulator.

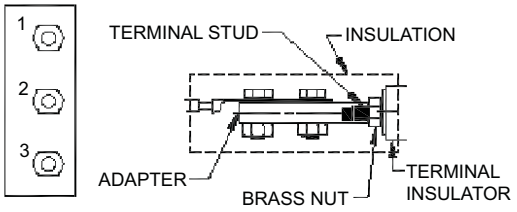

13

⚠ CAUTION

USE COPPER CONDUCTORS ONLY
UTILISEZ DES CONDUCTEURS EN CUIVRE SEULMENT

ALWAYS USE 2 WRENCHES TO TIGHTEN
- **TERM INSULATOR TO MOTOR – 15-35 ft. lb.**
- **CABLE LUG NUT – 40-45 ft. lb.**

Insulate entire connection with electrical insulation including 1 inch of cable insulation and 1 inch of the term insulator.

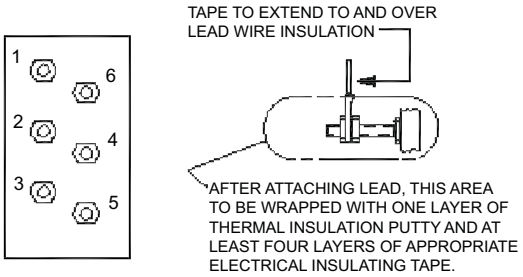

12

MOTOR LEAD INSTALLATION LABELS

19XR,XRV COMPRESSOR ASSEMBLY TORQUES FRAME 2-5

ITEM	COMPRESSOR	FRAME 2	FRAME 3	FRAME 4	FRAME 5
	Code	**201-299, 2ZZ**	**321-389, 3ZZ**	**421-487, 4B1-4W7**	**501-599**
1	Oil Heater Retaining Nut — ft-lb (N·m)	N/A	18-22 (25-30)	18-22 (25-30)	18-22 (25-30)
2	Bull Gear Retaining Bolt — ft-lb (N·m)	80-90 (108-122)	80-90 (108-122)	80-90 (108-122)	80-90 (108-122)
3	Demister Bolts — ft-lb (N·m)	15-19 (20-26)	15-19 (20-26)	15-19 (20-26)	15-19 (20-26)
4	Impeller bolt Torque — ft-lb (N·m)	32-48 (43-65)	55-60 (75-81)	55-60 (75-81)	160-225 (217-305)
5*	Guide Vane Shaft Seal Nut — ft-lb (N·m)	25 (34)	25 (34)	25 (34)	25 (34)

* Not shown.

19XR,XRV COMPRESSOR ASSEMBLY TORQUES FRAME E

ITEM	COMPRESSOR	FRAME 2
	Code	**E31-E69**
1	Oil Heater Retaining Nut — ft-lb (N·m)	18-22 (24-30)
2	Bull Gear Retaining Bolt — ft-lb (N·m)	80-90 (108-122)
3	Demister Bolts — ft-lb (N·m)	15-19 (20-26)
4	Impeller Nut (Inner) — ft-lb (N·m)	250 (339)
5	Impeller Nut (Outer) — ft-lb (N·m)	100 (136)
6*	Guide Vane Shaft Seal Nut — ft-lb (N·m)	25 (34)

Fig. 60 — Compressor Assembly Torques — Single and Two-Stage Compressors

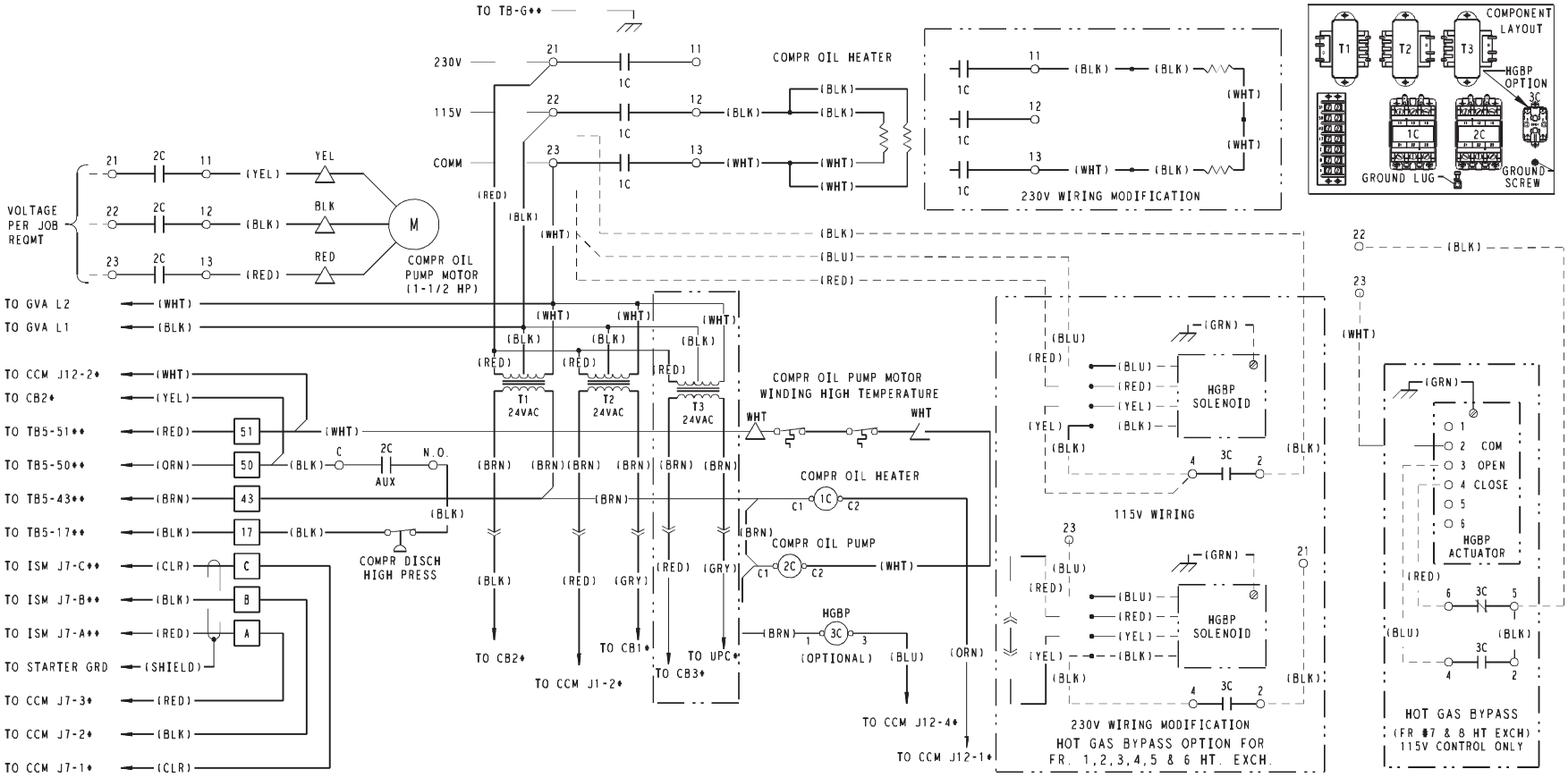

LEGEND

AUX	— Auxiliary	**FR**	— Frame	**L**	— Main Supply Power	△	Denotes Oil Pump Terminal
C	— Contactor	**G**	— Ground	**N.O.**	— Normally Open	□	Denotes Power Panel Terminal
CB	— Circuit Breaker	**GRD**	— Ground	**PRESS**	— Pressure	*	Denotes Mach. Control Panel Conn.
CCM	— Chiller Control Module	**GVA**	— Guide Vane Actuator	**REQM'T**	— Requirement	**	Denotes Motor Starter Panel Conn.
COMM	— Communication	**HGBP**	— Hot Gas Bypass	**T**	— Transformer	○	Denotes Component Terminal
COMPR	— Compressor	**HT EXCH**	— Heat Exchanger	**TB**	— Terminal Board	●	Wire Splice
DISCH	— Discharge	**ISM**	— Integrated Starter Module			—>>	Denotes Conductor Male/Female Conne
						- - -	Option Wiring

Fig. 61 — Power Panel Wiring Schematic

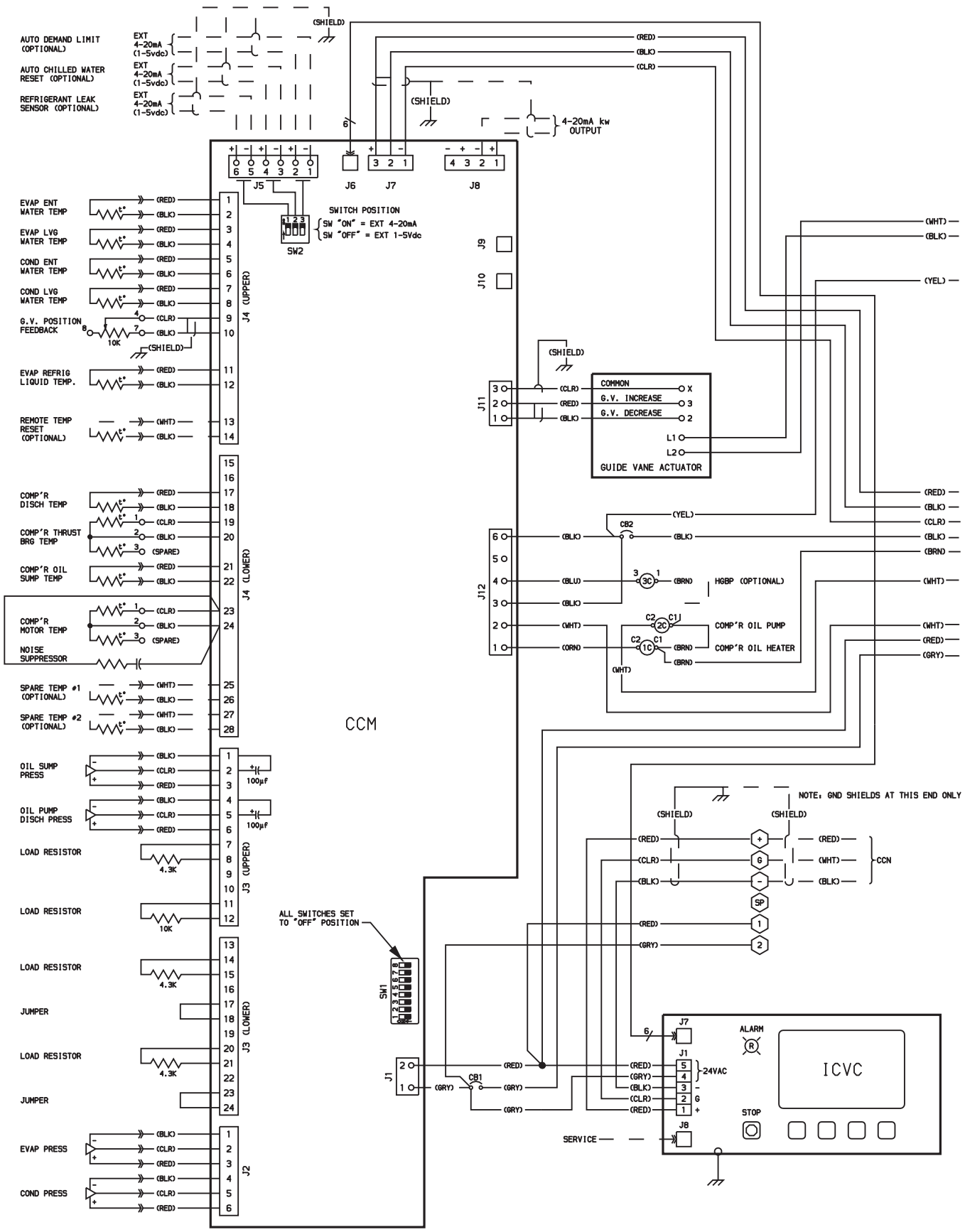

Fig. 62 — PIC II Control Panel Wiring Schematic (Frame 2, 3, 4 and E Compressors without Split Ring Diffuser)

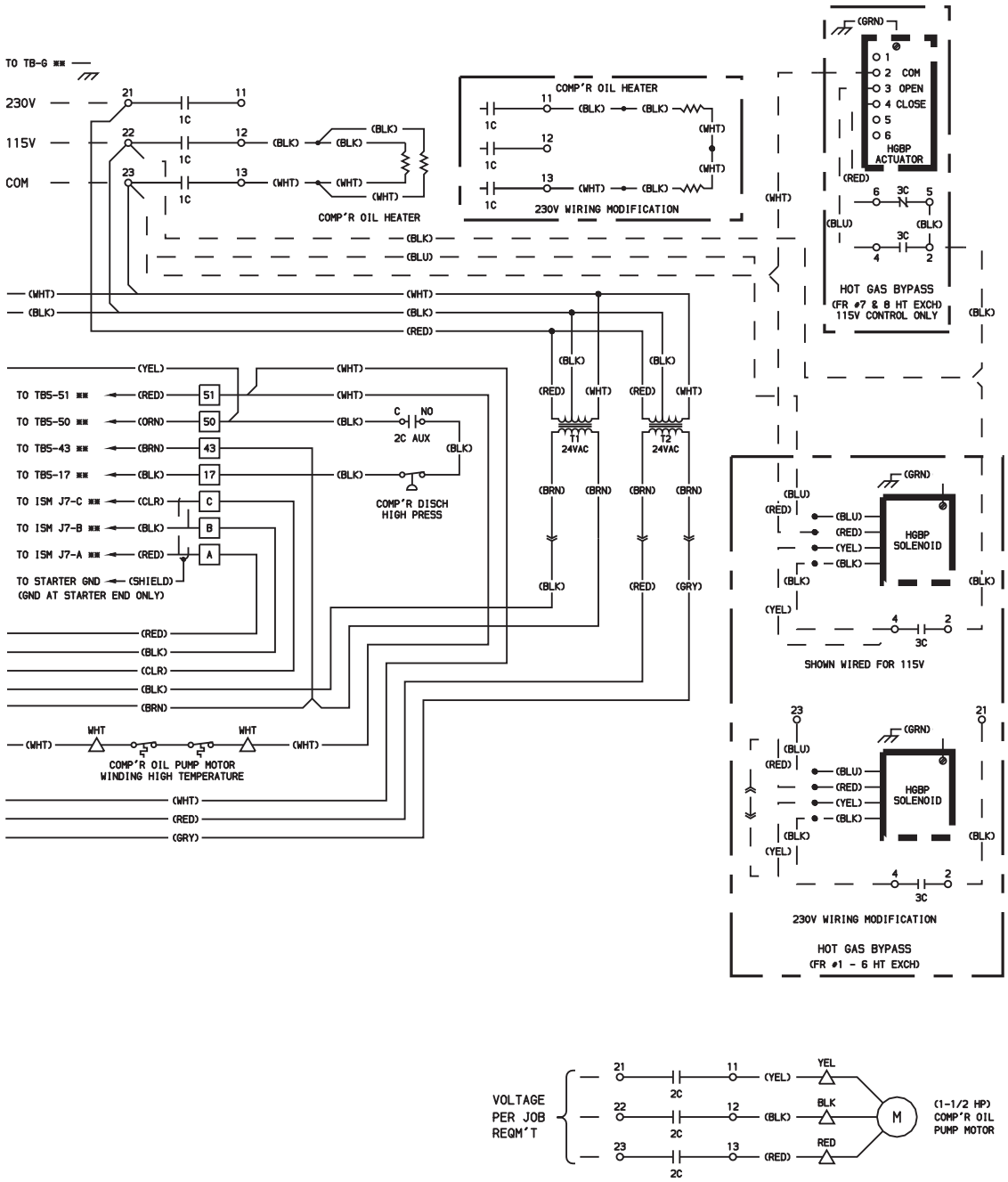

Fig. 62 — PIC II Control Panel Wiring Schematic (Frame 2, 3, 4 and E Compressors without Split Ring Diffuser) (cont)

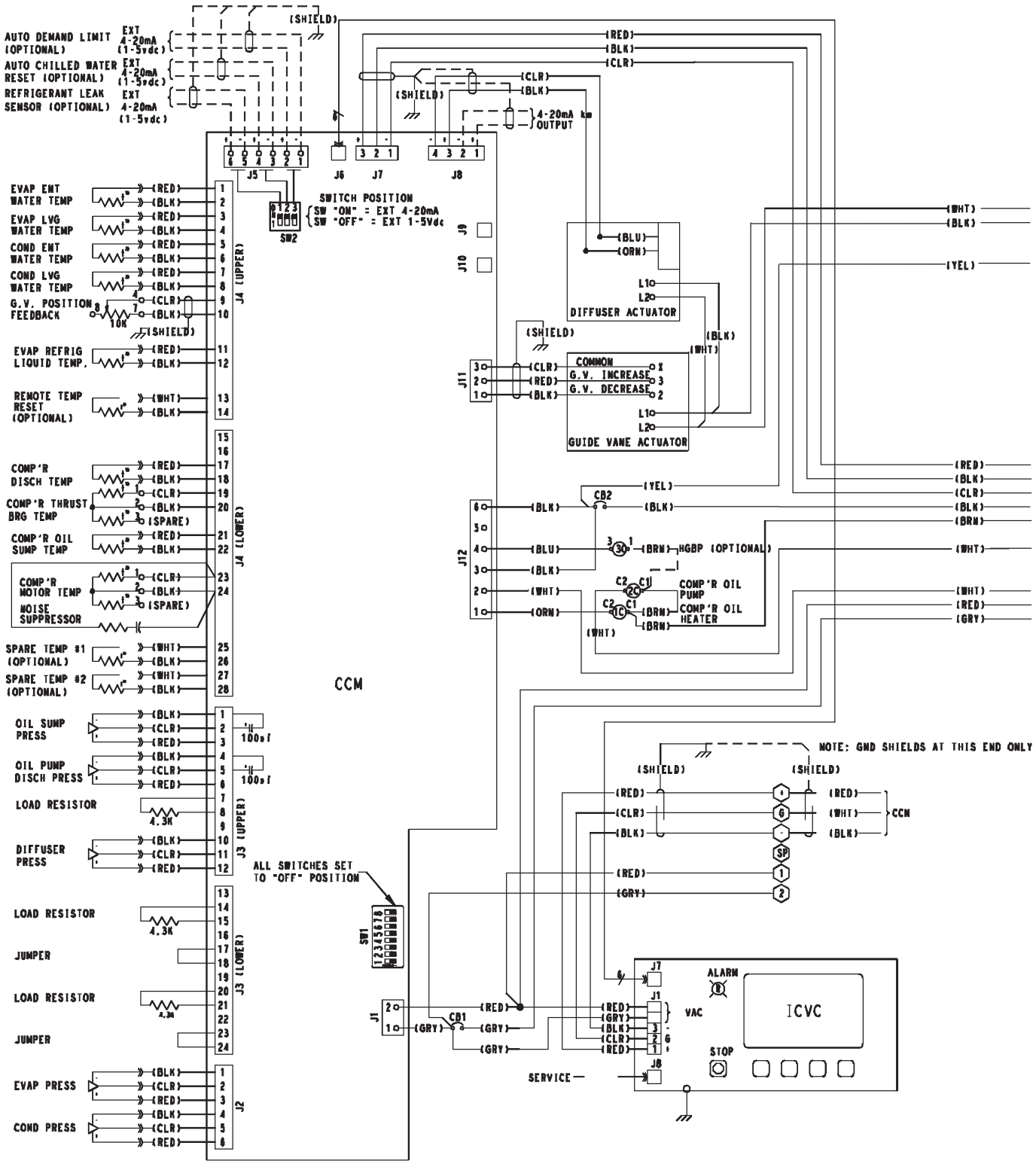

Fig. 63 — PIC II Control Panel Wiring Schematic (Frame 4 and 5 Compressors with Split Ring Diffuser)

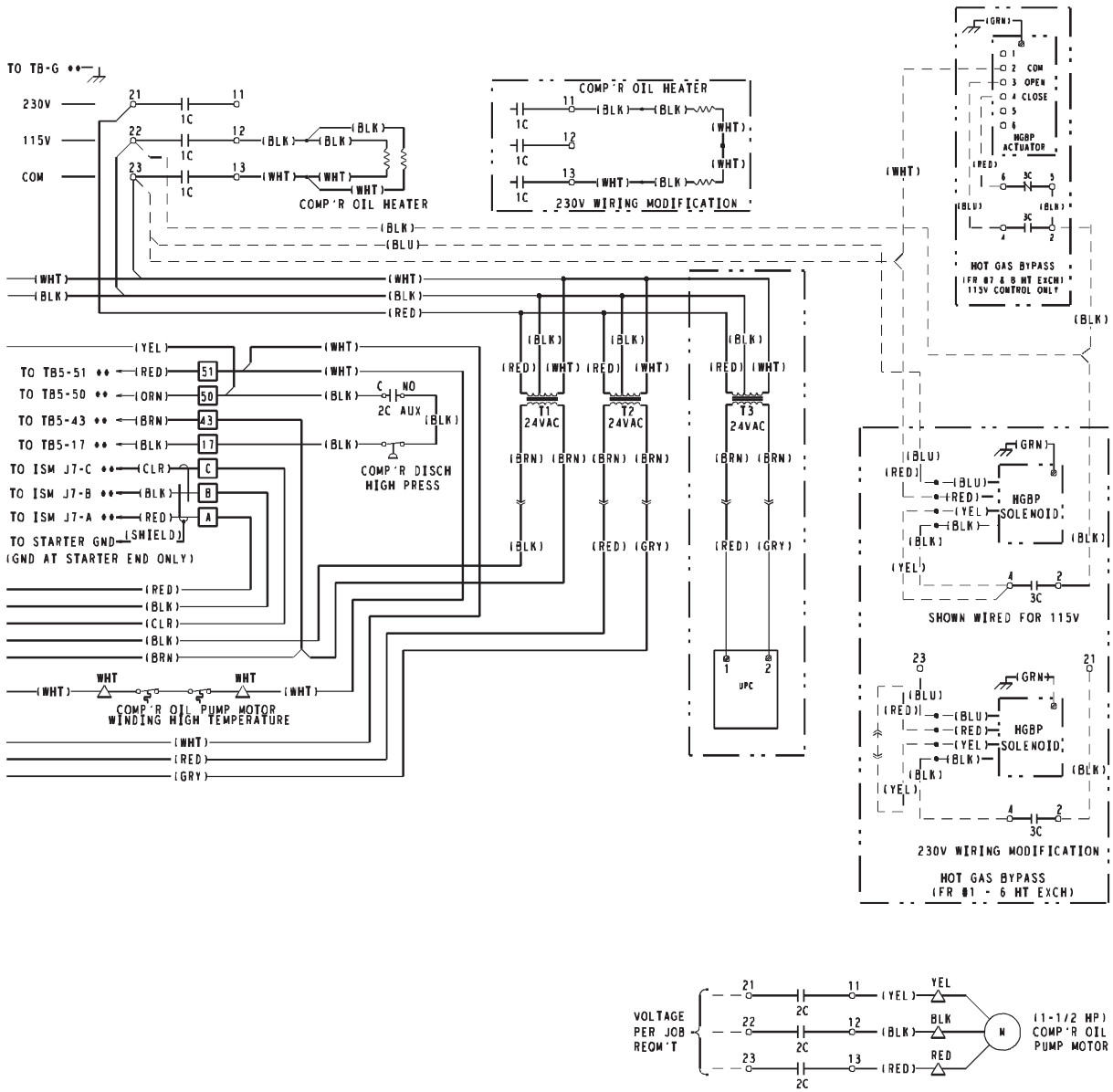

LEGEND

AUX	— Auxiliary	**LVG**	— Leaving
BRG	— Bearing	**N.O.**	— Normally Open
C	— Contactor	**PRESS**	— Pressure
CB	— Circuit Breaker	**REQM'T**	— Requirement
CCM	— Chiller Control Module	**TEMP**	— Temperature
CCN	— Carrier Comfort Network	**TB**	— Terminal Board
COMP'R	— Compressor	**UPC**	— UPC Open Controller
COND	— Condenser	⬡	Denotes Control Panel Terminal
DISCH	— Discharge	△	Denotes Oil Pump Terminal
DL/DP	— Datalink or Dataport	□	Denotes Power Panel Terminal
ENT	— Entering	**	Denotes Motor Starter Panel Conn.
EVAP	— Evaporator	○	Denotes Component Terminal
EXT	— External	●	Wire Splice
FR	— Frame	—><	Denotes Conductor Male/Female Connector
GND	— Ground	▬▬	Option Wiring
G.V.	— Guide Vane		
HGBP	— Hot Gas Bypass		
HT EXCH	— Heat Exchanger		
ICVC	— International Chiller Visual Controller		
ISM	— Integrated Starter Module		
L	— Main Supply Power		

Fig. 63 — PIC II Control Panel Wiring Schematic (Frame 4 and 5 Compressors with Split Ring Diffuser) (cont)

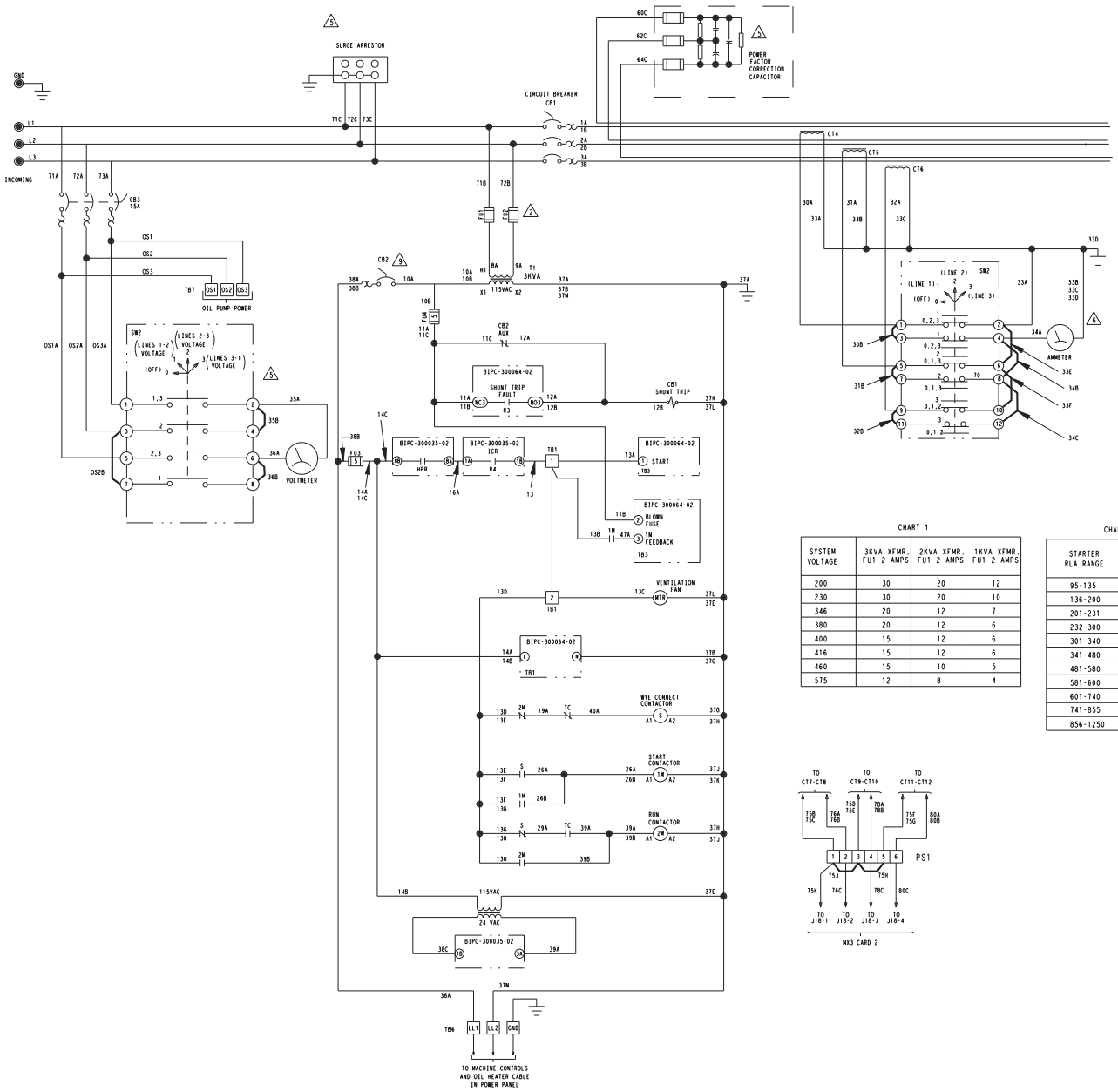

CHART 1

SYSTEM VOLTAGE	3KVA XFMR. FU1-2 AMPS	2KVA XFMR. FU1-2 AMPS	1KVA XFMR. FU1-2 AMPS
200	30	20	12
230	30	20	10
346	20	12	7
380	20	12	6
400	15	12	6
416	15	12	6
460	15	10	5
575	12	8	4

CHART 2

STARTER RLA RANGE	MX3 CT RATIO
95-135	864:1
136-200	2640:1
201-231	2640:1
232-300	2640:1
301-340	2640:1
341-480	3900:1
481-580	3900:1
581-600	3900:1
601-740	3900:1
741-855	5760:1
856-1250	5760:1

Fig. 64 — Benshaw, Inc. Wye-Delta Unit Mounted Starter Wiring Schematic (Low Voltage)

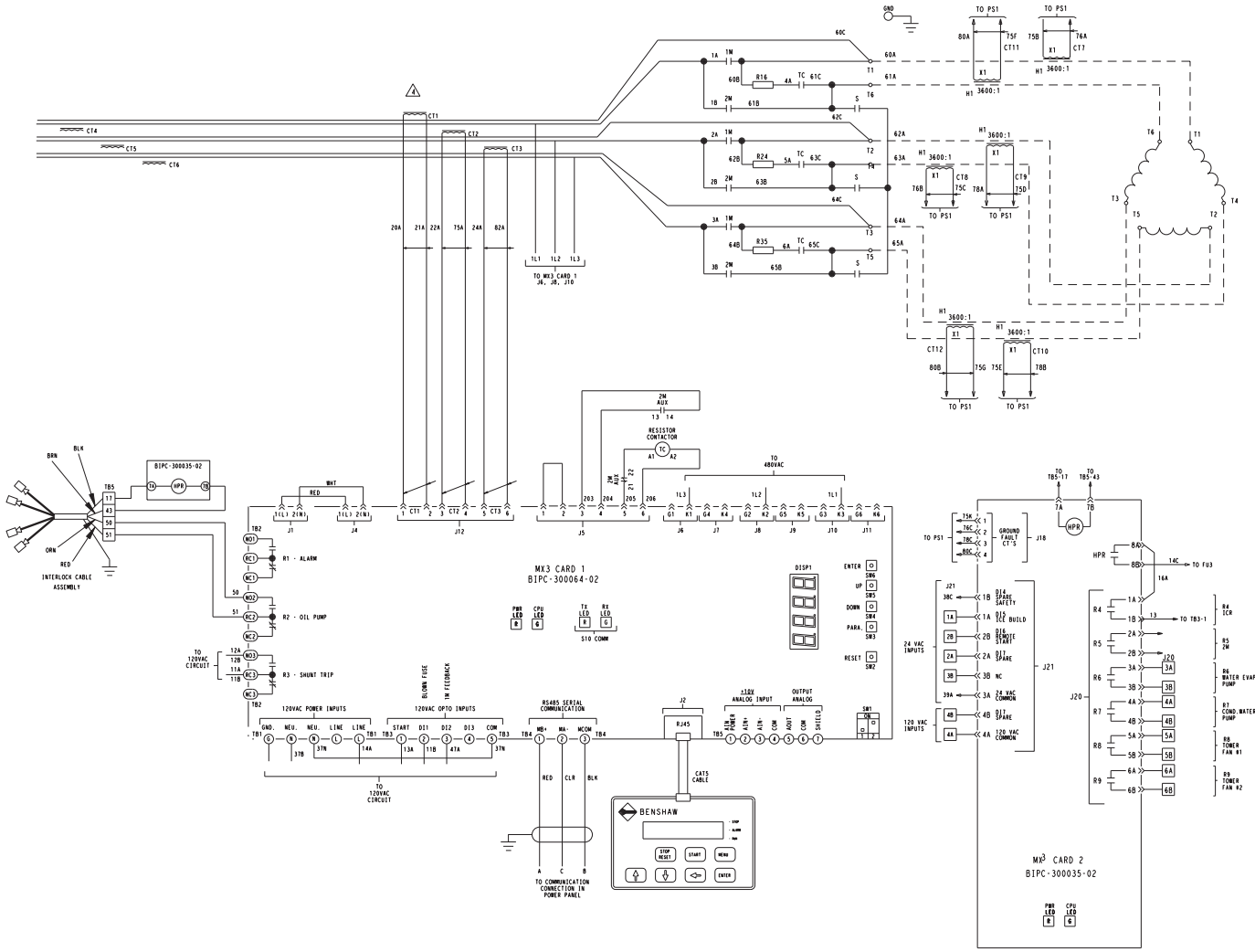

LEGEND

AUX	— Auxiliary	**HPR**	— High Pressure Relay		Wire Node Symbol may have terminal block		PC Board Terminals
BR	— Bridge Rectifier	**L**	— Main Supply Power		Benshaw supplied terminal block		Twisted Pair
CB	— Circuit Breaker	**LL**	— Control Power Supply		Terminal Strip		Twisted Shielded Pair
CR	— Control Relay	**M**	— Contactor		Power Connection		Shield Wire
COND	— Condenser	**O/L**	— Overload Reset				Field Wiring
CPU	— Central Processing Unit	**PFCC**	— Power Factor Correction Capacitor				
CVC/ ICVC	— Chiller Visual Controller	**RLA**	— Rated Load Amps				
CT	— Current Transformer	**SCR**	— Silicone Controller Rectifier				
EVAP	— Evaporator	**ST**	— Shunt Trip				
FU	— Fuse	**TB**	— Terminal Block				
GND	— Ground						

NOTES:

1. LED status with power applied and prior to run command. ● "ON" ○ "OFF"
2. Transformer T1 primary fuses FU1/FU2 value dependent on system voltage and model, per Chart 1. Transformer connections per transformer nameplate connection diagram.
3. MOVs are used on power stack assemblies for system voltages of 200 through 460 vac (as shown). Resistor/capacitor networks (DVDTs) are used on power stack assemblies in place of MOVs for a system voltage of 575 vac (not shown).
4. K3 relay shown in deenergized state. K3 contact will close when power is supplied. K3 contact will open on stop command or system fault.
5. CT1-CT3 are sized per Chart 2.
6. Optional.

Fig. 64 — Benshaw, Inc. Wye-Delta Unit Mounted Starter Wiring Schematic (Low Voltage) (cont)

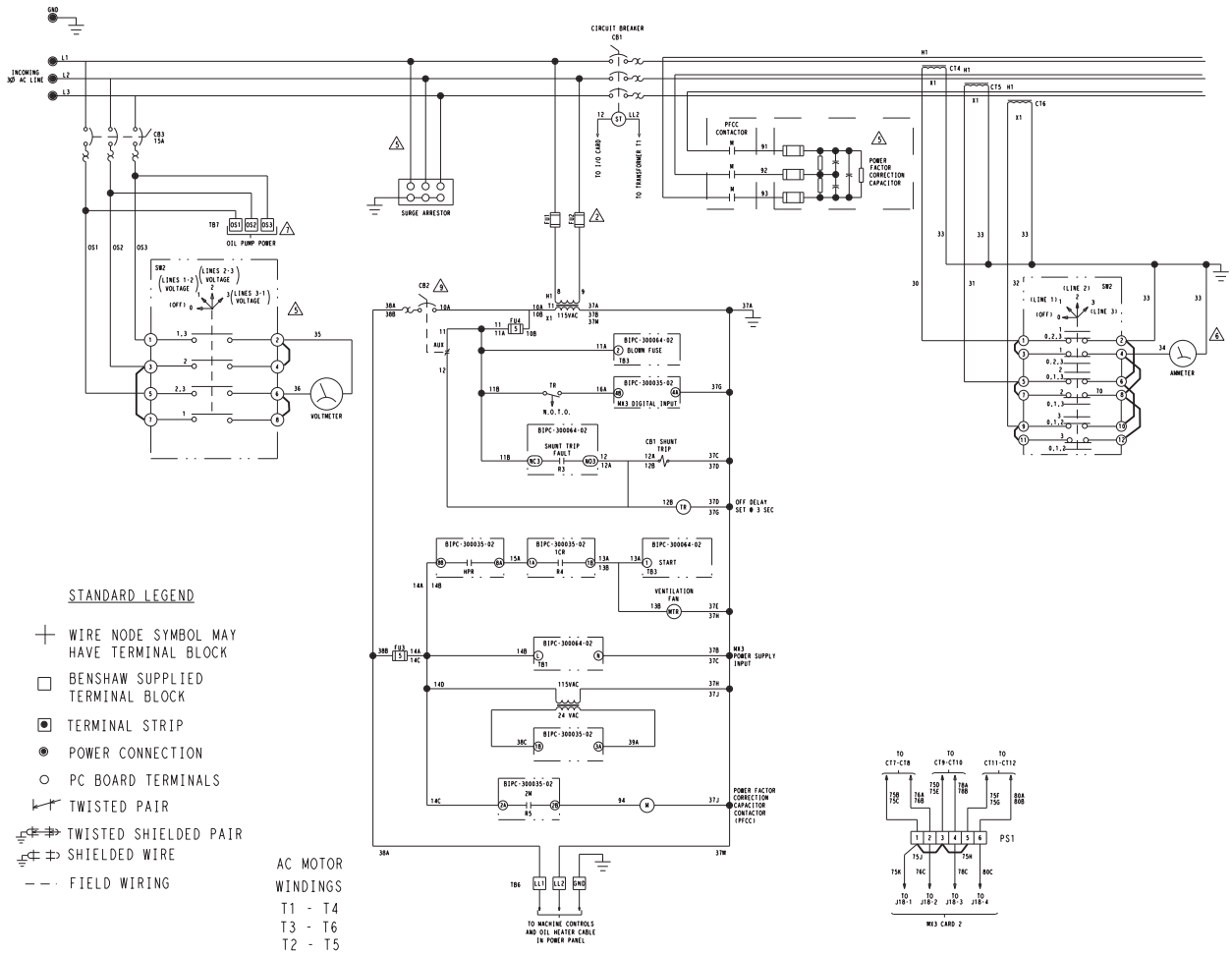

NOTES:

1. LED status with power applied and prior to RUN command.
   - "ON"
   - "OFF "
2. Transformer T1 primary fuses FU1/FU2 value dependent on system voltage and model, per Chart 1. Transformer connections per transformer nameplate connection diagram.
3. CT1-CT3 are sized per Chart 2.
4.
5. Optional for all starters.
6.
7.
8. CT7-CTI2 are optional for all starters.
9. Circuit breaker CB2 rated at 30 amps for models 19XRA, 19XRC, 19XTR.

Fig. 65 — Benshaw, Inc. Solid-State Unit Mounted Starter Wiring Schematic

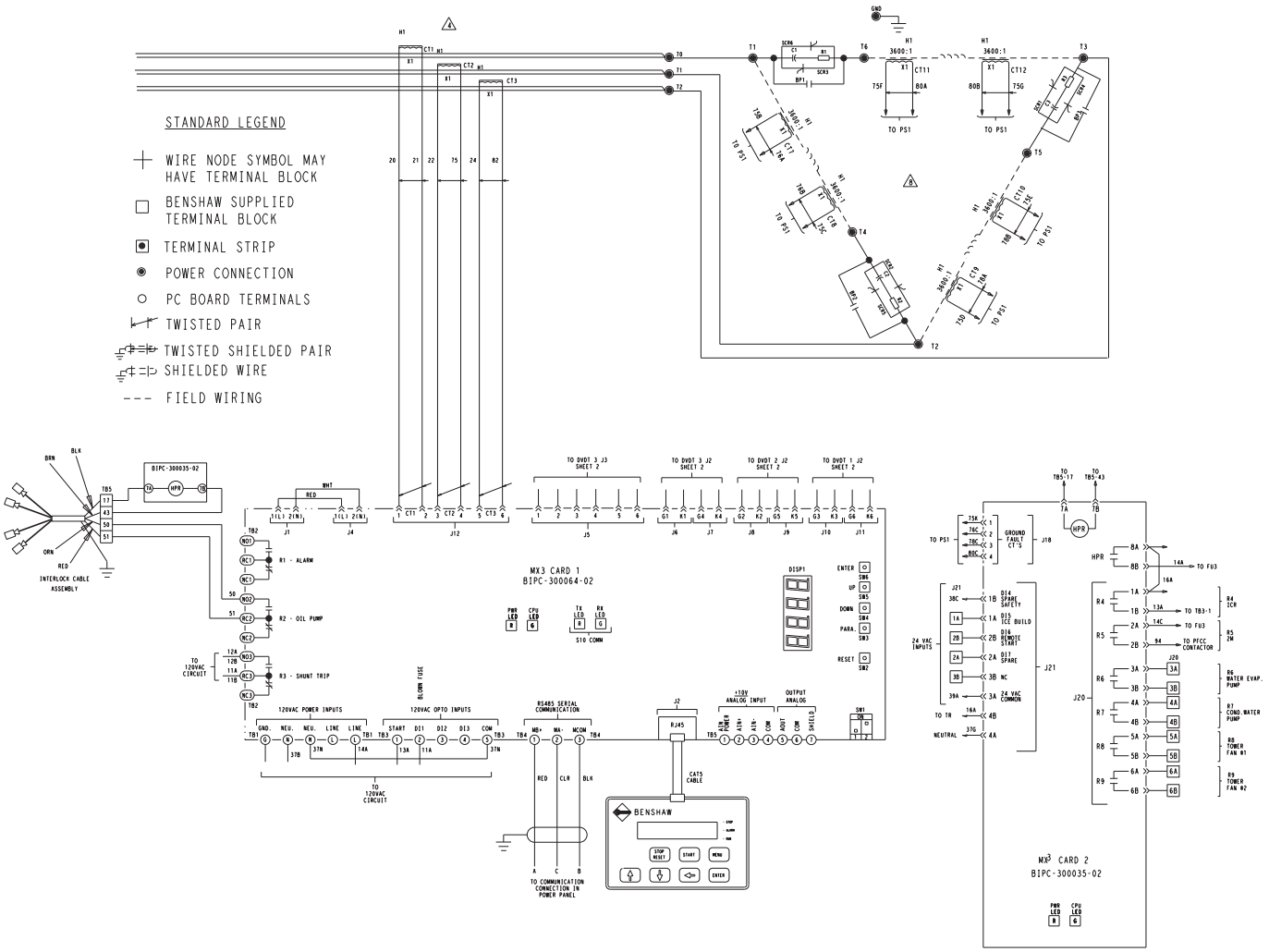

CHART 1

SYSTEM VOLTAGE	3 KVA XFMR FU1-2 AMPS	2 KVA XFMR FU1-2 AMPS	1 KVA XFMR FU1-2 AMPS
200	30	20	12
230	30	20	10
346	20	12	7
380	20	12	6
400	15	12	6
415	15	12	6
480	15	10	5
575	12	8	4

CHART 2

STARTER RLA RANGE	MX3 CT RATIO
95-135	864:1
136-200	2640:1
201-231	2640:1
232-300	2640:1
301-340	2640:1
341-480	3900:1
481-580	3900:1
581-600	3900:1
601-740	3900:1
741-855	5760:1
856-1250	5760:1

CHART 3

STARTER RLA RANGE	L1, L2, L3 CONDUCTORS PER PHASE (Load Side)
95-205	262 MCM DLO BLK 1 cond per phase
206-259	373 MCM DLO BLK 1 cond per phase
260-298	373 MCM DLO BLK 1 cond per phase
299-398	262 MCM DLO BLK 2 cond per phase
399-501	262 MCM DLO BLK 2 cond per phase
502-597	373 MCM DLO BLK 2 cond per phase
598-687	373 MCM DLO BLK 2 cond per phase
688-791	444 MCM DLO BLK 2 cond per phase
792-854	444 MCM DLO BLK 2 cond per phase
855-979	373 MCM DLO BLK 3 cond per phase
980-1194	444 MCM DLO BLK 3 cond per phase
1195-1390	444 MCM DLO BLK 3 cond per phase

Fig. 65 — Benshaw, Inc. Solid-State Unit Mounted Starter Wiring Schematic (cont)

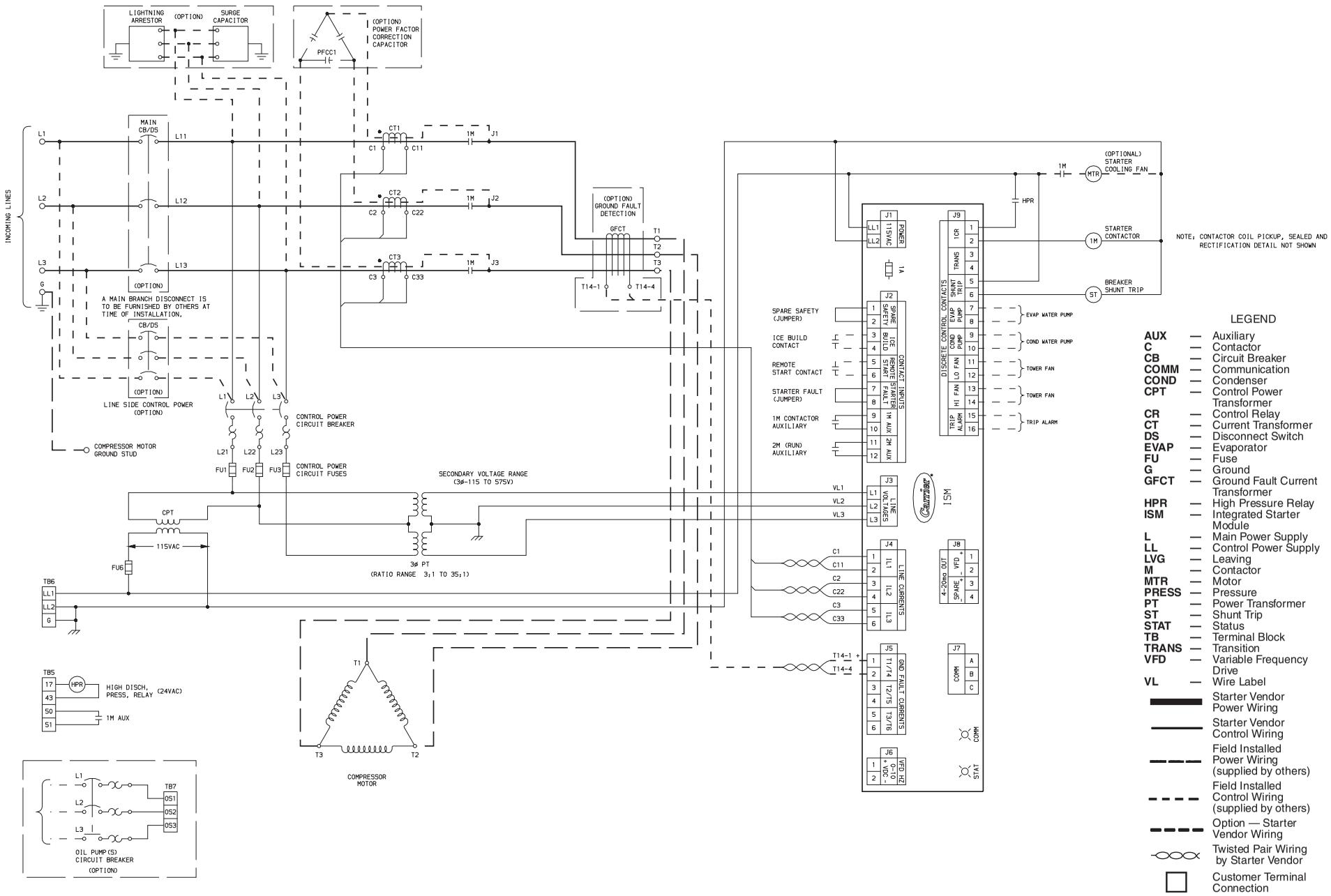

Fig. 66 — Typical Across-the-Line Starter Wiring Schematic (Medium Voltage)

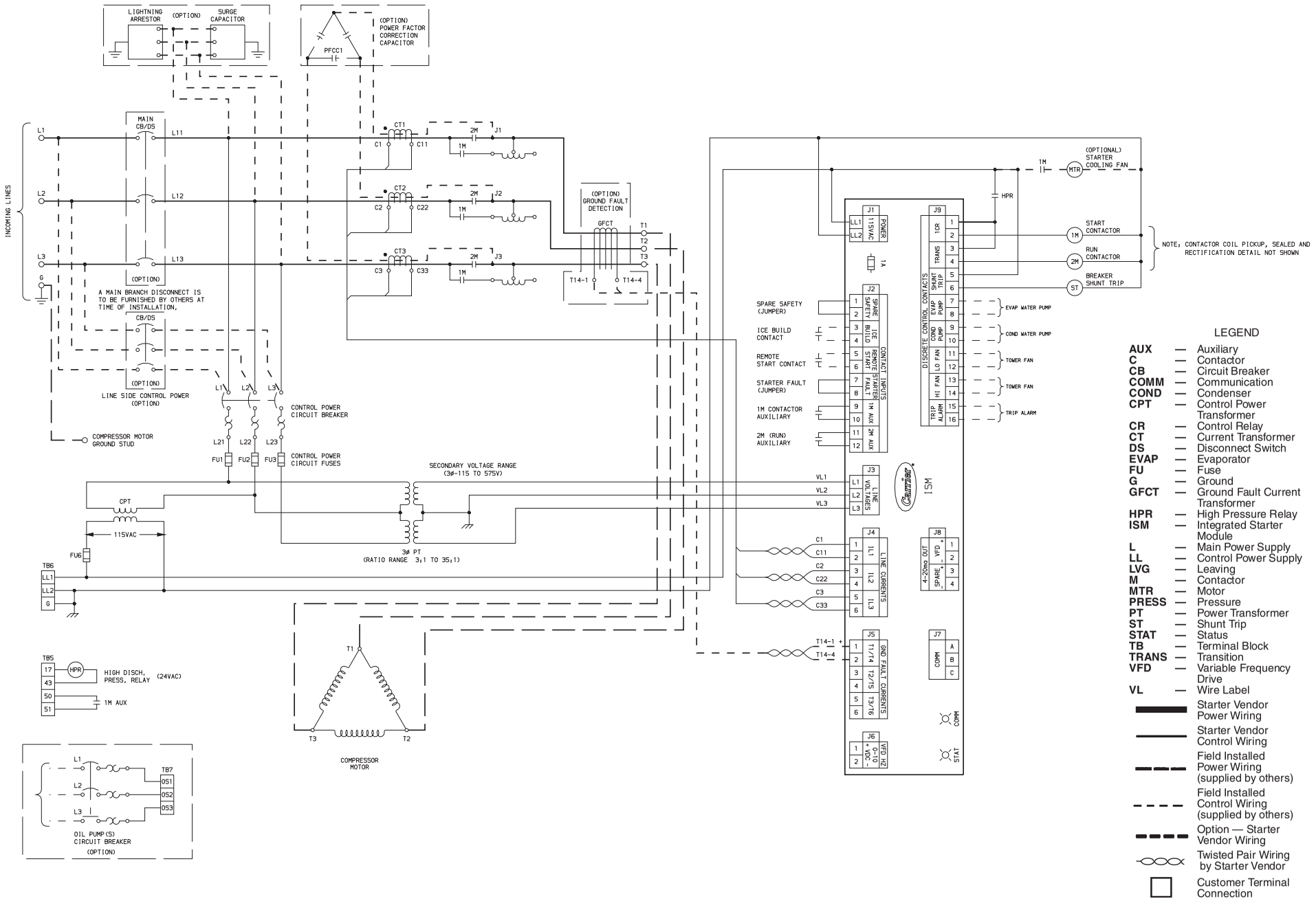

Fig. 67 — Typical Primary Reactor Starter Wiring Schematic (Medium Voltage)

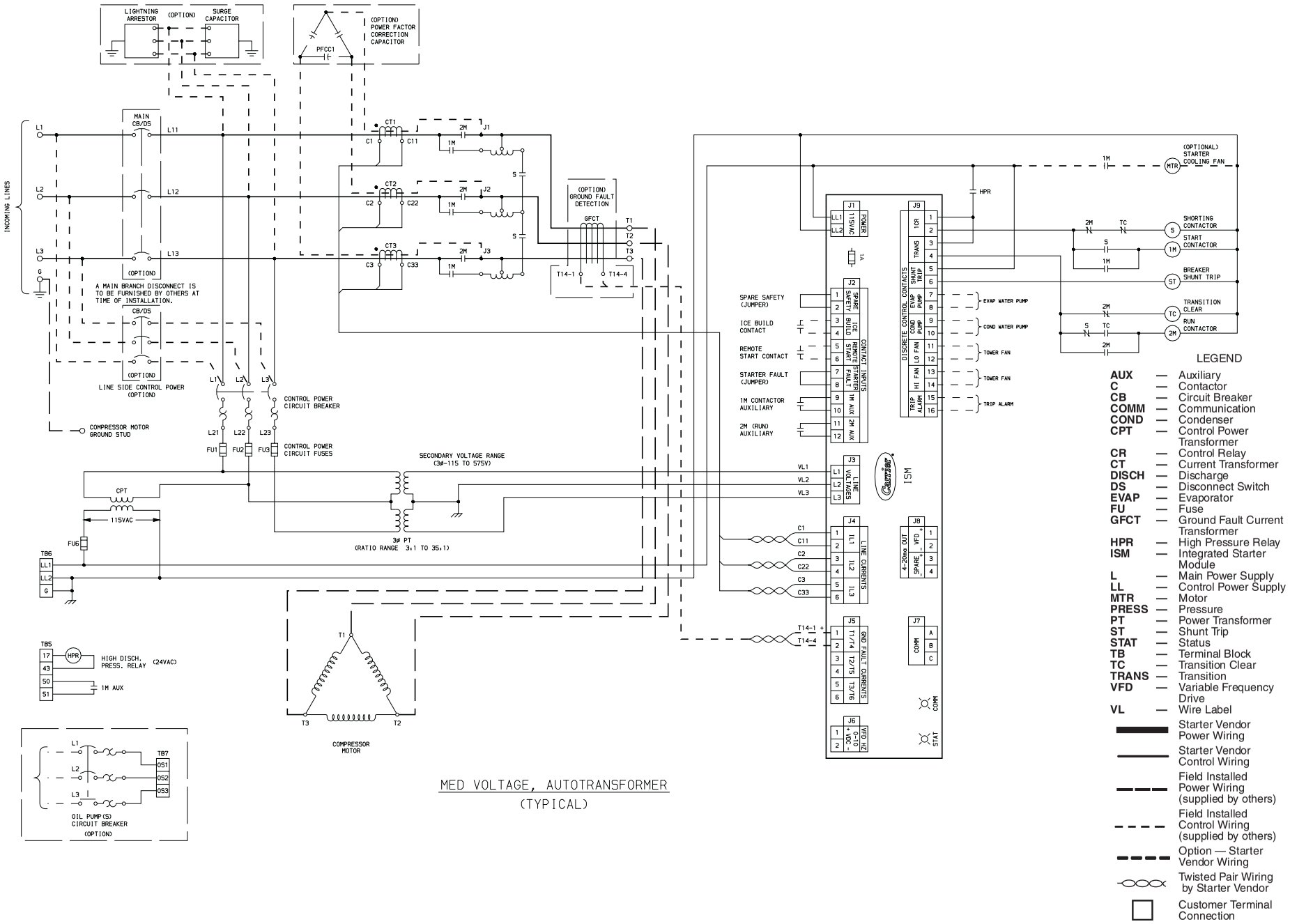

Fig. 68 — Typical Autotransformer Starter Wiring Schematic (Medium Voltage)

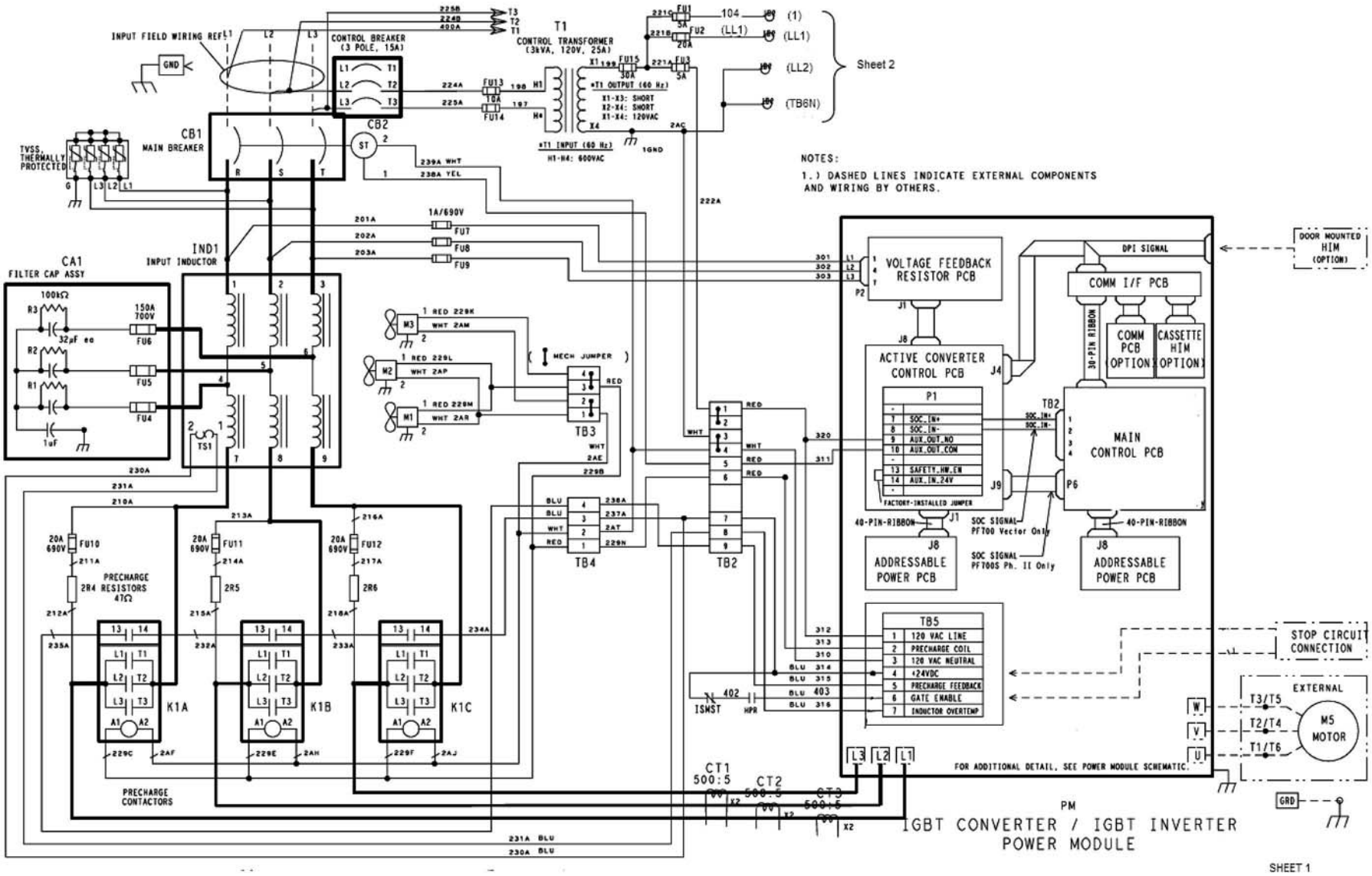

Fig. 69 — Typical Low-Voltage Variable Frequency Drive (VFD) Wiring Schematic (575 v)

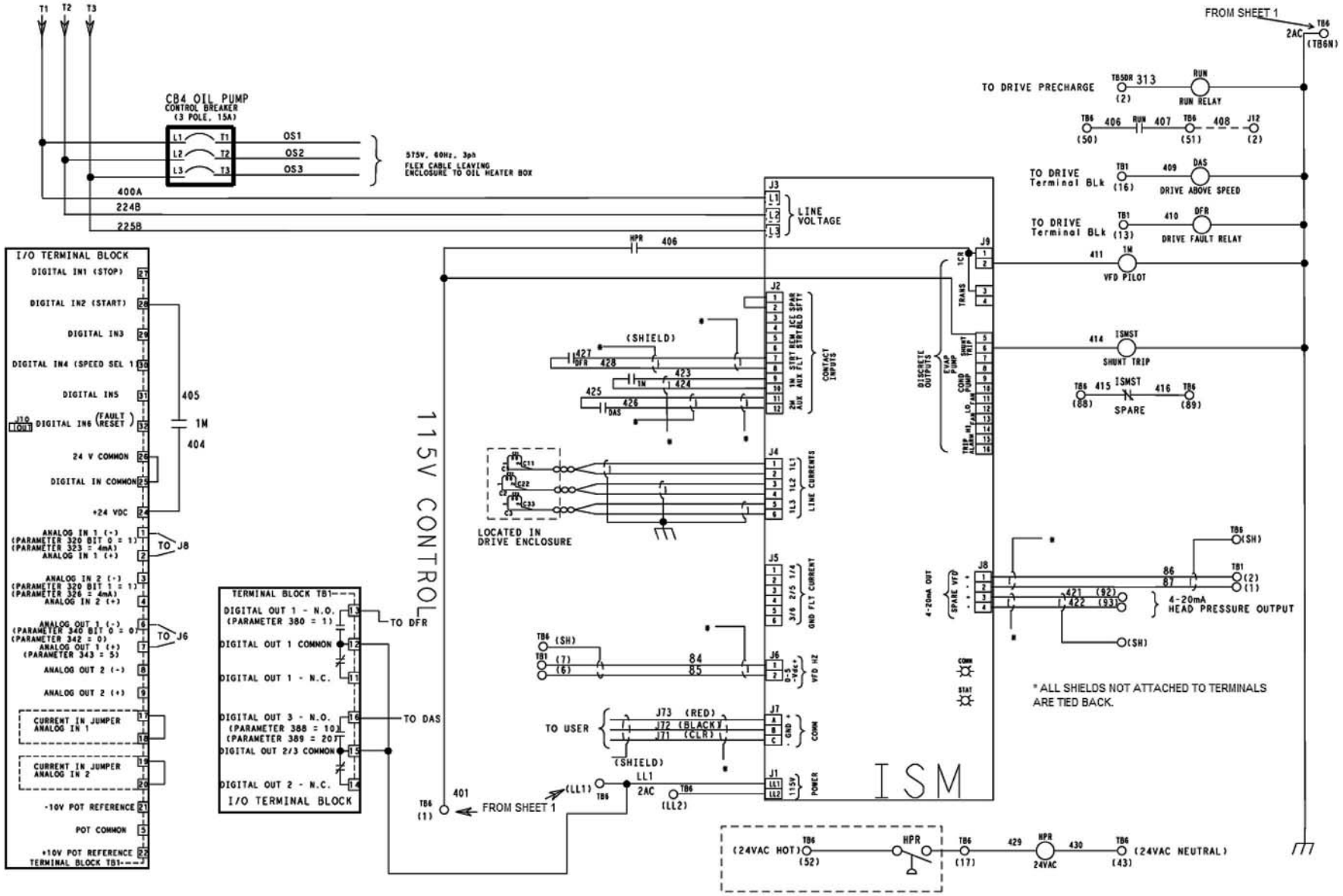

Fig. 69 — Typical Low-Voltage Variable Frequency Drive (VFD) Wiring Schematic (575 v) (cont)

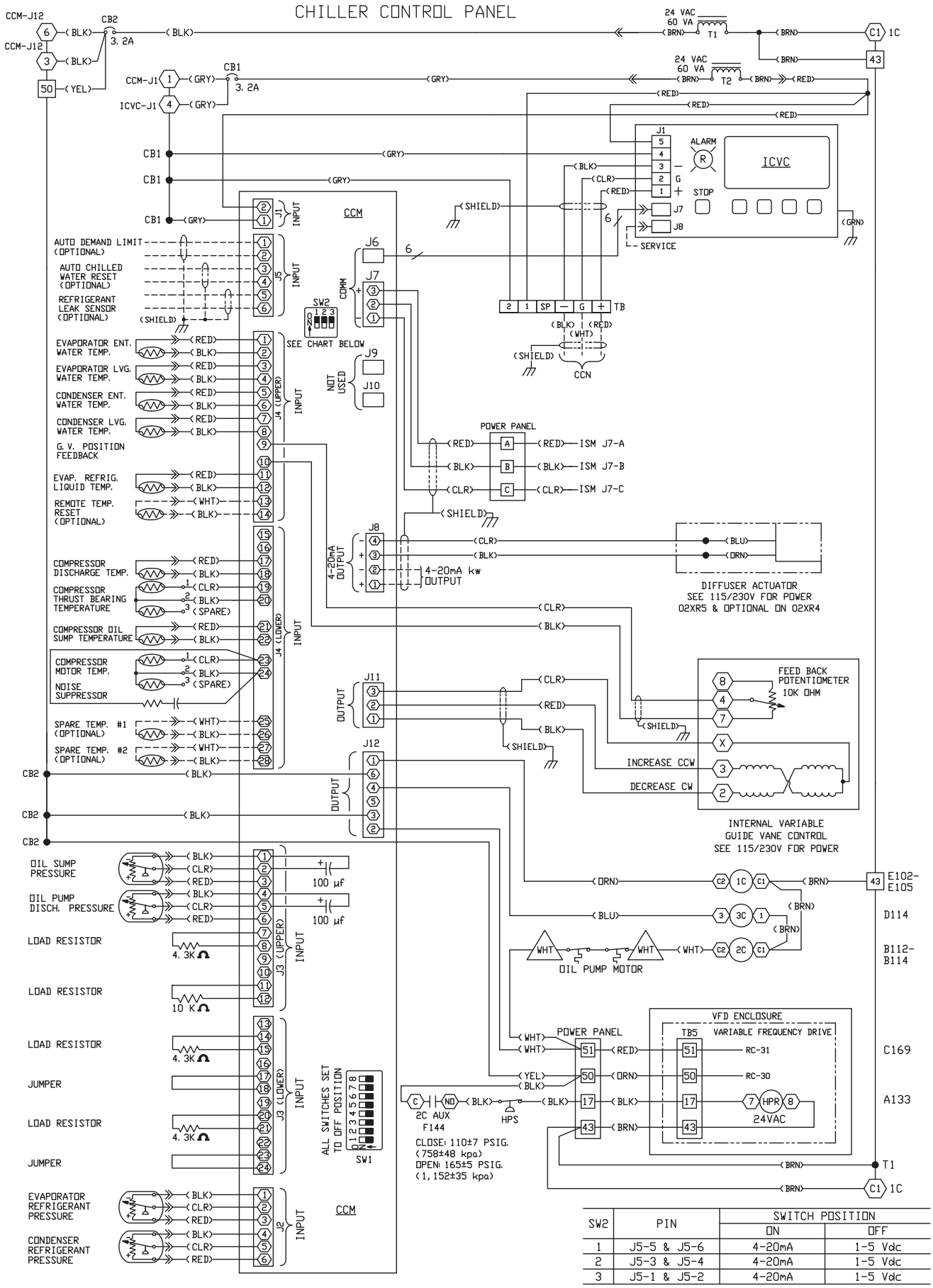

SW2	PIN	SWITCH POSITION	
		ON	OFF
1	J5-5 & J5-6	4-20mA	1-5 Vdc
2	J5-3 & J5-4	4-20mA	1-5 Vdc
3	J5-1 & J5-2	4-20mA	1-5 Vdc

Fig. 69 — Typical Low-Voltage Variable Frequency Drive (VFD) Wiring Schematic (575 v) (cont)

LEGEND FOR FIG. 69

AUX — Auxiliary
CB — Circuit Breaker
CCM — Chiller Control Module
CCN — Carrier Comfort Network
COMM — Communications
CT — Current Transformer
FU — Fuse
G — Chassis Ground
GV — Guide Vane
HPR — High Discharge Pressure Relay
HPS — High Pressure Switch
ICVC — International Chiller Visual Controller
IGBT — Insulated Gate Bipolar Transistor
ISM — Integrated Starter Module
J — Junction
ST — Shunt Trip
T — Transformer
TB — Terminal Block
VFD — Variable Frequency Drive
1C — Compressor Oil Heater Contactor
1M — Start Contactor
2C — Oil Pump Contactor
3C — Hot Gas Bypass Relay

Field Control Wiring
Field Power Wiring
Factory Wiring
Shielded Cable
Twisted Pair Wiring
Male/Female Connector
Terminal Block Connection
Wire Splice or Junction
Cam Switch
Component Terminal
Thermistor
Transducer
Fusible Link
Potentiometer
Pressure Switch

Compr Oil Pump Terminal
Cartridge Fuse
Earth Ground
Resistor
Chassis Ground
Light
Temperature Switch
Common Potential
Dry Contact
VFD Terminal
Current Transformer, Polarized (Direction Determined by •)
Transformer
IGBT
Diode
Silicon Controlled Rectifier

LEGEND FOR FIG. 70
19XR with Unit-Mounted VFD with ISM

REFERENCE NUMBER	EXPLANATION
1	3 Phase Under/Over Voltage (Line Side)
	Phase Loss/Imbalance/Reversal (Line Side)
	Frequency Shift (Line Side)
	kW Transducer/kW Hours/Demand kW
	Over Current
	Control Power Transformer (3KVA)
	Controls and Oil Heater Fused Disconnect (FU2)
	Oil Pump Circuit Fused Disconnect (FU1)
	Phase to Ground Fault Protection
	3 Phase Analog Volts/Amps Meter Package
2	System Feeder (Short Circuit, Ground Fault and Protection)
A	Evaporator Liquid Pump Starter Disconnect
B	Evaporator Liquid Pump Motor Starter
C	Condenser Liquid Pump Starter Disconnect
D	Condenser Liquid Pump Motor Starter
E	Cooling Tower Fan Motor Starter Disconnect (Low Fan/#1)
F	Cooling Tower Fan Motor Starter (Low Fan/#1)
G	Cooling Tower Fan Motor Starter Disconnect (High Fan/#2)
H	Cooling Tower Fan Motor Starter (High Fan/#2)
J	Spare Safety Devices [N.C.] See Note 3.1
K	Remote Start/Stop Device [N.O] See Note 3.1
L	Remote Alarm See Note 3.3
M	Remote Annunciator See Note 3.3
N	Lug Adapters See Note 2.3
P	Ice Build Start/Terminate Device See Note 3.1

See Notes on page 166.

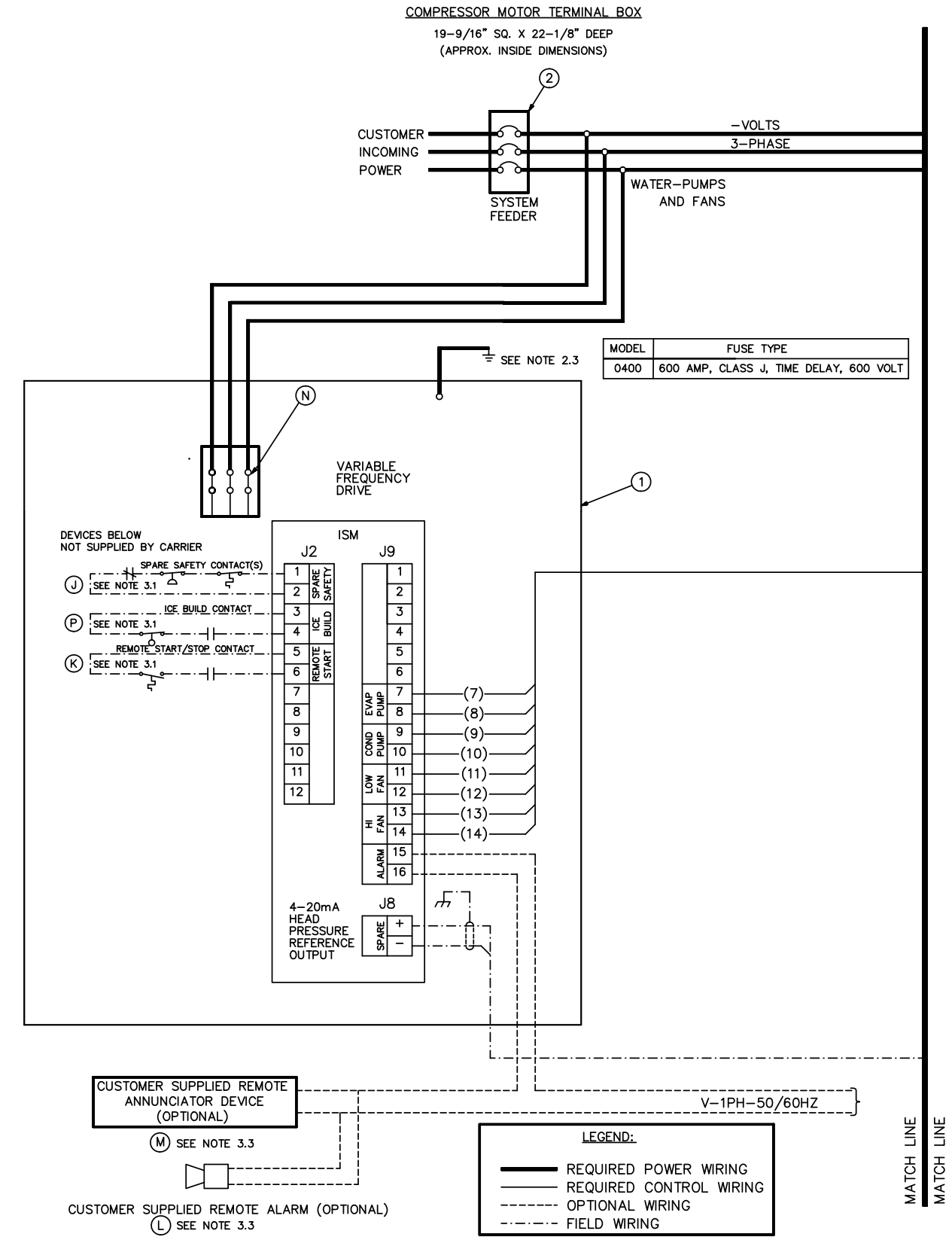

NOTE: See Legend on page 163.

Fig. 70 — 19XR Typical Wiring with Unit-Mounted Variable Frequency Drive with ISM (Integrated Starter Module)

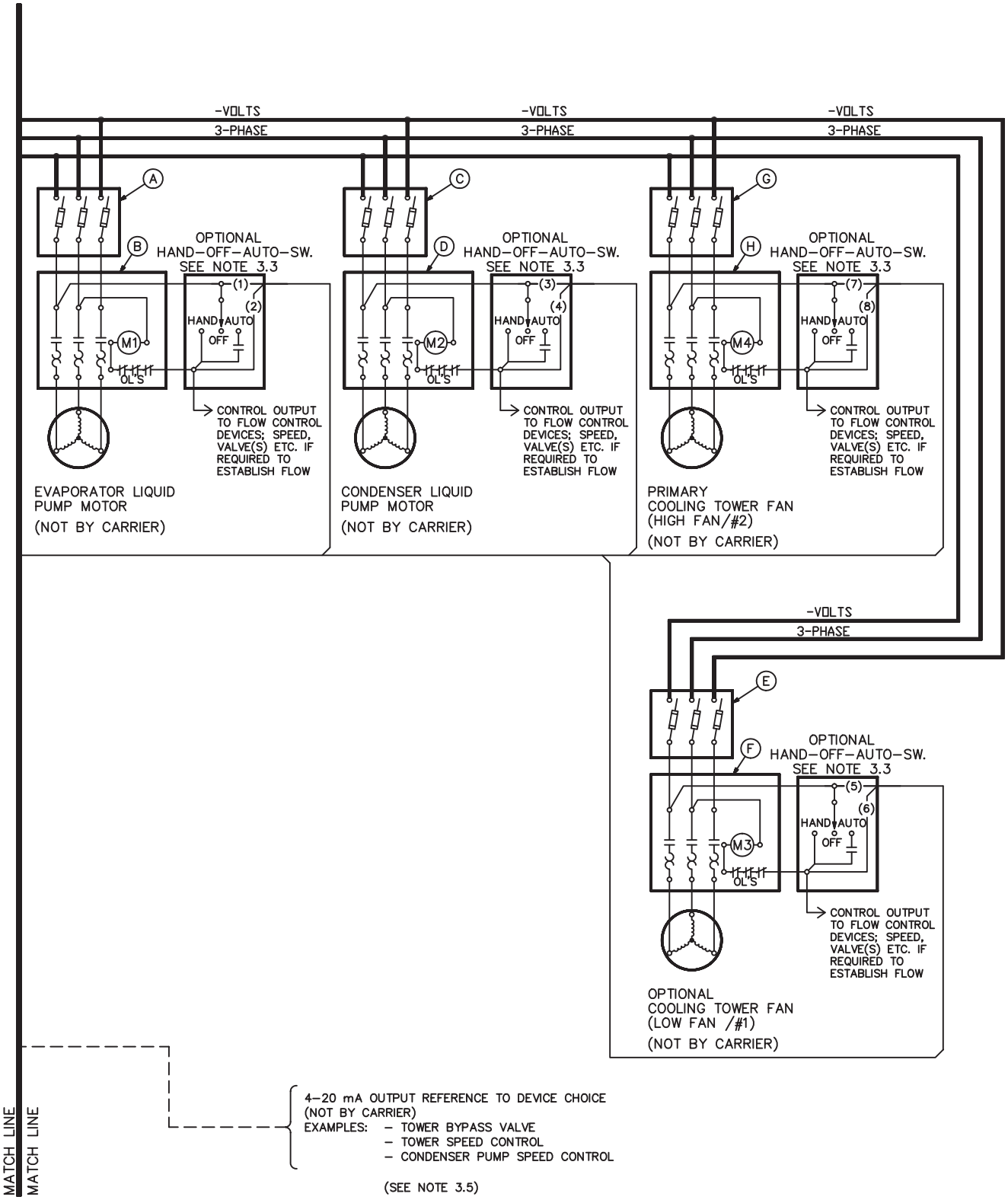

Fig. 70 — 19XR Typical Wiring with Unit-Mounted Variable Frequency Drive with ISM (Integrated Start Module) (cont)

NOTES FOR FIG. 70
19XR with Unit-Mounted VFD with ISM

I. GENERAL

1.0 Variable Frequency Drive (VFD) Starters shall be designed and manufactured in accordance with Carrier Engineering Requirement Z-416.

1.1 All field-supplied conductors, devices, and the field installation wiring, and termination of conductors and devices, must be in compliance with all applicable codes and job specifications.

⚠ CAUTION

To prevent damage to machine, do NOT punch holes or drill into the top surface of the VFD enclosure for field wiring. Knockouts are provided on the side of the VFD enclosure for field wiring connections.

1.2 The routing of field-installed conduit and conductors and the location of field-installed devices must not interfere with equipment access or the reading, adjusting, or servicing of any component.

1.3 Equipment installation and all starting and control devices, must comply with details in equipment submittal drawings and literature.

1.4 Contacts and switches are shown in the position they would assume with the circuit de-energized and the chiller shut down.

1.5 WARNING — Do not use aluminum conductors.

1.6 Installer is responsible for any damage caused by improper wiring between VFD and machine.

1.7 All field-installed wiring is field-supplied.

II. POWER WIRING TO VFD

2.0 Provide a local means of disconnecting power to VFD. Provide short circuit protection for the chiller and interconnecting wire at the branch feeder. The short circuit protection shall be fused type or equivalent circuit breaker.

2.1 Metal conduit must be used for the power wires from VFD to branch feeder.

2.2 Line side power conductor rating must meet the VFD nameplate voltage and chiller full load amps (minimum circuit ampacity).

2.3 Lug adapters may be required if installation conditions dictate that conductors be sized beyond the minimum ampacity required. Disconnect lugs will accommodate the quantity (#) and size (MCM) cables (per phase) as indicated in table below. If larger lugs are required, the lugs can be purchased from Cutler-Hammer.

VFD Max Input Amps	Standard 65KAIC Lug Capacity (Per Phase)	
	No. of Conductors	Conductor Range
390	3	2/0-400 MCM

2.4 Compressor motor and controls must be grounded by using equipment grounding lugs provided inside unit-mounted VFD enclosure.

2.5 Metering current transformers (CTs), if present, have an inner diameter of $2^3/_4$ in. Caution should be taken when selecting power wiring so that all power cables can pass through the CTs.

III. CONTROL WIRING

3.0 Field supplied control conductors to be at least 18 AWG or larger.

3.1 Ice build start/terminate device contacts, remote start/stop device contacts and spare safety device contacts (devices not supplied by Carrier), must have 24 VAC rating. MAX current is 60 mA, nominal current is 10 mA. Switches with gold plated bifurcated contacts are recommended.

3.2 Each integrated contact output can control loads (VA) for evaporator pump, condenser pump, tower fan low, tower fan high, and alarm annunciator devices rated 5 amps at 115 VAC and up to 3 amps at 277 VAC.

⚠ CAUTION

Control wiring for Carrier to start pumps and tower fan motors and establish flows must be provided to assure machine protection. If primary pump, tower fan, and flow control is by other means, also provide parallel means for control by Carrier. Failure to do so could result in machine freeze-up or overpressure.

Do not use control transformers in the control center as the power source for external or field-supplied contactor coils, actuator motors or any other loads.

3.4 Do not route control wiring carrying 30 v or less within a conduit which has wires carrying 50 v or higher or along side wires carrying 50 v or higher.

3.5 Spare 4-20 mA output signal is designed for controllers with a non-grounded 4-20 mA input signal and a maximum input impedance of 500 ohms.

3.8 Flow devices to confirm evaporator or condenser pump flow are not required. However; if flow devices are used, wire as shown in diagram below. Remove jumper installed at these terminals and wire in a 4.3 K resistor in its place. The flow device and resistor must be installed in parallel at these terminals such that the resistor provides a signal when the flow device is open.

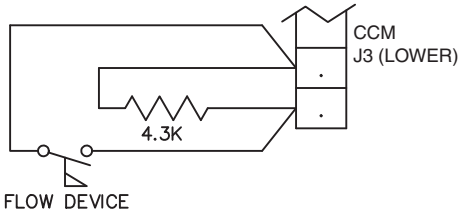

LEGEND FOR FIG. 71

AC — Alternating Current
ACB — Analog Control Board
AWG — American Wire Gage
CBx — Circuit Breaker
CPTx — Control Power Transformer
CTx — Current Transformer
DI — Drive Input Contactor
DI-IV — Drive Input Contactor Intellivac Module
DIC — Drive Input Control Relay
DICR1 — Drive Input Contactor Pilot Relay
DIIS — Drive Input Isolating Switch
DILR — Drive Input Line Reactor
DIOL — Drive Input Overload
DIOLx — Drive Input Overload Auxiliary Relay
DITB — Drive Input Contactor Terminal Blocks
DSx — Disconnect Switch
EMC — Electro-Magnetic Choke
ES — Ethernet Switch
FLT — Fault Relay
Fx — Fuse
GFCT — Ground Fault Current Transformer
GND — Ground
GRD — Ground
HECSU — Hall Effect Current Sensor (U Phase)
HECSW — Hall Effect Current Sensor (W Phase)
HPR — High Pressure Relay
IFM — Interface Module
ISM — Integrated Starter Module
LFC — Line Filter Capacitors
LFRNx — Line Reactor Fan x
LV — Low Voltage
LVx — External Low Voltage Supply
MFC — Motor Filter Capacitors
MFN1C — Main Fan Contactor
MFN1MP — Main fan Motor Protector
MOV — Metal Oxide Varistor
MSR — Monitoring Safety Relay
MSRXx — Monitoring Safety Relay Auxiliary Relay x
MV — Medium Voltage
NR — Neutral Resistor
PE — Earth Ground
PFN1 — Powerflex Interface Board
PP — Carrier Power Panel
PS1A — AC/DC Converter
PS2 — DC/DC Converter
PS4 — AC/DC Converter
RUN — Run Relay
SS — Surge Suppressor
ST — Shunt Trip
VFD — Variable Frequency Drive
VSBx — Voltage Sensing Board
WRN — Warning Relay
XIOx — External Inputs/Outputs
1M — Start Relay

66 Carrier ISM to be programmed by Carrier before start-up. Relay contacts shown without signal power applied.

71 Calibrate for 4-20 mA; 0-5 vdc (Default 0-10 vdc).

100 WARNING: Ground must be connected to prevent high voltages from being applied to drive control boards.

104 Located in drive low voltage control section.

105 Device is mounted on the low voltage door of the drive.

WIRING
Factory Wiring
Field Wiring
Mechanically Connected
Conductor, Crossing of Paths or Conductors Not Connected
Conductor, Junction of Connected Paths, Conductors or Wires
Conductor, Separable or Jacks Engaged
Terminal
Terminal (Rockwell Automation use only)
Terminal Blocks
— Barrier
Wired To/From Destination
SWITCHES AND INPUT DEVICES
Contact Normally Open (Make)
Contact Normally Closed (Break)
OUTPUT DEVICES
Fan (3 Phase Induction Motor)
Induction Machine
RESISTORS, CAPS, WINDINGS AND GROUND
Capacitor
Winding
Transformer, Current
PROTECTION
Circuit Breaker, Control/Power
Fuse, Control/Power
Surge Suppressor
POWER ELECTRONIC DEVICES
Symmetrical Gate-Commutated Thyristor and Gate Driver Board
MISCELLANEOUS
Note Number Indicator
Contact Location Description
Relay Location Description
Key Interlock on Isolation Switch
Key Interlock on MV Door
Multiple Barrel Key Interlock on Isolation Switch
Multiple Barrel Key Interlock on MV Door
Transfer Block

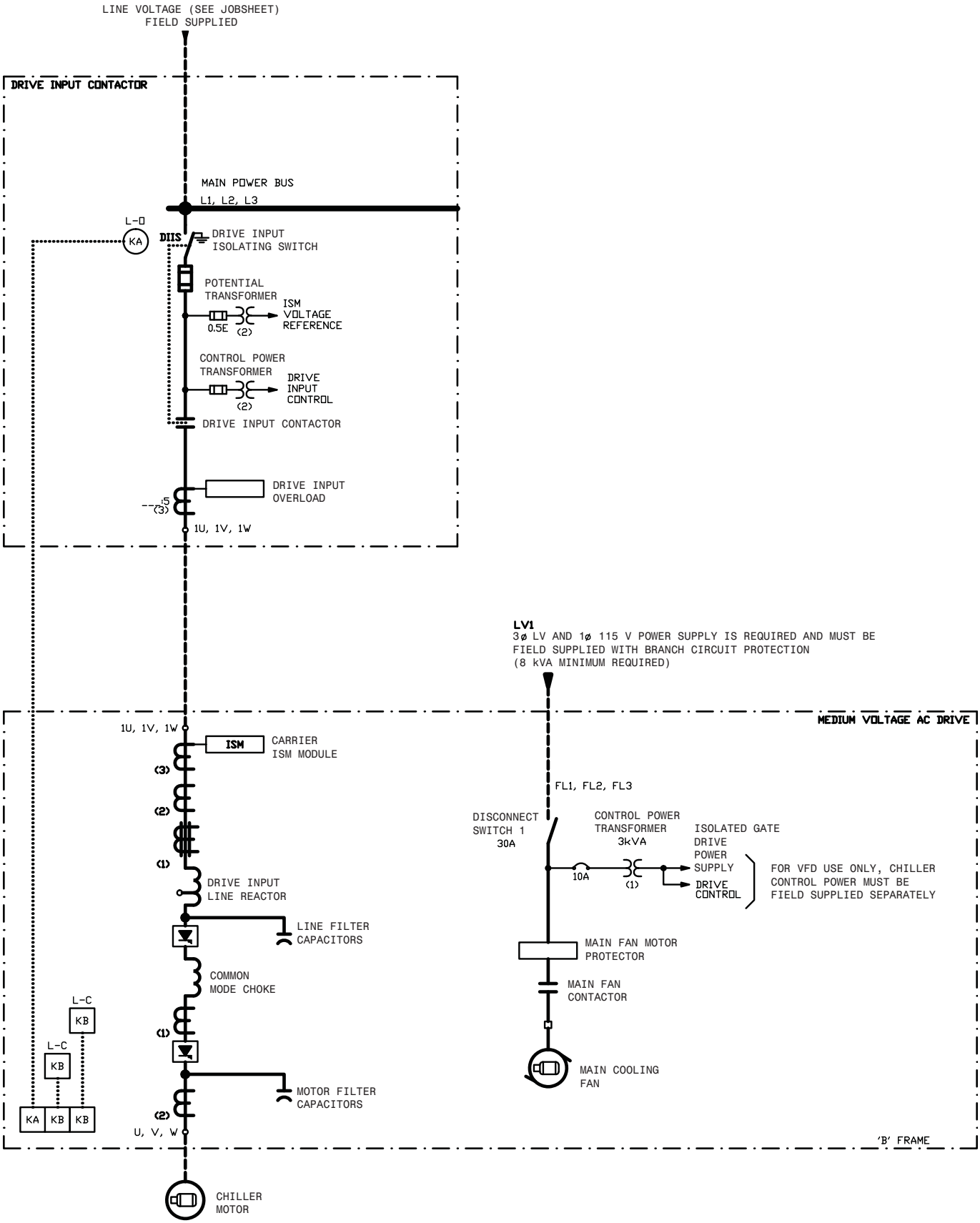

Fig. 71 — Typical Medium-Voltage Variable Frequency Drive (VFD) Wiring Schematic

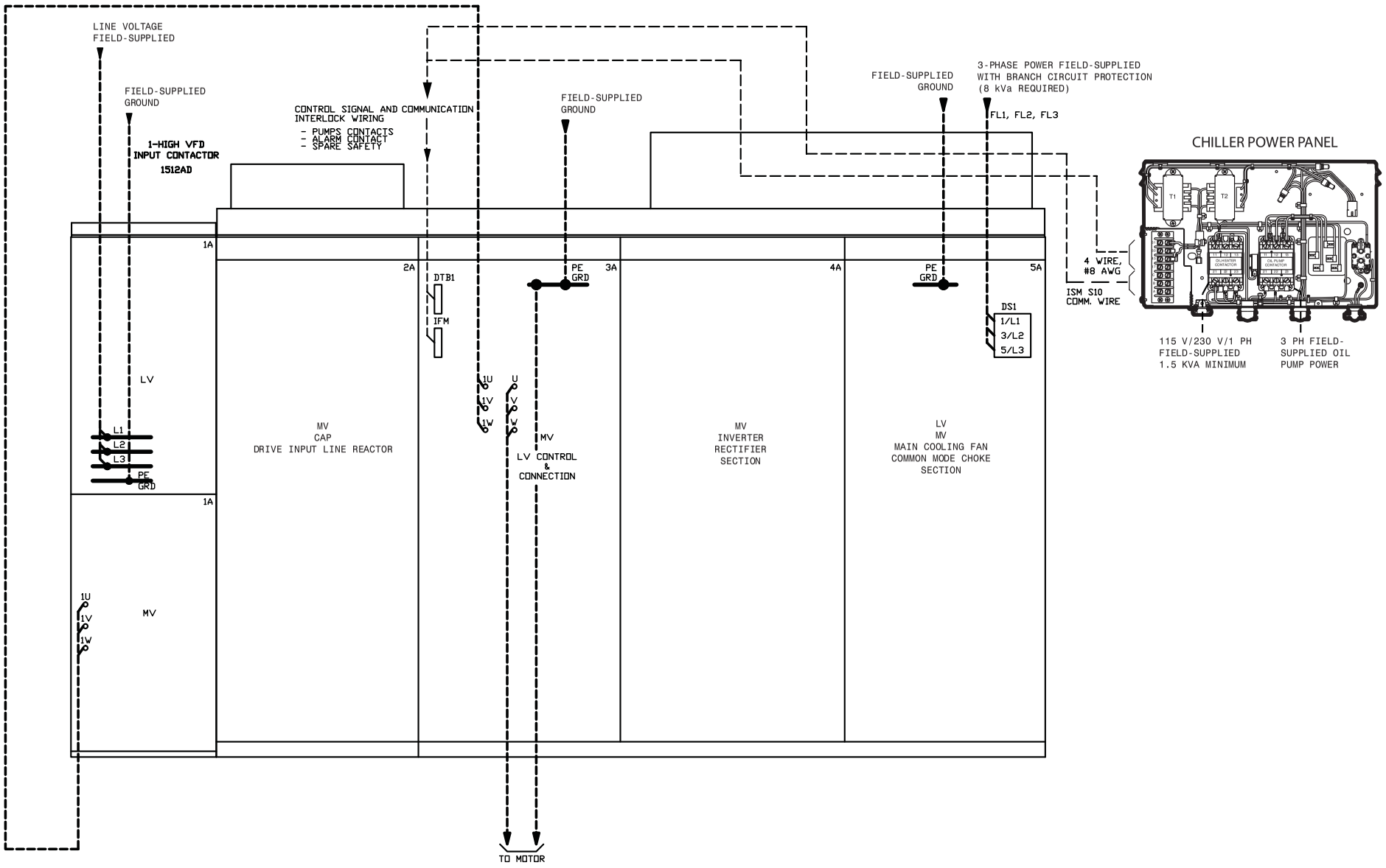

Fig. 71 — Typical Medium-Voltage Variable Frequency Drive (VFD) Wiring Schematic (cont)

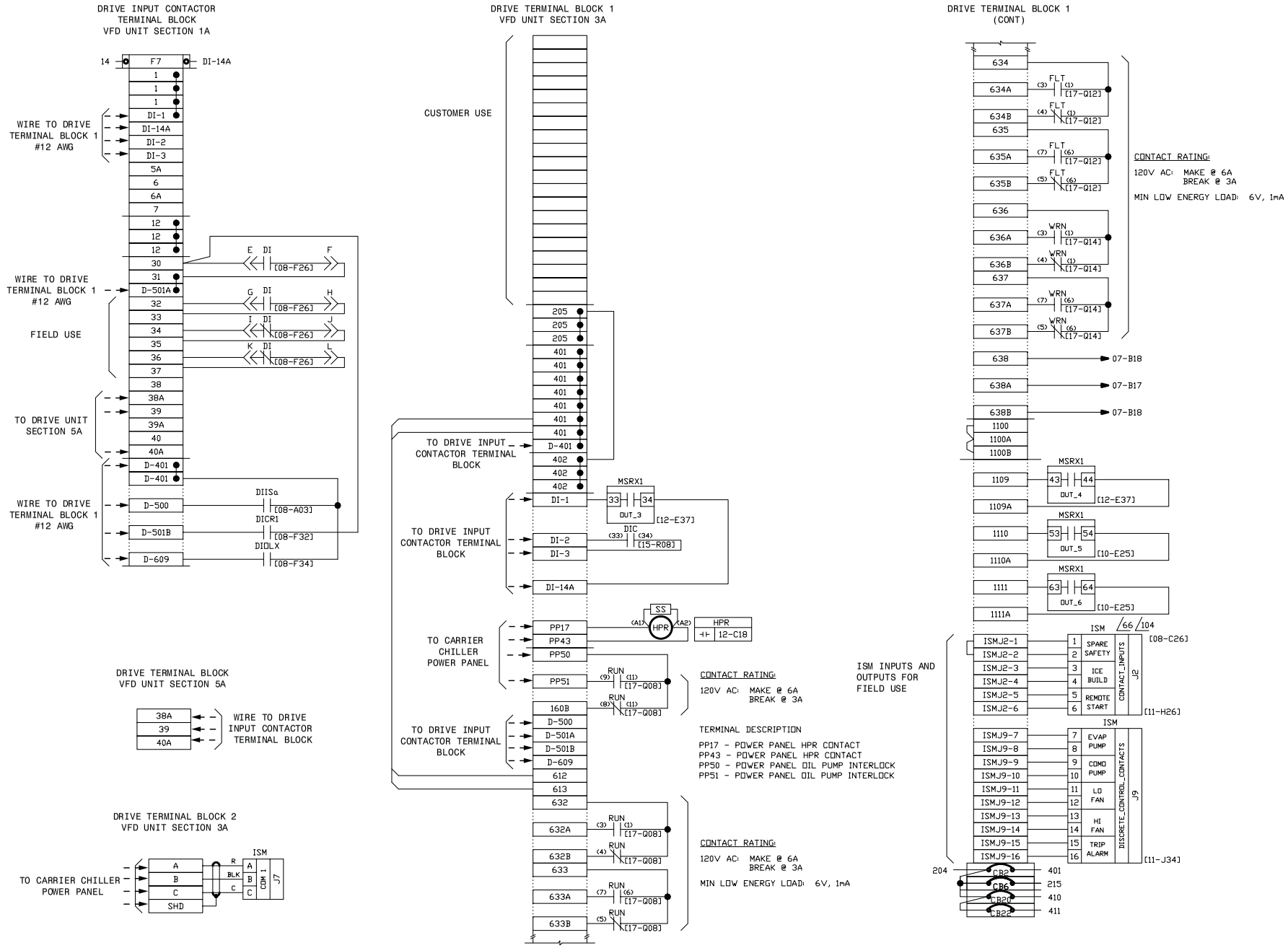

Fig. 71 — Typical Medium-Voltage Variable Frequency Drive (VFD) Wiring Schematic (cont)

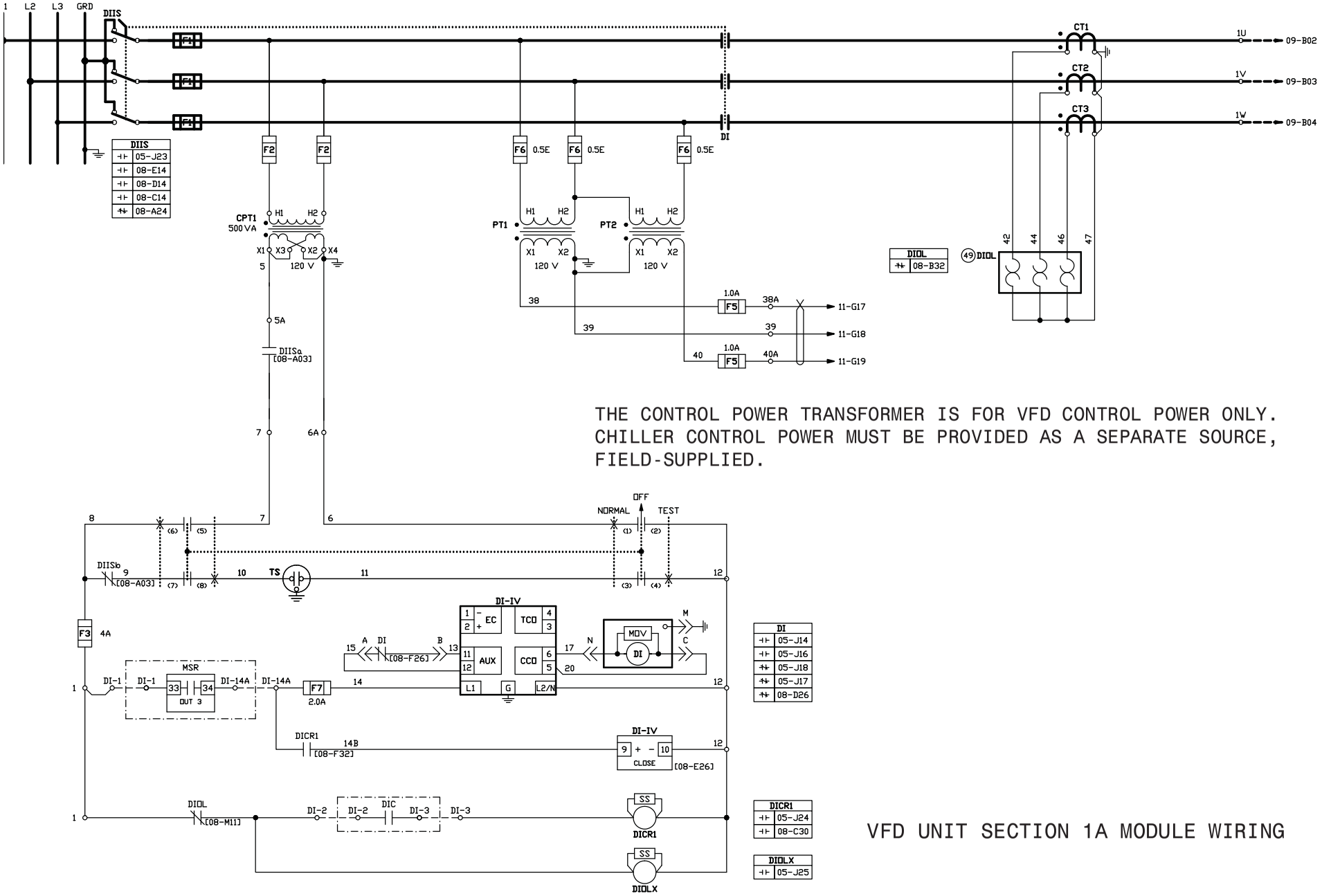

VFD UNIT SECTION 1A MODULE WIRING

Fig. 71 — Typical Medium-Voltage Variable Frequency Drive (VFD) Wiring Schematic (cont)

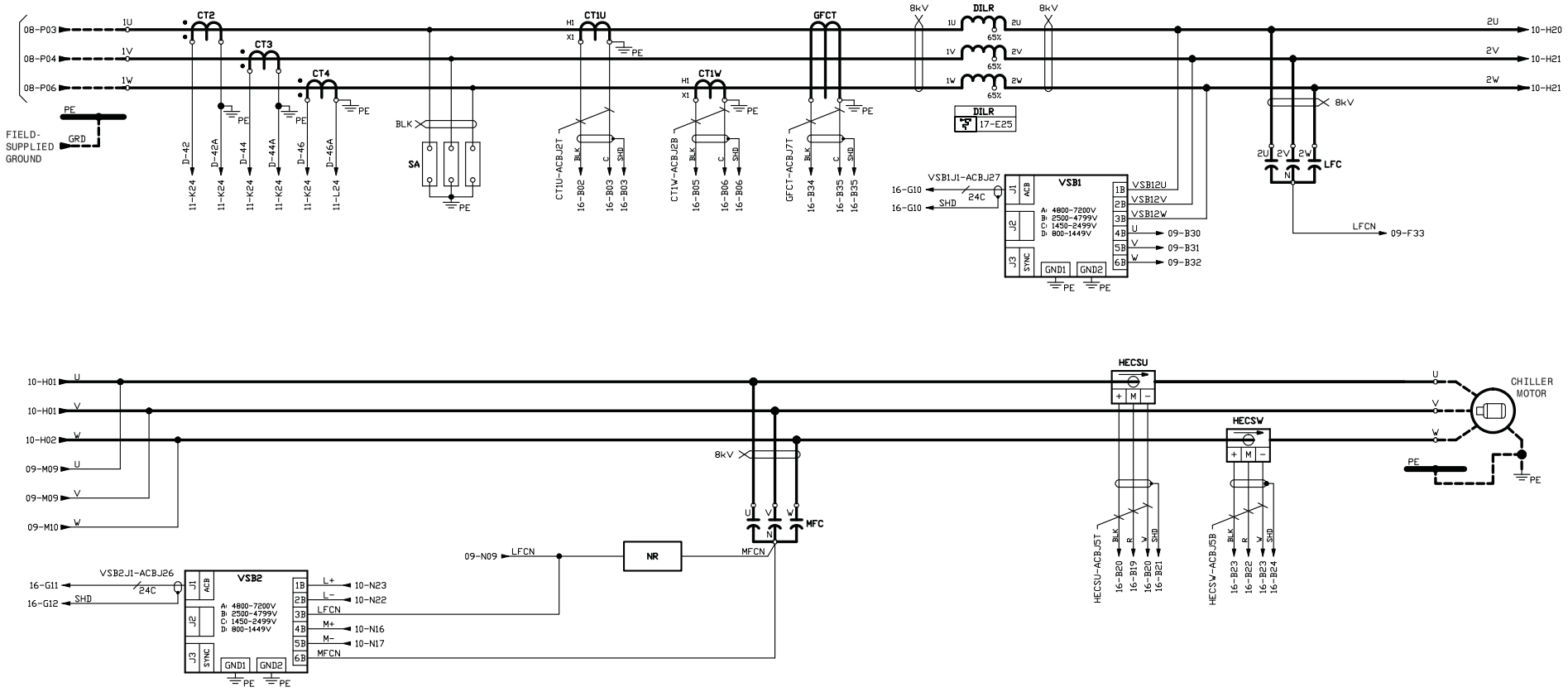

Fig. 71 — Typical Medium-Voltage Variable Frequency Drive (VFD) Wiring Schematic (cont)

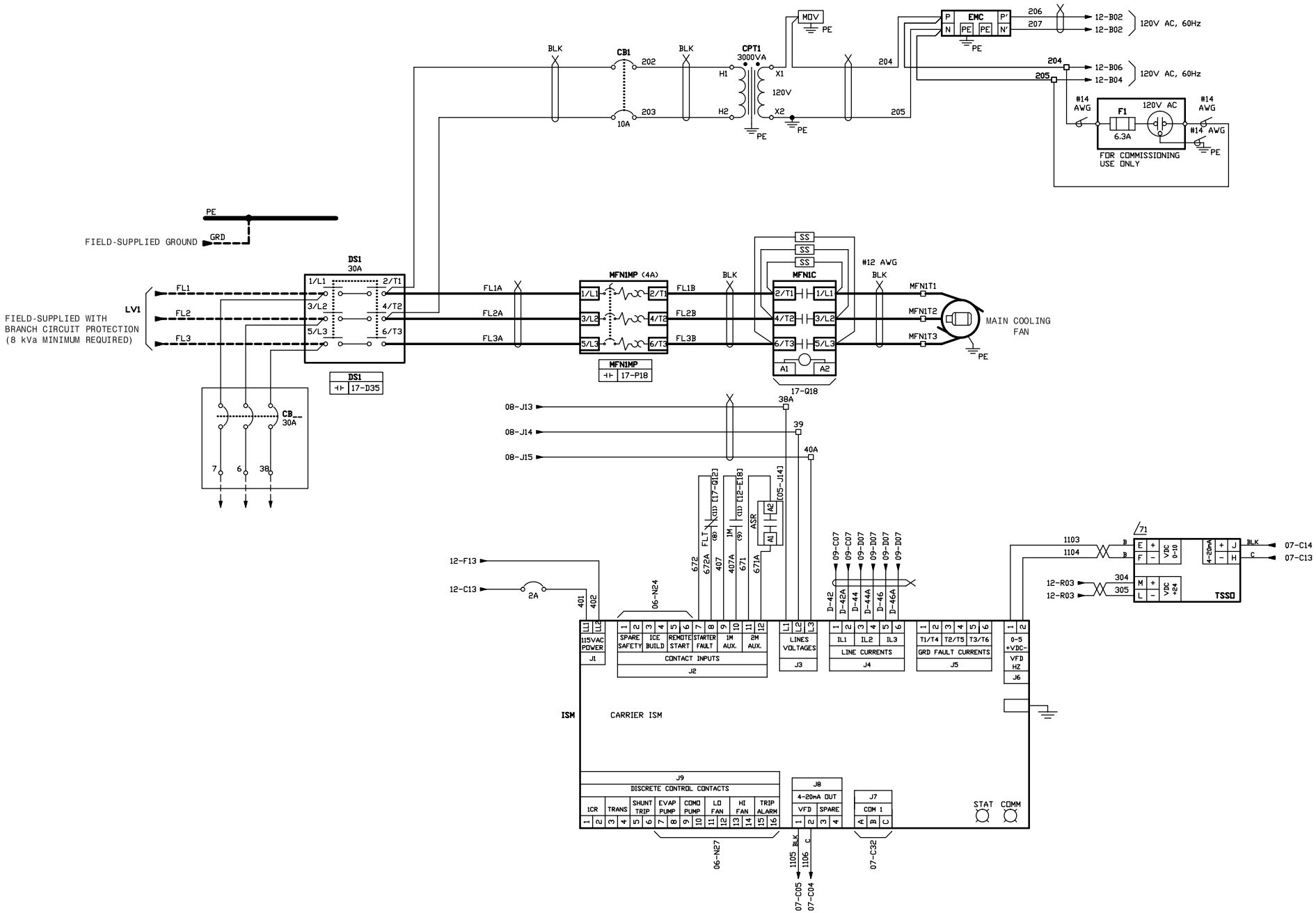

Fig. 71 — Typical Medium-Voltage Variable Frequency Drive (VFD) Wiring Schematic (cont)

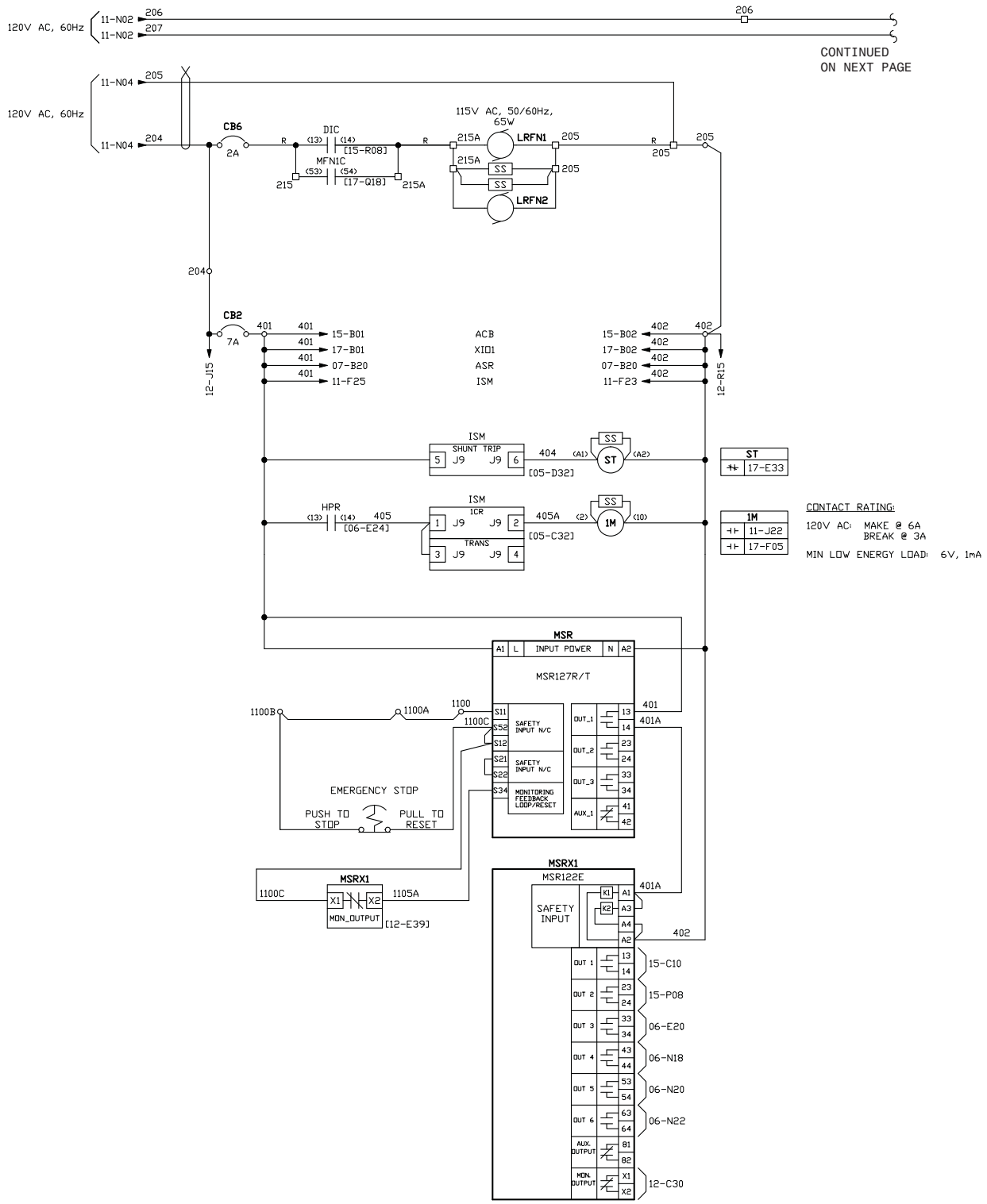

Fig. 71 — Typical Medium-Voltage Variable Frequency Drive (VFD) Wiring Schematic (cont)

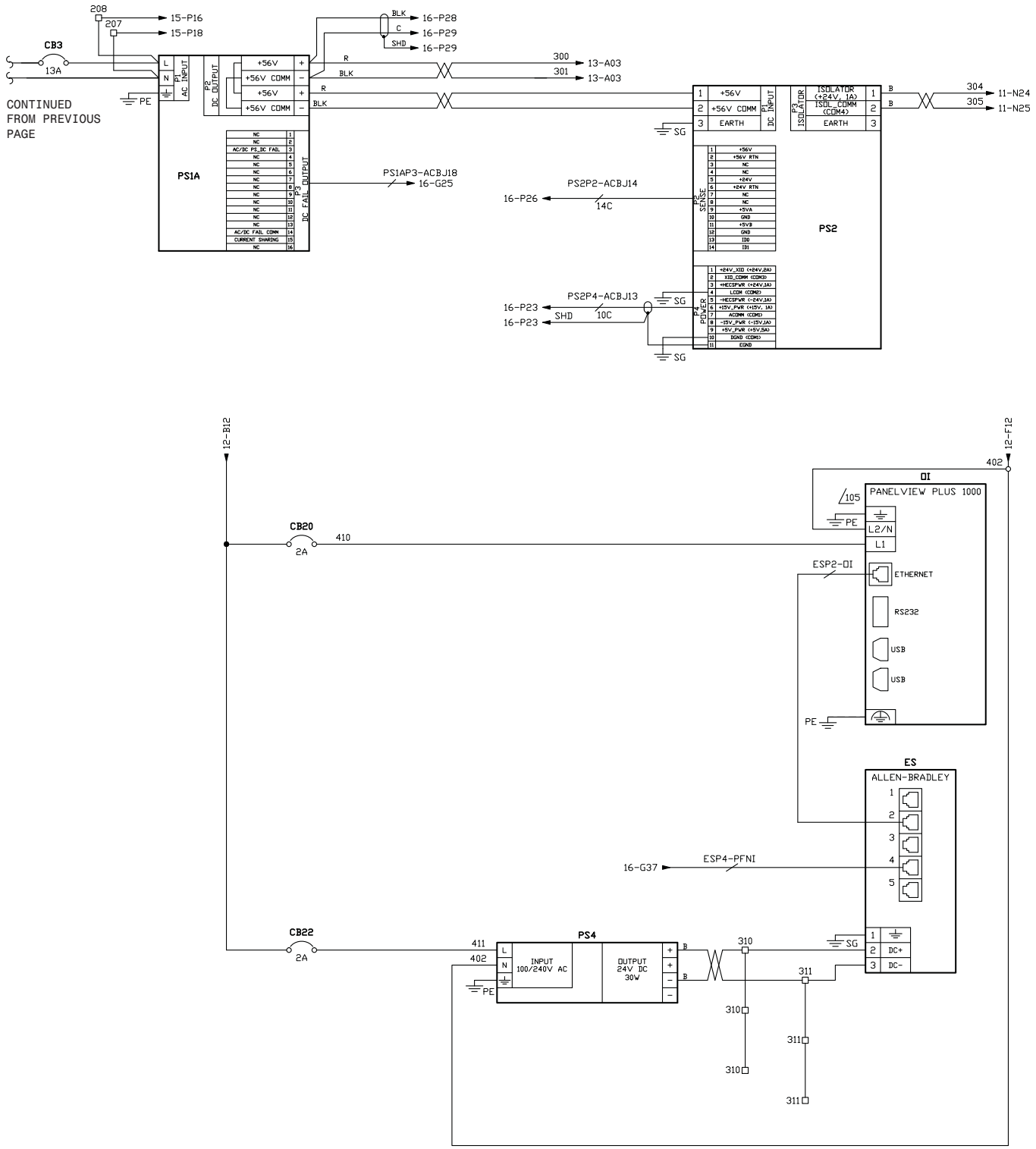

Fig. 71 — Typical Medium-Voltage Variable Frequency Drive (VFD) Wiring Schematic (cont)

NOTES FOR FIG. 71

19XR with Free-Standing Medium Voltage VFD

I. GENERAL

1.0 Variable Frequency Drive (VFD) shall be designed and manufactured in accordance with Carrier Engineering Requirement Z-416.

1.1 All field-supplied conductors, devices, and the field installation wiring, termination of conductors and devices, must be in compliance with all applicable codes and job specifications.

⚠ CAUTION

To prevent damage to machine, do NOT punch holes or drill into the top surface of the VFD enclosure for field wiring. Field wiring knockouts are provided on the top and side of the VFD enclosure for field wiring connections.

1.2 The routing of field-installed conduit and conductors and the location of field-installed devices must not interfere with equipment access or the reading, adjusting, or servicing of any component.

1.3 Equipment installation and all starting and control devices, must comply with details in equipment submittal drawings and literature.

1.4 Contacts and switches are shown in the position they would assume with the circuit de-energized and chiller shutdown.

1.5 WARNING - Do not use aluminum conductors.

1.6 Installer is responsible for any damage caused by improper wiring between VFD and machine.

1.7 All field-installed wiring is field-supplied.

II. POWER WIRING TO VFD

2.0 Provide a means of disconnecting power to VFD.

2.1 Lug adapters may be required if installation conditions dictate that conductors be sized beyond the minimum ampacity required. Contact VFD supplier for lug information.

2.2 Compressor motor and controls must be grounded by using equipment grounding lug provided inside VFD enclosure.

III. CONTROL WIRING

3.0 Field supplied control conductors to be at least 18 AWG or larger.

3.1 Optional Ice build start/terminate device contacts, optional remote start/stop device contacts and optional spare safety device contacts (devices not supplied by Carrier), must have 24 VAC rating. MAX current is 60 mA, nominal current is 10 mA. Switches with gold plated bifurcated contacts are recommended.

3.2 Remove jumper wire between ISM J2-1 and ISM J2-2 before connecting auxiliary safeties between these terminals.

3.3 Each integrated contact output can control loads (VA) for evaporator pump, condenser pump, tower fan low, tower fan high, and alarm annunciator devices rated 5 amps at 115 VAC and up to 3 amps at 277 VAC.

⚠ CAUTION

Control wiring for Carrier to start pumps and tower fan motors and establish flows must be provided to assure machine protection. If primary pump, tower fan, and flow control is by other means, also provide parallel means for control by Carrier. Failure to do so could result in machine freeze-up or overpressure.

Do not use control transformers in the control center as the power source for external or field-supplied contactor coils, actuator motors or any other loads.

3.4 Do not route control wiring carrying 30 v or less within a conduit which has wires carrying 50 v or higher or along side wires carrying 50 v or higher.

3.5 Control wiring between VFD and power panel must be separate shielded cables with minimum rating 600 v, 80 C. Ground shield at VFD

3.6 If optional pumpout/oil pump circuit breaker is not supplied within the starter enclosure, it must be located within sight of machine with wiring routed to suit.

3.7 When providing conductors for oil pump motor and oil heater power, refer to sizing data on label located on the chiller power panel, equipment submittal documentation or equipment product data catalog.

3.8 Spare 4-20 mA output signal is designed for controllers with a non-grounded 4-20 mA input signal and a maximum input impedance of 500 ohms.

IV. POWER WIRING BETWEEN FREE-STANDING VFD AND COMPRESSOR MOTOR

4.0 Medium voltage (over 600 volts) compressor motors have (3) terminals. Connections are $^{9}/_{16}$-in. threaded stud. A compression lug with a single $^{9}/_{16}$-in. diameter hole can be connected directly to the stud or 3 adapters are supplied for connecting a NEMA lug. Use suitable connectors and insulation for high voltage alternating current cable terminations (these items are not supplied by Carrier). Compressor motor starter must have nameplate stamped as to conforming with Carrier Engineering requirement "Z-416."

4.1 Power conductor rating must meet minimum unit nameplate voltage and compressor motor RLA. Refer to the label located on the side of the chiller control panel, equipment submittal documentation or equipment product data catalog for conductor sizing data. (Conductor as defined below may be a single lead or multiple smaller ampacity leads in parallel for the purpose of carrying the equivalent or higher current of a single larger lead.)

When (3) conductors are used:

Minimum ampacity per conductor = 1.25 x compressor RLA

When 96) conductors are used:

Minimum ampacity per conductor = 1.25 x compressor RLA/2

4.2 When more than one conduit is used to run conductors from VFD to compressor motor terminal box, an equal number of leads from each phase (conductor) must be in each conduit to prevent excessive heating. (For example, conductors to motor terminals 1, 2, and 3 in one conduit, and to 1, 2, and 3 in another conduit).

4.4 Compressor motor power conductors may enter terminal box through top, left side or bottom left using holes cut by contractor to suit conduit. Flexible conduit should be used for the last few feet to the terminal box for unit vibration isolation. Use of stress cones may require an oversize (special) motor terminal box (not supplied by Carrier).

4.3 Compressor motor frame to be grounded in accordance with the National Electrical Code (NFPA-70) and applicable codes. Means for grounding compressor motor is a #4 AWG to 500 MCM pressure connector, supplied and located in the lower left side corner of the compressor motor terminal box.

4.5 Do not allow motor terminals to support weight of wire cables. Use cable supports and strain reliefs as required.

4.6 Use backup wrench when tightening lead connectors to motor terminal studs. Torque to 30-35 ft-lb max.

4.7 Do not exceed 100 ft. maximum power cable length between the VFD and motor terminals without consulting Carrier for special requirements.

APPENDIX A — ICVC PARAMETER INDEX

PARAMETER	MENU SOFTKEY	TABLE	SCREEN NAME	CONFIGURABLE
1CR Start Complete	STATUS		ISM_STAT	
1CR Stop Complete	STATUS		ISM_STAT	
1M Start/Run Fault	STATUS		ISM_STAT	
1M/2M Stop Fault	STATUS		ISM_STAT	
1st Current Alarm State	SERVICE	CONTROL ALGORITHM STATUS	CUR_ALM	
20mA Demand Limit Opt	SERVICE	EQUIPMENT SERVICE	RAMP_DEM	X
2M Start/Run Fault	STATUS		ISM_STAT	
2nd Current Alarm State	SERVICE	CONTROL ALGORITHM STATUS	CUR_ALM	
3rd Current Alarm State	SERVICE	CONTROL ALGORITHM STATUS	CUR_ALM	
4th Current Alarm State	SERVICE	CONTROL ALGORITHM STATUS	CUR_ALM	
5th Current Alarm State	SERVICE	CONTROL ALGORITHM STATUS	CUR_ALM	
Active Delta Tsat	STATUS		COMPRESS	
Active Delta Tsat	STATUS		HEAT_EX	
Active Delta Tsat	SERVICE	CONTROL ALGORITHM STATUS	SURGEPREV	
Active Demand Limit	STATUS		MAINSTAT	
Active Region	SERVICE	CONTROL ALGORITHM STATUS	SURGEPREV	
Actual Guide Vane Pos	STATUS		STARTUP	
Actual Guide Vane Pos	STATUS		COMPRESS	
Actual Guide Vane Pos	STATUS		HEAT_EX	
Actual Guide Vane Pos	SERVICE	CONTROL ALGORITHM STATUS	CAPACITY	
Actual Guide Vane Pos	SERVICE	CONTROL ALGORITHM STATUS	SURGEPREV	
Actual Line Current	STATUS		POWER	
Actual Line Voltage	STATUS		POWER	
Actual Superheat	SERVICE	CONTROL ALGORITHM STATUS	OVERRIDE	
Actual VFD Speed	STATUS		COMPRESS	
Actual VFD Speed	SERVICE	CONTROL ALGORITHM STATUS	CAPACITY	
Address	SERVICE		ICVC CONFIGURATION	
Alarm Relay	STATUS		MAINSTAT	
Alarm Routing	SERVICE	EQUIPMENT CONFIGURATION	NET_OPT	x
Amps or KW Ramp %/Min.	SERVICE	EQUIPMENT SERVICE	RAMP_DEM	X
Amps/KW Ramp	SERVICE	CONTROL ALGORITHM STATUS	CAPACITY	
Auto Chilled Water Reset	STATUS		MAINSTAT	
Auto Demand Limit Input	STATUS		MAINSTAT	
Auto Restart Option	SERVICE	EQUIPMENT SERVICE	OPTIONS	X
Average Line Current	STATUS		MAINSTAT	
Average Line Current	STATUS		POWER	
Average Line Voltage	STATUS		POWER	
Base Demand Limit	SETPOINT		SETPOINT	X
Baud Rate	SERVICE		ICVC CONFIGURATION	
Broadcast Option	SERVICE	EQUIPMENT CONFIGURATION	NET_OPT	x
Bus Number	SERVICE		ICVC CONFIGURATION	
Calc Evap Sat Temp	STATUS		HEAT_EX	
Calc Evap Sat Temp	SERVICE	CONTROL ALGORITHM STATUS	OVERRIDE	
CCN Mode ?	STATUS		ICVCPSWD	
Chill Water Pulldown/Min	STATUS		HEAT_EX	
Chilled Medium	SERVICE	EQUIPMENT SERVICE	SETUP1	X
Chilled Water Deadband	SERVICE	EQUIPMENT SERVICE	SETUP1	X
Chilled Water Delta P	STATUS		HEAT_EX	
Chilled Water Delta T	STATUS		HEAT_EX	
Chilled Water Delta T	SERVICE	CONTROL ALGORITHM STATUS	SURGEPREV	
Chilled Water Flow	STATUS		STARTUP	
Chilled Water Pump	STATUS		STARTUP	
Chilled Water Temp	STATUS		MAINSTAT	
Chilled Water Temp	SERVICE	CONTROL ALGORITHM STATUS	WSMCHLRE	
Chiller Start/Stop	STATUS		MAINSTAT	
CHW Delta T->Full Reset	SERVICE	EQUIPMENT SERVICE	TEMP_CTL	X
CHW Delta T->No Reset	SERVICE	EQUIPMENT SERVICE	TEMP_CTL	X
CHW Setpoint Reset Value	SERVICE	CONTROL ALGORITHM STATUS	WSMCHLRE	
Commanded State	SERVICE	CONTROL ALGORITHM STATUS	WSMCHLRE	
Common Sensor Option	SERVICE	EQUIPMENT SERVICE	LEADLAG	X
Comp Discharge Alert	SERVICE	CONTROL ALGORITHM STATUS	OVERRIDE	
Comp Discharge Alert	SERVICE	EQUIPMENT SERVICE	SETUP1	X

PARAMETER	MENU SOFTKEY	TABLE	SCREEN NAME	CONFIGURABLE
Comp Discharge Temp	STATUS		COMPRESS	
Comp Discharge Temp	SERVICE	CONTROL ALGORITHM STATUS	OVERRIDE	
Comp Motor Temp Override	SERVICE	CONTROL ALGORITHM STATUS	OVERRIDE	
Comp Motor Temp Override	SERVICE	EQUIPMENT SERVICE	SETUP1	X
Comp Motor Winding Temp	STATUS		COMPRESS	
Comp Motor Winding Temp	SERVICE	CONTROL ALGORITHM STATUS	OVERRIDE	
Comp Thrust Brg Alert	SERVICE	CONTROL ALGORITHM STATUS	OVERRIDE	
Comp Thrust Brg Alert	SERVICE	EQUIPMENT SERVICE	SETUP1	X
Comp Thrust Brg Factor	SERVICE	EQUIPMENT SERVICE	SETUP1	X
Comp Thrust Brg Reset	STATUS		COMPRESS	
Comp Thrust Brg Reset	SERVICE	CONTROL ALGORITHM STATUS	OVERRIDE	
Comp Thrust Brg Temp	STATUS		COMPRESS	
Comp Thrust Brg Temp	SERVICE	CONTROL ALGORITHM STATUS	OVERRIDE	
Comp Thrust Brg Trip	SERVICE	CONTROL ALGORITHM STATUS	OVERRIDE	
Comp Thrust Brg Trip	SERVICE	EQUIPMENT SERVICE	SETUP1	X
Comp Thrust Lvg OilTemp	STATUS		COMPRESS	
Comp Thrust Lvg OilTemp	SERVICE	CONTROL ALGORITHM STATUS	OVERRIDE	
Compressor Ontime	STATUS		MAINSTAT	
Compressor Run Contact	STATUS		STARTUP	
Compressor Start Contact	STATUS		STARTUP	
Compressor Start Relay	STATUS		STARTUP	
Cond Approach Alert	SERVICE	EQUIPMENT SERVICE	SETUP1	X
Cond Flow Delta P Cutout	SERVICE	EQUIPMENT SERVICE	SETUP1	X
Cond Hi Flow Alarm Opt	SERVICE	EQUIPMENT SERVICE	SETUP1	X
Cond Hi Flow Del P Limit	SERVICE	EQUIPMENT SERVICE	SETUP1	X
Cond Press Override	SERVICE	CONTROL ALGORITHM STATUS	OVERRIDE	
Cond Press Override	SERVICE	EQUIPMENT SERVICE	SETUP1	X
Condenser Approach	STATUS		HEAT_EX	
Condenser Freeze Point	SERVICE	EQUIPMENT SERVICE	SETUP1	X
Condenser Pressure	STATUS		HEAT_EX	
Condenser Pressure	SERVICE	CONTROL ALGORITHM STATUS	OVERRIDE	
Condenser Refrig Temp	STATUS		HEAT_EX	
Condenser Refrig Temp	SERVICE	CONTROL ALGORITHM STATUS	OVERRIDE	
Condenser Water Delta P	STATUS		HEAT_EX	
Condenser Water Flow	STATUS		STARTUP	
Control Mode	STATUS		MAINSTAT	
Control Point	STATUS		MAINSTAT	
Control Point	SERVICE	CONTROL ALGORITHM STATUS	CAPACITY	
Control Point Error	SERVICE	CONTROL ALGORITHM STATUS	CAPACITY	
Current % Imbalance	SERVICE	ISM (STARTER) CONFIG DATA	ISM_CONF	X
Current CHW Setpoint	SERVICE	CONTROL ALGORITHM STATUS	WSMCHLRE	
Current Imbalance	STATUS		ISM_STAT	
Current Imbalance Time	SERVICE	ISM (STARTER) CONFIG DATA	ISM_CONF	X
Degrees Reset	SERVICE	EQUIPMENT SERVICE	TEMP_CTL	X
Degrees Reset	SERVICE	EQUIPMENT SERVICE	TEMP_CTL	X
Degrees Reset At 20 Ma	SERVICE	EQUIPMENT SERVICE	TEMP_CTL	X
Delta P at 0% (4 Ma)	SERVICE	EQUIPMENT SERVICE	OPTIONS	X
Delta P at 100% (20 mA)	SERVICE	EQUIPMENT SERVICE	OPTIONS	X
Demand Kilowatt	STATUS		POWER	
Demand Limit and KW Ramp	SERVICE	EQUIPMENT SERVICE	RAMP_DEM	X
Demand Limit At 20 mA	SERVICE	EQUIPMENT SERVICE	RAMP_DEM	X
Demand Limit Decrease	SERVICE	EQUIPMENT CONFIGURATION	NET_OPT	x
Demand Limit Inhibit	SERVICE	CONTROL ALGORITHM STATUS	CAPACITY	
Demand Limit Prop Band	SERVICE	EQUIPMENT SERVICE	RAMP_DEM	X
Demand Limit Source	SERVICE	EQUIPMENT SERVICE	RAMP_DEM	X
Demand Watts Interval	SERVICE	EQUIPMENT SERVICE	RAMP_DEM	X
Description	SERVICE		ICVC CONFIGURATION	
Device Name	SERVICE		ICVC CONFIGURATION	
Diffuser Actuator	STATUS		COMPRESS	
Diffuser Full Span mA	SERVICE	EQUIPMENT SERVICE	VDO_SRD	X
Diffuser Option	SERVICE	EQUIPMENT SERVICE	VDO_SRD	X
Disable Service Password	STATUS		ICVCPSWD	

PARAMETER	MENU SOFTKEY	TABLE	SCREEN NAME	CONFIGURABLE
ECW Control Option	SERVICE	EQUIPMENT SERVICE	TEMP_CTL	X
ECW Delta T	SERVICE	CONTROL ALGORITHM STATUS	CAPACITY	
ECW Reset	SERVICE	CONTROL ALGORITHM STATUS	CAPACITY	
ECW Setpoint	SETPOINT		SETPOINT	X
Emergency Stop	STATUS		MAINSTAT	
Enable Reset Type	SERVICE	EQUIPMENT SERVICE	TEMP_CTL	X
Entering Chilled Water	STATUS		HEAT_EX	
Entering Chilled Water	SERVICE	CONTROL ALGORITHM STATUS	CAPACITY	
Entering Condenser Water	STATUS		HEAT_EX	
Equipment Status	SERVICE	CONTROL ALGORITHM STATUS	WSMCHLRE	
Evap Approach Alert	SERVICE	EQUIPMENT SERVICE	SETUP1	X
Evap Flow Delta P Cutout	SERVICE	EQUIPMENT SERVICE	SETUP1	X
Evap Refrig Liquid Temp	STATUS		HEAT_EX	
Evap Refrig Trippoint	SERVICE	EQUIPMENT SERVICE	SETUP1	X
Evap Sat Override Temp	SERVICE	CONTROL ALGORITHM STATUS	OVERRIDE	
Evaporator Approach	STATUS		HEAT_EX	
Evaporator Pressure	STATUS		HEAT_EX	
Flow Delta P Display	SERVICE	EQUIPMENT SERVICE	SETUP1	X
Frequency	STATUS		POWER	
Frequency Out of Range	STATUS		ISM_STAT	
Frequency=60 Hz? (No=50)	SERVICE	ISM (STARTER) CONFIG DATA	ISM_CONF	X
Ground Fault	STATUS		ISM_STAT	
Ground Fault CT Ratio: 1	SERVICE	ISM (STARTER) CONFIG DATA	ISM_CONF	X
Ground Fault Current	SERVICE	ISM (STARTER) CONFIG DATA	ISM_CONF	X
Ground Fault Persistence	SERVICE	ISM (STARTER) CONFIG DATA	ISM_CONF	X
Ground Fault Phase 1	STATUS		POWER	
Ground Fault Phase 1	SERVICE	CONTROL ALGORITHM STATUS	ISM_HIST	
Ground Fault Phase 2	STATUS		POWER	
Ground Fault Phase 2	SERVICE	CONTROL ALGORITHM STATUS	ISM_HIST	
Ground Fault Phase 3	STATUS		POWER	
Ground Fault Phase 3	SERVICE	CONTROL ALGORITHM STATUS	ISM_HIST	
Ground Fault Protection?	SERVICE	ISM (STARTER) CONFIG DATA	ISM_CONF	X
Ground Fault Start Delay	SERVICE	ISM (STARTER) CONFIG DATA	ISM_CONF	X
Group Number	SERVICE	EQUIPMENT CONFIGURATION	NET_OPT	x
Guide Vane 25% Load (2)	SERVICE	EQUIPMENT SERVICE	VDO_SRD	X
Guide Vane 50% Load (2)	SERVICE	EQUIPMENT SERVICE	VDO_SRD	X
Guide Vane 75% Load (2)	SERVICE	EQUIPMENT SERVICE	VDO_SRD	X
Guide Vane Closure	SERVICE	EQUIPMENT SERVICE	OPTIONS	X
Guide Vane Delta	STATUS		COMPRESS	
Guide Vane Delta	SERVICE	CONTROL ALGORITHM STATUS	CAPACITY	
Guide Vane Delta	SERVICE	CONTROL ALGORITHM STATUS	SURGEPREV	
Guide Vane Travel Limit	SERVICE	EQUIPMENT SERVICE	SETUP2	X
Hardware Failure	STATUS		ISM_STAT	
Head Pressure Reference	STATUS		HEAT_EX	
HGBP Off Delta T	SERVICE	CONTROL ALGORITHM STATUS	SURGEPREV	
HGBP Off Delta T	SERVICE	EQUIPMENT SERVICE	OPTIONS	X
HGBP On Delta T	SERVICE	CONTROL ALGORITHM STATUS	SURGEPREV	
HGBP On Delta T	SERVICE	EQUIPMENT SERVICE	OPTIONS	X
HGBP/VFD Active	SERVICE	CONTROL ALGORITHM STATUS	SURGEPREV	
High Motor Amps	STATUS		ISM_STAT	
Hot Gas Bypass Relay	STATUS		HEAT_EX	
Hot Gas Bypass Relay	SERVICE	CONTROL ALGORITHM STATUS	SURGEPREV	
I2T Sum Heat-Phase 1	STATUS		POWER	
I2T Sum Heat-Phase 1	SERVICE	CONTROL ALGORITHM STATUS	ISM_HIST	
I2T Sum Heat-Phase 2	STATUS		POWER	
I2T Sum Heat-Phase 2	SERVICE	CONTROL ALGORITHM STATUS	ISM_HIST	
I2T Sum Heat-Phase 3	STATUS		POWER	
I2T Sum Heat-Phase 3	SERVICE	CONTROL ALGORITHM STATUS	ISM_HIST	
Ice Build Contact	STATUS		MAINSTAT	
Ice Build Option	SERVICE	EQUIPMENT SERVICE	OPTIONS	X
Ice Build Recycle	SERVICE	EQUIPMENT SERVICE	OPTIONS	X
Ice Build Setpoint	SETPOINT		SETPOINT	X

PARAMETER	MENU SOFTKEY	TABLE	SCREEN NAME	CONFIGURABLE
Ice Build Termination	SERVICE	EQUIPMENT SERVICE	OPTIONS	X
ISM Fault Status	STATUS		STARTUP	
ISM Fault Status	STATUS		ISM_STAT	
ISM Fault Status	SERVICE	CONTROL ALGORITHM STATUS	ISM_HIST	
ISM Power on Reset	STATUS		ISM_STAT	
LAG % Capacity	SERVICE	EQUIPMENT SERVICE	LEADLAG	X
LAG Address	SERVICE	EQUIPMENT SERVICE	LEADLAG	X
LAG CHILLER: Mode	SERVICE	CONTROL ALGORITHM STATUS	LL_MAINT	
LAG CHILLER: Recovery Start Request	SERVICE	CONTROL ALGORITHM STATUS	LL_MAINT	
LAG CHILLER: Run Status	SERVICE	CONTROL ALGORITHM STATUS	LL_MAINT	
LAG CHILLER: Start/Stop	SERVICE	CONTROL ALGORITHM STATUS	LL_MAINT	
LAG Start Time	SERVICE	CONTROL ALGORITHM STATUS	LL_MAINT	
LAG START Timer	SERVICE	EQUIPMENT SERVICE	LEADLAG	X
LAG Stop Time	SERVICE	CONTROL ALGORITHM STATUS	LL_MAINT	
LAG STOP Timer	SERVICE	EQUIPMENT SERVICE	LEADLAG	X
LCW Reset	SERVICE	CONTROL ALGORITHM STATUS	CAPACITY	
LCW Setpoint	SETPOINT		SETPOINT	X
LEAD CHILLER in Control	SERVICE	CONTROL ALGORITHM STATUS	LL_MAINT	
LEAD/LAG Configuration	SERVICE	EQUIPMENT SERVICE	LEADLAG	X
LEAD/LAG: Configuration	SERVICE	CONTROL ALGORITHM STATUS	LL_MAINT	
LEAD/LAG: Current Mode	SERVICE	CONTROL ALGORITHM STATUS	LL_MAINT	
Leaving Chilled Water	STATUS		HEAT_EX	
Leaving Chilled Water	SERVICE	CONTROL ALGORITHM STATUS	CAPACITY	
Leaving Condenser Water	STATUS		HEAT_EX	
LID Language	SERVICE		ICVC CONFIGURATION	
Lift @ 100% Load (1)	SERVICE	EQUIPMENT SERVICE	VDO_SRD	X
Lift @ 25% Load (1)	SERVICE	EQUIPMENT SERVICE	VDO_SRD	X
Lift @ 25% Load (2)	SERVICE	EQUIPMENT SERVICE	VDO_SRD	X
Line Current Phase 1	STATUS		POWER	
Line Current Phase 1	SERVICE	CONTROL ALGORITHM STATUS	ISM_HIST	
Line Current Phase 2	STATUS		POWER	
Line Current Phase 2	SERVICE	CONTROL ALGORITHM STATUS	ISM_HIST	
Line Current Phase 3	STATUS		POWER	
Line Current Phase 3	SERVICE	CONTROL ALGORITHM STATUS	ISM_HIST	
Line Frequency	SERVICE	CONTROL ALGORITHM STATUS	ISM_HIST	
Line Frequency Faulting	SERVICE	ISM (STARTER) CONFIG DATA	ISM_CONF	X
Line Voltage Phase 1	STATUS		POWER	
Line Voltage Phase 1	SERVICE	CONTROL ALGORITHM STATUS	ISM_HIST	
Line Voltage Phase 2	STATUS		POWER	
Line Voltage Phase 2	SERVICE	CONTROL ALGORITHM STATUS	ISM_HIST	
Line Voltage Phase 3	STATUS		POWER	
Line Voltage Phase 3	SERVICE	CONTROL ALGORITHM STATUS	ISM_HIST	
Load Balance Option	SERVICE	CONTROL ALGORITHM STATUS	LL_MAINT	
Load Balance Option	SERVICE	EQUIPMENT SERVICE	LEADLAG	X
Loadshed	SERVICE	CONTROL ALGORITHM STATUS	LOADSHED	
Loadshed Function	SERVICE	CONTROL ALGORITHM STATUS	LOADSHED	
Loadshed Timer	SERVICE	CONTROL ALGORITHM STATUS	LOADSHED	
Locked Rotor Start Delay	SERVICE	ISM (STARTER) CONFIG DATA	ISM_CONF	X
Locked Rotor Trip	STATUS		ISM_STAT	
Low Lift Profile Select	SERVICE	EQUIPMENT SERVICE	VDO_SRD	X
Maximum Loadshed Time	SERVICE	EQUIPMENT CONFIGURATION	NET_OPT	x
Minimum Load Point	SERVICE	EQUIPMENT SERVICE	OPTIONS	X
Minimum Output	SERVICE	EQUIPMENT SERVICE	OPTIONS	X
Model Number	SERVICE		ICVC CONFIGURATION	
Motor Amps Not Sensed	STATUS		ISM_STAT	
Motor Amps When Stopped	STATUS		ISM_STAT	
Motor Current CT Ratio: 1	SERVICE	ISM (STARTER) CONFIG DATA	ISM_CONF	X
Motor Kilowatt-Hours	STATUS		POWER	
Motor Kilowatts	STATUS		POWER	
Motor Locked Rotor Trip	SERVICE	ISM (STARTER) CONFIG DATA	ISM_CONF	X
Motor Percent Kilowatts	STATUS		MAINSTAT	
Motor Rated Kilowatts	SERVICE	EQUIPMENT SERVICE	RAMP_DEM	X

PARAMETER	MENU SOFTKEY	TABLE	SCREEN NAME	CONFIGURABLE
Motor Rated Line Voltage	SERVICE	ISM (STARTER) CONFIG DATA	ISM_CONF	X
Motor Rated Load Amps	SERVICE	ISM (STARTER) CONFIG DATA	ISM_CONF	X
Occupied?	STATUS		MAINSTAT	
Oil Heater Relay	STATUS		COMPRESS	
Oil Press Verify Time	SERVICE	EQUIPMENT SERVICE	SETUP1	X
Oil Pump Delta P	STATUS		STARTUP	
Oil Pump Delta P	STATUS		COMPRESS	
Oil Pump Relay	STATUS		STARTUP	
Oil Sump Temp	STATUS		COMPRESS	
Over/Under Volt Time	SERVICE	ISM (STARTER) CONFIG DATA	ISM_CONF	X
Overload Trip	STATUS		ISM_STAT	
Override Decrease Active	SERVICE	CONTROL ALGORITHM STATUS	SURGEPREV	
Override Inhibit Active	SERVICE	CONTROL ALGORITHM STATUS	SURGEPREV	
OverVoltage	STATUS		ISM_STAT	
Overvoltage Threshold	SERVICE	ISM (STARTER) CONFIG DATA	ISM_CONF	X
Password	SERVICE		ICVC CONFIGURATION	
Phase 1 Fault	STATUS		ISM_STAT	
Phase 1 Faulted?	SERVICE	CONTROL ALGORITHM STATUS	ISM_HIST	
Phase 2 Fault	STATUS		ISM_STAT	
Phase 2 Faulted?	SERVICE	CONTROL ALGORITHM STATUS	ISM_HIST	
Phase 3 Fault	STATUS		ISM_STAT	
Phase 3 Faulted?	SERVICE	CONTROL ALGORITHM STATUS	ISM_HIST	
Phase Loss	STATUS		ISM_STAT	
Phase Reversal	STATUS		ISM_STAT	
Power Factor	STATUS		POWER	
Pressure Trip Contact	STATUS		ISM_STAT	
PRESTART FAULT Time	SERVICE	CONTROL ALGORITHM STATUS	LL_MAINT	
PRESTART FAULT Timer	SERVICE	EQUIPMENT SERVICE	LEADLAG	X
Proportional Dec Band	SERVICE	EQUIPMENT SERVICE	SETUP2	X
Proportional ECW Gain	SERVICE	EQUIPMENT SERVICE	SETUP2	X
Proportional Inc Band	SERVICE	EQUIPMENT SERVICE	SETUP2	X
Pulldown Ramp Type:	SERVICE	EQUIPMENT SERVICE	RAMP_DEM	X
PULLDOWN Time	SERVICE	CONTROL ALGORITHM STATUS	LL_MAINT	
PULLDOWN Timer	SERVICE	EQUIPMENT SERVICE	LEADLAG	X
Pulldown: Delta T / Min	SERVICE	CONTROL ALGORITHM STATUS	LL_MAINT	
Pulldown: Satisfied?	SERVICE	CONTROL ALGORITHM STATUS	LL_MAINT	
Ramp Loading Active	SERVICE	CONTROL ALGORITHM STATUS	SURGEPREV	
Re-alarm Time	SERVICE	EQUIPMENT CONFIGURATION	NET_OPT	x
Redline	SERVICE	CONTROL ALGORITHM STATUS	LOADSHED	
Reference Number	SERVICE		ICVC CONFIGURATION	
Refrig Override Delta T	SERVICE	EQUIPMENT SERVICE	SETUP1	X
Refrigerant Leak Alarm mA	SERVICE	EQUIPMENT SERVICE	OPTIONS	X
Refrigerant Leak Option	SERVICE	EQUIPMENT SERVICE	OPTIONS	X
Refrigerant Leak Sensor	STATUS		MAINSTAT	
Remote Contacts Option	SERVICE	EQUIPMENT SERVICE	OPTIONS	X
Remote Reset Option	STATUS		ICVCPSWD	
Remote Reset Sensor	STATUS		MAINSTAT	
Remote Start Contact	STATUS		MAINSTAT	
Remote Temp->Full Reset	SERVICE	EQUIPMENT SERVICE	TEMP_CTL	X
Remote Temp->No Reset	SERVICE	EQUIPMENT SERVICE	TEMP_CTL	X
Reset Alarm ?	STATUS		ICVCPSWD	
Restart Delta T	SERVICE	EQUIPMENT SERVICE	SETUP1	X
Run Status	STATUS		MAINSTAT	
Schedule Number	SERVICE	EQUIPMENT CONFIGURATION	NET_OPT	x
Serial Number	SERVICE		ICVC CONFIGURATION	
Service Ontime	STATUS		MAINSTAT	
Shunt Trip Relay	STATUS		STARTUP	
Shutdown Delta T	SERVICE	EQUIPMENT SERVICE	SETUP1	X
Single Cycle Dropout	STATUS		ISM_STAT	
Single Cycle Dropout	SERVICE	ISM (STARTER) CONFIG DATA	ISM_CONF	X
Soft Stop Amps Threshold	SERVICE	EQUIPMENT SERVICE	OPTIONS	X
Software Part Number	SERVICE		ICVC CONFIGURATION	

PARAMETER	MENU SOFTKEY	TABLE	SCREEN NAME	CONFIGURABLE
Spare Safety Input	STATUS		STARTUP	
Spare Temp #1 Enable	SERVICE	EQUIPMENT SERVICE	SETUP1	X
Spare Temp #1 Limit	SERVICE	EQUIPMENT SERVICE	SETUP1	X
Spare Temp #2 Enable	SERVICE	EQUIPMENT SERVICE	SETUP1	X
Spare Temp #2 Limit	SERVICE	EQUIPMENT SERVICE	SETUP1	X
Spare Temperature 1	STATUS		COMPRESS	
Spare Temperature 1	SERVICE	CONTROL ALGORITHM STATUS	LL_MAINT	
Spare Temperature 2	STATUS		COMPRESS	
Spare Temperature 2	SERVICE	CONTROL ALGORITHM STATUS	LL_MAINT	
Speed Change in Effect	SERVICE	CONTROL ALGORITHM STATUS	SURGEPREV	
SRD 25% Load (1)	SERVICE	EQUIPMENT SERVICE	VDO_SRD	X
SRD 50% Load (1)	SERVICE	EQUIPMENT SERVICE	VDO_SRD	X
SRD 75% Load (1)	SERVICE	EQUIPMENT SERVICE	VDO_SRD	X
SRD IGV Offset Select	SERVICE	EQUIPMENT SERVICE	VDO_SRD	X
SRD Rotating Stall	STATUS		COMPRESS	
STANDBY % Capacity	SERVICE	EQUIPMENT SERVICE	LEADLAG	X
STANDBY Address	SERVICE	EQUIPMENT SERVICE	LEADLAG	X
STANDBY Chiller Option	SERVICE	EQUIPMENT SERVICE	LEADLAG	X
STANDBY CHILLER Recovery Start Request	SERVICE	CONTROL ALGORITHM STATUS	LL_MAINT	
STANDBY CHILLER Run Status	SERVICE	CONTROL ALGORITHM STATUS	LL_MAINT	
STANDBY CHILLER Start/Stop	SERVICE	CONTROL ALGORITHM STATUS	LL_MAINT	
STANDBY CHILLER: Mode	SERVICE	CONTROL ALGORITHM STATUS	LL_MAINT	
Start Inhibit Timer	STATUS		MAINSTAT	
Starter Acceleration Fault	STATUS		ISM_STAT	
Starter Fault	STATUS		STARTUP	
Starter Fault	STATUS		ISM_STAT	
Starter LRA Rating	SERVICE	ISM (STARTER) CONFIG DATA	ISM_CONF	X
Starter LRA Trip	STATUS		ISM_STAT	
Starter Trans Relay	STATUS		STARTUP	
Starter Type	SERVICE	ISM (STARTER) CONFIG DATA	ISM_CONF	X
Starts In 12 Hours	STATUS		MAINSTAT	
Superheat Required	SERVICE	CONTROL ALGORITHM STATUS	OVERRIDE	
Surge Counts	SERVICE	CONTROL ALGORITHM STATUS	SURGEPREV	
Surge Delay Time	SERVICE	EQUIPMENT SERVICE	OPTIONS	X
Surge Delta % Amps	SERVICE	EQUIPMENT SERVICE	OPTIONS	X
Surge Limit/HGBP Option	SERVICE	CONTROL ALGORITHM STATUS	SURGEPREV	
Surge Limit/HGBP Option	SERVICE	EQUIPMENT SERVICE	OPTIONS	X
Surge Line Delta Tsat	STATUS		COMPRESS	
Surge Line Delta Tsat	STATUS		HEAT_EX	
Surge Line Delta Tsat	SERVICE	CONTROL ALGORITHM STATUS	SURGEPREV	
Surge Line High Offset	SERVICE	EQUIPMENT SERVICE	OPTIONS	X
Surge Line Shape Factor	SERVICE	EQUIPMENT SERVICE	OPTIONS	X
Surge Line Speed Factor	SERVICE	EQUIPMENT SERVICE	OPTIONS	X
Surge Prevention Active?	STATUS		COMPRESS	
Surge Prevention Active?	STATUS		HEAT_EX	
Surge Prevention Active?	SERVICE	CONTROL ALGORITHM STATUS	SURGEPREV	
Surge Protection Counts	STATUS		COMPRESS	
Surge Protection Counts	SERVICE	CONTROL ALGORITHM STATUS	SURGEPREV	
Surge Time Period	SERVICE	EQUIPMENT SERVICE	OPTIONS	X
Surge/HGBP Deadband	SERVICE	EQUIPMENT SERVICE	OPTIONS	X
Surge/HGBP Delta Tsmax	SERVICE	EQUIPMENT SERVICE	OPTIONS	X
Surge/HGBP Delta Tsmin	SERVICE	EQUIPMENT SERVICE	OPTIONS	X
Surge/HGBP IGVmax	SERVICE	EQUIPMENT SERVICE	OPTIONS	X
Surge/HGBP IGVmin	SERVICE	EQUIPMENT SERVICE	OPTIONS	X
System Alert/Alarm	STATUS		MAINSTAT	
Target Guide Vane Pos	STATUS		COMPRESS	
Target Guide Vane Pos	SERVICE	CONTROL ALGORITHM STATUS	CAPACITY	
Target Guide Vane Pos	SERVICE	CONTROL ALGORITHM STATUS	SURGEPREV	
Target VFD Speed	STATUS		COMPRESS	
Target VFD Speed	SERVICE	CONTROL ALGORITHM STATUS	CAPACITY	
Target VFD Speed	SERVICE	CONTROL ALGORITHM STATUS	SURGEPREV	

APPENDIX A — ICVC PARAMETER INDEX (cont)

PARAMETER	MENU SOFTKEY	TABLE	SCREEN NAME	CONFIGURABLE
Temp Pulldown Ramp	SERVICE	EQUIPMENT SERVICE	TEMP_CTL	X
Temperature Reset	STATUS		MAINSTAT	
Temperature Reset	SERVICE	EQUIPMENT SERVICE	TEMP_CTL	X
Total Compressor Starts	STATUS		MAINSTAT	
Total Error + Resets	SERVICE	CONTROL ALGORITHM STATUS	CAPACITY	
Tower Fan High Setpoint	SETPOINT		SETPOINT	X
Tower Fan Relay High	STATUS		STARTUP	
Tower Fan Relay Low	STATUS		STARTUP	
UnderVoltage	STATUS		ISM_STAT	
Undervoltage Threshold	SERVICE	ISM (STARTER) CONFIG DATA	ISM_CONF	X
US Imp / Metric	SERVICE		ICVC CONFIGURATION	
VFD Current Limit	SERVICE	EQUIPMENT SERVICE	SETUP2	X
VFD Gain	SERVICE	CONTROL ALGORITHM STATUS	CAPACITY	
VFD Gain	SERVICE	EQUIPMENT SERVICE	SETUP2	X
VFD Increase Step	SERVICE	EQUIPMENT SERVICE	SETUP2	X
VFD Load Factor	SERVICE	CONTROL ALGORITHM STATUS	CAPACITY	
VFD Load Factor	SERVICE	CONTROL ALGORITHM STATUS	SURGEPREV	
VFD Maximum Speed	SERVICE	EQUIPMENT SERVICE	SETUP2	X
VFD Minimum Speed	SERVICE	EQUIPMENT SERVICE	SETUP2	X
VFD Option	SERVICE	EQUIPMENT SERVICE	SETUP2	X
VFD Rampdown Active	SERVICE	CONTROL ALGORITHM STATUS	SURGEPREV	
VFD Speed Factor	SERVICE	CONTROL ALGORITHM STATUS	SURGEPREV	
VFD Start Speed	SERVICE	EQUIPMENT SERVICE	SETUP2	X
VFD Surge Line Gain	SERVICE	EQUIPMENT SERVICE	SETUP2	X
Volt Transformer Ratio:1	SERVICE	ISM (STARTER) CONFIG DATA	ISM_CONF	X
Voltage % Imbalance	SERVICE	ISM (STARTER) CONFIG DATA	ISM_CONF	X
Voltage Imbalance	STATUS		ISM_STAT	
Voltage Imbalance Time	SERVICE	ISM (STARTER) CONFIG DATA	ISM_CONF	X
Water Flow Verify Time	SERVICE	EQUIPMENT SERVICE	SETUP1	X
Water Pump	STATUS		STARTUP	
WSM Active?	SERVICE	CONTROL ALGORITHM STATUS	WSMCHLRE	

LEGEND

CCN — Carrier Comfort Network
CHW — Chilled Water
ECW — Entering Chilled Water
HGBP — Hot Gas Bypass
ISM — Integrated Starter Module
LCW — Leaving Chilled Water
LID — Local Interface Device
LRA — Locked Rotor Amps
SRD — Split Ring Diffuser
VFD — Variable Frequency Drive
WSM — Water System Manager

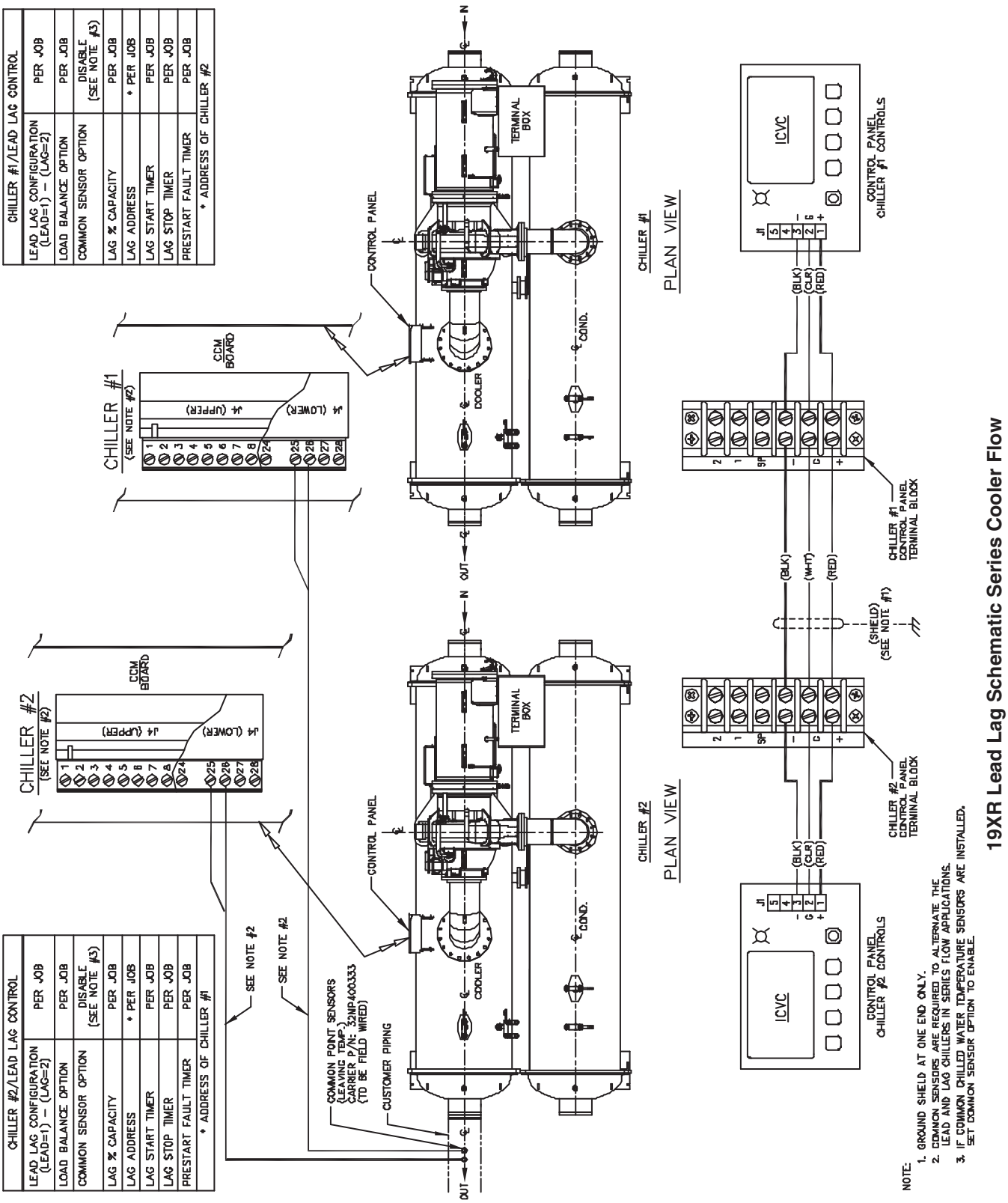

19XR Lead Lag Schematic Series Cooler Flow

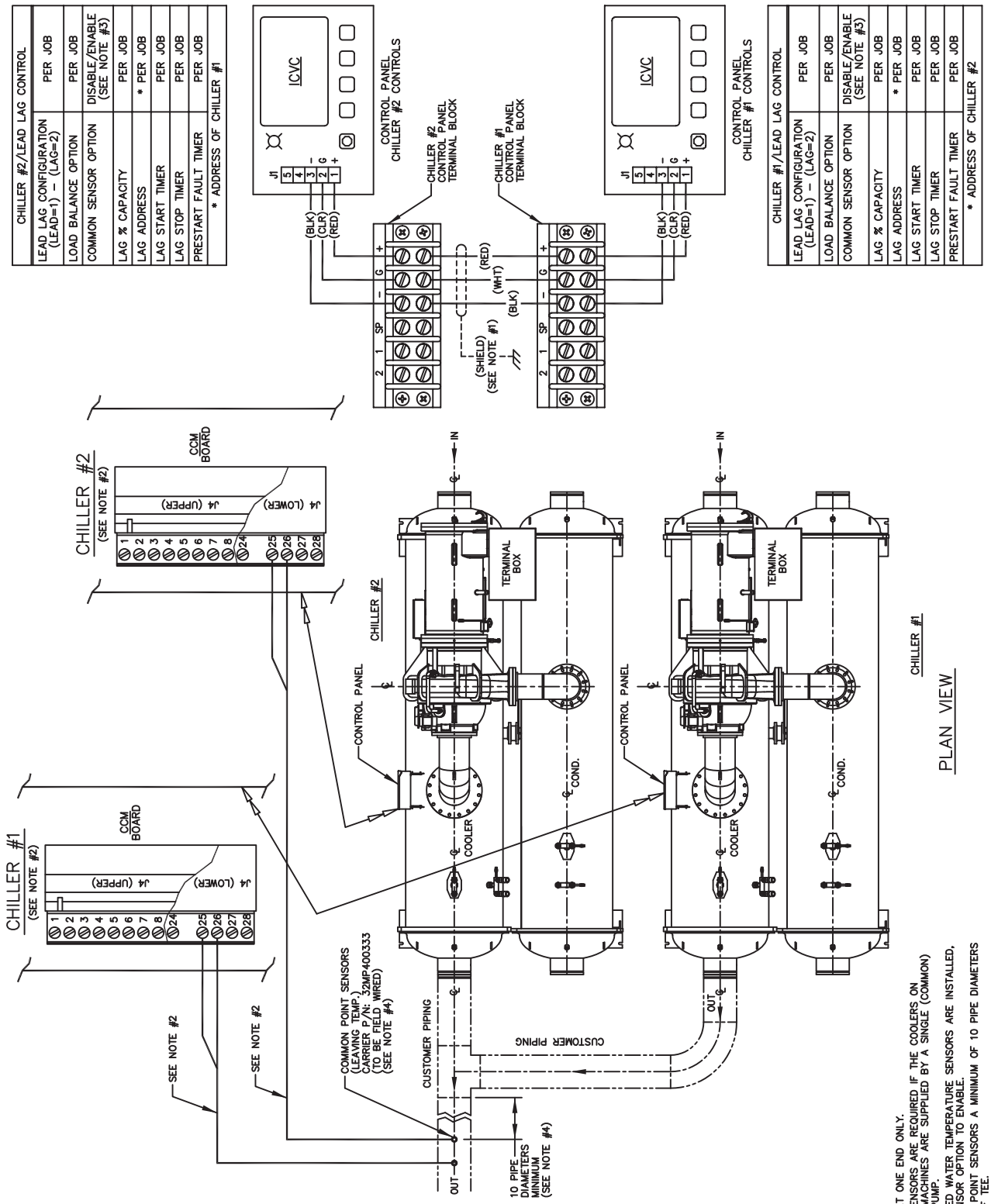

19XR Lead Lag Schematic Parallel Cooler Flow

NOTE:
1. GROUND SHIELD AT ONE END ONLY.
2. COMMON POINT SENSORS ARE REQUIRED IF THE COOLERS ON PARALLEL FLOW MACHINES ARE SUPPLIED BY A SINGLE (COMMON) CHILLED WATER PUMP.
3. IF COMMON CHILLED WATER TEMPERATURE SENSORS ARE INSTALLED, SET COMMON SENSOR OPTION TO ENABLE.
4. INSTALL COMMON POINT SENSORS A MINIMUM OF 10 PIPE DIAMETERS DOWN STREAM OF TEE.

APPENDIX C — MAINTENANCE SUMMARY AND LOG SHEETS

19XR,XRV Maintenance Interval Requirements

WEEKLY			
Compressor	Check Oil Level.	**Controls**	Review ICVC Alarm/Alert History.
Cooler	None.	**Starter**	None.
Condenser	None.	**Oil Reclaim**	None.
MONTHLY			
Compressor	None.	**Controls**	Perform an Automated Controls test.
Cooler	None.	**Starter**	None.
Condenser	None.	**Oil Reclaim**	None.
FIRST YEAR			
Compressor	Change oil filter. Send oil sample out for analysis. Change oil if required by analysis. Leak test.	**Controls**	Perform general cleaning. Tighten connections. Check pressure transducers. Confirm accuracy of thermistors.
Cooler	Inspect and clean cooler tubes. Inspect relief valves. Leak test. Verify water pressure differential. Inspect water pumps and cooling tower.	**Starter**	Perform general cleaning. Tighten connections. Change VFD refrigerant strainer.
Condenser	Replace refrigerant filter/drier. Inspect and clean condenser tubes. Inspect relief valves. Leak test. Verify water pressure differential. Inspect water pumps and cooling tower.	**Oil Reclaim**	Inspect oil sump strainer.
ANNUALLY			
Compressor	Change oil filter. Send oil sample out for analysis. Change oil if required by analysis. Leak test.	**Controls**	Perform general cleaning. Tighten connections. Check pressure transducers. Confirm accuracy of thermistors.
Cooler	Inspect and clean cooler tubes. Inspect relief valves. Leak test. Verify water pressure differential. Inspect water pumps and cooling tower.	**Starter**	Perform general cleaning. Tighten connections. Change VFD refrigerant strainer.
Condenser	Replace refrigerant filter/drier. Inspect and clean condenser tubes. Inspect relief valves. Leak test. Verify water pressure differential. Inspect water pumps and cooling tower.	**Oil Reclaim**	None.
EVERY 3-5 YEARS			
Compressor	None.	**Controls**	None.
Cooler	Perform eddy current test.	**Starter**	None.
Condenser	Inspect float valve and strainer. Perform eddy current test.	**Oil Reclaim**	None.
EVERY 5 YEARS			
Compressor	Change oil charge (if required based on oil analysis or if oil analysis has not been performed). Inspect compressor shafts and bearings (every 5-10 years).	**Controls**	None.
Cooler	None.	**Starter**	None.
Condenser	None.	**Oil Reclaim**	Inspect oil sump strainer. Inspect oil sump heater. Replace the oil reclaim filter.
SEASONAL SHUTDOWN			
Compressor	None.	**Controls**	Do not disconnect control power.
Cooler	Isolate and drain waterbox. Remove waterbox cover from one end. Use compressed air to clear tubes.	**Starter**	None.
Condenser	Isolate and drain waterbox. Remove waterbox cover from one end. Use compressed air to clear tubes.	**Oil Reclaim**	None.

NOTE: Equipment failures caused by lack of adherence to the Maintenance Interval Requirements are not covered under warranty.

APPENDIX C — MAINTENANCE SUMMARY AND LOG SHEETS

19XR,XRV Monthly Maintenance Log

Month			1	2	3	4	5	6	7	8	9	10	11	12
Date			/ /	/ /	/ /	/ /	/ /	/ /	/ /	/ /	/ /	/ /	/ /	/ /
Operator														

UNIT SECTION	ACTION	UNIT	ENTRY											
Compressor	Change Oil Charge	yes/no												
	Change Oil Filter	yes/no												
	Send Oil Sample Out for Analysis	yes/no												
	Leak Test	ppm												
	Inspect Compressor Rotors	yes/no												
	Bearing Inspection	yes/no												
Cooler	Inspect and Clean Cooler Tubes	yes/no												
	Inspect Relief Valves	yes/no												
	Leak Test	PPM												
	Record Water Pressure Differential (PSI)	PSI												
	Inspect Water Pumps	yes/no												
	Eddy Current Test	yes/no												
Condenser	Leak Test	PPM												
	Inspect and Clean Condenser Tubes	yes/no												
	Record Water Pressure Differential (PSI)	PSI												
	Inspect Water Pumps and Cooling Tower	yes/no												
	Inspect Relief Valves	yes/no												
	Replace Refrigerant Filter Drier	yes/no												
	Inspect Float Valve and Strainer	yes/no												
	Eddy Current Test	yes/no												
Controls	General Cleaning and Tightening Connections	yes/no												
	Check Pressure Transducers	yes/no												
	Confirm Accuracy of Thermistors	yes/no												
	Perform Automated Controls Test	yes/no												
Starter	General Tightening and Cleaning Connections	yes/no												
	Change VFD Refriferant Strainer	yes/no												
Oil Reclaim	Inspect Oil Sump Strainer	yes/no												
	Inspect Oil Sump Heater	yes/no												

NOTE: Equipment failures caused by lack of adherence to the Maintenance Interval Requirements are not covered under warranty.

APPENDIX C — MAINTENANCE SUMMARY AND LOG SHEETS

19XR,XRV Seasonal Shutdown Log

Month		1	2	3	4	5	6	7	8	9	10	11	12
Date		/ /	/ /	/ /	/ /	/ /	/ /	/ /	/ /	/ /	/ /	/ /	/ /
Operator													

UNIT SECTION	ACTION	ENTRY											
Cooler	Isolate and Drain Waterbox												
	Remove Waterbox Cover from One End												
	Use Compressed Air to Clean Tubes												
Condenser	Isolate and Drain Waterbox												
	Remove Waterbox Cover from One End												
	Use Compressed Air to Clean Tubes												
Controls	Do Not Disconnect Control Power												

NOTE: Equipment failures caused by lack of adherence to the Maintenance Interval Requirements are not covered under warranty.

APPENDIX D — BACNET COMMUNICATION OPTION

The following section is used to configure the UPC Open controller which is used when the BACnet* communication option is selected. The UPC Open controller is mounted in a separate enclosure below the main control box.

TO ADDRESS THE UPC OPEN CONTROLLER — The user must give the UPC Open controller an address that is unique on the BACnet network. Perform the following procedure to assign an address:

1. If the UPC Open controller is powered, pull the screw terminal connector from the controller's power terminals labeled Gnd and HOT. The controller reads the address each time power is applied to it.
2. Using the rotary switches (see Fig. A and B), set the controller's address. Set the Tens (10's) switch to the tens digit of the address, and set the Ones (1's) switch to the ones digit.

As an example in Fig. B, if the controller's address is 25, point the arrow on the Tens (10's) switch to 2 and the arrow on the Ones (1's) switch to 5.

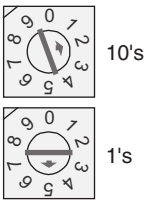

Fig. B — Address Rotary Switches

BACNET DEVICE INSTANCE ADDRESS — The UPC Open controller also has a BACnet Device Instance address. This Device Instance MUST be unique for the complete BACnet system in which the UPC Open controller is installed. The Device Instance is auto generated by default and is derived by adding the MAC address to the end of the Network Number. The Network Number of a new UPC Open controller is 16101, but it can be changed using i-Vu® Tools or BACView device. By default, a MAC address of 20 will result in a Device Instance of 16101 + 20 which would be a Device Instance of 1610120.

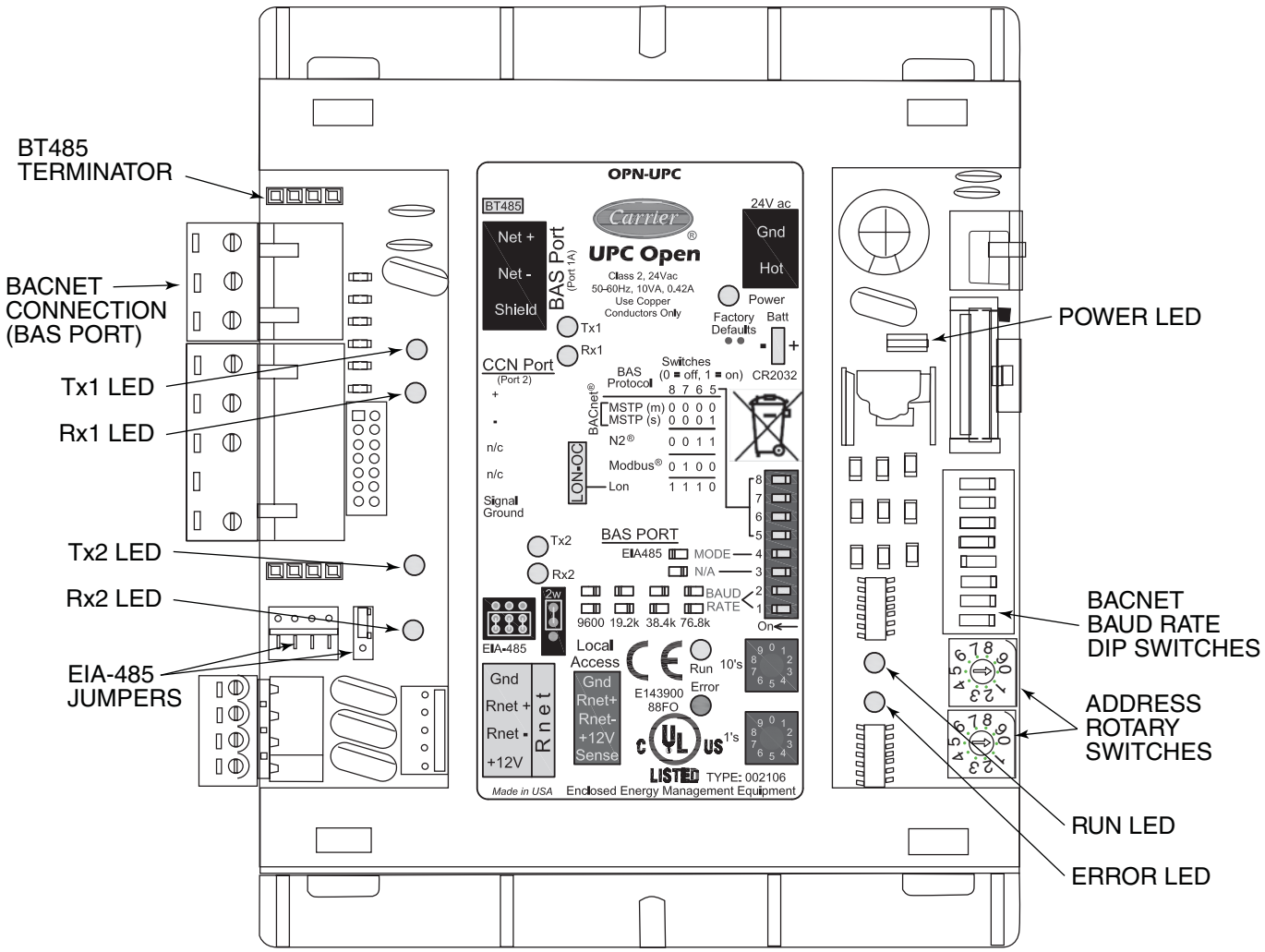

Fig. A — UPC Open Controller

* Sponsored by ASHRAE (American Society of Heating, Refrigerating and Air-Conditioning Engineers).

CONFIGURING THE BAS PORT FOR BACNET MS/TP — Use the same baud rate and communication settings for all controllers on the network segment. The UPC Open controller is fixed at 8 data bits, No Parity, and 1 Stop bit for this protocol's communications.

If the UPC Open controller has been wired for power, pull the screw terminal connector from the controller's power terminals labeled Gnd and HOT. The controller reads the DIP Switches and jumpers each time power is applied to it.

Set the BAS Port DIP switch DS3 to "enable." Set the BAS Port DIP switch DS4 to "E1-485." Set the BMS Protocol DIP switches DS8 through DS5 to "MSTP." See Table A.

Table A — SW3 Protocol Switch Settings for MS/TP

DS8	DS7	DS6	DS5	DS4	DS3
Off	Off	Off	Off	On	Off

Verify that the EIA-485 jumpers below the CCN Port are set to EIA-485 and 2W.

The example in Fig. C shows the BAS Port DIP Switches set for 76.8k (Carrier default) and MS/TP.

Set the BAS Port DIP Switches DS2 and DS1 for the appropriate communications speed of the MS/TP network (9600, 19.2k, 38.4k, or 76.8k bps). See Fig. C and Table B.

Table B — Baud Selection Table

BAUD RATE	DS2	DS1
9,600	Off	Off
19,200	On	Off
38,400	Off	On
76,800	On	On

WIRING THE UPC OPEN CONTROLLER TO THE MS/TP NETWORK — The UPC Open controller communicates using BACnet on an MS/TP network segment communications at 9600 bps, 19.2 kbps, 38.4 kbps, or 76.8 kbps.

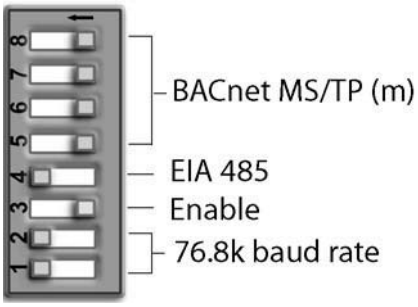

Fig. C — DIP Switches

Wire the controllers on an MS/TP network segment in a daisy-chain configuration. Wire specifications for the cable are 22 AWG (American Wire Gage) or 24 AWG, low-capacitance, twisted, stranded, shielded copper wire. The maximum length is 2000 ft.

Install a BT485 terminator on the first and last controller on a network segment to add bias and prevent signal distortions due to echoing. See Fig. A, D, and E.

To wire the UPC Open controller to the BAS network:

1. Pull the screw terminal connector from the controller's BAS Port.
2. Check the communications wiring for shorts and grounds.
3. Connect the communications wiring to the BAS port's screw terminals labeled Net +, Net -, and Shield.

NOTE: Use the same polarity throughout the network segment.

4. Insert the power screw terminal connector into the UPC Open controller's power terminals if they are not currently connected.
5. Verify communication with the network by viewing a module status report. To perform a module status report using the BACview keypad/display unit, press and hold the "FN" key then press the "." Key.

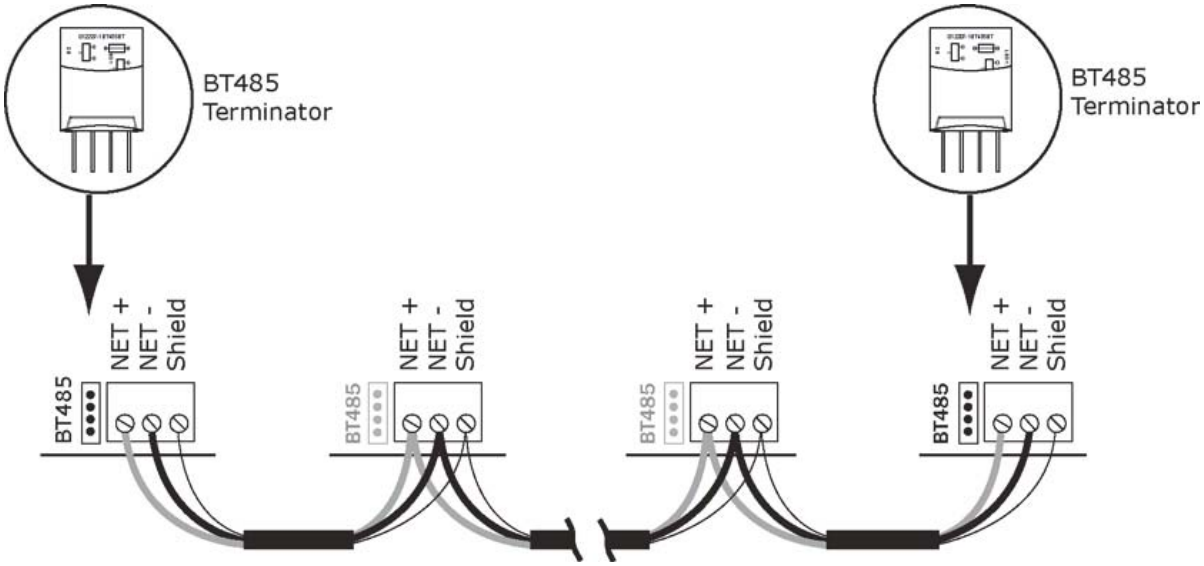

Fig. D — Network Wiring

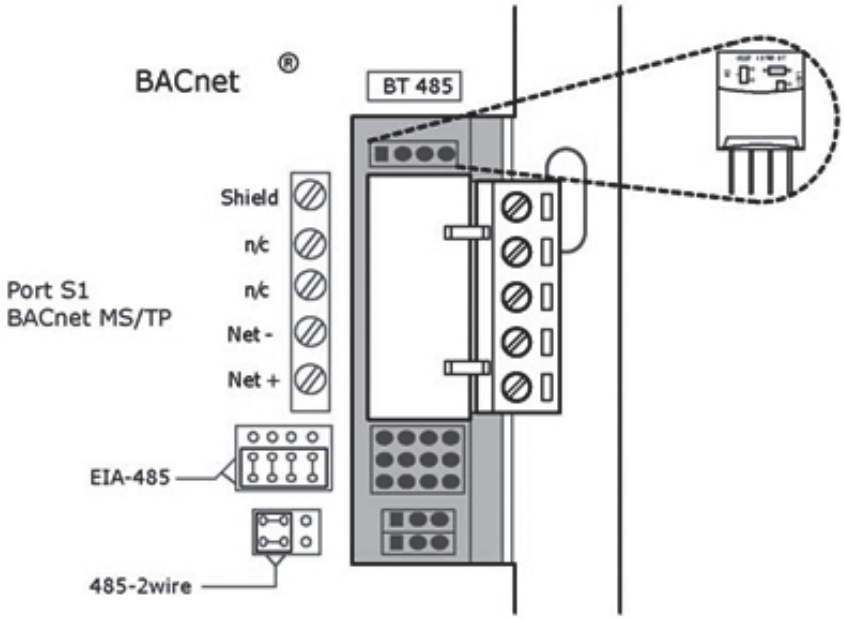

Fig. E — BT485 Terminator Installation

To install a BT485 terminator, push the BT485 terminator on to the BT485 connector located near the BACnet connector.

NOTE: The BT485 terminator has no polarity associated with it.

To order a BT485 terminator, consult Commercial Products i-Vu® Open Control System Master Prices.

MS/TP WIRING RECOMMENDATIONS — Recommendations are shown in Tables C and D. The wire jacket and UL temperature rating specifications list two acceptable alternatives. The Halar specification has a higher temperature rating and a tougher outer jacket than the SmokeGard specification, and it is appropriate for use in applications where the user is concerned about abrasion. The Halar jacket is also less likely to crack in extremely low temperatures.

NOTE: Use the specified type of wire and cable for maximum signal integrity.

Table C — MS/TP Wiring Recommendations

SPECIFICATION	RECOMMMENDATION
Cable	Single twisted pair, low capacitance, CL2P, 22 AWG (7x30), TC foam FEP, plenum rated cable
Conductor	22 or 24 AWG stranded copper (tin plated)
Insulation	Foamed FEP 0.015 in. (0.381 mm) wall 0.060 in. (1.524 mm) O.D.
Color Code	Black/White
Twist Lay	2 in. (50.8 mm) lay on pair 6 twists/foot (20 twists/meter) nominal
Shielding	Aluminum/Mylar shield with 24 AWG TC drain wire
Jacket	SmokeGard Jacket (SmokeGard PVC) 0.021 in. (0.5334 mm) wall 0.175 in. (4.445 mm) O.D. Halar Jacket (E-CTFE) 0.010 in. (0.254 mm) wall 0.144 in. (3.6576 mm) O.D.
DC Resistance	15.2 Ohms/1000 feet (50 Ohms/km) nominal
Capacitance	12.5 pF/ft (41 pF/meter) nominal conductor to conductor
Characteristic Impedance	100 Ohms nominal
Weight	12 lb/1000 feet (17.9 kg/km)
UL Temperature Rating	SmokeGard 167°F (75°C) Halar -40 to 302°F (-40 to 150°C)
Voltage	300 Vac, power limited
Listing	UL: NEC CL2P, or better

LEGEND

AWG — American Wire Gage
CL2P — Class 2 Plenum Cable
DC — Direct Current
FEP — Fluorinated Ethylene Polymer
NEC — National Electrical Code
O.D. — Outside Diameter
TC — Tinned Copper
UL — Underwriters Laboratories

Table D — Open System Wiring Specifications and Recommended Vendors

WIRING SPECIFICATIONS		RECOMMENDED VENDORS AND PART NUMBERS			
Wire Type	Description	Connect Air International	Belden	RMCORP	Contractors Wire and Cable
MS/TP Network (RS-485)	22 AWG, single twisted shielded pair, low capacitance, CL2P, TC foam FEP, plenum rated. See MS/TP Installation Guide for specifications.	W221P-22227	—	25160PV	CLP0520LC
	24 AWG, single twisted shielded pair, low capacitance, CL2P, TC foam FEP, plenum rated. See MS/TP Installation Guide for specifications.	W241P-2000F	82841	25120-OR	—
Rnet	4 conductor, unshielded, CMP, 18 AWG, plenum rated.	W184C-2099BLB	6302UE	21450	CLP0442

LEGEND

AWG — American Wire Gage
CL2P — Class 2 Plenum Cable
CMP — Communications Plenum Rated
FEP — Fluorinated Ethylene Polymer
TC — Tinned Copper

LOCAL ACCESS TO THE UPC OPEN CONTROLLER — The user can use a BACview6 handheld keypad display unit or the Virtual BACview software as a local user interface to an Open controller. These items let the user access the controller network information. These are accessory items and do not come with the UPC Open controller.

The BACview6 unit connects to the local access port on the UPC Open controller. See Fig. F. The BACview software must be running on a laptop computer that is connected to the local access port on the UPC Open controller. The laptop will require an additional USB link cable for connection.

See the *BACview Installation and User Guide* for instructions on connecting and using the BACview6 device.

To order a BACview6 Handheld (BV6H), consult Commercial Products i-Vu® Open Control System Master Prices.

CONFIGURING THE UPC OPEN CONTROLLER'S PROPERTIES — The UPC Open device and *Comfort*Link control must be set to the same CCN Address (Element) number and CCN Bus number. The factory default settings for CCN Element and CCN Bus number are 1 and 0 respectively.

If modifications to the default Element and Bus number are required, both the *Comfort*Link and UPC Open configurations must be changed.

The following configurations are used to set the CCN Address and Bus number in the *Comfort*Link control. These configurations can be changed using the scrolling marquee display or accessory Navigator™ handheld device.

Configuration→CCN→CCN.A (CCN Address)

Configuration→CCN→CCN.B (CCN Bus Number)

The following configurations are used to set the CCN Address and Bus Number in the UPC Open controller. These configurations can be changed using the accessory BACview6 display.

Navigation: BACview→CCN
Home: Element Comm Stat
Element: 1
Bus: 0

TROUBLESHOOTING — If there are problems wiring or addressing the UPC Open controller, contact Carrier Technical Support.

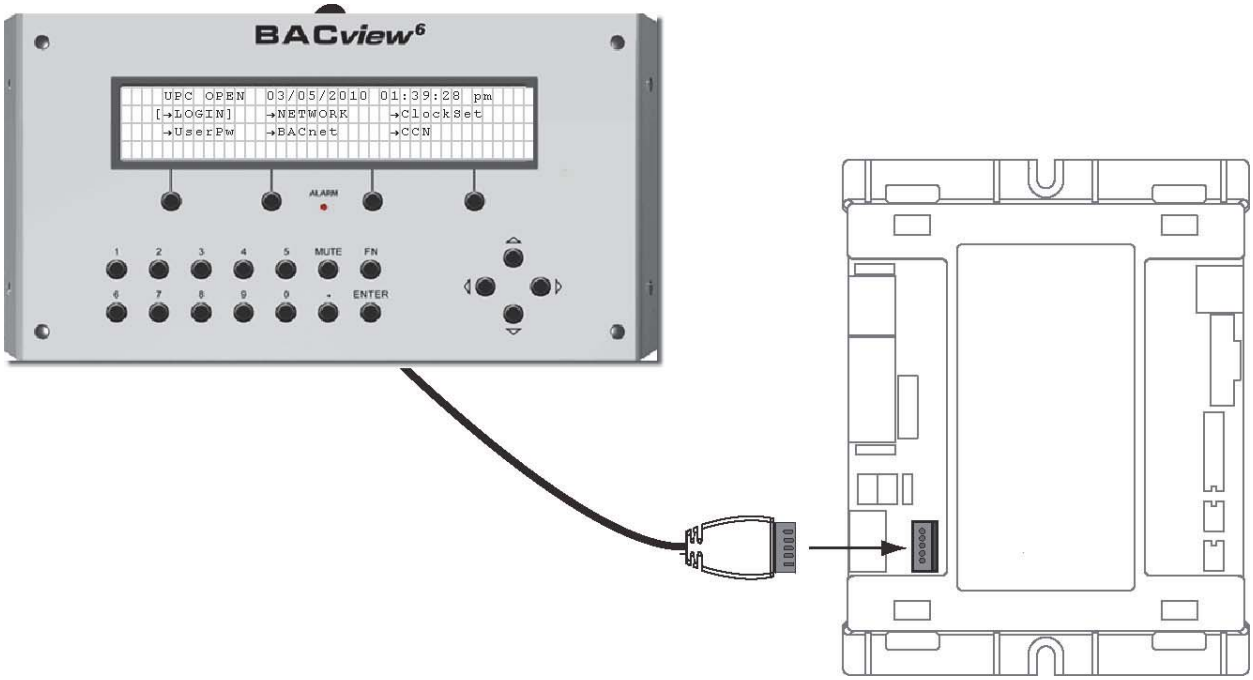

Fig. F — BACview6 Device Connection

COMMUNICATION LEDS — The LEDs indicate if the controller is communicating with the devices on the network. See Tables E and F. The LEDs should reflect communication traffic based on the baud rate set. The higher the baud rate the more solid the LEDs become. See Fig. A for location of LEDs on UPC Open module.

REPLACING THE UPC OPEN BATTERY — The UPC Open controller's 10-year lithium CR2032 battery provides a minimum of 10,000 hours of data retention during power outages.

IMPORTANT: Power must be **ON** to the UPC Open when replacing the battery, or the date, time, and trend data will be lost.

Remove the battery from the controller, making note of the battery's polarity. Insert the new battery, matching the battery's polarity with the polarity indicated on the UPC Open controller.

NETWORK POINTS LIST — The points list for the controller is shown in Table G.

Table E — LED Status Indicators

LED	STATUS
Power	Lights when power is being supplied to the controller. The UPC Open controller is protected by internal solid-state polyswitches on the incoming power and network connections. These polyswitches are not replaceable and will reset themselves if the condition that caused the fault returns to normal.
Rx	Lights when the controller receives data from the network segment; there is an Rx LED for Ports 1 and 2.
Tx	Lights when the controller transmits data to the network segment; there is an Tx LED for Ports 1 and 2.
Run	Lights based on controller status. See Table F.
Error	Lights based on controller status. See Table F.

Table F — Run and Error LEDs Controller and Network Status Indication

RUN LED	ERROR LED	STATUS
2 flashes per second	Off	Normal
2 flashes per second	2 flashes, alternating with **Run** LED	Five minute auto-restart delay after system error
2 flashes per second	3 flashes, then off	Controller has just been formatted
2 flashes per second	1 flash per second	Controller is alone on the network
2 flashes per second	On	Exec halted after frequent system errors or control programs halted
5 flashes per second	On	Exec start-up aborted, Boot is running
5 flashes per second	Off	Firmware transfer in progress, Boot is running
7 flashes per second	7 flashes per second, alternating with **Run** LED	Ten second recovery period after brownout
14 flashes per second	14 flashes per second, alternating with **Run** LED	Brownout

Table G — UPC Open Points List for Version 11 19XR Software

POINT DESCRIPTION	CCN POINT NAME	READ/ WRITE	UNITS	RANGE	BACNET OBJECT ID	BACNET OBJECT NAME
Active Demand Limit	DEM_LIM	R/W	%	40 to 100	AV:6	dem_lim_1
Actual Guide Vane Position	GV_POS	R	%		AV:7	gv_pos_1
Actual Line Current	AMP_A	R	A		AV:8	amps_a_1
Actual Line Voltage	VOLT_A	R	V		AV:9	volt_a_1
Actual VFD Speed	VFD_ACT	R	%		AV:11	vfd_act_1
Calc Evap Sat Temp	ERT	R	°F		AV:13	ert_1
Chilled Water Deadband	CWDB	R	^F		AV:14	cwdb_1
Chilled Water Delta P	CHWPD	R	^F		AV:15	chwpd_1
Chilled Water Delta T	CHW_DT	R	^F		AV:16	chw_dt_1
Chilled Water Pump	CHWP	R			BV:4	chwp_1
Chilled Water Temp	CHW_TMP	R	°F		AV:17	chw_tmp_1
Chiller S/S	CHIL_S_S	R/W		STOP/START	BV:5	chil_s_s_1
Comp Discharge Temp	CMPD	R	°F		AV:18	cmpd_1
Comp Motor Winding Temp	MTRW	R	°F		AV:19	mtrw_1
Comp Thrust Brg Temp	MTRB	R	°F		AV:20	mtrb_1
Condenser Pressure	CRP	R	PSI		AV:21	crp_1
Condenser Refrig Temp	CRT	R	°F		AV:22	crt_1
Condenser Water Delta P	CDWPD	R	PSI		AV:23	cdwpd_1
Control Point	LCW_STPT	R/W	°F	-10 to 120	AV:24	lcw_stpt_1
Cond Water Flow	CDW_FLOW	R			BV:6	cdw_flow_1
Cond Water Pump	CDP	R			BV:7	cdp_1
Current CHW Setpoint	CHWSTPT	R	°F		AV:25	chwstpt_1
Demand Level 1	N/A	R	%		AV:1	dmv_lvl_1_perct_1
Demand Level 2	N/A	R	%		AV:2	dmv_lvl_2_perct_1
Demand Level 3	N/A	R	%		AV:3	dmv_lvl_3_perct_1
Element Communications Alarm	N/A	R			BV:20	comm_lost_alm_1
Element Comm Status	N/A	R			BV:2999	element_stat_1
Emergency Stop	EMSTOP	R			BV:8	emstop_1
Entering Chilled Water	ECW	R	°F		AV:26	ecw_1
Entering Condenser Water	ECDW	R	°F		AV:27	ecdw_1
Equipment Alarm	N/A	R			BV:21	element_alarm_1
Evaporator Pressure	ERP	R	PSI		AV:28	erp_1
Frequency	FREQ	R	Hz		AV:30	freq_1
Hardware Failure	HARDWARE	R			BV:9	hardware_1
Leaving Chilled Water - Prime Variable	LCW	R	°F		AV:31	lcw_1
Leaving Condenser Water	LCDW	R	°F		AV:32	lcdw_1
Local Schedule	N/A	R			BV:2	schedule_1
Occupied?	OCC	R			BV:10	occ_1
Oil Sump Temperature	OILT	R	°F		AV:33	oilt_1
Overload Trip	OVERLOAD	R			BV:12	overload_1
Power Factor	POW_FACT	R			AV:34	pow_fact_1
Remote Start Contact	REMCON	R/W		OPEN/CLOSE	BV:11	remcon_1
Run Status	STATUS	R		0=Timeout 1=Ready 2=Recyle 3=Startup 4=Running 5=Demand 6=Ramping 7=not used 8=Override 9=Tripout 10=Control	AV:35	status_1
Service Ontime	S_HRS	R/W	hr	0 to 32767	AV:36	s_hrs_1

LEGEND

CHW — Chilled Water
R — Read
VFD — Variable Frequency Drive
W — Write

Table G — UPC Open Points List for Version 11 19XR Software (cont)

POINT DESCRIPTION	CCN POINT NAME	READ/ WRITE	UNITS	RANGE	BACNET OBJECT ID	BACNET OBJECT NAME
System Alert/Alarm	SYS_ALM	R		1=Normal 2=Alert 3=Alarm	AV:40	sys_alm_1
System Cooling Demand Level	N/A	R			AV:9006	cool_demand_level_1
System Demand Limiting	N/A	R			BV:3	dem_lmt_act_1
Target Guide Vane Position	GV_TRG	R	%		AV:41	gv_trg_1
Target VFD Speed	VFD_OUT	R	%		AV:42	vfd_out_1
Twr Fan Relay High	TFR_LOW	R			BV:13	tfr_high_1
Twr Fan Relay Low	TFR_HIGH	R			BV:14	tfr_low_1
User Defined Analog 1	N/A	R			AV:2901	user_analog_1_1
User Defined Analog 2	N/A	R			AV:2902	user_analog_2_1
User Defined Analog 3	N/A	R			AV:2903	user_analog_3_1
User Defined Analog 4	N/A	R			AV:2904	user_analog_4_1
User Defined Analog 5	N/A	R			AV:2905	user_analog_5_1
User Defined Binary 1	N/A	R			BV:2911	user_binary_1_1
User Defined Binary 2	N/A	R			BV:2912	user_binary_2_1
User Defined Binary 3	N/A	R			BV:2913	user_binary_3_1
User Defined Binary 4	N/A	R			BV:2914	user_binary_4_1
User Defined Binary 5	N/A	R			BV:2915	user_binary_5_1

LEGEND

CHW — Chilled Water
R — Read
VFD — Variable Frequency Drive
W — Write

INDEX

Abbreviations and Explanations, *5*
Accidental Start-Up (Prevent), *85*
Adding Refrigerant, *92*
Adjusting the Refrigerant Charge, *92*
After Extended Shutdown, *86*
After Limited Shutdown, *86*
Alarm (Trip) Output Contacts, *53*
Attach to Network Device Control, *61*
Automatic Soft Stop Amps Threshold, *65*
Auto. Restart After Power Failure, *54*
BACnet Communication Option, *189-195*
Bearings, *13*
Before Initial Start-Up, *66-84*
Capacity Override, *51*
Carrier Comfort Network Interface, *71*
Changing Oil Filter, *94*
Charge Refrigerant Into Chiller, *82*
Chilled Water Recycle Mode, *65*
Chiller Control Module (CCM), *115*
Chiller Dehydration, *70*
Chiller Familiarization, *5-9*
Chiller Information Nameplate, *5*
Chiller Operating Condition (Check), *85*
Chiller Tightness (Check), *66*
Cold Weather Operation, *86*
Compressor Bearing and Gear Maintenance, *95*
Compressor Bearing Temperature, *51*
Condenser, *7*
Condenser Freeze Prevention, *54*
Condenser Pump Control, *53*
Control Algorithms Checkout Procedure, *115*
Control Panel, *7*
Control Modules, *115*
Control Test, *80, 115*
Controls, *17-63*
Cooler, *7*
Default Screen Freeze, *50*
Definitions (Controls), *17*
Demand Limit Control Option, *55*
Design Set Points, (Input), *73*
Display Messages (Check), *97*
Dry Run to Test Start-Up Sequence, *84*
Economizer (option), *7*
Equipment Required, *66*
Evaporator Freeze Protection, *54*
Extended Shutdown (Preparation for), *86*
Factory-Mounted Starter or Variable Frequency Drive, *7*
Fast Power Source Transfer, *55*
Function Loss Trip, *47*
Guide Vane Linkage (Check), *92*
Head Pressure Reference Output, *57*
Heat Exchanger Tubes and Flow Devices (Inspect), *96*
High Altitude Locations, *82*
High Discharge Temperature Control, *51*
Hot Gas bypass Algorithm, *55*
Ice Build Control, *60*
ICVC Operation and Menus, *20*
ICVC Parameter Index, *117-183*
Initial Start-Up, *84-86*
Initial Start-Up Checklist for 19XR,XRV Hermetic Centrifugal Liquid Chiller, *CL-1 to CL-14*
Inspect the Control Panel, *93*
Instruct the Customer Operator, *85*
Integrated Starter Module (ISM), *115*
Introduction, *5*
Job Data Required, *66*
Kilowatt Output, *53*
Lead/Lag Control, *58*
Lead/Lag Wiring, *184, 185*
Leak Rate, *92*
Leak Test Chiller, *67*
Local Occupied Schedule (Input), *73*
Local Start-Up, *63*
Lubrication Cycle, *12-14*
Lubrication System (Check), *93*
Maintenance, *92-97*
Maintenance Summary and Log Sheets, *186-188*
Manual Guide Vane Operation, *87*
Motor and Oil Cooling Cycle, *11*
Motor-Compressor, *7*
Motor Rotation (Check), *85*
Notes on Module Operation, *115*
Oil Changes, *94*
Oil Charge, *72*
Oil Cooler, *53*
Oil Pressure and Compressor Stop (Check), *85*
Oil Reclaim Filter, *94*
Oil Reclaim System, *13*
Oil Specification, *94*
Oil Sump Temperature and Pump Control, *51*
Open Oil Circuit Valves, *66*
Operating Instructions, *86, 87*
Operating the Optional Pumpout Unit, *89*
Operator Duties, *86*
Optional Pumpout Compressor Water Piping (Check), *71*
Optional Pumpout System Controls and Compressor (Check), *82*
Optional Pumpout System Maintenance, *96*
Optional Storage Tank and Pumpout System, *66*
Ordering Replacement Chiller Parts, *97*
Overview (Troubleshooting Guide), *97*
Physical Data, *119*
PIC II System Components, *17*
PIC II System Functions, *42*
Power Up the Controls and Check the Oil Heater, *72*
Prepare the Chiller for Start-Up, *86*
Pressure Transducers (Check), *114*
Pressure Transducers (Recalibrate), *96*
Prevent Accidental Start-Up, *85*
Pump and Fan Control, *47*
Pumpout and Refrigerant Transfer Procedures, *87-92*
Rampdown, *51*
Ramp Loading, *51*
Refrigerant Filter, *94*
Refrigerant Float System (Inspect), *94*
Refrigerant Leak Detector, *53*
Refrigerant Leak Testing, *92*
Refrigerant Properties, *92*
Refrigerant Tracer, *66*
Refrigeration Cycle, *10, 11*
Refrigeration Log, *87*
Relief Valves (Check), *71*
Relief Valves and Piping (Inspect), *95*
Remote Reset of Alarms, *53*
Remote Start/Stop Controls, *53*
Repair the Leak, Retest, and Apply Standing Vacuum Test, *92*
Replacing Defective Processor Modules, *118*
Running System (Check), *86*
Safety and Operating Controls (Check Monthly), *94*
Safety Considerations, *1, 2*
Safety Controls, *47*
Safety Shutdown, *66*
Scheduled Maintenance, *93-97*
Service Configurations (Input), *73*
Service Ontime, *93*
Service Operation, *62*
Shipping Packaging (Remove), *66*
Shunt Trip (Option), *47*
Shutdown Sequence, *65*
Software Configuration, *73*
Solid-State Starters, *118*
Spare Safety Inputs and Spare Temperature Inputs, *53*
Standing Vacuum Test, *70*
Starter (Check), *72*
Starting Equipment, *14-17*
Starting Equipment (Inspect), *96*
Start-Up (Initial), *84-86*
Start-Up/Shutdown/Recycle Sequence, *63-66*
Start the Chiller, *86*
Stop the Chiller, *86*
Storage Vessel, *7*
Surge Prevention Algorithm with VFD, *56*
Surge Prevention - Constant Flow and Variable Primary Flow (VPF), *55*
Surge Protection (Fixed Speed Chillers), *56*
Surge Protection (VFD Chiller), *57*
System Components, *5*
Temperature Sensors (Check), *97*
Test After Service, Repair, or Major Leak, *92*
Tighten All Gasketed Joints and Guide Vane Shaft Packing, *66*
Tower Fan Relay Low and High, *54*
Trim Refrigerant Charge, *93*
Troubleshooting Guide, *97-176*
Unit-Mounted Solid-State Starter, *14*
Unit-Mounted VFD, *16*
Unit-Mounted Wye-Delta Starter, *16*
VFD Cooling Cycle, *12*
VFD Field Set Up and Verification, *74*
VFD Start-Up Speed Control, *57*
Water/Brine Reset, *55*
Water Leaks, *96*
Water Piping (Inspect), *70*
Water Treatment, *96*
Weekly Maintenance, *93*
Wiring (Inspect), *71*

© Carrier Corporation 2013

INITIAL START-UP CHECKLIST
FOR 19XR, XRV HERMETIC CENTRIFUGAL LIQUID CHILLER
(Remove and use for job file.)

MACHINE INFORMATION:

NAME _____ JOB NO. _____

ADDRESS _____ MODEL _____

CITY _____ STATE _____ ZIP _____ S/N _____

DESIGN CONDITIONS:

	TONS	BRINE	FLOW RATE	TEMPERATURE IN	TEMPERATURE OUT	PRESSURE DROP	PASS	SUCTION TEMPERATURE	CONDENSER TEMPERATURE
COOLER									******
CONDENSER								******	

COMPRESSOR: Volts _____ RLA _____ OLTA _____

STARTER: Mfg _____ Type _____ S/N _____

OIL PUMP: Volts _____ RLA _____ OLTA _____

CONTROL/OIL HEATER: Volts ☐ 115 ☐ 230

REFRIGERANT: Type: _____ Charge _____

CARRIER OBLIGATIONS:

Assemble... . . . . Yes ☐ No ☐

Leak Test . . . . . Yes ☐ No ☐

Dehydrate . . . . . Yes ☐ No ☐

Charging . . . . . Yes ☐ No ☐

Operating Instructions _____ Hrs.

START-UP TO BE PERFORMED IN ACCORDANCE WITH APPROPRIATE MACHINE START-UP INSTRUCTIONS

JOB DATA REQUIRED:

1. Machine Installation Instructions . . . . . Yes ☐ No ☐
2. Machine Assembly, Wiring and Piping Diagrams . . . . . Yes ☐ No ☐
3. Starting Equipment Details and Wiring Diagrams. . . . . Yes ☐ No ☐
4. Applicable Design Data (see above). . . . . Yes ☐ No ☐
5. Diagrams and Instructions for Special Controls . . . . . Yes ☐ No ☐

INITIAL MACHINE PRESSURE: _____

	YES	NO
Was Machine Tight?		
If Not, Were Leaks Corrected?		
Was Machine Dehydrated After Repairs?		

CHECK OIL LEVEL AND RECORD:

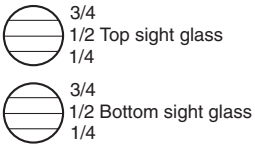

ADD OIL: Yes ☐ No ☐

Amount: _____

RECORD PRESSURE DROPS: Cooler _____ Condenser _____

CHARGE REFRIGERANT: Initial Charge _____ Final Charge After Trim _____

Manufacturer reserves the right to discontinue, or change at any time, specifications or designs without notice and without incurring obligations.

INSPECT WIRING AND RECORD ELECTRICAL DATA:
RATINGS:

Motor Voltage _____ Motor(s) Amps _____ Oil Pump Voltage _____ Starter LRA Rating _____

Line Voltages: Motor _____ Oil Pump _____ Controls/Oil Heater _____

CONTROLS: SAFETY, OPERATING, ETC.

Perform Controls Test (Yes/No) _____

CAUTION
COMPRESSOR MOTOR AND CONTROL PANEL **MUST** BE PROPERLY AND INDIVIDUALLY CONNECTED BACK TO THE EARTH GROUND IN THE STARTER (IN ACCORDANCE WITH CERTIFIED DRAWINGS).

Yes ____

WATER/BRINE PUMP CONTROL: Can the Carrier controls independently start the pumps?

	Condenser Water Pump	Yes ☐	No ☐
	Chilled Water Pump	Yes ☐	No ☐
RUN MACHINE:	Do these safeties shut down machine?		
	Condenser Water Flow	Yes ☐	No ☐
	Chilled Water Flow	Yes ☐	No ☐
	Pump Interlocks	Yes ☐	No ☐

INITIAL START:

Line Up All Valves in Accordance With Instruction Manual: _____

Start Water Pumps and Establish Water Flow _____

Oil Level OK and Oil Temperature OK _____ Check Oil Pump Rotation-Pressure _____

Check Compressor Motor Rotation (Motor End Sight Glass) and Record: Clockwise _____

Restart Compressor, Bring Up To Speed. Shut Down. Any Abnormal Coastdown Noise? Yes* ☐ No ☐

*If yes, determine cause.

START MACHINE AND OPERATE. COMPLETE THE FOLLOWING:

A: Trim charge and record under Charge Refrigerant section.
B: Complete any remaining control calibration and record under Controls section.
C: Take at least two sets of operational log readings and record.
D: After machine has been successfully run and set up, shut down and mark shutdown oil and refrigerant levels.
E: Give operating instructions to owner's operating personnel. Hours Given: _____ Hours
F: Call your Carrier factory representative to report chiller start-up.

SIGNATURES:

CARRIER TECHNICIAN _____

CUSTOMER REPRESENTATIVE _____

DATE _____

DATE _____

CUT ALONG DOTTED LINE

CUT ALONG DOTTED LINE

19XR, XRV PIC II SETPOINT TABLE CONFIGURATION SHEET

DESCRIPTION	RANGE	UNITS	DEFAULT	VALUE
Base Demand Limit	40 to 100	%	100	
LCW Setpoint	10 to 120 -9.4 to 48.9	DEG F DEG C	50.0 10.0	
ECW Setpoint	15 to 120 -12.2 to 48.9	DEG F DEG C	60.0 15.6	
Ice Build Setpoint	15 to 60 -9.4 to 15.6	DEG F DEG C	40.0 4.4	
Tower Fan High Setpoint	55 to 105 13 to 41	DEG F DEG C	75 24	

ICVC Software Version Number: _____

ICVC Controller Identification: BUS: _____ ADDRESS: _____

19XR, XRV PIC II TIME SCHEDULE CONFIGURATION SHEET OCCPC01S

	Day Flag									Occupied Time					Unoccupied Time			
	M	T	W	T	F	S	S	H										
Period 1:																		
Period 2:																		
Period 3:																		
Period 4:																		
Period 5:																		
Period 6:																		
Period 7:																		
Period 8:																		

NOTE: Default setting is OCCUPIED 24 hours/day.

ICE BUILD 19XR, XRV PIC II TIME SCHEDULE CONFIGURATION SHEET OCCPC02S

	Day Flag									Occupied Time					Unoccupied Time			
	M	T	W	T	F	S	S	H										
Period 1:																		
Period 2:																		
Period 3:																		
Period 4:																		
Period 5:																		
Period 6:																		
Period 7:																		
Period 8:																		

NOTE: Default setting is UNOCCUPIED 24 hours/day.

19XR, XRV PIC II TIME SCHEDULE CONFIGURATION SHEET OCCPC03S

	Day Flag									Occupied Time					Unoccupied Time			
	M	T	W	T	F	S	S	H										
Period 1:																		
Period 2:																		
Period 3:																		
Period 4:																		
Period 5:																		
Period 6:																		
Period 7:																		
Period 8:																		

NOTE: Default setting is OCCUPIED 24 hours/day.

CUT ALONG DOTTED LINE

CUT ALONG DOTTED LINE

19XR, XRV PIC II ISM_CONF TABLE CONFIGURATION SHEET

DESCRIPTION	RANGE	UNITS	DEFAULT	VALUE
Starter Type (0=Full, 1=Red, 2=SS/VFD, 3=VFD)	0 to 3		1	
Motor Rated Line Voltage	200 to 13200	VOLTS	460	
Volt Transformer Ratio: 1	1 to 115		1	
Overvoltage Threshold	105 to 115	%	115	
Undervoltage Threshold	85 to 95	%	85	
Over/Under Volt Time	1 to 10	SEC	5	
Voltage% Imbalance	1 to 10	%	10	
Voltage Imbalance Time	1 to 10	SEC	5	
Motor Rated Load Amps	10 to 5000	AMPS	200	
Motor Locked Rotor Trip	100 to 60000	AMPS	1000	
Locked Rotor Start Delay	1 to 10	cycles	5	
Starter LRA Rating	100 to 60000	AMPS	2000	
Motor Current CT Ratio: 1	10 to 1000		100	
Current% Imbalance	5 to 40	%	15	
Current Imbalance Time	1 to 10	SEC	5	
Grnd Fault CT's?	0/1	NO/YES	YES	
Ground Fault CT Ratio: 1	150		150	
Ground Fault Current	1 to 25	AMPS	15	
Ground Fault Start Delay	1 to 20	cycles	10	
Ground Fault Persistence	1 to 10	cycles	5	
Single Cycle Dropout	0/1	DSABLE/ENABLE	DSABLE	
Frequency-60 Hz? (No=50)	0/1	NO/YES	YES	
Line Frequency Faulting	0/1	DSABLE/ENABLE	DSABLE	

19XR, XRV PIC II OPTIONS TABLE CONFIGURATION SHEET

DESCRIPTION	RANGE	UNITS	DEFAULT	VALUE
Auto Restart Option	0/1	DSABLE/ENABLE	DSABLE	
Guide Vane Closure	4 to 25	%	4	
Remote Contacts Option	0/1	DSABLE/ENABLE	DSABLE	
Soft Stop Amps Threshold	40 to 100	%	100	
Surge / Hot Gas Bypass				
Surge Limit/HGBP Option	0, 1, 2		0	
Select: Surge=0, HGBP=1				
Low Load HGBP=2				
Minimum Load Point				
Surge/HGBP Delta Tsmin	0.0 to 150.0	ˆF	45	
Surge/HGBP IGVmin	0.0 to 110.0	%	5.0	
Full Load Point				
Surge/HGBP Delta Tsmax	0.0 to 150.0	ˆF	70	
Surge/HGBP IGVmax	0.0 to 110.0	%	5.0	
Surge Line Shape Factor	–1.000 to 0.000		–0.040	
Surge Line Speed Factor	0.00 to 3.00		1.85	
Surge Line High Offset	0.1 to 3.0		1.0	
Surge/HGBP Deadband	0.5 to 3	ˆF	1	
HGBP On Delta T	0.5 to 10.0	ˆF	2.0	
HGBP Off Delta T	0.5 to 10.0	ˆF	4.0	
Surge Protection				
Surge Delta% Amps	5 to 40	%	20	
Surge Time Period	7 to 10	MIN	8	
Surge Delay Time	0 to 120	SEC	0	
Ice Build Control				
Ice Build Option	0/1	DSABLE/ENABLE	DSABLE	
Ice Build Termination	0 to 2		0	
0=Temp, 1=Contact, 2=Both				
Ice Build Recycle	0/1	DSABLE/ENABLE	DSABLE	
Refrigerant Leak Option	0/1	DSABLE/ENABLE	DSABLE	
Refrigerant Leak Alarm mA	4 to 20	mA	20	
Head Pressure Reference				
Delta P at 0% (4mA)	20 to 85	PSI	25	
Delta P at 100% (20mA)	20 to 85	PSI	50	
Minimum Output	0 to 100	%	0	

NOTE: No variables are available for CCN read or write operation.

CUT ALONG DOTTED LINE

CUT ALONG DOTTED LINE

19XR, XRV PIC II VDO SRD TABLE CONFIGURATION SHEET .

DESCRIPTION	RANGE	UNITS	DEFAULT	VALUE
Diffuser Control				
Diffuser Option	0/1		0	
Diffuser Full Span mA	15 to 22	mA	18.0	
Guide Vane 25% Load (2)	0 to 83	%	6.4	
Guide Vane 50% Load (2)	0 to 83	%	22.9	
Guide Vane 75% Load (2)	0 to 83	%	41.3	
SRD 25% Load (1)	0 to 100	%	73.5	
SRD 50% Load (1)	0 to 100	%	35.1	
SRD 75% Load (1)	0 to 100	%	19.5	
Lift @ 25% Load (1)	0 to 100 0 to 55.6	^F ^C	52.4 29.1	
Lift @ 100% Load (1)	0 to 100 0 to 55.6	^F ^C	67.5 37.5	
Lift @ 25% Load (2)	0 to 100 0 to 55.6	^F ^C	27.2 15.1	
SRD IGV Offset Select	1 to 5		3	
Low Lift Profile Select	1 to 5		3	

NOTE: No variables are available for CCN read or write operation.

19XR, XRV PIC II SETUP1 TABLE CONFIGURATION SHEET

DESCRIPTION	RANGE	UNITS	DEFAULT	VALUE
Comp Motor Temp Override	150 to 200 66 to 93	DEG F DEG C	200 93	
Cond Press Override	90 to 165 621 to 1138	PSI kPa	125 862	
Comp Discharge Alert	125 to 200 52 to 93	DEG F DEG C	200 93	
Comp Thrust Brg Alert	10 to 20 6 to 11	ˆF ˆC	10 6	
Comp Thrust Brg Trip	160 to 185 71 to 85	DEG F DEG C	185 85	
Thrust Brg Reset Factor	1.0 to 3.0		1.4	
Chilled Medium	0/1	WATER/BRINE	WATER	
Chilled Water Deadband	0.5 to 2.0 0.3 to 1.1	ˆF ˆC	1.0 0.6	
Evap Refrig Trippoint	0.0 to 40.0 -17.8 to 4.4	DEG F DEG C	33 0.6	
Refrig Override Delta T	2.0 to 5.0 1.1 to 2.8	ˆF ˆC	3 1.7	
Evap Approach Alert	0.5 to 15 1.1 to 2.8	ˆF ˆC	5 2.8	
Cond Approach Alert	0.5 to 15 0.3 to 8.3	ˆF ˆC	6 3.3	
Condenser Freeze Point	–20 to 35 -28.9 to 1.7	DEG F DEG C	34 1.1	
Flow Delta P Display	0/1	DSABLE/ENABLE	DSABLE	
Evap Flow Delta P Cutout	0.5 to 50.0 3.4 to 344.8	ˆPSI ˆkPa	5.0 34.5	
Cond Flow Delta P Cutout	0.5 to 50.0 3.4 to 344.8	ˆPSI ˆkPa	5.0 34.5	
Cond Hi Flow Alarm Option	0/1	DSABLE/ENABLE	DSABLE	
Cond Hi Flow Del P Limit	0.5 to 50.0 3.4 to 344.8	PSI kPa	50.0 344.8	
Water Flow Verify Time	0.5 to 5	MIN	5	
Oil Press Verify Time	15 to 300	SEC	40	
Recycle Control				
Restart Delta T	2.0 to 10.0 1.1 to 5.6	ˆF ˆC	5 2.8	
Shutdown Delta T	0.5 to 4.0 0.3 to 2.2	ˆF ˆC	1 0.6	
SPARE ALERT/ALARM ENABLE **Disable=0, Lo=1/3, Hi=2/4**				
Spare Temp #1 Enable	0 to 4		0	
Spare Temp #1 Limit	–40 to 245 –40 to 118	DEG F DEG C	245 118	
Spare Temp #2 Enable	0 to 4		0	
Spare Temp #2 Limit	–40 to 245 –40 to 118	DEG F DEG C	245 118	

CUT ALONG DOTTED LINE

CUT ALONG DOTTED LINE

19XR, XRV PIC II SETUP2 TABLE CONFIGURATION SHEET

DESCRIPTION	STATUS	UNITS	DEFAULT	VALUE
Capacity Control				
Proportional Inc Band	2 to 10		6.5	
Proportional DEC Band	2 to 10		6.0	
Proportional ECW Gain	1 to 3		2.0	
Guide Vane Travel Limit	30 to 100	%	80	
VFD Speed Control				
VFD Option	0/1	DSABLE/ENABLE	DSABLE	
VFD Gain	0.1 to 1.5		0.75	
VFD Increase Step	1 to 5	%	2	
VFD Minimum Speed	65 to 100	%	70	
VFD Maximum Speed	90 to 100	%	100	
VFD Start Speed	65 to 100	%	100	
VFD Surge Line Gain	2.0 to 3.5		2.0	
VFD Current Limit	0 to 99999	amps	250	

19XR, XRV PIC II LEADLAG TABLE CONFIGURATION SHEET

DESCRIPTION	RANGE	UNITS	DEFAULT	VALUE
Lead Lag Control				
LEAD/LAG: Configuration DSABLE=0, LEAD=1, LAG=2, STANDBY=3	0 to 3		0	
Load Balance Option	0/1	DSABLE/ENABLE	DSABLE	
Common Sensor Option	0/1	DSABLE/ENABLE	DSABLE	
LAG% Capacity	25 to 75	%	50	
LAG Address	1 to 236		92	
LAG START Timer	2 to 60	MIN	10	
LAG STOP Timer	2 to 60	MIN	10	
PRESTART FAULT Timer	2 to 30	MIN	5	
PULLDOWN Timer	1 to 30	MIN	2	
STANDBY Chiller Option	0/1	DSABLE/ENABLE	DSABLE	
STANDBY% Capacity	25 to 75	%	50	
STANDBY Address	1 to 236		93	

CUT ALONG DOTTED LINE

CUT ALONG DOTTED LINE

19XR, XRV PIC II RAMP_DEM TABLE CONFIGURATION SHEET

DESCRIPTION	RANGE	UNITS	DEFAULT	VALUE
Pulldown Ramp Type: Select: Temp=0, Load=1	0/1		1	
Demand Limit + kW Ramp				
Demand Limit Source Select: Amps=0, kW=1	0/1		0	
Motor Load Ramp% Min	5 to 20		10	
Demand Limit Prop Band	3 to 15	%	10	
Demand Limit At 20 mA	40 to 100	%	40	
20 mA Demand Limit Opt	0/1	DSABLE/ENABLE	DSABLE	
Motor Rated Kilowatts	50 to 9999	kW	145	
Demand Watts Interval	5 to 60	MIN	15	

19XR, XRV PIC II TEMP_CTL TABLE CONFIGURATION SHEET

DESCRIPTION	RANGE	UNITS	DEFAULT	VALUE
Control Point				
ECW Control Option	0/1	DSABLE/ENABLE	DSABLE	
Temp Pulldown Deg/Min	2 to 10 0.6 to 5.6	ˆF ˆC	3 1.7	
Temperature Reset				
RESET TYPE 1				
Degrees Reset At 20 mA	–30 to 30 –17 to 17	ˆF ˆC	10 6	
RESET TYPE 2				
Remote Temp -> No Reset	–40 to 245 –40 to 118	DEG F DEG C	85 29	
Remote Temp -> Full Reset	–40 to 245 –40 to 118	DEG F DEG C	65 18	
Degrees Reset	–30 to 30 –17 to 17	ˆF ˆC	10 6	
RESET TYPE 3				
CHW Delta T -> No Reset	0 to 15 0 to 8	ˆF ˆC	10 6	
CHW Delta T -> Full Reset	0 to 15 0 to 8	ˆF ˆC	0 0	
Degrees Reset	–30 to 30 –17 to 17	ˆF ˆC	5 3	
Select/Enable Reset Type	0 to 3		0	

BROADCAST (BRODEF) CONFIGURATION SHEET

DESCRIPTION	RANGE	UNITS	DEFAULT	VALUE
Time Broadcast Enable	DSABLE/ENABLE		DSABLE	
Daylight Savings				
Start Month	1 to 12		4	
Start Day of Week	1 to 7		7	
Start Week	1 to 5		3	
Start Time	00:00 to 24:00	HH:MM	02:00	
Start Advance	0 to 360	MIN	60	
Stop Month	1 to 12		10	
Stop Day of Week	1 to 7		7	
Stop Week	1 to 5		3	
Stop Time	00:00 to 24:00		02:00	
Stop Back	0 to 360	MIN	60	

DISPLAY AND ALARM SHUTDOWN STATE RECORD SHEET

PRIMARY MESSAGE: _____ DATE: _____ TIME: _____

SECONDARY MESSAGE: _____ COMPRESSOR ONTIME: _____

CHW IN	CHW OUT	EVAP REF

CDW IN	CDW OUT	COND REF

OILPRESS	OIL TEMP	AMPS %

COMMUNICATION MESSAGE _____

DISPLAY AND ALARM SHUTDOWN STATE RECORD SHEET

PRIMARY MESSAGE: _____ DATE: _____ TIME: _____

SECONDARY MESSAGE: _____ COMPRESSOR ONTIME: _____

CHW IN	CHW OUT	EVAP REF

CDW IN	CDW OUT	COND REF

OILPRESS	OIL TEMP	AMPS %

COMMUNICATION MESSAGE _____

CUT ALONG DOTTED LINE

CUT ALONG DOTTED LINE

© Carrier Corporation 2013