Installation, Start-Up and Service Instructions

CONTENTS

Page
SAFETY CONSIDERATIONS 1
GENERAL 1-3
INSTALLATION 3-9
40BNB,BNE Indoor Unit Installation 3
38BNB,BNE Outdoor Unit Installation 5
Power Supply 6
Evacuate Tubing and Check Refrigerant Charge 9
Leak Test 9
START-UP 9
System Checks 9
CARE AND MAINTENANCE 9, 10
38BNB,BNE Outdoor Units 9
40BNB,BNE Indoor Units 9
To Clean Indoor Unit Front Panel 9
To Clean Indoor Coil 9
Air Filters for 38BNB,BNE Outdoor Units and 40BNB,BNE Indoor Units 10
SERVICE 10-13
TROUBLESHOOTING 14

SAFETY CONSIDERATIONS

Installing, starting up, and servicing air-conditioning equipment can be hazardous due to system pressures, electrical components, and equipment location (roofs, elevated structures, etc.).

Only trained, qualified installers and service mechanics should install, start-up, and service this equipment.

Untrained personnel can perform basic maintenance functions such as cleaning coils. All other operations should be performed by trained service personnel.

When working on the equipment, observe precautions in the literature and on tags, stickers, and labels attached to the equipment.

Follow all safety codes. Wear safety glasses and work gloves. Keep quenching cloth and fire extinguisher nearby when brazing. Use care in handling, rigging, and setting bulky equipment.

⚠ WARNING

Before installing or servicing system, always turn off main power to system and install lockout tag on disconnect. There may be more than one disconnect switch. Electrical shock can cause personal injury.

GENERAL

These instructions cover the installation, start-up and servicing of 38BNB,BNE036 outdoor and 40BNB,BNE036 indoor units cooling only and heat pump duct free systems. See Table 1 for parts included. See Tables 2 and 3 for Physical Data.

System Requirements

IMPORTANT: See line sizing requirements in Tables 2 and 3.

IMPORTANT: Both refrigerant lines **must** be insulated separately.

- Consult local building codes and National Electrical Code (NEC, U.S.A.) for special installation requirements.
- Control wiring should be 18 gage.
- Use only type “G” or “C” fuses.
- Use single length power cable without extension.
- Allow sufficient space for airflow clearance on condensing units for wiring, refrigerant piping, and servicing unit. See Fig. 1 and 2 for minimum required distances between unit and walls or ceilings.
- Indoor and outdoor units should be installed at a minimum of 10 ft apart. Maximum line length is 130 ft, and vertical separation is 66 ft.
- Do not install indoor units near a direct source of heat such as direct sunlight, steam or flame.

⚠ CAUTION

Do not bury more than 36 in. of refrigerant pipe in the ground. If any section of pipe is buried, there must be a 6 in. vertical rise to the valve connections on the outdoor units. If more than the recommended length is buried, refrigerant may migrate to the cooler buried section during extended periods of system shut down. This causes refrigerant slugging and could possibly damage the compressor at start-up.

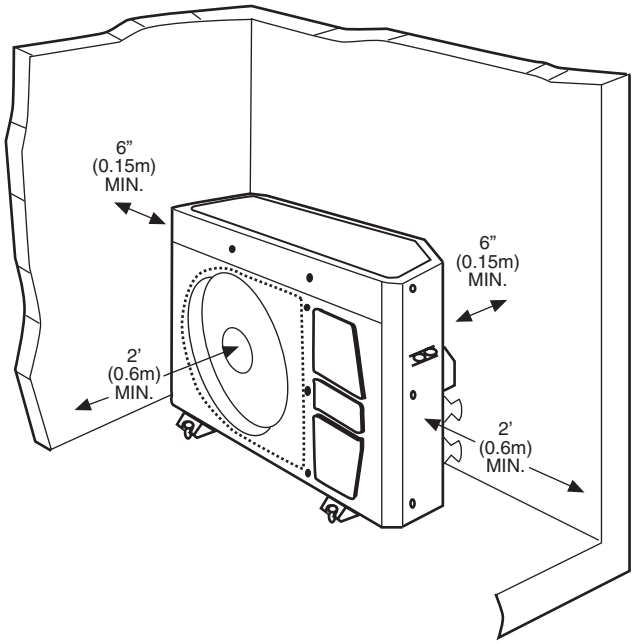

Fig. 1 — 38BNB,BNE Outdoor Unit Clearances

Table 1 — Parts List — High Wall Units

ITEM	QTY	DIAGRAM
Mounting Bracket	1	
Long Screws	9	
$^5/_8$-in. Installation Elbow	1	
Outdoor Sensor Connecting Cable	1	(Heat Pump Only)
Absorption Cushions	4	
Electric Terminals	16	
Remote Controller Rack	1 rack with 2 screws	
Remote Controller and Batteries	1	
Insulation for Fittings	1	
Owner's Manual	1	
Wall Plugs	7	

Table 2 — Physical Data — Cooling Only

INDOOR UNIT	40BNB-036
COOLING CAPACITY (Btuh) SEER EER	33,000 10.0 8.8
SYSTEM CHARGE* (lb)	8.0
MOISTURE REMOVAL (pt/hr)	8.0
AIRFLOW High Cfm	 970
DIMENSIONS H x L x W (in.)	 13.75 x 70.88 x 7.88
NET WEIGHT (lb)	83.0

OUTDOOR UNIT	38BNB-036
TUBE CONNECTIONS Mixed Phase...Suction (in.) Vert Lift/Vert Drop/Max Length (ft)	 $^3/_8$...$^3/_4$ 66/66/130
NOMINAL LINE SIZING Mixed Phase...Suction (in.)	 $^3/_8$...$^3/_4$
DIMENSIONS H x L x W (in.)	 25.18 x 43.31 x 12.28
NET WEIGHT (lb)	180.0

LEGEND

EER — Energy Efficiency Ratio
SEER — Seasonal Energy Efficiency Ratio

*Units are shipped with a factory charge based on 10 to 50 ft of refrigerant lines.

Table 3 — Physical Data — Heat Pump

INDOOR UNIT	40BNE-036
COOLING CAPACITY (Btuh) SEER EER	33,000 10.0 8.8
SYSTEM CHARGE* (lb)	8.0
HEATING CAPACITY (Btuh) HSPF COP	33,400 6.8 2.0
MOISTURE REMOVAL (pt/hr)	8.0
AIRFLOW High Cfm	 970
DIMENSIONS H x L x W (in.)	 350 x 1800 x 200
NET WEIGHT (lb)	83

OUTDOOR UNIT	38BNE-036
TUBE CONNECTIONS Mixed Phase...Suction (in.) Vert Lift/Vert Drop/Max Length (ft)	 $^3/_8$...$^3/_4$ 66/66/130
NOMINAL LINE SIZING Mixed Phase...Suction (in.)	 $^3/_8$...$^3/_4$
DIMENSIONS H x L x W (in.)	 25.18 x 43.31 x 12.28
SHIPPING WEIGHT (lb)	180.0

LEGEND

COP — Coefficient of Performance
EER — Energy Efficiency Ratio
HSPF — Heating Seasonal Performance Factor
SEER — Seasonal Energy Efficiency Ratio

*Units are shipped with a factory charge based on 10 to 50 ft of refrigerant lines.

NOTE: Standard System Operating Conditions — 55 F to 125 F (12.7 C to 51.6 C).

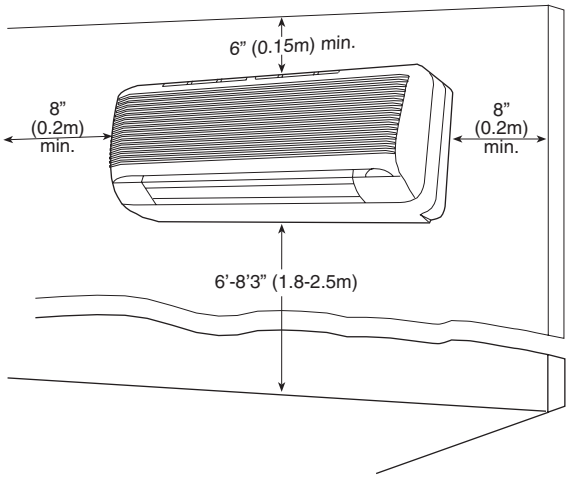

Fig. 2 — 40BNB,BNE Indoor Unit Clearances

INSTALLATION

40BNB,BNE Indoor Unit Installation

INSTALL THE MOUNTING BRACKET

1. Carefully remove the mounting bracket, which is connected to the back of the indoor unit's metal base with 3 screws.
2. Position the mounting bracket on the wall and level it using a spirit level (see Fig. 2 for minimum required clearance distances).
3. Mark the seven drilling holes on the wall, as they appear in Fig. 4.
4. Drill the holes, insert the wall plugs and use the long screws to attach the mounting bracket to the wall.
5. Check that the bracket is level and securely fastened to the wall.

DRILL A HOLE IN THE WALL FOR DRAINAGE AND INTER-UNIT CONNECTIONS — To make the connections between the indoor and outdoor units, a 3-in. hole should be drilled for the refrigerant lines, drainage hose and control cable passage through the wall as shown in Fig. 5.

1. Mark the center of the hole to be drilled according to the refrigerant line routing used and dimensions shown in Fig. 4.
2. Make sure to drill outwards and downwards, so that the opening in the outside wall is at least $^1/_2$-in. lower than the opening on the inside.
3. Make sure the drainage hose is at the bottom side of the hole.
4. If refrigerant line route no. 1, 4 or 5 are used, use a small saw blade to carefully remove the corresponding plastic covering on the side panel.
5. Run outdoor sensor cable, electrical cable, refrigerant lines and drainage tube through the hole.
6. Fill the remaining wall hole gap with an appropriate sealant material.

REFRIGERANT LINE ROUTING — The refrigerant lines may be routed in any of the five directions shown in Fig. 3.

Use the $^5/_8$-in. installation elbow supplied in the standard accessories when routing the refrigerant lines in a direction other than no. 5.

WIRE THE INDOOR UNIT

1. Remove the six screws shown in Fig. 6 and remove the unit's front panel. Save the screws to reassemble.
2. Remove both left and right panels and disconnect the display connector (see Fig. 7).
3. Remove the metal base.
4. Mount the indoor unit on the mounting bracket (see Fig. 8) to make the remainder of the connections easier.
5. Electrical connections are made on the right side; refrigerant and drainage connections on the left. Route the inter-unit control cable and the outdoor sensor cable towards the lower right corner of the indoor unit. (See Fig. 7.)
6. Make sure that the wires are connected in accordance with the wiring diagram on the inside of the front cover, or within this instruction manual.
7. Attach the inter-unit control cable with the cable clamp located on the unit.
8. For heat pump units only, connect the Outdoor Sensor TH3 connector to its mating connector (see Fig. 7).

NOTE: Make sure that the inter-unit electric cable is properly connected to the indoor unit, according to the wiring diagram attached to the air conditioner.

⚠ CAUTION

Make sure that all wires and screws are firmly fastened. Loose wires or connections can cause damage and present a fire hazard.

MAKE DRAINAGE CONNECTIONS

1. Connect the unattached end of the drainage tube to the drainage hose outlet.
2. Seal the drainage connection to prevent leakage.
3. Make sure there are no kinks, "U" bends or flattened sections in the tube.
4. Check that the drainage functions properly. Fill the pan below the unit's coil with water and observe that it freely drains out.
5. Make sure the drainage hose is at the bottom side of the wall through-hole (see Fig. 5).

REASSEMBLE

1. Connect the display connector to the display panel printed circuit board.
2. Reassemble the end panel(s), using the screws (Fig. 6).

CONNECT REFRIGERANT LINES — Connect the ends of the refrigerant lines to their appropriate fittings (see Fig. 9), following these guidelines:

To connect the refrigerant lines use only "L" type sealed, dehydrated copper refrigerant tubing. No other type of tubing may be used. Use of other types of tubing will void the manufacturer's warranty.

Do not open service valves or remove protective caps from tubing ends until all the connections are made.

Take care to avoid kinks or flattening of the tubing.

Bend tubing with special bending tools to avoid the formation of sharp bends.

Keep the tubing free of dirt, sand, moisture and other contaminants to avoid damaging the refrigerant system.

Avoid sags in the suction line to prevent the formation of oil traps.

Insulate both refrigerant lines separately with $^3/_8$-in. walled thermal pipe insulation. Inserting the tubing into the insulation before making the connections can save time and improve insulation. **The suction and mixed-phase lines should never come in direct contact.**

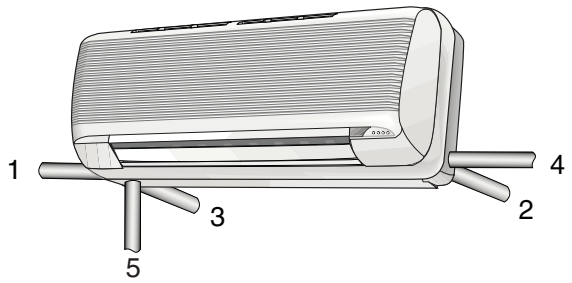

Fig. 3 — Refrigerant Lines

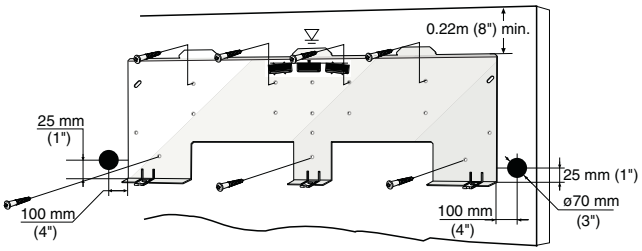

Fig. 4 — Mounting Bracket

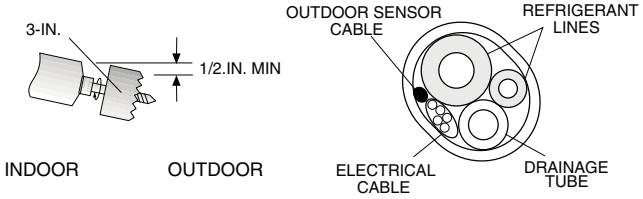

Fig. 5 — Drill Holes

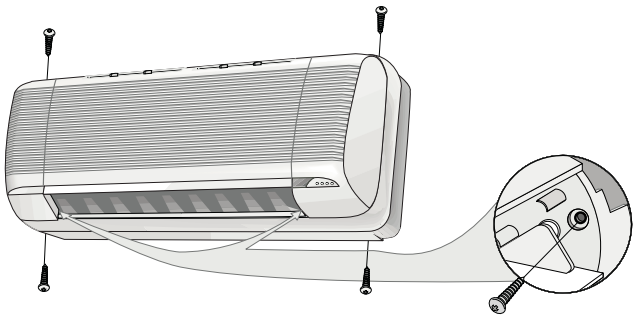

Fig. 6 — Remove Screws

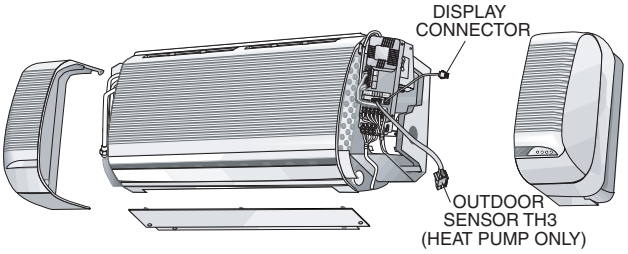

Fig. 7 — Outdoor Sensor Connection

ATTACH THE REMOTE CONTROLLER RACK

1. Use the two screws supplied to attach the rack to the wall in the location selected by the customer (see Fig. 10).
2. Install batteries in the remote control.
3. Place remote control in to remote control rack.
4. For remote control operation, refer to the unit Owner's Manual.

38BNB,BNE Outdoor Unit Installation

NOTE: The outdoor unit must be installed on a solid surface (mounting base).

1. Place the rubber absorption cushions (supplied with the outdoor unit) under the unit's legs to prevent vibrations.
2. Fasten the outdoor unit legs to the mounting base, as shown in Fig. 11. The absorption cushions go between the legs and the mounting base.
3. Be sure that the unit is level.

MAKE WIRING CONNECTIONS

1. Remove the outdoor unit plastic side cover.
2. Loosen the screws on the terminal block.
3. Attach the electrical terminals supplied to the inter-unit control and power cable wires.
4. Connect the wires to the terminal block. See Fig. 12 or 13.

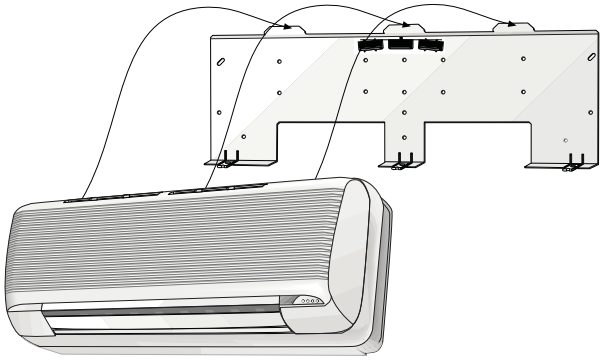

Fig. 8 — Indoor Unit Mounting

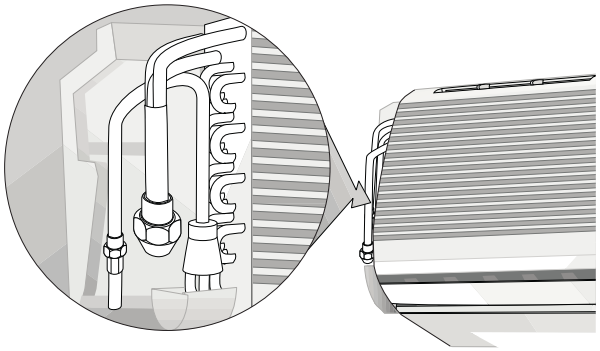

Fig. 9 — Make Refrigerant Connections

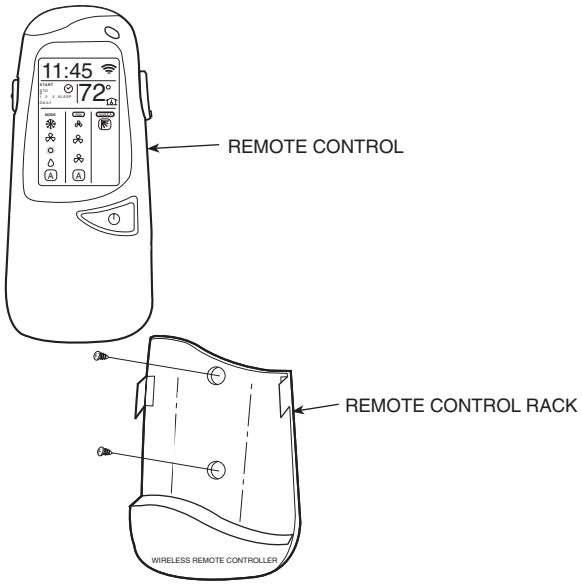

Fig. 10 — Attach Rack to the Wall

5. For heat pump units only, connect the outdoor sensor cable TH3, making sure the connector is properly inserted.
6. Secure the inter-unit electric and sensor cable to the outdoor unit with the clamp shown in Fig. 11.
7. Reassemble the plastic side cover.

NOTE: A drainage tube can be connected to the outdoor unit to remove condensation formed during heating mode operation.

⚠ CAUTION

Make sure that all screws and wires are properly fastened. Loose wires or connections can cause damage and present a fire hazard.

MAKE REFRIGERANT PIPING CONNECTIONS — To connect the refrigerant lines:

Use only "L" type sealed, dehydrated copper refrigerant tubing. No other type of tubing may be used. Use of other types of tubing will void the manufacturer's warranty.

Do not open service valves or remove protective caps from tubing ends until all the connections are made.

Bend tubing with special bending tools to avoid the formation of sharp bends. Take care to avoid kinks or flattening of the tubing.

Keep the tubing free of dirt, sand, moisture, and other contaminants to avoid damaging the refrigerant system.

Avoid sags in the suction line to prevent the formation of oil traps.

Insulate each tube with $^3/_8$-in. walled thermal pipe insulation. Inserting the tubing into the insulation before making the connections will save time and improve installation. **The suction and mixed-phase lines should never come in direct contact.**

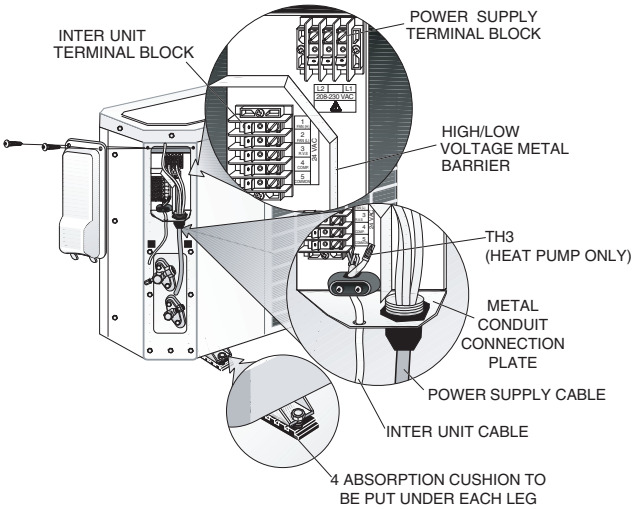

Fig. 11 — Location of Legs on Base — Outdoor Units

FLARING AND CONNECTING REFRIGERANT LINES

1. Remove the protective cap from the flare fitting.
2. Remove the protective cap from the tubing and cut to the required length. Be sure that the cut is perpendicular and clean, without burrs.
3. Slip the flare nut on the tubing and flare the tube end using standard flaring tools.
4. Tighten the nut until resistance is met. Mark the nut and the fitting. Using a suitable wrench, tighten an additional $^1/_4$ turn. Use the following specified torque, according to connection size:

Mixed-Phase line:	Suction line:
$^3/_8$-in. — (29 ft-lb)	$^3/_4$-in. — (72 ft-lb)

NOTE: The valves on the outdoor unit must remain closed until all 4 connections have been made.

Power Supply — See Tables 4 and 5 for electrical data and Fig. 12 and 13 for system wiring diagrams.

Table 4 — Electrical Data, Indoor Units — 208/230-1-60

UNIT		MCA*	MOCP*	FULL LOAD AMPS	FAN MOTOR AMPS	COMPRESSOR AMPS	COMPRESSOR LOCKED ROTOR AMPS
40BNB	**036**	0.8	15	0.6	0.6	NA	
40BNE	**036**	0.8	15	0.6	0.6	NA	

LEGEND

MCA — Minimum Circuit Amps
MOCP — Maximum Overcurrent Protection

*If indoor unit is powered from outdoor terminal block, the MOCP for the outdoor unit is for both sections

NOTE: Specifications and performance data are subject to change without notice.

Table 5 — Electrical Data, Outdoor Units — 208/230-1-60

UNIT		MCA*	MOCP*	FULL LOAD AMPS	FAN MOTOR AMPS	COMPRESSOR AMPS	COMPRESSOR LOCKED ROTOR AMPS
38BNB	**036**	25	40	20.2	1.8	18.4	95
38BNE	**036**	25	40	20.2	1.8	18.4	95

LEGEND

MCA — Minimum Circuit Amps
MOCP — Maximum Overcurrent Protection

*If indoor unit is powered from outdoor terminal block, the MOCP for the outdoor unit is for both sections

NOTE: Specifications and performance data are subject to change without notice.

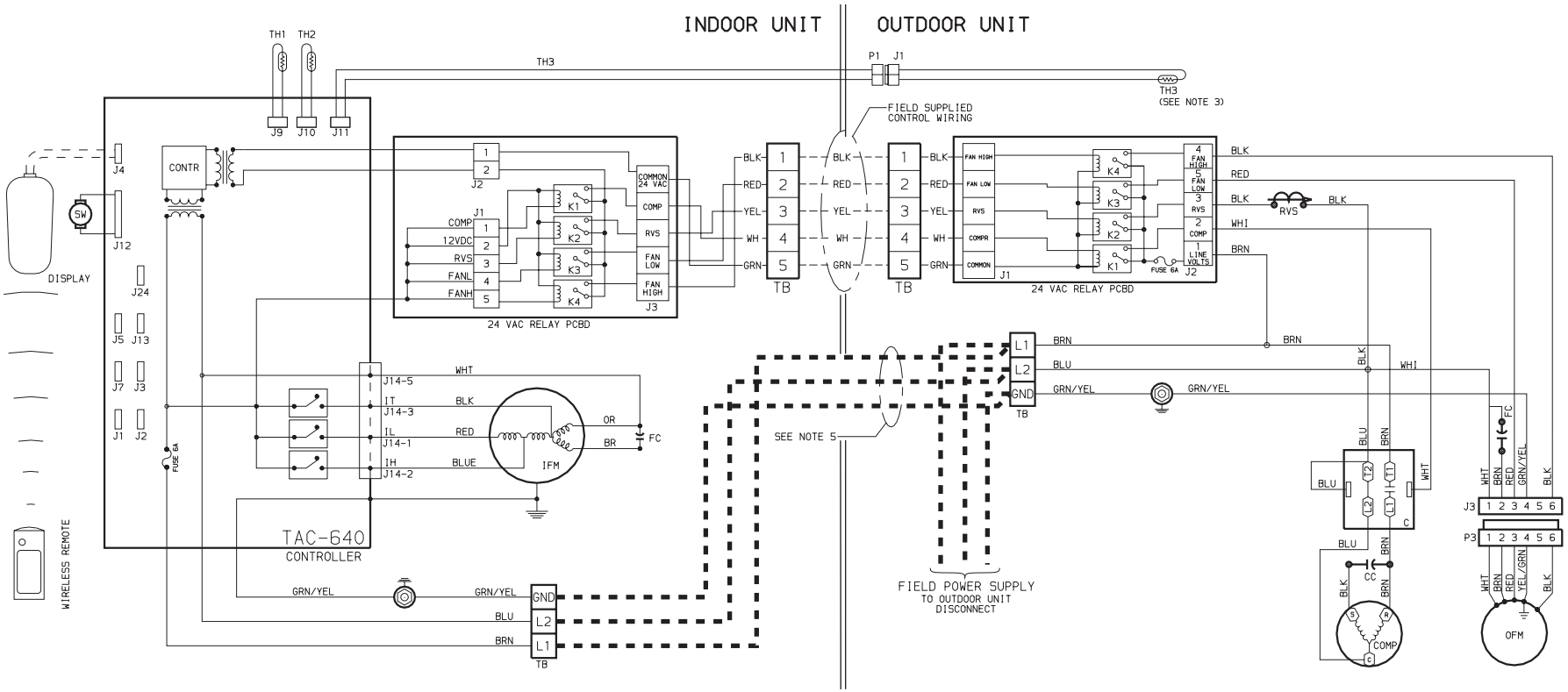

LEGEND

C	— Contactor	(x)	Terminal (Marked)
CC	— Compressor Capacitor	○	Splice
COMP	— Compressor	●	Terminal (Unmarked)
FC	— Fan Capacitor	[x]	Terminal Block
GND	— Ground	———	Factory Wiring
IFM	— Indoor Fan Motor	- - -	Field Control Wiring
OFM	— Outdoor Fan Motor	▬ ▬ ▬	Field Power Wiring
RVS	— Reversing Valve Solenoid	— · —	Accessory or Optional Wiring
SW	— Sweep Motor		
TB	— Terminal Block		
TH	— Thermistor/Thermostat		

NOTES:
1. If any of the original wire furnished must be replaced, it must be replaced with Type 90° C wire or its equivalent.
2. Wire in accordance with National Electrical Code (NEC) and local codes.
3. Thermistor wiring cable 32 ft long provided with indoor unit.
4. Compressor and fan motors are protected by internal thermal overloads.
5. Indoor unit shown with power source from outdoor unit. Indoor unit may be wired to separate power source depending on service requirements.

Fig. 12 — Heat Pump System Wiring Schematic 40BNE036 Fan Coil with 38BNE036 Condensing Unit

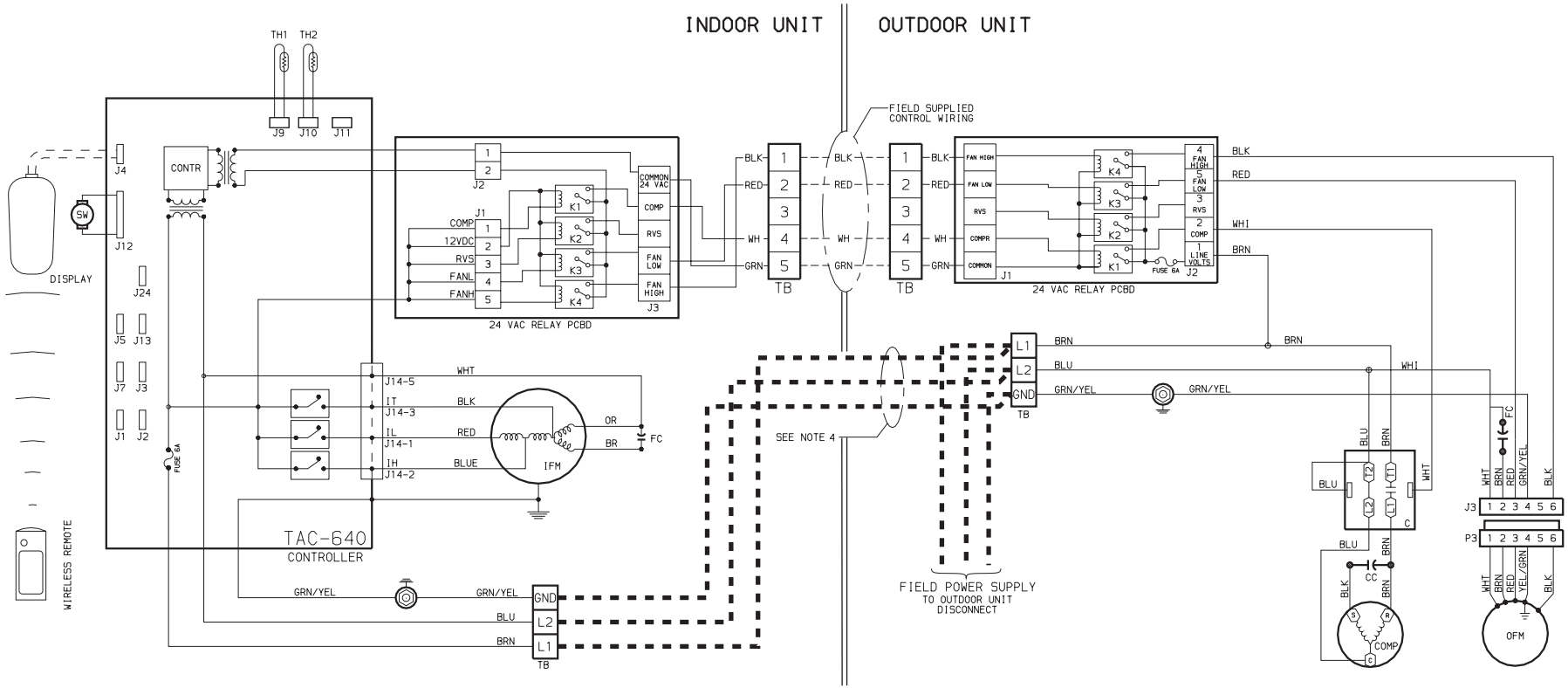

LEGEND

C	— Contactor	(x)	Terminal (Marked)
CC	— Compressor Capacitor	○	Splice
COMP	— Compressor	●	Terminal (Unmarked)
FC	— Fan Capacitor	[x]	Terminal Block
GND	— Ground	———	Factory Wiring
IFM	— Indoor Fan Motor	- - -	Field Control Wiring
OFM	— Outdoor Fan Motor	▬ ▬	Field Power Wiring
SW	— Sweep Motor	—·—	Accessory or Optional Wiring
TB	— Terminal Block		
TH	— Thermistor/Thermostat		

NOTES:
1. If any of the original wire furnished must be replaced, it must be replaced with Type 90° C wire or its equivalent.
2. Wire in accordance with National Electrical Code (NEC) and local codes.
3. Compressor and fan motors are protected by internal thermal overloads.
4. Indoor unit shown with power source from outdoor unit. Indoor unit may be wired to separate power source depending on service requirements.

Fig. 13 — Cooling Only System Wiring Schematic 40BNB036 Fan Coil with 38BNB036 Condensing Unit

Evacuate Tubing And Check Refrigerant Charge — When all the fittings are connected, air must be expelled. Follow the steps below to create an air vacuum.

1. Open the service port cap on the suction line valve (large valve).
2. Connect the vacuum pump to the service port via the pressure gage and evacuate to 500 microns to eliminate contamination and moisture.
3. Be sure that full vacuum is present. Disconnect the vacuum pump.
4. Open the mixed-phase valve (small valve) with an Allen wrench.
5. Open the suction line valve (large valve) with an Allen wrench.
6. The outdoor unit is supplied with sufficient R-22 refrigerant for 10 to 50 ft of line set. Add 0.9 oz of refrigerant for each additional 3 ft of tubing used.
7. Close the service port caps on the suction line and the mixed-phase valves.
8. Make sure that the valves are properly opened. Be careful not to open them more than required as this may damage the thread.
9. Replace the service port cap. Using refrigerant oil, lubricate the cap beam and hand tighten the cap, until resistance is met. Use a suitable wrench to tighten the cap by an additional $^1/_2$ turn.

Leak Test — Leak test all fittings with appropriate test equipment.

START-UP

System Checks

1. Hide the tubing where possible.
2. Make sure that the drainage tube slopes downward along its entire length.
3. Insulate tubing and connections.
4. Fasten tubes to the outside wall.
5. Seal the hole through which the cables and tubing pass.
6. Connect the air conditioner to the power source and turn it on.
7. Check all air conditioner operating modes. Refer to Owner's Manual for operating details.

INDOOR UNIT

1. Do all the remote controller buttons function properly?
2. Do the display panel lights work properly?
3. Does the air deflection louver function properly?
4. Does the drainage work?

OUTDOOR UNIT

1. Are there unusual noises or vibrations during operation?
2. Is noise, drain water or airflow from the unit likely to disturb the neighbors?
3. Are there any gas leaks?

EXPLAIN THE FOLLOWING ITEMS TO THE CUSTOMER, WITH THE AID OF THE OWNER'S MANUAL:

1. How to turn the air conditioner on and off; selecting cooling, heating and other operating modes; setting a desired temperature; setting the timer to automatically start and stop air conditioner operation; and the other features of the remote controller and display panel.
2. How to remove and clean the air filter.
3. How to set the air deflection louver.
4. Explain care and maintenance.
5. Present the Owner's Manual and installation instructions to the customer.

CARE AND MAINTENANCE

The following may be performed by the equipment owner.

38BNB,BNE Outdoor Units

⚠ WARNING

Before performing recommended maintenance, be sure unit main power switch is turned off. Failure to do so may result in electric shock or injury from rotating fan blade.

CLEANING COILS — Coil should be washed out with water or blown out with compressed air. Clean coil annually or as required by location and outdoor air conditions. Inspect coil monthly and clean as required. Fins are not continuous through coil sections. Dirt and debris may pass through first section, become trapped between the row of fins and restrict outdoor unit airflow. Use a flashlight to determine if dirt or debris has collected between coil sections.

Clean coil as follows:

1. Turn off unit power.
2. Using a garden hose or other suitable equipment, flush coil from the outside to remove dirt. Be sure to flush all dirt and debris from drain holes in base of unit. Fan motors are waterproof.

40BNB,BNE Indoor Units

⚠ CAUTION

To avoid the possibility of electric shock, before performing any cleaning and maintenance operations, always turn off power to the system by pressing the mode button on the remote control until the display shows "OFF," and turn off the separate disconnect switch located near the unit. If the indoor unit is on a separate switch, be sure to turn this disconnect off as well.

⚠ CAUTION

Do not wash filter in water over 120° F (to avoid shrinkage). Do not expose filter to fire (to avoid fire damage). Do not expose filter to direct sunlight. Clean filter more frequently when air is extremely dirty.

⚠ CAUTION

Do not attempt to clean or service components in control box.

To Clean Indoor Unit Front Panel — If the front panel of the unit becomes dirty or smudged, wipe the outside of the panel with a soft dry cloth. Use a mild liquid detergent and wipe off carefully with a dry cloth.

To Clean Indoor Coil — To clean the coil, remove indoor unit front panel and vacuum the coil fins, using care not to bend or damage fins.

LUBRICATION — The indoor-fan, automatic air sweep, and the outdoor-fan motors are factory lubricated and require no oiling.

Air Filters for 38BNB,BNE Outdoor Units and 40BNB,BNE Indoor Units

⚠ CAUTION

Operating system with dirty air filters may damage the indoor unit and, in addition, can cause reduced performance, intermittent system operation, frost build-up on the indoor coil, and blown fuses. Inspect and clean or replace the air filters monthly.

TO REMOVE AIR FILTERS — Remove filters by pulling them straight out.

TO CLEAN OR REPLACE FILTERS — Filters can be vacuumed or washed in warm water. Shake filter to remove any excess water, and replace by sliding filter behind grille until filter snaps in place. If the filter has begun to break down or is torn, replace it. Replacement filters are available through a local dealer.

SERVICE (Tables 6 and 7 and Fig. 14)

The following should be performed by a qualified service technician.

Clean Condensate Drains — Clean all drains and drain pans at the start of each cooling season. Check the flow by pouring water into the drain.

Clean or Replace Drain Pan — The drain pan should only be cleaned or replaced by a qualified service technician.

1. Place a plastic sheet on the floor to catch any water that may spill from drain pan.
2. Remove the intake grille and distribution assembly.
3. Remove the condensate water in the drain pan by letting water drain into a 3-gallon bucket.

Table 6 — Service Indicators

LAMP STATUS	INDICATION	CORRECTIVE ACTION
Flashing*	Dirty filter	Clean the filter.
1 Flash	Faulty TH1 Sensor	Check the TH1 thermistor for correct resistance. Check for proper connection. Replace thermistor if necessary.
2 Flashes	Faulty TH2 Sensor	Check the TH2 thermistor for correct resistance. Check for proper connection. Replace thermistor if necessary.
3 Flashes	Low Pressure	Check system pressures. Check refrigerant charge. Check thermistors (TH1 and TH2) for correct resistance.
4 Flashes	High Pressure	Check system pressures. Check refrigerant charge. Check thermistors (TH1 and TH2) for correct resistance.
5 Flashes	Low Voltage	Check operating voltage. Check electrical connections.
6 Flashes	High Voltage	Check operating voltage. Check electrical connections.

*The Filter Indicator lamp is found on the unit front panel; this lamp will flash repeatedly when the filter needs cleaning. The remainder of the table refers to the Service Indicator Light, which is located on the control panel beneath the grille cover. For more information, refer to the Owner's Manual.

NOTE: The power light stays on when the unit is powered up and operating. The power light flashes to indicate there is a system error. Error code read from control. The air conditioner light is on during cooling and heating, and flashes during defrost.

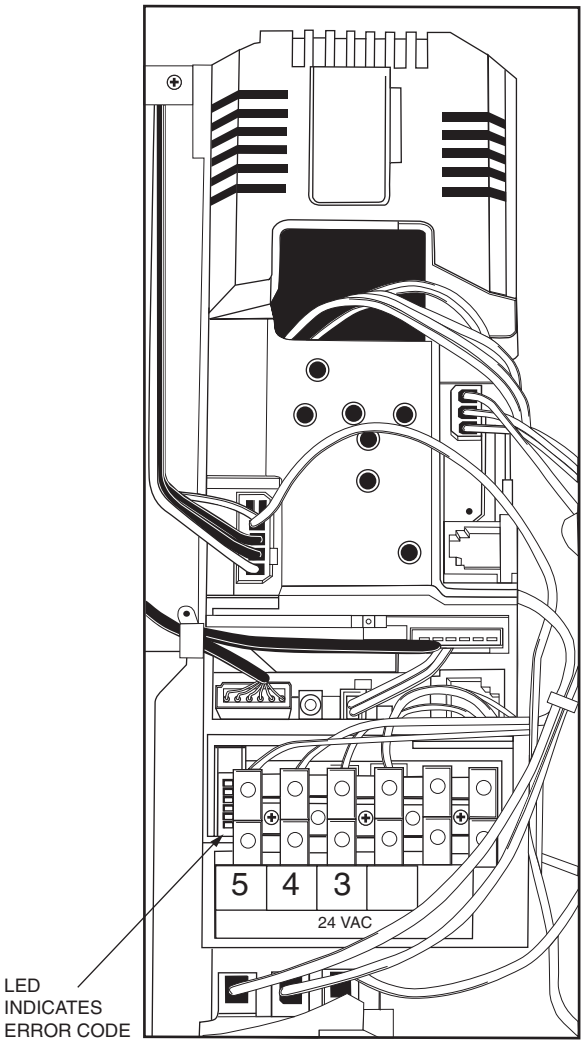

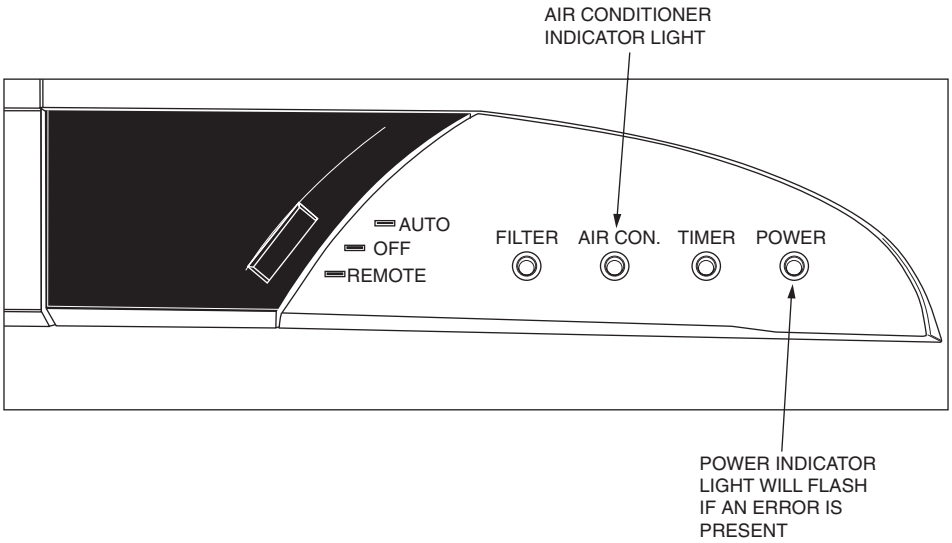

Fig. 14 — Indicator Lights

Table 7 — 40BNB/BNE Thermistor TH-1, TH-2, and TH-3 Temperature to Resistance Conversion

TEMPEATURE (F)	TEMPERATURE (C)	TEMPERATURE TOLERANCE (F)	TEMPERATURE TOLERANCE (C)	MINIMUM RESISTANCE (KΩ)	MEAN RESISTANCE (KΩ)	MAXIMUM RESISTANCE (KΩ)
–4.0	**–20**	±2.0	±1.1	30.89	32.44	34.05
–2.2	**–19**	±2.0	±1.1	29.46	30.93	32.45
–0.4	**–18**	±2.0	±1.1	28.12	29.51	30.94
1.4	**–17**	±2.0	±1.1	26.84	28.16	29.51
3.2	**–16**	±2.0	±1.1	25.64	26.88	28.15
5.0	**–15**	±2.0	±1.1	24.49	25.66	26.87
6.8	**–14**	±2.0	±1.1	23.40	24.52	25.66
8.6	**–13**	±2.0	±1.1	22.38	23.43	24.50
10.4	**–12**	±2.0	±1.1	21.40	22.39	23.41
12.2	**–11**	±2.0	±1.1	20.47	21.41	22.38
14.0	**–10**	±1.8	±1.0	19.59	20.48	21.40
15.8	**–9**	±1.8	±1.0	18.74	19.59	20.45
17.6	**–8**	±1.8	±1.0	17.94	18.74	19.56
19.4	**–7**	±1.8	±1.0	17.17	17.93	18.71
21.2	**–6**	±1.8	±1.0	16.44	17.16	17.90
23.0	**–5**	±1.8	±1.0	15.75	16.43	17.13
24.8	**–4**	±1.8	±1.0	15.10	15.74	16.40
26.6	**–3**	±1.8	±1.0	14.47	15.08	15.71
28.4	**–2**	±1.8	±1.0	13.87	14.46	15.05
30.2	**–1**	±1.8	±1.0	13.31	13.86	14.42
32.0	**0**	±1.8	±1.0	12.77	13.29	13.83
33.8	**1**	±1.8	±1.0	12.25	12.74	13.25
35.6	**2**	±1.8	±1.0	11.75	12.22	12.70
37.4	**3**	±1.8	±1.0	11.28	11.73	12.18
39.2	**4**	±1.8	±1.0	10.83	11.25	11.68
41.0	**5**	±1.8	±1.0	10.40	10.80	11.21
42.8	**6**	±1.8	±1.0	9.986	10.370	10.76
44.6	**7**	±1.8	±1.0	9.595	9.960	10.33
46.4	**8**	±1.8	±1.0	9.222	9.569	9.921
48.2	**9**	±1.8	±1.0	8.866	9.196	9.530
50.0	**10**	±1.8	±1.0	8.526	8.840	9.157
51.8	**11**	±1.8	±1.0	8.197	8.496	8.797
53.6	**12**	±1.8	±1.0	7.883	8.167	8.453
55.4	**13**	±1.6	±0.9	7.583	7.853	8.125
57.2	**14**	±1.6	±0.9	7.296	7.553	7.812
59.0	**15**	±1.6	±0.9	7.022	7.267	7.513
60.8	**16**	±1.6	±0.9	6.761	6.993	7.227
62.6	**17**	±1.6	±0.9	6.510	6.731	6.954
64.4	**18**	±1.6	±0.9	6.271	6.481	6.693
66.2	**19**	±1.6	±0.9	6.042	6.242	6.444
68.0	**20**	±1.6	±0.9	5.822	6.013	6.205
69.8	**21**	±1.6	±0.9	5.611	5.793	5.975
71.6	**22**	±1.6	±0.9	5.408	5.581	5.755
73.4	**23**	±1.6	±0.9	5.214	5.379	5.544
75.2	**24**	±1.6	±0.9	5.028	5.185	5.343
77.0	**25**	±1.6	±0.9	4.850	5.000	5.150
78.8	**26**	±1.6	±0.9	4.675	4.821	4.968
80.6	**27**	±1.6	±0.9	4.508	4.650	4.793
82.4	**28**	±1.6	±0.9	4.347	4.486	4.626
84.2	**29**	±1.8	±1.0	4.193	4.329	4.466
86.0	**30**	±1.8	±1.0	4.046	4.179	4.312
87.8	**31**	±1.8	±1.0	3.904	4.033	4.163
89.6	**32**	±1.8	±1.0	3.767	3.894	4.020
91.4	**33**	±1.8	±1.0	3.637	3.760	3.884
93.2	**34**	±1.8	±1.0	3.511	3.631	3.752
95.0	**35**	±1.8	±1.0	3.391	3.508	3.626
96.8	**36**	±2.0	±1.1	3.275	3.390	3.505
98.6	**37**	±2.0	±1.1	3.164	3.276	3.389

NOTE: Resistance tolerance ± 3%.

Table 7 — 40BNB/BNE Thermistor TH-1, TH-2, and TH-3 Temperature to Resistance Conversion (cont)

TEMPEATURE (F)	TEMPERATURE (C)	TEMPERATURE TOLERANCE (F)	TEMPERATURE TOLERANCE (C)	MINIMUM RESISTANCE (KΩ)	MEAN RESISTANCE (KΩ)	MAXIMUM RESISTANCE (KΩ)
100.4	**38**	±2.0	±1.1	3.058	3.167	3.277
102.2	**39**	±2.0	±1.1	2.956	3.062	3.169
104.0	**40**	±2.0	±1.1	2.857	2.961	3.066
105.8	**41**	±2.0	±1.1	2.762	2.864	2.966
107.6	**42**	±2.0	±1.1	2.671	2.770	2.870
109.4	**43**	±2.2	±1.2	2.583	2.679	2.777
111.2	**44**	±2.2	±1.2	2.498	2.593	2.688
113.0	**45**	±2.2	±1.2	2.417	2.509	2.602
114.8	**46**	±2.2	±1.2	2.339	2.429	2.520
116.6	**47**	±2.2	±1.2	2.264	2.352	2.441
118.4	**48**	±2.3	±1.3	2.192	2.227	2.364
120.2	**49**	±2.3	±1.3	2.122	2.206	2.291
122.0	**50**	±2.3	±1.3	2.055	2.137	2.220
123.8	**51**	±2.3	±1.3	1.990	2.070	2.151
125.6	**52**	±2.3	±1.3	1.928	2.006	2.085
127.4	**53**	±2.3	±1.3	1.867	1.943	2.021
129.2	**54**	±2.3	±1.3	1.809	1.883	1.959
131.0	**55**	±2.5	±1.4	1.753	1.826	1.900
132.8	**56**	±2.5	±1.4	1.699	1.770	1.842
134.6	**57**	±2.5	±1.4	1.647	1.717	1.787
136.4	**58**	±2.5	±1.4	1.597	1.665	1.734
138.2	**59**	±2.5	±1.4	1.549	1.615	1.683
140.0	**60**	±2.5	±1.4	1.503	1.567	1.633
141.8	**61**	±2.7	±1.5	1.458	1.521	1.585
143.6	**62**	±2.7	±1.5	1.414	1.476	1.539
145.4	**63**	±2.7	±1.5	1.372	1.432	1.494
147.2	**64**	±2.7	±1.5	1.332	1.391	1.451
149.0	**65**	±2.7	±1.5	1.293	1.350	1.409
150.8	**66**	±2.9	±1.6	1.255	1.311	1.369
152.6	**67**	±2.9	±1.6	1.219	1.274	1.330
154.4	**68**	±2.9	±1.6	1.184	1.237	1.292
156.2	**69**	±2.9	±1.6	1.150	1.202	1.256
158.0	**70**	±2.9	±1.6	1.117	1.168	1.221

NOTE: Resistance tolerance ± 3%.

TROUBLESHOOTING (Table 8)

⚠ WARNING

Be sure to check for broken wires or loose cable lugs before troubleshooting system.

Table 8 — General System Troubleshooting Guide

SYMPTOM	PROBABLE CAUSE	CORRECTIVE ACTION
Unit Fails to Start.	Power supply to unit not connected (POWER LED Off).	Check for proper connection of power at disconnect.
	Fuse blown (POWER LED Off).	Reset circuit breaker or replace line fuse.
	ON/SEND button has not been pressed.	Press ON/SEND button on remote control, or use the AUTO 3-position slide switch for automatic constant 72 F (22 C) set point (when remote control is not available).
	Indoor unit does not receive transmitted commands.	Make sure that nothing is blocking the remote control transmission to the unit.
	AUTO-OFF-REMOTE switch is set to Off.	Slide the 3-position switch on the Display to REMOTE position.
Only Indoor Fan Works when Cooling or Heating is Desired. **NOTE: Indoor fan runs continuously in cooling mode.**	The selected mode is Fan Only, or Cool when heating is desired.	Check if the remote control is in the desired mode. If not, select the correct mode (refer to User manual). Also note that every 15 minutes (max) the compressor will be switched minimally on for 3 minutes.
	Temperature is set to a value which is too high (in Cool mode).	Observe the temperature setting on the remote control. Also note that each 15 minutes (max), the compressor will be switched on minimally for 3 minutes.
Only Indoor Fan Motor and Outdoor Fan Motor are Working. No Cooling and/or Heating Takes Place.	Overload safety device on compressor is cut out due to high temperature.	Switch off power and try again after one hour.
	Compressor run capacitor is burnt.	Replace compressor run capacitor.
	Compressor winding shorted.	Replace compressor.
No Air Supply at Indoor Unit (Compressor Operates).	Indoor fan motor is blocked or turns slowly.	1. Check voltage. Repair wiring if necessary. 2. Check indoor fan wheel if tight on motor shaft. Tighten if necessary.
	Indoor fan motor capacitor is burnt.	Replace indoor fan motor capacitor.
	Indoor fan motor winding is burnt.	Replace indoor fan motor.
	In Heat mode: Delayed start for indoor fan motor.	Normal software delay (max. 20 sec).
	Clogged air filters.	Clean filters.
Low Capacity.	Lack of refrigerant. Ice formation on the evaporator coil.	Unit must be charged (according to the nameplate) after localizing the gas leak.
	Clogged air filters.	Clean filters.
In Heat Mode, Only Compressor Runs. Outdoor and Indoor Fan Motors are Stopped. AIR CON Indicator Flashes.	A/C operating in defrost cycle.	Wait 10 minutes (maximum) until the unit resumes normal operation.
Water Accumulates and Overflows from Evaporator Drain Pan.	Drain pan pipe or hose is clogged or the spout of drain pan is clogged.	Disassemble plastic drain pipe from spout of evaporator drain pan. Flush with clean water.
Unit Does Not Operate in Desired Mode.	The 3-position slide switch on the unit display is in AUTO or OFF position.	Change the slider position to REMOTE.
	Faulty remote control settings.	1. If remote control symbols respond to the commands correctly, check the unit ID Code (Standard or Alternative). Refer to “Changing Unit ID Code” in the Owner’s Guide and Remote Control DIP switch 3 setting in the Owner’s Manual. 2. If Cool commands are OK, but Heat symbol is skipped on LCD, refer to Remote Control DIP switch 7 setting in the Owner’s Manual. 3. Replace remote control.
	Remote control low battery.	Replace remote control batteries.
The Unit Receives Interference from Other Remote Control or the Remote Control Interferes with Other Instruments.	Common Infrared Code.	Modify the Remote Control IR transmission code. Refer to “Changing Unit ID Code” and to Remote Control DIP switch 3 setting in the Owner’s Manual.

Copyright 2005 Carrier Corporation