WeatherMaster® Hybrid Heat 48QE(G/H)*04-06 Single Package Rooftop Heat Pump with Ultra Low NOx (14 ng/J) Gas Heat, Puron Advance™ (R-454B) Refrigerant and EcoBlue™ Fan Technology

Installation Instructions

CONTENTS

Page

SAFETY CONSIDERATIONS 1
GENERAL 5
Rated Indoor Airflow 5
A2L REFRIGERATION INFORMATION 5
Transportation 5
INSTALLATION 10
Jobsite Survey 10
Step 1 — Plan for Unit Location 10
- ROOF MOUNT

Step 2 — Plan for Sequence of Unit Installation . . 10
- CURB-MOUNTED INSTALLATION
- PAD-MOUNTED INSTALLATION
- FRAME-MOUNTED INSTALLATION

Step 3 — Inspect Unit 10
Step 4 — Provide Unit Support 10
- ROOF CURB MOUNT
- SLAB MOUNT (HORIZONTAL UNITS ONLY)
- ALTERNATE UNIT SUPPORT (IN LIEU OF CURB OR SLAB MOUNT)

Step 5 — Field Fabricate Ductwork 12
Step 6 — Rig and Place Unit 12
- POSITIONING ON CURB

Step 7 — Convert to Horizontal and Connect Ductwork (when required) 13
Step 8 — Install Outside Air Hood 14
- ECONOMIZER HOOD PACKAGE REMOVAL (FACTORY OPTION)
- ECONOMIZER HOOD SETUP

Step 9 — Units with Hinged Panels Only 15
Step 10 — Install Flue Hood 15
Step 11 — Install Gas Piping 15
- FACTORY OPTION THRU-BASE CONNECTIONS (GAS CONNECTIONS)

Step 12 — Install External Condensate Trap and Line 19
Step 13 — Make Electrical Connections 19
- FIELD POWER SUPPLY
- UNITS WITH FACTORY-INSTALLED NON-FUSED DISCONNECT OR HACR CIRCUIT BREAKER
- UNITS WITHOUT FACTORY-INSTALLED NON-FUSED DISCONNECT OR HACR CIRCUIT BREAKER
- ALL UNITS
- CONVENIENCE OUTLETS
- FACTORY OPTION THRU-BASE CONNECTIONS
- UNITS WITHOUT THRU-BASE CONNECTIONS
- FIELD CONTROL WIRING
- THERMOSTAT
- UNIT WITHOUT THRU-BASE CONNECTION KIT
- ZS SPACE SENSOR
- HUMIDI-MIZER® SYSTEM CONTROL CONNECTIONS
- CONTROL AND POWER WIRING DIAGRAMS

Integrated Gas Controller 32
Leak Dissipation System 34
- SEQUENCE OF OPERATION
- VVT AND VAV ZONING APPLICATIONS
- LEAK DISSIPATION SYSTEM SELF-TEST
- DISSIPATION AIR FLOW
- MINIMUM CONDITIONED SPACE AREA
- TROUBLESHOOTING

SystemVu™ Controller 38
Controller Options 38
- LOW AMBIENT

Smoke Detectors 38
- COMPLETING RETURN AIR SMOKE SENSOR INSTALLATION

Step 14 — Install Accessories 38
- ADDITIONAL APPLICATION DATA

Step 15 — Fan Speed Set Up 39
TEMPORARY FURNACE OPERATION DURING CONSTRUCTION 40
COMPRESSOR ROTATION 40
FASTENER TORQUE VALUES 40
TYPICAL UNIT PIPING 41
START-UP CHECKLIST CL-1

SAFETY CONSIDERATIONS

Installation and servicing of air-conditioning equipment can be hazardous due to system pressure and electrical components. Only trained and qualified service personnel should install, repair, or service air-conditioning equipment.

Untrained personnel can perform basic maintenance functions of cleaning coils and filters and replacing filters. All other operations should be performed by trained service personnel. When working on air-conditioning equipment, observe precautions in the literature, tags and labels attached to the unit, and other safety precautions that may apply.

Follow all safety codes, including ANSI (American National Standards Institute) Z223.1. Wear safety glasses and work gloves. Use quenching cloth for unbrazing operations. Have fire extinguisher available for all brazing operations.

It is important to recognize safety information. This is the safety-alert symbol ⚠. When you see this symbol on the unit and in instructions or manuals, be alert to the potential for personal injury.

Understand the signal words DANGER, WARNING, CAUTION, and NOTE. These words are used with the safety-alert symbol. DANGER identifies the most serious hazards which **will** result in severe personal injury or death. WARNING signifies hazards which **could** result in personal injury or death. CAUTION is used to identify unsafe practices, which **may** result in minor personal injury or product and property damage. NOTE is used to highlight

Manufacturer reserves the right to discontinue, or change at any time, specifications or designs without notice and without incurring obligations.

Catalog No. 04-53480693-01 Printed in U.S.A. Form No. 48QEG-4-6-02SI Rev A Pg 1 4-26 Replaces: 48QEG-4-6-01SI

suggestions which **will** result in enhanced installation, reliability, or operation.

The following symbols may be seen on the equipment:

SYMBOL	CODE	MEANING
	GHS02: Flammable	Flammable gas
	ISO 7000-0790 (2004-01)	Read operator's manual.
	ISO 7000-1659 (2004-01)	Service indicator: read technical manual.
	ISO 7000-1641 (2004-01)	Operator's manual: operating instructions

⚠ DANGER

ELECTRICAL SHOCK HAZARD

Failure to follow this warning will result in personal injury or death.

Before performing service or maintenance operations on unit, turn off main power switch to unit and install lock(s) and lockout tag(s). Ensure electrical service to rooftop unit agrees with voltage and amperage listed on the unit rating plate. Unit may have more than one power switch.

⚠ WARNING

UNIT OPERATION AND SAFETY HAZARD

Failure to follow this warning could cause personal injury, death and/or equipment damage.

R-454B is an A2L refrigerant. All service equipment or components must be A2L refrigerant rated. Do not use non-A2L rated equipment or components on R-454B refrigerant equipment.

⚠ AVERTISSEMENT

FONCTIONNEMENT DE L'APPAREIL ET DANGERS POUR LA SÉCURITÉ

Le non-respect de cet avertissement peut entraîner des blessures graves, voire mortelles, et/ou des dommages matériels.

Le R-454B est un fluide frigorigène A2L. Tous les équipements et composants d'entretien doivent être compatibles avec le R-454B. N'utilisez pas d'équipements ou de composants non compatibles avec le R-454B.

⚠ WARNING

PERSONAL INJURY AND ENVIRONMENTAL HAZARD

Failure to follow this warning could cause personal injury or death.

Relieve pressure and recover all refrigerant before system repair or final unit disposal.

Wear safety glasses and gloves when handling refrigerants. Keep torches and other ignition sources away from refrigerants and oils.

⚠ WARNING

Use caution when servicing compressor terminal pins. System or compressor abnormalities can dislodge pins allowing oil and refrigerant to vent under pressure.

⚠ AVERTISSEMENT

Soyez prudent lors de l'entretien des bornes du compresseur. Les anomalies du système ou du compresseur peuvent déloger les bornes, permettant à l'huile et au réfrigérant de s'évacuer sous pression.

⚠ WARNING

CARBON-MONOXIDE POISONING HAZARD

Failure to follow instructions could result in severe personal injury or death due to carbon-monoxide poisoning, if combustion products infiltrate into the building.

Check that all openings in the outside wall around the vent (and air intake) pipe(s) are sealed to prevent infiltration of combustion products into the building.

Check that furnace vent (and air intake) terminal(s) are not obstructed in any way during all seasons.

⚠ AVERTISSEMENT

RISQUE D'INTOXICATION AU MONOXYDE DE CARBONE

Si ces directives ne sont pas suivies, cela peut entraîner des blessures graves ou une intoxication au monoxyde de carbone pouvant causer la mort, si des produits de combustion s'infiltrent dans le bâtiment.

Vérifier que toutes les ouvertures pratiquées dans le mur extérieur autour du ou des tuyaux d'évent (et de la prise d'air) sont scellées de manière à empêcher l'infiltration de produits de combustion dans le bâtiment.

Veiller à ce que la ou les sorties de l'évent de l'appareil de chauffage (et la prise d'air) ne soient, en aucune façon, obstruées, quelle que soit la saison.

⚠ WARNING

FIRE HAZARD

Failure to follow this warning could result in severe personal injury and/or property damage.

Inlet pressure tap set screw must be tightened and 1/8-in. NPT pipe plug must be installed to prevent gas leaks.

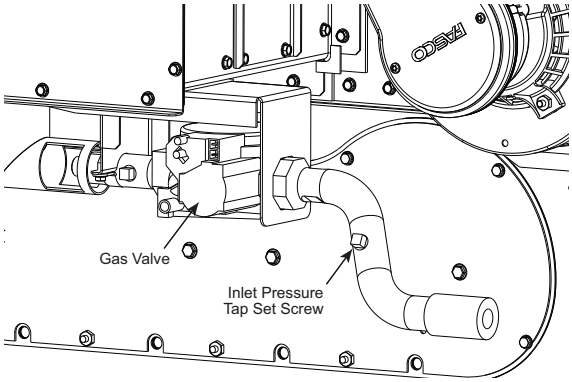

⚠ AVERTISSEMENT

RISQUE D'INCENDIE

Le non-respect de cet avertissement peut entraîner des blessures graves et/ou des dommages matériels.

La vis de réglage de la pression d'entrée doit être serrée et un bouchon fileté NPT de 1/8 po doit être installé pour éviter les fuites de gaz.

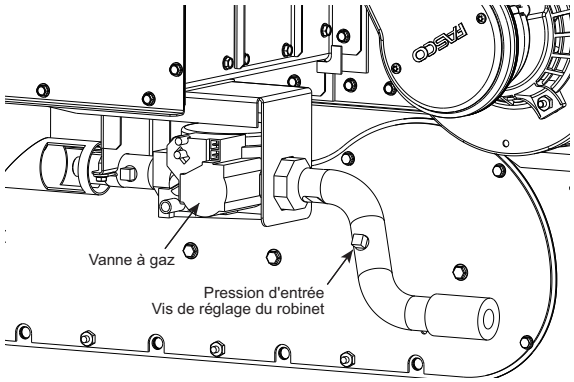

⚠ WARNING

FIRE HAZARD

Failure to follow this warning could result in severe personal injury and/or property damage.

Manifold pressure tap set screw must be tightened and 1/8-in. NPT pipe plug must be installed to prevent gas leaks.

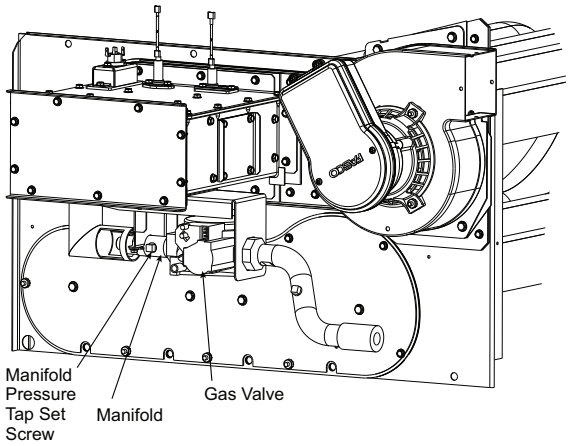

⚠ AVERTISSEMENT

RISQUE D'INCENDIE

Le non-respect de cet avertissement peut entraîner des blessures graves et/ou des dommages matériels.

La vis de réglage de la prise de pression du collecteur doit être serrée et un bouchon fileté NPT de 1/8 po doit être installé pour éviter les fuites de gaz.

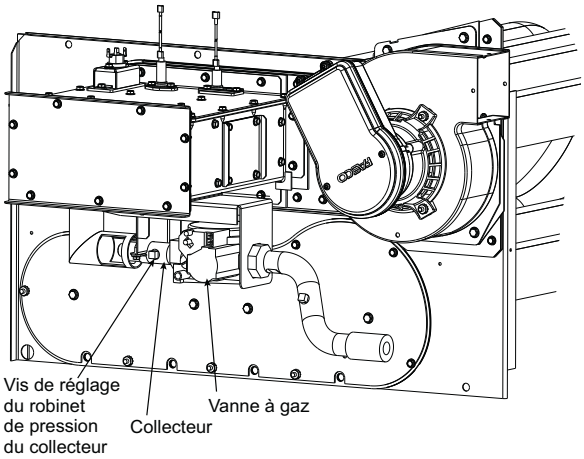

⚠ WARNING

UNIT OPERATION HAZARD

Failure to follow this warning can result in equipment damage.

Do Not adjust the inducer motor. The inducer motor is factory set; no field adjustment is required.

⚠ AVERTISSEMENT

DANGER LIÉ AU FONCTIONNEMENT DE L'APPAREIL

Le non-respect de cet avertissement peut endommager l'équipement.

Ne réglez pas le moteur d'induction. Le moteur d'induction est préréglé en usine ; aucun réglage sur site n'est nécessaire.

⚠ WARNING

FIRE OR EXPLOSION HAZARD

Failure to follow the safety warnings exactly could result in serious injury, death or property damage.

Never test for gas leaks with an open flame. Use a commercially available soap solution made specifically for the detection of leaks to check all connections. A fire or explosion may result causing property damage, personal injury or loss of life.

⚠ AVERTISSEMENT

RISQUE D'INCENDIE OU D'EXPLOSION

Si les consignes de sécurité ne sont pas suivies à la lettre, cela peut entraîner la mort, de graves blessures ou des dommages matériels.

Ne jamais vérifier la présence de fuites de gaz au moyen d'une flamme nue. Vérifier tous les raccords en utilisant une solution savonneuse commerciale conçue spécialement pour la détection de fuites. Un incendie ou une explosion risque de se produire, ce qui peut entraîner la mort, des blessures ou des dommages matériels.

⚠ CAUTION

PERSONAL INJURY HAZARD

Failure to follow this caution may result in personal injury.

Sheet metal parts may have sharp edges or burrs. Use care and wear appropriate protective clothing, safety glasses and gloves when handling parts and servicing air conditioning equipment.

⚠ CAUTION

UNIT OPERATION HAZARD

Failure to follow this warning can result in equipment damage.

Units can not operated with LP (liquid propane) gas under any circumstances.

⚠ AVERTISSEMENT

DANGER LIÉ À L'UTILISATION DE L'APPAREIL

Le non-respect de cet avertissement peut endommager l'équipement.

Ces appareils ne peuvent en aucun cas fonctionner au gaz GPL (propane liquide).

⚠ CAUTION

UNIT OPERATION HAZARD

Failure to follow this warning can result in equipment damage.

Units can not operated at altitudes greater than 7,800 feet under any circumstances.

⚠ AVERTISSEMENT

DANGER LIÉ À L'UTILISATION DE L'APPAREIL

Le non-respect de cet avertissement peut endommager l'équipement.

Les unités ne peuvent en aucun cas fonctionner à des altitudes supérieures à 2 377 mètres.

⚠ CAUTION

UNIT OPERATION HAZARD

Do not detach the burner box from the heat exchanger panel. If the burner box must be replaced, refer to the Service and Maintenance Instructions for the unit. Failure to follow this caution may result in equipment damage.

⚠ AVERTISSEMENT

DANGER LIÉ À L'UTILISATION DE L'APPAREIL

Ne détachez pas le brûleur du panneau de l'échangeur de chaleur. Si le brûleur doit être remplacé, reportez-vous aux instructions d'entretien et de maintenance de l'appareil. Le non-respect de cette consigne peut endommager l'équipement.

⚠ ATTENTION

A particular air odor may be experienced coming from the flue discharge during initial gas heating start up. This is normal and will subside after minimal use.

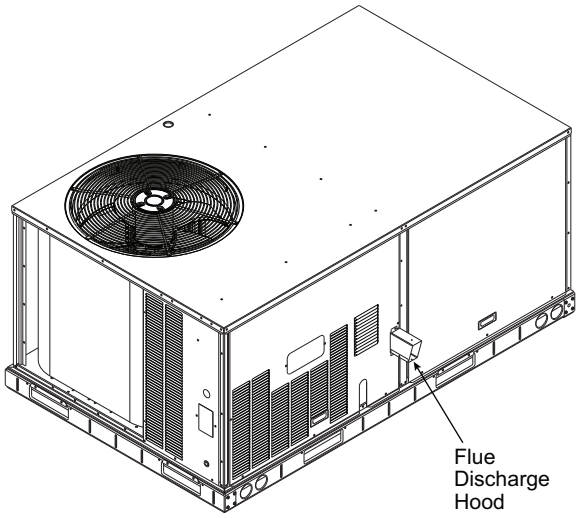

⚠ ATTENTION

Une odeur particulière peut se dégager de la cheminée lors de la mise en marche initiale du chauffage au gaz. Ceci est normal et disparaîtra après quelques utilisations.

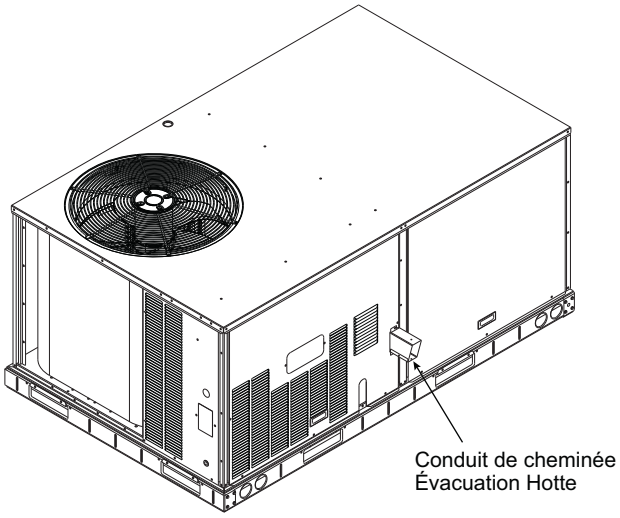

GENERAL

See Fig. 1 for 48QE(G/H) model number nomenclature. See Fig. 2 (on pages 7-9) for unit dimensional drawings and service clearance dimensions.

Rated Indoor Airflow

Table 1 lists the rated indoor airflow used for the AHRI efficiency rating for the units covered in this document.

Table 1 — Rated Indoor Airflow

MODEL NUMBER	RATED INDOOR AIRFLOW (cfm)
48QE(G/H)*04	1200
48QE(G/H)*05	1725
48QE(G/H)*06	1875

A2L REFRIGERATION INFORMATION

This equipment contains R-454B, a mildly flammable refrigerant classified as A2L. Read all instructions prior to transporting, storing, installing, or servicing this equipment.

Transportation

Follow all local, state, or federal regulations when transporting equipment containing A2L refrigerant. Carrier RTUs are designed to be transported on a flatbed trailer or flatbed rail car. Ensure the proper safety equipment, driver training, and any required trailer markings are in place prior to transporting equipment containing an A2L refrigerant. Units with an A2L refrigerant charge are not approved for air or cargo vessel transportation.

Position:	1	2	3	4	5	6	7	8	9	10	11	12	13	14	15	16	17	18
Example:	4	8	Q	E	G	M	0	5	A	2	A	6	-	3	A	0	A	0

Unit Heat Type
48 = Gas Heat Packaged Rooftop

Model Series - WeatherMaster®
QE = Mid Tier Hybrid Heat with Puron Advance™

Heat Type
G = Ultra Low NOx - Low Heat[a]
H = Ultra Low NOx - High Heat[a]

Refrigerant Options
M = Two-Stage Cooling/Single Circuit
N = Two-Stage Cooling/Single Circuit with Humidi-MiZer® System[b]

Cooling Tons
04 = 3.0 tons
05 = 4.0 tons
06 = 5.0 tons

Sensor Options
A = None
B = Return Air Smoke Detector (RA)
C = Supply Air Smoke Detector (SA)
D = RA + SA Smoke Detector
J = Condensate Overflow Switch (COFS)
K = Condensate Overflow Switch + RA Smoke Detector
L = Condensate Overflow Switch + RA and SA Smoke Detectors
M = Condensate Overflow Switch + SA Smoke Detector

Indoor Fan Options - Vane Axial EcoBlue Fan System
2 = Standard/Medium Static Motor
3 = High Static Motor
5 = Standard/Medium Static Motor, Filter Status Switch
6 = High Static Motor, Filter Status Switch

Coil Options – RTPF (Outdoor – Indoor – Hail Guard)
A = Al/Cu – Al/Cu
B = Precoat Al/Cu – Al/Cu[b]
C = E-coat Al/Cu – Al/Cu[b]
D = E-coat Al/Cu – E-coat Al/Cu[b]
M = Al/Cu – Al/Cu – Louvered Hail Guard[b]
N = Precoat Al/Cu – Al/Cu – Louvered Hail Guard[b]
P = E-coat Al/Cu – Al/Cu – Louvered Hail Guard[b]
Q = E-coat Al/Cu – E-coat Al/Cu – Louvered Hail Guards[b]
R = Cu/Cu – Al/Cu – Louvered Hail Guard[b]
S = Cu/Cu – Cu/Cu – Louvered Hail Guard[b]

Voltage
3 = 208/230-1-60
5 = 208/230-3-60
6 = 460-3-60

Design Revision
- = Factory Design Revision

Base Unit Controls
3 = SystemVu™ Controller

Intake / Exhaust Options
A = None
B = Temperature Economizer with Barometric Relief
F = Enthalpy Economizer with Barometric Relief
L = ULL (Ultra Low Leak) Temperature Economizer with Barometric Relief and CO_2 Sensor
M = ULL Enthalpy Economizer with Barometric Relief and CO_2 Sensor
U = ULL Temperature Economizer with Barometric Relief
W = ULL Enthalpy Economizer with Barometric Relief

Service Options
0 = None
1 = Unpowered Convenience Outlet (NPCO)
2 = Powered Convenience Outlet (PCO)
3 = Hinged Panels (HP)
4 = Hinged Panels + NPCO
5 = Hinged Access Panels + PCO
6 = MERV-13 Filters (M13)
7 = NPCO + MERV-13 Filters
8 = PCO + MERV-13 Filters
9 = Hinged Panels + MERV-13 Filters
A = HP + NPCO + MERV-13 Filters
B = HP + PCO + MERV-13 Filters
C = Foil Faced Insulation (FF)
D = FF + NPCO
E = FF + PCO
F = FF + HP
G = FF + HP + NPCO
H = FF + HP + PCO
J = FF + MERV-13 Filters
K = FF + NPCO + MERV-13 Filters
L = FF + PCO + MERV-13 Filters
M = FF + HP + MERV-13 Filters
N = FF + HP + NPCO + MERV-13 Filters
P = FF + HP + PCO + MERV-13 Filters

Electrical Options
A = None
B = HACR Breaker
C = Non-Fused Disconnect (NFDC)
D = Thru-The-Base Connections (TTB)
E = HACR +TTB
F = NFDC + TTB
N = Phase Monitor Protection (PMR)
P = PMR + HACR
Q = PMR + NFDC
R = PMR + TTB
S = PMR + HACR + TTB
T = PMR + NFDC + TTB
1 = HSCCR[c] (High Short Circuit Current Rating)
2 = HSCCR[c] + TTB

Packaging Compliance
0 = Standard

NOTE(S):
a Ultra Low NOx units include Stainless Steel Heat Exchanger.
b Not available for 208/230-1-60 voltage units.
c Not available on the following models/options: Head Pressure Control, Phase Loss Monitor, Non-Fused Disconnect, HACR Breaker, Powered Convenience Outlet, Humidi-MiZer System.

Fig. 1 — 48QE(G/H) 04-06 Model Number Nomenclature (Example)

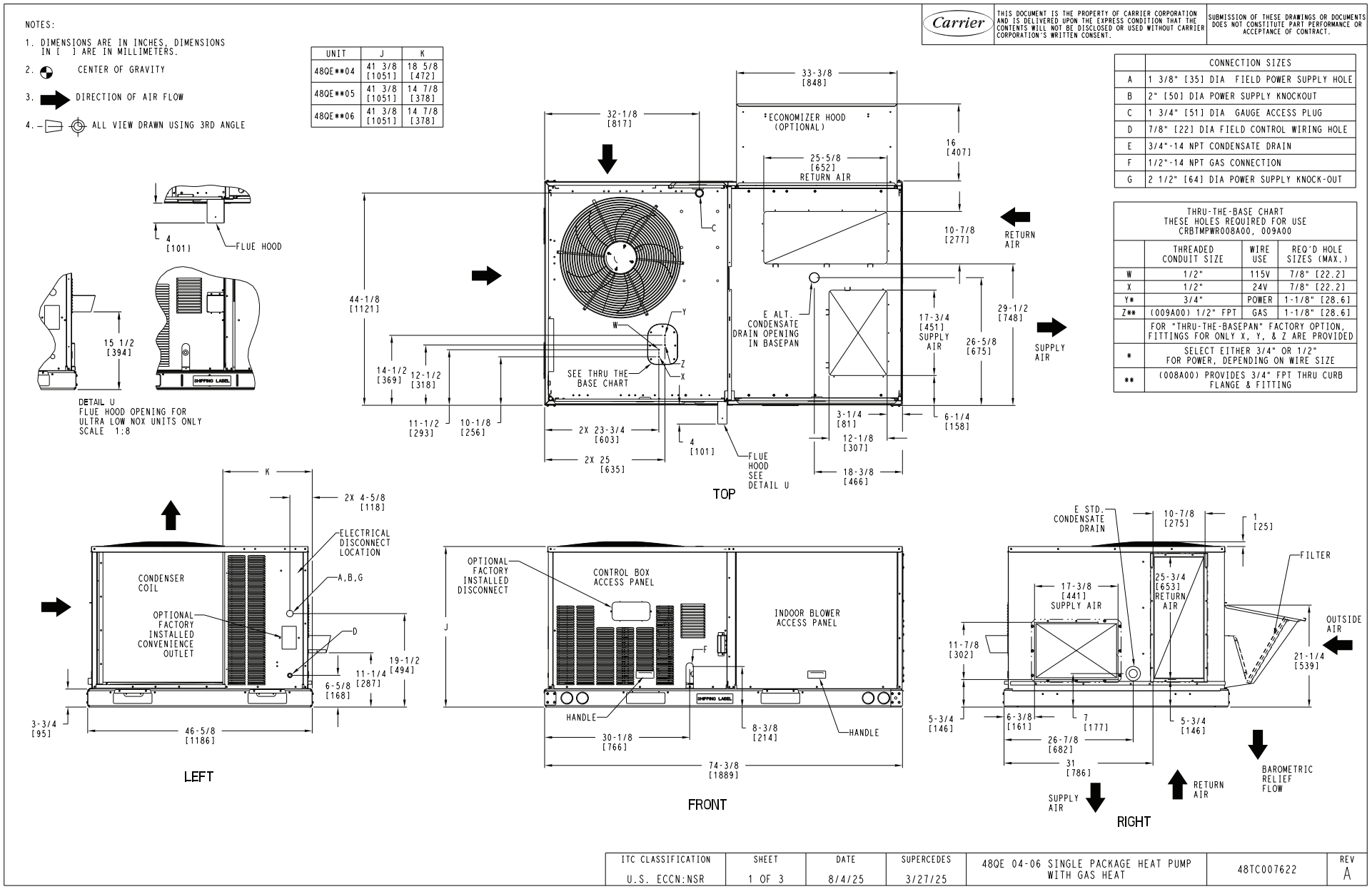

UNIT	J	K
48QE**04	41 3/8 [1051]	18 5/8 [472]
48QE**05	41 3/8 [1051]	14 7/8 [378]
48QE**06	41 3/8 [1051]	14 7/8 [378]

	CONNECTION SIZES
A	1 3/8" [35] DIA FIELD POWER SUPPLY HOLE
B	2" [50] DIA POWER SUPPLY KNOCKOUT
C	1 3/4" [51] DIA GAUGE ACCESS PLUG
D	7/8" [22] DIA FIELD CONTROL WIRING HOLE
E	3/4"-14 NPT CONDENSATE DRAIN
F	1/2"-14 NPT GAS CONNECTION
G	2 1/2" [64] DIA POWER SUPPLY KNOCK-OUT

THRU-THE-BASE CHART
THESE HOLES REQUIRED FOR USE
CRBTMPWR008A00, 009A00

	THREADED CONDUIT SIZE	WIRE USE	REQ'D HOLE SIZES (MAX.)
W	1/2"	115V	7/8" [22.2]
X	1/2"	24V	7/8" [22.2]
Y*	3/4"	POWER	1-1/8" [28.6]
Z**	(009A00) 1/2" FPT	GAS	1-1/8" [28.6]
	FOR "THRU-THE-BASEPAN" FACTORY OPTION, FITTINGS FOR ONLY X, Y, & Z ARE PROVIDED		
*	SELECT EITHER 3/4" OR 1/2" FOR POWER, DEPENDING ON WIRE SIZE		
**	(008A00) PROVIDES 3/4" FPT THRU CURB FLANGE & FITTING		

ITC CLASSIFICATION	SHEET	DATE	SUPERCEDES			REV
U.S. ECCN:NSR	1 OF 3	8/4/25	3/27/25	48QE 04-06 SINGLE PACKAGE HEAT PUMP WITH GAS HEAT	48TC007622	A

Fig. 2 — 48QE 04-06 Unit Dimensional Drawing

UNIT	STD. UNIT WEIGHT *		CORNER WEIGHT (A)		CORNER WEIGHT (B)		CORNER WEIGHT (C)		CORNER WEIGHT (D)		C.G.		HEIGHT
	LBS.	KG.	LBS.	KG.	LBS.	KG.	LBS.	KG.	LBS.	KG.	X	Y	Z
48QE**04	624	283	166	75	160	73	146	66	152	69	36 1/2 [927]	22 3/8 [568]	16 1/2 [419]
48QE**05	651	295	173	78	167	76	153	69	159	72	36 1/2 [927]	22 3/8 [568]	16 1/2 [419]
48QE**06	653	296	173	78	167	76	153	69	159	72	36 1/2 [927]	22 3/8 [568]	16 1/2 [419]

*- STANDARD UNIT WEIGHT IS WITH LOW GAS HEAT AND WITHOUT PACKAGING.
FOR OTHER OPTIONS AND ACCESSORIES REFER TO THE PRODUCT DATA CATALOG.

THIS TABLE IS FOR "ULTRA LOW NOX" UNITS ONLY

UNIT	STD. UNIT WEIGHT **		CORNER WEIGHT (A)		CORNER WEIGHT (B)		CORNER WEIGHT (C)		CORNER WEIGHT (D)		C.G.		HEIGHT
	LBS.	KG.	LBS.	KG.	LBS.	KG.	LBS.	KG.	LBS.	KG.	X	Y	Z
48QEG*04	654	297	170	77	163	74	157	71	164	74	36 3/8 [923]	23 [583]	16 1/2 [419]
48QEG*05	681	309	177	80	170	77	163	74	171	78	36 3/8 [923]	23 [583]	16 1/2 [419]
48QEG*06	683	310	178	81	170	77	164	74	171	78	36 3/8 [923]	23 [583]	16 1/2 [419]

**- STANDARD UNIT WEIGHT IS WITHOUT PACKAGING.
FOR OTHER OPTIONS AND ACCESSORIES REFER TO THE PRODUCT DATA CATALOG.

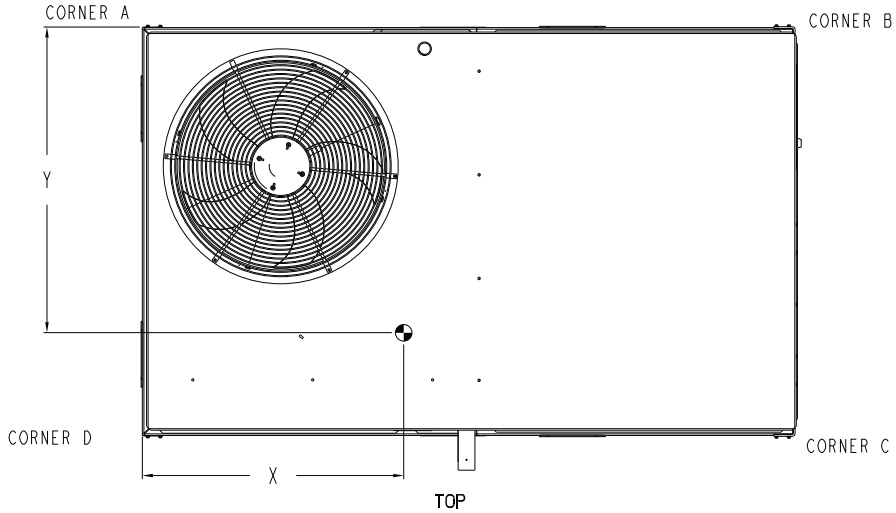

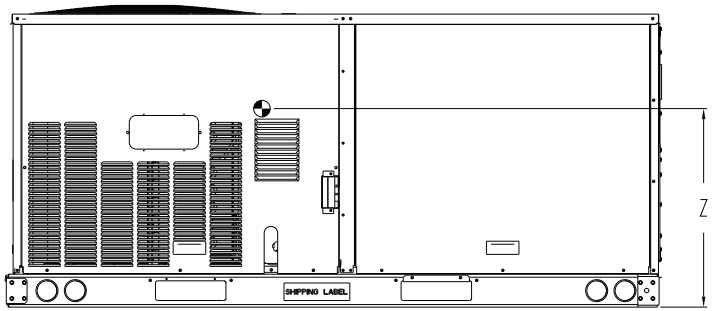

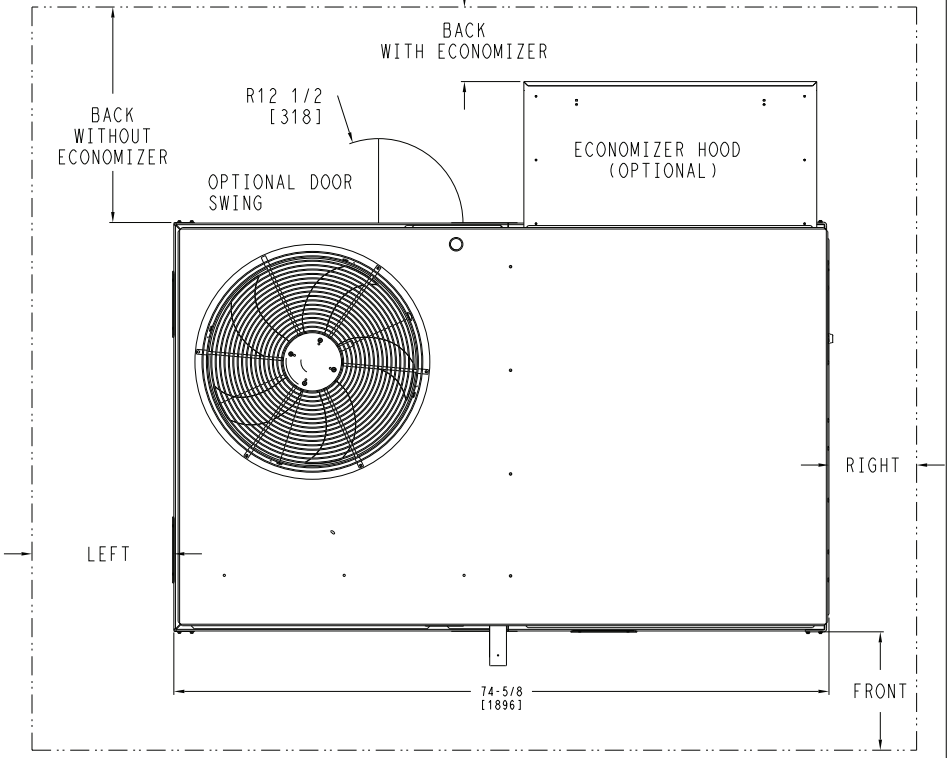

NOTES:

1. FOR ALL MINIMUM CLEARANCES LOCAL CODES OR JURISDICTIONS MAY PREVAIL.

CLEARANCE			
	SERVICE WITH:	SERVICE WITH:	OPERATING
SURFACE	CONDUCTIVE BARRIER	NONCONDUCTIVE BARRIER	CLEARANCE
FRONT	48 [1219mm]	36 [914mm]	18 [457mm]
LEFT	48 [1219mm]	42 [1067mm]	18 [457mm]
BACK W/O HOOD	48 [1219mm]	42 [1067mm]	18 [457mm]
BACK W/HOOD	36 [914mm]	36 [914mm]	18 [457mm]
RIGHT	36 [914mm]	36 [914mm]	18 [457mm]
TOP	72 [1829mm]	72 [1829mm]	72 [1829mm]

Carrier
THIS DOCUMENT IS THE PROPERTY OF CARRIER CORPORATION AND IS DELIVERED UPON THE EXPRESS CONDITION THAT THE CONTENTS WILL NOT BE DISCLOSED OR USED WITHOUT CARRIER CORPORATION'S WRITTEN CONSENT.
SUBMISSION OF THESE DRAWINGS OR DOCUMENTS DOES NOT CONSTITUTE PART PERFORMANCE OR ACCEPTANCE OF CONTRACT.

ITC CLASSIFICATION	SHEET	DATE	SUPERCEDES			REV
U.S. ECCN:NSR	2 OF 3	8/4/25	3/27/25	48QE 04-06 SINGLE PACKAGE HEAT PUMP WITH GAS HEAT	48TC007622	A

Fig. 2 — 48QE 04-06 Unit Dimensional Drawing (cont)

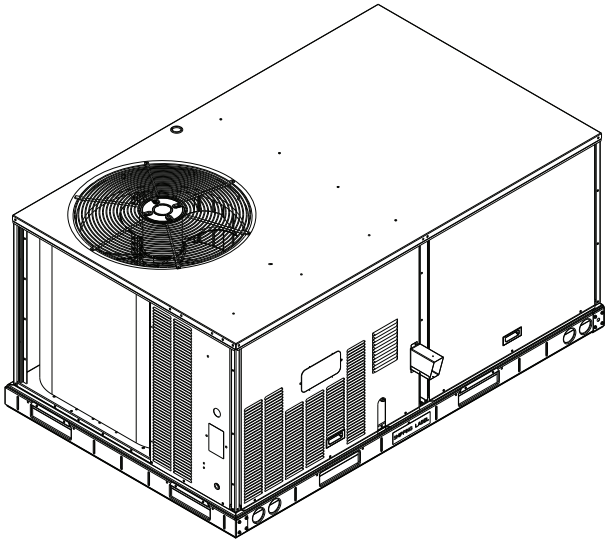

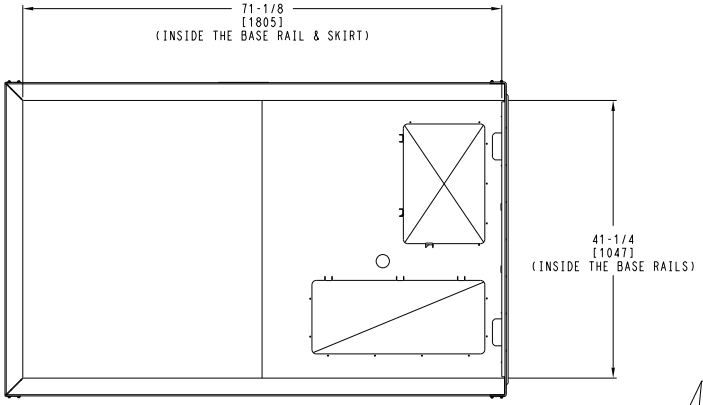

INSIDE BASERAIL DIMENSIONS

BOTTOM

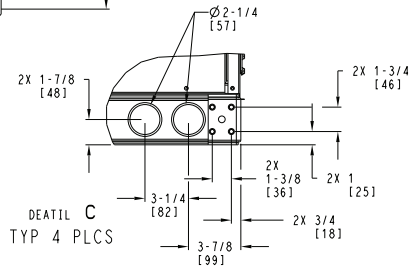

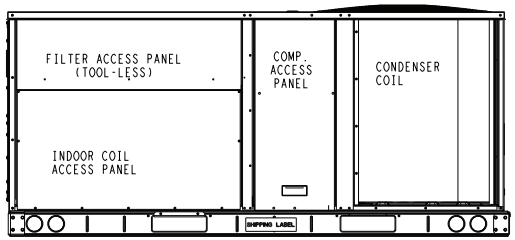

BACK

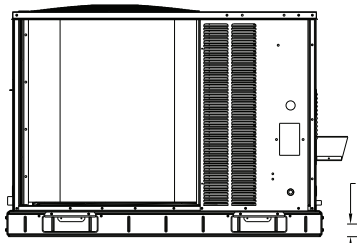

LEFT

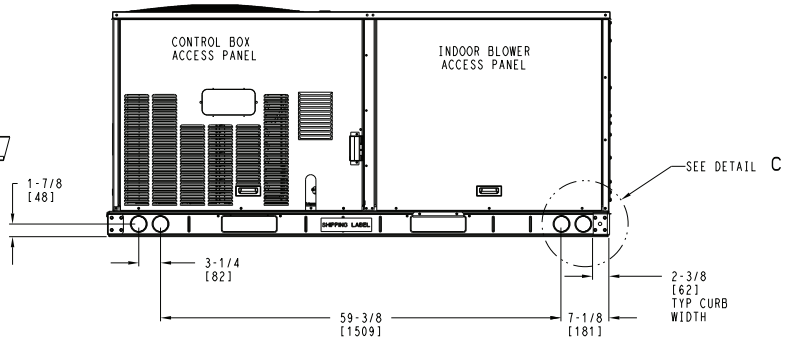

FRONT

ITC CLASSIFICATION	SHEET	DATE	SUPERCEDES			REV
U.S. ECCN:NSR	3 OF 3	8/4/25	3/27/25	48QE 04-06 SINGLE PACKAGE HEAT PUMP WITH GAS HEAT	48TC007622	A

Fig. 2 — 48QE 04-06 Unit Dimensional Drawing (cont)

INSTALLATION

Jobsite Survey

Complete the following checks before installation.

1. Consult local building codes and the NEC (National Electrical Code) ANSI/NFPA 70 for special installation requirements.
2. Determine unit location (from project plans) or select unit location.
3. Check for possible overhead obstructions which may interfere with unit lifting or rigging.

Step 1 — Plan for Unit Location

Select a location for the unit and its support system (curb or other) that provides for minimum clearances required for safety (including clearance to combustible surfaces), unit performance and service access below, around and above unit as specified in unit drawings. See Fig. 2 on page 8.

NOTE: Consider also the effect of adjacent units.

Be sure that unit is installed such that snow will not block the combustion intake or flue outlet.

Unit may be installed directly on wood flooring or on Class A, B, or C roof-covering material when roof curb is used.

Do not install unit in an indoor location. Do not locate air inlets near exhaust vents or other sources of contaminated air. For proper unit operation, adequate combustion and ventilation air must be provided in accordance with Section 5.3 (Air for Combustion and Ventilation) of the National Fuel Gas Code, ANSI Z223.1 (American National Standards Institute) and NFPA (National Fire Protection Association) 54 TIA-54-84-1. In Canada, installation must be in accordance with the CAN1-B149 installation codes for gas burning appliances.

Although unit is weatherproof, avoid locations that permit water from higher level runoff and overhangs to fall onto the unit.

Locate mechanical draft system flue assembly at least 4 ft (1.2 m) from any opening through which combustion products could enter the building, and at least 4 ft (1.2 m) from any adjacent building (or per local code). Locate the flue assembly at least 10 ft (3.05 m) from an adjacent unit's fresh air intake hood if within 3 ft (0.91 m) of same elevation (or per local code). When unit is located adjacent to public walkways, flue assembly must be at least 7 ft (2.1 m) above grade.

Select a unit mounting system that provides adequate height to allow installation of condensate trap per requirements. Refer to "Install External Condensate Trap and Line" on page 19 for required trap dimensions.

ROOF MOUNT

Check building codes for weight distribution requirements. Unit operating weight is shown in Table 2.

Table 2 — Operating Weights

48QE(G/H)	UNIT lb (kg)		
	04	05	06
Base Unit	654 (297)	681 (309)	683 (310)
Economizer	51 (23)	51 (23)	51 (23)
Powered Outlet	36 (16)	36 (16)	36 (16)
Curb			
14 in. (356 mm)	115 (52)	115 (52)	115 (52)
24 in. (610 mm)	197 (89)	197 (89)	197 (89)

Step 2 — Plan for Sequence of Unit Installation

The support method used for this unit will dictate different sequences for the steps of unit installation. For example, on curb-mounted units, some accessories must be installed on the unit before the unit is placed on the curb. Review the following for recommended sequences for installation steps.

CURB-MOUNTED INSTALLATION

1. Install curb.
2. Install field-fabricated ductwork inside curb.
3. Install accessory thru-base service connection package (affects curb and unit) (refer to accessory installation instructions for details).
4. Prepare bottom condensate drain connection to suit planned condensate line routing (refer to Install External Condensate Trap and Line on page 19 for details).
5. Rig and place unit.
6. Install outdoor air hood.
7. Install flue hood.
8. Install gas piping.
9. Install condensate line trap and piping.
10. Make electrical connections.
11. Install other accessories.

PAD-MOUNTED INSTALLATION

1. Prepare pad and unit supports.
2. Check and tighten the bottom condensate drain connection plug.
3. Rig and place unit.
4. Convert unit to side duct connection arrangement.
5. Install field-fabricated ductwork at unit duct openings.
6. Install outdoor air hood.
7. Install flue hood.
8. Install gas piping.
9. Install condensate line trap and piping.
10. Make electrical connections.
11. Install other accessories.

FRAME-MOUNTED INSTALLATION

Frame-mounted applications generally follow the sequence for a curb installation. Adapt as required to suit specific installation plan.

Step 3 — Inspect Unit

Inspect unit for transportation damage. File any claim with transportation agency.

Confirm before installation of unit that voltage, amperage and circuit protection requirements listed on unit data plate agree with power supply provided.

On units with hinged panel option, check to be sure all latches are snug and in closed position.

Locate the carton containing the outside air hood parts. Do not remove carton until unit has been rigged and located in final position.

Step 4 — Provide Unit Support

ROOF CURB MOUNT

Accessory roof curb details and dimensions are shown in Fig. 3 (on page 11). Assemble and install accessory roof curb in accordance with instructions shipped with the curb.

ROOF CURB ACCESSORY #	A
CRRFCURB001A01	14" [356]
CRRFCURB002A01	24" [610]

NOTES:
1. ROOFCURB ACCESSORY IS SHIPPED DISASSEMBLED.
2. INSULATED PANELS: 25.4 [1"] THK. POLYURETHANE FOAM, 44.5 [1-3/4] # DENSITY.
3. DIMENSIONS IN [ ] ARE IN MILLIMETERS.
4. ROOFCURB: 18 GAGE STEEL.
5. ATTACH DUCTWORK TO CURB. (FLANGES OF DUCT REST ON CURB).
6. SERVICE CLEARANCE 4 FEET ON EACH SIDE.
7. ▨ DIRECTION OF AIR FLOW.
8. CONNECTOR PACKAGE CRBTMPWR001A01 IS FOR THRU-THE-CURB GAS TYPE PACKAGE CRBTMPWR003A01 IS FOR THRU-THE-BOTTOM TYPE GAS CONNECTIONS.

CONNECTOR PKG. ACC.	GAS CONNECTION TYPE	GAS FITTING	POWER WIRING FITTING	CONTROL WIRING FITTING	ACCESSORY CONVENIENCE OUTLET WIRING CONNECTOR
CRBTMPWR001A01	THRU THE CURB	3/4" [19] NPT	3/4" [19] NPT	1/2" [12.7] NPT	1/2" [12.7] NPT
CRBTMPWR003A01	THRU THE BOTTOM	1/2" [12.7] NPT			

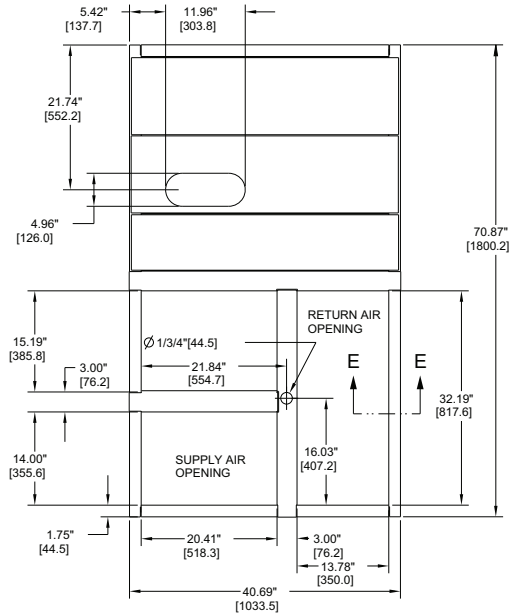

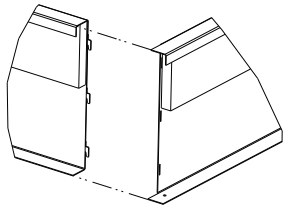

VIEW "B"
CORNER DETAIL

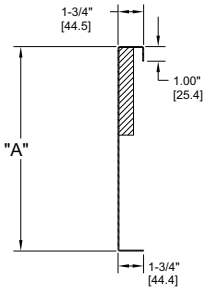

SECTION E-E
SCALE 0.250

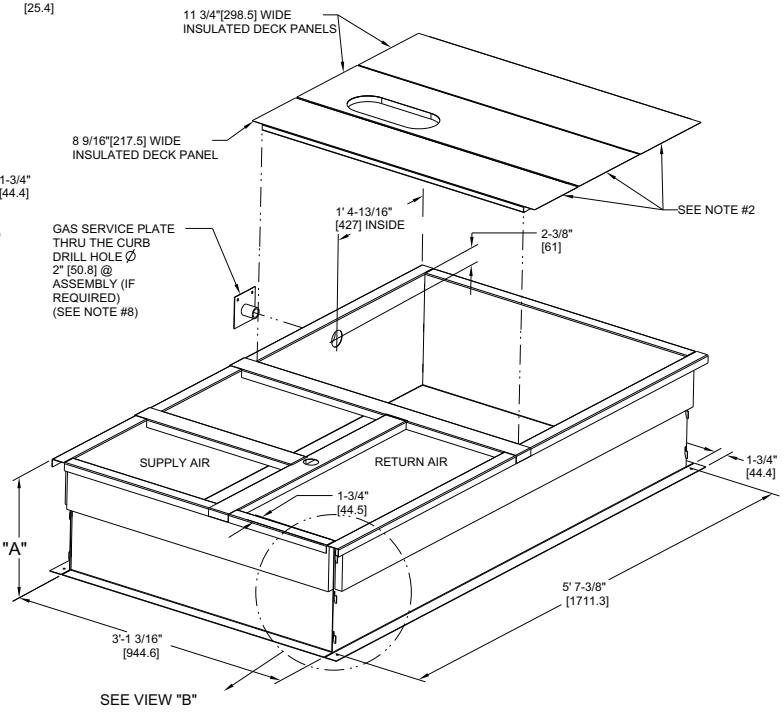

CERTIFIED DRAWING

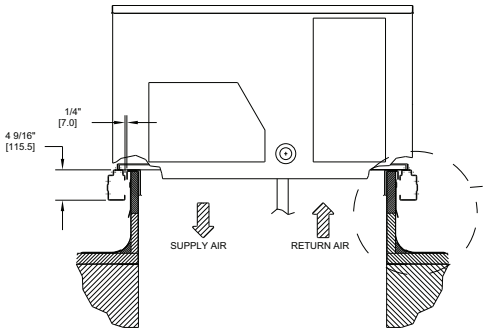

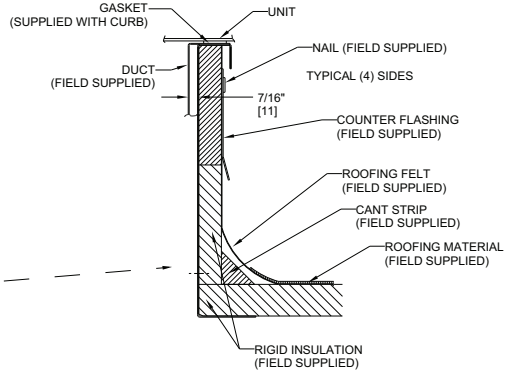

REV	REVISION RECORD	DATE	BY	CHK'D	APP'D	ECN NO.
A	OVERALL DIM. 5'-7 3/8" WAS 5'-7 7/8; 18GA MATERIAL WA 16 GA.; NAIL FIELD SUPPLIED WAS WITH CURB	04/22/13	MMC	-	-	1067898

DRAWING RELEASE LEVEL: PRODUCTION			
THIRD ANGLE PROJECTION	UNLESS OTHERWISE SPECIFIED DIMENSIONS ARE IN INCHES TOLERANCES ON: 1 DEC ± - 2 DEC ± - 3 DEC ± - ANG ± °		
MATERIAL - - -	AUTHORIZATION NUMBER 1041738	TITLE CURB ASY, ROOF	
ENGINEERING REQUIREMENTS T-005, Y-002	ENGINEERING - - MANUFACTURING - -	SIZE D	DRAWING NUMBER 48TC400427 SHEET 5 OF 5 / REV B
WEIGHT: -	DRAFTER MMC 06/17/11 CHECKER - -		
SURFACE FINISH - / MFG/PURCH PURCH	MODEL (INTERNAL USE ONLY)	NEXT DRAWING - / SCALE N/A	DISTRIBUTION MMC

Fig. 3 — Roof Curb Details

NOTE: The gasketing of the unit to the roof curb is critical for a watertight seal. Install gasket supplied with the roof curb as shown in Fig. 3. Improperly applied gasket can also result in air leaks and poor unit performance.

Curb should be level. This is necessary for unit drain to function properly. Unit leveling tolerances are shown in Fig. 4. Refer to Accessory Roof Curb Installation Instructions for additional information as required.

Install insulation, cant strips, roofing felt, and counter flashing as shown. Ductwork must be attached to curb and not to the unit. The accessory thru-the-base power and gas connection package must be installed before the unit is set on the roof curb. If field-installed thru-the-roof curb gas connections are desired, use factory-supplied 1/2 in. pipe coupling and gas plate assembly to mount the thru-the-roof curb connection to the roof curb. Gas connections and power connections to the unit must be field-installed after the unit is installed on the roof curb.

NOTE: If electric and control wiring is to be routed through the basepan, attach the accessory thru-the-base service connections to the basepan in accordance with the accessory installation instructions.

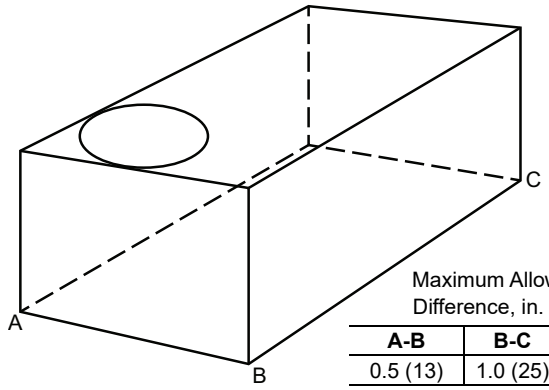

Maximum Allowable Difference, in. (mm)

A-B	B-C	A-C
0.5 (13)	1.0 (25)	1.0 (25)

Fig. 4 — Unit Leveling Tolerances

SLAB MOUNT (HORIZONTAL UNITS ONLY)

Provide a level concrete slab that extends a minimum of 6 in. (150 mm) beyond unit cabinet. Install a gravel apron in front of condenser coil air inlet to prevent grass and foliage from obstructing airflow.

NOTE: Horizontal units may be installed on a roof curb if required.

ALTERNATE UNIT SUPPORT (IN LIEU OF CURB OR SLAB MOUNT)

A non-combustible sleeper rail can be used in the unit curb support area. If sleeper rails cannot be used, support the long sides of the unit with a minimum of 3 equally spaced 4 in. x 4 in. (102 mm x 102 mm) pads on each side.

Step 5 — Field Fabricate Ductwork

Cabinet return-air static pressure (a negative condition) shall not exceed 0.35 in. wg (87 Pa) with economizer or 0.45 in. wg (112 Pa) without economizer.

For vertical ducted applications, secure all ducts to roof curb and building structure. *Do not connect ductwork to unit.*

Fabricate supply ductwork so that the cross sectional dimensions are equal to or greater than the unit supply duct opening dimensions for the first 18 in. (458 mm) of duct length from the unit basepan.

Insulate and weatherproof all external ductwork, joints, and roof openings with counter flashing and mastic in accordance with applicable codes.

Ducts passing through unconditioned spaces must be insulated and covered with a vapor barrier.

If a plenum return is used on a vertical unit, the return should be ducted through the roof deck to comply with applicable fire codes.

⚠ CAUTION

PROPERTY DAMAGE HAZARD

Failure to follow this caution may result in damage to roofing materials.

Membrane roofs can be cut by sharp sheet metal edges. Be careful when placing any sheet metal parts on such roof.

⚠ WARNING

PERSONAL INJURY HAZARD

Failure to follow this warning could cause personal injury.

For vertical supply and return units, tools or parts could drop into ductwork and cause an injury. Install a 90 degree turn in the return ductwork between the unit and the conditioned space. If a 90 degree elbow cannot be installed, then a grille of sufficient strength and density should be installed to prevent objects from falling into the conditioned space.

Step 6 — Rig and Place Unit

Keep unit upright and do not drop. Spreader bars are required. Rollers may be used to move unit across a roof. Level by using unit frame as a reference. See Table 2 on page 10 and Fig. 5 on page 13 for additional information.

Lifting holes are provided in base rails as shown in Fig. 5. Refer to rigging instructions on unit.

Rigging materials under unit (cardboard or wood to prevent base pan damage) must be removed PRIOR to placing the unit on the roof curb.

When using the standard side drain connection, ensure the red plug in the alternate bottom connection is tight. Do this before setting the unit in place. The red drain pan can be tightened with a 1/2-in. square socket drive extension. For further details see Step 12 — Install External Condensate Trap and Line on page 19.

Before setting the unit onto the curb, recheck gasketing on curb.

⚠ CAUTION

UNIT DAMAGE HAZARD

Failure to follow this caution may result in equipment damage.

All panels must be in place when rigging. Unit is not designed for handling by fork truck when packaging is removed.

If using top crate as spreader bar, once unit is set, carefully lower wooden crate off building roof top to ground. Ensure that no people or obstructions are below prior to lowering the crate.

POSITIONING ON CURB

Position unit on roof curb so that the following clearances are maintained: 1/4 in. (6.4 mm) clearance between the roof curb and the base rail inside the front and back, 0.0 in. clearance between the roof curb and the base rail inside on the duct end of the unit. This will result in the distance between the roof curb and the base rail inside on the condenser end of the unit being approximately 1/4 in. (6.4 mm).

Although unit is weatherproof, guard against water from higher level runoff and overhangs.

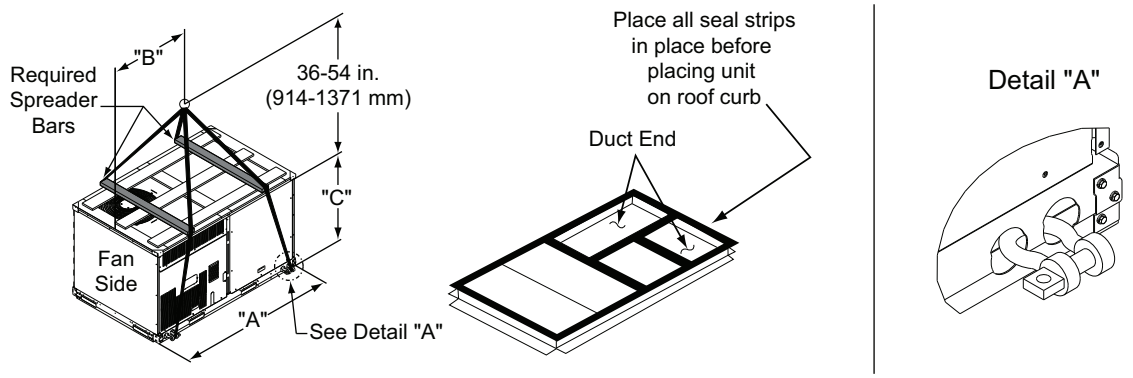

NOTE(S):
1. SPREADER BARS ARE REQUIRED. Top damage will occur if spreader bars are not used.
2. Hook rigging shackles through holes in base rail, as shown in Detail A. Holes in base rails are centered around the unit center of gravity. Use wooden top to prevent rigging straps from damaging unit.

UNIT	MAX WEIGHT		DIMENSIONS					
			A		B		C	
	lb	kg	in.	mm	in.	mm	in.	mm
48QE(G/H)*04	1069	485	74.5	1890	36.3	920	41.5	1055
48QE(G/H)*05	1106	502	74.5	1890	36.3	920	41.5	1055
48QE(G/H)*06	1108	503	74.5	1890	36.3	920	41.5	1055

Fig. 5 — Rigging Details

Flue vent discharge must have a minimum horizontal clearance of 4 ft (1220 mm) from electric and gas meters, gas regulators, and gas relief equipment. Minimum distance between unit and other electrically live parts is 48 in. (1220 mm).

Flue gas can deteriorate building materials. Orient unit such that flue gas will not affect building materials. Locate mechanical draft system flue assembly at least 48 in. (1220 mm) from an adjacent building or combustible material.

NOTE: Installation of accessory flue discharge deflector kit will reduce the minimum clearance to combustible material to 18 in. (460 mm).

After unit is in position, remove rigging skids and shipping materials.

Step 7 — Convert to Horizontal and Connect Ductwork (when required)

Unit is shipped in the vertical duct configuration. Unit without factory-installed economizer or return-air smoke detector option may be field-converted to horizontal ducted configuration. To convert to horizontal configuration, remove screws from side duct opening covers (see Fig. 6) and remove covers. Use the screws to install the covers on vertical duct openings with the insulation-side down. The panels must be inserted into the notches on the basepan to properly seal. The notches are covered by the tape used to secure the insulation to the basepan and are not easily seen. See Fig. 7 for position of the notches in the basepan. Seals around duct openings must be tight. Secure with screws as shown in Fig. 8. Cover seams with foil duct tape.

Field-supplied flanges should be attached to horizontal duct openings and all ductwork should be secured to the flanges. Insulate and weatherproof all external ductwork, joints, and roof or building openings with counter flashing and mastic in accordance with applicable codes.

Do not cover or obscure visibility to the unit's informative data plate when insulating horizontal ductwork.

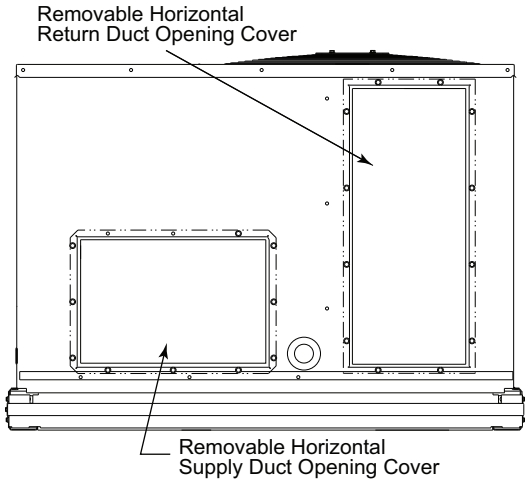

Fig. 6 — Horizontal Conversion Panels

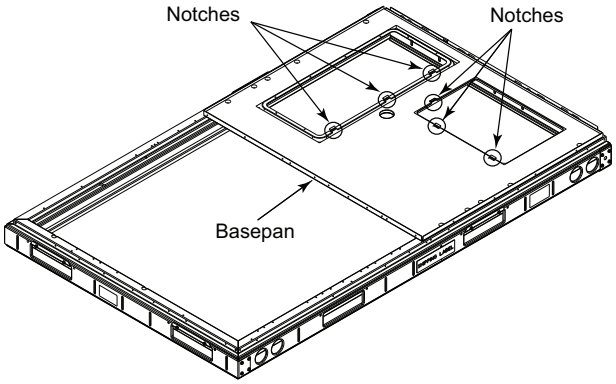

Fig. 7 — Location of Notches

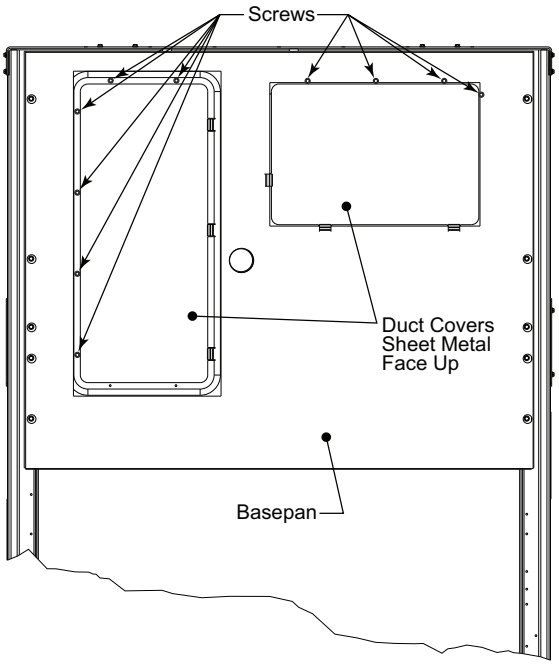

Fig. 8 — Horizontal Duct Panels In Place

Step 8 — Install Outside Air Hood

ECONOMIZER HOOD PACKAGE REMOVAL (FACTORY OPTION)

NOTE: Economizer is not available as factory installed options for single phase (-3 voltage code) models.

The hood is shipped in knock-down form and must be field assembled. The indoor coil access panel is used as the hood top while the hood sides, divider and filter are packaged together, attached to a metal support tray using plastic stretch wrap, and shipped in the return air compartment behind the indoor coil access panel. The hood assembly's metal tray is attached to the basepan and also attached to the damper using two plastic tie-wraps.

1. To gain access to the hood, remove the filter access panel. (See Fig. 9.)

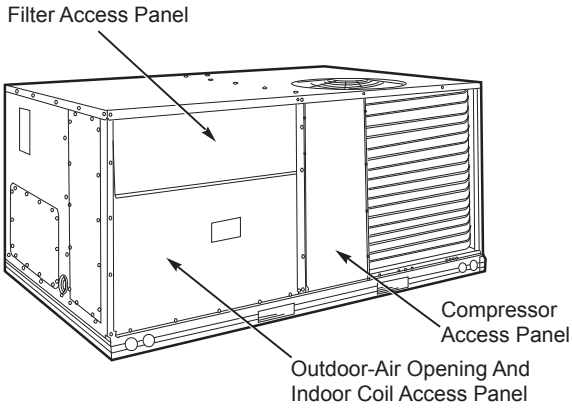

Fig. 9 — Typical Access Panel Locations

2. Locate the (2) screws holding the metal tray to the basepan and remove. Locate and cut the (2) plastic tie-wraps securing the assembly to the damper. (See Fig. 10.) Be careful to not damage any wiring or cut tie-wraps securing any wiring.

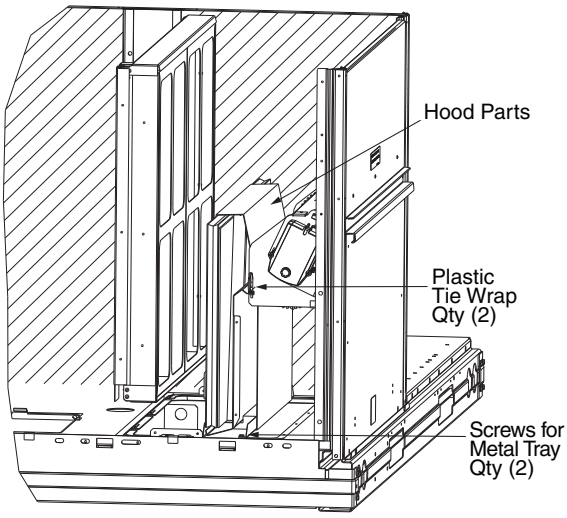

Fig. 10 — Economizer Hood Parts Location

3. Carefully lift the hood assembly (with metal tray) through the filter access opening and assemble per the steps outlined in the following section *Economizer Hood Setup.*

ECONOMIZER HOOD SETUP

NOTE: If the power exhaust accessory is to be installed on the unit, the hood shipped with the unit will not be used and must be discarded. Save the aluminum filter for use in the power exhaust hood assembly.

1. The indoor coil access panel will be used as the top of the hood. Remove the screws along the sides and bottom of the indoor coil access panel. See Fig. 11.

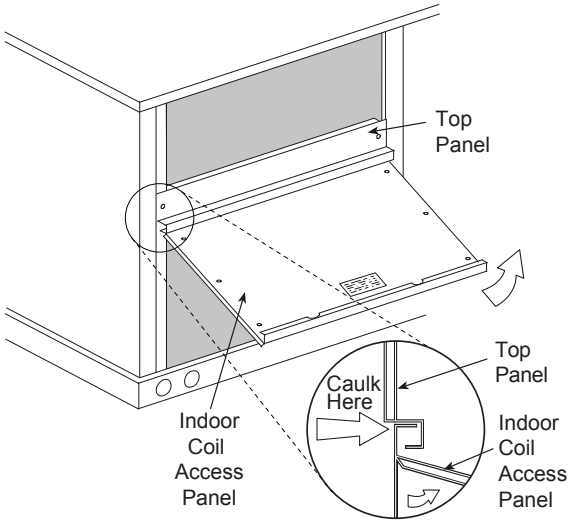

Fig. 11 — Indoor Coil Access Panel Relocation

2. Swing out indoor coil access panel and insert the hood sides under the panel (hood top). Use the screws provided to attach the hood sides to the hood top. Use screws provided to attach the hood sides to the unit. See Fig. 12.

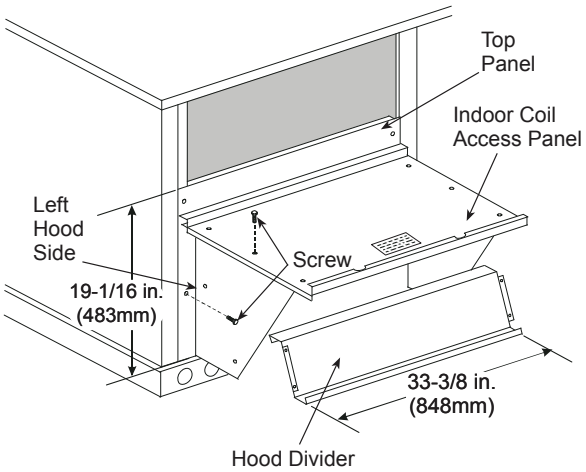

Fig. 12 — Economizer Hood Construction

3. Remove the shipping tape holding the economizer barometric relief damper in place (economizer only).
4. Insert the hood divider between the hood sides. See Fig. 12 and 13. Secure hood divider with 2 screws on each hood side. The hood divider is also used as the bottom filter rack for the aluminum filter.
5. Open the filter clips which are located underneath the hood top. Insert the aluminum filter into the bottom filter rack (hood divider). Push the filter into position past the open filter clips. Close the filter clips to lock the filter into place. See Fig. 13.
6. Caulk the ends of the joint between the unit top panel and the hood top.
7. Replace the filter access panel.

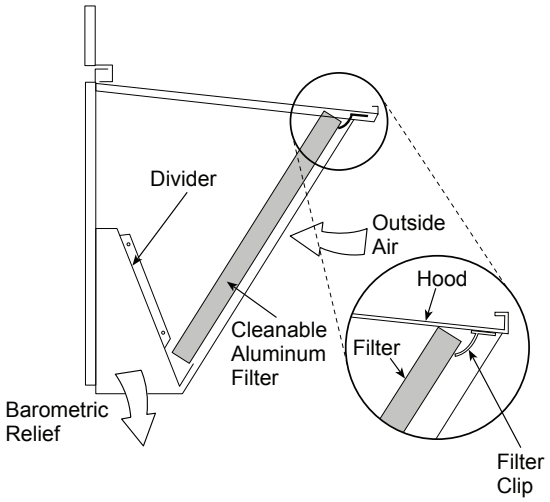

Fig. 13 — Economizer Filter Installation

Step 9 — Units with Hinged Panels Only

If the unit does not have hinged panels, skip this step and continue at Step 10.

Relocate latch shipped inside the compressor compartment behind the hinged compressor door to location shown in Fig. 14 after unit installation.

Step 10 — Install Flue Hood

Flue hood is shipped screwed to the basepan beside the burner compartment access panel. Remove from shipping location and using screws provided, install flue hood and screen in location shown in Fig. 15.

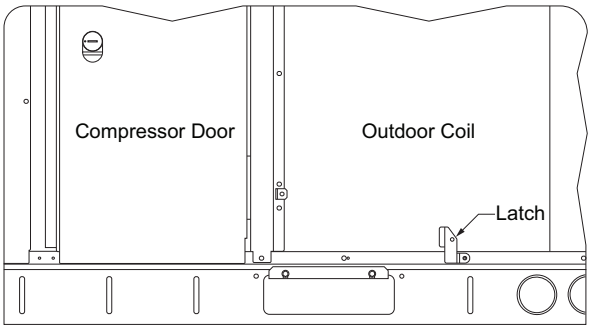

Fig. 14 — Compressor Door Latch Location

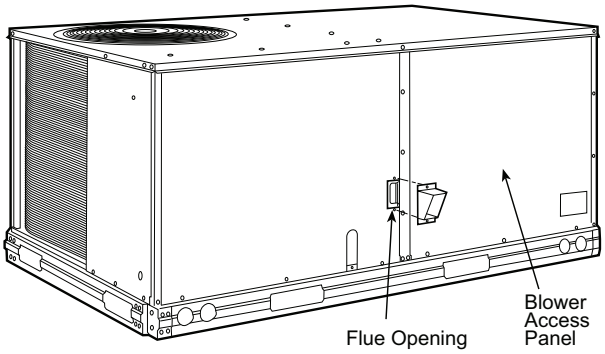

Fig. 15 — Flue Hood Details

Step 11 — Install Gas Piping

Installation of the gas piping must be accordance with local building codes and with applicable national codes. In U.S.A., refer to NFPA 54/ANSI Z223.1 National Fuel Gas Code (NFGC). In Canada, installation must be accordance with the CAN/CSA B149.1 and CAN/CSA B149.2 installation codes for gas burning appliances.

This unit is factory equipped for use with Natural Gas (NG) fuel at elevations up to 7,800 ft (2377 m) above sea level.

Furnace gas input rate on rating plate is for installation up to 7,800 ft (2377 m) above sea level.

⚠ CAUTION

Units cannot operated at altitudes greater than 7,800 feet above mean sea level (AMSL) under any circumstances.

Gas pressure at unit gas connection must not be less than 5 in. wg (1.246 kPa) or greater than 13 in. wg (3.23 kPa) while the unit is operating. See Table 3.

Table 3 — Natural Gas Supply Line Pressure Ranges

UNIT MODEL	UNIT SIZE	MINIMUM	MAXIMUM
48QE(G/H)	04, 05, 06	5.0 in. wg (1246 Pa)	13.0 in. wg (3240 Pa)

The gas supply pipe enters the unit at the burner access panel on the front side of the unit, through the long slot at the bottom of the access panel. The gas connection to the unit is made to the 1/2 in. FPT gas inlet port on the unit gas valve.

Manifold pressure is factory-adjusted for natural gas fuel use. See Table 4.

Table 4 — Natural Gas Manifold Pressure

UNIT MODEL	UNIT SIZE	PRESSURE
48QE(G/H)	04, 05, 06	3.2 in. wg (797 Pa)

⚠CAUTION

EQUIPMENT DAMAGE

Failure to follow this caution may result in equipment damage.

When connecting the gas line to the unit gas valve, the installer MUST use a backup wrench to prevent damage to the valve.

Install a gas supply line that runs to the unit heating section. Refer to the NFPA 54/NFGC or equivalent code for gas pipe sizing data. Do not use a pipe size smaller than 1/2 inch. Size the gas supply line to allow for a maximum pressure drop of 0.5 in. wg (124 Pa) between gas regulator source and unit gas valve connection when unit is operating at high-fire flow rate.

The gas supply line can approach the unit in 3 ways: horizontally from outside the unit (across the roof), thru-curb/under unit basepan (accessory kit required), or through unit basepan (factory option or accessory kit required). Consult accessory kit installation instructions for details on these installation methods. Observe clearance to gas line components per Fig. 16.

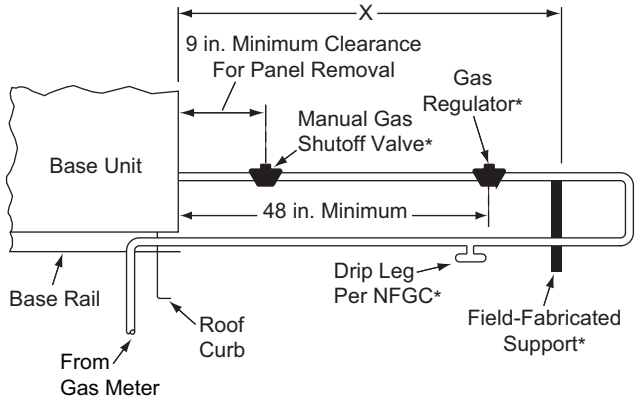

LEGEND
NFGC — National Fuel Gas Code

NOTE: Follow all local codes.
*Field-installed.

STEEL PIPE NOMINAL DIAMETERS (in.)	SPACING OF SUPPORTS X DIMENSION (ft)
1/2	6
3/4 or 1	8
1-1/4 or larger	10

Fig. 16 — Gas Piping Guide (with Accessory Thru-the-Curb Service Connections)

FACTORY OPTION THRU-BASE CONNECTIONS (GAS CONNECTIONS)

This service connection kit consists of a 1/2 in. electrical bulkhead connector and a 3/4 in. electrical bulkhead connector, connected to an "L" bracket covering the embossed (raised) section of the unit basepan in the condenser section (see Fig. 17 for shipping position).

The 3/4 in. bulkhead connector enables the low-voltage control wires to pass through the basepan. The 1/2 in. bulkhead connector allows the high-voltage power wires to pass through the basepan. See Fig. 18.

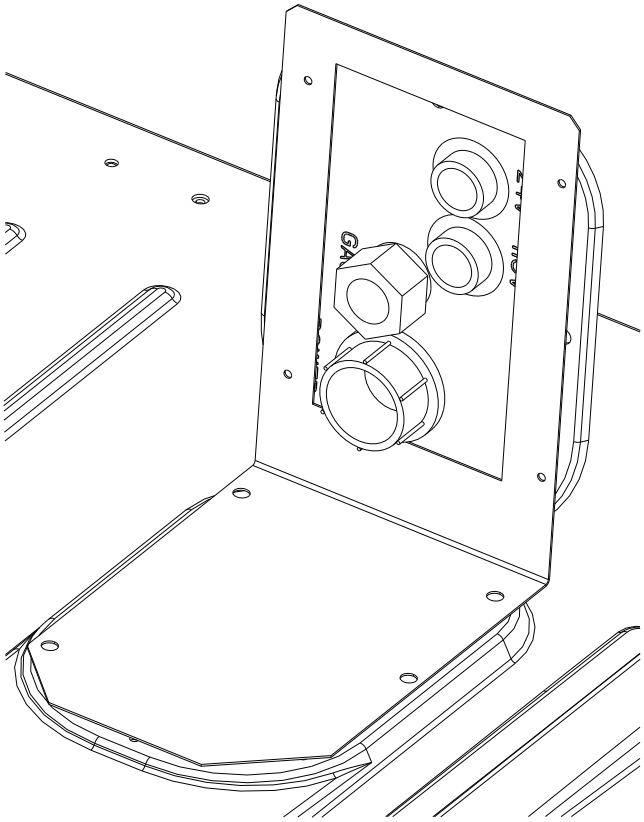

Fig. 17 — Thru-the-Base Fitting Assembly (Shown in Shipping Position)

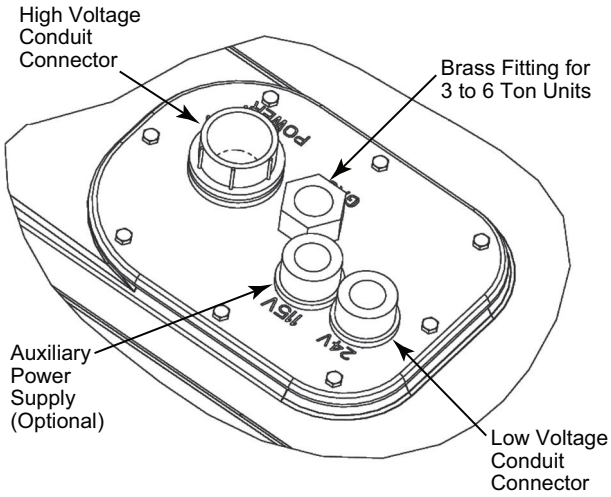

Fig. 18 — Thru-Base Connection Fittings

To prepare the unit for thru-base connections:

1. Remove the "L" bracket assembly from the unit.
2. Remove connector plate assembly from the "L" bracket and discard the "L" bracket, but retain the washer head screws and the gasket (located between the "L" bracket and the connector plate assembly).

NOTE: Take care not to damage the gasket, as it is reused in the following step.

3. Place the gasket over the embossed area in the basepan, aligning the holes in the gasket to the holes in the basepan. See Fig. 18.
4. Install the connector plate assembly to the basepan using 8 of the washer head screws.

The thru-base gas connector has male and female threads. The male threads protrude above the basepan of the unit; the female threads protrude below the basepan.

Check tightness of connector lock nuts before connecting gas piping.

Install a 1/2 in. NPT street elbow on the thru-base gas fitting. Attach a 1/2 in. pipe nipple with minimum length of 16 in. (406 mm) (field-supplied) to the street elbow and extend it through the access panel at the gas support bracket. See Fig. 19.

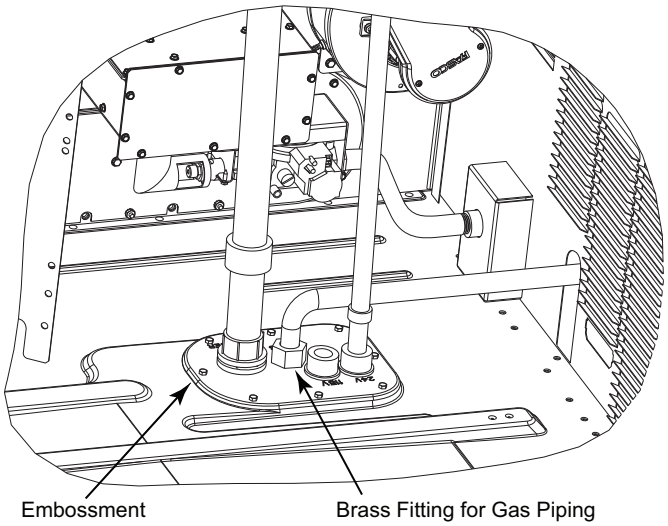

Fig. 19 — Gas Line Piping

Other hardware required to complete the installation of the gas supply line includes a manual shutoff valve, a sediment trap (drip leg) and a ground-joint union. A pressure regulator valve may also be required (to convert gas pressure from pounds to inches of pressure). The manual shutoff valve must be located within 6 ft (1.83 m) of the unit. The union, located in the final leg entering the unit, must be located at least 9 in. (230 mm) away from the access panel to permit the panel to be removed for service. If a regulator valve is installed, it must be located a minimum of 4 ft (1220 mm) away from the unit's flue outlet. Some municipal codes require that the manual shutoff valve be located upstream of the sediment trap. See Fig. 20 and 21 for typical piping arrangements for gas piping that has been routed through the sidewall of the curb. See Fig. 22 for typical piping arrangement when thru-base is used. Ensure that all piping does not block access to the unit's main control box or limit the required working space in front of the control box.

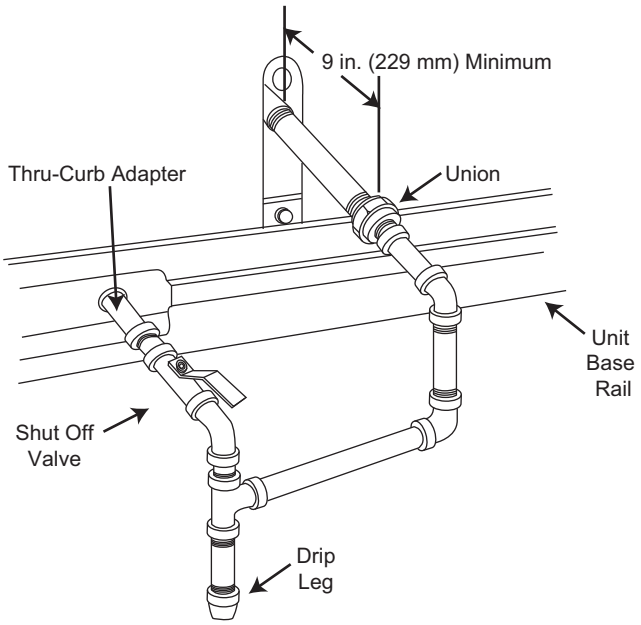

Fig. 20 — Gas Piping, Typical Curb Sidewall Piping (Example 1)

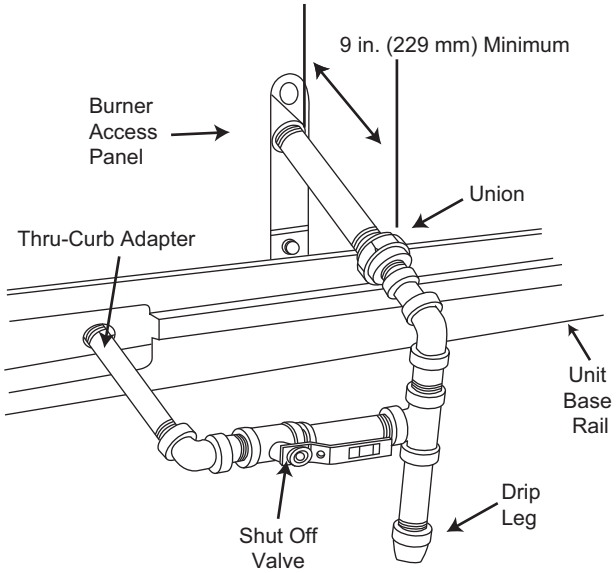

Fig. 21 — Gas Piping, Typical Curb Sidewall Piping (Example 2)

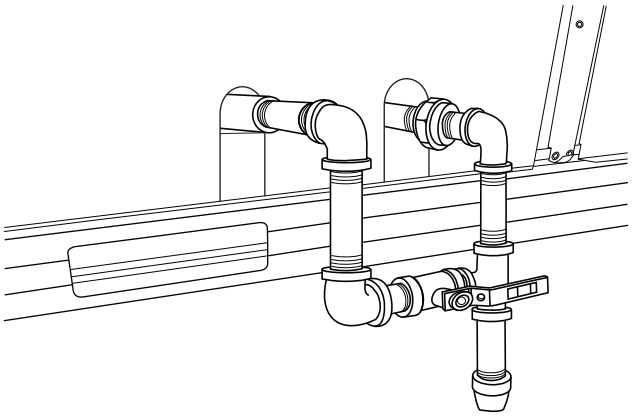

Fig. 22 — Gas Piping, Typical Thru-Base Connections

When installing the gas supply line, observe local codes pertaining to gas pipe installations. Refer to the NFPA 54/ANSI Z223.1 NFGC latest edition (in Canada, CAN/CSA B149.1). In the absence of local building codes, adhere to the following pertinent recommendations:

- Avoid low spots in long runs of pipe. Grade all pipe 1/4 in. per every 15 ft (7 mm per every 5 m) to prevent traps. Grade all horizontal runs downward to risers. Use risers to connect to heating section and to meter.
- Protect all segments of piping system against physical and thermal damage. Support all piping with appropriate straps, hangers, etc. Use a minimum of one hanger every 6 ft (1.8 m). For pipe sizes larger than 1/2 in., follow recommendations of national codes.
- Apply joint compound (pipe dope) sparingly and only to male threads of joint when making pipe connections. Use only pipe dope that is resistant to action of liquefied petroleum gases as specified by local and/or national codes. If using PTFE (Teflon®[1]) tape, ensure the material is Double Density type and is labeled for use on gas lines. Apply tape per manufacturer's instructions.
- Pressure-test all gas piping in accordance with local and national plumbing and gas codes before connecting piping to unit.

NOTE: Pressure test the gas supply system after the gas supply piping is connected to the gas valve. The supply piping must be disconnected from the gas valve during the testing of the piping systems when test pressure is in excess of 0.5 psig (3450 Pa). Pressure test the gas supply piping system at pressures equal to or less than 0.5 psig (3450 Pa). The unit heating section must be isolated from the gas piping system by closing the external main manual shutoff valve and slightly opening the ground-joint union.

Check for gas leaks at the field-installed and factory-installed gas lines after all piping connections have been completed. Use soap-and-water solution (or method specified by local codes and/or regulations).

⚠ WARNING

Failure to follow this warning could result in personal injury, death and/or property damage.

- Connect gas pipe to unit using a backup wrench to avoid damaging gas controls.
- Never purge a gas line into a combustion chamber.
- Never test for gas leaks with an open flame. Use a commercially available soap solution made specifically for the detection of leaks to check all connections.
- Use proper length of pipe to avoid stress on gas control manifold.

NOTE: If orifice hole appears damaged or it is suspected to have been redrilled, check orifice hole with a numbered drill bit of correct size. Never redrill an orifice. A burr-free and squarely aligned orifice hole is essential for proper flame characteristics. See Fig. 23.

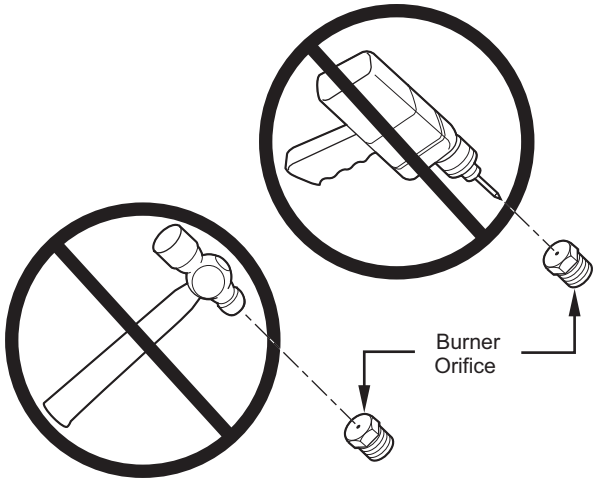

Fig. 23 — Orifice Hole

⚠ ATTENTION

After the installation of the unit gas piping and prior to gas heat start up, ensure that the distances between the main burner orifice and the burner box inlet tube meet those shown below.

If not, loosen the orifice alignment screw on the bracket shown, slide the assembly to meet those distances then tighten the screw to secure the gas orifice assembly.

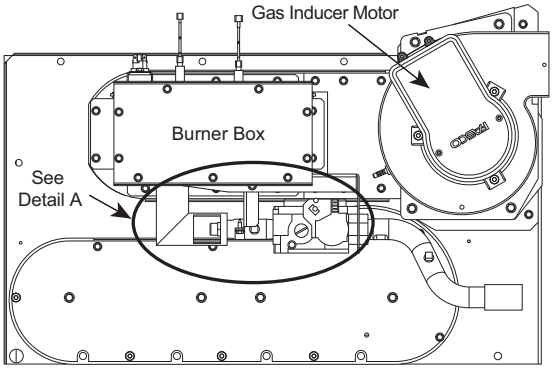

Front View — Gas Assembly and Burner Box

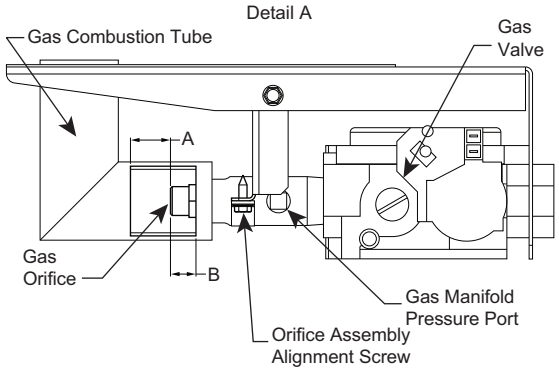

Gas Heat Model	A	B
48QEG (Low Heat)	11/16 in. (17.4 mm)	7/16 in. (11.1 mm)
48QEH (Med Heat)	5/16 in. (8.0 mm)	7/16 in. (11.1 mm)

1. Third-party trademarks and logos are the property of their respective owners.

Step 12 — Install External Condensate Trap and Line

The unit has one 3/4 in. condensate drain connection on the end of the condensate pan and an alternate connection on the bottom. See Fig. 24. Unit airflow configuration does not determine which drain connection to use. Either drain connection can be used with vertical or horizontal applications.

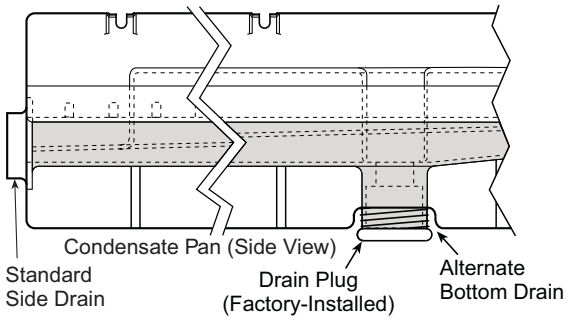

Fig. 24 — Condensate Drain Pan (Side View)

To use the alternate bottom drain connection, remove the red drain plug from the bottom connection (use a 1/2 in. square socket drive extension) and install it in the side drain connection.

The piping for the condensate drain and external trap can be completed after the unit is in place. See Fig. 25.

NOTE: If the alternate bottom drain is not used check the drain plug for tightness prior to setting the unit on the roof curb.

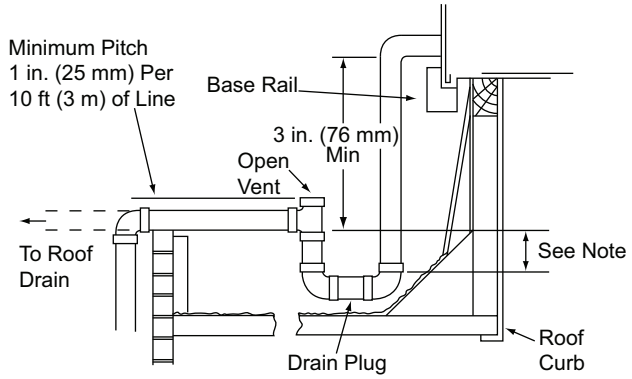

NOTE: Trap should be deep enough to offset maximum unit static difference. A 4 in. (102 mm) trap is recommended.

Fig. 25 — Condensate Drain Piping Details

All units must have an external trap for condensate drainage. Install a trap at least 4 in. (102 mm) deep and protect against freeze-up. If drain line is installed downstream from the external trap, pitch the line away from the unit at 1 in. per 10 ft (25 mm in 3 m) of run. Do not use a pipe size smaller than the unit connection (3/4-in.).

Step 13 — Make Electrical Connections

⚠WARNING

Failure to follow this warning could result in personal injury or death.

Do not use gas piping as an electrical ground.

Unit cabinet must have an uninterrupted, unbroken electrical ground to minimize the possibility of personal injury if an electrical fault should occur. This ground may consist of electrical wire connected to unit ground lug in control compartment, or conduit approved for electrical ground when installed in accordance with NEC (National Electrical Code); ANSI/NFPA 70, latest edition (in Canada, Canadian Electrical Code CSA [Canadian Standards Association] C22.1), and local electrical codes.

NOTE: Check all factory and field electrical connections for tightness. Field-supplied wiring shall conform with the limitations of minimum 63°F (33°C) rise.

FIELD POWER SUPPLY

If equipped with optional Powered Convenience Outlet: The power source leads to the convenience outlet's transformer primary are not factory connected. Installer must connect these leads according to required operation of the convenience outlet. If an always-energized convenience outlet operation is desired, connect the source leads to the line side of the unit-mounted disconnect. (Check with local codes to ensure this method is acceptable in your area.) If a de-energize via unit disconnect switch operation of the convenience outlet is desired, connect the source leads to the load side of the unit disconnect. On a unit without a unit-mounted disconnect, connect the source leads to compressor contactor C and indoor fan contactor IFC pressure lugs with unit field power leads.

Refer to Fig. 26 for power transformer connections and the discussion on connecting the convenience outlet on page 21.

Field power wires are connected to the unit at line-side pressure lugs on compressor contactor C and indoor fan contactor IFC (see wiring diagram label for control box component arrangement) or at factory-installed option non-fused disconnect switch. Max wire size is #2 AWG (copper only, see Fig. 27.)

NOTE: TEST LEADS - Unit may be equipped with short leads (pigtails) on the field line connection points on contactor C or optional disconnect switch. These leads are for factory run-test purposes only; remove and discard before connecting field power wires to unit connection points. Make field power connections directly to line connection pressure lugs only.

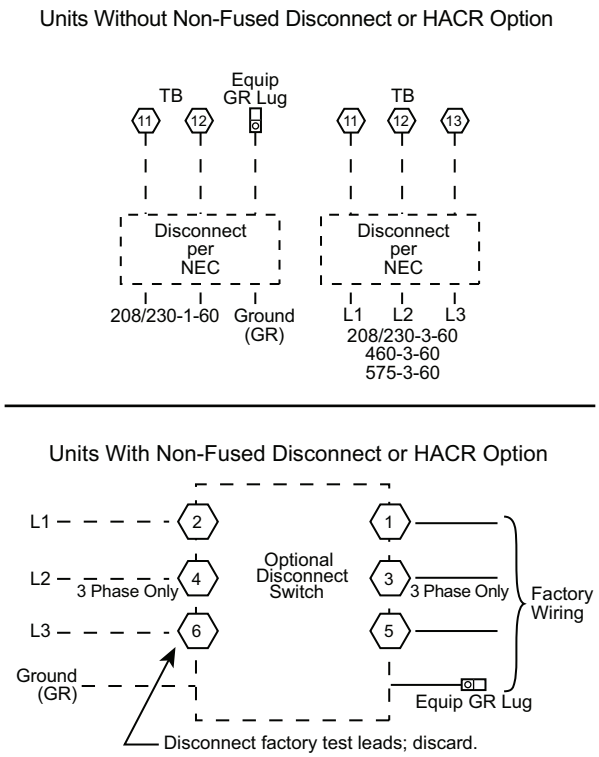

Fig. 26 — Power Wiring Connections

⚠ WARNING

FIRE HAZARD

Failure to follow this warning could result in personal injury, death, or property damage.

Do not connect aluminum wire between disconnect switch and unit. Use only copper wire.

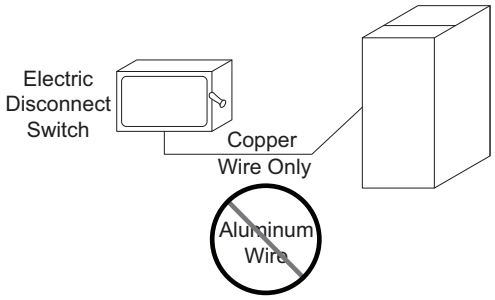

Fig. 27 — Disconnect Switch and Unit

UNITS WITH FACTORY-INSTALLED NON-FUSED DISCONNECT OR HACR CIRCUIT BREAKER

The factory-installed option non-fused disconnect (NFD) switch is located in a weatherproof enclosure located under the main control box. The manual switch handle and shaft are shipped in the disconnect enclosure. Assemble the shaft and handle to the switch at this point. Discard the factory test leads (see Fig. 26).

Connect field power supply conductors to LINE side terminals when the switch enclosure cover is removed to attach the handle.

Field-Install the NFD Shaft and Handle

1. Remove the control box access panel. The NFD enclosure is located below the control box (see Fig. 28).
2. Remove (3) cap head screws that secure the NFD enclosure front cover — (2) on the face of the cover and (1) on the left side cover. See Fig. 29.
3. Remove the front cover of the NFD enclosure.
4. Make sure the NFD shipped from the factory is at OFF position (the arrow on the black handle knob is at OFF).
5. Insert the shaft with the cross pin on the top of the shaft in the horizontal position. See Fig. 29.
6. Measure from the tip of the shaft to the top surface of the black pointer; the measurement should be 3.75 to 3.88 in. (95 to 99 mm).
7. Tighten the locking screw to secure the shaft to the NFD.
8. Turn the handle to the OFF position with red arrow pointing at OFF.
9. Install the handle on to the painted cover horizontally with the red arrow pointing to the left.
10. Secure the handle to the painted cover with (2) screws and lock washers supplied.
11. Engaging the shaft into the handle socket, re-install (3) hex screws on the NFD enclosure.
12. Re-install the unit front panel.

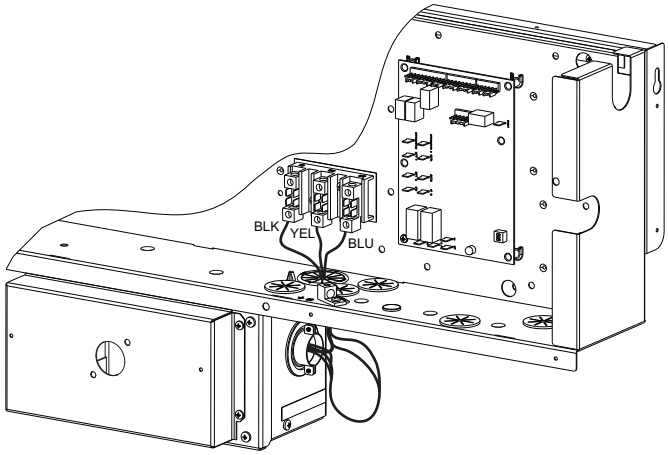

Fig. 28 — NFD Enclosure Location

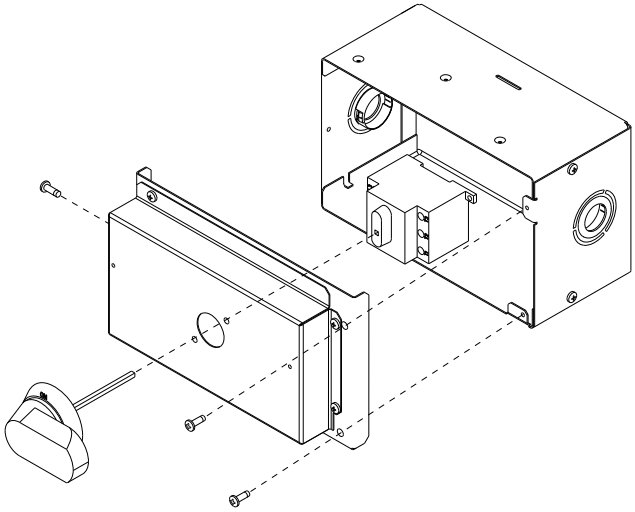

Fig. 29 — NFD Handle and Shaft Assembly

Field-Install the HACR Shaft and Handle

1. Remove the Control Box access panel. The HACR enclosure is located below the Control Box (see Fig. 30).
2. Remove (3) cap head screws that secure the HACR enclosure — (2) on the face of the cover and (1) on the left side cover. See Fig. 31.
3. Remove the front cover of the HACR enclosure.

4. Make sure the HACR shipped from the factory is at OFF position (the white arrow pointing at OFF).
5. Insert the shaft all the way with the cross pin on the top of the shaft in the horizontal position. See Fig. 31.
6. Tighten the locking screw to secure the shaft to the HACR.
7. Turn the handle to the OFF position with red arrow pointing at OFF.
8. Install the handle on to the painted cover horizontally with the red arrow pointing to the left.
9. Secure the handle to the painted cover with (2) screws and lock washers supplied.
10. Engaging the shaft into the handle socket, re-install (3) hex screws on the HACR enclosure.
11. Re-install the unit front panel.

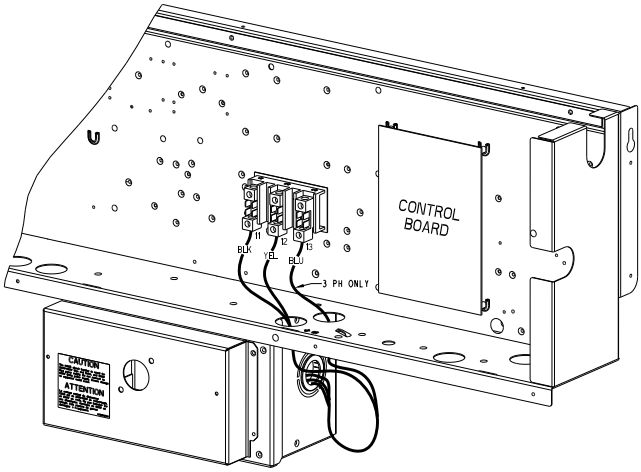

Fig. 30 — HACR Enclosure Location

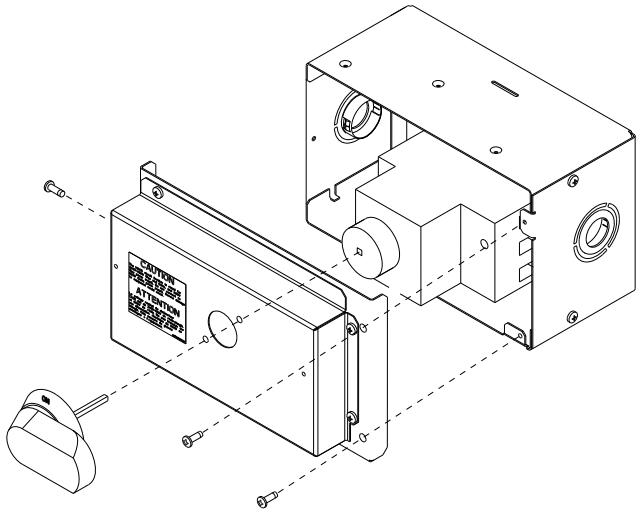

Fig. 31 — HACR Handle and Shaft Assembly

UNITS WITHOUT FACTORY-INSTALLED NON-FUSED DISCONNECT OR HACR CIRCUIT BREAKER

When installing units, provide a disconnect switch per NEC (National Electrical Code) of adequate size. Disconnect sizing data is provided on the unit informative plate. Locate on unit cabinet or within sight of the unit per national or local codes. Do not cover unit informative plate if mounting the disconnect on the unit cabinet.

ALL UNITS

All field wiring must comply with NEC and all local codes. Size wire based on MCA (Minimum Circuit Amps) on the unit informative plate. See Fig. 26 and the unit label diagram for power wiring connections to the unit power terminal blocks and equipment ground. Maximum wire size is #2 ga AWG per pole.

Provide a ground-fault and short-circuit over-current protection device (fuse or breaker) per NEC Article 440 (or local codes). Refer to unit informative data plate for MOCP (Maximum Overcurrent Protection) device size.

All field wiring must comply with the NEC and local requirements.

All units except 208/230-v units are factory wired for the voltage shown on the nameplate. If the 208/230-v unit is to be connected to a 208-v power supply, the control transformer must be rewired by moving the black wire with the 1/4 in. female spade connector from the 230-v connection and moving it to the 200-v 1/4 in. male terminal on the primary side of the transformer. Refer to unit label diagram for additional information. Field power wires will be connected line-side pressure lugs on the power terminal block or at factory-installed option non-fused disconnect.

CONVENIENCE OUTLETS

⚠ WARNING

ELECTRICAL OPERATION HAZARD

Failure to follow this warning could result in personal injury or death.

Units with convenience outlet circuits may use multiple disconnects. Check convenience outlet for power status before opening unit for service. Locate its disconnect switch, if appropriate, and open it. Lock-out and tag-out this switch, if necessary.

Two types of convenience outlets are offered on 48QE(G/H) models: Non-powered and unit-powered. Both types provide a 125-volt GFCI (ground-fault circuit-interrupter) duplex receptacle rated at 15-A behind a hinged waterproof access cover, located on the end panel of the unit. See Fig. 32.

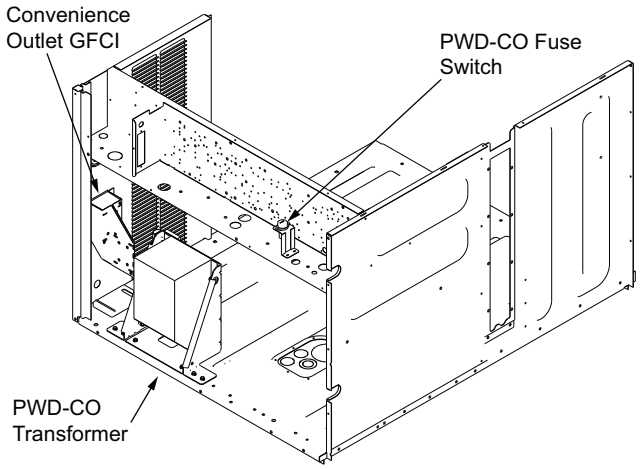

Fig. 32 — Convenience Outlet Location

Figure 33 shows the Convenience Outlet Utilization label which is located below the convenience outlet.

NOTICE

Convenience Outlet Utilization

Maximum Continuous use: 15 Amps for receptacle outlets, and 8 Amps for factory supplied transformers

50HJ542739 | C

Fig. 33 — Convenience Outlet Utilization Notice Label

NOTE: Unit powered convenience outlets are not available as factory installed options for size 04-06 single phase (-3 voltage code) models.

Installing Weatherproof Cover

A weatherproof while-in-use cover for the factory-installed convenience outlets is now required by UL standards. This cover cannot be factory-mounted due its depth; it must be installed at unit installation. For shipment, the convenience outlet is covered with a blank cover plate.

The weatherproof cover kit is secured to the basepan underneath the control box. See Fig. 34.

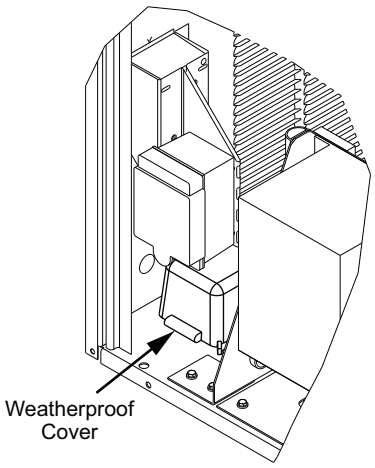

Fig. 34 — Weatherproof Cover - Shipping Location

DISCONNECT ALL POWER TO UNIT AND CONVENIENCE OUTLET. LOCK-OUT AND TAG-OUT ALL POWER.

Remove the blank cover plate at the convenience outlet; discard the blank cover.

Loosen the two screws at the GFCI duplex outlet, until approximately 1/2 in. (13 mm) under screw heads are exposed. Press the gasket over the screw heads. Slip the backing plate over the screw heads at the keyhole slots and align with the gasket; tighten the two screws until snug (do not over-tighten).

Mount the weatherproof cover to the backing plate as shown in Fig. 35. Remove two slot fillers in the bottom of the cover to permit service tool cords to exit the cover. Check for full closing and latching.

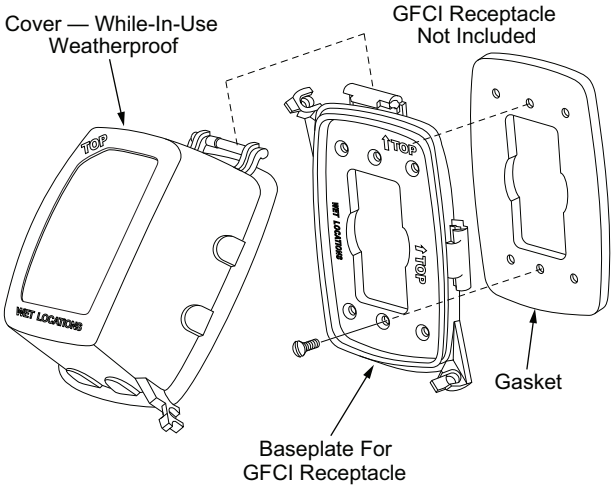

Fig. 35 — Weatherproof Cover Installation

Non-Powered Convenience Outlet

This type requires the field installation of a general-purpose 125-volt 15-A circuit powered from a source elsewhere in the building. Observe national and local codes when selecting wire size, fuse or breaker requirements and disconnect switch size and location. Route 125-v power supply conductors into the bottom of the utility box containing the duplex receptacle.

Unit-Powered Convenience Outlet

A unit-mounted transformer is factory-installed to stepdown the main power supply voltage to the unit to 115-v at the duplex receptacle. This option also includes a manual switch with fuse, located in a utility box and mounted on a bracket behind the convenience outlet; access is through the unit's control box access panel. See Fig. 32.

The primary leads to the convenience outlet transformer are not factory-connected. Selection of primary power source is a customer-option. If local codes permit, the transformer primary leads can be connected at the line-side terminals on the unit-mounted non-fused disconnect switch; this will provide service power to the unit when the unit disconnect switch is open. Other connection methods will result in the convenience outlet circuit being de-energized when the unit disconnect switch is open. See Fig. 36.

Using Unit-Mounted Convenience Outlets

Units with unit-mounted convenience outlet circuits will often require that two disconnects be opened to de-energize all power to the unit. Treat all units as electrically energized until the convenience outlet power is also checked and de-energization is confirmed. Observe National Electrical Code Article 210, Branch Circuits, for use of convenience outlets.

Test the GFCI receptacle by pressing the TEST button on the face of the receptacle to trip and open the receptacle. Check for proper grounding wires and power line phasing if the GFCI receptacle does not trip as required. Press the RESET button to clear the tripped condition.

Fuse On Power Type

The factory fuse is a Bussman™[1] Fusetron™[1] T-15, non-renewable screw-in (Edison base) type plug fuse.

1. Third-party trademarks and logos are the property of their respective owners.

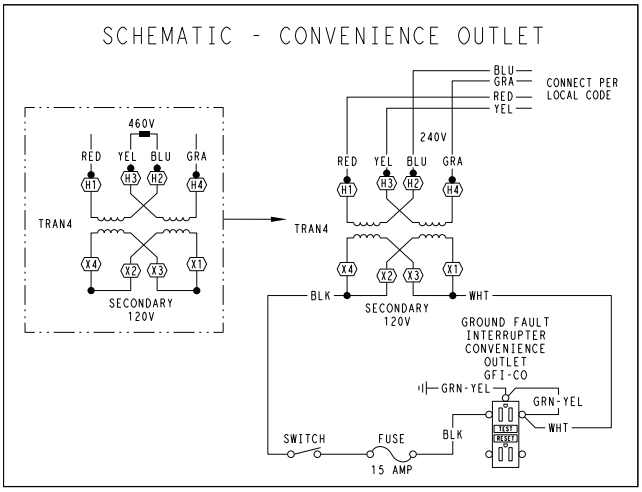

UNIT VOLTAGE	CONNECT AS	PRIMARY CONNECTIONS	TRANSFORMER TERMINALS
208, 230	240	L1: RED +YEL L2: BLU + GRA	H1 + H3 H2 + H4
460	480	L1: RED Splice BLU + YEL L2: GRA	H1 H2 + H3 H4

Fig. 36 — Powered Convenience Outlet Wiring

FACTORY OPTION THRU-BASE CONNECTIONS

This service connection kit consists of a 1/2 in. electrical bulkhead connector and a 3/4 in. electrical bulkhead connector, connected to an "L" bracket covering the embossed (raised) section of the unit basepan in the condenser section (see Fig. 37 for shipping position).

The 3/4 in. bulkhead connector enables the low-voltage control wires to pass through the basepan. The 1/2 in. bulkhead connector allows the high-voltage power wires to pass through the basepan. See Fig. 38.

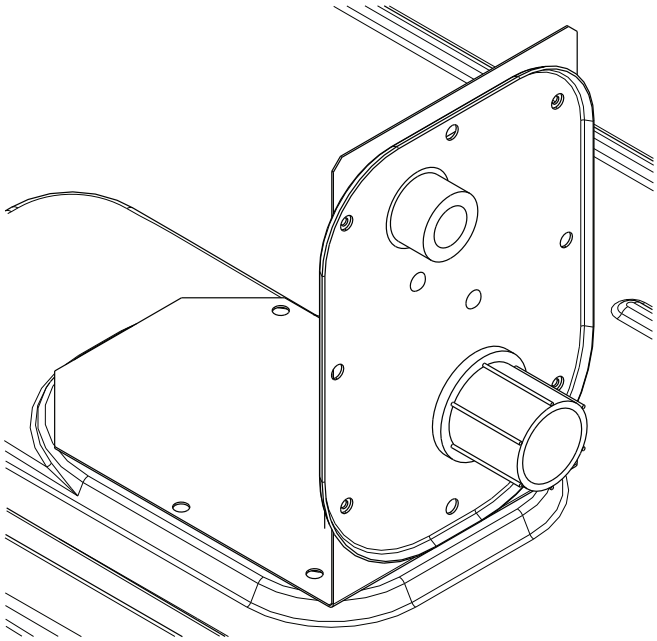

Fig. 37 — Thru-the-Base Fitting Assembly (Shown in Shipping Position)

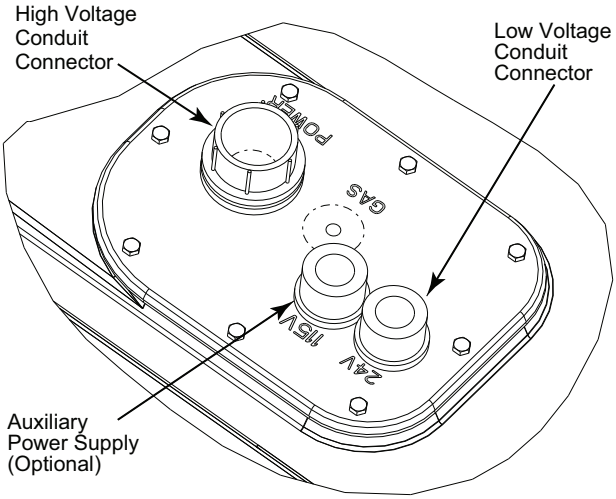

Fig. 38 — Thru-Base Connection Fittings

1. Remove the "L" bracket assembly from the unit.
2. Remove connector plate assembly from the "L" bracket and discard the "L" bracket, but retain the washer head screws and the gasket (located between the "L" bracket and the connector plate assembly).

NOTE: Take care not to damage the gasket, as it is reused in the following step.

3. Place the gasket over the embossed area in the basepan, aligning the holes in the gasket to the holes in the basepan. See Fig. 38.
4. Install the connector plate assembly to the basepan using 8 of the washer head screws.

NOTE: If electrical connections are not going to occur at this time, tape or otherwise cover the fittings so that moisture does not get into the building or conduit in the interim.

Check tightness of connector lock nuts before connecting electrical conduits.

Field-supplied and field-installed liquid-tight conduit connectors and conduit may be attached to the connectors on the basepan. Pull correctly rated high voltage and low voltage through appropriate conduits to maintain separation between low voltage and high voltage wires in accordance with UL and NEC requirements. Connect the power conduit to the internal disconnect (if unit is so equipped) or to the external disconnect (through unit side panel). Remove one of the two knockouts located on the bottom left side of the unit control box. Use this hole for the control conduit.

UNITS WITHOUT THRU-BASE CONNECTIONS

1. Install power wiring conduit through side panel openings. Install conduit between disconnect and control box.
2. Install power lines to terminal connections as shown in Fig 26.

Voltage to compressor terminals during operation must be within voltage range indicated on unit nameplate. On 3-phase units, voltages between phases must be balanced within 2% and the current within 10%. Use the following formula to determine the percent of voltage imbalance. Operation on improper line voltage or excessive phase imbalance constitutes abuse and may cause damage to electrical components. Such operation would invalidate any applicable Carrier warranty.

$$\text{\% Voltage Imbalance} = 100 \times \frac{\text{max voltage deviation from average voltage}}{\text{average voltage}}$$

Example: Supply voltage is 230-3-60

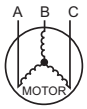

AB = 224-v
BC = 231-v
AC = 226-v

$$\text{Average Voltage} = \frac{(224 + 231 + 226)}{3} = \frac{681}{3} = 227$$

Determine maximum deviation from average voltage.

(AB) 227-224 = 3-v

(BC) 231-227 = 4-v

(AC) 227-226 = 1-v

Maximum deviation is 4-v.

Determine percent of voltage imbalance.

$$\text{\% Voltage Imbalance} = 100x \frac{4}{227} = 1.76\%$$

This amount of phase imbalance is satisfactory as it is below the maximum allowable 2%.

IMPORTANT: If the supply voltage phase imbalance is more than 2%, contact your local electric utility company immediately.

FIELD CONTROL WIRING

48QE(G/H) units are equipped with the SystemVu™ controller which can be use on a Carrier Comfort Network® or as a stand-alone control. All field added wire must comply with UL and local NEC standards.

THERMOSTAT

Select a Carrier-approved accessory thermostat. Install the accessory thermostat according to installation instructions included with the accessory.

Locate the thermostat accessory on a solid wall in the conditioned space to sense average temperature in accordance with the thermostat installation instructions.

If the thermostat contains a logic circuit requiring 24-v power, use a thermostat cable or equivalent single leads of different colors with minimum of seven leads. If the thermostat does not require a 24-v source (no "C" connection required), use a thermostat cable or equivalent with minimum of six leads. See Fig. 39. Check the thermostat installation instructions for additional features which might require additional conductors in the cable.

For wire runs up to 50 ft (15 m), use no. 18 AWG (American Wire Gage) insulated wire [35°C (95°F) minimum]. For 50 to 75 ft (15 to 23 m), use no. 16 AWG insulated wire [35°C (95°F) minimum]. For over 75 ft (23 m), use no. 14 AWG insulated wire [35°C (95°F) minimum]. All wire sizes larger than no. 18 AWG cannot be directly connected to the thermostat and will require a junction box and splice at the thermostat.

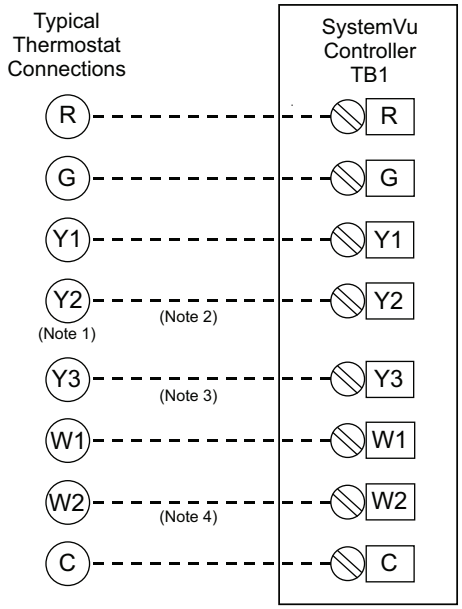

NOTES:
1. Typical multi-function marking. Follow manufacturer's configuration instructions to select Y2.
2. Y2 to Y2 connection required on single-stage cooling units when integrated economizer function is desired.
3. Y3 terminal is configurable in the software.
4. W2 connection not required on units with single-stage heating.

- - - Field Wiring

Fig. 39 — Typical Low-Voltage Control Connections

UNIT WITHOUT THRU-BASE CONNECTION KIT

Pass the thermostat control wires through the hole provided in the corner post; then feed the wires through the raceway built into the corner post to the control box. Pull the wires over to the terminal strip on the lower-left corner of the SystemVu controller main base board. See Fig. 40. Using the raceway maintains separation between low voltage and high voltage wires in accordance with UL and NEC requirements.

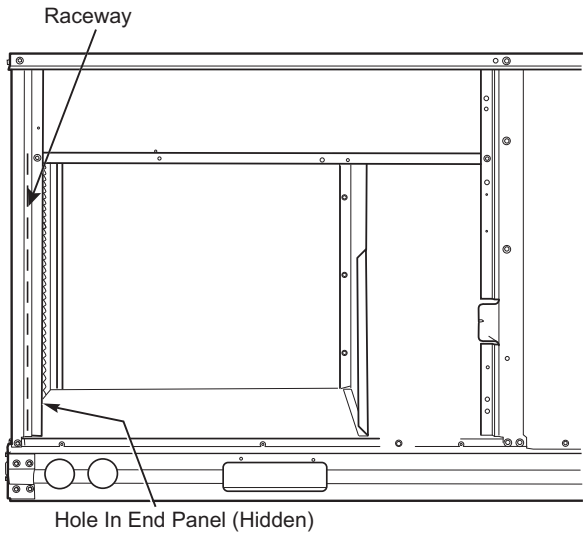

Fig. 40 — Field Control Wiring Raceway

NOTE: If thru-the-bottom connections accessory is used, refer to the accessory installation instructions for information on routing power and control wiring.

ZS SPACE SENSOR

The ZS Standard, Plus, or Pro can be wired into J20 or J24 of the SystemVu controller (see Fig. 44), J20 provides an easy field connection plug. A maximum of 5 ZS sensors can be connected but a separate power supply may be needed. Use the ZS SENSOR CFG menu (***SETTINGS→NETWORK SETTINGS***) when setting up the ZS sensors in SystemVu. The Sensor addresses have to be unique and set in the actual sensors via DIP also. The Typical default for the ZS Sensor is address 1. Follow the ZS installation instruction for further details on the sensors. ZS sensor data can be monitored on SystemVu in the ZS Sensor Info menu (***INPUTS→NETWORK→ZS SENSOR INFO***).

J20-1 Sensor Common

J20-2 Sensor Communication Positive (+)

J20-3 Sensor Communication Negative (–)

J20-4 Sensor +12 vdc Power

HUMIDI-MIZER® SYSTEM CONTROL CONNECTIONS

Humidi-MiZer Space RH Controller

NOTE: The Humidi-MiZer system is a factory-installed option. Humidi-MiZer system is not available for single phase (-3 voltage code) models.

The Humidi-MiZer dehumidification system requires a field-supplied and field-installed space relative humidity control device such as Carrier's Connect™ Plus thermostat with isolated contact set for dehumidification control. See Fig. 41.

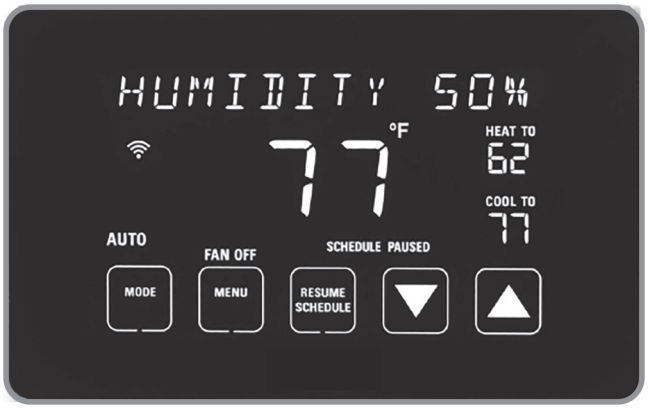

Fig. 41 — Field-Installed Connect Plus Thermostat

Connecting the Carrier Connect Plus (33TCSPL-4)

1. Route the Thermostat multi-conductor thermostat cable (field-supplied) through the hole provided in the unit corner post.
2. Feed wires through the raceway built into the corner post (see Fig. 40) to the 24-v barrier located on the left side of the control box. The raceway provides the UL-required clearance between high-voltage and low-voltage wiring.
3. For connections to the SystemVu controller see Fig. 42. Refer to the installation instructions included with the Carrier Connect Plus thermostat for more information.

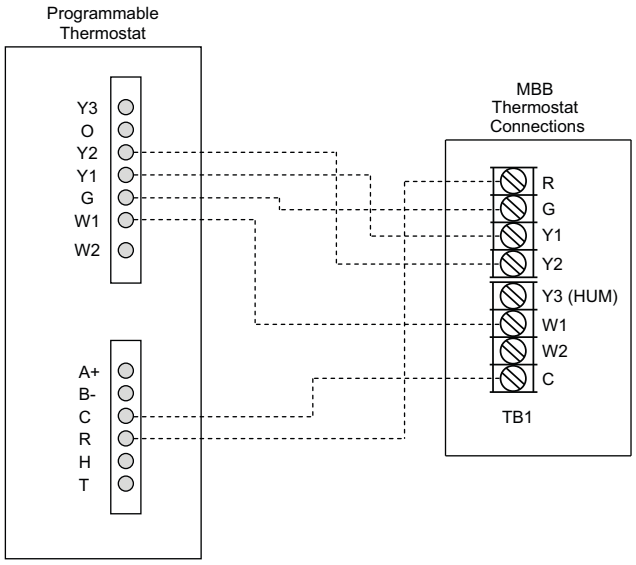

Fig. 42 — Typical Thermostat Connections – SystemVu Controller MBB

Humidi-MiZer Connections to Connect Plus Thermostat

1. Route the humidistat 2-conductor cable (field-supplied) through the hole provided in the unit corner post.
2. Feed wires through the raceway built into the corner post (see Fig. 40) to the 24-v barrier located on the left side of the control box. The raceway provides the UL-required clearance between high-voltage and low-voltage wiring.
3. For SystemVu controller units connect one of the leads from the 2-conductor cable to the Y3 (HUM) terminal on the MBB (Main Base Board). Connect the other lead to the R terminal on the MBB. See Fig. 43.

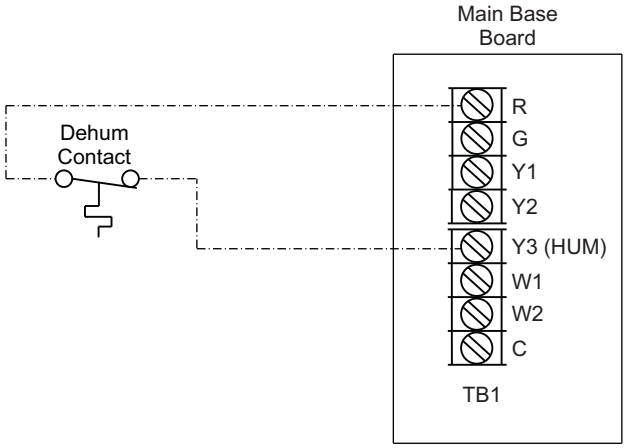

Fig. 43 — Humidistat Connections to MBB (SystemVu Units)

CONTROL AND POWER WIRING DIAGRAMS

Figures 44-49 are typical control and power wiring diagrams. These wiring diagrams are mounted on the inside of the unit control box. Refer to the wiring diagrams in the unit control box when making field power wiring connections.

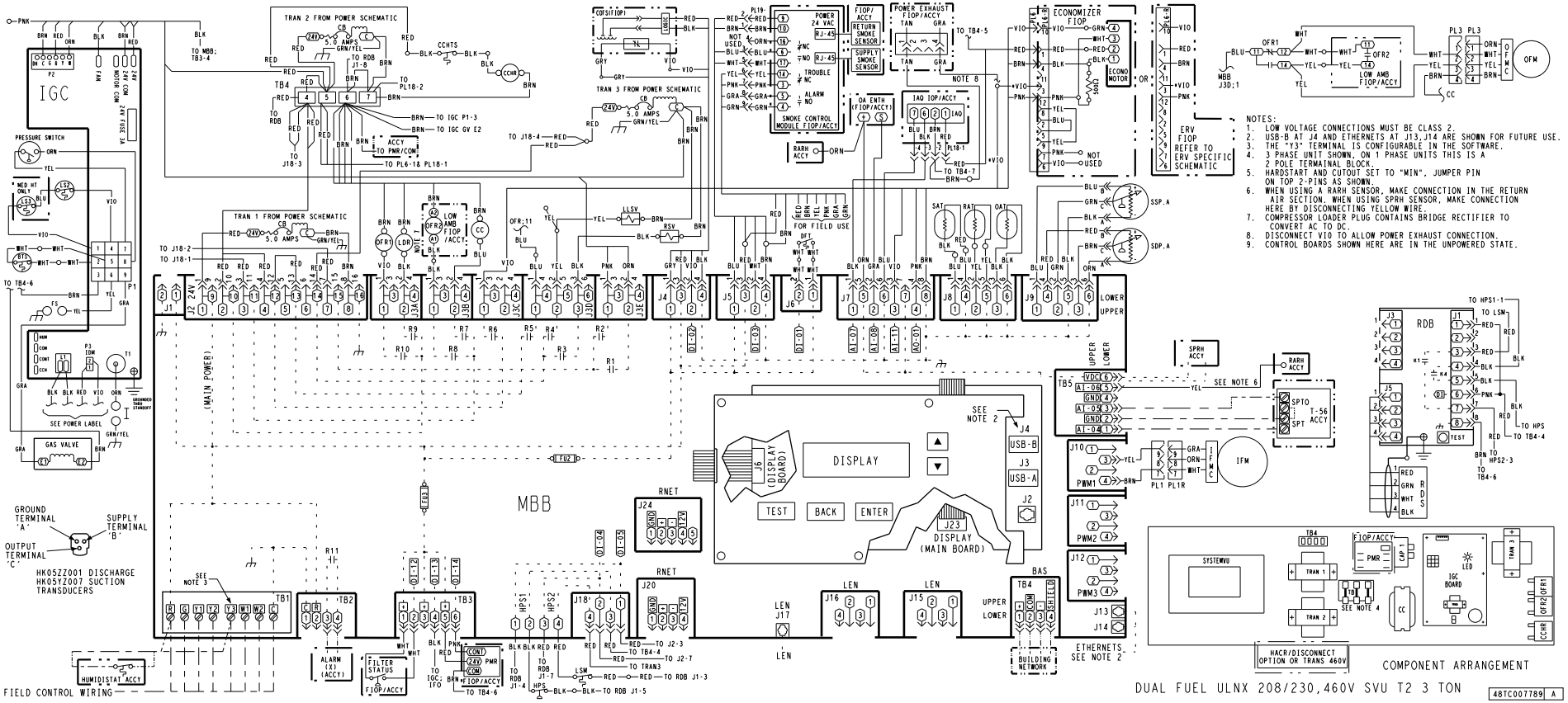

Fig. 44 — Typical Control Wiring Diagram, SystemVu Controller, 48QE(G/H) 04 Unit Shown

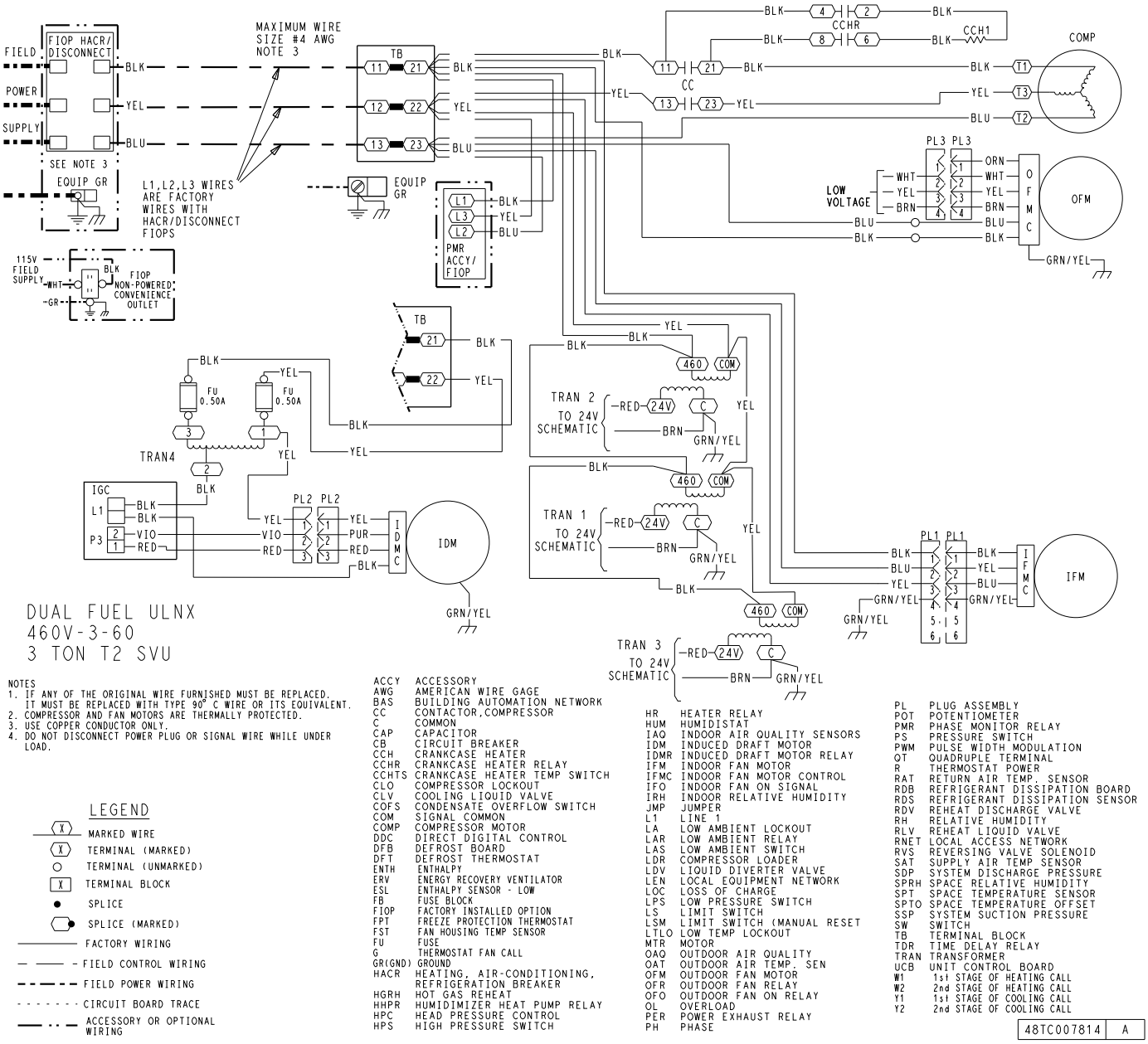

NOTES
1. IF ANY OF THE ORIGINAL WIRE FURNISHED MUST BE REPLACED. IT MUST BE REPLACED WITH TYPE 90° C WIRE OR ITS EQUIVALENT.
2. COMPRESSOR AND FAN MOTORS ARE THERMALLY PROTECTED.
3. USE COPPER CONDUCTOR ONLY.
4. DO NOT DISCONNECT POWER PLUG OR SIGNAL WIRE WHILE UNDER LOAD.

LEGEND

- MARKED WIRE
- TERMINAL (MARKED)
- TERMINAL (UNMARKED)
- TERMINAL BLOCK
- SPLICE
- SPLICE (MARKED)
- FACTORY WIRING
- FIELD CONTROL WIRING
- FIELD POWER WIRING
- CIRCUIT BOARD TRACE
- ACCESSORY OR OPTIONAL WIRING

ACCY	ACCESSORY
AWG	AMERICAN WIRE GAGE
BAS	BUILDING AUTOMATION NETWORK
CC	CONTACTOR,COMPRESSOR
C	COMMON
CAP	CAPACITOR
CB	CIRCUIT BREAKER
CCH	CRANKCASE HEATER
CCHR	CRANKCASE HEATER RELAY
CCHTS	CRANKCASE HEATER TEMP SWITCH
CLO	COMPRESSOR LOCKOUT
CLV	COOLING LIQUID VALVE
COFS	CONDENSATE OVERFLOW SWITCH
COM	SIGNAL COMMON
COMP	COMPRESSOR MOTOR
DDC	DIRECT DIGITAL CONTROL
DFB	DEFROST BOARD
DFT	DEFROST THERMOSTAT
ENTH	ENTHALPY
ERV	ENERGY RECOVERY VENTILATOR
ESL	ENTHALPY SENSOR - LOW
FB	FUSE BLOCK
FIOP	FACTORY INSTALLED OPTION
FPT	FREEZE PROTECTION THERMOSTAT
FST	FAN HOUSING TEMP SENSOR
FU	FUSE
G	THERMOSTAT FAN CALL
GR(GND)	GROUND
HACR	HEATING, AIR-CONDITIONING, REFRIGERATION BREAKER
HGRH	HOT GAS REHEAT
HHPR	HUMIDIMIZER HEAT PUMP RELAY
HPC	HEAD PRESSURE CONTROL
HPS	HIGH PRESSURE SWITCH
HR	HEATER RELAY
HUM	HUMIDISTAT
IAQ	INDOOR AIR QUALITY SENSORS
IDM	INDUCED DRAFT MOTOR
IDMR	INDUCED DRAFT MOTOR RELAY
IFM	INDOOR FAN MOTOR
IFMC	INDOOR FAN MOTOR CONTROL
IFO	INDOOR FAN ON SIGNAL
IRH	INDOOR RELATIVE HUMIDITY
JMP	JUMPER
L1	LINE 1
LA	LOW AMBIENT LOCKOUT
LAR	LOW AMBIENT RELAY
LAS	LOW AMBIENT SWITCH
LDR	COMPRESSOR LOADER
LDV	LIQUID DIVERTER VALVE
LEN	LOCAL EQUIPMENT NETWORK
LOC	LOSS OF CHARGE
LPS	LOW PRESSURE SWITCH
LS	LIMIT SWITCH
LSM	LIMIT SWITCH (MANUAL RESET
LTLO	LOW TEMP LOCKOUT
MTR	MOTOR
OAQ	OUTDOOR AIR QUALITY
OAT	OUTDOOR AIR TEMP. SEN
OFM	OUTDOOR FAN MOTOR
OFR	OUTDOOR FAN RELAY
OFO	OUTDOOR FAN ON RELAY
OL	OVERLOAD
PER	POWER EXHAUST RELAY
PH	PHASE
PL	PLUG ASSEMBLY
POT	POTENTIOMETER
PMR	PHASE MONITOR RELAY
PS	PRESSURE SWITCH
PWM	PULSE WIDTH MODULATION
QT	QUADRUPLE TERMINAL
R	THERMOSTAT POWER
RAT	RETURN AIR TEMP. SENSOR
RDB	REFRIGERANT DISSIPATION BOARD
RDS	REFRIGERANT DISSIPATION SENSOR
RDV	REHEAT DISCHARGE VALVE
RH	RELATIVE HUMIDITY
RLV	REHEAT LIQUID VALVE
RNET	LOCAL ACCESS NETWORK
RVS	REVERSING VALVE SOLENOID
SAT	SUPPLY AIR TEMP SENSOR
SDP	SYSTEM DISCHARGE PRESSURE
SPRH	SPACE RELATIVE HUMIDITY
SPT	SPACE TEMPERATURE SENSOR
SPTO	SPACE TEMPERATURE OFFSET
SSP	SYSTEM SUCTION PRESSURE
SW	SWITCH
TB	TERMINAL BLOCK
TDR	TIME DELAY RELAY
TRAN	TRANSFORMER
UCB	UNIT CONTROL BOARD
W1	1st STAGE OF HEATING CALL
W2	2nd STAGE OF HEATING CALL
Y1	1st STAGE OF COOLING CALL
Y2	2nd STAGE OF COOLING CALL

48TC007814 | A

Fig. 45 — Typical 48QE(G/H) 04 Power Wiring Diagram, SystemVu, 460V-3-60 Shown

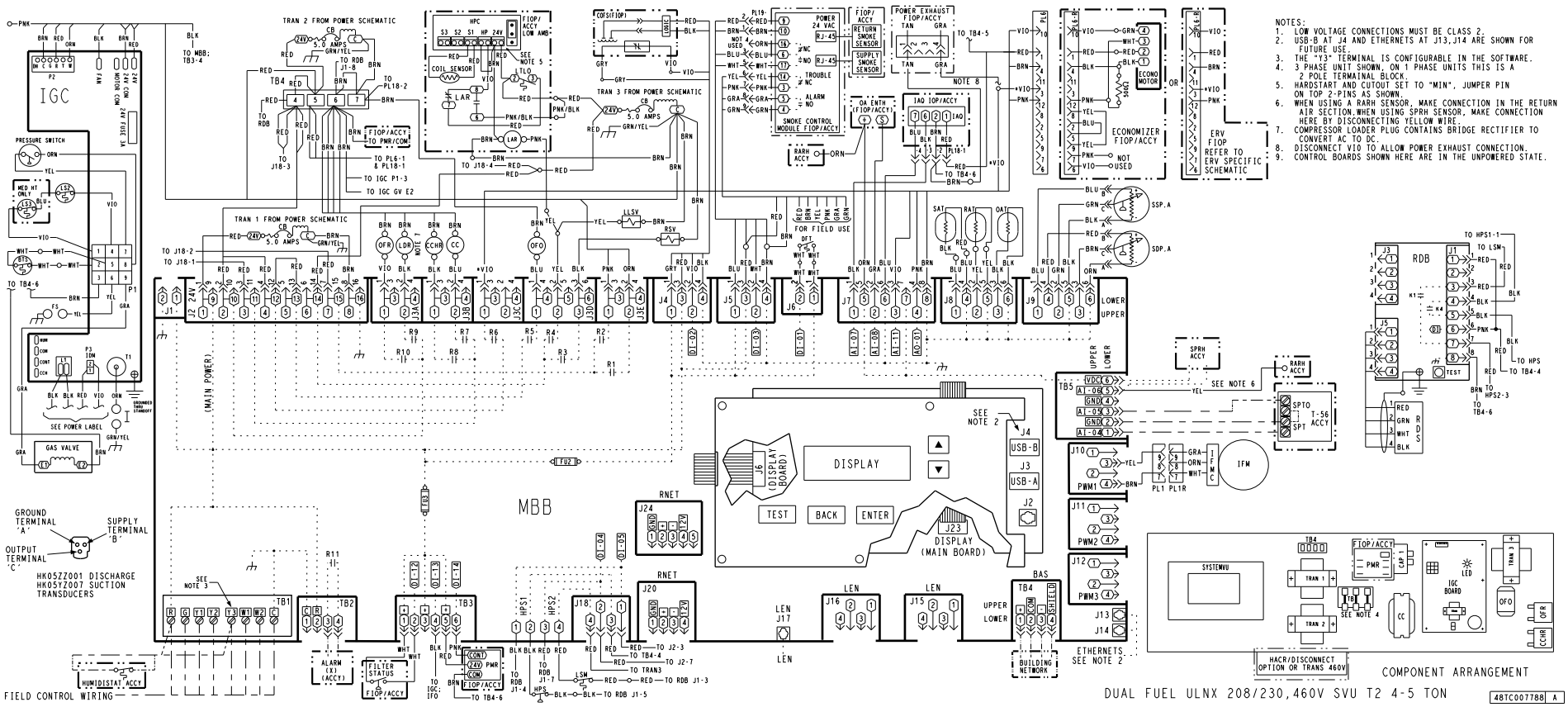

Fig. 46 — Typical Control Wiring Diagram, SystemVu Controller, 48QE(G/H) 05-06 Units Shown

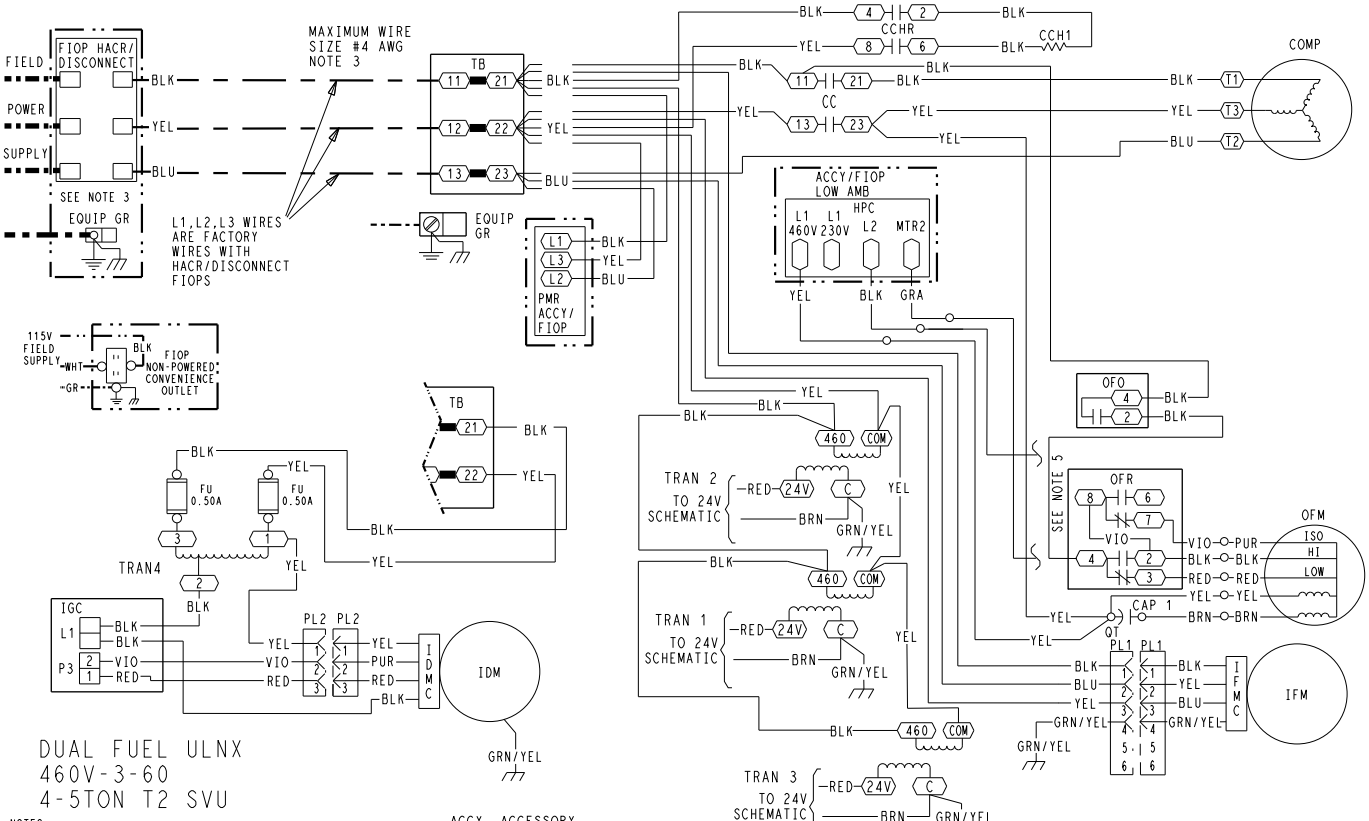

DUAL FUEL ULNX
460V-3-60
4-5TON T2 SVU

NOTES
1. IF ANY OF THE ORIGINAL WIRE FURNISHED MUST BE REPLACED. IT MUST BE REPLACED WITH TYPE 90° C WIRE OR ITS EQUIVALENT.
2. COMPRESSOR AND FAN MOTORS ARE THERMALLY PROTECTED.
3. USE COPPER CONDUCTOR ONLY.
4. DO NOT DISCONNECT POWER PLUG OR SIGNAL WIRE WHILE UNDER LOAD.
5. THIS WIRE NOT USED WITH LOW AMBIENT FIOP/ACCY.

LEGEND

- MARKED WIRE
- TERMINAL (MARKED)
- TERMINAL (UNMARKED)
- TERMINAL BLOCK
- SPLICE
- SPLICE (MARKED)
- FACTORY WIRING
- FIELD CONTROL WIRING
- FIELD POWER WIRING
- CIRCUIT BOARD TRACE
- ACCESSORY OR OPTIONAL WIRING

ACCY	ACCESSORY
AWG	AMERICAN WIRE GAGE
BAS	BUILDING AUTOMATION NETWORK
CC	CONTACTOR,COMPRESSOR
C	COMMON
CAP	CAPACITOR
CB	CIRCUIT BREAKER
CCH	CRANKCASE HEATER
CCHR	CRANKCASE HEATER RELAY
CCHTS	CRANKCASE HEATER TEMP SWITCH
CLO	COMPRESSOR LOCKOUT
CLV	COOLING LIQUID VALVE
COFS	CONDENSATE OVERFLOW SWITCH
COM	SIGNAL COMMON
COMP	COMPRESSOR MOTOR
DDC	DIRECT DIGITAL CONTROL
DFB	DEFROST BOARD
DFT	DEFROST THERMOSTAT
ENTH	ENTHALPY
ERV	ENERGY RECOVERY VENTILATOR
ESL	ENTHALPY SENSOR - LOW
FB	FUSE BLOCK
FIOP	FACTORY INSTALLED OPTION
FPT	FREEZE PROTECTION THERMOSTAT
FST	FAN HOUSING TEMP SENSOR
FU	FUSE
G	THERMOSTAT FAN CALL
GR(GND)	GROUND
HACR	HEATING, AIR-CONDITIONING, REFRIGERATION BREAKER
HGRH	HOT GAS REHEAT
HHPR	HUMIDIMIZER HEAT PUMP RELEAY
HPC	HEAD PRESSURE CONTROL
HPS	HIGH PRESSURE SWITCH
HR	HEATER RELAY
HUM	HUMIDISTAT
IAQ	INDOOR AIR QUALITY SENSORS
IDM	INDUCED DRAFT MOTOR
IFM	INDOOR FAN MOTOR
IFMC	INDOOR FAN MOTOR CONTROL
IFO	INDOOR FAN ON SIGNAL
IRH	INDOOR RELATIVE HUMIDITY
JMP	JUMPER
L1	LINE 1
LA	LOW AMBIENT LOCKOUT
LAR	LOW AMBIENT RELAY
LAS	LOW AMBIENT SWITCH
LDR	COMPRESSOR LOADER
LDV	LIQUID DIVERTER VALVE
LEN	LOCAL EQUIPMENT NETWORK
LOC	LOSS OF CHARGE
LPS	LOW PRESSURE SWITCH
LS	LIMIT SWITCH
LSM	LIMIT SWITCH (MANUAL RESET)
LTLO	LOW TEMP LOCKOUT
MTR	MOTOR
OAQ	OUTDOOR AIR QUALITY
OAT	OUTDOOR AIR TEMP. SEN
OFM	OUTDOOR FAN MOTOR
OFR	OUTDOOR FAN RELAY
OFO	OUTDOOR FAN ON RELAY
OL	OVERLOAD
PER	POWER EXHAUST RELAY
PH	PHASE
PL	PLUG ASSEMBLY
POT	POTENTIOMETER
PMR	PHASE MONITOR RELAY
PS	PRESSURE SWITCH
PWM	PULSE WIDTH MODULATION
QT	QUADRUPLE TERMINAL
R	THERMOSTAT POWER
RAT	RETURN AIR TEMP. SENSOR
RDB	REFRIGERANT DISSIPATION BOARD
RDS	REFRIGERANT DISSIPATION SENSOR
RDV	REHEAT DISCHARGE VALVE
RH	RELATIVE HUMIDITY
RLV	REHEAT LIQUID VALVE
RNET	LOCAL ACCESS NETWORK
RVS	REVERSING VALVE SOLENOID
SAT	SUPPLY AIR TEMP SENSOR
SDP	SYSTEM DISCHARGE PRESSURE
SPRH	SPACE RELATIVE HUMIDITY
SPT	SPACE TEMPERATURE SENSOR
SPTO	SPACE TEMPERATURE OFFSET
SSP	SYSTEM SUCTION PRESSURE
SW	SWITCH
TB	TERMINAL BLOCK
TDR	TIME DELAY RELAY
TRAN	TRANSFORMER
UCB	UNIT CONTROL BOARD
W1	1st STAGE OF HEATING CALL
W2	2nd STAGE OF HEATING CALL
Y1	1st STAGE OF COOLING CALL
Y2	2nd STAGE OF COOLING CALL

48TC007811 | A

Fig. 47 — Typical 48QE(G/H) 05-06 Power Wiring Diagram, SystemVu, 460V-3-60 Shown

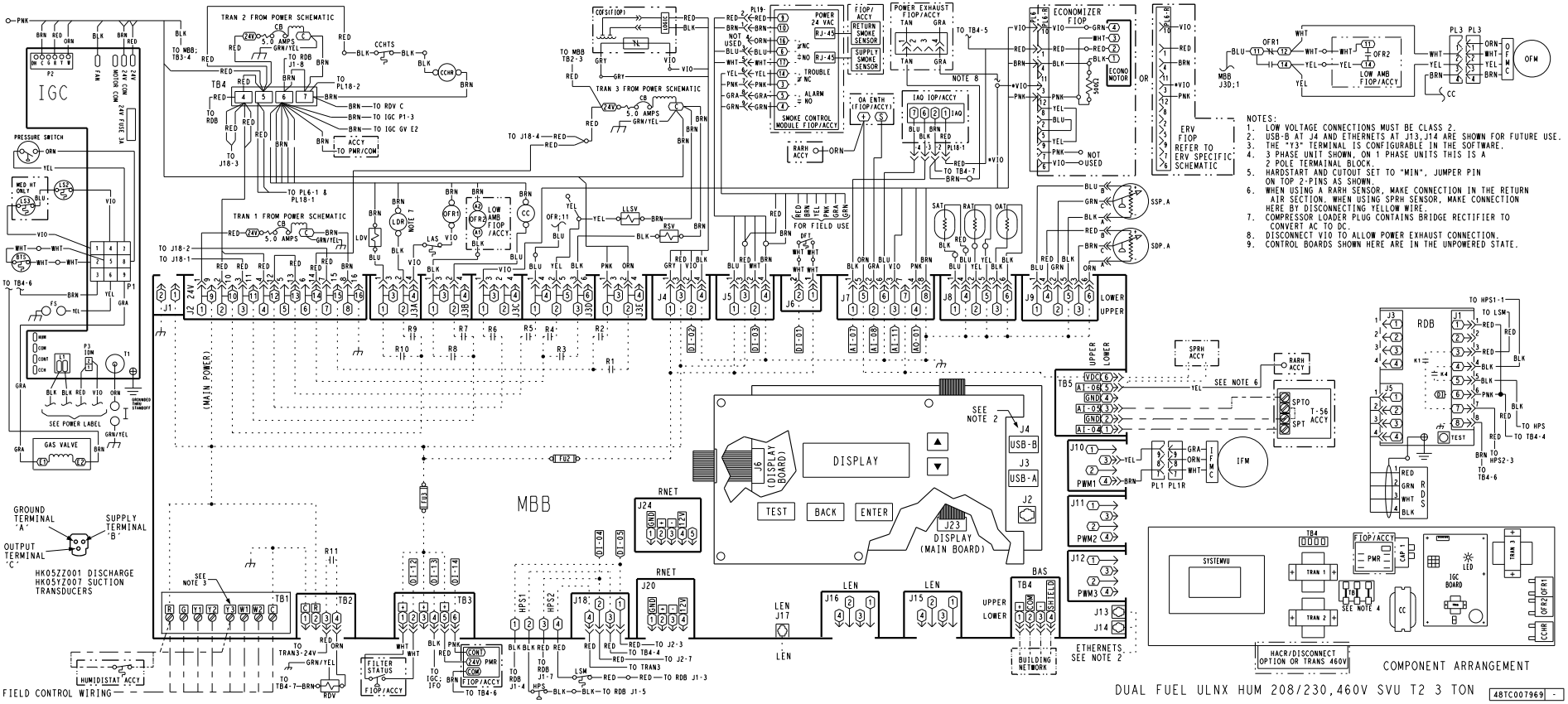

Fig. 48 — Typical Control Wiring Diagram, SystemVu Controller, 48QE(G/H) 04 with Humidi-MiZer Shown

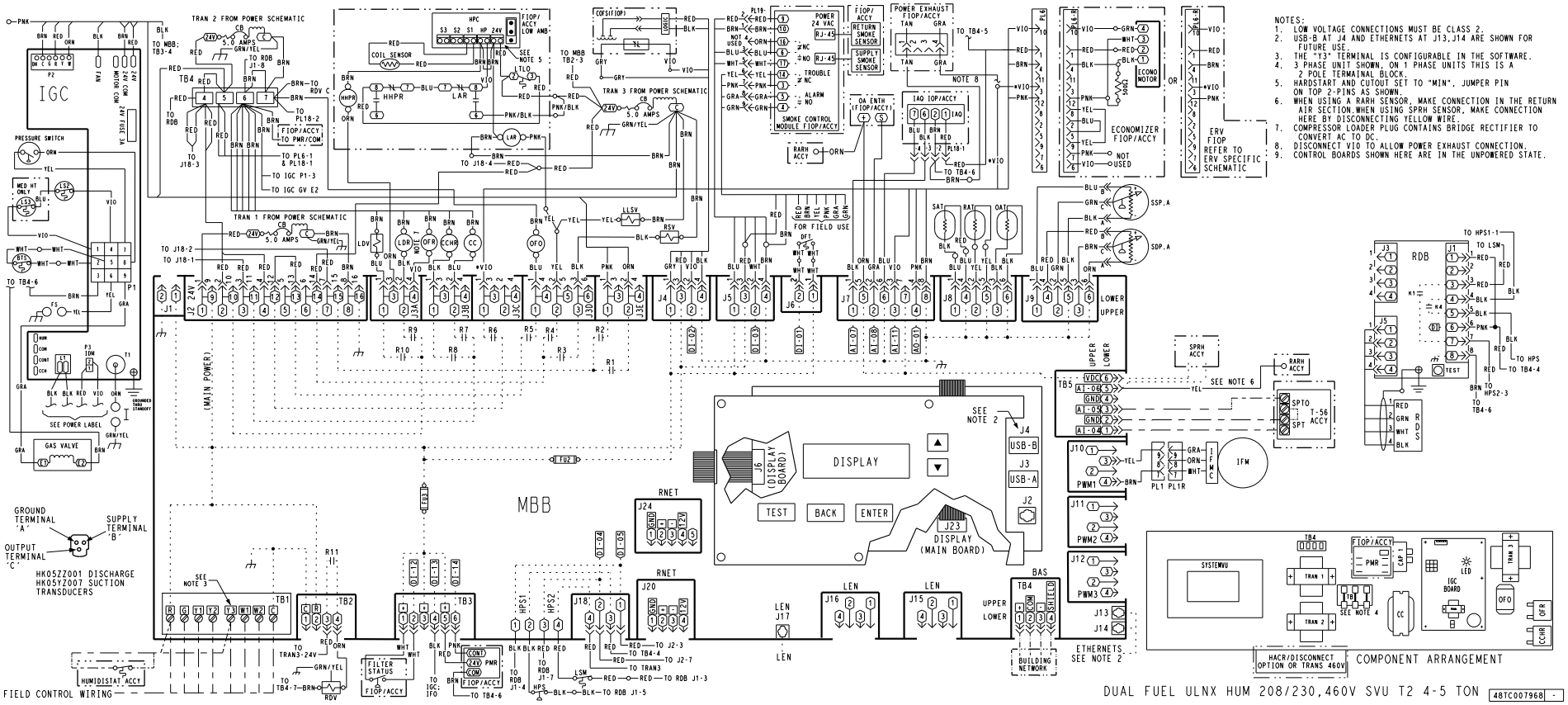

Fig. 49 — Typical Control Wiring Diagram, SystemVu Controller, 48QE(G/H) 05-06 with Humidi-MiZer Shown

Integrated Gas Controller

This unit contains an Integrated Gas Controller (IGC) board. The IGC control board uses a flue gas pressure switch that senses pressure drop in the heat exchanger due to the combustion inducer. See Fig. 50.

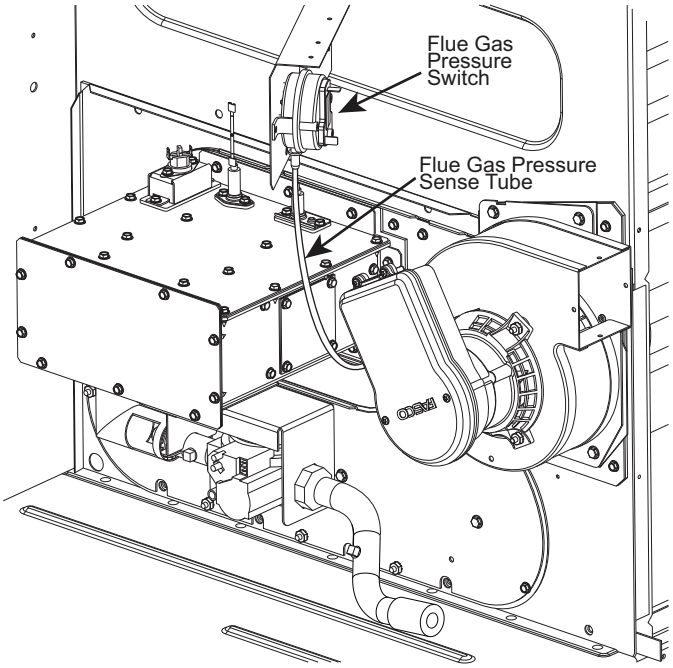

Fig. 50 — Flue Gas Pressure Switch and Pressure Sense Tube (Typical Location)

When the thermostat calls for heating, power is sent to W on the Integrated Gas Controller (IGC) board. An LED (light emitting diode) on the IGC board turns on and remains on during normal operation. A check is made to ensure that the rollout switch and limit switch are closed, and that the pressure switch is open. If the check was successful, the induced draft motor is energized. When the pressure in the heat exchanger is low enough to close the pressure switch, the ignition activation period begins. Once ignition occurs, the IGC board will continue to monitor the condition of the rollout switch, the limit switches, the pressure switch, and the flame sensor. Assuming the unit is controlled through a room thermostat set for "fan auto," 45 seconds after ignition occurs, the indoor fan motor will energize, and the outdoor air dampers will open to their minimum position. If the "over temperature limit" opens prior to the start of the indoor fan blower, the IGC will shut down the burners, and the control will shorten the 45 second delay to 5 seconds less than the time to trip the limit. For example, if the limit trips at 37 seconds, the control will change the "fan on delay" from 45 seconds to 32 seconds. Once the "fan on delay" has been modified, it will not change back to 45 seconds unless power is reset to the control.

When the thermostat is satisfied, W1 opens and the gas valve closes, interrupting the flow of gas to the main burners. If the call for W1 lasted less than 1 minute, the heating cycle will not terminate until 1 minute after W1 became active. If the unit is controlled through a room thermostat set for fan auto, the indoor fan motor will continue to operate for an additional 45 seconds and then stop. An LED indicator is provided on the IGC to monitor operation.

See Fig. 51 for IGC board component layout. See Fig. 44 for typical IGC control wiring to the SystemVu MBB (main base board). Table 5 lists the IGC Board LED Alarm Codes.

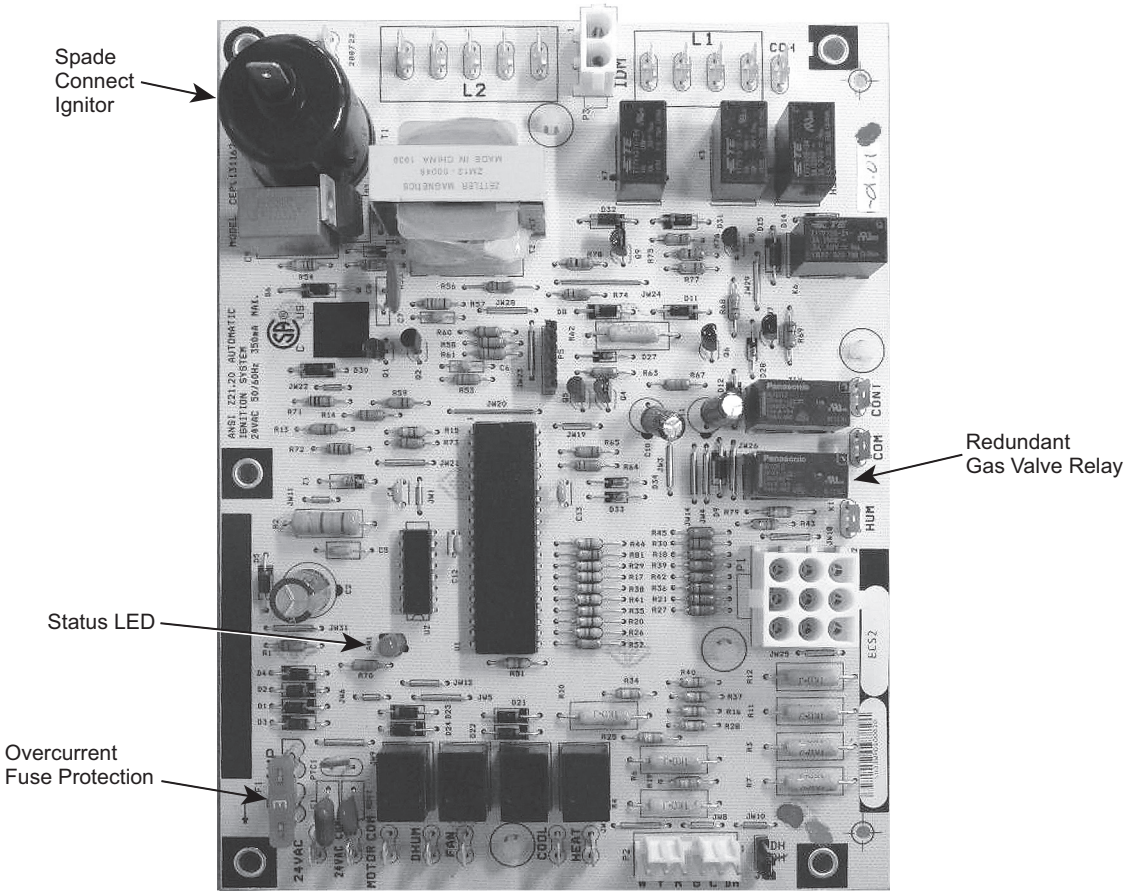

Fig. 51 — IGC Board Component Layout

Table 5 — IGC Board LED Alarm Codes[a,b,c,d]

LED FLASH CODE	DESCRIPTION	ACTION TAKEN BY CONTROL	RESET METHOD	PROBABLE CAUSE
On	Normal Operation	—	—	—
Off	Hardware Failure	No gas heating.	—	Loss of power to the IGC. Check power to unit, 24-v circuit breaker, transformer, and wiring to the IGC.
1 Flash	Missing or Blown Fuse	No gas heating.	Replace fuse.	Check fuse on IGC.
2 Flashes	Limit Switch Fault	Gas valve and igniter Off. Indoor fan and inducer On.	Limit switch closed or heat call (W) Off.	High temperature limit switch is open. Check the operation of the indoor (evaporator) fan motor. Ensure that the supply-air temperature rise is within the range on the unit nameplate. Check wiring and limit switch operation.
3 Flashes	Flame Sense Fault	Indoor fan and inducer On.	Flame sense normal. Power reset for LED reset.	The IGC sensed a flame when the gas valve should be closed. Check wiring, flame sensor, and gas valve operation.
4 Flashes	Four Consecutive Limit Switch Fault	No gas heating.	Heat call (W) Off. Power reset for LED reset.	Four consecutive limit switch faults within a single call for heat. See Limit Switch Fault.
5 Flashes	Ignition Fault	No gas heating.	Heat call (W) Off. Power reset for LED reset.	Unit unsuccessfully attempted ignition for 15 minutes. Check igniter and flame sensor electrode spacing, gaps, etc. Check flame sense and igniter wiring. Check gas valve operation and gas supply.
6 Flashes	Induced Draft Motor/Pressure Switch Fault	If heat off: no gas heating. If heat on: gas valve Off and inducer On.	Inducer sense normal or heat call (W) Off.	Inducer sense On when heat call Off, or inducer sense Off when heat call On. Check wiring, voltage, and operation of IGC motor. Check inducer motor and flue gas pressure switch.
7 Flashes	Rollout Switch Lockout	Gas valve and igniter Off. Indoor fan and inducer On.	Power reset.	Rollout switch has opened. Check gas valve operation. Check induced-draft blower wheel is properly secured to motor shaft.
8 Flashes	Internal Control Lockout	No gas heating.	Power reset.	IGC has sensed internal hardware or software error. If fault is not cleared by resetting 24-v power, check for bad gas valve, replace the IGC.
9 Flashes	Temporary Software Lockout	No gas heating.	One hour auto reset or power reset.	Electrical interference is disrupting the IGC software.

NOTE(S):

a. There is a 3-second pause between alarm code displays.
b. If more than one alarm code exists, then all applicable alarm codes will be displayed in numerical sequence.
c. Alarm codes on the IGC will be lost if power to the unit is interrupted.
d. If the flue gas inducer pressure switch is stuck closed on a W1 call, then the unit will sit idle, and the IGC will produce no fault codes.

LEGEND

IGC — Integrated Gas Unit Control
LED — Light-Emitting Diode

Leak Dissipation System

48QE(G/H) units use R-454B refrigerant. These units are equipped with a factory installed R-454B leak dissipation system to ensure safe operation in the event of a refrigerant leak. This systems consists of an A2L sensor (Fig. 52) and the Refrigerant Dissipation Board (RDB) (see Fig. 53) which are located in the Indoor Coil section of the unit (see the view labeled "BACK" in Fig. 2 on page 9). The A2L sensor is located between the indoor coil and the air filters.

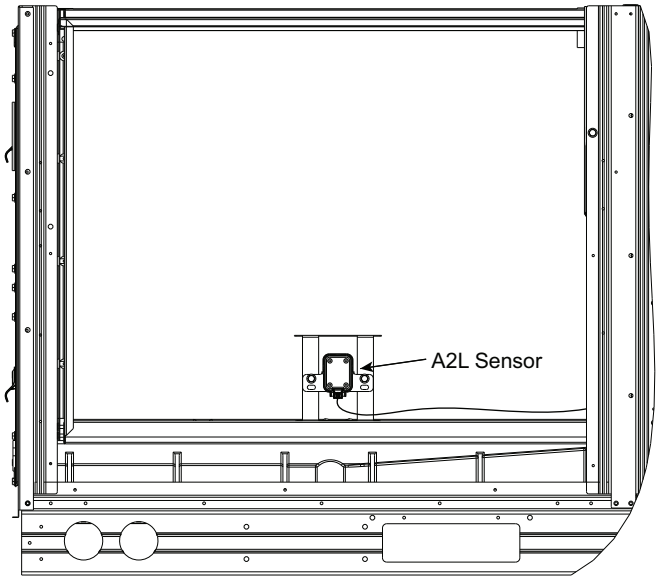

Fig. 52 — Location of AL2 Sensor

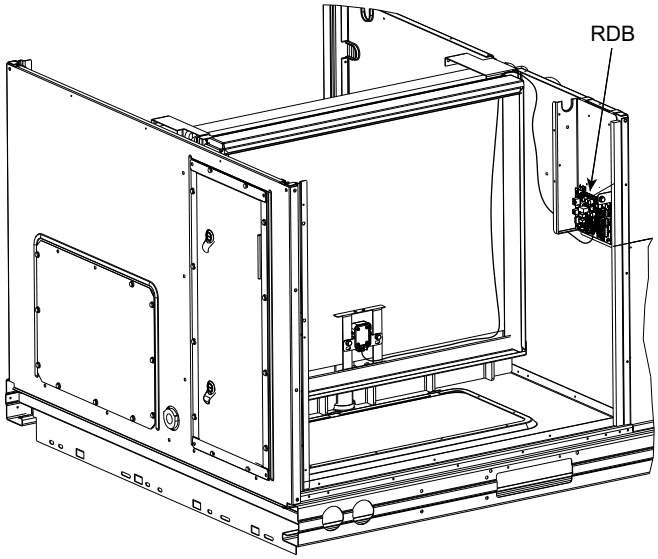

Fig. 53 — Location of Refrigerant Dissipation Board (RDB) (shown with dust cover removed)

The A2L detection sensor communicates via a wiring harness to the RDB. The sensor harness is routed on the bottom of the filter rack towards the unit bulkhead and secured with wire ties. The sensor harness then runs up the side of the filter rack and exits over the top of the rack towards the RDB.

NOTE: The drain wire must be properly connected to the ground lug on the RDB via the quick connect and ground harness. Failure of proper sensor harness grounding can lead to false dissipation events.

SEQUENCE OF OPERATION

The control functions as an R-454B refrigerant dissipation system. If the refrigerant detection sensor sends a signal indicating a refrigerant leak, the RDB will prevent heating and cooling operation and begin dissipating the sensed refrigerant with a blower request. The refrigerant dissipation board will display a flash code from the yellow status LED (see Fig. 54) indicating the sensor that detected the refrigerant. See Fig. 56 on page 36 for the full text on the Dissipation Control dust cover label.

When the sensor signal indicates the refrigerant has dissipated, the RDB yellow status LED will display a flash code 3 and return to its normal state and allow unit operations after a 5 minute delay.

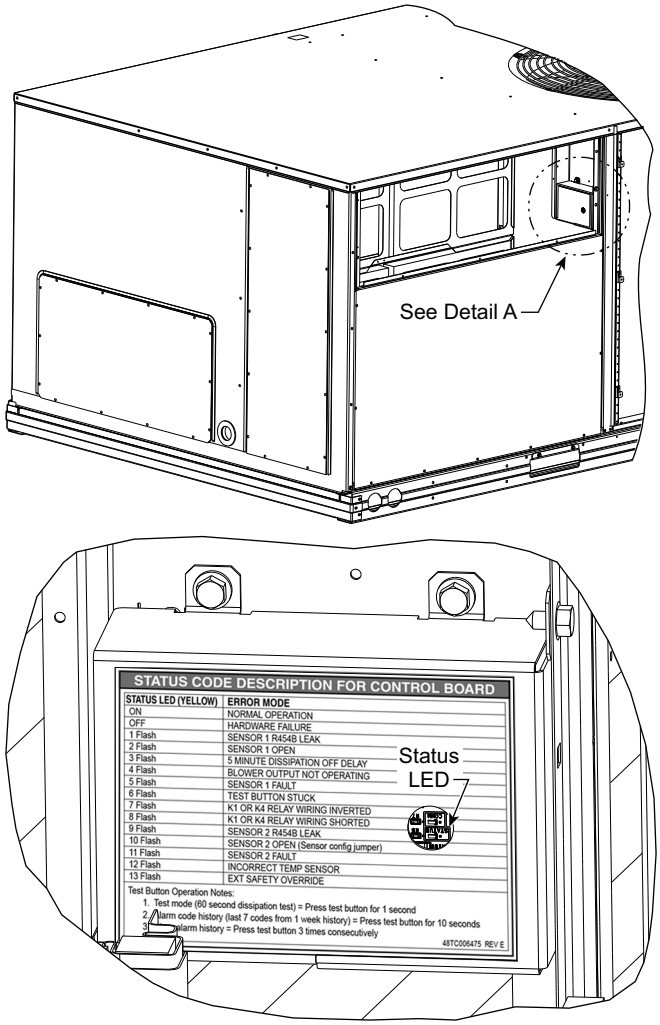

Fig. 54 — Yellow STATUS LED

VVT AND VAV ZONING APPLICATIONS

For applications where this unit will be integrated with a zoning system, including VAV (variable air volume) dampers, VVT (variable volume and temperature) dampers, and series or parallel fan powered boxes, the building zone damper(s) must open to allow the system to meet the minimum dissipation circulation rate during A2L dissipation mode. See Table 7 for minimum dissipation circulation rate by unit size and configuration. Electric reheat in zone boxes and duct heaters must be turned off during A2L dissipation mode. For fan powered air terminal boxes, the terminal fan may be used during A2L dissipation mode.

Carrier Open Airside Linkage

For applications using only Carrier Open zoning controls configured for Airside Linkage, the Linkage mode is set to Off when A2L dissipation is active. Off mode sets the terminal damper to 70% and disables the terminal fan and heater.

Carrier CCN Linkage Controls

For applications using only Carrier CCN (Carrier Comfort Network®) zoning controls configured for Airside Linkage, the Linkage mode is set to Off when A2L dissipation is active. Off mode sets the terminal damper to 70% and disables the terminal fan and heater.

All Other Controls

For applications using all other zoning controls, including Carrier controls not configured for Linkage, the zoning controls must be configured to open the zone dampers to achieve the minimum dissipation airflow and disable electric duct heaters when A2L dissipation mode is active. This unit provides the alarm relay on the RDB (see Fig. 55) and on SystemVu™ units the BACnet®[1] point BV:9095 to indicate when A2L dissipation is active. The alarm relay on J2 of the dissipation control board is a dry contact and can be wired as normally open or normally closed.

LEAK DISSIPATION SYSTEM SELF-TEST

Power on the unit and verify proper functioning of equipment. The yellow Status LED on the RDB should be steady (see Fig 54). If flash codes are present, see Troubleshooting on page 36.

NOTE: Operation of the Test Mode is only possible if no faults exist on the dissipation board.

Remove the dust cover from the RDB to access the Test button (see Fig. 55). The Test button is located above the COMM LED.

Press the Test button on the RDB to ensure proper dissipation system operation under each test condition listed below. After pressing the Test button, system will enter Dissipation Mode for 60 seconds to help verify correct operation.

1. Third-party trademarks and logos are the property of their respective owners.

IMPORTANT: Press the Test button for roughly ONE SECOND to enter Test Mode. Pressing the Test button for a longer periods enables different functions (see Table 6).

Table 6 — Dissipation Board Test Button Functions

HOLD BUTTON TIME (SEC)	FUNCTION
1-4	Dissipation Mode for 60 seconds
5-29	Display flash code history
30+	Flash code 6
3 Rapid Presses	Clear flash code history

DISSIPATION AIR FLOW

Ensure that the unit is able to meet the minimum required dissipation mode airflows. These required minimum airflow rates during Dissipation Mode are listed in Table 7. They are based on the total system refrigerant charge quantity.

Table 7 — Minimum Dissipation Air Flows

MINIMUM DISSIPATION AIR FLOW (cfm)	
UNIT	**cfm**
48QE(G/H)M04	320
48QE(G/H)M05	410
48QE(G/H)M06	430
48QE(G/H)N04	430
48QE(G/H)N05	610
48QE(G/H)N06	530

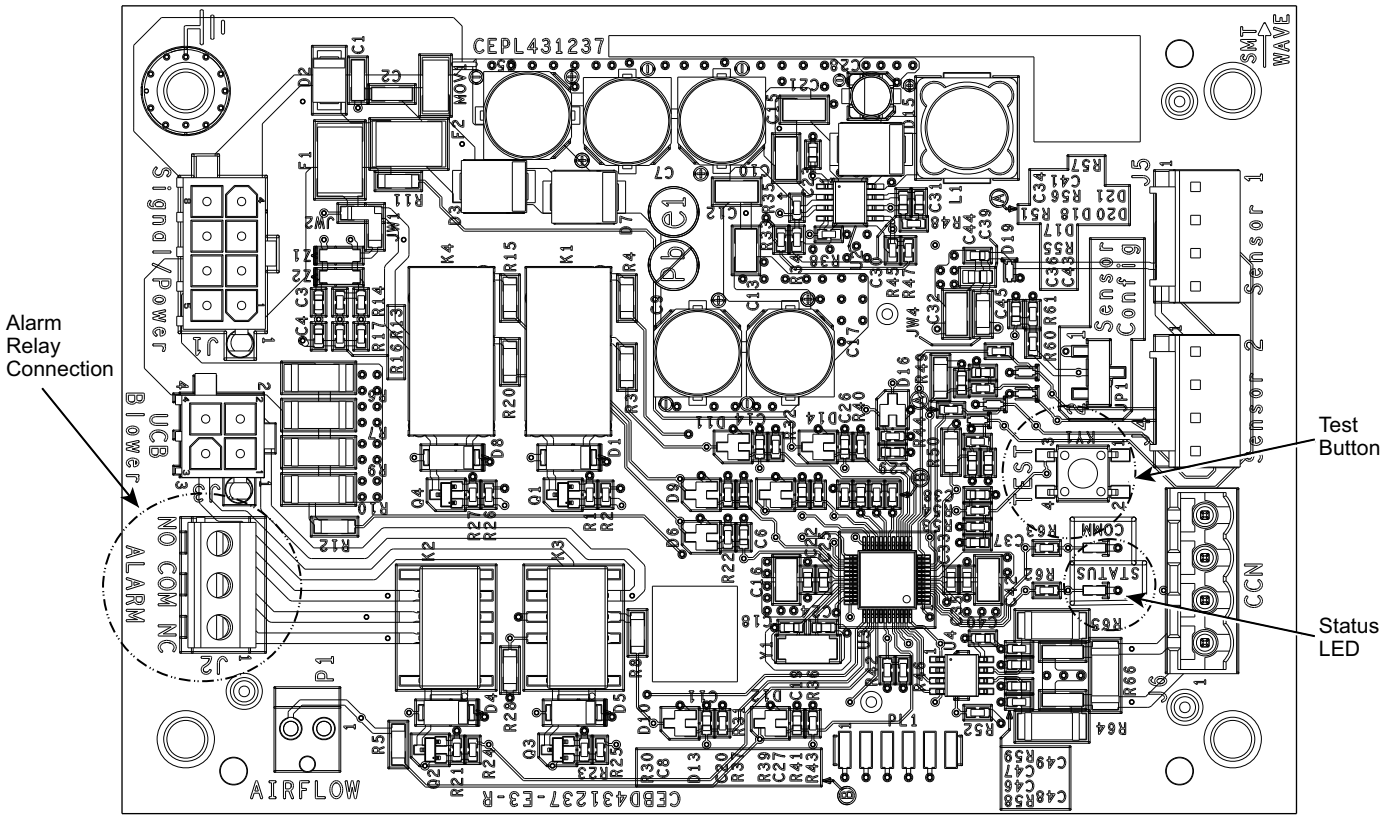

Fig. 55 — Refrigerant Dissipation Board (RDB) — shown without dust cover

MINIMUM CONDITIONED SPACE AREA

The space area served by ducted equipment with A2L refrigerant is restricted by building code based on refrigerant volume that the releasable to the conditioned space served by the duct system.

Determine the conditioned space area by calculating the floor area (room length x room width) of all spaces served by a common duct system and adding them all together to get the total conditioned space area.

Compare the calculated total conditioned space area to the minimum conditioned space area (TA_{min}) listed in Table 8, based on the unit size and configuration (with or without Humidi-MiZer).

Table 8 — Minimum Conditioned Space Area (MCSA or TA_{min})

UNIT	(TA_{MIN})[a]	
	Sq Ft	Sq Meter
48QE(G/H)M04	353	33
48QE(G/H)M05	444	42
48QE(G/H)M06	470	44
48QE(G/H)N04	470	44
48QE(G/H)N05	666	62
48QE(G/H)N06	573	53

NOTE(S):

a. TA_{min} is based on a minimum ceiling height of 7.2 ft (2.2 m) and the worst-case unit refrigerant charge.

If the space area is above the minimum conditioned space area listed in Table 8 based on unit size and configuration, no action is needed.

If the conditioned space area is below the minimum conditioned space area listed in Table 8 based on unit size and configuration, then additional ventilation may be required. Refer to local code, UL-60335-2-40, or ASHRAE standard 15.

⚠ CAUTION

Do not install an ignition source or potential ignition source in a space where the total conditioned area is below the minimum total conditioned area (TA_{min}), unless a flame arresting device has been installed.

⚠ ADVERTISSEMENT

N'installez pas de source d'inflammation ou de source d'inflammation potentielle dans un espace où la surface totale conditionnée est inférieure à la surface totale conditionnée minimale (TA_{min}), à moins qu'un dispositif pare-flamme n'ait été installé.

TROUBLESHOOTING

Table 9 details the required operational checks to ensure proper dissipation system function.

Figure 56 shows the flash codes displayed on the RDB.

NOTE: On SystemVu units a fault F220 will be displayed on the screen anytime there is a dissipation alarm. This indicates that voltage has been interrupted to the HPS1 and HPS2 terminals simultaneously via the K1 and K4 relays on the RDB.

For all flash codes, first try power cycling the system to remove the code.

No Power

Verify the wiring to/from pins 1 and 8 on the power harness plug. Check the 24V system wiring from the transformer.

See Table 10 for details on the operating status and troubleshooting of the Dissipation system for the various flash codes.

Table 9 — Dissipation System Required Operational Checks

TEST NO.	UNIT DEMAND	COMPRESSOR	INDOOR FAN	GAS HEAT
NORMAL OPERATION				
1	None	Off	Off	Off
2	Cool	On	On	Off
3	Heat	On	On	On
DISSIPATION ACTIVATED				
4	None	Off	On	Off
5	Cool	Off	On	Off
6	Heat	Off	On	Off

STATUS CODE DESCRIPTION FOR CONTROL BOARD

STATUS LED (YELLOW)	ERROR MODE
ON	NORMAL OPERATION
OFF	HARDWARE FAILURE
1 Flash	SENSOR 1 R454B LEAK
2 Flash	SENSOR 1 OPEN
3 Flash	5 MINUTE DISSIPATION OFF DELAY
4 Flash	BLOWER OUTPUT NOT OPERATING
5 Flash	SENSOR 1 FAULT
6 Flash	TEST BUTTON STUCK
7 Flash	K1 OR K4 RELAY WIRING INVERTED
8 Flash	K1 OR K4 RELAY WIRING SHORTED
9 Flash	SENSOR 2 R454B LEAK
10 Flash	SENSOR 2 OPEN (Sensor config jumper)
11 Flash	SENSOR 2 FAULT
12 Flash	INCORRECT TEMP SENSOR
13 Flash	EXT SAFETY OVERRIDE

Test Button Operation Notes:

1. Test mode (60 second dissipation test) = Press test button for 1 second
2. Alarm code history (last 7 codes from 1 week history) = Press test button for 10 seconds
3. Clear alarm history = Press test button 3 times consecutively

48TC006475 REV E

Fig. 56 — Dissipation Control Cover Label

Table 10 — Status LED Troubleshooting Table

STATUS LED	REASON	CONTROL VERBIAGE	MODE
1 Flash	Sensor 1 ≥ 20% LFL.	REFRIG DISSIPATION ACTIVE	Dissipation in Process
2 Flash	Sensor 1 Open.	REFRIG SENSOR OPEN	Dissipation in Process
3 Flash	5 Minute Blower Operating, Sensor < 20% LFL and sensors are not opened (done after fault 1, 2, 9 and 10).	DISSIPATION OFF DELAY ACTIVE	Dissipation in Process
4 Flash	0 VAC sensed on Blower output.	BLOWER OUTPUT NOT OPERATING	Dissipation in Process
5 Flash	Fault with the first A2L digital sensor.	SENSOR 1 FAULT	Dissipation in Process
6 Flash	If KY1 is stuck pressed for more than 30 seconds.	TEST BUTTON STUCK	To prevent a shorted KY1 to keep the dissipation running continuously.
7 Flash	Y out switched with Y in or W out switched with W in.	Y (K4) OR W (K1) WIRING INVERTED	Normal mode
8 Flash	Y or W shorted (relay detects both sides are high).	Y (K4) OR W (K1) OUTPUT SHORTED TO Y (K4) OR W (K1) INPUT	Normal mode
9 Flash[a]	Sensor 2 ≥ 20% LFL.	SENSOR 2 DISSIPATION ACTIVE	Dissipation in Process
10 Flash[a]	Sensor 2 Open.	SENSOR 2 OPEN	Dissipation in Process
11 Flash[a]	Fault with the second A2L digital sensor.	SENSOR 2 FAULT	Dissipation in Process
12 Flash	Incorrect sensor connected on sensor 1 or sensor 2 ports.	OVERCURRENT INCORRECT SENSOR	Normal mode
13 Flash	External Safety input signal is lost. Indicates another unit safety will override dissipation.	EXT SAFETY OVERRIDE	Normal mode

NOTE(S):

a. There is only one sensor mounted in these units. This table represents the standard label being put on all commercial equipment. The hardware changes only allow one sensor to be connected to the board; the software remains the same for a one or two sensor board. Although unlikely these flash codes may appear if the board malfunctions.

LEGEND

LFL — Lower Flammable Limit

SystemVu™ Controller

For details on operating 48QE(G/H)*04-06 units equipped with the factory-installed SystemVu controller option refer to the *FEQ/GEQ/QE Series Single Package Rooftop Units with SystemVu Controller Controls, Start-up, Operation and Troubleshooting* manual.

Controller Options

LOW AMBIENT

48QE(G/H) units come equipped with the SystemVu controller, refer to its installation control manual for details on adjusting "Cooling Lock-Out" setting and configure for the specific job requirements.

Smoke Detectors

Smoke detectors are available as factory-installed options on 48QE(G/H) models. Smoke detectors may be specified for Supply Air only or for Return Air without or with economizer, or in combination of Supply Air and Return Air. Return Air smoke detectors are arranged for vertical return configurations only. All components necessary for operation are factory-provided and mounted. The unit is factory-configured for immediate smoke detector shutdown operation; additional wiring or modifications to unit terminal board may be necessary to complete the unit and smoke detector configuration to meet project requirements.

Units equipped with factory-optional Return Air smoke detectors require a relocation of the sensor module at unit installation. See Fig. 57 for the as-shipped location.

COMPLETING RETURN AIR SMOKE SENSOR INSTALLATION

1. Unscrew the two screws holding the Return Air Smoke Detector assembly. See Fig. 58, Step 1. Save the screws.
2. Turn the assembly 90 degrees and then rotate end to end. Make sure that the elbow fitting is pointing down. See Fig. 58, Step 2.
3. Screw the sensor and detector plate into its operating position using screws from Step 1. See Fig. 58, Step 3.
4. Connect the flexible tube on the sampling inlet to the sampling tube on the basepan.

Step 14 — Install Accessories

Available accessories include:

- Roof curb
- Thru-base connection kit (must be installed before unit is set on curb)
- Manual outside air damper
- Two-Position motorized outside air damper
- Power exhaust
- Differential dry-bulb sensor
- Outdoor enthalpy sensor
- Differential enthalpy sensor
- Low ambient controls
- Thermostat / Sensors
- CO_2 sensor
- Louvered hail guard
- Phase monitor control

Refer to separate installation instructions for information on installing these accessories.

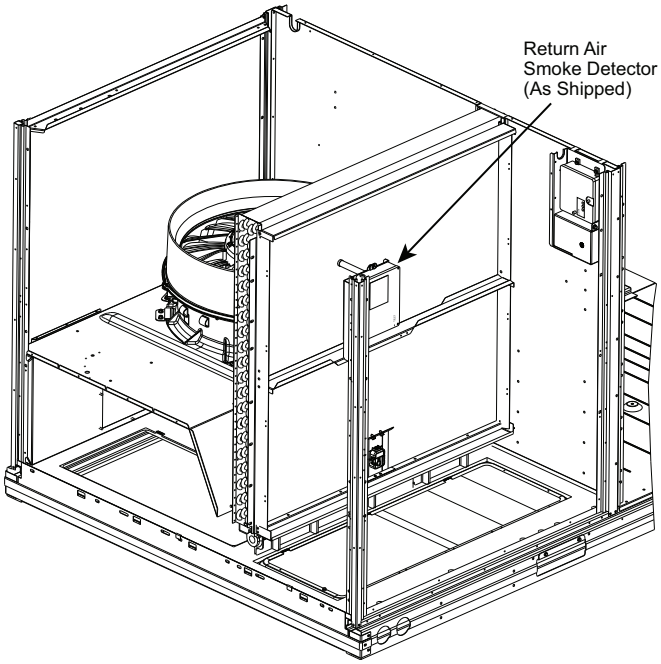

Fig. 57 — Return Air Smoke Detector, Shipping Position

ADDITIONAL APPLICATION DATA

Refer to the application data document "Factory Installed Smoke Detectors for Small and Medium Rooftop Units 2 to 25 Tons" for discussions on additional control features of these smoke detectors including multiple unit coordination.

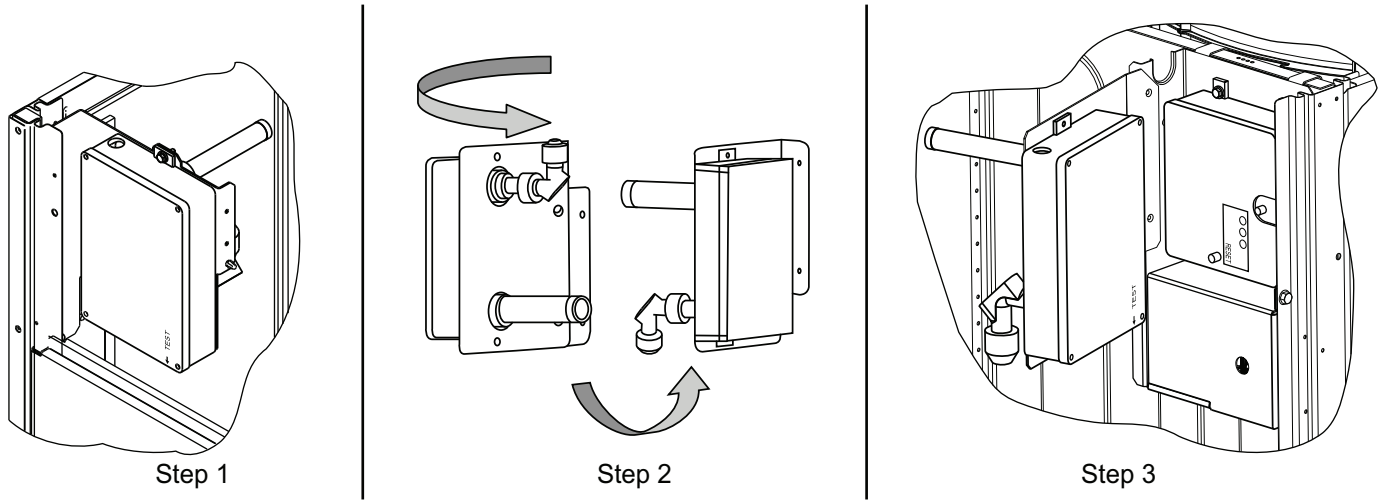

Fig. 58 — Completing Installation of Return Air Smoke Sensor

Step 15 — Fan Speed Set Up

NOTE: The Indoor Fan motor is equipped with an internal protection relay that is designed to disable unit operation if it detects a problem. See Typical Wiring Diagram (Fig. 44) for the red wires in the Indoor fan plug.

Fan Speed settings are accessed through the SystemVu interface.

1. Check the job specifications for the CFM (cubic feet per minute) and ESP (external static pressure) required.
2. Using the chart on the Fan Speed Set Up labels (see Fig. 59), calculate the RPM from the CFM and ESP for the base unit plus any field accessories (as listed on the label).

NOTE: The Fan Speed Set Up labels are located on the High Voltage cover in the Control Box.

3. Press any key on the SystemVu interface to activate the display backlight and then press the MENU key.
4. Using the UP and DOWN arrow keys highlight SETTINGS and then press ENTER.
5. Use the DOWN arrow key highlight the UNIT CONFIGURATIONS menu then press ENTER.
6. Highlight INDOOR FAN and then press ENTER.
7. Refer to the job specifications to set the following, determining the values per the RPM Calculator label (see Fig. 59). Use the UP and DOWN arrow keys and the BACK key to set the values. Press ENTER after setting each value to continue to the next selection.

- IDF VENT SPD
- IDF HEAT SPD
- IDF HIGH COOL SPD
- IDF FREE COOL SPD

For further details see the *FEQ/GEQ/QE Series Single Package Rooftop Units with SystemVu Controller Controls, Start-up, Operation and Troubleshooting* manual.

SystemVu™

FAN SPEED SETUP (RPM)

MAIN MENU:

SETTINGS
→ UNIT CONFIGURATIONS
→ INDOOR FAN
→ IDF VENT SPD -RPM
→ IDF HEAT SPD -RPM
→ IDF HIGH COOL SPD -RPM
→ IDF FREE COOL SPD -RPM

↓ DETERMINE RPM FROM BELOW ↓

48TC003136 REV. B

RPM Calculator

UNIT MODEL NUMBER / CFM	ESP in. wg 0.2	0.4	0.6	0.8	1.0	1.2	1.4	1.6	1.8	2.0
3000	1250	1348	1441	1528	1610	1688	1762	1832	1899	1963
3250	1336	1428	1515	1598	1677	1753	1824	1893	1959	2021
3500	1423	1509	1591	1670	1746	1819	1888	1955	2020	2081
3750	1510	1591	1669	1744	1817	1887	1954	2019	2082	2143
4000	1598	1675	1749	1820	1890	1957	2022	2085	2146	
4250	1687	1759	1829	1898	1964	2029	2092	2153		
4500	1776	1845	1912	1977	2041	2103	2163			
4750	1866	1931	1995	2057	2118	2178				
5000	1955	2018	2079	2138	2197					
Field Accessories:										
Economizer	89	89	89	89	89	89	89	89	89	89

NOTE: Values in the Field Accessories section are RPM adders.

Fig. 59 — Example of Fan Speed Set Up Labels for SystemVu™ Controls

TEMPORARY FURNACE OPERATION DURING CONSTRUCTION

The furnace may be operated during the finishing stage of construction. To ensure proper operation follow the steps below.

1. Prior to the finishing stage of construction, ensure that return air and vent openings are covered to minimize penetration of dust and construction debris into the unit.
2. Interior drywall installation shall be completed and covered with paint or primer prior to unit operation.
3. Premises shall be substantially free of debris and dust.
4. Ensure all return and vent coverings have been removed.
5. Verify the return ducts and supply ducts are connected, are free from obstructions, are clean, and are properly sealed.
6. Ensure proper vent installation per installation instructions.
7. Ensure gas piping has been connection per installation instructions.
8. Verify that the gas piping is free of leaks.
9. Furnace to be set to operate under appropriate control to ensure proper operation.
10. Minimum MERV 11 air filters to be installed during the finishing stages of construction.
11. Set furnace input rate and temperature rise per rating plate marking.
12. Ensure means for providing combustion air in accordance with the manufacturer's shipped installation instructions.
13. Return air temperature to be maintained between 55°F (13°C) and 80°F (27°C).
14. Furnace shall be set up to operate in accordance with installation instructions and shall be verified for operating conditions including ignition, input rate, temperature rise, and venting.
15. Install new filters as per installation instructions prior to final occupancy.

COMPRESSOR ROTATION

⚠ CAUTION

EQUIPMENT DAMAGE HAZARD

Failure to follow this caution can result in premature wear and damage to equipment.

Scroll compressors can only compress refrigerant if rotating in the right direction. Reverse rotation for extended times can result in internal damage to the compressor. Supply fan rotation cannot be used to determine compressor rotation as the indoor fan motor is a ECM motor and will always turn the correct way no matter what the phasing is.

Scroll compressors are sealed units and cannot be repaired on site location.

NOTE: When the compressor is rotating in the wrong direction, the unit makes an elevated level of noise and does not provide cooling.

On 3-phase units with scroll compressors, it is important to be certain compressor is rotating in the proper direction. To determine whether or not compressor is rotating in the proper direction:

1. Connect service gauges to suction and discharge pressure fittings.
2. Energize the compressor.
3. The suction pressure should drop and the discharge pressure should rise, as is normal on any start-up.

NOTE: If the suction pressure does not drop and the discharge pressure does not rise to normal levels, the evaporator fan is probably also rotating in the wrong direction.

4. Turn off power to the unit.
5. Reverse any two of the three unit power leads.
6. Reapply electrical power to the compressor. The suction pressure should drop and the discharge pressure should rise which is normal for scroll compressors on start-up.
7. Replace compressor if suction/discharge pressures are not within specifications for the specific compressor.

The suction and discharge pressure levels should now move to their normal start-up levels.

FASTENER TORQUE VALUES

Table 11 details the torque values for the fasteners referenced in this installation instruction.

Table 11 — Fastener Torque Values

FASTENER	TORQUE VALUE
Heat shield screws	30 in.-lb (3.4 Nm) ±2 in.-lb (0.2 Nm)
Stator motor mounting screws	23 in.-lb (2.6 Nm) ±2 in.-lb (0.2 Nm)
Fan rotor mounting screws	23 in.-lb (2.6 Nm) ±2 in.-lb (0.2 Nm)
Limit switch screws	50 in.-lb (5.7 Nm) ±5 in.-lb (0.6 Nm)
Fan deck bracket screws	50 in.-lb (5.7 Nm) ±5 in.-lb (0.6 Nm)
Condenser fan motor mounting screws	30 in.-lb (3.4 Nm) ±3 in.-lb (0.3 Nm)
Condenser fan hub set screw	60 in.-lb (6.8 Nm) ±5 in.-lb (0.6 Nm)
Compressor mounting bolts	65 in.-lb (7.3 Nm) ±10 in.-lb (1.2 Nm)
Control box grounding lug	20 in.-lb (2.25 Nm) ±2 in.-lb (0.2 Nm)

TYPICAL UNIT PIPING

Each heat pump refrigeration system includes a compressor, accumulator, reversing valve, dual-function outdoor coil with vapor header check valve, cooling liquid line with a filter drier and a check valve, dual-function indoor coil with a vapor header check valve, and heating liquid line with a check valve and a strainer. These units have a single compressor-circuit. See Fig. 60 and Tables 12-14 for typical unit piping schematic. Dual-function outdoor and indoor coils are designed to provide parallel coil circuits during evaporator-function operation and converging coil circuits during the condenser-function operation.

Table 12 — 48QE(G/H)*04-06 — Cooling Mode

COMPONENT	STATUS/POSITION
Reversing Valve	Energized
Check Valve A	Closed
Check Valve B	Open
Check Valve C	Closed
Check Valve D	Open

Table 13 — 48QE(G/H)*04-06 — Heating Mode

COMPONENT	STATUS/POSITION
Reversing Valve	De-energized
Check Valve A	Open
Check Valve B	Closed
Check Valve C	Open
Check Valve D	Closed

Table 14 — 48QE(G/H)*04-06 — Defrost Mode

COMPONENT	STATUS/POSITION
Defrost Thermostat	Closed
Outdoor Fan(s)	Off
Reversing Valve	Energized
Check Valve A	Closed
Check Valve B	Open
Check Valve C	Closed
Check Valve D	Open

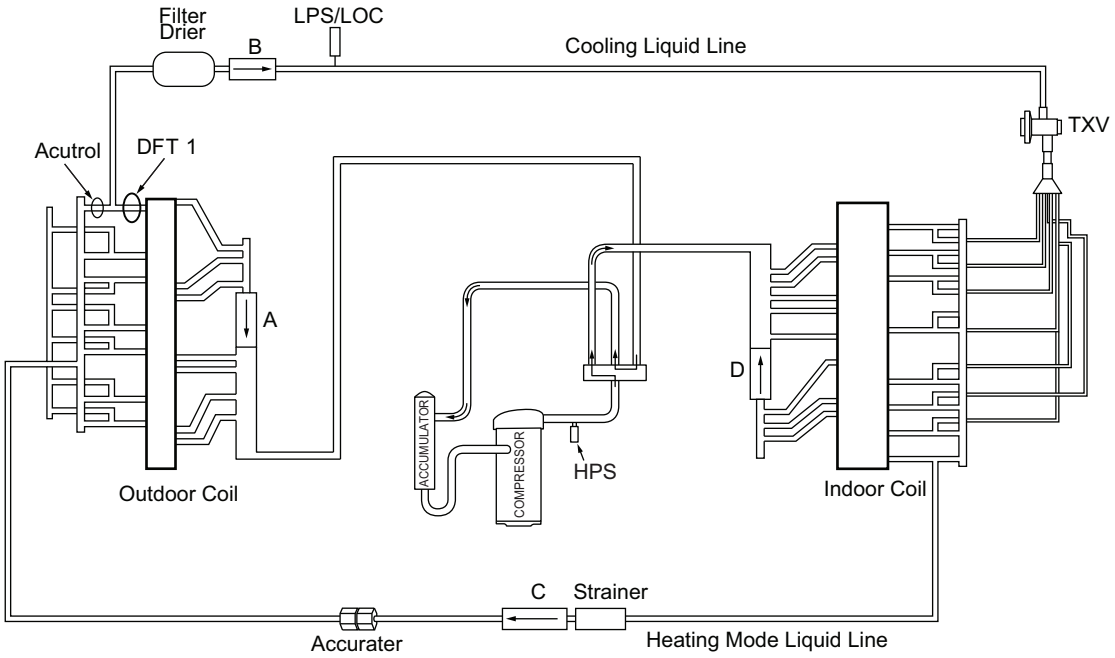

Fig. 60 — Typical Piping Schematic

© 2026 Carrier

START-UP CHECKLIST

48QE(G/H)*04-06 Single Package Rooftop Hybrid Heat Unit
(Remove and use for job file)

NOTE: To avoid injury to personnel and damage to equipment or property when completing the procedures listed in this start-up checklist, use good judgment, follow safe practices, and adhere to the safety considerations/information as outlined in preceding sections of this Installation Instruction document.

I. PRELIMINARY INFORMATION

MODEL NO. _____
JOB NAME _____
SERIAL NO. _____
ADDRESS _____
START-UP DATE _____
TECHNICIAN NAME _____
ADDITIONAL ACCESSORIES _____
_____

II. PRE-START-UP

Verify that all packaging materials have been removed from unit.	(Y/N) _____
Verify installation of outdoor air hood.	(Y/N) _____
Verify installation of flue exhaust and inlet hood.	(Y/N) _____
Verify that condensate connection is installed per instructions.	(Y/N) _____
Verify that all electrical connections and terminals are tight.	(Y/N) _____
Verify ground integrity with a continuity test.	(Y/N) _____
Verify gas pressure to unit gas valve is within specified range.	(Y/N) _____
Check gas piping for leaks.	(Y/N) _____
Check that indoor-air filters are clean and in place.	(Y/N) _____
Check that outdoor air inlet screens are in place.	(Y/N) _____
Verify that unit is level.	(Y/N) _____
Check fan propellers for location in housing/orifice and verify setscrew is tight.	(Y/N) _____
Verify that scroll compressors are rotating in the correct direction.	(Y/N) _____
Verify yellow LED light on dissipation board is steady.	(Y/N) _____
Verify the dissipation board test button will operate the indoor fan for 1 minute.	(Y/N) _____
Verify installation of thermostat or space sensor.	(Y/N) _____
Verify that crankcase heaters have been energized for at least 24 hours.	(Y/N) _____

III. START-UP

ELECTRICAL

Supply Voltage	L1-L2_____	L2-L3_____	L3-L1_____
Compressor Amps Stage 1	L1 _____	L2 _____	L3 _____
Compressor Amps Stage 2	L1 _____	L2 _____	L3 _____
Supply Fan Amps	L1 _____	L2 _____	L3 _____

TEMPERATURES

Outdoor-air Temperature	_____ °F DB (Dry Bulb)	
Return-air Temperature	_____ °F DB	_____ °F WB (Wet Bulb)
Cooling Supply Air Temperature	_____ °F	
Gas Heat Supply Air	_____ °F	

PRESSURES

Gas Inlet Pressure	_____ in. wg		
Gas Manifold Pressure	STAGE 1	_____ in. wg	
Refrigerant Suction	STAGE 1	_____ PSIG	
	STAGE 2	_____ PSIG	
Refrigerant Discharge	STAGE 1	_____ PSIG	
	STAGE 2	_____ PSIG	
Verify Refrigerant Charge using Charging Charts			(Y/N) _____

GENERAL

Economizer minimum vent and changeover settings to job requirements (if equipped). (Y/N) _____

Verify smoke detector unit shutdown by utilizing magnet test. (Y/N) _____

IV. HUMIDI-MIZER® SYSTEM START-UP

STEPS

1. Use Service Test mode to turn on maximum cooling.
   a. Turn on Cool A1 test under Cool Test menu (Y/N) _____
   b. Turn on Cir. A Loader Test under Cool Test Menu (Y/N) _____

OBSERVE AND RECORD

a. Suction pressure	_____ PSIG	_____ PSIG
b. Discharge pressure	_____ PSIG	_____ PSIG
c. Entering air temperature	_____ °F	_____ °F
d. Liquid temperature at outlet or reheat coil	_____ °F	_____ °F

   e. Confirm correct rotation for compressor (Y/N) _____
   f. Check for correct ramp-up of outdoor fan motor as condenser coil warms (Y/N) _____
2. Check unit charge per charging chart. (Y/N) _____
3. Switch unit to HIGH-LATENT mode (SUBCOOL) by turning Humidi-MiZer test to SUBCOOL under the COOL TEST menu. (Y/N) _____

OBSERVE

   a. Reduction in suction pressure (5 to 7 psi expected) (Y/N) _____
   b. Discharge pressure unchanged (Y/N) _____
   c. Liquid temperature drops to 50 to 55°F range (Y/N) _____
   d. LDV solenoid energized (valve switches to reheat coil flow) (Y/N) _____
4. Switch unit to DEHUMID (REHEAT) by turning Humidi-MiZer test to REHEAT under the COOL TEST menu. (Y/N) _____

OBSERVE

   a. Suction pressure increases to normal cooling level (Y/N) _____
   b. Discharge pressure decreases 30 to 50 PSI (Y/N) _____
   c. Liquid temperature returns to normal cooling level (Y/N) _____
   d. LDV solenoid energized (valve switches to reheat coil flow) (Y/N) _____
   e. RDV solenoid energized, valve opens for flow (Y/N) _____
5. Switch unit to OFF by turning Humidi-MiZer test to OFF under the COOL TEST menu. Compressor and outdoor fan stop, RDV or LDV solenoids de-energized. (Y/N) _____

CUT ALONG DOTTED LINE

CUT ALONG DOTTED LINE

V. TEMPORARY FURNACE OPERATION DURING CONSTRUCTION

The furnace may be operated during the finishing stage of construction. To ensure proper operation follow checklist below:

1. Prior to the finishing stage of construction, ensure that return air and vent openings are covered to minimize penetration of dust and construction debris into the unit. (Y/N) _____
2. Interior drywall installation shall be completed and covered with paint or primer prior to unit operation. (Y/N) _____
3. Premises shall be substantially free of debris and dust. (Y/N) _____
4. Ensure all return and vent coverings have been removed. (Y/N) _____
5. Verify the return ducts and supply ducts are connected, are free from obstructions, are clean, and are properly sealed. (Y/N) _____
6. Ensure proper vent installation per installation instructions. (Y/N) _____
7. Ensure gas piping has been connection per installation instructions. (Y/N) _____
8. Verify that the gas piping is free of leaks. (Y/N) _____
9. Furnace to be set to operate under appropriate control to ensure proper operation. (Y/N) _____
10. Minimum MERV 11 air filters to be installed during the finishing stages of construction. (Y/N) _____
11. Set furnace input rate and temperature rise per rating plate marking. (Y/N) _____
12. Ensure means for providing combustion air in accordance with the manufacturer's shipped installation instructions. (Y/N) _____
13. Return air temperature to be maintained between 55°F (13°C) and 80°F (27°C). (Y/N) _____
14. Furnace shall be set up to operate in accordance with installation instructions and shall be verified for operating conditions including ignition, input rate, temperature rise, and venting. (Y/N) _____
15. Install new filters as per installation instructions prior to final occupancy. (Y/N) _____

CUT ALONG DOTTED LINE

CUT ALONG DOTTED LINE

© 2026 Carrier

Manufacturer reserves the right to discontinue, or change at any time, specifications or designs without notice and without incurring obligations.