WeatherMaker® 50FE 08-12 Single Package Rooftop Cooling Only with Puron® Advance (R-454B) Refrigerant

Installation Instructions

CONTENTS

Page

SAFETY CONSIDERATIONS 1
MODEL NUMBER NOMENCLATURE AND DIMENSIONS 2
Rated Indoor Airflow 2
INSTALLATION 7
Jobsite Survey 7
Step 1 — Plan for Unit Location 7
- ROOF MOUNT

Step 2 — Plan for Sequence of Unit Installation . . . 7
- CURB-MOUNTED INSTALLATION
- PAD-MOUNTED INSTALLATION
- FRAME-MOUNTED INSTALLATION

Step 3 — Inspect Unit 7
Step 4 — Provide Unit Support 7
- ROOF CURB MOUNT
- SLAB MOUNT (HORIZONTAL UNITS ONLY)
- ALTERNATE UNIT SUPPORT (IN LIEU OF CURB OR SLAB MOUNT)

Step 5 — Field Fabricate Ductwork 9
- FOR UNITS WITH ACCESSORY ELECTRIC HEATERS

Step 6 — Rig and Place Unit 9
- POSITIONING ON CURB

Step 7 — Convert to Horizontal and Connect Ductwork (when required) 10
Step 8 — Install Outside Air Hood 11
- ECONOMIZER HOOD PACKAGE REMOVAL (FACTORY OPTION)
- ECONOMIZER HOOD SETUP

Step 9 — Install External Condensate Trap and Line 12
Step 10 — Make Electrical Connections 12
- FIELD POWER SUPPLY
- FIELD POWER WIRING CONNECTIONS
- UNITS WITH FACTORY-INSTALLED NON-FUSED DISCONNECT
- UNITS WITHOUT FACTORY-INSTALLED NON-FUSED DISCONNECT
- FIELD WIRING COMPLIANCE
- CONVENIENCE OUTLETS
- ALL UNITS
- FACTORY-OPTION THRU-BASE CONNECTIONS
- UNITS WITHOUT THRU-BASE CONNECTIONS
- FIELD CONTROL WIRING
- THERMOSTAT
- UNIT WITHOUT THRU-BASE CONNECTION KIT
- HEAT ANTICIPATOR SETTINGS
- ELECTRIC HEATERS
- SINGLE POINT BOXES AND SUPPLEMENTARY FUSES
- SINGLE POINT BOXES WITHOUT FUSES
- LOW-VOLTAGE CONTROL CONNECTIONS
- HUMIDI-MIZER SYSTEM CONTROL CONNECTIONS
- TYPICAL UNIT WIRING DIAGRAMS

Humidi-MiZer Dehumidification System (Optional) 24
- NORMAL COOLING
- DEHUM/MECH COOLING (SUBCOOLING) MODE
- DEHUMIDIFICATION (HOT GAS REHEAT) MODE
- REHEAT CONTROL

Leak Dissipation System 26
- SEQUENCE OF OPERATION
- LEAK DISSIPATION SYSTEM SELF-TEST
- TROUBLESHOOTING

EconomizerONE (Factory Option) 29
- ECONOMIZER SETTINGS
- WIRING
- SETUP AND CONFIGURATION
- INSTALLING OPTIONAL HH57LW001 SINGLE OUTSIDE AIR ENTHALPY SENSOR
- CHECKOUT
- TROUBLESHOOTING

SystemVu™ Controller (Factory Option) 50
Smoke Detectors 50
Step 11 — Adjust Factory-Installed Options 51
- SMOKE DETECTORS
- ECONOMIZERONE OCCUPANCY SWITCH

Step 12 — Install Accessories 51
Step 13 — Fan Speed Set Up 51
- UNITS WITH ELECTROMECHANICAL CONTROLS
- UNITS WITH SYSTEMVU™ CONTROLS

FASTENER TORQUE VALUES 53
START-UP CHECKLIST CL-1

SAFETY CONSIDERATIONS

Installation and servicing of air-conditioning equipment can be hazardous due to system pressure and electrical components. Only trained and qualified service personnel should install, repair, or service air-conditioning equipment.

Untrained personnel can perform basic maintenance functions of cleaning coils and filters and replacing filters. All other operations should be performed by trained service personnel. When working on air-conditioning equipment, observe precautions in the literature, tags and labels attached to the unit, and other safety precautions that may apply.

Follow all safety codes, including ANSI (American National Standards Institute) Z223.1. Wear safety glasses and work gloves. Use quenching cloth for unbrazing operations. Have fire extinguisher available for all brazing operations.

It is important to recognize safety information. This is the safety-alert symbol ⚠. When you see this symbol on the unit and in instructions or manuals, be alert to the potential for personal injury.

Understand the signal words DANGER, WARNING, CAUTION, and NOTE. These words are used with the safety-alert symbol.

Manufacturer reserves the right to discontinue, or change at any time, specifications or designs without notice and without incurring obligations.

DANGER identifies the most serious hazards which **will** result in severe personal injury or death. WARNING signifies hazards which **could** result in personal injury or death. CAUTION is used to identify unsafe practices, which **may** result in minor personal injury or product and property damage. NOTE is used to highlight suggestions which **will** result in enhanced installation, reliability, or operation.

⚠ DANGER

ELECTRICAL SHOCK HAZARD

Failure to follow this warning will result in personal injury or death.

Before performing service or maintenance operations on unit, turn off main power switch to unit and install lock(s) and lockout tag(s). Ensure electrical service to rooftop unit agrees with voltage and amperage listed on the unit rating plate. Unit may have more than one power switch.

⚠ WARNING

UNIT OPERATION AND SAFETY HAZARD

Failure to follow this warning could cause personal injury, death and/or equipment damage.

R-454B is an A2L refrigerant. All service equipment or components must be A2L refrigerant rated. Do not use non-A2L rated equipment or components on R-454B refrigerant equipment

⚠ WARNING

PERSONAL INJURY AND ENVIRONMENTAL HAZARD

Failure to follow this warning could cause personal injury or death.

Relieve pressure and recover all refrigerant before system repair or final unit disposal.

Wear safety glasses and gloves when handling refrigerants. Keep torches and other ignition sources away from refrigerants and oils.

⚠ WARNING

Use caution when servicing compressor terminal pins. System or compressor abnormalities can dislodge pins allowing oil and refrigerant to vent under pressure.

⚠ AVERTISSEMENT

Soyez prudent lors de l'entretien des bornes du compresseur. Les anomalies du système ou du compresseur peuvent déloger les bornes, permettant à l'huile et au réfrigérant de s'évacuer sous pression.

⚠ CAUTION

PERSONAL INJURY HAZARD

Failure to follow this caution may result in personal injury.

Sheet metal parts may have sharp edges or burrs. Use care and wear appropriate protective clothing, safety glasses and gloves when handling parts and servicing air conditioning equipment.

MODEL NUMBER NOMENCLATURE AND DIMENSIONS

See Fig. 1 for 50FE model number nomenclature. See Fig. 2 for unit dimensional drawings and service clearance dimensions.

Rated Indoor Airflow

Table 1 lists the rated indoor airflow used for the AHRI efficiency rating for the units covered in this document.

Table 1 — Rated Indoor Airflow

MODEL NUMBER	RATED INDOOR AIRFLOW (cfm)
50FE08**	2650
50FE09**	3400
50FE12**	3500

Position:	1	2	3	4	5	6	7	8	9	10	11	12	13	14	15	16	17	18
Example:	5	0	F	E	-	M	0	8	A	2	A	5	-	8	A	0	A	0

Unit Type
50 – Cooling with Electric Heat

Model Series - WeatherMaker®
FE = Entry Tier Puron® Advance

Heat Size
- = No Heat

Refrig. Systems Options
M = Two-Stage Cooling/One-Circuit Models
N = Two-Stage Cooling/One-Circuit Models with Humidi-MiZer® System[a]

Cooling Tons
08 = 7.5 tons
09 = 8.5 tons
12 = 10.0 tons

Sensor Options
A = None
B = Return Air Smoke Detector (RA)
C = Supply Air Smoke Detector (SA)
D = RA + SA Smoke Detector
J = Condensate Overflow Switch (COFS)
K = Condensate Overflow Switch + RA Smoke Detectors
L = Condensate Overflow Switch + RA and SA Smoke Detectors
M = Condensate Overflow Switch + SA Smoke Detector

Fan Options
2 = Standard/Medium Static – EcoBlue™ Vane Axial Fan
3 = High Static – EcoBlue Vane Axial Fan
5 = Standard/Medium Static – EcoBlue Vane Axial Fan and Filter Status Switch
6 = High Static – EcoBlue Vane Axial Fan and Filter Status Switch

RTPF Coil Options (Outdoor – Indoor –Hail Guard)
A = Al/Cu – Al/Cu
B = Precoat Al/Cu – Al/Cu
C = E-coat Al/Cu – Al/Cu
D = E-coat Al/Cu – E-coat Al/Cu
M = Al/Cu – Al/Cu — Louvered Hail Guard
N = Precoat Al/Cu – Al/Cu — Louvered Hail Guard
P = E-coat Al/Cu – Al/Cu — Louvered Hail Guard
Q = E-coat Al/Cu – E-coat Al/Cu — Louvered Hail Guard
R = Cu/Cu – Al/Cu — Louvered Hail Guard
S = Cu/Cu – Cu/Cu — Louvered Hail Guard

Voltage
1 = 575-3-60
5 = 208/230-3-60
6 = 460-3-60

Packaging
0 = Standard

Electrical Options
A = None
C = Non-Fused Disconnect (NFDC)
D = Thru-The-Base Connections (TTB)
F = NFDC + TTB
N = Phase Monitor Protection (PMR)
Q = PMR + NFDC
R = PMR + TTB
T = PMR + NFDC + TTB
1 = HSCCR[b] (High Short Circuit Current Rating)
2 = HSCCR[b] + TTB

Service Options
0 = None
1 = Unpowered Convenience Outlet (NPCO)
2 = Powered Convenience Outlet (PCO)
3 = Hinged Panels (HP)
4 = Hinged Panels + NPCO
5 = Hinged Panels + PCO
6 = 4-Inch MERV-13 Filters (M13)
7 = NPCO + MERV-13 Filters
8 = PCO + MERV-13 Filters
9 = Hinged Panels + MERV-13 Filters
A = HP + NPCO + MERV-13 Filters
B = HP + PCO + MERV-13 Filters

Intake / Exhaust Options
A = None
B = Standard Leak Economizer with Barometric Relief
F = Standard Leak Enthalpy Economizer with Barometric Relief
L = ULL (Ultra Low Leak) Temperature Economizer with Barometric Relief and CO_2 Sensor
M = ULL Enthalpy Economizer with Barometric Relief and CO_2 Sensor
U = ULL Temperature Economizer with Barometric Relief
W = ULL Enthalpy Economizer with Barometric Relief

Base Unit Controls
0 = Standard Electro-mechanical Controls (can be used with field installed economizers and dampers)
3 = SystemVu™ Controller
8 = Electro-mechanical Controls with POL224 (includes FDD[c])

Design Revision
- = Factory Design Revision

NOTE (S):
[a] Units with Humidi-MiZer System include Low Ambient controller.
[b] Not available on the following models/options: 575V, Phase Loss Monitor, Non-Fused Disconnect, or Powered Convience Outlet.
[c] Fault Detection and Diagnostic

Fig. 1 — 50FE 08-12 Model Number Nomenclature (Example)

NOTES:

1. DIMENSIONS ARE IN INCHES, DIMENSIONS IN [ ] ARE IN MILLIMETERS.
2. CENTER OF GRAVITY
3. DIRECTION OF AIR FLOW
4. ALL VIEW DRAWN USING 3RD ANGLE

UNIT	OUTDOOR COIL TYPE	J	K	H
50FE-M08	RTPF	41 1/4 [1048]	33 3/4 [857]	15 7/8 [403]
50FE-M09	RTPF	49 3/8 [1253]	36 3/8 [925]	15 7/8 [403]
50FE-M12	RTPF	49 3/8 [1253]	36 3/8 [925]	15 7/8 [403]
RTPF - ROUND TUBE, PLATE FIN (COPPER/ALUM)				

Carrier

THIS DOCUMENT IS THE PROPERTY OF CARRIER CORPORATION AND IS DELIVERED UPON THE EXPRESS CONDITION THAT THE CONTENTS WILL NOT BE DISCLOSED OR USED WITHOUT CARRIER CORPORATION'S WRITTEN CONSENT.

SUBMISSION OF THESE DRAWINGS OR DOCUMENTS DOES NOT CONSTITUTE PART PERFORMANCE OR ACCEPTANCE OF CONTRACT.

CONNECTION SIZES	
A	1 3/8" [35] DIA FIELD POWER SUPPLY HOLE
B	2 1/2" [64] DIA POWER SUPPLY KNOCKOUT
C	1 3/4" [51] DIA GAUGE ACCESS PLUG
D	7/8" [22] DIA FIELD CONTROL WIRING HOLE
E	3/4"-14 NPT CONDENSATE DRAIN
G	2 " [51] DIA POWER SUPPLY KNOCK-OUT

THRU-THE-BASE CHART (FIELD INST)

THESE HOLES REQUIRED FOR USE WITH ACCY KITS: CRBTMPWR002A01

	THREADED CONDUIT SIZE	WIRE USE	REQ'D HOLE SIZES (MAX.)
W	1/2"	ACC.	7/8" [22.2]
X	1/2"	24V	7/8" [22.2]
Y	1 1/4" (002)	POWER	1 3/4" [44.4]

THRU-THE-BASE CHART (FIOP)

FOR "THRU-THE-BASEPAN" FACTORY OPTION, FITTINGS FOR ONLY X & Y ARE PROVIDED: (1) 1/2" & (1) 1 1/4" ELECTRICAL FITTINGS.

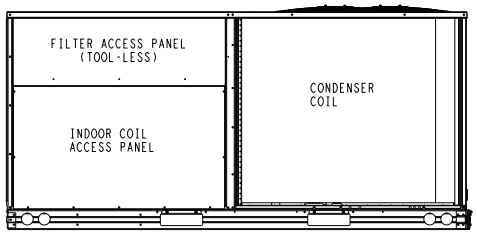

BACK

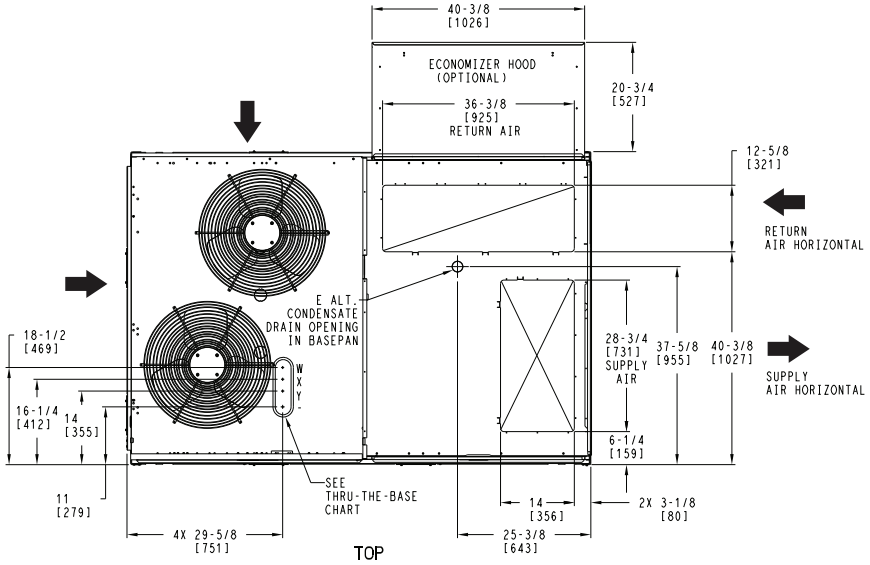

TOP

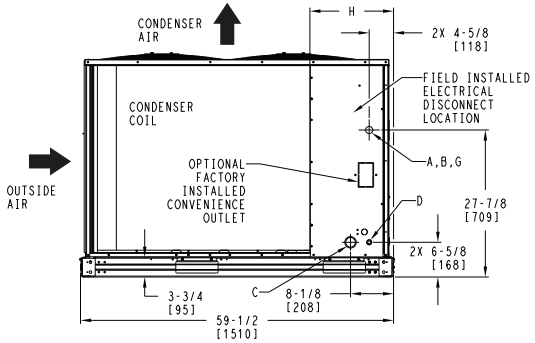

LEFT

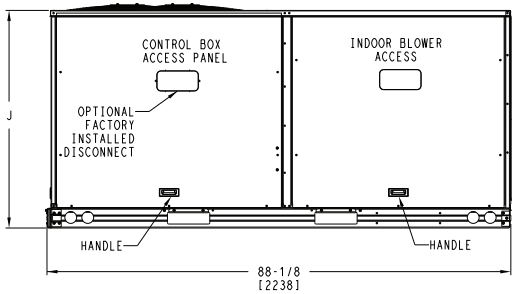

FRONT

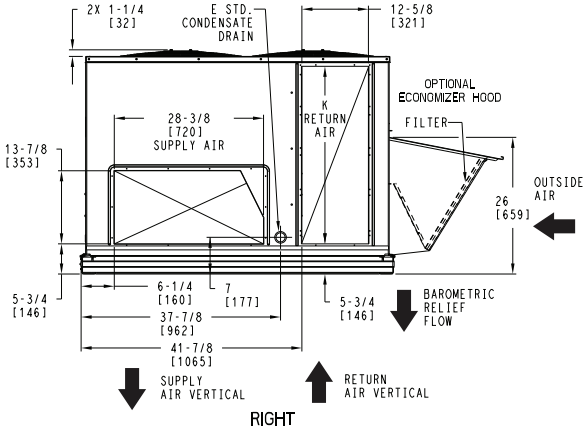

RIGHT

ITC CLASSIFICATION	SHEET	DATE	SUPERCEDES			REV
U.S. ECCN:NSR	1 OF 3	8/8/23	-	50FE 08-12 SINGLE ZONE ELECTRICAL COOLING WITH ELECTRIC HEAT	48TM009323	-

Fig. 2 — 50FE 08-12 Unit Dimensional Drawing

UNIT	OUTDOOR COIL TYPE	STD. UNIT WEIGHT ***		CORNER WEIGHT (A)		CORNER WEIGHT (B)		CORNER WEIGHT (C)		CORNER WEIGHT (D)		C.G.		
		LBS.	KG.	LBS.	KG.	LBS.	KG.	LBS.	KG.	LBS.	KG.	X	Y	Z
50FE-M08	RTPF	743	337	170	77	142	64	196	89	235	107	40 [1016]	34 1/2 [876]	20 [508]
50FE-M09	RTPF	805	365	201	91	157	71	196	89	251	114	38 5/8 [981]	33 [838]	19 1/8 [486]
50FE-M12	RTPF	815	370	204	92	159	72	198	90	254	115	38 5/8 [981]	33 [838]	19 1/8 [486]
RTPF - ROUND TUBE, PLATE FIN (COPPER/ALUM)														

*** STANDARD UNIT WEIGHT IS WITHOUT ELECTRIC HEAT AND WITHOUT PACKAGING.
FOR OTHER OPTIONS AND ACCESSORIES, REFER TO THE PRODUCT DATA CATALOG.

Carrier
THIS DOCUMENT IS THE PROPERTY OF CARRIER CORPORATION AND IS DELIVERED UPON THE EXPRESS CONDITION THAT THE CONTENTS WILL NOT BE DISCLOSED OR USED WITHOUT CARRIER CORPORATION'S WRITTEN CONSENT.
SUBMISSION OF THESE DRAWINGS OR DOCUMENTS DOES NOT CONSTITUTE PART PERFORMANCE OR ACCEPTANCE OF CONTRACT.

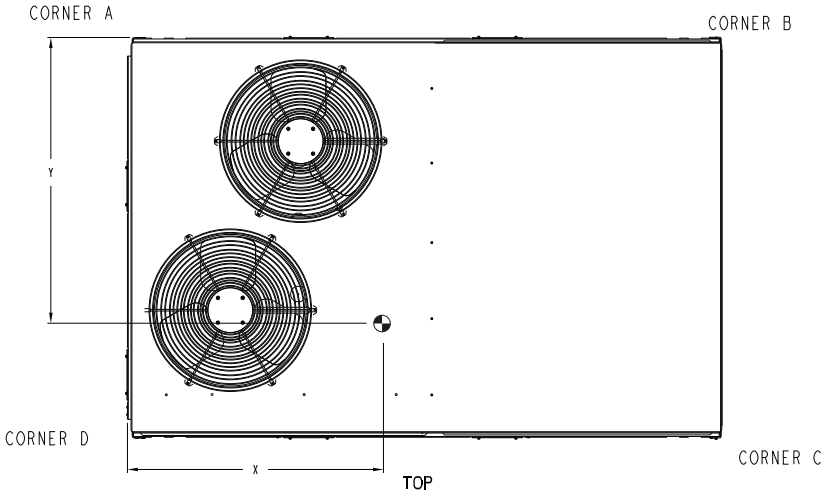

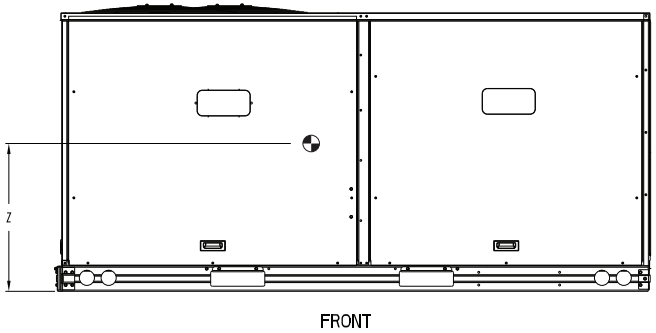

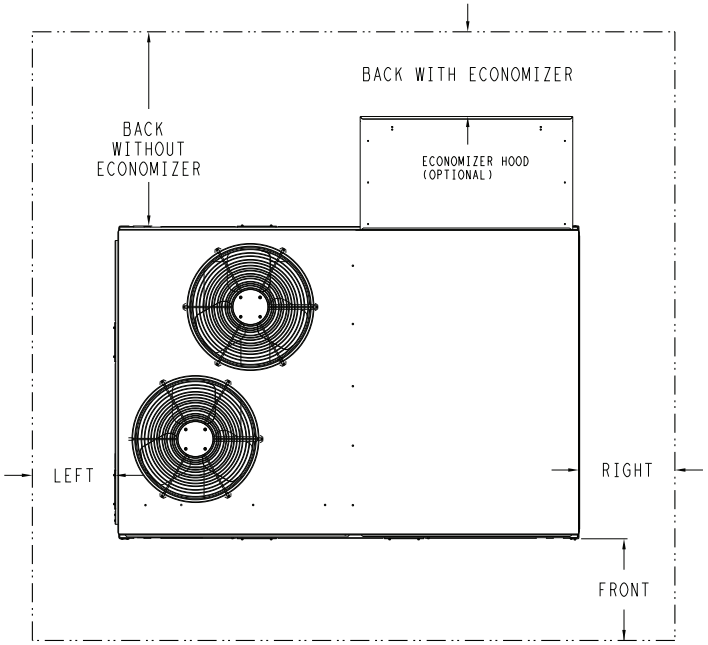

NOTE:

1. FOR ALL MINIMUM CLEARANCES LOCAL CODES OR JURISDICTIONS MAY PREVAIL.

CLEARANCE			
	SERVICE WITH:	SERVICE WITH:	OPERATING
SURFACE	CONDUCTIVE BARRIER	NONCONDUCTIVE BARRIER	CLEARANCE
FRONT	48 [1219mm]	36 [914mm]	18 [457mm]
LEFT	48 [1219mm]	42 [1067mm]	18 [457mm]
BACK W/O ECON	48 [1219mm]	42 [1067mm]	18 [457mm]
BACK W/ECON	36 [914mm]	36 [914mm]	18 [457mm]
RIGHT	36 [914mm]	36 [914mm]	18 [457mm]
TOP	72 [1829mm]	72 [1829mm]	72 [1829mm]

ITC CLASSIFICATION	SHEET	DATE	SUPERCEDES			REV
U.S. ECCN:NSR	2 OF 3	8/8/23	-	50FE 08-12 SINGLE ZONE ELECTRICAL COOLING WITH ELECTRIC HEAT	48TM009323	-

Fig. 2 — 50FE 08-12 Unit Dimensional Drawing (cont)

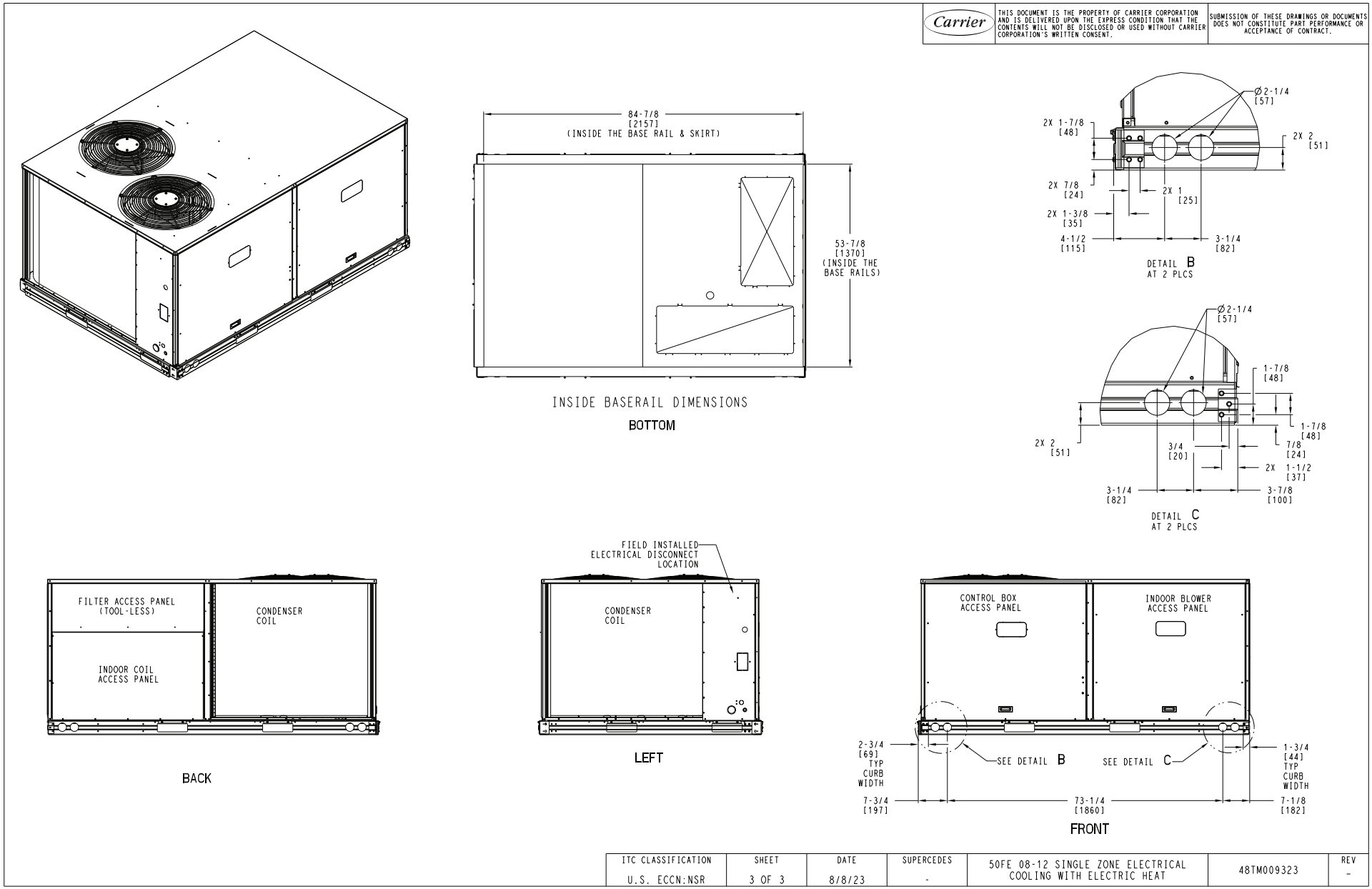

Fig. 2 — 50FE 08-12 Unit Dimensional Drawing (cont)

INSTALLATION

Jobsite Survey

Complete the following checks before installation.

1. Consult local building codes and the NEC (National Electrical Code) ANSI/NFPA 70 for special installation requirements.
2. Determine unit location (from project plans) or select unit location.
3. Check for possible overhead obstructions which may interfere with unit lifting or rigging.

Step 1 — Plan for Unit Location

Select a location for the unit and its support system (curb or other) that provides for minimum clearances required for safety (including clearance to combustible surfaces), unit performance and service access below, around and above unit as specified in unit drawings. Refer to Fig. 2 on page 5.

NOTE: Consider also the effect of adjacent units.

Unit may be installed directly on wood flooring or on Class A, B, or C roof-covering material when roof curb is used.

Do not install unit in an indoor location. Do not locate air inlets near exhaust vents or other sources of contaminated air.

Although unit is weatherproof, avoid locations that permit water from higher level runoff and overhangs to fall onto unit.

Select a unit mounting system that provides adequate height to allow installation of condensate trap per requirements. Refer to Install External Condensate Trap and Line on page 12 for required trap dimensions.

ROOF MOUNT

Check building codes for weight distribution requirements. Unit operating weight is shown in Table 2.

Step 2 — Plan for Sequence of Unit Installation

The support method used for this unit will dictate different sequences for the steps of unit installation. For example, on curb-mounted units, some accessories must be installed on the unit before the unit is placed on the curb. Review the following for recommended sequences for installation steps.

CURB-MOUNTED INSTALLATION

1. Install curb
2. Install field-fabricated ductwork inside curb
3. Install accessory thru-base service connection package (affects curb and unit) (refer to accessory installation instructions for details)
4. Prepare bottom condensate drain connection to suit planned condensate line routing (refer to Install External Condensate Trap and Line on page 12 for details)
5. Rig and place unit
6. Install outdoor air hood
7. Install condensate line trap and piping
8. Make electrical connections
9. Install other accessories

PAD-MOUNTED INSTALLATION

1. Prepare pad and unit supports
2. Check and tighten the bottom condensate drain connection plug
3. Rig and place unit
4. Convert unit to side duct connection arrangement
5. Install field-fabricated ductwork at unit duct openings
6. Install outdoor air hood
7. Install condensate line trap and piping
8. Make electrical connections
9. Install other accessories

FRAME-MOUNTED INSTALLATION

Frame-mounted applications generally follow the sequence for a curb installation. Adapt as required to suit specific installation plan.

Step 3 — Inspect Unit

Inspect unit for transportation damage. File any claim with transportation agency. Confirm before installation of unit that voltage, amperage and circuit protection requirements listed on unit data plate agree with power supply provided.

Step 4 — Provide Unit Support

ROOF CURB MOUNT

Accessory roof curb details and dimensions are shown in Fig. 3. Assemble and install accessory roof curb in accordance with instructions shipped with the curb. Curb should be level. This is necessary for unit drain to function properly. Unit leveling tolerances are shown in Fig. 4. Refer to Accessory Roof Curb Installation Instructions for additional information as required.

NOTE: The gasketing of the unit to the roof curb is critical for a watertight seal. Install gasket supplied with the roof curb as shown in Fig. 3. Improperly applied gasket can also result in air leaks and poor unit performance.

Install insulation, cant strips, roofing felt, and counter flashing as shown. Ductwork must be attached to curb and not to the unit.

> IMPORTANT: If the unit has the factory-installed Thru-the-base option, make sure to complete installation of the option before placing the unit on the roof curb. See the following section: **Factory-Option Thru-Base Connections** see page 16.

The accessory thru-the-base power connection package must be installed before the unit is set on the roof curb. If electric and control wiring is to be routed through the basepan, attach the accessory thru-the-base service connections to the basepan in accordance with the accessory installation instructions.

Table 2 — Operating Weights

50FE	UNITS — lb (kg)					
	08		09		12	
	lb	kg	lb	kg	lb	kg
Base Unit	743	337	805	365	815	370
Economizer	75	34	75	34	75	34
Humidi-MiZer® System[a]	80	36	80	36	80	36
Powered Outlet[b]	36	16	36	16	36	16
Curb						
14 in. (356 mm)	143	65	143	65	143	65
24 in. (610 mm)	245	111	245	111	245	111

NOTE(S):

a. Humidi-MiZer is not available on 50FE-M models.
b. Combined weight of Convenience Outlet and Transformer.

ROOF CURB ACCESSORY #	A
CRRFCURB003A01	14" [356]
CRRFCURB004A01	24" [610]

NOTES:
1. ROOFCURB ACCESSORY IS SHIPPED DISASSEMBLED.
2. INSULATED PANELS: 25.4 [1"] THK. POLYURETHANE FOAM, 44.5 [1-3/4] # DENSITY.
3. DIMENSIONS IN [ ] ARE IN MILLIMETERS.
4. ROOFCURB: 18 GAGE STEEL.
5. ATTACH DUCTWORK TO CURB. (FLANGES OF DUCT REST ON CURB).
6. SERVICE CLEARANCE 4 FEET ON EACH SIDE.
7. DIRECTION OF AIR FLOW.
8. CONNECTOR PACKAGE CRBTMPWR002A01 IS FOR THRU-THE-CURB GAS TYPE PACKAGE CRBTMPWR004A01 IS FOR THRU-THE-BOTTOM TYPE GAS CONNECTIONS.

CONNECTOR PKG. ACC.	GAS CONNECTION TYPE	GAS FITTING	POWER WIRING FITTING	CONTROL WIRING FITTING	ACCESSORY CONVENIENCE OUTLET WIRING CONNECTOR
CRBTMPWR002A01	THRU THE CURB	3/4" [19] NPT	1 1/4" [31.7] NPT	1/2" [12.7] NPT	1/2" [12.7] NPT
CRBTMPWR004A01	THRU THE BOTTOM				

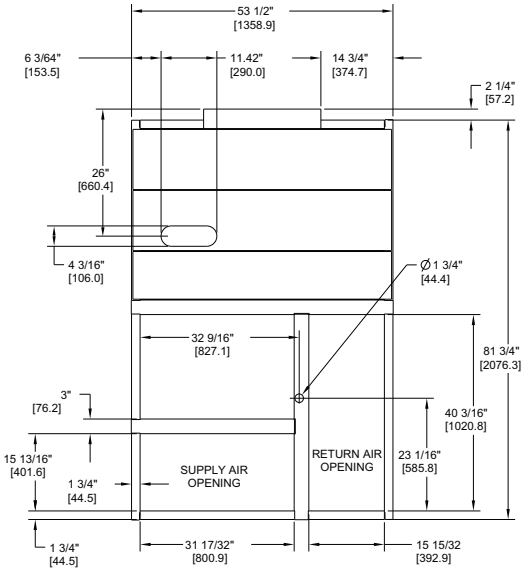

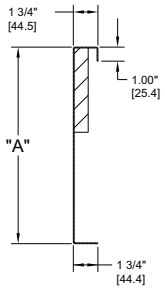

SECTION THRU SIDE

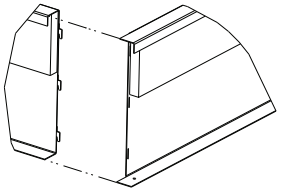

VIEW "B"
CORNER DETAIL

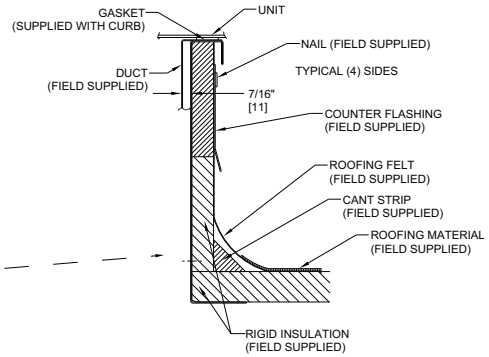

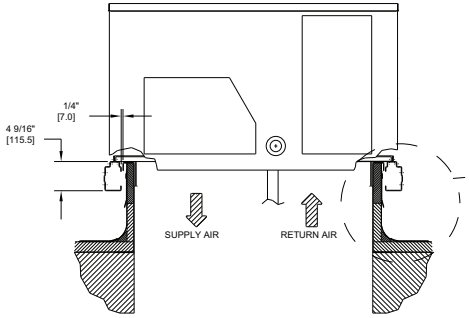

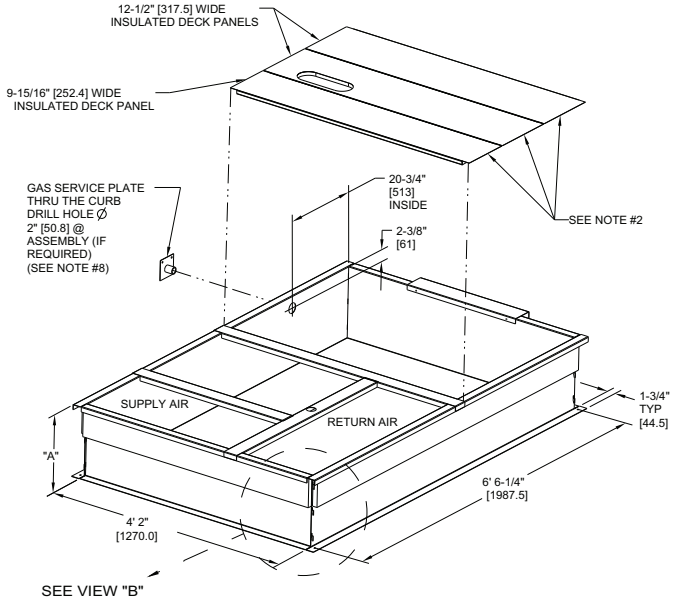

CERTIFIED DRAWING

REV	REVISION RECORD	DATE	BY	CHK'D	APP'D	ECN NO.
C	6' 61/4" WAS 6' 7 1/6", 4'2' WAS 4' 2 13/16"; 18 GA WAS 16 GA.; 15 13/16" WAS 15 15/16"; NAIL FIELD SUPPLIED WAS WITH CURB	4/22/13	MMC	-	-	1067898

DRAWING RELEASE LEVEL: PRODUCTION			
THIRD ANGLE PROJECTION	UNLESS OTHERWISE SPECIFIED DIMENSIONS ARE IN INCHES TOLERANCES ON: 1 DEC ± - 2 DEC ± - 3 DEC ± - ANG ± -	THIS DOCUMENT AND THE INFORMATION CONTAINED THEREIN IS PROPRIETARY TO CARRIER CORPORATION AND SHALL NOT BE USED OR DISCLOSED TO OTHERS, IN WHOLE OR IN PART, WITHOUT THE WRITTEN AUTHORIZATION OF CARRIER CORPORATION.	
MATERIAL - - -	AUTHORIZATION NUMBER 1029120	TITLE CURB ASY, ROOF	
ENGINEERING REQUIREMENTS T-005, Y-002	ENGINEERING - - / MANUFACTURING - -	SIZE D	DRAWING NUMBER 50HJ405012 SHEET 5 OF 5 / REV C
WEIGHT: -	DRAFTER MMC 12/16/09 / CHECKER - -		
SURFACE FINISH - / MFG/PURCH PURCH	MODEL (INTERNAL USE ONLY)	NEXT DRAWING - / SCALE N/A	DISTRIBUTION -

Fig. 3 — Roof Curb Details

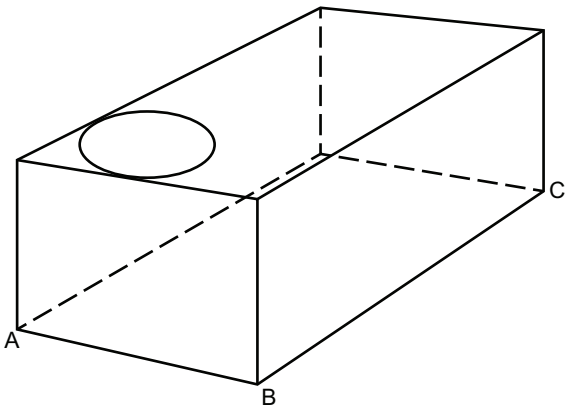

MAXIMUM ALLOWABLE DIFFERENCE in. (mm)

A-B	B-C	A-C
0.5 (13)	1.0 (25)	1.0 (25)

Fig. 4 — Unit Leveling Tolerances

SLAB MOUNT (HORIZONTAL UNITS ONLY)

Provide a level concrete slab that extends a minimum of 6 in. (150 mm) beyond unit cabinet. Install a gravel apron in front of condenser coil air inlet to prevent grass and foliage from obstructing airflow.

NOTE: Horizontal units may be installed on a roof curb if required.

ALTERNATE UNIT SUPPORT (IN LIEU OF CURB OR SLAB MOUNT)

A non-combustible sleeper rail can be used in the unit curb support area. If sleeper rails cannot be used, support the long sides of the unit with a minimum of 3 equally spaced 4 in. x 4 in. (102 mm x 102 mm) pads on each side.

Step 5 — Field Fabricate Ductwork

Cabinet return-air static pressure (a negative condition) shall not exceed 0.35 in. wg (87 Pa) with economizer or 0.45 in. wg (112 Pa) without economizer.

For vertical ducted applications, secure all ducts to roof curb and building structure. *Do not connect ductwork to unit.*

Fabricate supply ductwork so that the cross sectional dimensions are equal to or greater than the unit supply duct opening dimensions for the first 18 in. (458 mm) of duct length from the unit basepan.

Insulate and weatherproof all external ductwork, joints, and roof openings with counter flashing and mastic in accordance with applicable codes.

Ducts passing through unconditioned spaces must be insulated and covered with a vapor barrier.

If a plenum return is used on a vertical unit, the return should be ducted through the roof deck to comply with applicable fire codes.

⚠ CAUTION

PROPERTY DAMAGE HAZARD

Failure to follow this caution may result in damage to roofing materials.

Membrane roofs can be cut by sharp sheet metal edges. Be careful when placing any sheet metal parts on such roof.

FOR UNITS WITH ACCESSORY ELECTRIC HEATERS

All installations require a minimum clearance to combustible surfaces of 1 in. (25 mm) from duct for first 12 in. (305 mm) away from unit.

Outlet grilles must not lie directly below unit discharge.

⚠ WARNING

PERSONAL INJURY HAZARD

Failure to follow this warning could cause personal injury.

For vertical supply and return units, tools or parts could drop into ductwork and cause an injury. Install a 90 degree turn in the return ductwork between the unit and the conditioned space. If a 90 degree elbow cannot be installed, then a grille of sufficient strength and density should be installed to prevent objects from falling into the conditioned space. Due to electric heater, supply duct will require 90 degree elbow.

Step 6 — Rig and Place Unit

Keep unit upright and do not drop. Spreader bars are required. Rollers may be used to move unit across a roof. Level by using unit frame as a reference. Refer to Table 2 on page 7 and see Fig. 5 on page 10 for additional information.

Lifting holes are provided in base rails as shown in Fig. 5. Refer to rigging instructions on unit.

Rigging materials under unit (cardboard or wood to prevent base pan damage) must be removed PRIOR to placing the unit on the roof curb.

When using the standard side drain connection, ensure the red plug in the alternate bottom connection is tight. Do this before setting the unit in place. The red drain pan can be tightened with a 1/2 in. square socket drive extension. For further details see Install External Condensate Trap and Line on page 12.

Before setting the unit onto the curb, recheck gasketing on curb.

⚠ CAUTION

UNIT DAMAGE HAZARD

Failure to follow this caution may result in equipment damage.

All panels must be in place when rigging. Unit is not designed for handling by fork truck when packaging is removed.

If using top crate as spreader bar, once unit is set, carefully lower wooden crate off building roof top to ground. Ensure that no people or obstructions are below prior to lowering the crate.

POSITIONING ON CURB

Position unit on roof curb so that the following clearances are maintained: 1/4 in. (6.4 mm) clearance between the roof curb and the base rail inside the front and back, 0.0 in. clearance between the roof curb and the base rail inside on the duct end of the unit. This will result in the distance between the roof curb and the base rail inside on the condenser end of the unit being approximately 1/4 in. (6.4 mm).

Although unit is weatherproof, guard against water from higher level runoff and overhangs.

After unit is in position, remove rigging skids and shipping materials.

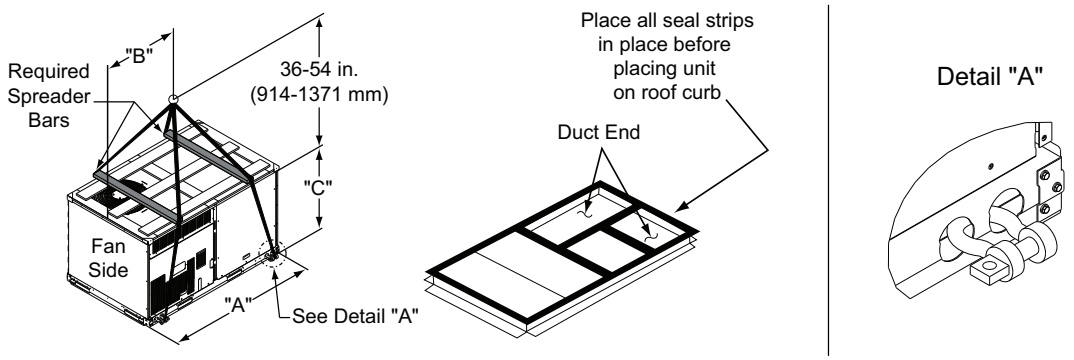

NOTE(S):
1. SPREADER BARS ARE REQUIRED. Top damage will occur if spreader bars are not used.
2. Hook rigging shackles through holes in base rail, as shown in Detail A. Holes in base rails are centered around the unit center of gravity. Use wooden top to prevent rigging straps from damaging unit.

UNIT	MAXIMUM WEIGHT		DIMENSIONS					
			A		B		C	
	lb	kg	in.	mm	in.	mm	in.	mm
50FE-*08	1231	558	88.0	2235	40.0	1015	41.5	1055
50FE-*09	1352	613	88.0	2235	38.5	980	49.5	1255
50FE-*12	1377	625	88.0	2235	38.5	980	49.5	1255

Fig. 5 — Rigging Details

Step 7 — Convert to Horizontal and Connect Ductwork (when required)

Unit is shipped in the vertical duct configuration. Unit without factory-installed economizer or return-air smoke detector option may be field-converted to horizontal ducted configuration. To convert to horizontal configuration, remove screws from side duct opening covers (see Fig. 6) and remove covers. Use the screws to install the covers on vertical duct openings with the insulation-side down. The panels must be inserted into the notches on the basepan to properly seal. The notches are covered by the tape used to secure the insulation to the basepan and are not easily seen. See Fig. 7 for position of the notches in the basepan. Seals around duct openings must be tight. Secure with screws as shown in Fig. 8. Cover seams with foil duct tape.

Field-supplied flanges should be attached to horizontal duct openings and all ductwork should be secured to the flanges. Insulate and weatherproof all external ductwork, joints, and roof or building openings with counter flashing and mastic in accordance with applicable codes.

Do not cover or obscure visibility to the unit's informative data plate when insulating horizontal ductwork.

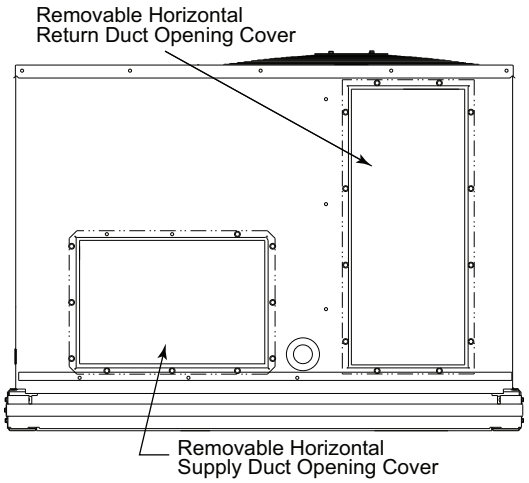

Fig. 6 — Horizontal Conversion Panels

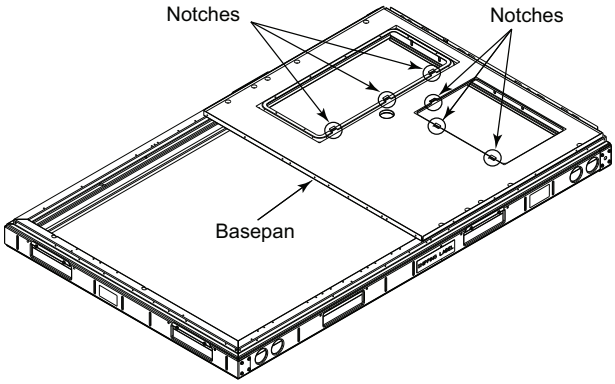

Fig. 7 — Location of Notches

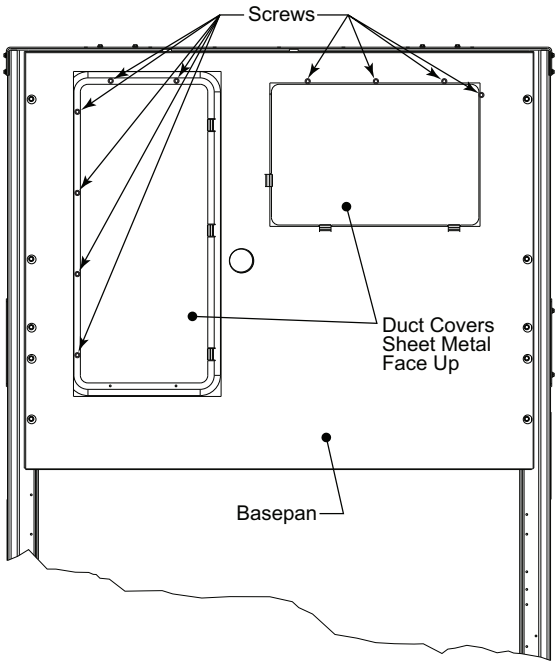

Fig. 8 — Horizontal Duct Panels In Place

Step 8 — Install Outside Air Hood

ECONOMIZER HOOD PACKAGE REMOVAL (FACTORY OPTION)

1. The hood is shipped in knock-down form and must be field assembled. The indoor coil access panel is used as the hood top while the hood sides, divider and filter are packaged together, attached to a metal support tray using plastic stretch wrap, and shipped in the return air compartment behind the indoor coil access panel. The hood assembly's metal tray is attached to the basepan and also attached to the damper using two plastic tie-wraps.
2. To gain access to the hood, remove the filter access panel. (See Fig. 9.)

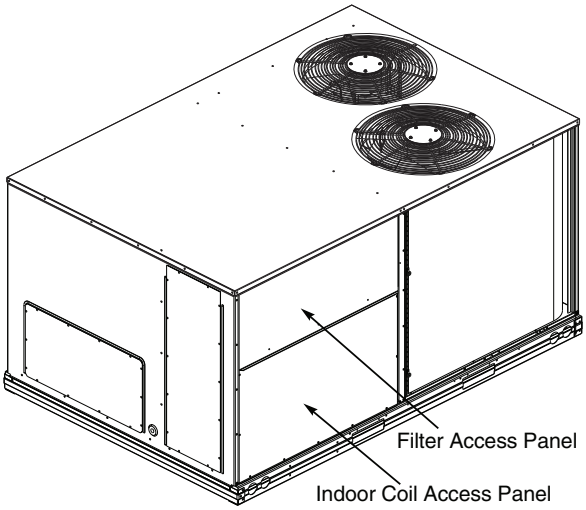

Fig. 9 — Typical Access Panel Locations

3. Locate the (2) screws holding the metal tray to the basepan and remove. Locate and cut the (2) plastic tie-wraps securing the assembly to the damper. (See Fig. 10.) Be careful to not damage any wiring or cut tie-wraps securing any wiring.

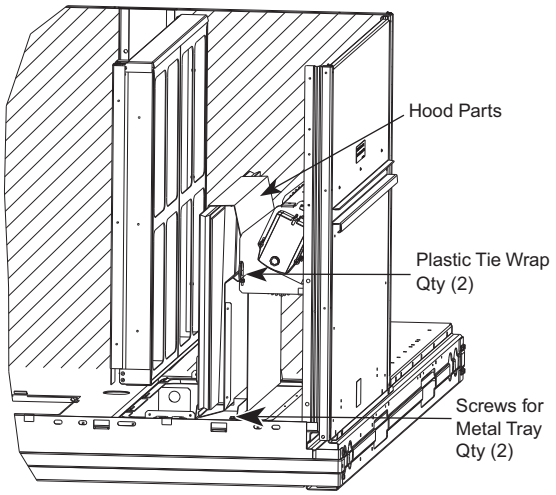

Fig. 10 — Economizer Hood Parts Location

4. Carefully lift the hood assembly (with metal tray) through the filter access opening and assemble per the steps outlined in Economizer Hood Setup in the following section.

ECONOMIZER HOOD SETUP

NOTE: If the power exhaust accessory is to be installed on the unit, the hood shipped with the unit will not be used and must be discarded. Save the aluminum filter for use in the power exhaust hood assembly.

1. The indoor coil access panel will be used as the top of the hood. Remove the screws along the sides and bottom of the indoor coil access panel. See Fig. 11.

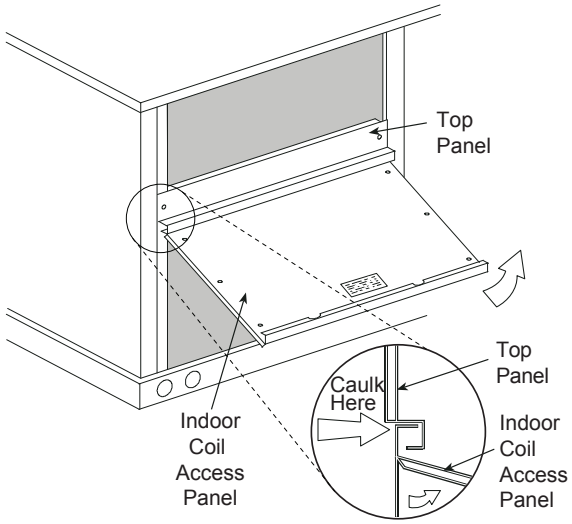

Fig. 11 — Indoor Coil Access Panel Relocation

2. Swing out indoor coil access panel and insert the hood sides under the panel (hood top). Use the screws provided to attach the hood sides to the hood top. Use screws provided to attach the hood sides to the unit. See Fig. 12.

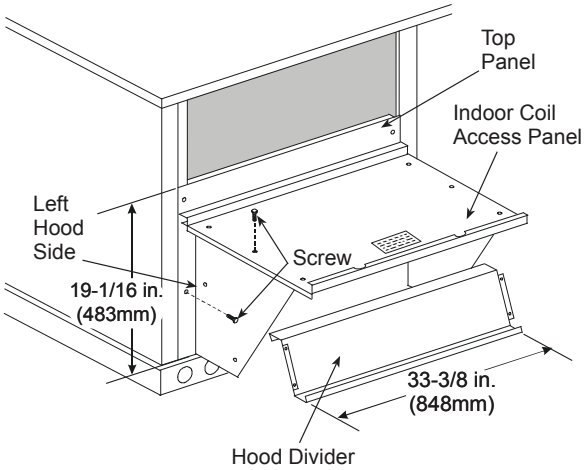

Fig. 12 — Economizer Hood Construction

3. Remove the shipping tape holding the economizer barometric relief damper in place (economizer only).
4. Insert the hood divider between the hood sides. See Fig. 12 and 13. Secure hood divider with 2 screws on each hood side. The hood divider is also used as the bottom filter rack for the aluminum filter.
5. Open the filter clips which are located underneath the hood top. Insert the aluminum filter into the bottom filter rack (hood divider). Push the filter into position past the open filter clips. Close the filter clips to lock the filter into place. See Fig. 13.
6. Caulk the ends of the joint between the unit top panel and the hood top.
7. Replace the filter access panel.

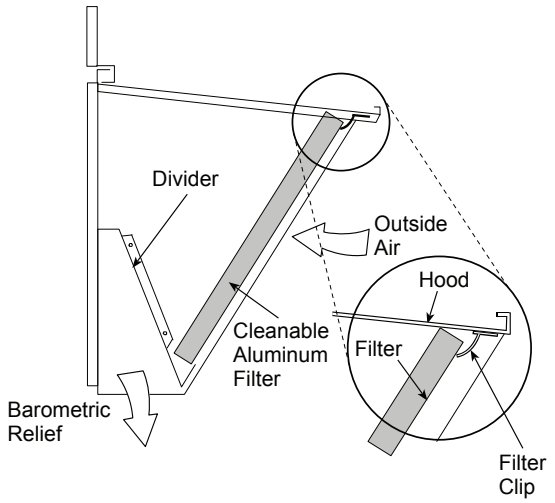

Fig. 13 — Economizer Filter Installation

Step 9 — Install External Condensate Trap and Line

The unit has one 3/4 in. condensate drain connection on the end of the condensate pan and an alternate connection on the bottom. See Fig. 14. Unit airflow configuration does not determine which drain connection to use. Either drain connection can be used with vertical or horizontal applications.

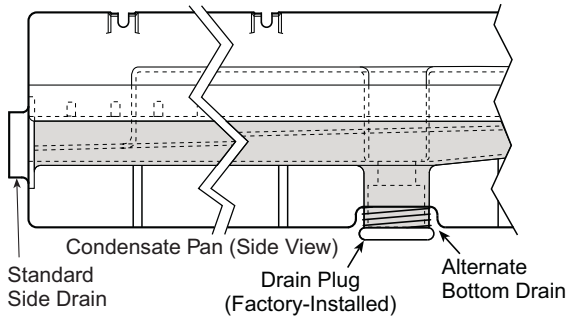

Fig. 14 — Condensate Drain Pan (Side View)

To use the alternate bottom drain connection, remove the red drain plug from the bottom connection (use a 1/2 in. square socket drive extension) and install it in the side drain connection.

The piping for the condensate drain and external trap can be completed after the unit is in place. See Fig. 15.

NOTE: If the alternate bottom drain is not used, check the drain plug for tightness prior to setting the unit on the roof curb.

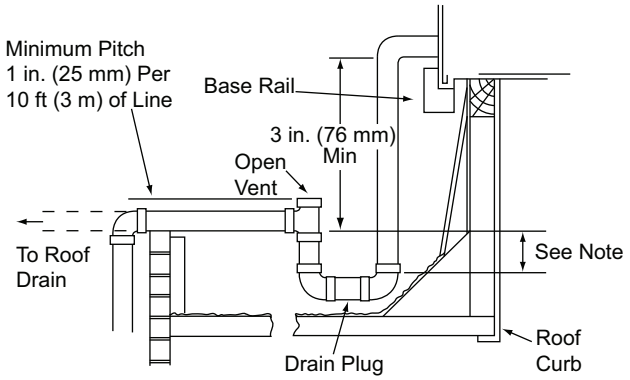

NOTE: Trap should be deep enough to offset maximum unit static difference. A 4 in. (102 mm) trap is recommended.

Fig. 15 — Condensate Drain Piping Details

All units must have an external trap for condensate drainage. Install a trap at least 4 in. (102 mm) deep and protect against freeze-up. If drain line is installed downstream from the external trap, pitch the line away from the unit at 1 in. per 10 ft (25 mm in 3 m) of run. Do not use a pipe size smaller than the unit connection (3/4 in.).

Step 10 — Make Electrical Connections

⚠ WARNING

ELECTRIC SHOCK HAZARD

Failure to follow this warning could result in personal injury or death.

Unit cabinet must have an uninterrupted, unbroken electrical ground to minimize the possibility of personal injury if an electrical fault should occur. This ground may consist of electrical wire connected to unit ground lug in control compartment, or conduit approved for electrical ground when installed in accordance with NEC; ANSI/NFPA 70, latest edition (in Canada, Canadian Electrical Code CSA [Canadian Standards Association] C22.1), and local electrical codes.

NOTE: Check all factory and field electrical connections for tightness. Field-supplied wiring shall conform with the limitations of minimum 63°F (33°C) rise.

FIELD POWER SUPPLY

If equipped with optional powered convenience outlet: the power source leads to the convenience outlet's transformer primary are not factory connected. Installer must connect these leads according to required operation of the convenience outlet. If an always-energized convenience outlet operation is desired, connect the source leads to the line side of the unit-mounted disconnect. (Check with local codes to ensure this method is acceptable in your area.) If a de-energize via unit disconnect switch operation of the convenience outlet is desired, connect the source leads to the load side of the unit disconnect. On a unit without a unit-mounted disconnect, connect the source leads to compressor contactor C and indoor fan contactor IFC pressure lugs with unit field power leads (see Fig. 16).

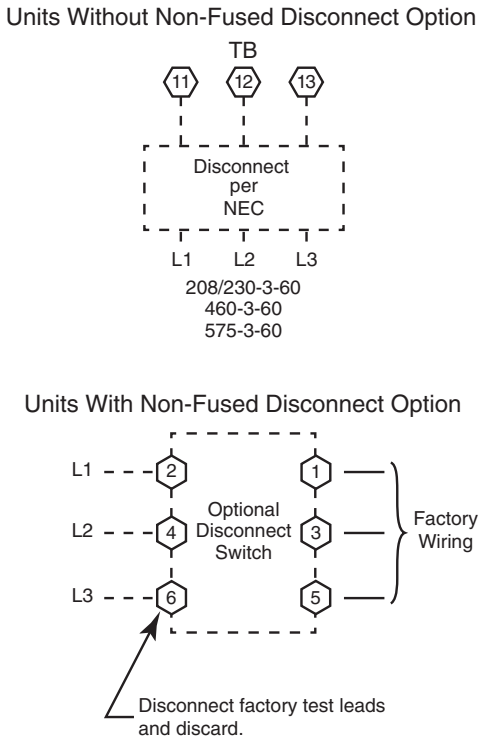

Fig. 16 — Power Wiring Connections

FIELD POWER WIRING CONNECTIONS

Field power wires are connected to the unit at line-side pressure lugs on compressor contactor C and indoor fan contactor IFC (see wiring diagram label for control box component arrangement) or at factory-installed option non-fused disconnect switch. Max wire size is no. 2 AWG (copper only).

See Table 3 for maximum wire size at connection lugs. Use copper wire only. See Fig. 16 and 17.

Table 3 — Connection Lug Minimum/Maximum Wire Sizes

CONNECTION	MINIMUM	MAXIMUM
TB1 In Unit Control Box	No. 14	No. 1
80A Disconnect Option	No. 14	No. 4
100A Disconnect Option	No. 8	1/0

NOTE: TEST LEADS — Unit may be equipped with short leads (pigtails) on the field line connection points on contactor C or optional disconnect switch. These leads are for factory run-test purposes only; remove and discard before connecting field power wires to unit connection points. Make field power connections directly to line connection pressure lugs only.

⚠ WARNING

FIRE HAZARD

Failure to follow this warning could result in personal injury, death, or property damage.

Do not connect aluminum wire between disconnect switch and unit. Use only copper wire.

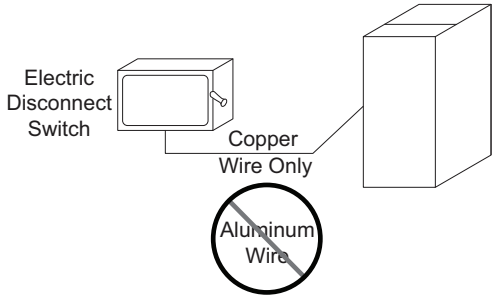

Fig. 17 — Disconnect Switch and Unit

UNITS WITH FACTORY-INSTALLED NON-FUSED DISCONNECT

The factory-installed option non-fused disconnect (NFD) switch is located in a weatherproof enclosure located under the main control box. The manual switch handle and shaft are shipped in the disconnect enclosure. Assemble the shaft and handle to the switch at this point. Discard the factory test leads (see Fig. 16).

Connect field power supply conductors to LINE side terminals when the switch enclosure cover is removed to attach the handle.

Field-Install the NFD Shaft and Handle

1. Remove the control box access panel. The NFD enclosure is located below the control box (see Fig. 18).

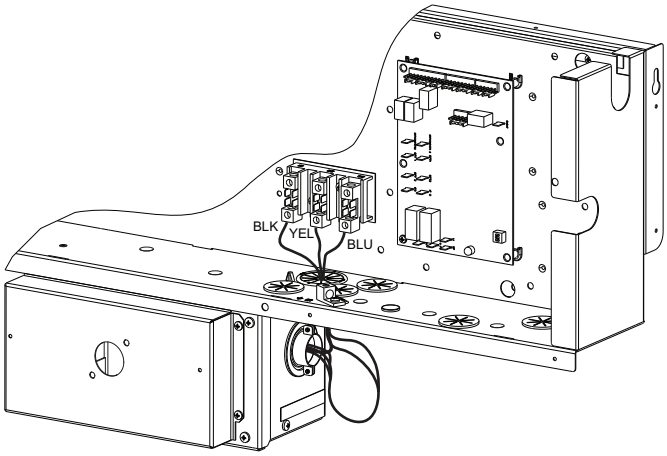

Fig. 18 — NFD Enclosure Location

2. Remove (3) cap head screws that secure the NFD enclosure front cover — (2) on the face of the cover and (1) on the left side cover. See Fig. 19.
3. Remove the front cover of the NFD enclosure.
4. Make sure the NFD shipped from the factory is at OFF position (the arrow on the black handle knob is at OFF).
5. Insert the shaft with the cross pin on the top of the shaft in the horizontal position. See Fig. 19.
6. Measure from the tip of the shaft to the top surface of the black pointer; the measurement should be 3.75 to 3.88 in. (95 to 99 mm).
7. Tighten the locking screw to secure the shaft to the NFD.
8. Turn the handle to the OFF position with red arrow pointing at OFF.
9. Install the handle on to the painted cover horizontally with the red arrow pointing to the left.
10. Secure the handle to the painted cover with (2) screws and lock washers supplied.
11. Engaging the shaft into the handle socket, re-install (3) hex screws on the NFD enclosure.
12. Re-install the unit front panel.

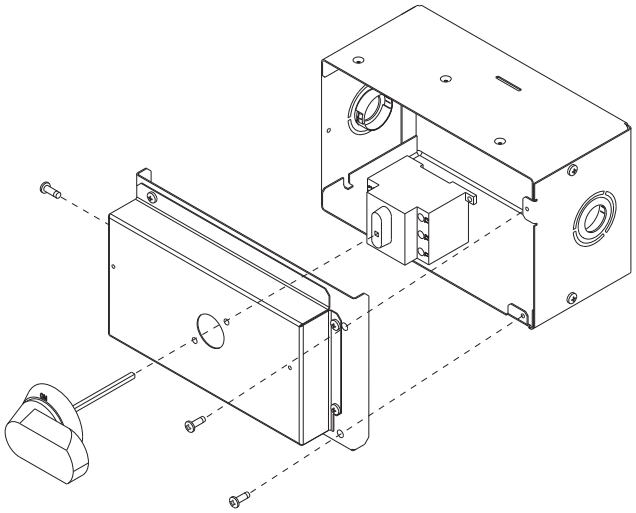

Fig. 19 — NFD Handle and Shaft Assembly

UNITS WITHOUT FACTORY-INSTALLED NON-FUSED DISCONNECT

When installing units, provide a disconnect switch per NEC (National Electrical Code) of adequate size. Disconnect sizing data is provided on the unit informative plate. Locate on unit cabinet or within sight of the unit per national or local codes. Do not cover unit informative plate if mounting the disconnect on the unit cabinet.

FIELD WIRING COMPLIANCE

Field wiring must comply with NEC and all local codes. Size wire based on MCA (Minimum Circuit Amps) on the unit informative plate. Refer to Fig. 16 and the unit label diagram for power wiring connections to the unit power terminal blocks and equipment ground. Maximum wire size is no. 2 ga AWG per pole.

Provide a ground-fault and short-circuit over-current protection device (fuse or breaker) per NEC Article 440 (or local codes). Refer to unit informative data plate for MOCP (Maximum Overcurrent Protection) device size.

All units except 208/230-v units are factory wired for the voltage shown on the nameplate. If the 208/230-v unit is to be connected to a 208-v power supply, the control transformer must be rewired by moving the black wire with the 1/4 in. female spade connector from the 230-v connection and moving it to the 200-v 1/4 in. male terminal on the primary side of the transformer. Refer to unit label diagram for additional information. Field power wires will be connected line-side pressure lugs on the power terminal block or at factory-installed option non-fused disconnect.

Voltage to compressor terminals during operation must be within voltage range indicated on unit nameplate. On 3-phase units, voltages between phases must be balanced within 2 percent and the current within 10 percent. Use the following formula to determine the percent of voltage imbalance. Operation on improper line voltage or excessive phase imbalance constitutes abuse and may cause damage to electrical components. Such operation would invalidate any applicable Carrier warranty.

$$\text{\% Voltage Imbalance} = 100 \times \frac{\text{max voltage deviation from average voltage}}{\text{average voltage}}$$

Example: Supply voltage is 230-3-60

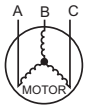

AB = 224-v
BC = 231-v
AC = 226-v

$$\text{Average Voltage} = \frac{(224 + 231 + 226)}{3} = \frac{681}{3} = 227$$

Determine maximum deviation from average voltage.

(AB) 227-224 = 3-v

(BC) 231-227 = 4-v

(AC) 227-226 = 1-v

Maximum deviation is 4-v.

Determine percent of voltage imbalance.

$$\text{\% Voltage Imbalance} = 100\text{x} \frac{4}{227} = 1.76\%$$

This amount of phase imbalance is satisfactory as it is below the maximum allowable 2%.

IMPORTANT: If the supply voltage phase imbalance is more than 2%, contact your local electric utility company immediately.

CONVENIENCE OUTLETS

⚠ WARNING

ELECTRICAL OPERATION HAZARD

Failure to follow this warning could result in personal injury or death.

Units with convenience outlet circuits may use multiple disconnects. Check convenience outlet for power status before opening unit for service. Locate its disconnect switch, if appropriate, and open it. Lock-out and tag-out this switch, if necessary.

Two types of convenience outlets are offered on 50FE models: non-powered and unit-powered. Both types provide a 125-v GFCI (ground-fault circuit-interrupter) duplex receptacle rated at 15-A behind a hinged waterproof access cover, located on the end panel of the unit. See Fig. 20.

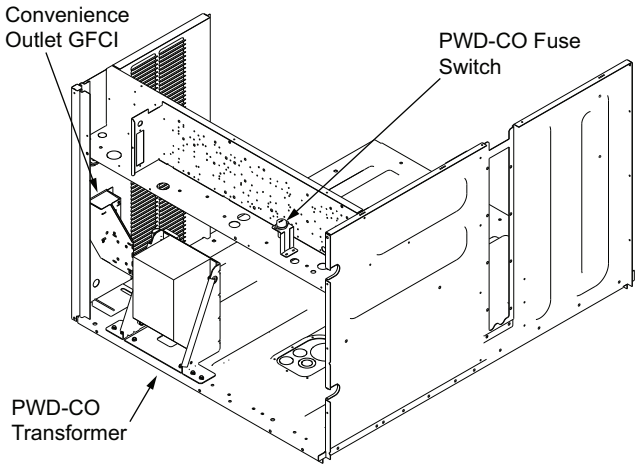

Fig. 20 — Convenience Outlet Location

Figure 21 shows the Convenience Outlet Utilization label which is located below the convenience outlet.

NOTICE

Convenience Outlet Utilization

Maximum Continuous use: 15 Amps for receptacle outlets, and 8 Amps for factory supplied transformers

50HJ542739 | C

Fig. 21 — Convenience Outlet Utilization Notice Label

Installing Weatherproof Cover

A weatherproof while-in-use cover for the factory-installed convenience outlets is now required by UL standards. This cover cannot be factory-mounted due its depth; it must be installed at unit installation. For shipment, the convenience outlet is covered with a blank cover plate.

On units with electromechanical controls the weatherproof cover kit is shipped in the unit's control box. The kit includes the hinged cover, a backing plate and gasket.

On units with a factory installed direct digital controller (SystemVu™ controls) the weatherproof cover kit is secured to the basepan underneath the control box. See Fig. 22.

Disconnect All Power To Unit and Convenience Outlet. Lock-Out and Tag-Out All Power.

Remove the blank cover plate at the convenience outlet; discard the blank cover.

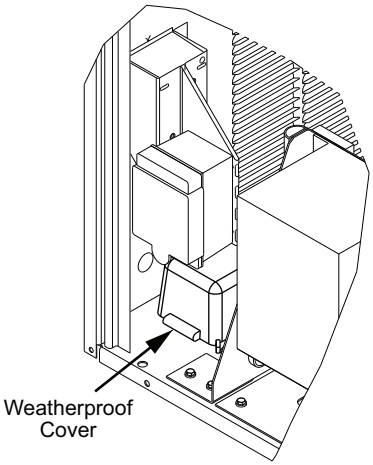

Fig. 22 — Weatherproof Cover — Shipping Location on Units with Factory-Installed DDC

Loosen the two screws at the GFCI duplex outlet, until approximately 1/2 in. (13 mm) under screw heads are exposed. Press the gasket over the screw heads. Slip the backing plate over the screw heads at the keyhole slots and align with the gasket; tighten the two screws until snug (do not over-tighten).

Mount the weatherproof cover to the backing plate as shown in Fig. 23. Remove two slot fillers in the bottom of the cover to permit service tool cords to exit the cover. Check for full closing and latching.

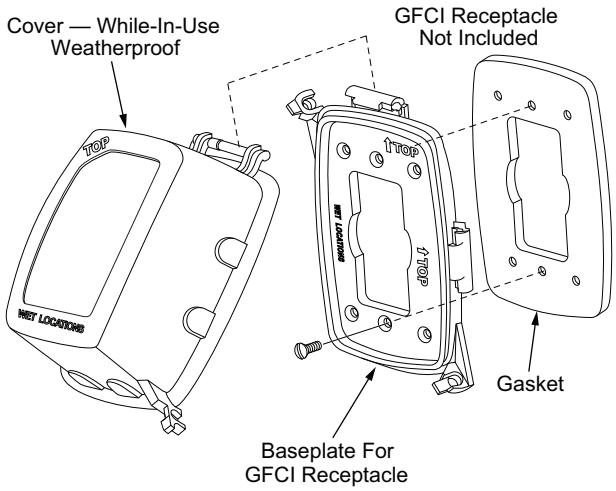

Fig. 23 — Weatherproof Cover Installation

Non-Powered Convenience Outlet

This type requires the field installation of a general-purpose 125-v 15-A circuit powered from a source elsewhere in the building. Observe national and local codes when selecting wire size, fuse or breaker requirements and disconnect switch size and location. Route 125-v power supply conductors into the bottom of the utility box containing the duplex receptacle.

Unit-Powered Convenience Outlet

A unit-mounted transformer is factory-installed to stepdown the main power supply voltage to the unit to 115-v at the duplex receptacle. This option also includes a manual switch with fuse, located in a utility box and mounted on a bracket behind the convenience outlet; access is through the unit's control box access panel. Refer to Fig. 20.

The primary leads to the convenience outlet transformer are not factory-connected. Selection of primary power source is a customer option. If local codes permit, the transformer primary leads can be connected at the line-side terminals on the unit-mounted non-fused disconnect; this will provide service power to the unit when the unit disconnect switch is open. Other connection methods will result in the convenience outlet circuit being de-energized when the unit disconnect switch is open. See Fig. 24. On a unit without a unit-mounted disconnect, connect the source leads to the main terminal block (TB1).

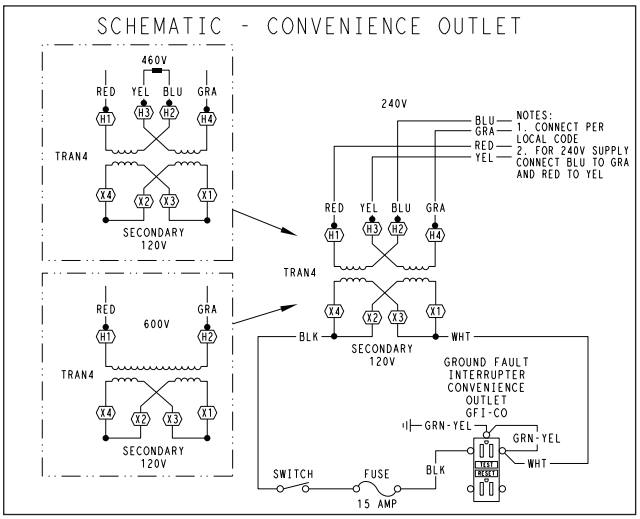

UNIT VOLTAGE	CONNECT AS	PRIMARY CONNECTIONS	TRANSFORMER TERMINALS
208, 230	240	L1: RED +YEL L2: BLU + GRA	H1 + H3 H2 + H4
460	480	L1: RED Splice BLU + YEL L2: GRA	H1 H2 + H3 H4
575	600	L1: RED L2: GRA	H1 H2

Fig. 24 — Powered Convenience Outlet Wiring

ALL UNITS

Test the GFCI receptacle by pressing the TEST button on the face of the receptacle to trip and open the receptacle. Check for proper grounding wires and power line phasing if the GFCI receptacle does not trip as required. Press the RESET button to clear the tripped condition.

Using Unit-Mounted Convenience Outlets

Units with unit-mounted convenience outlet circuits will often require that two disconnects be opened to de-energize all power to the unit. Treat all units as electrically energized until the convenience outlet power is also checked and de-energization is confirmed. Observe National Electrical Code Article 210, Branch Circuits, for use of convenience outlets.

Fuse On Power Type

The factory fuse is a Bussman™[1] Fusetron™[1] T-15, non-renewable screw-in (Edison base) type plug fuse.

FACTORY-OPTION THRU-BASE CONNECTIONS

This service connection kit consists of a a 1/2 in. electrical bulkhead connector and a 3/4 in. electrical bulkhead connector, factory-installed in the embossed (raised) section of the unit basepan in the condenser section. The 3/4 in. bulkhead connector enables the low-voltage control wires to pass through the basepan. The 1/2 in. electrical bulkhead connector allows the high-voltage power wires to pass through the basepan. See Fig. 25.

1. Third-party trademarks and logos are the property of their respective owners.

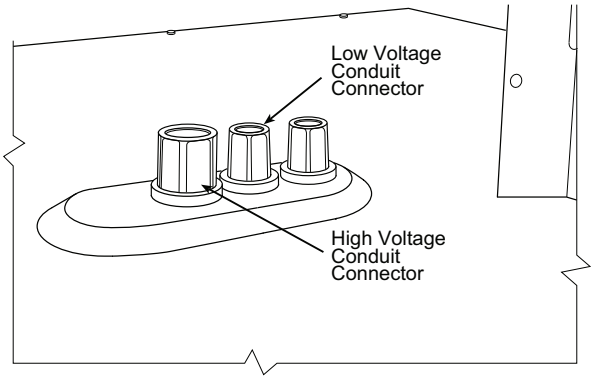

Fig. 25 — Thru-Base Connection Fittings

Check tightness of connector lock nuts before connecting electrical conduits.

Field-supplied and field-installed liquid tight conduit connectors and conduit may be attached to the connectors on the basepan. Pull correctly rated high voltage through appropriate conduits. Connect the power conduit to the internal disconnect (if unit is so equipped) or to the external disconnect (through unit side panel). A hole must be field cut in the main control box bottom on the left side so the 24-v control connections can be made. Connect the control power conduit to the unit control box at this hole.

UNITS WITHOUT THRU-BASE CONNECTIONS

1. Install power wiring conduit through side panel openings. Install conduit between disconnect and control box.
2. Install power lines to terminal connections as shown in Fig. 16.

FIELD CONTROL WIRING

The 50FE unit requires an external temperature control device. This device can be a thermostat (field-supplied) or a SystemVu™ controller (available as factory-installed option for use on a Carrier Comfort Network® or as a stand alone control). All field added wire must comply with UL and local NEC standards. See Unit without Thru-Base Connection Kit on page 16 and use routing path shown in Fig. 27 to help with compliance as needed.

THERMOSTAT

Select a Carrier-approved accessory thermostat. When electric heat is installed in the 50FE unit, the thermostat must be capable of energizing the G terminal (to energize the Indoor Fan Contactor) whenever there is a space call for heat (energizing the W1 terminal). The accessory thermostats listed on the unit price pages can provide this signal but they are not configured to enable this signal as shipped.

Install the accessory thermostat according to installation instructions included with the accessory.

Locate the thermostat accessory on a solid wall in the conditioned space to sense average temperature in accordance with the thermostat installation instructions.

If the thermostat contains a logic circuit requiring 24-v power, use a thermostat cable or equivalent single leads of different colors with minimum of seven leads. If the thermostat does not require a 24-v source (no "C" connection required), use a thermostat cable or equivalent with minimum of six leads. See Fig. 26. Check the thermostat installation instructions for additional features which might require additional conductors in the cable.

For wire runs up to 50 ft (15 m), use no. 18 AWG (American Wire Gauge) insulated wire [35°C (95°F) minimum]. For 50 to 75 ft (15 to 23 m), use no. 16 AWG insulated wire [35°C (95°F) minimum]. For over 75 ft (23 m), use no. 14 AWG insulated wire [35°C (95°F) minimum]. All wire sizes larger than no. 18 AWG cannot be directly connected to the thermostat and will require a junction box and splice at the thermostat.

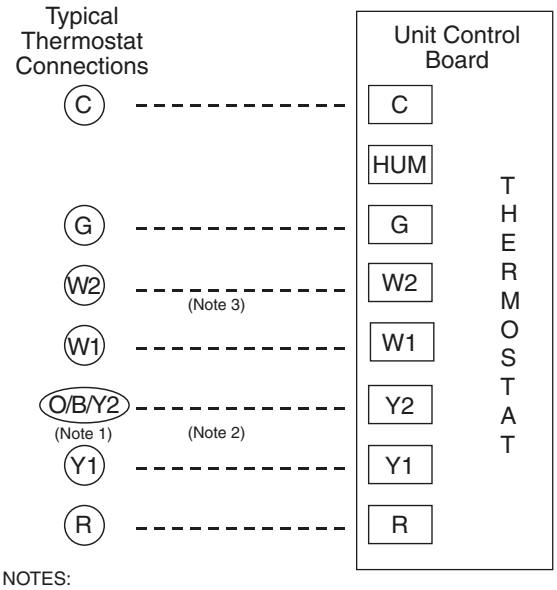

NOTES:
1. Typical multi-function marking. Follow manufacturer's configuration instructions to select Y2.
2. Y2 to Y2 connection required on single-stage cooling units when integrated economizer function is desired.
3. W2 connection not required on units with single-stage heating.

- - - Field Wiring

Fig. 26 — Typical Low-Voltage Control Connections

UNIT WITHOUT THRU-BASE CONNECTION KIT

Pass the thermostat control wires through the hole provided in the corner post; then feed the wires through the raceway built into the corner post to the control box. Pull the wires over to the terminal strip on the upper-left corner of the Unit Control Board. See Fig. 27.

NOTE: If thru-the-bottom connections accessory is used, refer to the accessory installation instructions for information on routing power and control wiring.

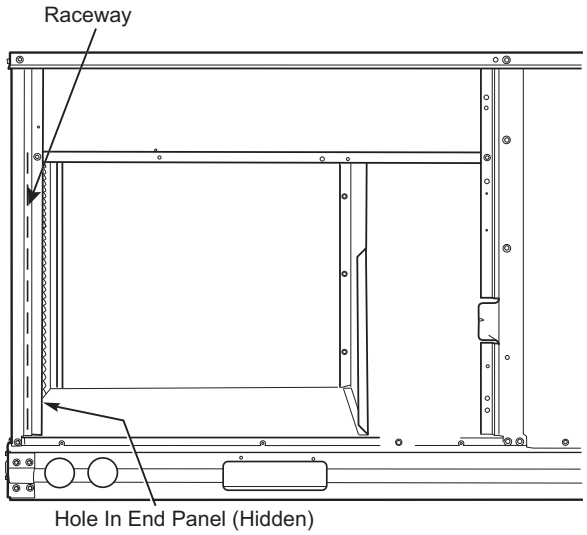

Fig. 27 — Field Control Wiring Raceway

HEAT ANTICIPATOR SETTINGS

Set heat anticipator settings at 0.14 amp for the first stage and 0.14 amp for second-stage heating, when available.

ELECTRIC HEATERS

The 50FE units may be equipped with field-installed accessory electric heaters. The heaters are modular in design, with heater frames holding open coil resistance wires strung through ceramic insulators, line-break limit switches and a control contactor.

Heater modules are installed in the compartment below the indoor (supply) fan outlet. Access is through the indoor access panel. See Fig. 28-30.

Not all available heater modules may be used in every unit. Use only those heater modules that are UL listed for use in a specific size unit. Refer to the label on the unit cabinet for the list of approved heaters.

Refer to the *Small Roof Top Units Accessory Electric Heater and Single Point Box* installation instructions for further details.

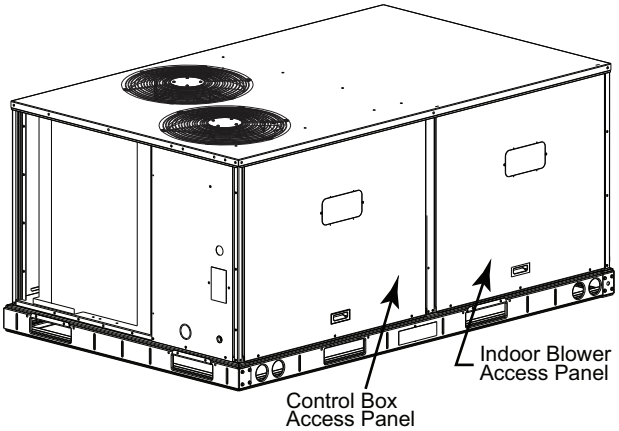

Fig. 28 — Typical Access Panel Location

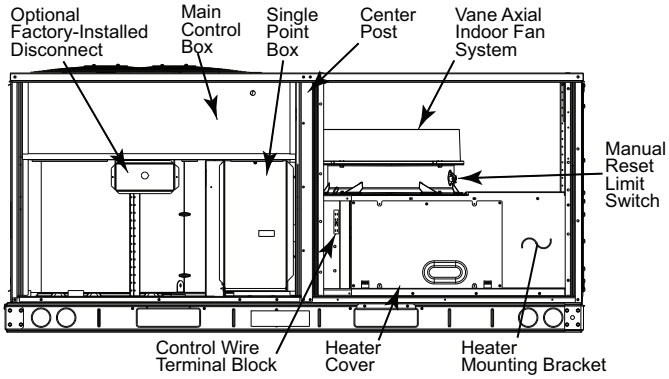

Fig. 29 — Typical Component Location

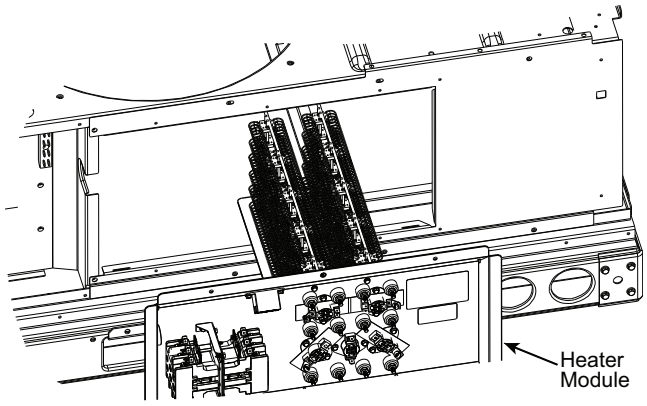

Fig. 30 — Typical Heater Module Installation

SINGLE POINT BOXES AND SUPPLEMENTARY FUSES

When the unit MOCP device value exceeds 60-A, unit-mounted supplementary fuses are required for each heater circuit. These fuses are included in accessory single point boxes, with power distribution and fuse blocks. The single point box will be installed directly under the unit control box, just to the left of the partition separating the indoor section (with electric heaters) from the outdoor section. The single point box has a hinged access cover. See Fig. 31. The single point box also includes a set of power taps and pigtails to complete the wiring between the single point box and the unit's main control box terminals. Refer to the Small Roof Top Units Accessory Electric Heater and single point box installation instructions for details on tap connections.

All fuses on 50FE units are 60-A. (Note that all heaters are qualified for use with a 60-A fuse, regardless of actual heater ampacity, so only 60-A fuses are necessary.)

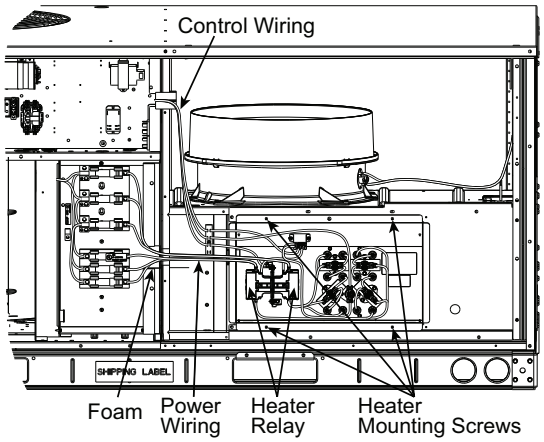

Fig. 31 — Typical Single Point Installation

SINGLE POINT BOXES WITHOUT FUSES

Unit heater applications not requiring supplemental fuses require a special single point box without any fuses. The accessory single point boxes contain a set of power taps and pigtails to complete the wiring between the single point box and the unit's main control box terminals. Refer to accessory heater and single point box installation instructions for details on tap connections.

LOW-VOLTAGE CONTROL CONNECTIONS

Pull the low-voltage control leads from the heater module — WHT, VIO and BRN to the 4-pole terminal board TB4 located on the heater bulkhead to the left of the Heater module. Connect the WHT lead from Heater circuit no. 1 to terminal TB4-1. For 2 stage heating, connect the VIO lead from Heater circuit no. 2 to terminal TB4-2. Connect the BRN lead(s) to terminal TB4-3. See Fig. 32.

HUMIDI-MIZER SYSTEM CONTROL CONNECTIONS

Humidi-MiZer® Space RH Controller

NOTE: The Humidi-MiZer system is a factory-installed option. Humidi-MiZer system is not available for single phase (-3 voltage code) models.

The Humidi-MiZer dehumidification system requires a field-supplied and field-installed space relative humidity control device. This device may be a separate humidistat control (contact closes on rise in space RH above control setpoint) or a combination thermostat-humidistat control device such as Carrier's Edge® Pro Thermidistat™ device with isolated contact set for dehumidification control. See Fig. 33 and 34. The humidistat is normally used in applications where a temperature control is already provided (units with SystemVu™ control).

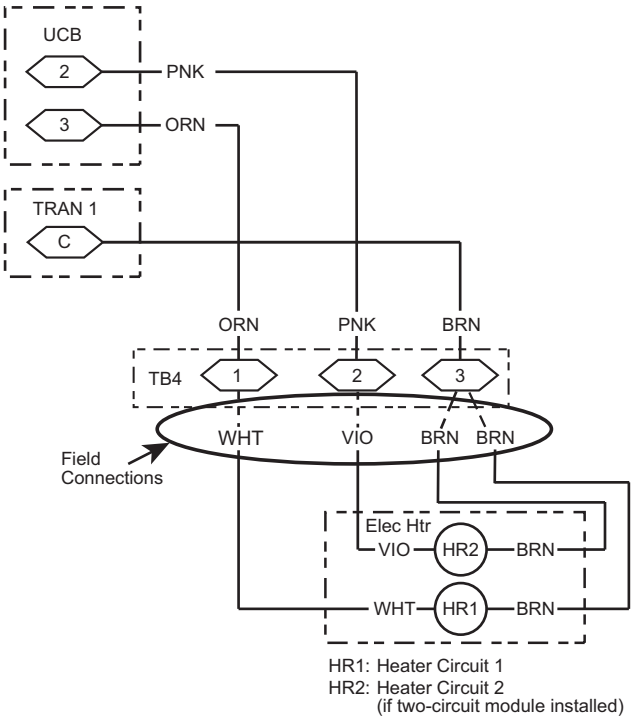

Fig. 32 — Accessory Electric Heater Control Connections

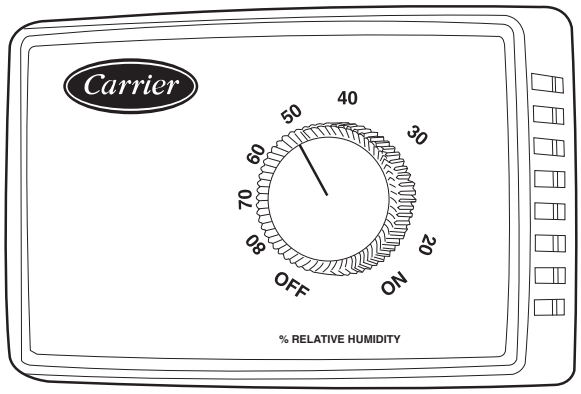

Fig. 33 — Accessory Field-Installed Humidistat

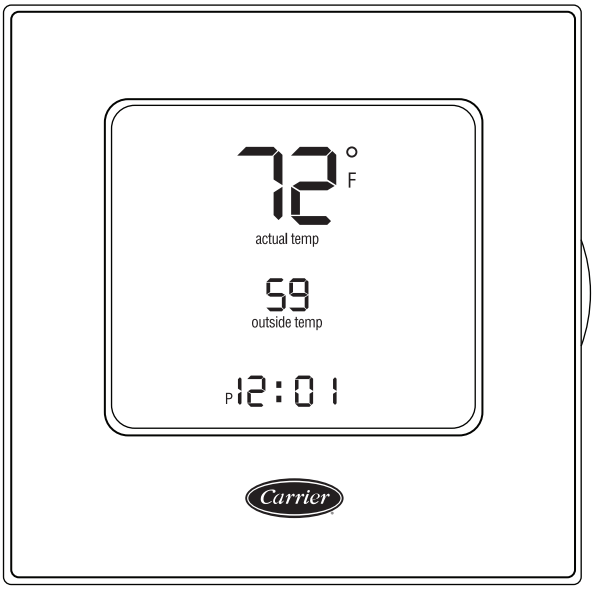

Fig. 34 — Edge Pro Thermidistat

Connecting the Carrier Humidistat (HL38MG029)

1. Route the humidistat 2-conductor cable (field-supplied) through the hole provided in the unit corner post.
2. Feed wires through the raceway built into the corner post (refer to Fig. 27) to the 24-v barrier located on the left side of the control box. The raceway provides the UL-required clearance between high-voltage and low-voltage wiring.
3. Connect one of the leads from the 2-conductor cable to the HUM terminal on the UCB (Unit Control Board). Connect the other lead to the R terminal on the UCB. See Fig. 35.

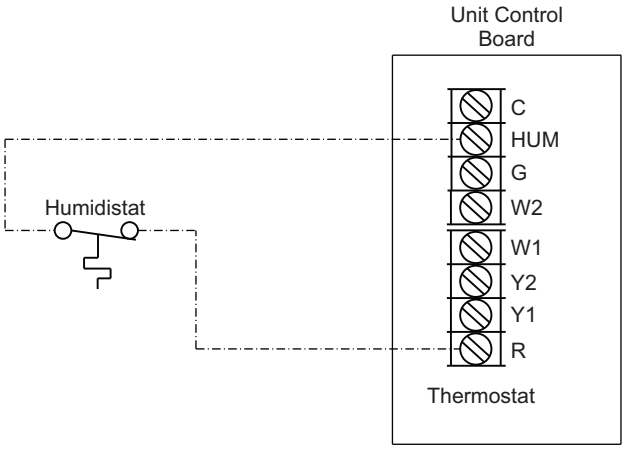

Fig. 35 — Humidistat Connections to UCB

Connecting the Thermidistat device (33CS2PPRH-01)

1. Route the Thermidistat multi-conductor thermostat cable (field-supplied) through the hole provided in the unit corner post.
2. Feed wires through the raceway built into the corner post (refer to Fig. 27) to the 24-v barrier located on the left side of the control box. The raceway provides the UL-required clearance between high-voltage and low-voltage wiring.
3. The Thermidistat has dry contacts at terminals D1 and D2 for dehumidification operation (refer to Fig. 36). Connect D1 to the R terminal on the UCB. Connect D2 to the HUM terminal on the UCB. Refer to the installation instructions included with the Carrier Edge® Pro Thermidistat device for more information.

TYPICAL UNIT WIRING DIAGRAMS

See Fig. 37-40 for examples of typical unit control and power wiring diagrams. These wiring diagrams are mounted on the inside of the unit control box cover.

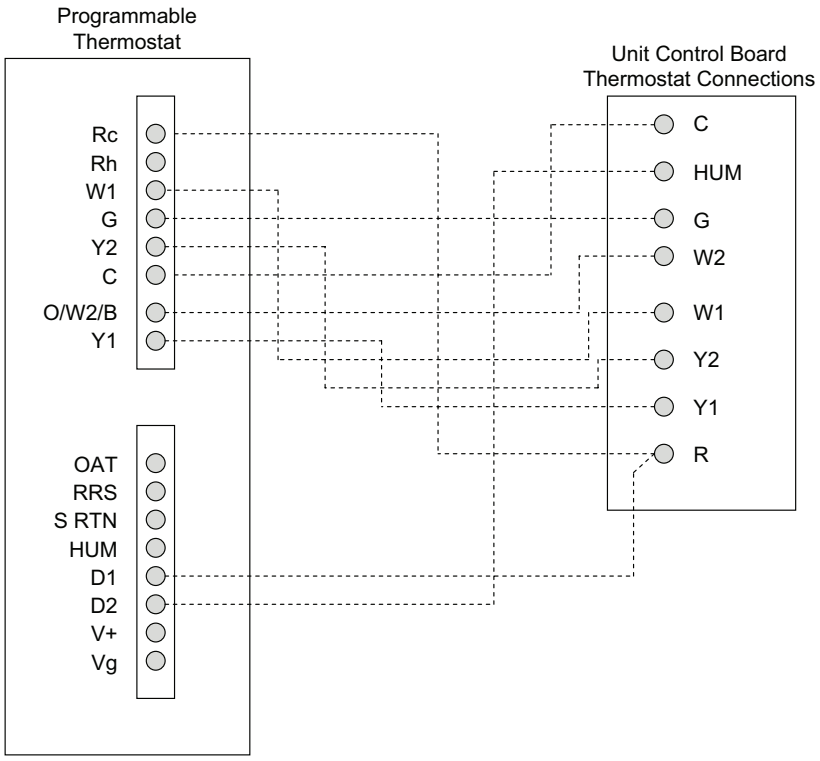

Fig. 36 — Typical Rooftop Unit with Humidi-MiZer® Adaptive Dehumidification System and Edge® Pro Thermidistat Device

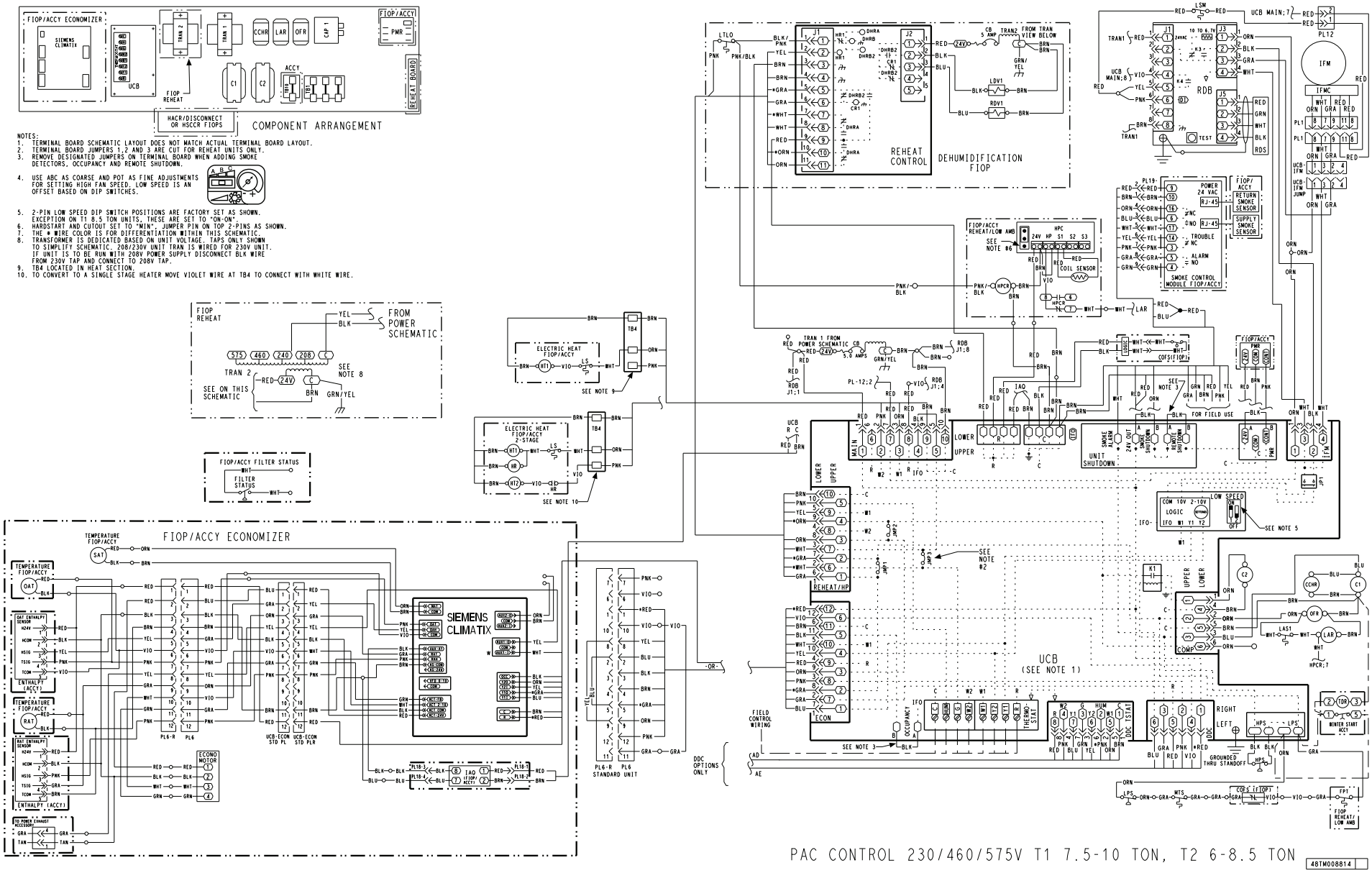

Fig. 37 — Typical Control Wiring Diagram, Electromechanical with POL224 (50FE 08-12 230/460/575-3-60 Unit Shown)

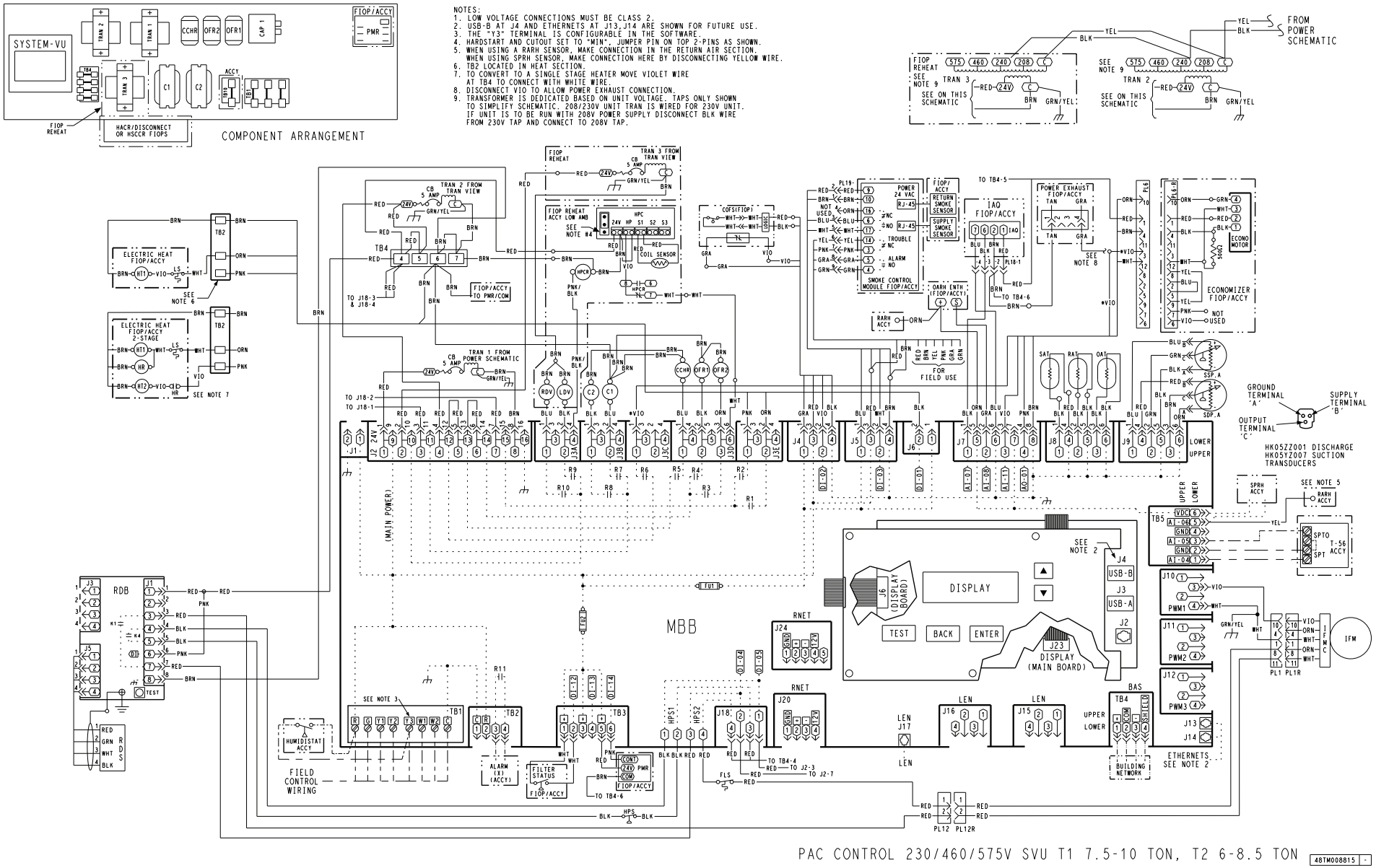

Fig. 38 — Typical Control Wiring Diagram, SystemVu™ Controller (50FE 08-12 230/460/575-3-60 Unit Shown)

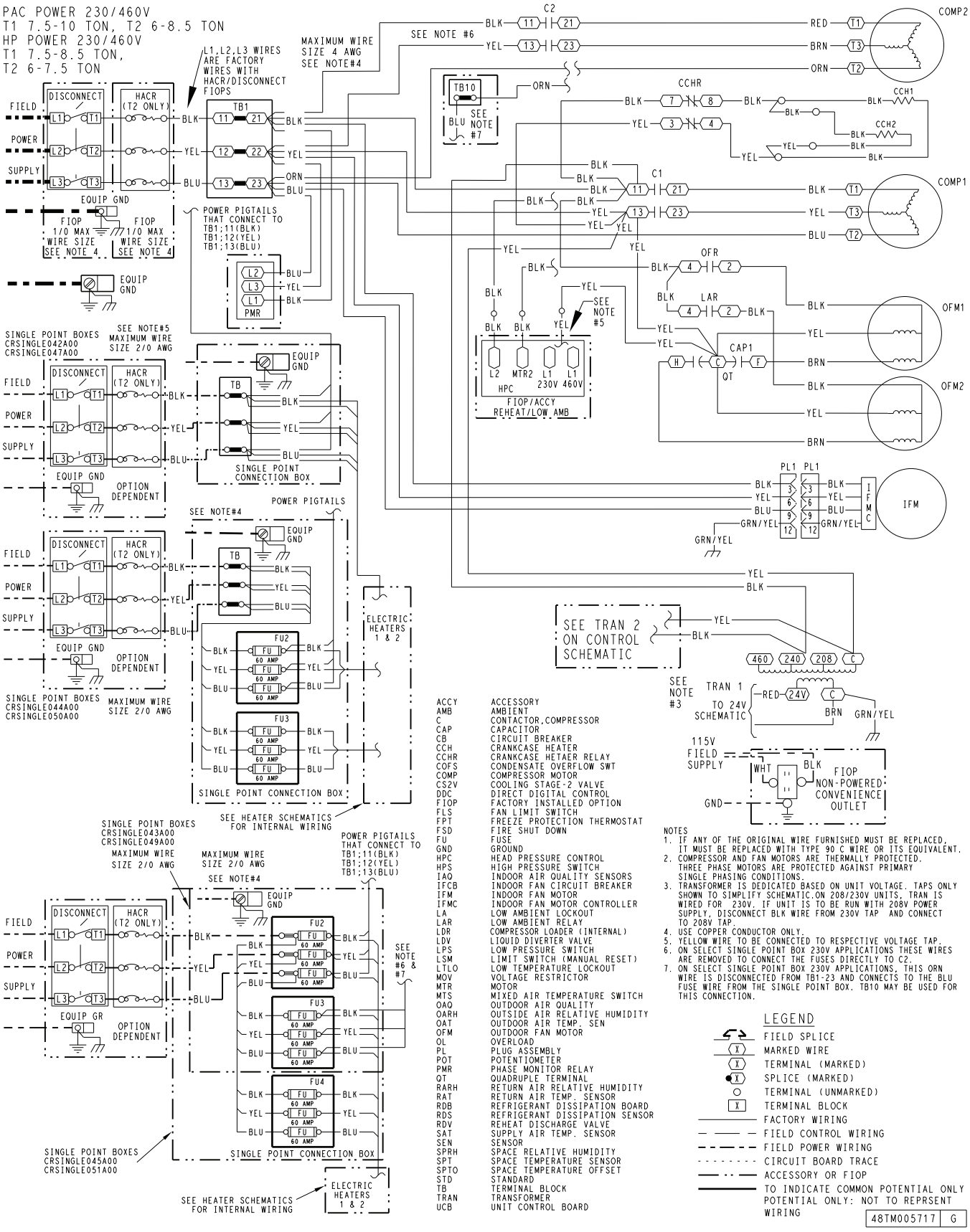

ACCY	ACCESSORY
AMB	AMBIENT
C	CONTACTOR,COMPRESSOR
CAP	CAPACITOR
CB	CIRCUIT BREAKER
CCH	CRANKCASE HEATER
CCHR	CRANKCASE HETAER RELAY
COFS	CONDENSATE OVERFLOW SWT
COMP	COMPRESSOR MOTOR
CS2V	COOLING STAGE-2 VALVE
DDC	DIRECT DIGITAL CONTROL
FIOP	FACTORY INSTALLED OPTION
FLS	FAN LIMIT SWITCH
FPT	FREEZE PROTECTION THERMOSTAT
FSD	FIRE SHUT DOWN
FU	FUSE
GND	GROUND
HPC	HEAD PRESSURE CONTROL
HPS	HIGH PRESSURE SWITCH
IAQ	INDOOR AIR QUALITY SENSORS
IFCB	INDOOR FAN CIRCUIT BREAKER
IFM	INDOOR FAN MOTOR
IFMC	INDOOR FAN MOTOR CONTROLLER
LA	LOW AMBIENT LOCKOUT
LAR	LOW AMBIENT RELAY
LDR	COMPRESSOR LOADER (INTERNAL)
LDV	LIQUID DIVERTER VALVE
LPS	LOW PRESSURE SWITCH
LSM	LIMIT SWITCH (MANUAL RESET)
LTLO	LOW TEMPERATURE LOCKOUT
MOV	VOLTAGE RESTRICTOR
MTR	MOTOR
MTS	MIXED AIR TEMPERATURE SWITCH
OAQ	OUTDOOR AIR QUALITY
OARH	OUTSIDE AIR RELATIVE HUMIDITY
OAT	OUTDOOR AIR TEMP. SEN
OFM	OUTDOOR FAN MOTOR
OL	OVERLOAD
PL	PLUG ASSEMBLY
POT	POTENTIOMETER
PMR	PHASE MONITOR RELAY
QT	QUADRUPLE TERMINAL
RARH	RETURN AIR RELATIVE HUMIDITY
RAT	RETURN AIR TEMP. SENSOR
RDB	REFRIGERANT DISSIPATION BOARD
RDS	REFRIGERANT DISSIPATION SENSOR
RDV	REHEAT DISCHARGE VALVE
SAT	SUPPLY AIR TEMP. SENSOR
SEN	SENSOR
SPRH	SPACE RELATIVE HUMIDITY
SPT	SPACE TEMPERATURE SENSOR
SPTO	SPACE TEMPERATURE OFFSET
STD	STANDARD
TB	TERMINAL BLOCK
TRAN	TRANSFORMER
UCB	UNIT CONTROL BOARD

NOTES
1. IF ANY OF THE ORIGINAL WIRE FURNISHED MUST BE REPLACED, IT MUST BE REPLACED WITH TYPE 90 C WIRE OR ITS EQUIVALENT.
2. COMPRESSOR AND FAN MOTORS ARE THERMALLY PROTECTED. THREE PHASE MOTORS ARE PROTECTED AGAINST PRIMARY SINGLE PHASING CONDITIONS.
3. TRANSFORMER IS DEDICATED BASED ON UNIT VOLTAGE. TAPS ONLY SHOWN TO SIMPLIFY SCHEMATIC.ON 208/230V UNITS, TRAN IS WIRED FOR 230V. IF UNIT IS TO BE RUN WITH 208V POWER SUPPLY, DISCONNECT BLK WIRE FROM 230V TAP AND CONNECT TO 208V TAP.
4. USE COPPER CONDUCTOR ONLY.
5. YELLOW WIRE TO BE CONNECTED TO RESPECTIVE VOLTAGE TAP.
6. ON SELECT SINGLE POINT BOX 230V APPLICATIONS THESE WIRES ARE REMOVED TO CONNECT THE FUSES DIRECTLY TO C2.
7. ON SELECT SINGLE POINT BOX 230V APPLICATIONS, THIS ORN WIRE IS DISCONNECTED FROM TB1-23 AND CONNECTS TO THE BLU FUSE WIRE FROM THE SINGLE POINT BOX. TB10 MAY BE USED FOR THIS CONNECTION.

Fig. 39 — Typical Power Wiring Diagram, for Units with Electromechanical Controller – 50FE 08-12, 230/460-3-60 Units Shown

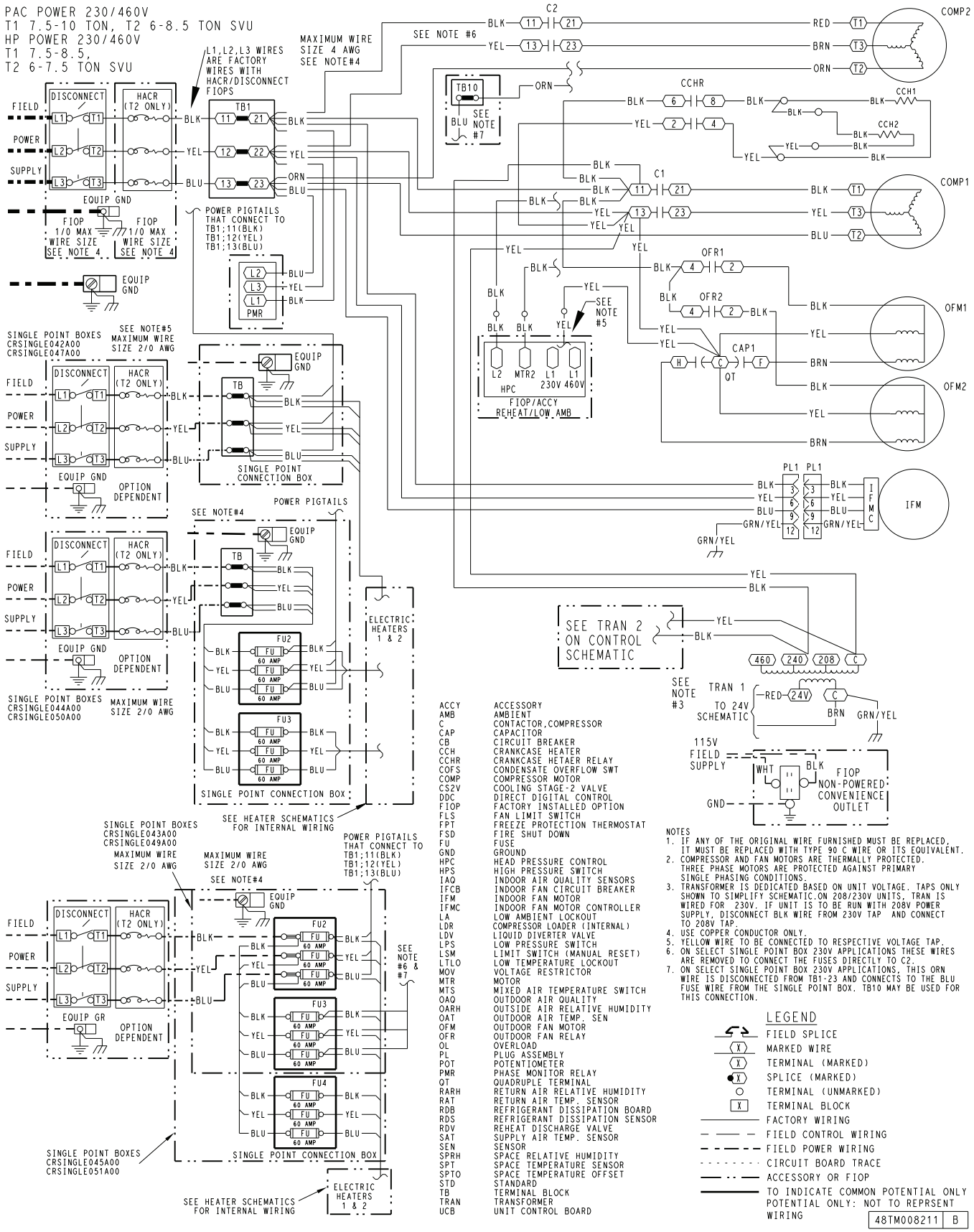

Fig. 40 — Typical Power Wiring Diagram, for Units with SystemVu™ Controller – 50FE 08-12, 230/460-3-60 Units Shown

Humidi-MiZer Dehumidification System (Optional)

Units with the factory-installed Humidi-MiZer system option are capable of providing multiple modes of improved dehumidification as a variation of the normal cooling cycle. The Humidi-MiZer system option includes additional valves in the liquid line and discharge line of the refrigerant circuit and a reheat coil downstream of the evaporator. Humidi-MiZer system operation requires the installation and configuration of a relative humidity switch input or a space relative humidity sensor. These provide the dehumidification demand to the control.

With Humidi-MiZer system units there are two additional HVAC modes available for the user: Dehumidification and Dehum/Mech Cooling. Selection of the Dehum/Mech Cooling mode is determined by the dehumidification demand and the cooling demand. Table 4 shows the corresponding circuit mode and output status for the different demand combinations.

NORMAL COOLING

This mode is the standard rated cooling system performance, and occurs when there is cooling demand without dehumidification demand.

For 50FE 08-12 units, refrigerant flows from the outdoor condenser through the de-energized 3-Way Liquid Diverter Valve (LDV) to the expansion device bypassing the reheat condenser coil. The Reheat Discharge Valve (RDV) is closed. (See Fig. 41.)

DEHUM/MECH COOLING (SUBCOOLING) MODE

This mode increases the latent heat removal and decreases sensible cooling compared to normal cooling. This occurs when there is a cooling and dehumidification demands.

For 50FE 08-12 units, refrigerant flows from the outdoor condenser, through the energized 3-Way LDV and through the reheat condenser coil to the expansion device. The RDV is closed. (See Fig. 42.)

DEHUMIDIFICATION (HOT GAS REHEAT) MODE

This mode provides maximum latent cooling with little to no sensible capacity. This occurs when there is a dehumidification demand and no cooling demand.

For 50FE 08-12 units, this is the same as the Subcooling mode but the RDV is open, which provides some compressor discharge gas to the reheat condenser to further increase the reheat of the evaporator air stream. (See Fig. 43.)

REHEAT CONTROL

When there is only a cooling demand, the unit will operate in normal cooling mode. When there is only dehumidification demand, the unit will operate in Dehumidification mode (Hot Gas Reheat). When there is both cooling demand and dehumidification demand, the unit will operate in Dehum/Mech Cooling mode (Subcooling). During Dehumidification and Dehum/Mech cooling mode, the unit will run all cooling stages.

Table 4 — Humidi-MiZer System Control Modes (50FE 08-12)

DEMAND AND MODE			OUTPUTS	LDV Valve 3-WAY	RDV Valve 2-WAY
Space Humidity	Circuit Cooling Demand	Circuit Mode	Circuit Compressor		
—	—	No power	Off	Off	Off (closed)
Low	No	Off	Off	Off	Off (closed)
	Yes	Cool	On	Off	Off (closed)
High	Yes	Dehum/Mech Cooling	On	On	Off (closed)
	No	Dehum	On	On	On (open)

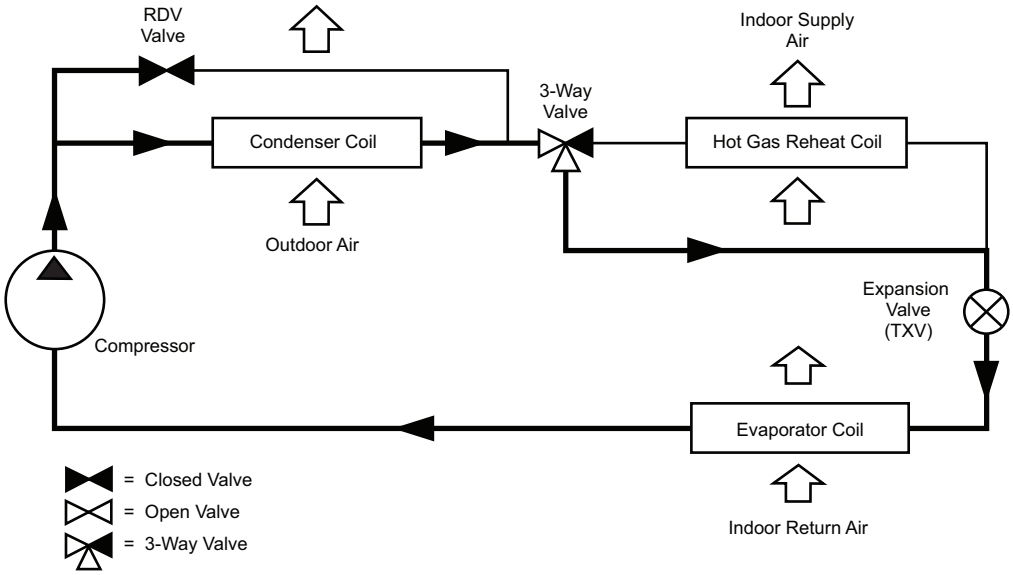

Fig. 41 — Normal Cooling Mode — Humidi-MiZer System for 50FE 08-12

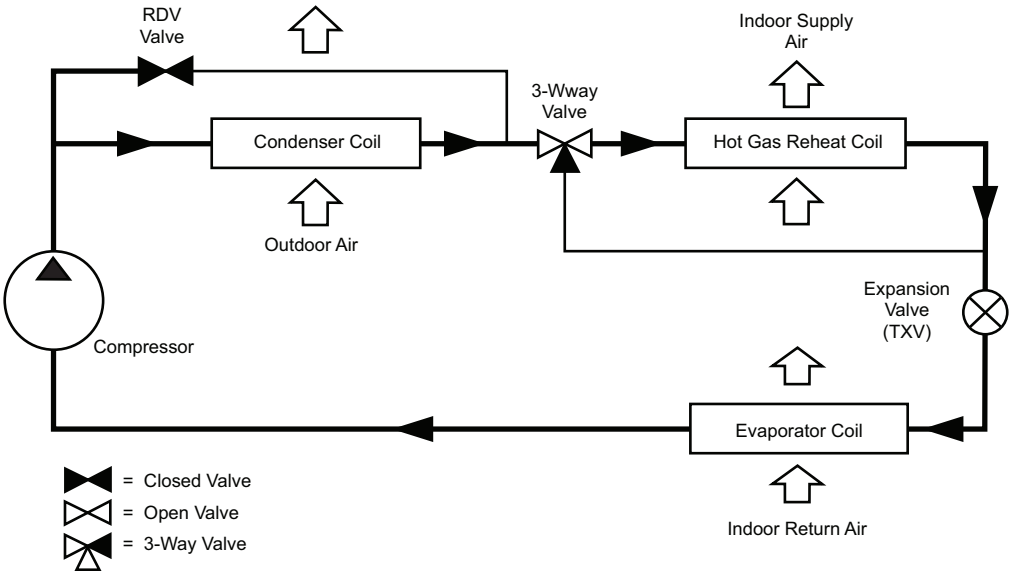

Fig. 42 — Subcooling Mode — Humidi-MiZer System for 50FE 08-12

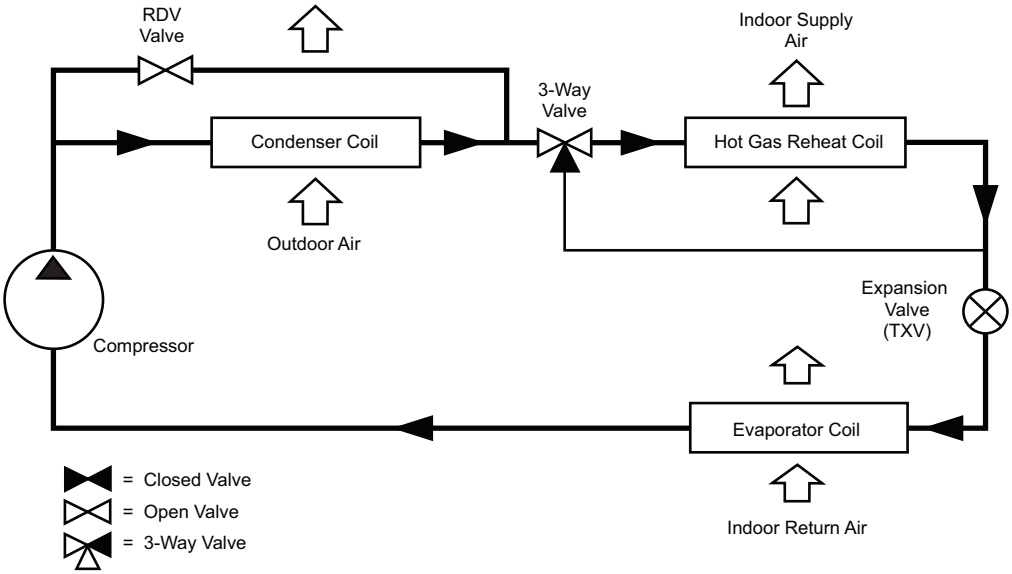

Fig. 43 — Hot Gas Reheat Mode — Humidi-MiZer System for 50FE 08-12

Leak Dissipation System

50FE units use R-454B refrigerant. These units are equipped with a factory installed R-454B leak dissipation system to ensure safe operation in the event of a refrigerant leak. This systems consists of an A2L sensor (Fig. 44) and the dissipation control board (see Fig. 45) which are located in the Indoor Coil section of the unit (see the view labeled "BACK" in Fig. 2 on page 6). The A2L sensor is located between the indoor coil and the air filters.

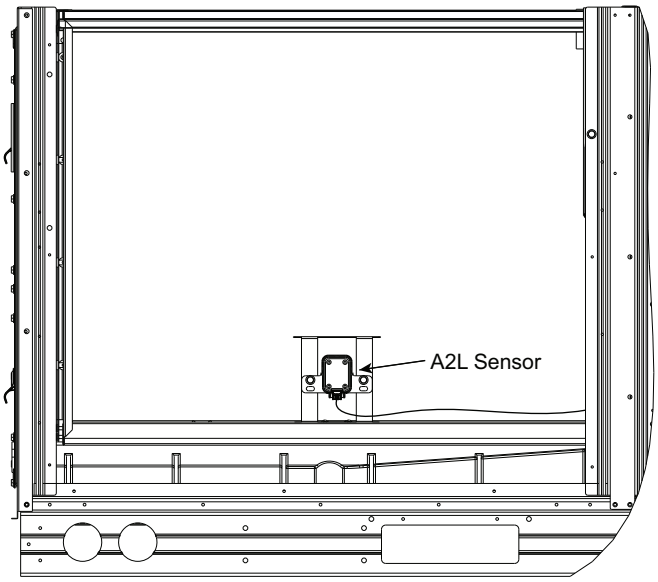

Fig. 44 — Location of A2L Sensor

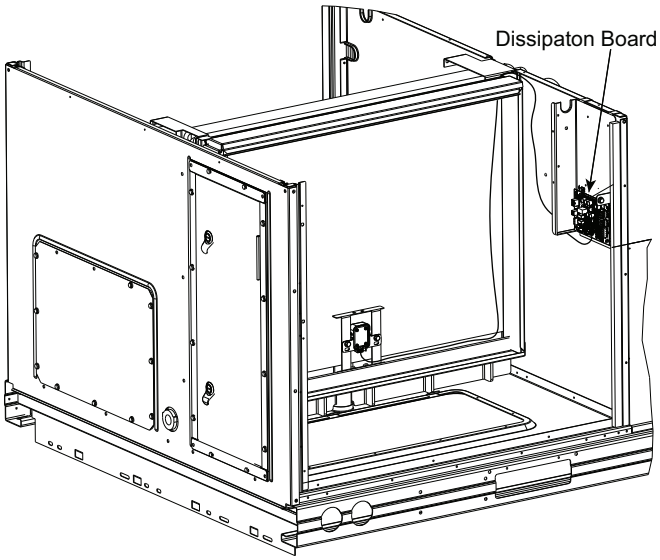

Fig. 45 — Location of Dissipation Control Board (Shown with Dust Cover Removed)

The A2L detection sensor communicates via a wiring harness to the dissipation board The sensor harness is routed on the bottom of the filter rack towards the unit bulkhead and secured with wire ties. The sensor harness then runs up the side of the filter rack and exits over the top of the rack towards the dissipation board.

NOTE: The drain wire must be properly connected to the ground lug on the dissipation board via the quick connect and ground harness. Failure of proper sensor harness grounding can lead to false dissipation events.

SEQUENCE OF OPERATION

The control functions as an R-454B refrigerant dissipation system. If the refrigerant detection sensor sends a signal indicating a refrigerant leak, the control board will prevent heating and cooling operation and begin dissipating the sensed refrigerant with a blower request. The refrigerant dissipation board will display a flash code from the yellow status LED (see Fig. 46) indicating the sensor that detected the refrigerant. See Fig. 48 — on page 28 for the full text on the Dissipation Control dust cover label.

When the sensor signal indicates the refrigerant has dissipated, the dissipation board yellow status LED will display a flash code 3 and return to its normal state and allow unit operations after a 5 minute delay.

LEAK DISSIPATION SYSTEM SELF-TEST

Power on the unit and verify proper functioning of equipment. The yellow Status LED on the dissipation board should be steady (see Fig. 46). If flash codes are present, see Troubleshooting on page 28.

NOTE: Operation of the Test Mode is only possible if no faults exist on the dissipation board.

Remove the dust cover from the Dissipation control board to access the Test button (see Fig. 47). The Test button is located above the COMM LED.

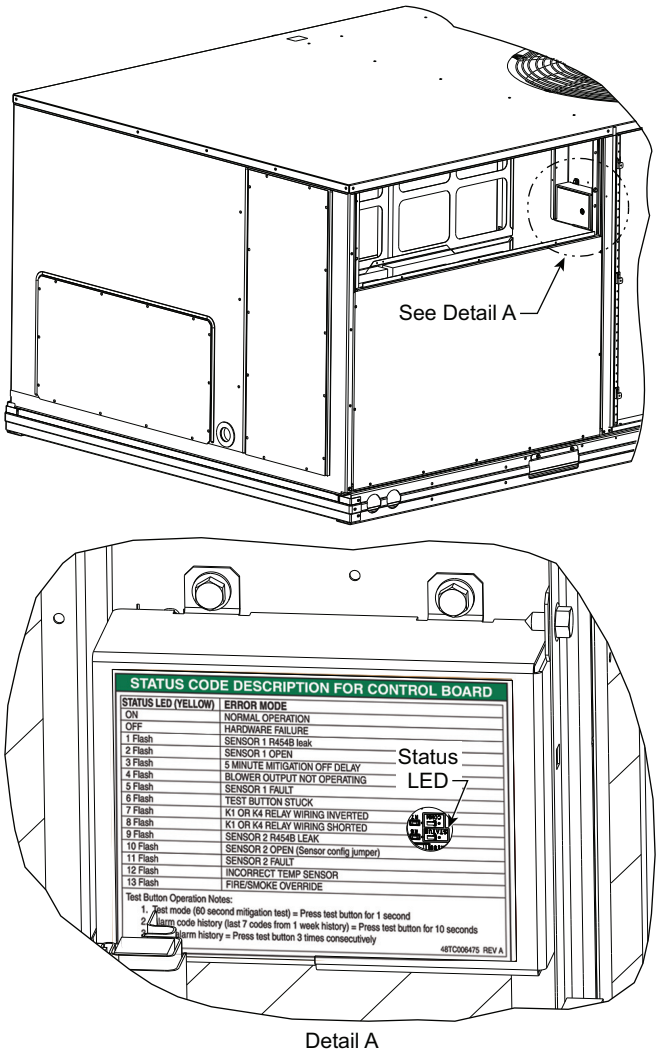

Fig. 46 — Yellow STATUS LED

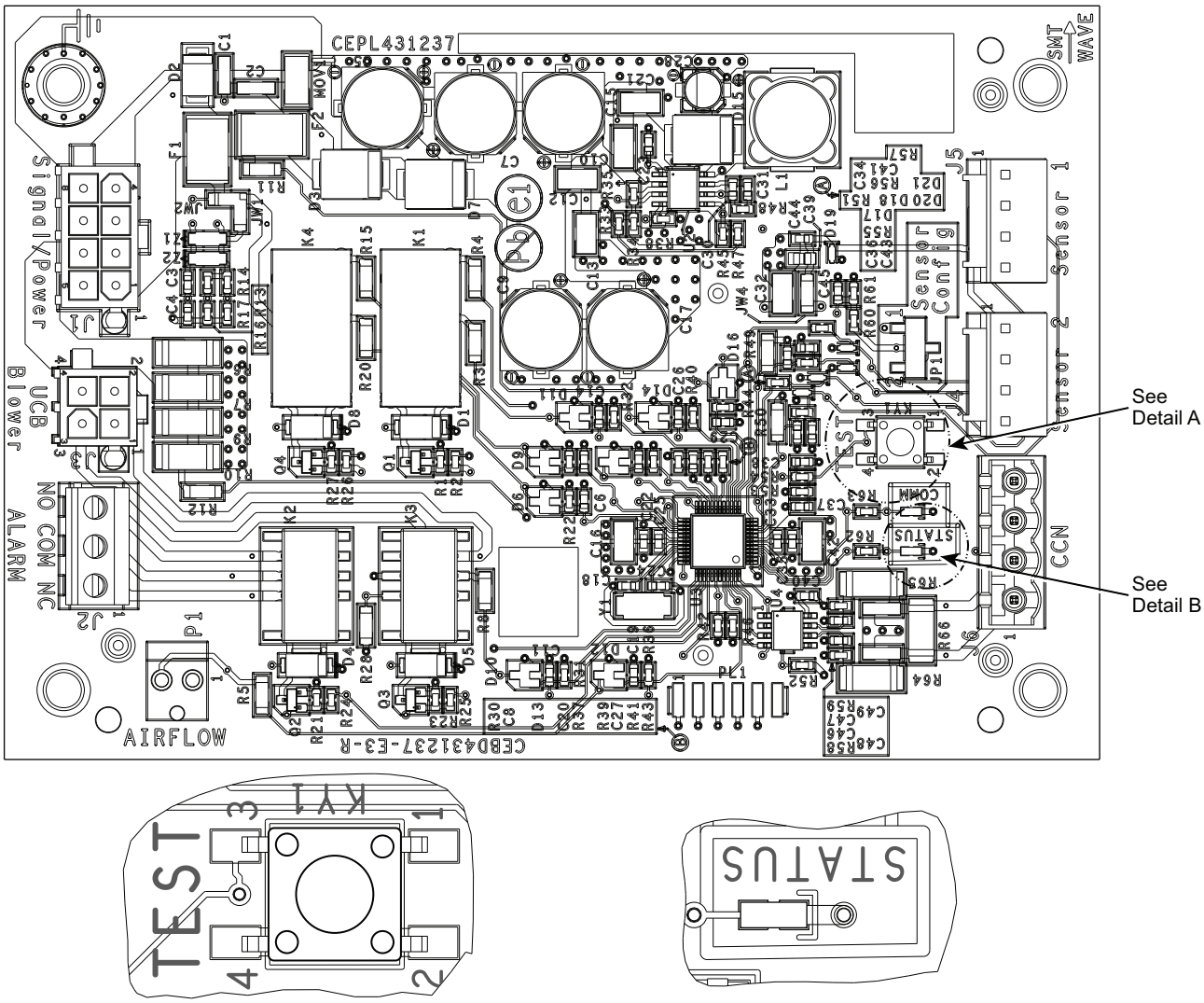

Detail A — Test Button

Detail B — Status LED

Fig. 47 — Dissipation Control Board — Shown without Dust Cover

Press the Test button on the dissipation system control board to ensure proper dissipation system operation under each test condition listed below. After pressing the Test button, system will enter Dissipation Mode for 60 seconds to help verify correct operation.

IMPORTANT: Press the Test button for roughly ONE SECOND to enter Test Mode. Pressing the Test button for a longer periods enables different functions (see Table 5).

Table 5 — Dissipation Board Test Button Functions

HOLD BUTTON TIME (SEC)	FUNCTION
1-4	Dissipation Mode for 60 seconds
5-29	Display flash code history
30+	Flash code 6
3 Rapid Presses	Clear flash code history

Ensure that the unit is able to meet the minimum required dissipation mode airflows. These required minimum airflow rates during Dissipation Mode are listed in Table 6. They are based on the total system refrigerant charge quantity.

Table 6 — Minimum Dissipation Air Flows

MINIMUM DISSIPATION AIR FLOW (cfm)	
UNIT	**cfm**
50FE*M08	280
50FE*M09	290
50FE*M12	390
50FE*N08	360
50FE*N09	480
50FE*N12	590

Table 7 details the required operational checks to ensure proper dissipation system function.

Table 7 — Dissipation System Required Operational Checks

NORMAL OPERATION				
TEST NO.	UNIT DEMAND	COMPRESSOR	INDOOR FAN	ELECTRIC/ GAS HEAT
1	None	Off	Off	Off
2	Cool	On	On	Off
3	Heat	On	On	On
DISSIPATION ACTIVATED				
4	None	Off	On	Off
5	Cool	Off	On	Off
6	Heat	Off	On	Off

Figure 48 shows the flash codes displayed on the Dissipation control board.

TROUBLESHOOTING

For all flash codes, first try power cycling the system to remove the code.

No Power

Verify the wiring to/from pins 1 and 8 on the power harness plug. Check the 24V system wiring from the transformer.

See Table 8 for details on the operating status and troubleshooting of the Dissipation system for the various flash codes.

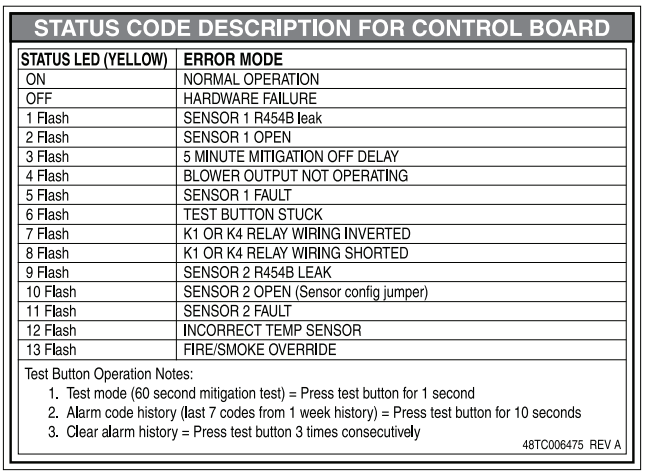

STATUS CODE DESCRIPTION FOR CONTROL BOARD

STATUS LED (YELLOW)	ERROR MODE
ON	NORMAL OPERATION
OFF	HARDWARE FAILURE
1 Flash	SENSOR 1 R454B leak
2 Flash	SENSOR 1 OPEN
3 Flash	5 MINUTE MITIGATION OFF DELAY
4 Flash	BLOWER OUTPUT NOT OPERATING
5 Flash	SENSOR 1 FAULT
6 Flash	TEST BUTTON STUCK
7 Flash	K1 OR K4 RELAY WIRING INVERTED
8 Flash	K1 OR K4 RELAY WIRING SHORTED
9 Flash	SENSOR 2 R454B LEAK
10 Flash	SENSOR 2 OPEN (Sensor config jumper)
11 Flash	SENSOR 2 FAULT
12 Flash	INCORRECT TEMP SENSOR
13 Flash	FIRE/SMOKE OVERRIDE

Test Button Operation Notes:
1. Test mode (60 second mitigation test) = Press test button for 1 second
2. Alarm code history (last 7 codes from 1 week history) = Press test button for 10 seconds
3. Clear alarm history = Press test button 3 times consecutively

48TC006475 REV A

Fig. 48 — Dissipation Control Cover Label

Table 8 — Status LED Troubleshooting Table

STATUS LED	REASON	CONTROL VERBIAGE	MODE
1 Flash	Sensor 1 ≥ 20% LFL	REFRIG DISSIPATION ACTIVE	Dissipation in Process
2 Flash	Sensor 1 Open	REFRIG SENSOR OPEN	Dissipation in Process
3 Flash	5 Minute Blower Operating, Sensor < 20% LFL and sensors are not opened (done after fault 1, 2, 9 and 10)	DISSIPATION OFF DELAY ACTIVE	Dissipation in Process
4 Flash	0 VAC sensed on G output.	BLOWER OUTPUT NOT OPERATING	Dissipation in Process
5 Flash	Fault with the A2L digital sensor	REFRIG SENSOR FAULT	Dissipation in Process
6 Flash	If KY1 is stuck pressed for more than 30 seconds.	TEST BUTTON STUCK	To prevent a shorted KY1 to keep the dissipation running continuously.
7 Flash	Y out switched with Y in or W out switched with W in	Y (K4) OR W (K1) WIRING INVERTED	Normal mode
8 Flash	Y or W shorted (relay detects both sides are high)	Y (K4) OR W (K1) OUTPUT SHORTED TO Y (K4) OR W (K1) INPUT	Normal mode
9 Flash[a]	Sensor 2 ≥ 20% LFL	SENSOR 2 DISSIPATION ACTIVE	Dissipation in Process
10 Flash[a]	Sensor 2 Open	SENSOR 2 OPEN	Dissipation in Process
11 Flash[a]	Fault with the second A2L digital sensor	SENSOR 2 FAULT	Dissipation in Process
12 Flash	High temperature sensor attached on commercial	OVERCURRENT INCORRECT SENSOR	Normal mode
13 Flash	G input signal is lost. Indicates another unit safety will override dissipation.	EXT SAFETY OVERRIDE	Normal mode

NOTE(S):

a. There is only one sensor mounted in these units. This table represents the standard label being put on all commercial equipment. The hardware changes only allow one sensor to be connected to the board; the software remains the same for a one or two sensor board. Although unlikely these flash codes may appear if the board malfunctions.

LEGEND

LFL — Lower Flammable Limit

EconomizerONE (Factory Option)

ECONOMIZER SETTINGS

Interface Overview

EconomizerONE

This option consists of the following:

- Low Leak Economizer Assembly
- HH79NZ039 OA (Outdoor Air) Dry Bulb Sensor
- HH79NZ039 Mixed Air Sensor
- POL224 Controller
- 48TC005897 Harness

POL224 Economizer Module Wiring

The economizer controller used on electromechanical units is a Siemens POL224, which is to be located in the RTU base unit's control box. See Fig. 49 for button description of the POL224 controller. Refer to the unit dimensional drawing for the location of the control box access panel.

The POL224 controller provides the following:

1. One-line LCD (Liquid Crystal Display) — After a period of inactivity, the controller displays the default HMI (Human Machine Interface) screen (free cooling status, 1FREE-COOL YES or 1FREE COOL NO). See Fig. 49-53.
2. Operation button (Up button) — Move to the previous value, step, or category.
3. Operation button (Down Button) — Move to the next value, step, or category.
4. Operation Button (Enter Button):
   a. Press Enter to edit the current value or option.
   b. Press Enter to confirm a newly selected value or option.
   c. Press Enter + Up to jump up one entire category.
   d. Press Enter + Down to jump down one entire category.

User Interface and Keypad

The controller user interface consists of an LCD display and a 3-button keypad for input. The LCD is a 16 character by 1-line dot matrix display. The keypad is used to navigate and change the desired menu items on the display. See Fig. 49.

The Climatix™[1] mobile application allows for installation, commissioning, and servicing. Scanning a QR code on the controller allows users to download the mobile application on Android™[1] or Apple iOS®[1], but a Wi-Fi/WLAN stick is needed. See Fig. 49 and 50. Plug Wi-Fi/WLAN stick into controller USB port for temporary connection for mobile application setup. The Wi-Fi/WLAN stick can be used for multiple units.

Menu Structure

Menus are displayed in the economizer controller via categories. There are eight first-level menus, each of which is represented by a number at the beginning of the line on the LCD. Pressing Enter + Up or Down can toggle between different first-level menus. Submenus follow the numbered first-level menus closely. Pressing Up or Down can toggle between different submenus.

At the end of the line, the LCD displays the value of the current submenu (if any). If the value is editable, pressing Enter will put the terminal in Edit mode. The value is then highlighted for change. After making a change by pressing Up or Down, press Enter to confirm the change and exit the Edit mode. See Fig. 52.

Powering the Economizer Controller

The POL224 controller power connections are made through the economizer harness (P/N 48TC005897). Connections from the harness are made to the C (24 vac common) and R (24 vac power) terminals of the economizer controller. See Fig. 51.

LED Indication

NOTE: If different faulty events occur at the same time, then sensor/DAC LED lights up following the priority below: Red → Yellow → Off. For example, if there is a humidity sensor error and air temperature failure at the same time, then the sensor LED turns red rather than yellow. See Fig. 53 and Table 9.

IMPORTANT: After the Economizer controller enters the running state, it may take one minute for peripheral devices to complete initialization. Before that, LED indication might be unstable.

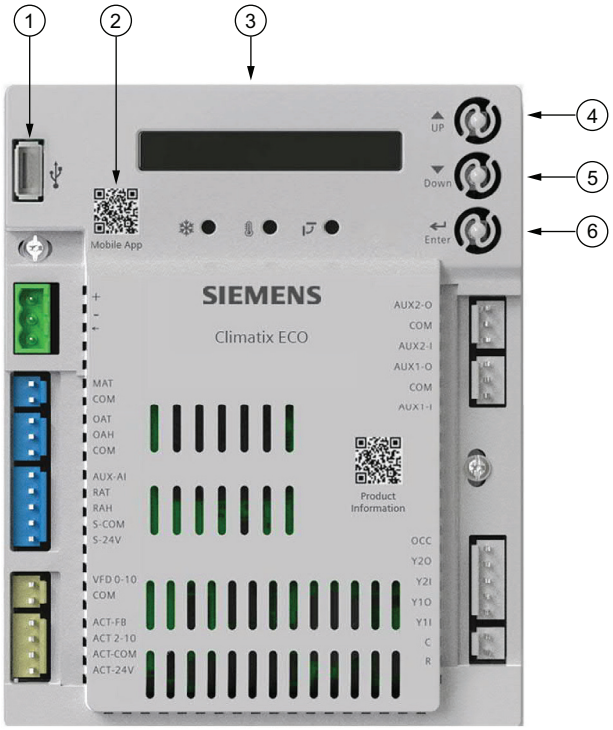

NOTE: QR codes in this image are for reference only.

NO.	DESCRIPTION
1	USB port for Wi-Fi/WLAN stick.
2	QR code to download Climatix™ mobile application.
3	One-line LCD. After a period of inactivity, the controller displays the default: HMI screen (free cooling status, 1FREECOOL YES or 1FREECOOL NO)
4	Operation button (Up button) - Move to the previous value, step or category.
5	Operation button (Down button) - Move to the next value, step or category.
6	Operation button (Enter button): • Press to edit the current value or option. • Press to confirm a newly selected value or option. • Press Enter + Up to jump up one entire category. • Press Enter + Down to jump down one entire category.

Fig. 49 — POL224 Controller

NOTE: QR codes in this image are for reference only.

Fig. 50 — Wi-Fi/WLAN Stick

1. Third-party trademarks and logos are the property of their respective owners.

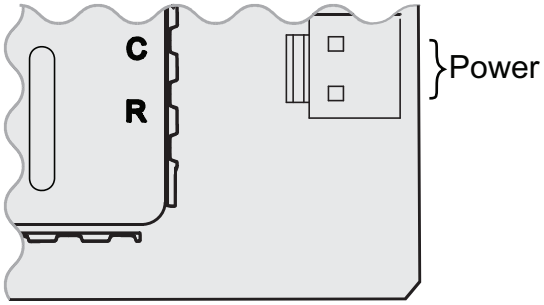

Fig. 51 — Powering the EconomizerONE Controller

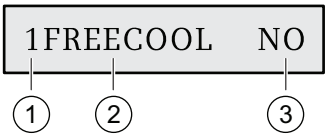

No.	Description
1	Number representing the first-level menu of **Status Display**. Different numbers represent different menus: 1: Status Display 2: Basic Settings 3: Advanced Settings 4: Alarms 5: Enter Configuration State and Reset 6: I/O Config 7: Testing 8: Enter Running State
2	Submenu*
3	Value of the current submenu*

*See "Setup and Configuration" on page 39 for detailed submenus together with possible values or ranges.

Fig. 52 — Menu Structure Descriptions

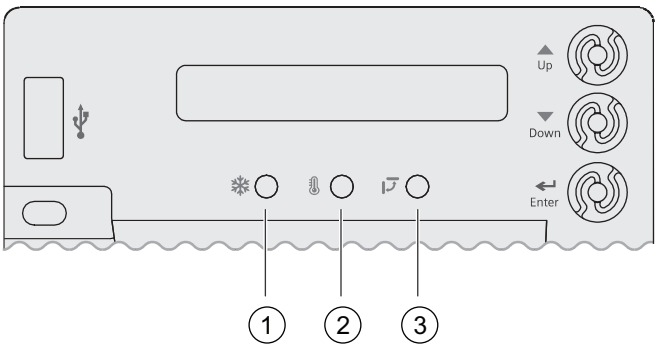

NO.	DESCRIPTION
1	Free Cooling LED
2	Sensor LED
3	DAC LED

Fig. 53 — LED Indication

Table 9 — LED Indication

STATUS	FREE COOLING LED	SENSOR LED	DAC LED
Commissioning mode	Yellow Blinking	Yellow Blinking	Yellow Blinking
Power start up	Yellow On	Yellow On	Yellow On
Free cooling is running	Green On	—	—
Free cooling is available but not running	Green Blinking	—	—
Not economizing when it should	Red Blinking	—	—
Economizing when it should not	Red On	—	—
Sensor working okay	—	Green On	—
Humidity sensor error	—	Yellow On	—
CO_2 sensor error	—	LED Off	—
Air temperature fault/failure	—	Red On	—
Excess outdoor air	—	Red Blinking	—
Damper working okay	—	—	Green On
Damper not modulating	—	—	Red On
Damper slippage	—	—	Red Blinking
Damper unplugged	—	—	Fast Red Blinking
Terminal ACT-FB is configured but no available feedback signal	—	—	LED Off

Functions

Free Cooling Economizing

Free cooling uses unconditioned outside air to cool the space directly. The economizer controller enables or disables free cooling after it judges which control mode is active. It also uses hysteresis to ensure a smooth switchover.

Depending on the sensors that are used, there are four different control modes. In different control modes, the assessed conditions are different. See Table 10.

Default Hysteresis Setting

Hysteresis setting (DB) defaults to 2°F (–17°C). See Fig. 54.

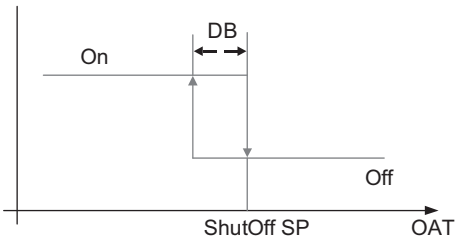

LEGEND
OAT — Outside Air Temperature
DB — Deadband
SP — Set Point

Fig. 54 — Hysteresis Settings

Table 10 — Free Cooling Functions

CONTROL MODE	SENSORS USED	ENABLE FREE COOLING?
Control Mode 1 • Fixed Dry bulb	OA (outside air) temperature sensor and MA (Mixed Air) temperature sensor	The outside air dry bulb temperature is compared with the set temperature shutoff setpoint. If the outside air dry bulb temperature is below the temperature shutoff setpoint, then the outside air is used to meet all or part of the cooling demand.
Control Mode 2 • Differential Dry bulb (Dual Dry bulbs)	OA temperature sensor, RA (Return Air) temperature sensor and MA temperature sensor	The outside-air dry bulb temperature is compared with the return air dry bulb temperature. If both OAT and RAT are higher than the temperature high limitation, then free cooling is prohibited. If OAT or RAT is lower than the temperature high limitation and the outside air dry bulb temperature is lower than the return air dry-bulb temperature, then the outside air is used to meet all or part of the cooling demand.
Control Mode 3 • Combination Fixed Enthalpy and Fixed Dry bulb Control	OA temperature and humidity sensor, and MA temperature sensor	The outside air dry bulb temperature and enthalpy are compared with the set temperature and enthalpy shutoff setpoints. If the outside air enthalpy is lower than the set enthalpy shutoff setpoint, and the outside air dry bulb temperature is lower than the temperature shutoff setpoint, then the outside air can be used for economizing.
Control Mode 4 • Combination of Differential Enthalpy and Fixed Dry bulb	OA temperature and humidity sensor, RA temperature and humidity sensor, and MA temperature sensor	The outside air dry bulb temperature and enthalpy are compared with the temperature shutoff setpoint and return air enthalpy. If both OA enthalpy and RA enthalpy are higher than the enthalpy high limitation, then free cooling is prohibited. If OA enthalpy or RA enthalpy is lower than the enthalpy high limitation, outside air enthalpy is lower than the return-air enthalpy, and the outside air dry bulb temperature is lower than the set temperature shutoff setpoint, then outside air can be used for economizing.

Damper Modulation During Free Cooling

Once outside air is suitable for free cooling, the controller modulates the damper based on MAT (mixed air temperature, default) or OAT (outside air temperature). Refer to Table 10.

If MAT is used when free cooling is enabled, MAT setpoint (**3MAT SET**, configurable in "Parameter Settings — Advanced" on page 42) is used for MAT modulating. When MAT falls below the anti-freeze setpoint (**3FRZ PROT**), the damper either fully closes or opens to the minimum position (configurable in "Parameter Settings — Advanced" on page 42).

1. If MAT is lower than MAT setpoint, then the damper is modulated to maintain MAT setpoint, towards fully closed or open to the minimum position based on occupancy status if MAT continues dropping.
2. If MAT is in the range [MAT setpoint, (MAT setpoint + neutral zone band [1°F by default])], then the damper position does not change.
3. If MAT is higher than (MAT setpoint + neutral zone band), then the damper opens towards fully open.
4. If MAT is 10°F higher than MAT setpoint, then the damper fully opens to 100%.

If OAT is used when there is a cooling demand, the damper can be opened to different positions depending on different outside air temperatures:

1. If outside air is higher than 50°F but lower than the temperature shutoff setpoint, then the damper is fully open.
2. If outside air is higher than OAT lockout setpoint but lower than 50°F, then linear modulation is applied when only Cooling Stage 1 input (Y1I) is ON. Result of the following formula indicates the damper's open position:

   ([OAT - OAT Lockout Setpoint] / [50 - OAT Lockout Setpoint]) * (80% - MIN POS) + MIN POS

   NOTE: When both free cooling and mechanical cooling are on, damper remains fully open regardless of the modulating logic.

Location-Based Shutoff Setpoints

The economizer controller can get location-based temperature and enthalpy shutoff setpoints automatically if it is connected to the Climatix™ mobile application. Once a Wi-Fi/WLAN stick is plugged in, the economizer controller can establish network connection with the mobile application. The temperature and enthalpy shutoff setpoints obtained via the phone or tablet's GPS functionality can then be synchronized to the economizer controller.

Cooling Stage Operation

The economizer controller accepts inputs for 1 and 2-stage cooling inputs and reroutes to the RTU through the relay connection Y1 and Y2.

The operation of the cooling stages is determined by the availability of Free Cooling provided by the economizer operation mode. See Cooling Stage I/O Logic Tables 11-12. Based on the use of Free Cooling, the operating modes are as follows:

- Y1 is Stage 1 Cooling Demand.
- Y2 is Stage 2 Cooling Demand.
- Free Cooling is always the first cooling stage.
- Cooling Stage 1 call from the Commercial Thermostat (Y1) energizes the Y1 input to the economizer controller.
- Cooling Stage 2 call from the Commercial Thermostat (Y2) energizes the Y2 input to the economizer controller.

Table 11 — 1 and 2-Stage Cooling Stage I/O Logic

ECONOMIZER CONDITION MET	Y1	Y2	COOLING STAGE 1	COOLING STAGE 2
NO	On	On	On	On
NO	On	Off	On	Off
NO	Off	Off	Off	Off
YES	On	On	On	On/Off[a]
YES	On	Off	Off	Off
YES	Off	Off	Off	Off

NOTE(S):

a. If OAT ≤ MAT setpoint (3MAT SET), then Relay 2 is always **OFF** to disable Cooling Stage 2. Otherwise, if both stages of cooling (Y1 and Y2) are **ON** for more than a set time (15 minutes by default), Y2 remains ON, and the OAT is higher than MAT setpoint, then Relay 2 energizes to allow Y2 pass-through to enable Cooling Stage 2.

Table 12 — 2-Stage Cooling Stage I/O Logic

ECONOMIZER CONDITION MET	Y1	Y2	COOLING STAGE 1	COOLING STAGE 2
NO	On	On	On	On
NO	On	On	On	On
NO	On	Off	On	Off
NO	Off	Off	Off	Off
YES	On	On	On	On
YES	On	On	On	On/Off
YES	On	Off	Off	Off
YES	Off	Off	Off	Off

IMPORTANT: The economizer controller can tolerate thermostat wiring mismatch, e.g. Thermostat Y1 → Economizer Y2-In, Thermostat Y2 → Economizer Y1-In. The handling logic is Stage =Y1I + Y2I. For example, Y1O =1 if Stage > =1, Y2O =1 if Stage > = 2.

Multi-Speed Fan Support

The economizer controller supports connection to 2-speed fans. When the unit is equipped with a multi-speed fan, the damper responds to multiple fan speeds via multiple minimum positions **(MIN POS)** to keep minimum airflow. See Tables 13-15.

Table 13 — Damper MIN POS for 2-Speed Fan[a]

Y1	Y2	W1 OR O/B	SPD L	SPD H	POS L	POS H
X	**—**	—	X	—	X	—
X	**X**	—	—	X	—	X
—	**—**	X	—	X	—	X

NOTE(S):

a. A multi-speed fan is not controlled by the economizer controller but by an external logic board.

LEGEND

POS L — Damper MIN POS for Low-Speed Fan
POS H — Damper MIN POS for High-Speed Fan
SPD L — Low-Speed (Fan)
SPD H — High-Speed (Fan)

Table 14 — Different Fan Speeds with Different Configured Outputs[a]

FAN TYPE	1-SPEED COOLING[b]	2-STAGE COOLING[b]
1-SPEED FAN[c]	• Spd H (regardless of cooling demand, OCC=Yes)	• Spd H (regardless of cooling demand, OCC=Yes)
2-SPEED FAN[c]	• Spd L (0 or 1 cooling demand) • Spd H (2 cooling demands)	• Spd L (0 or 1 cooling demand) • Spd H (2 cooling demands)

NOTE(S):

a. If a single-speed fan connects to the Controller, it opens directly on the call of cooling/heating. The damper position is Pos H.
b. Configured by Y1O or Y2O.
c. Configured by 6FAN.

LEGEND

Spd L — Low Speed (Fan)
Spd H — High Speed (Fan)

Table 15 — Different Damper Minimum Positions with Different Configured Outputs

FAN TYPE	1-SPEED COOLING[a]	2-STAGE COOLING[b]
1-SPEED FAN[b]	• Pos H (regardless of cooling demand, OCC=Yes)	• Pos H (regardless of cooling demand, OCC=Yes)
2-SPEED FAN[b]	• Pos H (regardless of cooling demand, OCC=Yes)	• Pos L (0 or 1 cooling demand) • Pos H (2 cooling demands)

NOTE(S):

a. Configured by Y1O or Y2O.
b. Configured by 6FAN.

LEGEND

Pos L — Damper MIN POS for Low-Speed Fan
Pos H — Damper MIN POS for High-Speed Fan

If DCV (demand controlled ventilation) is enabled, each fan speed corresponds to two damper position ventilation setpoints (VENT MIN, VENT MAX), e.g., Pos L corresponds to 2VENTMIN L... 2VENTMAX L. See Table 16 for Different Damper Position Setting with Different Configured Outputs with DCV enabled.

If CO_2 sensor is connected but DCV is disabled, then each fan speed corresponds to one minimum damper position ventilation setpoint. See Table 17 for Different Damper Position Setting with Different Configured Outputs with DCV disabled.

Table 16 — Different Damper Position Settings with Different Configured Outputs (DCV is Enabled)

FAN TYPE	1-STAGE COOLING[a]	2-STAGE COOLING[a]
1-SPEED FAN[b]	• 2VENTMIN H to 2VENTMAX H (regardless of cooling demand, OCC=Yes)	• 2VENTMIN H to 2VENTMAX H (regardless of cooling demand, OCC=Yes)
2-SPEED FAN[b]	• 2VENTMIN H to 2VENTMAX H (regardless of cooling demand, OCC=Yes)	• 2VENTMIN L to 2VENTMAXL (0 or 1 cooling demand) • 2VENTMIN H to 2VENTMAX H (2 cooling demands)

NOTE(S):

a. Configured by Y1O or Y2O.
b. Configured by 6FAN.

Table 17 — Different Damper Position Settings with Different Configured Outputs (DCV is Disabled, CO_2 sensor is connected)

FAN TYPE	1-STAGE COOLING[a]	2-STAGE COOLING[a]
1-SPEED FAN[b]	• 2VENTMIN H (regardless of cooling demand, OCC=Yes)	• 2VENTMIN H (regardless of cooling demand, OCC=Yes)
2-SPEED FAN[b]	• 2VENTMIN H (regardless of cooling demand, OCC=Yes)	• 2VENTMIN L (0 or 1 cooling demand) • 2VENTMIN H (2 cooling demands)

NOTE(S):

a. Configured by Y1O or Y2O.
b. Configured by 6FAN.

Cooling Delay via Increasing Fan Speed

If there is cooling demand while outside air is suitable for economizing, then the economizer controller tries to increase fan speed to maximize the use of outside air first. If the cooling demand is not reached within a set time, then mechanical cooling will be enabled.

Typical field application:

1. Prerequisites:
   - Outside air is suitable for economizing and free cooling is ON.
   - Fan connected to the controller supports multiple speeds. Cooling delay function does not work if only a one-speed fan is connected to the controller.
2. If it is a 2-speed fan and there are two cooling demand inputs/outputs and Y1-Input is called, then the controller sets fan speed to Speed Low. Damper is fully open (100%).

   If Y2-Input is also called, then the controller increases fan speed to Speed High and starts fan delay (2FAN DLY) time. After the delay time runs out, the controller starts Y1-Output.

Demand Controlled Ventilation (DCV)

If a field-installed CO_2 sensor is connected to the EconomizerONE controller, then a demand controlled ventilation strategy will operate automatically. As the CO_2 level in the space increases above the setpoint (on the EconomizerONE controller), the minimum position of the dampers will be increased proportionally until the Maximum Ventilation setting is reached. As the space CO_2 level decreases because of the increase in fresh air, the outdoor damper will follow the higher demand condition from the DCV mode or from the free cooling mode.

The controller modulates the outside air damper based on the CO_2 level through the ppm value selected between the range of 500 and 2000 ppm. The measured CO_2 concentration value is compared with the set DCV setpoint. If the measured CO_2 concentration value is below the DCV setpoint, then keep the damper to the minimum position. Otherwise, enable DCV. Once DCV is enabled, the DCV PID starts to run to control the indoor CO_2 concentration value towards the DCV setpoint. The damper opens to the maximum position.

NOTE: DCV is disabled if the controller receives no occupancy signal.

DCV operation is available in Occupied and Unoccupied periods with the EconomizerONE system. However, a control modification will be required on the unit system to implement the Unoccupied period function. Refer to controller accessory installation instruction manual for further controls and command operation information.

High Humidity Limitation

The economizer controller applies high limit of humidity to enthalpy-based economizing. When the OA dew point is below the dew point setpoint, enthalpy-based economizing is available. Otherwise, enthalpy-based economizing is unavailable.

Anti-Freeze Protection

The economizer controller initiates the anti-freeze protection if MAT or OAT temperature falls below the anti-freeze setpoint.

MAT-Based Anti-Freeze Protection

1. If MAT temperature falls below the anti-freeze setpoint (3FRZ PROT), then:
   - The controller closes both damper and compressor if unit type is conventional unit and cooling/heating conventional operation mode is enabled.
   - The controller closes the damper if unit type is heat pump and heat pump operation mode is enabled.
2. If the MAT sensor fails, MAT is substituted by OAT to continue the anti-freeze assessment. If OAT fails too, the controller closes the damper immediately.

OAT-Based Anti-Freeze Protection

If OAT temperature falls below the OAT lockout setpoint (3OAT LOCK):

1. The controller stops the compressor from running if unit type is conventional unit and cooling/heating conventional operation mode is enabled.
2. The controller compressor is bypassed if unit type is heat pump and heat pump operation mode is enabled.

Exhaust Fan Operation

Up to two exhaust fans can be connected to the economizer controller.

- If Exhaust Fan 1 is connected and configured, then Exhaust Fan 1 parameter group (L, M and H) is available, depending on fan configuration.
- If Exhaust Fan 2 is connected and configured, then Exhaust Fan 2 parameter group (L, M and H) is available, depending on fan configuration.
- The controller energizes Exhaust Fan Relay 1 and Exhaust Fan Relay 2 if the damper position reaches Exhaust Fan 1 parameter setting and Exhaust Fan Relay 2 parameter setting respectively. The selection of L, M, or H matches the current fan speed.

NOTE: If terminal ACT-FB is configured, then the damper position is the damper feedback position. If feedback signal is unavailable, it is the simulated position.

Occupancy Input

The economizer controller can receive an occupancy signal from the connected thermostat or work under Occupied mode all the time. This is configurable in the Thermostat setup from the Climatix™ mobile application or under the I/O Configuration menu on the inbuilt display. See "Parameter Settings — I/O Configurations" on page 42 for more information.

IMPORTANT: On the call of cooling, when the controller is configured to receive signal from the thermostat but the thermostat is working under the Unoccupied mode, the damper is fully closed if outside air is not suitable for economizing. If outside air is suitable for economizing, the damper is fully open.

Pre-occupancy Purge

The pre-occupancy purge demand comes from the configuration of the Auxiliary features in the Climatix™ mobile application or 6AUX2-I under the I/O Configuration menu on the inbuilt display.

During pre-occupancy purge on the call of heating or when there is no cooling/heating demand, the damper position is MIN POS.

During pre-occupancy purge on the call of cooling, the damper position is MIN POS if outside air is not suitable for economizing. If outside air is suitable for economizing, then the damper is fully open.

Airflow Commissioning

Airflow measurement station (differential pressure signal) can connect to the controller temporarily to run airflow commissioning to calculate, calibrate, and store 4 fan speed characteristic curves automatically at damper positions 40%, 60%, 80%, and 100%. The controller places the damper to a proper position to meet minimum or any other airflow requests in cfm. Users can enable this function only from the Climatix™ mobile application if the related function is available in the current mobile application version.

Fault Detection and Diagnostics

The economizer controller can detect and diagnose free cooling faults, sensor operation faults, and damper modulating faults. It can also report anti-freeze and shutdown notifications and actuator errors. Following is a list of all detectable or reportable information:

- Sensor disconnected or has no signal.
- Sensor short or high signal (under range or over range).
- Not economizing.
- Unexpected economizing.
- Excess outdoor air.
- Damper not modulating.
- Input power monitor and brownout. After detecting brownout, the economizer controller enters the brownout protection mode and disables all of the relay outputs.
- Anti-freeze notifications.
- Shutdown notifications.
- Actuator errors.
- Too low or too high leaving air temperature.
- Cooling/heating error.
- Damper actuator cycle count. Parameter **1ACT CNT** indicates number of times actuator has cycled. It is resettable via HMI item **8ACT CNT RESET**.

IMPORTANT: The first 6 faults are detectable via LEDs or alarm reports on the LCD. See LED Indication on page 30 and Alarms on page 43 for fault indications. These faults can also be displayed in the Operating section of the Climatix™ mobile application.

Firmware Update

NOTE: Back up configurations before firmware update. All the previous configuration data are erased after firmware update. NOTE: Contact Application Engineering for more information on support for firmware.

IMPORTANT: If the controller enters the configuration state for the convenience of I/O configurations, then users can manually switch to the running state after finishing configurations. To do so, press Enter + Up at the same time, and then press Enter to confirm the switch after 8RUN STATE appears on the LCD.

⚠ WARNING

Failure to follow this caution may result in damage to equipment. Be sure to allow enough time for compressor startup and shutdown between checkout tests so that the compressors do not short-cycle.

Mounting Devices Connected to the Economizer Controller

Devices like damper actuators, sensors (temperature sensor, humidity sensor, combination temperature and humidity sensor, CO_2 sensor), thermostats, and exhaust fans can be connected to the economizer controller. For information on how to mount the devices, see the device's installation instructions. See Fig. 55 and Table 18 for economizer controller wiring details.

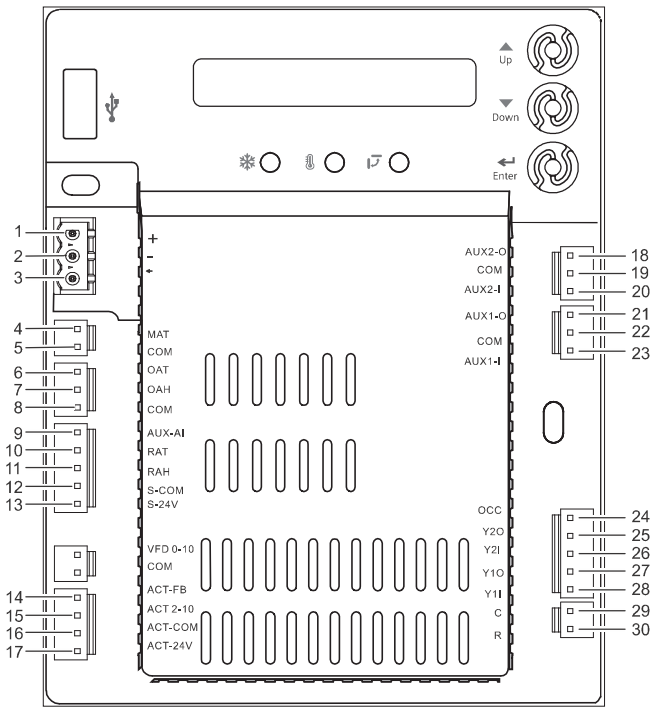

Fig. 55 — EconomizerONE Control Wiring

Table 18 — EconomizerONE Control Wiring Settings

NO.	LABEL	TYPE	DESCRIPTION
1	+	RS485 Modbus A	Line A
2	-	RS485 Modbus B	Line B
3	¬	GND_ISO	Earth Ground
4	MAT	Type II NTC 10K or 0-10 vdc	Mixed or Discharge Air Temperature Sensor
5	COM	COM	Mixed or Discharge Air Temperature Sensor Common
6	OAT	Type II NTC 10K or 0-10 vdc	Outside Air Temperature Sensor
7	OAH	0-10 vdc or 4-20mA	Outside Air Relative Humidity Sensor
8	COM	COM	Outside Air Temperature Sensor or Outside Air Relative Humidity Sensor Common
9	AUX-AI	0-10 vdc, 2-10 vdc or 0-5 vdc	Air Quality Sensor or Pressure Sensor
10	RAT	Type II NTC 10K or 0-10 vdc	Return Air Temperature Sensor
11	RAH	0-10 vdc or 4-20mA	Return Air Relative Humidity Sensor
12	S-COM	COM	24 vac Common
13	S-24V	24 vac	24 vac Power Out to Sensors
14	ACT-FB	2-10 vdc	Damper Actuator Feedback
15	ACT2-10	2-10 vdc	Damper Actuator Output
16	ACT-COM	COM	Damper Actuator Output Common
17	ACT-24V	24 vac	24 vac Power Out to Damper Actuator
18	AUX2-O	24 vac OUT	Configurable: • Exhaust Fan (1 or 2) • System Alarm output (Title 24)
19	COM	COM	24 vac Common
20	AUX2-I	24 vac IN	Configurable: • Shut Down • Heat Conventional (W1) • Heat Pump Changeover (reversing valve OB) • Pre-occupancy
21	AUX1-O	24 vac OUT	Configurable: • Exhaust Fan (1 or 2) • System Alarm output (Title 24)
22	COM	COM	24 vac Common
23	AUX1-I	24 vac IN	Configurable: • Shut Down • Heat Conventional (W1) • Heat Pump Changeover (reversing valve OB) • Pre-occupancy
24	OCC	24 vac IN	Occupancy Input
25	Y2O	24 vac OUT	Cooling Stage 2 Output to Stage 2 Mechanical Cooling
26	Y2I	24 vac IN	Cooling Stage 2 Input from Commercial Thermostat
27	Y1O	24 vac OUT	Cooling Stage 1 Output to Stage 1 Mechanical Cooling
28	Y1I	24 vac IN	Cooling Stage 1 Input from Commercial Thermostat
29	C	COM	24 vac Common
30	R	24 vac	24 vac Power

Connecting Peripheral Devices to the Economizer Controller

See Fig. 56-60 for wiring details.

- Outside Air: Connect to the OAT and COM terminals of the device.
- Return Air (Differential): Connect to the RAT and S-COM terminals of the device.
- Mixed Air: Connect to the MAT and COM terminals of the device.

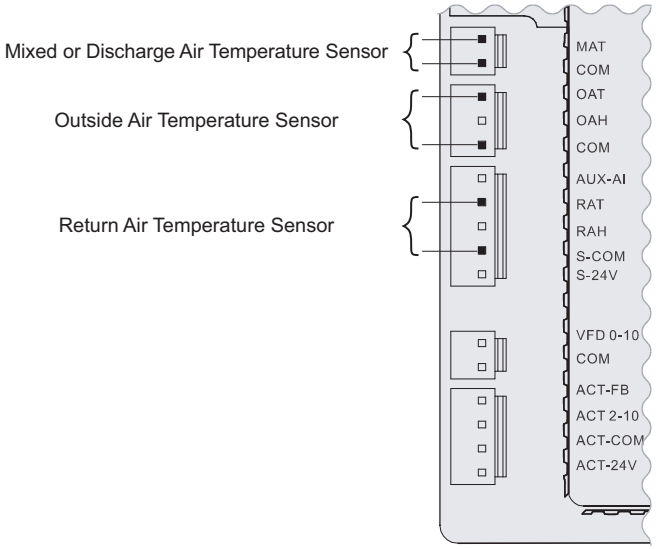

Fig. 56 — Temperature Sensor Connection

- Outside Air Relative Humidity: Connect to the OAH and COM terminals of the device.
- Return Air Relative Humidity: Connect to the RAH and S-COM terminals of the device.

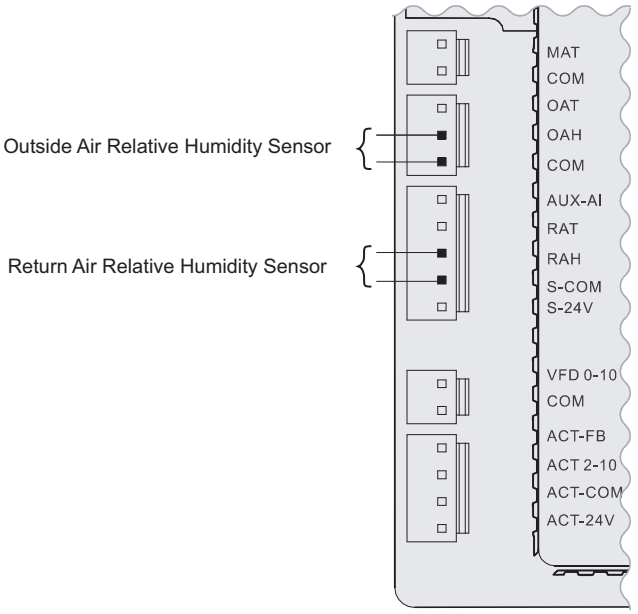

Fig. 57 — Relative Humidity Sensor Connection

- Outside Combination Temperature/ Humidity: Connect to the OAT, COM, and OAH terminals of the device.
- Return Combination Temperature/ Humidity: Connect to the RAT, S-COM, and RAH terminals of the device.

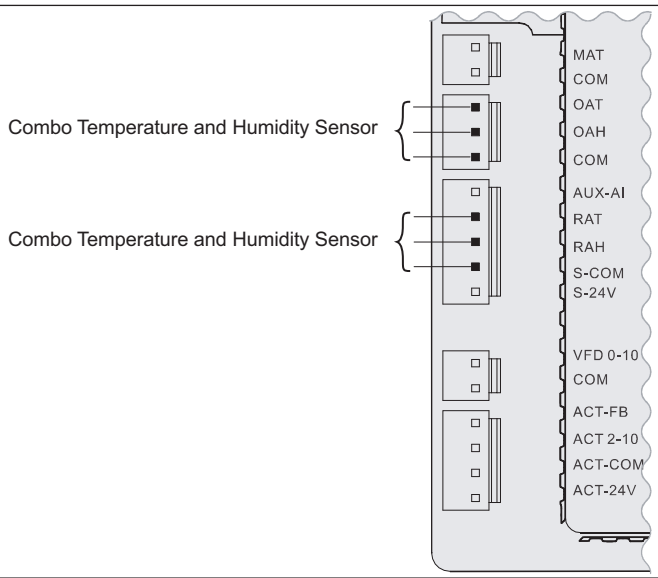

Fig. 58 — Combination Temperature/Humidity Sensor Connection

- Connect to the AUX-AI, S-COM, and S-24V terminals of the device.

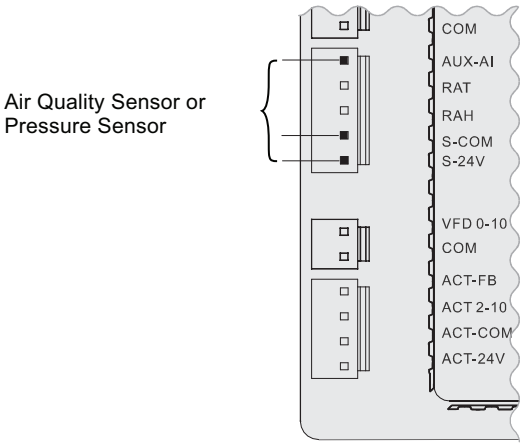

Fig. 59 — CO_2/Pressure Sensor Connection

- Connect to the ACT 2-10, ACT-COM, and ACT-24V terminals of the device.

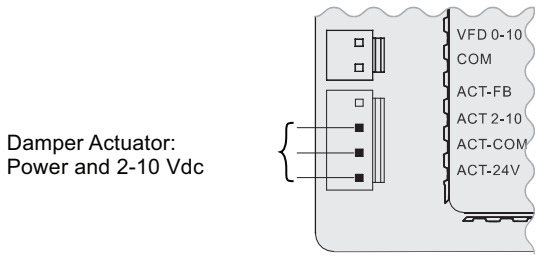

Fig. 60 — Damper Actuator Connection

SETUP AND CONFIGURATION

IMPORTANT: Before setup and configuration, it is recommended to obtain some location-based values, such as shutoff points, or utilize the location services in the Climatix™ mobile application.

Set up and configure the economizer controller before putting it into usage. This can be accomplished by using the Climatix™ mobile application or the inbuilt display. After sensor, compressor, thermostat, or actuator is connected to the economizer controller, values/statuses are displayed in the Operating section of the mobile application and on the LCD. Users can manually change basic and advanced settings, configure I/Os, and test the damper operation and any configured outputs by modifying the corresponding parameter values in the local device or mobile application. See Tables 19-26 for complete list of all parameters available on the LCD display. Refer to it during the setup and configuration process.

NOTE: For all units, the Climatix application login is: **Administrator**. For units coming from the factory with CO_2 configuration or single enthalpy (control mode 3), the controller password is OneBT2.1. For all other units, use the controller password OneBT.

NOTE: Parameters and display menus may display differently/dynamically if different applications are configured. See Tables 19-26.

IMPORTANT: Not all operations are available on the local POL224. For example, users can only obtain shutoff setpoints and perform cfm commissioning via the Climatix™ mobile application. Setup and configuration on the local device are only recommended if operations from the mobile application are unavailable. Check the mobile application for all operations that can be performed from the mobile application end.

IMPORTANT: By connecting the RS485 port to a PC, all parameters are also readable or writable from PC tools such as Modbus Poll.exe via Modbus®[a] and Yabe.exe via BACnet™[a] MSTP (Bps 38400 [default], Bps 9600, Bps 19200, Bps 115200). Note that an external End of Line (EOL) element is required to achieve Baud Rate 115200 at a maximum cable length of 4000 ft (1.2 km).

NOTE(S):

a. Third-party trademarks and logos are the property of their respective owners.

Table 19 — Status Display

PARAMETER	DESCRIPTION	VALUE
1FREECOOL	Indicates whether the system can use outdoor air for free cooling.	YES NO
1ECON ENAB	Indicates whether outdoor air is being used for the first stage of cooling.	
1OCCUPIED	Indicates whether the space is occupied. If users choose **ALWAYS** for **6OCC** when configuring I/Os, then the parameter value is **YES**; if users keep the default selection **T-STAT** for **6OCC** and the controller receives 24-v signal from OCC input, then the value is **YES**. Otherwise, the value is **NO**.	
1Y1-IN	Y1-In call from thermostat for Cooling Stage 1.	ON OFF
1Y1-OUT	Y1-Out signal to compressor for Cooling Stage 1.	
1Y2-IN	Y2-In call from thermostat for Cooling Stage 2.	
1Y2-OUT	Y2-Out signal to compressor for Cooling Stage 2. **Dynamic item:** Appears only if Y2-Out terminal is configured.	
1AUX1-I	Aux1-In signal **Dynamic item:** Appears only if Aux1-In terminal is configured.	
1AUX1-O	Aux1-Out signal **Dynamic item:** Appears only if Aux1-Out terminal is configured.	
1AUX2-I	Aux2-In signal **Dynamic item:** Appears only if Aux2-In terminal is configured.	
1AUX2-O	Aux2-Out signal **Dynamic item:** Appears only if Aux2-Out terminal is configured.	
1COMP STAGE	Indicates compressor current stage.	Off 1 2 3
1HEAT ENAB	Indicates whether heating is enabled.	YES NO
1MIX AIR LOW	Indicates whether the anti-freeze protection function is enabled for a mixed air temperature sensor. If the detected air temperature is lower than the anti-freeze protection setpoint (3FRZ PROT), then the parameter value is **YES**. Otherwise, it is **NO**.	
1MAT PRES	Indicates the present value of the mixed air temperature (MAT) sensor. **Dynamic item:** Appears only if **MAT** or **AUTO** is selected for **3DIF T LOC** under Parameter Settings — Advanced on page 42.	The corresponding detected value is displayed on the LCD.
1LAT PRES	Indicates the present value of the leaving air temperature (LAT) sensor. **Dynamic item:** Appears only if **LAT** or **AUTO** is selected for **3DIF T LOC**.	
1OAT PRES	Indicates the present value of the outdoor air temperature (OAT) sensor. **Dynamic item:** Appears only if an OAT sensor is configured.	
1OAH PRES	Indicates the present value of the outdoor air relative humidity (OAH) sensor. **Dynamic item:** Appears only if an OAH sensor is configured.	
1RAT PRES	Indicates the present value of the return air temperature (RAT) sensor. **Dynamic item:** Appears only if a RAT sensor is configured.	
1RAH PRES	Indicates the present value of the return air relative humidity (RAH) sensor. **Dynamic item:** Appears only if a RAH sensor is configured.	
1CO2 PRES	Indicates the present value of the CO_2 sensor. **Dynamic item:** Appears only if a CO_2 sensor is configured.	
1DCV STATUS	Indicates the demand controlled ventilation (DCV) status. **Dynamic item:** Appears only if a CO_2 sensor is configured. Displays ON if the measured CO_2 concentration value is above the DCV setpoint and OFF if below the DCV setpoint.	ON OFF
1FAN SPD LV	Indicates the current fan speed status (low, medium, or high). If a one-speed fan is connected and configured, then this item is invisible. **Dynamic item:** Appears only if "**6FAN**" is configured as "**2SPEED**" under Parameter Settings — I/O Configurations on page 42.	L H
1ACT OUT	Indicates current position of damper actuator in V.	The corresponding detected value is displayed on the LCD.
1ACT FB	Indicates feedback signal of damper actuator in V.	
1ACT POS	Indicates current position of damper actuator in % Open.	
1ACT CNT	Indicates number of times actuator has cycled (1 cycle = 180 degrees of movement in any direction). Resettable via HMI item **8ACT CNT RESET** under Enter Running State on page 44.	
1EQUIP	Indicates the equipment type. If **HP(O)** or **HP(B)** is chosen for **6AUX1-I**, then the parameter value is **HP(O)** or **HP(B)** respectively. If neither is chosen, then the value is **CON RTU**.	HP(O) HP(B) CON RTU
1OAT LOCK	Indicates status of the OAT cooling lockout function.	NO LCKOUT OVRD
1INS	Indicates the installation date of the economizer controller. If the installation date is incorrect, press Enter to change and confirm month, date, and year.	—

Table 20 — Parameter Settings — Basic

PARAMETER	DESCRIPTION	RANGE	DEFAULT
2 TEMP OFF	Temperature shutoff setpoint can be obtained automatically if a smartphone or tablet with the mobile application installed on it is connected to the network provided by a Wi-Fi/WLAN stick plugged into the economizer controller. This can also be a manually defined setpoint.	48...80°F; increment by 1	63°F
2ENTH OFF	Enthalpy shutoff setpoint can be obtained automatically if a smartphone or tablet with the mobile application installed on it is connected to the network provided by a Wi-Fi/WLAN stick plugged into the economizer controller. This can also be a manually defined setpoint. **Dynamic item:** Appears only if an OAH sensor is configured.	22...30 Btu/lbm; increment by 1	28 Btu/lbm
2DVC	Demand controlled ventilation setpoint can be obtained automatically if a smartphone or tablet with the mobile application installed on it is connected to the network provided by a Wi-Fi/WLAN stick plugged into the economizer controller. This can also be a manually defined setpoint. **Dynamic item:** Appears only if a CO_2 sensor is configured.	300...2000PPM; increment by 100	1100PPM
2FAN L ACT	Damper minimum position when fan runs at a low speed. **Dynamic item:** Appears only if "**6FAN**" is configured as "**2SPEED**" under Parameter Settings — I/O Configurations on page 42.	2...10V; increment by 0.1	3.6V
2FAN H ACT	Damper minimum position when fan runs at a high speed. **Dynamic item:** Appears only if "**6FAN**" is configured as "**1SPEED**" or "**2SPEED**".	2...10V; increment by 0.1	2.8V
2VENTMAX L	DCV maximum position when fan runs at a low speed. **Dynamic item:** Appears only if a CO_2 sensor is configured and "**6FAN**" is configured as "**2SPEED**".	2...10V; increment by 0.1	3.6V
2VENTMAX H	DCV maximum position when fan runs at a high speed. **Dynamic item:** Appears only if a CO_2 sensor is configured and "**6FAN**" is configured as "**1SPEED**" or "**2SPEED**".	2...10V; increment by 0.1	3.6V
2VENTMIN L	DCV minimum position when fan runs at a low speed. **Dynamic item:** Appears only if a CO_2 sensor is configured and "**6FAN**" is configured as "**2SPEED**".	2...10V; increment by 0.1	3.1V
2VENTMIN H	DCV minimum position when fan runs at a high speed. **Dynamic item:** Appears only if a CO_2 sensor is configured and "**6FAN**" is configured as "**1SPEED**" or "**2SPEED**".	2...10V; increment by 0.1	2.3V
CFM COMM	Air Flow Chart: **CFM commissioning** can only be initiated from the mobile application. When **CFM commissioning** is in progress, the local device reads "**CFM COMM**".	—	—
2DEGREES	Temperature unit (°F or °C).	—	°F
2FAN	Fan cfm.	100...50,000cfm; increment by 100	5000cfm
2EX1 L	Exhaust Fan 1 low-speed parameter setting. **Dynamic item:** Appears only if: • Exhaust Fan 1 is configured. • "**6FAN**" is configured as "**2SPEED**".	0...100%; increment by 1	65%
2EX1 H	Exhaust Fan 1 high-speed parameter setting. **Dynamic item:** Appears only if: • Exhaust Fan 1 is configured. • "**6FAN**" is configured as "**1SPEED**" or "**2SPEED**".	0...100%; increment by 1	50%
2EX2 L	Exhaust Fan 2 low-speed parameter setting. **Dynamic item:** Appears only if: • Exhaust Fan 2 is configured. • "**6FAN**" is configured as "**2SPEED**".	0...100%	80%
2EX2 H	Exhaust Fan 2 high-speed parameter setting. **Dynamic item:** Appears only if: • Exhaust Fan 2 is configured. • "**6FAN**" is configured as "**1SPEED**" or "**2SPEED**".	0...100%; increment by 1	75%
2THL	Temperature high limitation. **Dynamic item:** Appears only if an RAT sensor is configured.	0...100%; increment by 1	83%
2EHL	Enthalpy high limitation. **Dynamic item:** Appears only if an RAH sensor is configured.	30...50 Btu/lbm; increment by 1	33 Btu/lbm
2FAN DLY	Cooling delay via increasing fan speed.	0...30 min; increment by 1	5 min.

Table 21 — Parameter Settings — Advanced

PARAMETER	DESCRIPTION	VALUE/RANGE	DEFAULT
3FREEZE POS	Anti-freeze protection damper position (closed or minimum).	CLO MIN	CLO
3SD ACT POS	Damper position during shutdown (open or closed).	CLO OPN	CLO
3DIF T LOC	MAT sensor location: • Choose **MAT** if the sensor is installed before the DX (Direct Expansion) coil. • Choose **LAT** if the sensor is installed after the DX coil. • Choose **AUTO** to let the economizer controller automatically detect the location.	MAT LAT AUTO	LAT
3LAT LOW	Low limit of leaving air temperature. **Dynamic item:** Appears only if **LAT** or **AUTO** is selected for **3DIF T LOC**.	35...65°F; increment by 1	45°F
3LAT HIGH	High limit of leaving air temperature. **Dynamic item:** Appears only if **LAT** or **AUTO** is selected for **3DIF T LOC**.	70...180°F; increment by 1	80°F
3OAT CAL	OAT sensor calibration.	–2.5...2.5°F; increment by 0.5	0°F
3RAT CAL	RAT sensor calibration. **Dynamic item:** Appears only if an RAT sensor is configured.	–2.5...2.5°F; increment by 0.5	—
3OAH CAL	OAH sensor calibration. **Dynamic item:** Appears only if an OAH sensor is configured.	–10...10%; increment by 0.5	0%
3RAH CAL	RAH sensor calibration. **Dynamic item:** Appears only if an RAH sensor is configured.		
3MAT CAL	MAT or LAT sensor calibration.	–2.5...2.5°F; increment by 0.5	0°F
3MAT SET	Setpoint of MAT or LAT sensor.	38...70°F; increment by 1	53°F
3FRZ PROT	Anti-freeze protection setpoint of MAT sensor.	35...55°F; increment by 1	45°F
3ACT TOLR	Actuator tolerance setpoint between output (in percent) and feedback (in percent).	0...15%; increment by 1	8%
3OAT LOCK	OAT lockout set point for anti-freeze protection.	–45...80°F; increment by 1	32°F
3OAT LCKOVRD	When OAT LOCKOUT is enabled, choose to override the cooling lockout function or not.	YES NO	NO
3OAT LOCKODLY	Indicates the overridden time if "**YES**" is selected for "**3OAT LCKOVRD**".	0...300 min; increment by 1	45 min.

Table 22 — Parameter Settings — I/O Configurations

PARAMETER	DESCRIPTION	VALUE	DEFAULT
6OCC	Configures whether occupancy status receives signal from the connected thermostat or is displayed as ALWAYS in the economizer controller.	T-STAT ALWAYS	T-STAT
6AUX1-I	Auxiliary DI-1. Configurable as: • None • Heat Conventional (W1) from thermostat • Heat pump (reversing valve O) • Heat pump (reversing valve B) • Pre-occupancy signal from thermostat • Shutdown signal from unit	NONE HP(O) HP(B) PREOCC SHUTDWN	W1
6AUX2-I	Auxiliary DI-2. Configurable as: • None • Heat stage 1 (W1) from thermostat • Heat pump (reversing valve O) • Heat pump (reversing valve B) • Pre-occupancy signal from thermostat • Shutdown signal from unit **NOTE:** Whichever is chosen for 6AUX1-I does not appear in the list of 6AUX2-I.	NONE W1 HP(O) HP(B) PREOCC SHUTDWN	NONE
6OAT SIG	Configures signal type of OAT sensor.	0-10V NTC10K	NTC10K
6RAT SIG	Configures signal type of RAT sensor.	0-10V NTC10K NONE	NONE
6OAH SIG	Configures signal type of OAH sensor.	0-10V 4-20mA NONE	NONE
6RAH SIG	Configures signal type of RAH sensor.		
6MAT SIG	Configures signal type of MAT or LAT sensor.	0-10V NTC10K	NTC10K
6AUX-AI1	Auxiliary AI-1. Configurable as: • CO_2 sensor • Static pressure (temporarily for cfm commissioning) sensor • None	PRESSURE CO2 NONE	NONE
6X-AI1 SIG	Configures CO2 sensor type. **Dynamic item**: Appears only if "**CO2**" is selected for "**6AUX-AI1**".	0-10V 2-10V 0-5V	0-10V
6CO2 Rng L	Configures the low limit of CO2 measuring range. **Dynamic item**: Appears only if "**CO2**" is selected for "**6AUX-AI1**".	0...500; increment by 10	0
6C02 Rng H	Configures the high limit of CO2 measuring range. **Dynamic item**: Appears only if "**CO2**" is selected for "**6AUX-AI1**".	1000...3000; increment by 50	2000
6AUX-AI2	Choose **ACT FB** if feedback signal is available from the connected damper actuator. Otherwise, choose **NONE**.	ACT FB NONE	ACT FB

Table 22 — Parameter Settings — I/O Configurations (cont)

PARAMETER	DESCRIPTION	VALUE	DEFAULT
6Y2O	Choose "**COOL 2**" if Cooling Stage 2 is available (another compressor is connected to the Economizer). Otherwise, choose "**NONE**".	COOL 2 NONE	COOL 2
6AUX1-O	Auxiliary DO-1. Configurable as: • None. • Exhaust fan (1 or 2). • Alarm output to thermostat (Title 24).	NONE ALARM EXHAUST	EXHAUST
6AUX2-O	Auxiliary DO-2. Configurable as: • None. • Exhaust fan (1 or 2). • Alarm output to thermostat (Title 24). **NOTE:** Except for Exhaust Fan, whichever is chosen for 6AUX1-O does not appear in the list of 6AUX2-O.	NONE ALARM EXHAUST	ALARM
6RS485	Switch between MSTP and Modbus.	MSTP MODBUSSLV	MSTP

Table 23 — Alarm Parameters[a,b]

PARAMETER	DESCRIPTION
NO ALARM	No alarm is activated.
4MAT SEN ALARM	MAT sensor has failed, gone out of range, or become disconnected.
4CO2 SEN ALARM	CO_2 sensor has failed, gone out of range, or become disconnected.
4OAT SEN ALARM	OAT sensor has failed, gone out of range, or become disconnected.
4OAH SEN ALARM	OAH sensor has failed, gone out of range, or become disconnected.
4RAT SEN ALARM	RAT sensor has failed, gone out of range, or become disconnected.
4RAH SEN ALARM	RAH sensor has failed, gone out of range, or become disconnected.
4FREEZE ALARM	Anti-freeze notification when MAT sensor is below anti-freeze protection setpoint.
4RTU SHUTDOWN	Notification of Shutdown Active when SHUTDWN is chosen for 6AUX1-I or 6AUX2-I.
4ACTUATOR ALARM	Actuator gets disconnected or has failed.
4ACT UNDER V	Voltage received by the actuator is below expected range.
4ACT OVER V	Voltage received by the actuator is above expected range.
4ACT STALLED	Damper actuator stopped before achieving commanded position.
4ACT SLIPPING	Damper actuator slips after reaching commanded position.
4NOT ECON	Not economizing when it should.
4ECON SHOULDNT	Economizing when it should not.
4EXCESS OA	Excess outdoor air. Outside air intake is significantly higher than it should be.
4LLA ALARM	Leaving air temperature is lower than the low limit (3LAT LOW).
4HLA ALARM	Leaving air temperature is higher than the high limit (3LAT HIGH).

NOTE(S):

a. All alarms are dynamic items. An alarm appears only if a related symptom mentioned above is detected.
b. An alarm activation triggers a general alarm and then the configured system alarm output (AUX1-O or AUX2-O) is activated. If there is no alarm, then NO ALARM is displayed on the HMI.

Table 24 — Test Commands

PARAMETER	DESCRIPTION
7DAMPER MIN POS	Press Enter to test whether the economizer controller can drive damper to minimum position.
7DAMPER CLOSE	Press Enter to test whether the economizer controller can drive damper to 100% Closed.
7DAMPER OPEN	Press Enter to test whether the economizer controller can drive damper to 100% Open.
7DAMPER ALL	Press Enter to perform all the above tests.
7DAMPER	Press Enter to test whether the economizer controller can drive damper to the selected voltage.
7Y1O	Press Enter to test whether the economizer controller can turn on or off the first stage of cooling (close or open relay Y1O).
7Y2O	Press Enter to test whether the economizer controller can turn on or off the second stage of cooling (close or open relay Y2O).
7AUX1-O	Press Enter to test AUX1-O connection (close or open relay AUX1-O).
7AUX2-O	Press Enter to test AUX2-O connection (close or open relay AUX2-O).

Table 25 — Enter Running State

PARAMETER	DESCRIPTION
8RUN STATE	Change to Running State. Press Enter to confirm the change.
8ENTER RUN?	Confirm the change to Running State.
8FACTORY DEF	Perform factory reset. Press Enter to confirm the reset. (This action resets the controller password to default: OneBT.)
8DEF CONFIRM?	Confirm the factory resetting.
8ACT CNT RESET	Damper count reset.
8VER x.x.x	Firmware version information such as 0.1.10.

Table 26 — Enter Configuration State and Restart

PARAMETER	DESCRIPTION
5CONFIG STATE	Change to Configuration State. Press Enter to confirm the change.
5ENTER CONFIG?	Confirm the change to Configuration State.
5RESTART	Restart the economizer controller. Press Enter to confirm the restart.
5CONF RESTART	Confirm the restart.

INSTALLING OPTIONAL HH57LW001 SINGLE OUTSIDE AIR ENTHALPY SENSOR

When using the HH57LW001 enthalpy sensor (see Fig. 61) for outside air changeover, the existing HH79NZ039 dry bulb sensor (see Fig. 62) must be removed. The enthalpy sensor will be mounted in the same location as the dry bulb sensor (see Fig. 63). When the enthalpy sensor's OA (Outside Air) temperature, enthalpy, and dew point are below their respective setpoints, the outside air can be used for free cooling. When any of these are above the setpoint, free cooling will not be available. Enthalpy setpoints are configurable and create an enthalpy boundary according to the user's input. For additional details, see Fig. 64-65 and Table 27.

Harness 48TC005213 is required to be connected between the EconomizerONE harness in the return air chamber. Harness 48TC005213 has a 5-pin plug that connects directly to the HH57LW001 enthalpy sensor.

Enthalpy Control Sensor Configuration

The optional enthalpy control sensor (P/N: HH57LW001) communicates with the POL224 economizer controller using the 5-wire harness, 48TC005213. The HH57LW001 sensor can be used as a single outside air enthalpy, a differential return enthalpy, or a differential return temperature sensor. Refer to the base unit control wiring diagrams found earlier in this book to wire the HH57LW001 enthalpy sensor for each option. Use Fig. 61 and Table 29 on page 47 to locate the wiring terminals for each enthalpy control sensor.

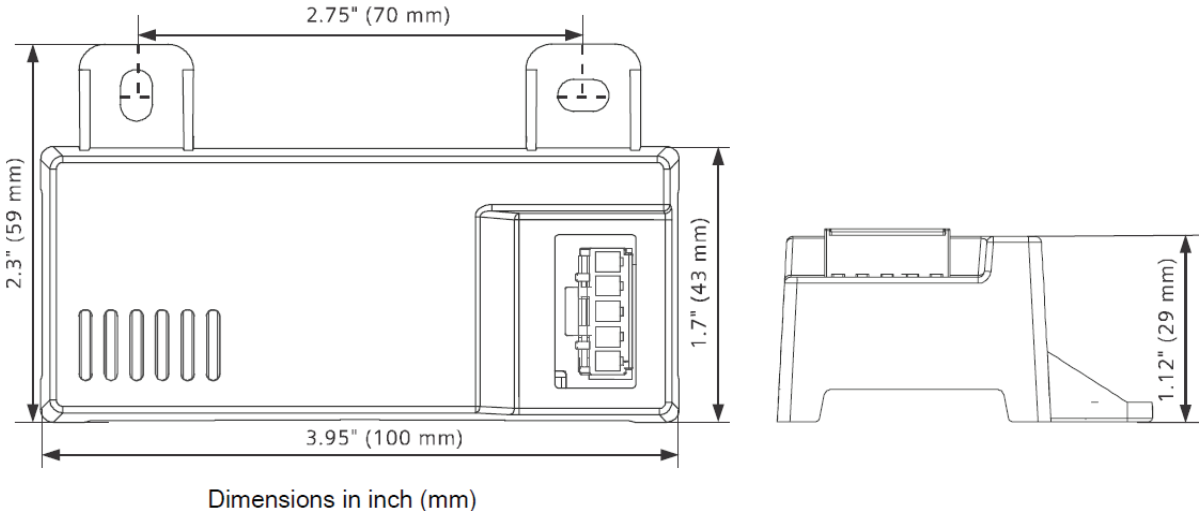

Fig. 61 — HH57LW001 Dimensional, Connection and Switching Information

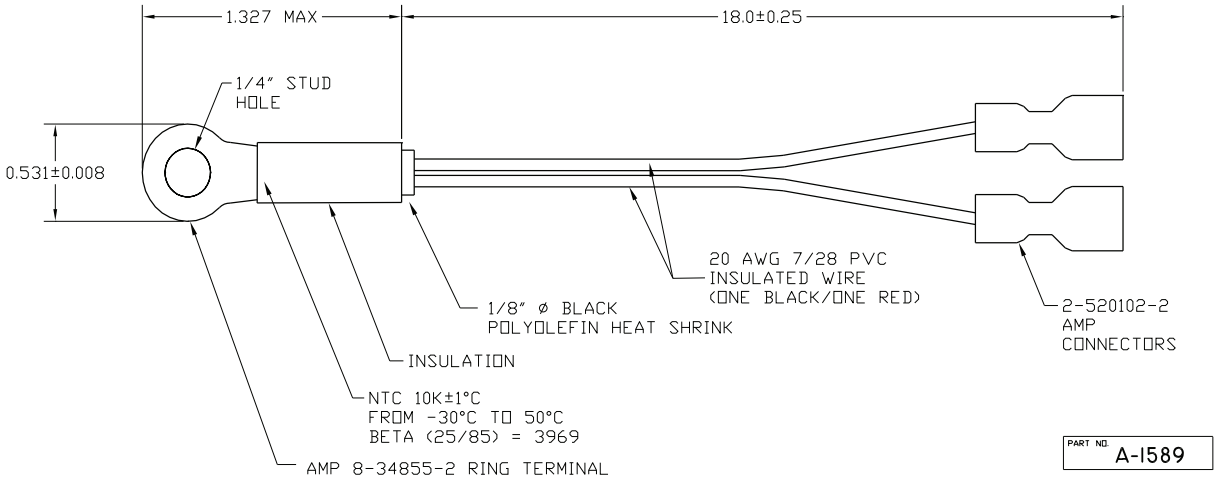

Fig. 62 — HH79NZ039 Dry Bulb and Mixed Air Sensor Wiring

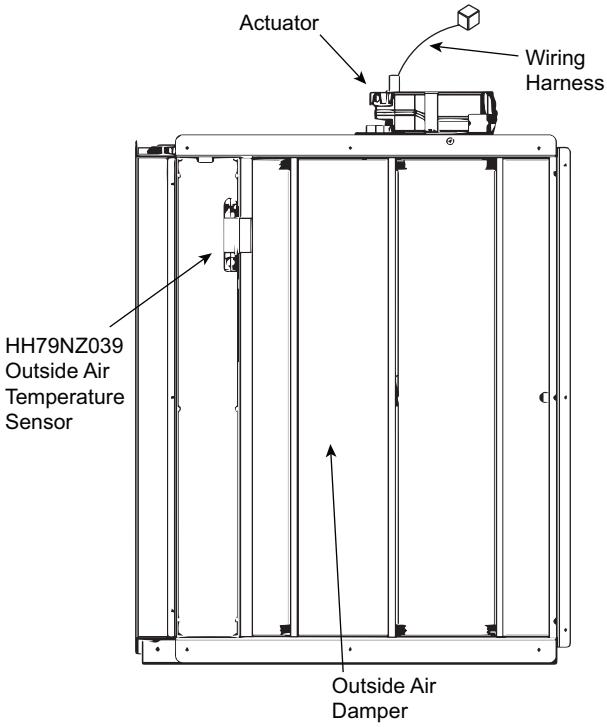

Fig. 63 — EconomizerONE Component Locations (CRECOMZR108A00 Shown)

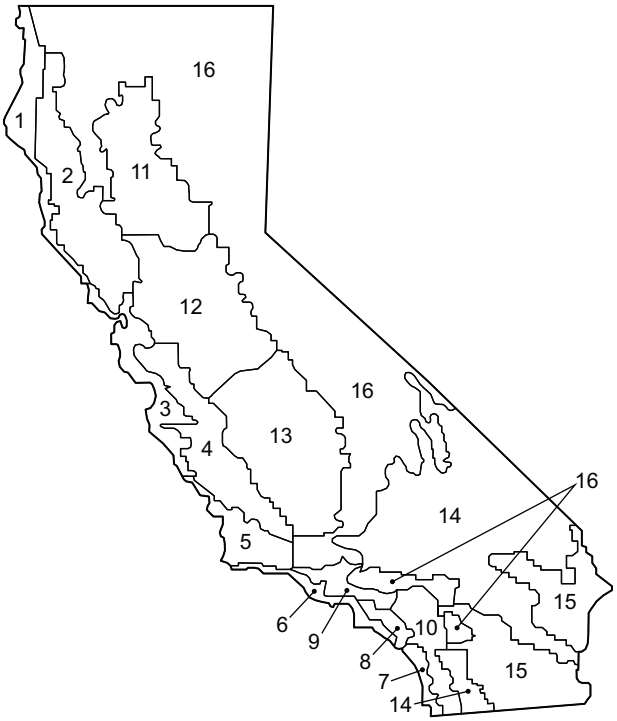

Fig. 64 — California Title 24 Zones

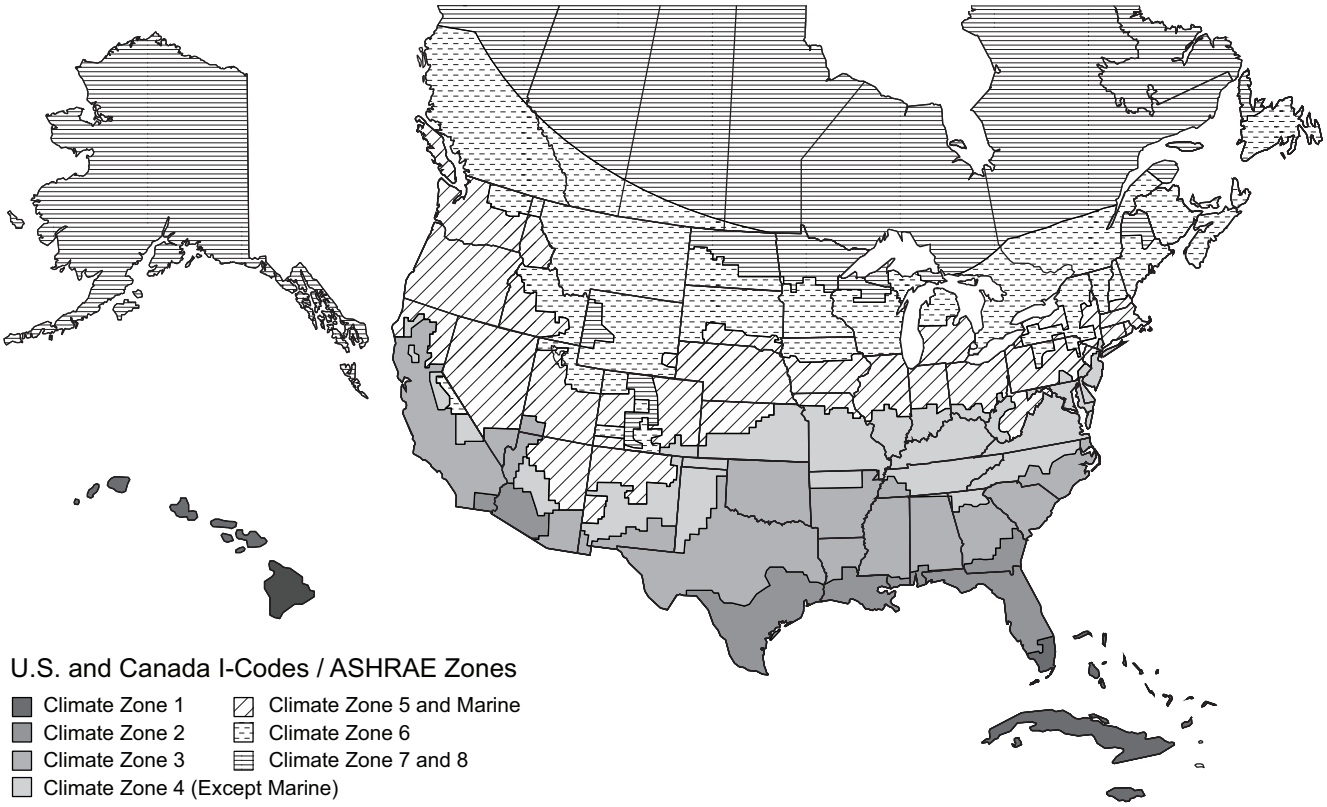

Fig. 65 — U.S. and Canada Climate Zones

Table 27 — Enthalpy Manual Entry Setpoints for EconomizerONE Per Climate Zone

CLIMATE ZONES[a]	2 TEMP OFF	LOWEST SETTING	RH%	2 ENTH OFF	RH%	2THL	2EHL	RH%
1	65°F	22 Btu/lbm	43%	28 Btu/lbm	86%	83°F	33 Btu/lbm	48%
2	65°F	22 Btu/lbm	43%	28 Btu/lbm	86%	83°F	33 Btu/lbm	48%
3	65°F	22 Btu/lbm	43%	28 Btu/lbm	86%	83°F	33 Btu/lbm	48%
4	65°F	22 Btu/lbm	43%	28 Btu/lbm	86%	83°F	33 Btu/lbm	48%
5	70°F	22 Btu/lbm	28%	28 Btu/lbm	65%	83°F	33 Btu/lbm	48%
6	70°F	22 Btu/lbm	28%	28 Btu/lbm	65%	83°F	33 Btu/lbm	48%
7 and 8	75°F	22 Btu/lbm	19%	28 Btu/lbm	50%	83°F	33 Btu/lbm	48%
CALIFORNIA TITLE 24 ZONES[b]	**2 TEMP OFF**	**LOWEST SETTING**	**RH%**	**2 ENTH OFF**	**RH%**	**2THL**	**2EHL**	**RH%**
1	75°F	22 Btu/lbm	19%	28 Btu/lbm	50%	83°F	33 Btu/lbm	48%
2	73°F	22 Btu/lbm	22%	28 Btu/lbm	55%	83°F	33 Btu/lbm	48%
3	75°F	22 Btu/lbm	19%	28 Btu/lbm	55%	83°F	33 Btu/lbm	48%
4	73°F	22 Btu/lbm	22%	28 Btu/lbm	55%	83°F	33 Btu/lbm	48%
5	75°F	22 Btu/lbm	19%	28 Btu/lbm	50%	83°F	33 Btu/lbm	48%
6	71°F	22 Btu/lbm	28%	28 Btu/lbm	62%	83°F	33 Btu/lbm	48%
7	69°F	22 Btu/lbm	32%	28 Btu/lbm	68%	83°F	33 Btu/lbm	48%
8	71°F	22 Btu/lbm	28%	28 Btu/lbm	62%	83°F	33 Btu/lbm	48%
9	71°F	22 Btu/lbm	28%	28 Btu/lbm	62%	83°F	33 Btu/lbm	48%
10	73°F	22 Btu/lbm	22%	28 Btu/lbm	55%	83°F	33 Btu/lbm	48%
11	75°F	22 Btu/lbm	19%	28 Btu/lbm	50%	83°F	33 Btu/lbm	48%
12	75°F	22 Btu/lbm	19%	28 Btu/lbm	50%	83°F	33 Btu/lbm	48%
13	75°F	22 Btu/lbm	19%	28 Btu/lbm	50%	83°F	33 Btu/lbm	48%
14	75°F	22 Btu/lbm	19%	28 Btu/lbm	50%	83°F	33 Btu/lbm	48%
15	75°F	22 Btu/lbm	19%	28 Btu/lbm	50%	83°F	33 Btu/lbm	48%
16	75°F	22 Btu/lbm	19%	28 Btu/lbm	50%	83°F	33 Btu/lbm	48%
CONTROLLER DEFAULT SETTINGS	**2 TEMP OFF**	**—**	**—**	**2 ENTH OFF**	**—**	**2THL**	**2EHL**	**RH%**
DEFAULT SET POINTS	63°F	—	—	28 Btu/lbm	94%	83°F	33 Btu/lbm	48%

NOTE(S):

a. See Fig. 65 for map of U.S. and Canada climate zones.
b. See Fig. 64 for map of California Title 24 zones.

Economizers are shipped standard with an HH79NZ039 outside air dry bulb sensor (see Fig. 62). System default setting (high temp limit) is 63°F (17°C) and has a range of 48°F to 80°F (9°C to 27°C). Sensor is factory installed on economizer.

NOTE: A second HH79NZ039 sensor is provided for mixed air temperature.

NOTE: California high temperature setting requirements by region are shown in Table 28.

Enthalpy Settings (Enthalpy Option)

If installing the optional HH57LW001 enthalpy sensor, the HH79NZ039 dry bulb outside air sensor must first be removed. Wire sensor to harness 48TC005213 and the (5) wires from the harness to the EconomizerONE harness in the return air chamber. Harness 48TC005213 has a 5-pin plug that connects directly to the HH57LW001 enthalpy sensor. Refer to the base unit control wiring diagrams earlier in this book for wiring connections. Refer to Fig. 61 and Table 29.

California's Title 24 High Temperature Limit Settings

California's Title 24 code requires a high temperature limit setting for all dry bulb outside air economizer changeover. The temperatures vary by the region within California. See Table 28 for high limit settings.

Table 28 — California Title 24 Regional High Limit Dry Bulb Temperature Settings[a]

DEVICE TYPE[b]	CLIMATE ZONES	REQUIRED HIGH LIMIT (ECONOMIZER OFF WHEN): DESCRIPTION
FIXED DRY BULB	1, 3, 5, 11-16	OAT exceeds 75°F (23.8°C)
	2, 4, 10	OAT exceeds 73°F (22.7°C)
	6, 8, 9	OAT exceeds 71°F (21.6°C)
	7	OAT exceeds 69°F (20.5°C)
DIFFERENTIAL DRY BULB	1, 3, 5, 11-16	OAT exceeds RA temperature
	2, 4, 10	OAT exceeds return air temperature –2°F (–18.8°C)
	6, 8, 9	OAT exceeds return air temperature –4°F (–20°C)
	7	OAT exceeds return air temperature –6°F (–21.1°C)
FIXED ENTHALPY[c] + FIXED DRY BULB	All	OAT exceeds 28 Btu/lb of dry air[b] or OAT exceeds 75°F (23.8°C)

NOTE(S):

a. This table sourced from 2019 California Energy Code, Title 24, Part 6, Table 140.4-E Air Economizer High Limit Shut Off Control Requirements.
b. Only the high limit control devices listed are allowed to be used and at the set points listed. Others such as Dew Point, Fixed Enthalpy, Electronic Enthalpy, and Differential Enthalpy Controls, may not be used in any climate zone for compliance with Section 140.4(e)1 unless approval for use is provided by the Energy Commission Executive Director.
c. At altitudes substantially different than sea level, the Fixed Enthalpy limit value shall be set to the enthalpy value at 75°F and 50% relative humidity. As an example, at approximately 6,000 foot elevation, the fixed enthalpy limit is approximately 30.7 Btu/lb.

LEGEND

OAT — Outdoor-air Thermostat
RA — Return Air

Table 29 — HH57LW001 Sensor Wiring Terminations

TERMINAL NUMBER	TERMINAL LABEL	TYPE	DESCRIPTION
1	TCOM	NTC 10k	Outside Air Temperature Sensor Output
2	TSIG	NTC 10k	Outside Air Temperature Sensor Output
3	HSIG	0-10 vdc	Outside Air Relative Humidity Sensor Output
4	HCOM	COMMON	Sensor 24-v Common Input
5	H24V	24 vac	Sensor 24-v Operating Voltage Input

CHECKOUT

Inspect all wiring connections at the economizer module's terminals, and verify compliance with the installation wiring diagrams. For checkout, review the Status of each configured parameter and perform the Test Commands tests (refer to Table 24).

For information about menu navigation and use of the keypad see Interface Overview on page 29.

⚠ WARNING

ELECTRIC SHOCK HAZARD

Failure to follow this warning could result in personal injury, property damage, or death.

Before performing service or maintenance operations on unit, always turn off main power switch to unit and install lock(s) and lockout tag(s). Unit may have more than one power switch. Ensure electrical service to rooftop unit agrees with voltage and amperage listed on the unit rating plate.

If any wiring changes are required, first be sure to remove power from the economizer module before starting work. Pay particular attention to verifying the power connection (24 vac).

Power Up

After the POL224 module is mounted and wired, apply power.

Initial Menu Display

On initial start up, "Welcome" displays on the economizer HMI screen. After a brief pause, the Parameter Settings — I/O Configuration (refer to Table 22) of the software appears, allowing the user to check that presets and default values are configured correctly.

Power Loss (Outage or Brownout)

All set points and advanced settings are restored after any power loss or interruption.

NOTE: All settings are stored in non-volatile flash memory.

Status

Use the Status menu (refer to Table 19) to check the parameter values for the various devices and sensors configured.

NOTE: For information about menu navigation and use of the keypad, see Interface Overview on page 29.

Checkout Tests

Use the Test Commands menu (refer to Table 24) to test the damper operation and any configured outputs. Only items that are configured are shown in the Test Commands menu.

NOTE: For information about menu navigation and use of the keypad, see Interface Overview on page 29.

To perform a Test Command test:

1. Scroll to the desired test in Test Command menu 7 using the Up and Down buttons.
2. Press the Enter button to select the item. RUN? appears.
3. Press the Enter button to start the test. The unit pauses and then displays IN PROGRESS. When the test is complete, DONE appears.
4. When all desired parameters have been tested, press Enter + Up to end the test.

The Checkout tests can all be performed at the time of installation or at any time during the operation of the system as a test that the system is operable.

⚠ CAUTION

EQUIPMENT DAMAGE HAZARD

Failure to follow this caution may result in equipment damage.

Be sure to allow enough time for compressor start-up and shutdown between checkout tests so that you do not short-cycle the compressors.

TROUBLESHOOTING

For EconomizerONE troubleshooting issues see Table 30.

Table 30 — Operating Issues and Concerns

SYMPTOM	REASON	SOLUTION
An alarm is displayed on the LCD	Sensor, damper, or the whole working system may not work properly	Check sensor, damper, or the whole working system following the detailed alarm information.
DAC LED is blinking RED	Damper slippage	Check whether the damper works properly.
DAC LED is blinking RED quickly	Damper unplugged	Check whether the damper is connected.
DAC LED is OFF	Terminal ACT-FB is configured but there is no available feedback signal	Check whether the feedback signal is connected; check if ACT-FB is faulty.
Economizer controller has no alarm, but the Free Cooling LED will not turn on when the OA seems to be suitable for Free Cooling	Shutoff SP setting error	Shutoff temperature and/or enthalpy set point is incorrectly set up. Consult an HVAC professional to set up the shutoff set point correctly.
	OA temp is too low	The OA temperature is too low; therefore, there is no cooling demand. This could possibly enable anti-freeze protection.
	OA temp is too high or too humid	In DIFF mode, even though OA temperature is lower than RA temperature, if both OA and RA temperatures exceed the high limit, then Free Cooling turns off. In Differential Enthalpy control mode, even though OA enthalpy is lower than RA enthalpy, if both OA and RA enthalpy exceed the high limit, then Free Cooling turns off.
Economizer controller/mechanical cooling is not operating	No input power	Use a multi-meter to check whether there is 24 vac ± 25% (18-30 vac) at the POWER terminals. If there is no voltage or if the voltage is significantly low, then check the transformer output voltage at the RTU. If 24-v is not present at the transformer secondary side, then check the primary line voltage to the transformer. If the line voltage is not present at the transformer primary side, then check the primary power to the RTU, fuses, circuit breaker, and so on.
	Brownout	If voltage is below 17-v, then the economizer controller may be in Brownout Protection mode. This mode disables all of the relay outputs. When the power is 19 vac or higher, the economizer controller and RTU operate normally.
	Y1/Y2 signal is missing from the thermostat	Mechanical cooling does not run until there is cooling demand (Y1/Y2 Active). Check the wiring from Y1I and Y2I terminals to the commercial thermostat. 24-v should be present between Y1I/Y2I and Y1O/Y2O respectively.
	24 vac~ and 24 vac ⊥ are incorrectly wired	24 vac power supply has polarity when all devices are powered by the same 24 vac transformer; reversing polarity may cause a short circuit that can damage the system. Follow the transformer polarity mark, check the wiring of 24-v~ (or G or 24-v+), and ensure that they are tied to the same polar of 24 vac power supply; while checking the wiring of ⊥ (or G0 or 24-v- or COM), ensure that they are all tied to another polar of 24 vac power supply.
Firmware update failure	Application file is damaged, operation is incorrect, and/or USB flash disk does not work properly	Reload a BIN file, restart the controller, update firmware[a], or change a USB flash disk. Contact service provider if failure still exists.
Free Cooling LED is solid RED	Sensor, damper, or whole working system may not work properly	Check sensor, damper, or the whole working system following the detailed alarm information.
Free Cooling LED is blinking RED	Not economizing when it should	Check the whole economizer working system, such as the sensor, damper, and thermostat.
Incorrect controller password error on mobile application	For CO_2 and single enthalpy (control mode 3) configurations from the factory, the password has changed	For units coming from the factory with CO_2 configuration or single enthalpy (control mode 3), use the controller password OneBT2.1. For all other units, use the controller password OneBT. Performing a factory reset on the controller will also reset the password to OneBT.
RS485 communication failure	RS485 signal or configuration error	Check wiring, configuration, Baud Rate (using mobile application), and other network communication parameters.
Sensor LED is blinking RED	Excess outdoor air	Check the whole economizer working system, such as the sensor, damper, and thermostat.
Sensor LED is solid RED	Mixed Air (MA) sensor error	Check the MA sensor. It must be either a Type II NTC 10K or 0-10 vdc sensor.
	Outside Air (OA)/Return Air (RA) sensor error	Check the wiring and signal of the OA sensor. If in Differential (DIFF) mode, also check the RA sensor. The following sensor signals are valid: Type II NTC 10K or 0-10 vdc temperature. 0-10 vdc or 4-20 mA humidity.
	Air temperature failure/fault	Check the air temperature sensor signal. The valid signal must be Type II NTC 10K or 0-10 vdc.
Sensor LED is OFF	CO_2 sensor error	Check CO_2 sensor connection, sensor signal (under range or over range), and sensor signal type.
Sensor LED is YELLOW	Humidity sensor error	Check humidity sensor connection, sensor signal (under range or over range), and sensor signal type.
Wi-Fi connection failure	Wi-Fi/WLAN stick error or wrong user name and password	Unplug and re-plug in the Wi-Fi/WLAN stick, enter a correct user name and password, restart the controller, or replace the Wi-Fi/WLAN stick. If the Wi-Fi/WLAN stick is POL903.00/100, then the default user name and password are Siemens-WLAN-Stick and SIBPAdmin. DNS name is siemens.wlanstick. Contact Application Engineering for information on this accessory.

NOTE(S):

a. Back up configurations before firmware update. All the previous configuration data is erased after firmware update. Contact Application Engineering for more information on support for firmware.
IMPORTANT: If the controller enters the configuration state for the convenience of I/O configurations, then users can manually switch to the running state after finishing configurations. To do so, press Enter + Up at the same time, then press Enter to confirm the switch after 8RUN STATE appears on the LCD.

SystemVu™ Controller (Factory Option)

For details on operating 50FC-*08-14 units equipped with the factory-installed SystemVu controller option, refer to the *FC/GC Series Single Package Rooftop Units with SystemVu Controller Controls, Start-up, Operation and Troubleshooting* manual.

Smoke Detectors

Smoke detectors are available as factory-installed options on 50FC models. Smoke detectors may be specified for supply air only, for return air without or with economizer, or in combination of supply air and return air. Return-air smoke detectors are arranged for vertical return configurations only. All components necessary for operation are factory-provided and mounted. The unit is factory-configured for immediate smoke detector shutdown operation; additional wiring or modifications to unit terminal board may be necessary to complete the unit and smoke detector configuration to meet project requirements.

Units equipped with factory-optional return-air smoke detectors require a relocation of the sensor module at unit installation. See Fig. 66 for the as-shipped location.

Completing Return Air Smoke Sensor Installation

1. Unscrew the two screws holding the return-air smoke detector assembly. See Fig. 67, Step 1. Save the screws.
2. Turn the assembly 90 degrees and then rotate end to end. Make sure that the elbow fitting is pointing down. See Fig. 67, Step 2.
3. Screw the sensor and detector plate into its operating position using screws from Step 1. See Fig. 67, Step 3.
4. Connect the flexible tube on the sampling inlet to the sampling tube on the basepan.

Additional Application Data

Refer to the application data document "Factory Installed Smoke Detectors for Small and Medium Rooftop Units 2 to 25 Tons" for discussions on additional control features of these smoke detectors including multiple unit coordination.

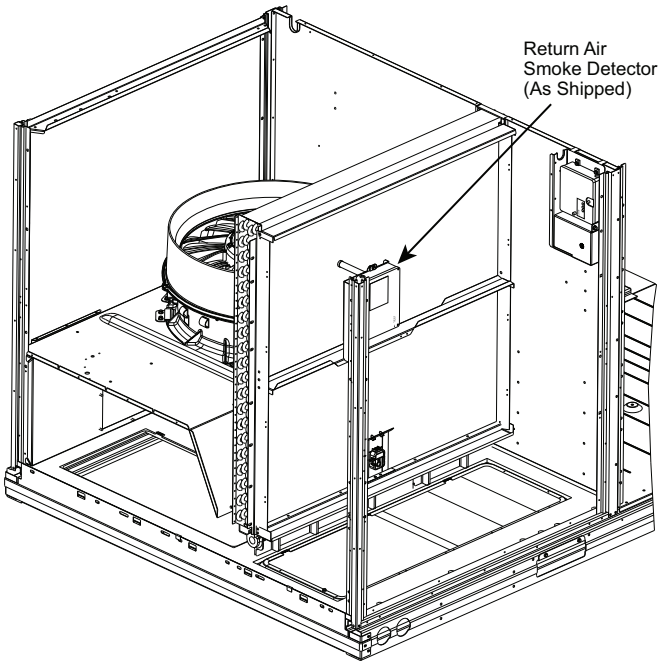

Fig. 66 — Return Air Smoke Detector, Shipping Position

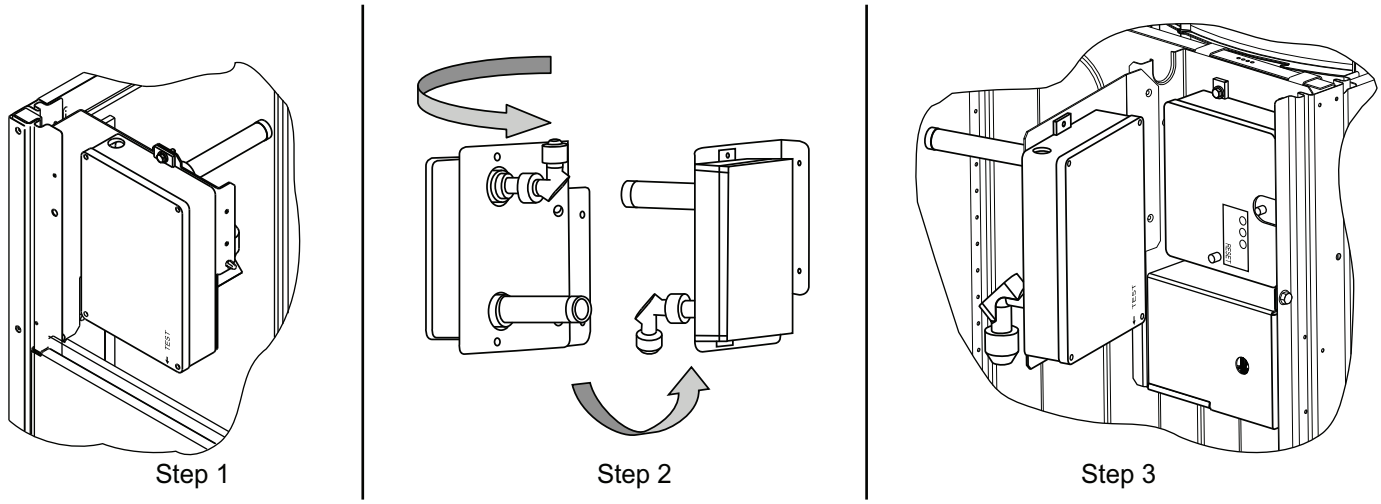

Fig. 67 — Completing Installation of Return Air Smoke Sensor

Step 11 — Adjust Factory-Installed Options

SMOKE DETECTORS

Smoke detector(s) will be connected at the Unit Control Board (UCB), at terminals marked “Smoke Shutdown.”

ECONOMIZERONE OCCUPANCY SWITCH

If external occupancy control is desired, connect a time clock or remotely controlled switch (closed for Occupied, open for Unoccupied sequence) at terminals marked OCCUPANCY. Detach the jumper covering the “Occupancy” terminals on the UCB and then attach the required connections.

Step 12 — Install Accessories

Available accessories include:

- Roof curb
- Thru-base connection kit (must be installed before unit is set on curb)
- Manual outside air damper
- Two-Position motorized outside air damper
- EconomizerONE (with control and integrated barometric relief)
- EconoMi$er® 2 (without control/for external signal and integrated barometric relief)
- Power exhaust
- Differential dry bulb sensor (EconomizerONE)
- Outdoor enthalpy sensor
- Differential enthalpy sensor
- Electric heaters
- Single point kits
- Low Ambient Controls
- Thermostat / Sensors
- CO_2 sensor
- Louvered hail guard
- Phase monitor control

Refer to separate installation instructions for information on installing these accessories.

Step 13 — Fan Speed Set Up

UNITS WITH ELECTROMECHANICAL CONTROLS

The fan speed set up controls are located on the lower section of the Unit Control Board (UCB). See Fig. 68 for location.

1. Check the job specifications for the cfm (cubic feet per minute) and ESP (external static pressure) required.
2. Using the chart on the fan speed set up labels (see Fig. 69), calculate the vdc from the cfm and ESP for the base unit. Then add vdc for any accessories installed per the “Field Accessories” section of the label.

NOTE: The fan speed set up labels are located on the High Voltage cover in the Control Box.

3. Connect a multimeter to the vdc terminals on the UCB.
4. Set the Range Switch to either A, B, or C per the Switch Range table.
5. Using a straight blade screwdriver, turn the vdc control dial to fine tune the vdc reading.
6. Record the reading in the Field Setting field.

NOTE: Fan set-up vdc is not affected by the operating stage of the unit.

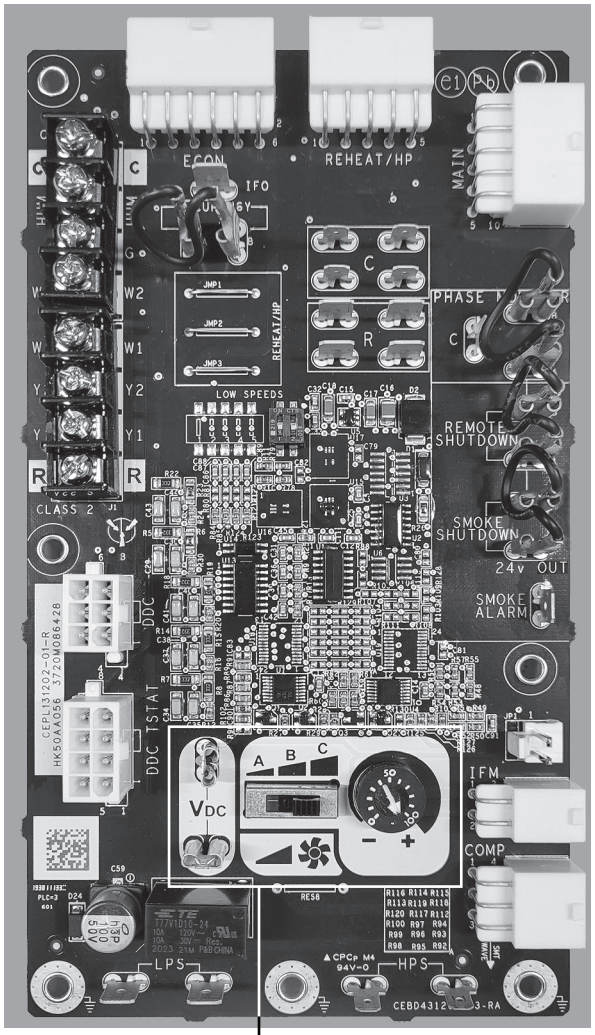

Fig. 68 — UCB Fan Speed Controls

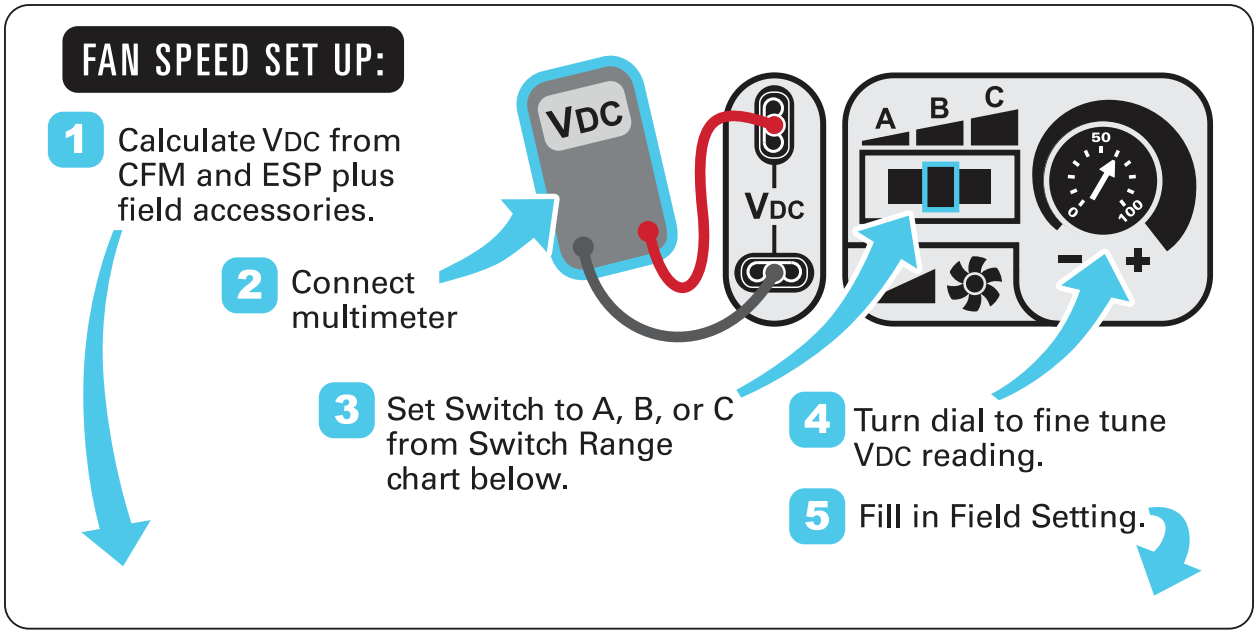

VDC Calculator

UNIT MODEL NUMBER / CFM	ESP in. wg 0.2	0.4	0.6	0.8	1.0	1.2	1.4	1.6	1.8	2.0
3000	5.6	6.1	6.5	6.9	7.3	7.6	8.0	8.3	8.6	8.9
3250	6.0	6.4	6.8	7.2	7.6	7.9	8.3	8.6	8.9	9.2
3500	6.4	6.8	7.2	7.6	7.9	8.2	8.6	8.9	9.2	9.5
3750	6.8	7.2	7.5	7.9	8.2	8.6	8.9	9.2	9.5	9.7
4000	7.2	7.6	7.9	8.2	8.6	8.9	9.2	9.5	9.8	
4250	7.6	8.0	8.3	8.6	8.9	9.2	9.5	9.8		
4500	8.0	8.4	8.7	9.0	9.3	9.6	9.8			
4750	8.5	8.8	9.1	9.3	9.6	9.9				
5000	8.9	9.2	9.4	9.7	10.0					
Field Accessories:										
Economizer	0.4	0.4	0.4	0.4	0.4	0.4	0.4	0.4	0.4	0.4

Factory Setting: 9.0 VDC

Field Setting:

Record field setting here

_____ VDC

Switch Range: *

A	4.1 - 7.5
B	6.9 - 8.7
C	7.7 - 10.0

** Overlap in A, B, C switch range designed for maximum field adjustment potential. For example 7.2 can be set at either A or B.*

Fig. 69 — Example of Fan Speed Set Up Labels for Electromechanical Controls

UNITS WITH SYSTEMVU™ CONTROLS

On units equipped with the factory-installed SystemVu controller, the fan speed settings are accessed through the SystemVu interface.

1. Check the job specifications for the cfm (cubic feet per minute) and ESP (external static pressure) required.
2. Using the chart on the Fan Speed Set Up labels (see Fig. 70), calculate the rpm from the cfm and ESP for the base unit plus any field accessories (as listed on the label).
3. If installing any accessories listed at the bottom of the Set Up Label, add accessory rpm to base unit rpm in upper portion of label.

NOTE: The fan speed set up labels are located on the High Voltage cover in the Control Box.

4. Press any key on the SystemVu interface to activate the display backlight and then press the MENU key.
5. Using the UP and DOWN arrow keys highlight SETTINGS and then press ENTER.
6. Use the DOWN arrow key highlight the UNIT CONFIGURATIONS menu then press ENTER.
7. Highlight UNIT CONFIGURATIONS then press ENTER.
8. Highlight INDOOR FAN and then press ENTER.
9. Refer to the job specifications to set the following, determining the values per the RPM Calculator label (see Fig. 70). Use the UP and DOWN arrow keys and the BACK key to set the values. Press ENTER after setting each value to continue to the next selection.

- IDF VENT SPD
- IDF HEAT SPD
- IDF HIGH COOL SPD
- IDF FREE COOL SPD

For further details, see the *FC/GC Series Single Package Rooftop Units with SystemVu Controller Controls, Start-up, Operation and Troubleshooting* manual.

SystemVu™

FAN SPEED SETUP (RPM)

MAIN MENU:

SETTINGS

→ UNIT CONFIGURATIONS

→ INDOOR FAN

- → IDF VENT SPD -RPM
- → IDF HEAT SPD -RPM
- → IDF HIGH COOL SPD -RPM
- → IDF FREE COOL SPD -RPM

↓ DETERMINE RPM FROM BELOW ↓

48TC003136 REV. B

RPM Calculator

UNIT MODEL NUMBER / CFM	ESP in. wg 0.2	0.4	0.6	0.8	1.0	1.2	1.4	1.6	1.8	2.0
3000	1250	1348	1441	1528	1610	1688	1762	1832	1899	1963
3250	1336	1428	1515	1598	1677	1753	1824	1893	1959	2021
3500	1423	1509	1591	1670	1746	1819	1888	1955	2020	2081
3750	1510	1591	1669	1744	1817	1887	1954	2019	2082	2143
4000	1598	1675	1749	1820	1890	1957	2022	2085	2146	
4250	1687	1759	1829	1898	1964	2029	2092	2153		
4500	1776	1845	1912	1977	2041	2103	2163			
4750	1866	1931	1995	2057	2118	2178				
5000	1955	2018	2079	2138	2197					
Field Accessories:										
Economizer	89	89	89	89	89	89	89	89	89	89

Example of Fan Speed Set Up Labels for SystemVu™ Controls

Fig. 70 — Example of Fan Speed Set Up Labels for SystemVu™ Controls

FASTENER TORQUE VALUES

Table 30 details the torque values for the fasteners referenced in this installation instruction.

Table 30 — Fastener Torque Values

FASTENER	TORQUE VALUE
Heat shield screws	30 in.-lb (3.4 Nm) ±2 in.-lb (0.2 Nm)
Stator motor mounting screws	23 in.-lb (2.6 Nm) ±2 in.-lb (0.2 Nm)
Fan rotor mounting screws	23 in.-lb (2.6 Nm) ±2 in.-lb (0.2 Nm)
Limit switch screws	50 in.-lb (5.7 Nm) ±5 in.-lb (0.6 Nm)
Fan deck bracket screws	50 in.-lb (5.7 Nm) ±5 in.-lb (0.6 Nm)
Condenser fan motor mounting screws	30 in.-lb (3.4 Nm) ±3 in.-lb (0.3 Nm)
Condenser fan hub set screw	60 in.-lb (6.8 Nm) ±5 in.-lb (0.6 Nm)
Compressor mounting bolts	65 in.-lb (7.3 Nm) ±10 in.-lb (1.2 Nm)
Control box grounding lug	20 in.-lb (2.25 Nm) ±2 in.-lb (0.2 Nm)

© 2024 Carrier

START-UP CHECKLIST

50FE-*08-12 Single Package Rooftop Electric Cooling Unit
(Remove and use for job file)

NOTE: To avoid injury to personnel and damage to equipment or property when completing the procedures listed in this start-up checklist, use good judgment, follow safe practices, and adhere to the safety considerations/information as outlined in preceding sections of this Installation Instruction document.

I. PRELIMINARY INFORMATION

MODEL NO. _____
JOB NAME _____
SERIAL NO. _____
ADDRESS _____
START-UP DATE _____
TECHNICIAN NAME _____
ADDITIONAL ACCESSORIES _____
_____

II. PRE-START-UP

Verify that all packaging materials have been removed from unit.	(Y/N) _____
Verify installation of outdoor air hood.	(Y/N) _____
Verify that condensate connection is installed per instructions.	(Y/N) _____
Verify that all electrical connections and terminals are tight.	(Y/N) _____
Verify ground integrity with a continuity test.	(Y/N) _____
Check that indoor-air filters are clean and in place.	(Y/N) _____
Check that outdoor air inlet screens are in place.	(Y/N) _____
Verify that unit is level.	(Y/N) _____
Verify that fan assembly is free of obstructions and rotor spins freely.	(Y/N) _____
Verify that scroll compressors are rotating in the correct direction.	(Y/N) _____
Verify yellow LED light on dissipation board is steady.	(Y/N) _____
Verify the dissipation board test button will operate the indoor fan for 1 minute.	(Y/N) _____
Verify installation of thermostat.	(Y/N) _____

III. START-UP

ELECTRICAL

Supply Voltage	L1-L2_____	L2-L3_____	L3-L1_____
Compressor Amps 1	L1 _____	L2 _____	L3 _____
Compressor Amps 2	L1 _____	L2 _____	L3 _____
Supply Fan Amps	L1 _____	L2 _____	L3 _____

TEMPERATURES

Outdoor-Air Temperature	_____ °F DB (Dry Bulb)	
Return-Air Temperature	_____ °F DB	_____ °F WB (Wet Bulb)
Cooling Supply Air Temperature	_____ °F	

PRESSURES

Refrigerant Suction _____PSIG
Refrigerant Discharge _____PSIG
Verify Refrigerant Charge using Charging Charts. (Y/N) _____

GENERAL

Economizer minimum vent and changeover settings to job requirements (if equipped). (Y/N) _____
Verify smoke detector unit shutdown by utilizing magnet test. (Y/N) _____

IV. HUMIDI-MIZER® SYSTEM START-UP

STEPS

1. Check UCB (Unit Control Board) for jumper 1, 2, 3 (Jumper 1, 2, 3 must be cut and open). (Y/N) _____
2. Open humidistat contacts. (Y/N) _____
3. Start unit In cooling (Close Y1). (Y/N) _____

OBSERVE AND RECORD

a. Suction pressure _____ PSIG
b. Discharge pressure _____ PSIG
c. Entering air temperature _____ °F
d. Liquid line temperature at outlet or reheat coil _____ °F
e. Confirm correct rotation for compressor. (Y/N) _____
f. Check for correct ramp-up of outdoor fan motor as condenser coil warms. (Y/N) _____

4. Switch unit to high-latent mode (sub-cooler) by closing humidistat with Y1 closed. (Y/N) _____
5. Check unit charge per charging chart. (Y/N) _____

OBSERVE

a. Reduction in suction pressure (5 to 7 psi expected). (Y/N) _____
b. Discharge pressure unchanged. (Y/N) _____
c. Liquid temperature drops to 50 to 55°F range. (Y/N) _____
d. LSV solenoid energized (valve closes). (Y/N) _____

6. Switch unit to dehumid (reheat) by opening Y1. (Y/N) _____

OBSERVE

a. Suction pressure increases to normal cooling level.
b. Discharge pressure decreases (35 to 50 psi). (Limited by head pressure control.)
c. Liquid temperature returns to normal cooling level.
d. LSV solenoid energized (valve closes).
e. DSV solenoid energized, valve opens.

7. With unit in dehumid mode close W1 compressor and outdoor fan stop; LSV and DSV solenoids de-energized. (Y/N) _____
8. Open W1 restore unit to dehumid mode. (Y/N) _____
9. Open humidistat input compressor and outdoor fan stop; LSV and DSV solenoids de-energized. (Y/N) _____
10. Restore set points for thermostat and humidistat. (Y/N) _____

CUT ALONG DOTTED LINE

CUT ALONG DOTTED LINE

© 2024 Carrier