50FEQ*04-07
Single Package Rooftop Heat Pump with Puron Advance™ (R-454B) Refrigerant 3 to 6 Nominal Tons

Service and Maintenance Instructions

CONTENTS

Page

SAFETY CONSIDERATIONS 2
UNIT ARRANGEMENT AND ACCESS 4
General 4
Servicing 4
Routine Maintenance 4
Filters 5
SUPPLY FAN (BLOWER) SECTION 6
Supply Fan (Direct-Drive) 6
Staged Air Volume 11
COOLING 11
Condenser Coil (Outdoor) 11
Evaporator Coil (Indoor) 11
Condenser Coil Maintenance and Cleaning Recommendation 11
Evaporator Coil 13
Refrigeration System Components 13
Evaporator Coil Metering Devices 15
THERMOSTATIC EXPANSION VALVE (TXV) 15
TXV Operation 15
Replacing TXV 15
Refrigerant System Pressure Access Ports 15
PURON ADVANCE™ (R-454B) REFRIGERANT . . . 16
Refrigerant Charge 16
COMPRESSOR 21
Lubrication 21
Replacing Compressor 21
Compressor Rotation 21
Filter Drier 21
Condenser-Fan Adjustment 21
Troubleshooting Cooling System 23
CONVENIENCE OUTLETS 24
Convenience Outlets 24
Installing Weatherproof Cover 24
Non-Powered Type 24
Unit-Powered Type 24
Duty Cycle 25
Maintenance 25
Fuse on Powered Type 25
COMMERICAL DEFROST CONTROL 25
Reversing Valve Control 26
Compressor Control 26
Auxiliary (Electric) Heat Control 26
Defrost 27
ELECTRIC HEATERS 27
Single Point Boxes and Supplementary Fuses . . . 28
Safety Devices 28
Completing Heater Installation 28
SMOKE DETECTORS 29
System 29
Controller 29
Smoke Detector Sensor 29
Smoke Detector Locations 29
Completing Installation of Return Air Smoke Detector 30
FIOP Smoke Detector Wiring and Response 31
SENSOR AND CONTROLLER TESTS 32
Sensor Alarm Test 32
Controller Alarm Test 32
Dirty Controller Test 32
Dirty Sensor Test 32
Changing the Dirty Sensor Test 33
Remote Station Test 33
SD-TRM4 Remote Alarm Test Procedure 33
Remote Test/Reset Station Dirty Sensor Test 33
Dirty Sensor Test Using an SD-TRM4 33
Detector Cleaning 33
Indicators 34
Troubleshooting 34
PROTECTIVE DEVICES 35
Compressor Protection 35
Refrigerant Leak Protection 35
Relief Device 35
Control Circuit, 24-V 35
SYSTEMVU™ CONTROL SYSTEM 36
SystemVu Interface 36
Additional SystemVu Installation and Troubleshooting 36
A2L REFRIGERATION INFORMATION 37
Servicing 37
Minimum Conditioned Space Area 37
Detection of Flammable Refrigerants 37
Evacuation, Removal, and Recovery 38
DECOMMISSIONING 38
Leak Dissipation System 39
Sequence of Operation 39
Leak Dissipation System Self-Test 39
Troubleshooting 41
ECONOMIZER SYSTEMS 42
EconoMi$er 2 43
EconomizerONE (Field-Installed Accessory) 44
EconomizerONE (Factory Option) 48
PRE-START-UP/START-UP 69
START-UP, GENERAL 69

Manufacturer reserves the right to discontinue, or change at any time, specifications or designs without notice and without incurring obligations.

Unit Preparation 69
Additional Installation/Inspection 69
Return-Air Filters 69
Outdoor-Air Inlet Screens 69
Compressor Mounting 69
Internal Wiring 69
Refrigerant Service Ports 69
Compressor Rotation 70
Refrigerant Service Ports 70
Cooling 70
Heating 70
Ventilation (Continuous Fan) 70
FASTENER TORQUE VALUES 70
START-UP, SYSTEMVU CONTROLS 70
APPENDIX A — MODEL NUMBER NOMENCLATURE. 65
APPENDIX B — PHYSICAL DATA. 66
APPENDIX C — FAN PERFORMANCE 68
APPENDIX D — WIRING DIAGRAMS 97
APPENDIX E — LOW AMBIENT CONTROL SENSOR LOCATION 112
START-UP CHECKLIST CL-1

SAFETY CONSIDERATIONS

Installation and servicing of air-conditioning equipment can be hazardous due to system pressure and electrical components. Only trained and qualified service personnel should install, repair, or service air-conditioning equipment.

Untrained personnel can perform basic maintenance functions of cleaning coils and filters and replacing filters. All other operations should be performed by trained service personnel. When working on air-conditioning equipment, observe precautions in the literature, tags and labels attached to the unit, and other safety precautions that may apply.

Follow all safety codes. Wear safety glasses and work gloves. Use quenching cloth for unbrazing operations. Have fire extinguisher available for all brazing operations.

It is important to recognize safety information. This is the safety-alert symbol ⚠. When you see this symbol on the unit and in instructions or manuals, be alert to the potential for personal injury.

Understand the signal words DANGER, WARNING, CAUTION, and NOTE. These words are used with the safety-alert symbol. DANGER identifies the most serious hazards which **will** result in severe personal injury or death. WARNING signifies hazards which **could** result in personal injury or death. CAUTION is used to identify unsafe practices, which **may** result in minor personal injury or product and property damage. NOTE is used to highlight suggestions which **will** result in enhanced installation, reliability, or operation.

⚠ WARNING

UNIT OPERATION AND SAFETY HAZARD

Failure to follow this warning could cause personal injury, death and/or equipment damage.

R-454B is an A2L refrigerant. All service equipment or components must be A2L refrigerant rated. Do not use non-A2L rated equipment or components on R-454B refrigerant equipment.

⚠ WARNING

PERSONAL INJURY AND ENVIRONMENTAL HAZARD

Failure to follow this warning could cause personal injury or death.

Relieve pressure and recover all refrigerant before system repair or final unit disposal.

Wear safety glasses and gloves when handling refrigerants. Keep torches and other ignition sources away from refrigerants and oils.

⚠ WARNING

Use caution when servicing compressor terminal pins. System or compressor abnormalities can dislodge pins allowing oil and refrigerant to vent under pressure.

⚠ AVERTISSEMENT

Soyez prudent lors de l'entretien des bornes du compresseur. Les anomalies du système ou du compresseur peuvent déloger les bornes, permettant à l'huile et au réfrigérant de s'évacuer sous pression.

⚠ WARNING

FIRE, EXPLOSION HAZARD

Failure to follow this warning could result in death, serious personal injury and/or property damage.

Never use non-certified refrigerants in this product. Non-certified refrigerants could contain contaminates that could lead to unsafe operating conditions. Use ONLY refrigerants that conform to AHRI Standard 700.

⚠ CAUTION

UNIT DAMAGE HAZARD

Failure to follow this caution may result in reduced unit performance or unit shutdown.

High velocity water from a pressure washer, garden hose, or compressed air should never be used to clean a coil. The force of the water or air jet will bend the fin edges and increase airside pressure drop.

⚠ WARNING

ELECTRICAL OPERATION HAZARD

Failure to follow this warning could result in personal injury or death.

Units with convenience outlet circuits may use multiple disconnects. Check convenience outlet for power status before opening unit for service. Locate its disconnect switch, if appropriate, and open it. Lock-out and tag-out this switch, if necessary.

IMPORTANT: Lockout/tag-out is a term used when electrical power switches are physically locked preventing power to the unit. A placard is placed on the power switch alerting service personnel that the power is disconnected.

The following symbols may be seen on the equipment:

SYMBOL	CODE	MEANING
	GHS02: Flammable	Flammable gas
	ISO 7000-0790 (2004-01)	Read operator's manual.
	ISO 7000-1659 (2004-01)	Service indicator: read technical manual.
	ISO 7000-1641 (2004-01)	Operator's manual: operating instructions

⚠ DANGER

Do not store or use gasoline or other flammable vapors and liquids in the vicinity of this or any other appliance.

⚠ WARNING

RISK OF FIRE OR EXPLOSION

If the information in this manual is not followed exactly, a fire or explosion may result causing property damage, personal injury or loss of life.

Do not store or use gasoline or other flammable vapors and liquids in the vicinity of this or any other appliance.

WHAT TO DO IF YOU SMELL GAS

- Do not try to light any appliance.
- Do not touch any electrical switch; do not use any phone in your building.
- Leave the building immediately.
- Immediately call your gas supplier from a neighbor's phone. Follow the gas supplier's instructions.
- If you cannot reach your gas supplier, call the fire department.

Installation and service must be performed by a qualified installer, service agency or the gas supplier.

⚠ AVERTISSEMENT

RISQUE D´INCENDIE OU D´EXPLOSION

Si les consignes de sécurité ne sont pas suivies à la lettre, cela peut entraîner la mort, de graves blessures ou des dommages matériels.

Ne pas entreposer ni utiliser d´essence ni autres vapeurs ou liquides inflammables à proximité de cet appareil ou de tout autre appareil.

QUE FAIRE SI UNE ODEUR DE GAZ EST DÉTECTÉE

- Ne mettre en marche aucun appareil.
- Ne toucher aucun interrupteur électrique; ne pas utiliser de téléphone dans le bâtiment.
- Quitter le bâtiment immédiatement.
- Appeler immédiatement le fournisseur de gaz en utilisant le téléphone d´un voisin. Suivre les instructions du fournisseur de gaz.
- Si le fournisseur de gaz n´est pas accessible, appeler le service d´incendie.

L´installation et l´entretien doivent être effectués par un installateur ou une entreprise d´entretien qualifié, ou le fournisseur de gaz.

⚠ WARNING

CARBON-MONOXIDE POISONING HAZARD

Failure to follow instructions could result in severe personal injury or death due to carbon-monoxide poisoning, if combustion products infiltrate into the building.

Check that all openings in the outside wall around the vent (and air intake) pipe(s) are sealed to prevent infiltration of combustion products into the building.

Check that furnace vent (and air intake) terminal(s) are not obstructed in any way during all seasons.

⚠ AVERTISSEMENT

RISQUE D'INTOXICATION AU MONOXYDE DE CARBONE

Si ces directives ne sont pas suivies, cela peut entraîner des blessures graves ou une intoxication au monoxyde de carbone pouvant causer la mort, si des produits de combustion s'infiltrent dans le bâtiment.

Vérifier que toutes les ouvertures pratiquées dans le mur extérieur autour du ou des tuyaux d'évent (et de la prise d'air) sont scellées de manière à empêcher l'infiltration de produits de combustion dans le bâtiment.

Veiller à ce que la ou les sorties de l'évent de l'appareil de chauffage (et la prise d'air) ne soient, en aucune façon, obstruées, quelle que soit la saison.

⚠ WARNING

ELECTRICAL SHOCK HAZZARD

Failure to follow this warning could result in personal injury or death.

Before performing installation, service, or maintenance on this unit, turn off the main power disconnect to the unit and install lock and lockout tag. Some equipment may have multiple power disconnects.

⚠ ADVERTISSEMENT

RISQUE DE CHOC ÉLECTRIQUE

Le non-respect de cet avertissement pourrait entraîner des blessures corporelles, voire la mort.

Avant d'effectuer l'installation, l'entretien ou la maintenance de cet appareil, coupez l'alimentation principale de l'appareil et installez des verrous et des étiquettes de verrouillage. Certains équipments peuvent avoir plusieurs alimentations de courant.

⚠ WARNING

This equipment is not intended for use by persons (including children) with reduced physical, sensory, or mental capabilities, or lack of experience and knowledge, unless they have been given supervision or instruction concerning use of the appliance by a person responsible for their safety. Children should be supervised to ensure that they do not play with the appliance.

⚠ ADVERTISSEMENT

Cet équipement n'est pas destiné à être utilisé par des personnes (y compris des enfants) ayant des capacités physiques, sensorielles ou mentales réduites, ou un manque d'expérience et de connaissances, à moins qu'elles n'aient reçu une supervision ou des instructions concernant l'utilisation de l'appareil par une personne responsable de leur sécurité. Les enfants doivent être surveillés pour s'assurer qu'ils ne jouent pas avec l'appareil.

⚠ CAUTION

PERSONAL INJURY HAZARD

Failure to follow this caution may result in personal injury.

Sheet metal parts may have sharp edges or burrs. Use care and wear appropriate protective clothing, safety glasses and gloves when handling parts and servicing air conditioning equipment.

⚠ ADVERTISSEMENT

RISQUE DE BLESSURE CORPORELLE

Le non-respect de cette mise en garde peut entraîner des blessures corporelles.

Les pièces en tôle peuvent présenter des bords tranchants ou des bavures. Soyez prudent et portez des vêtements de protection appropriés, des lunettes de sécurité et des gants lors de la manipulation des pièces et de l'entretien des équipements de climatisation.

UNIT ARRANGEMENT AND ACCESS

General

Figures 1 and 2 show general unit arrangement and access locations.

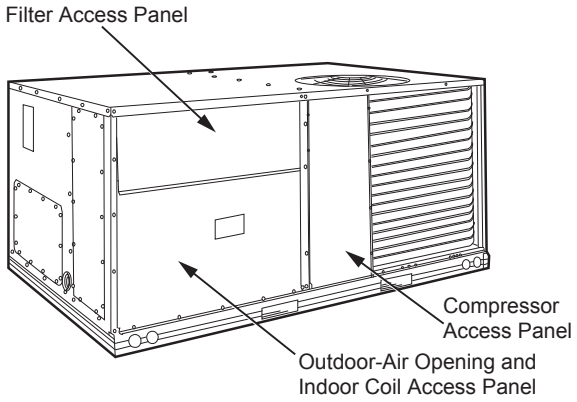

Fig. 1 — Typical Access Panel Locations

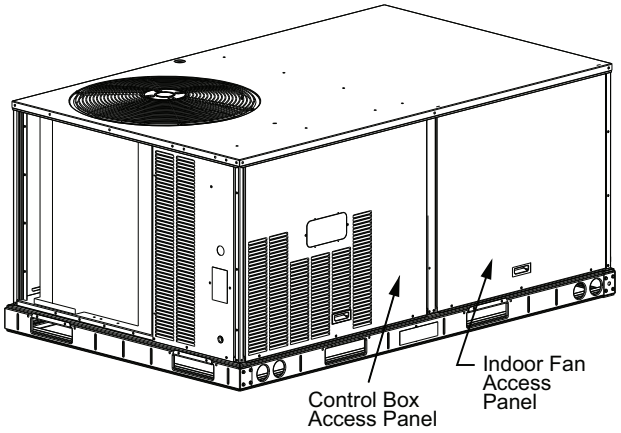

Fig. 2 — Blower Access Panel Location

Servicing

Prior to, and during the work being performed on a unit containing A2L refrigerant, the area must be checked with an appropriate refrigerant detector to ensure that the person or persons performing work are aware of a potentially toxic or flammable atmosphere. The area must also be surveyed to ensure there are no flammable hazards or ignition risks. “No Smoking” signs shall be displayed.

Should any hot work need to be performed on the refrigerant system, or associated parts, appropriate fire extinguishing equipment shall be available nearby. Have a dry powder or CO_2 fire extinguisher adjacent to the charging area.

All maintenance staff and others working in the local area shall also be instructed on the nature of work being carried out. Work in confined spaces shall be avoided wherever possible.

Routine Maintenance

These items should be part of a routine maintenance program, to be checked every month or 2, until a specific schedule for each can be identified for this installation:

QUARTERLY INSPECTION
(AND 30 DAYS AFTER INITIAL START)

- Return air filter replacement
- Outdoor hood inlet filters cleaned
- Condenser coil cleanliness checked
- Condensate drain checked

SEASONAL MAINTENANCE

These items should be checked at the beginning of each season (or more often if local conditions and usage patterns dictate):

Air Conditioning

- Ensure outdoor fan motor mounting bolts are tight
- Ensure compressor mounting bolts are tight
- Inspect outdoor fan blade positioning
- Ensure control box is clean
- Check control box wiring condition
- Ensure wire terminals are tight
- Check refrigerant charge level
- Ensure indoor coils are clean
- Check supply blower motor amperage

Electric Heating

- Inspect power wire connections
- Ensure fuses are operational
- Ensure manual reset limit switch is closed

Economizer or Outside Air Damper

- Check inlet filters condition
- Check damper travel (economizer)
- Check gear and dampers for debris and dirt

Air Filters and Screens

Each unit is equipped with return air filters. If the unit has an economizer, it will also have an outside air screen. If a manual outside air damper is added, an inlet air screen will also be present.

Each of these filters and screens will need to be periodically replaced or cleaned.

Filters

RETURN AIR FILTERS

⚠ CAUTION

EQUIPMENT DAMAGE HAZARD

Failure to follow this CAUTION can result in premature wear and damage to equipment.

DO NOT OPERATE THE UNIT WITHOUT THE RETURN AIR FILTERS IN PLACE.

Dirt and debris can collect on heat exchangers and coils possibly resulting in a small fire. Dirt buildup on components can cause excessive current used resulting in motor failure.

Return air filters are disposable fiberglass media type. Access to the filters is through the small lift-out panel located on the rear side of the unit, above the evaporator/return air access panel. (See Fig. 3.)

To remove the filters:

1. Grasp the bottom flange of the upper panel.
2. Lift up and swing the bottom out until the panel disengages and pulls out.
3. Reach inside and extract the filters from the filter rack.
4. Replace these filters as required with similar replacement filters of same size.

To re-install the access panel:

1. Slide the top of the panel up under the unit top panel.
2. Slide the bottom into the side channels.
3. Push the bottom flange down until it contacts the top of the lower panel (or economizer top).

OUTSIDE AIR HOOD

Outside air hood inlet screens are permanent aluminum-mesh type filters. Check these for cleanliness. Remove the screens when cleaning is required. Clean by washing with hot low-pressure water and soft detergent and replace all screens before restarting the unit. Observe the flow direction arrows on the side of each filter frame.

ECONOMIZER INLET AIR SCREEN

This air screen is retained by filter clips under the top edge of the hood. (See Fig. 3.)

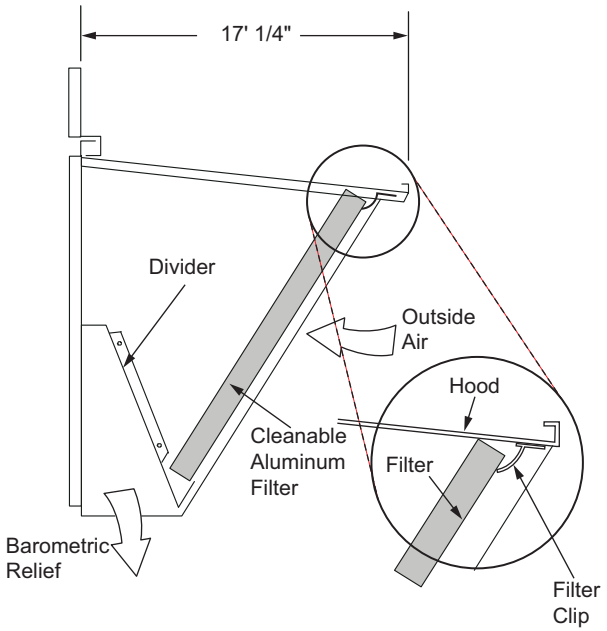

Fig. 3 — Filter Installation

To remove the filter, open the filter clips. Re-install the filter by placing the frame in its track, then closing the filter clips.

MANUAL OUTSIDE AIR HOOD SCREEN

This inlet screen is secured by a retainer angle across the top edge of the hood. (See Fig. 4.)

To remove the screen, loosen the screws in the top retainer and slip the retainer up until the filter can be removed. Re-install by placing the frame in its track, rotating the retainer back down, and tightening all screws.

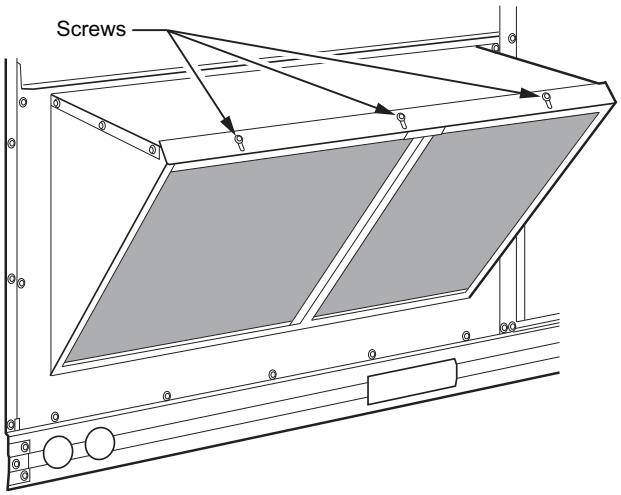

Fig. 4 — Screens Installed on Outdoor-Air Hood

SUPPLY FAN (BLOWER) SECTION

⚠ WARNING

ELECTRICAL OPERATION HAZARD

Failure to follow this warning could result in personal injury or death.

Before performing service or maintenance operations on unit, LOCKOUT/TAGOUT the main power switch to unit. Electrical shock and rotating equipment could cause severe injury.

All low-voltage wiring should be routed through the provided raceway built into the corner post of the unit or secured to the unit control box with the electrical conduit in order to provide UL-required clearance between high and low-voltage wiring.

Supply Fan (Direct-Drive)

All 50FEQ units have the EcoBlue™ direct drive vane axial fan system. The fan is driven by an ECM motor with speed that is user set through the Unit Control Board (UCB). Speeds are fully configurable from 40% to 100% of the motor's maximum speed. See Fig. 5 and 6.

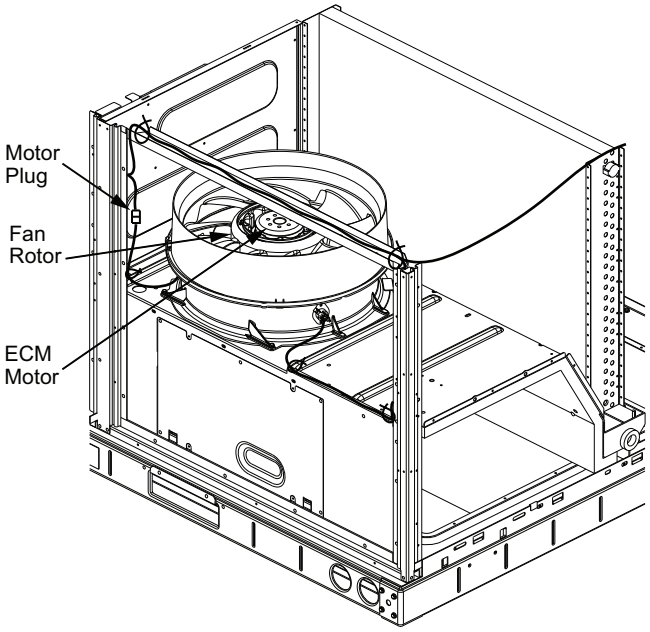

Fig. 5 — Direct-Drive Supply Fan Assembly

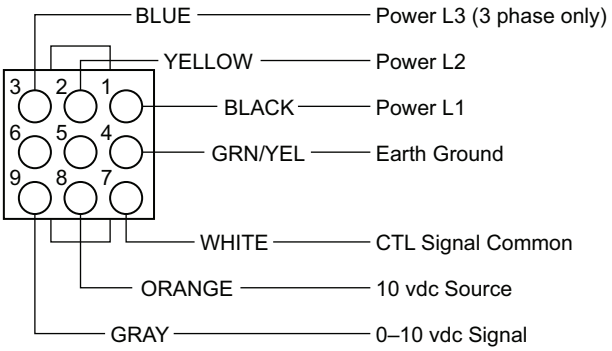

Fig. 6 — ECM Motor Plug Connectors

EVALUATING MOTOR SPEED

The direct drive ECM blower motor uses a constant speed design. Motor speed is controlled by a 0-10 vdc signal, where 10 vdc is equal to the motor's maximum rpm.

SELECTING FAN SPEED

All units come factory set for 9.0 vdc or approximately 90% of the motor's maximum speed. Fan speed should be set per job specification cfm (cubic feet per minute) and ESP (external static pressure) required and per Fan Speed Set Up label included on the unit's high voltage cover. In some cases, the Fan Speed Set Up label may already include the field setting if unit was previously installed. Check the box on the lower half of the label to see if the field voltage setting was filled in and if so, set fan speed to that voltage. Otherwise see detailed instructions below.

NOTE: Fan Speed Set Up is for full load airflow. If the unit has multiple stages of cooling, low cool and ventilation may operate at lower fan rpms. This offset is factory set and controlled by the UCB. If fan speed verification is being done with a strobe, fan speed should be verified in all unit operation modes.

Units with Electromechanical controls

The fan speed set up controls are located on the lower section of the Unit Control Board (UCB). See Fig. 7.

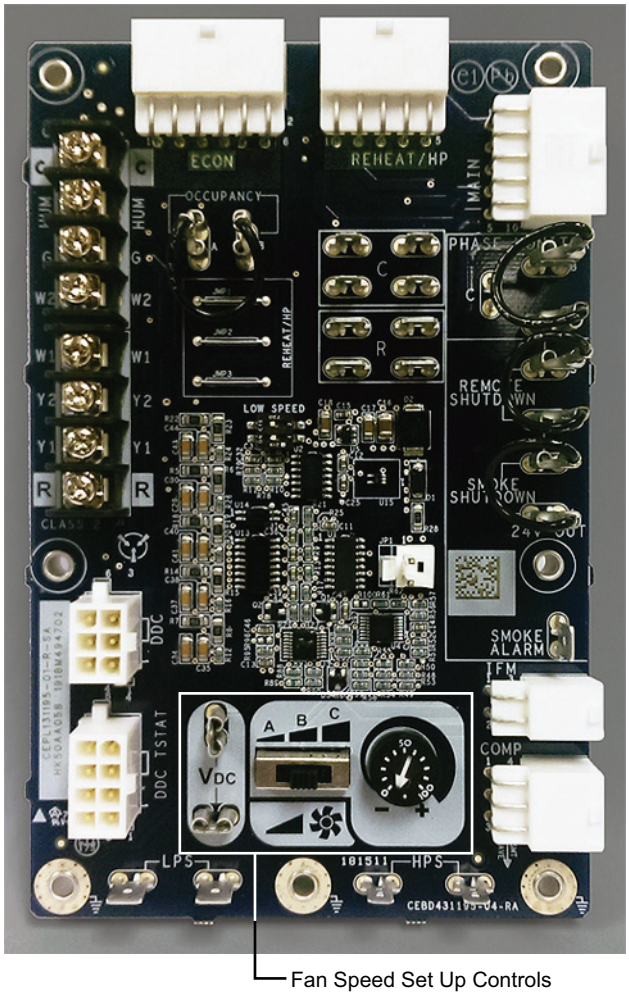

Fig. 7 — UCB Fan Speed Controls

1. Check the job specifications for the cfm (cubic feet per minute) and ESP (external static pressure) required.
2. Using the chart on the Fan Speed Set Up labels (see Fig. 8), calculate the vdc from the cfm and ESP for the base unit. Then add vdc for any accessories installed per the "Field Accessories" section of the label.

   NOTE: The Fan Speed Set Up labels are located on the High Voltage cover in the Control Box.
3. Connect a multimeter to the vdc terminals on the UCB.

4. Set the Range Switch to either A, B, or C per the Switch Range table.
5. Using a straight blade screwdriver, turn the vdc control dial to fine tune the vdc reading.
6. Record the reading in the Field Setting field.

NOTE: Fan set-up vdc is not affected by the operating stage of the unit.

Low Speed Fan Adjustment

2-Pin DIP Switch

The Low Speed 2-Pin DIP switch is located near the center of the UCB. See Fig. 7.

When replacing UCB, the board will be shipped as default without a low speed selected. To select correct 50FEQ low fan speed for 3 to 5 ton 50FEQ units, set both DIP switches to "OFF" (0). For 6 ton 50FEQ units set both DIP switches "ON" (1). See Table 1. The DIP switch positions can also be found on the unit's control label diagram.

Table 1 — Low Speed 2-Pin DIP Switch Settings

LOW SPEED		PERCENTAGE OF USER SET FAN SPEED
DIP1	DIP2	
0	0	100%
0	1	88%
1	0	75%
1	1	66%

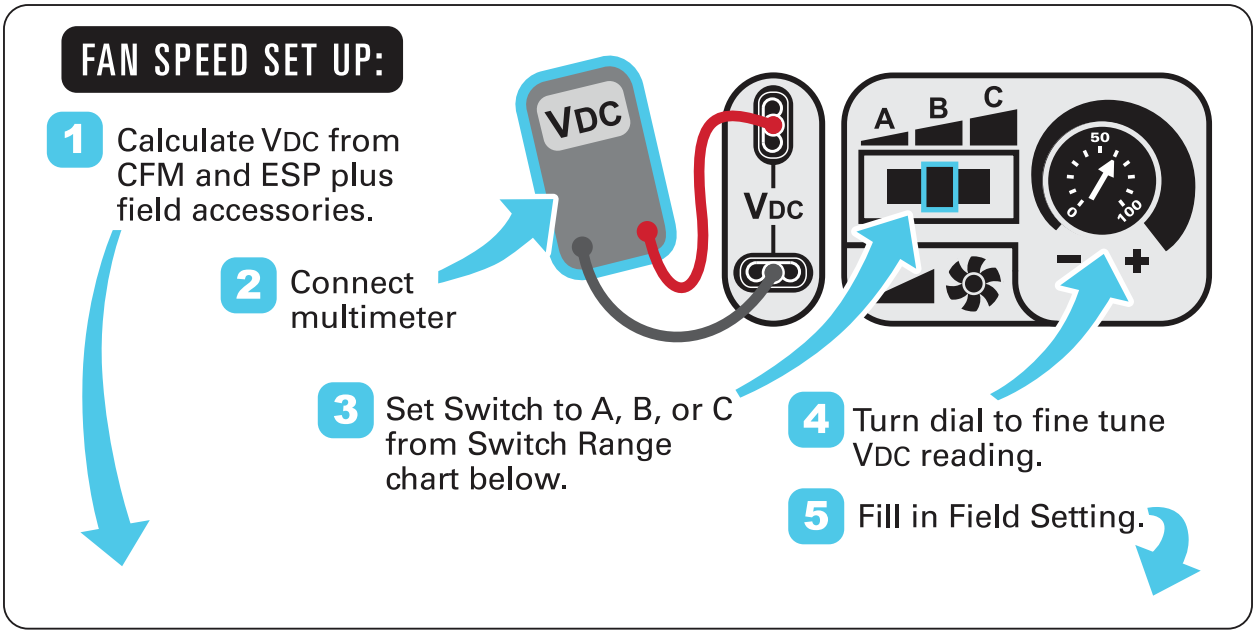

VDC Calculator

UNIT MODEL NUMBER — CFM	ESP in. wg 0.2	0.4	0.6	0.8	1.0	1.2	1.4	1.6	1.8	2.0
1500	5.4	6.2	6.9	7.5	8.1	8.6	9.1	9.6		
1625	5.8	6.5	7.1	7.7	8.3	8.8	9.3	9.8		
1750	6.1	6.8	7.4	8.0	8.5	9.0	9.5	9.9		
1875	6.5	7.1	7.7	8.2	8.7	9.2	9.7			
2000	6.8	7.4	7.9	8.5	9.0	9.5	9.9			
2125	7.2	7.7	8.2	8.7	9.2	9.7				
2250	7.6	8.0	8.5	9.0	9.5	10.0				
2375	7.9	8.4	8.8	9.3	9.8					
2500	8.3	8.7	9.2	9.6						
Field Accessories:										
Economizer	0.1	0.1	0.1	0.1	0.1	0.1	0.1	0.1		
1 Stage E Heat	0.2	0.2	0.2	0.2	0.2	0.2	0.2	0.2		
2 Stage E Heat	0.3	0.3	0.3	0.3	0.3	0.3	0.3	0.3		

Factory Setting: 9.0 VDC

Field Setting:

Record field setting here

_____ VDC

Switch Range: *

A	4.1 - 7.5
B	6.9 - 8.7
C	7.7 - 10.0

** Overlap in A, B, C switch range designed for maximum field adjustment potential. For example 7.2 can be set at either A or B.*

NOTE: Values in the Field Accessories section are vdc adders.

Fig. 8 — Example of Fan Speed Set Up Labels for Electromechanical Controls

Units with SystemVu™ controls

On units equipped with the factory-installed SystemVu controller the Fan Speed settings are accessed through the SystemVu interface.

1. Check the job specifications for the cfm (cubic feet per minute) and ESP (external static pressure) required.
2. Using the chart on the Fan Speed Set Up labels (see Fig. 9), calculate the rpm from the cfm and ESP for the base unit.
3. If installing any accessories listed at the bottom of the Set Up Label, add accessory rpm to base unit rpm in upper portion of label. For electric heaters use only one adder (e.g., 2 stage heater uses only 2 stage adder, not 1 stage plus 2 stage).

   NOTE: The Fan Speed Set Up labels are located on the High Voltage cover in the Control Box.
4. Press any key on the SystemVu interface to activate the display backlight and then press the MENU key.
5. Using the UP and DOWN arrow keys highlight SETTINGS and then press ENTER.
6. Use the DOWN arrow key highlight the UNIT CONFIGURATIONS menu then press ENTER.
7. Highlight UNIT CONFIGURATIONS then press ENTER.
8. Highlight INDOOR FAN and then press ENTER.
9. Refer to the job specifications to set the following, determining the values per the rpm Calculator label (see Fig. 9). Use the UP and DOWN arrow keys and the BACK key to set the values. Press ENTER after setting each value to continue to the next selection.

- IDF VENT SPD
- IDF HEAT SPD
- IDF LOW COOL SPD
- IDF HIGH SPD
- IDF FREE COOL SPD

For further details see the *50FEQ 04-30, 50GEQ 04-28, 48QE 04-28 Single Package Rooftop Units with SystemVu™ Controls Version X.X and Puron Advance™ (R-454B) Refrigerant, Controls, Start-Up, Operation and Troubleshooting* manual.

SystemVu™

FAN SPEED SETUP (RPM)

MAIN MENU:

SETTINGS
→ UNIT CONFIGURATIONS
→ INDOOR FAN
→ IDF VENT SPD -RPM
→ IDF HEAT SPD -RPM
→ IDF HIGH COOL SPD -RPM
→ IDF FREE COOL SPD -RPM

↓ DETERMINE RPM FROM BELOW ↓

48TC003136 REV. A

RPM Calculator

UNIT MODEL NUMBER / CFM	ESP in. wg 0.2	0.4	0.6	0.8	1.0	1.2	1.4	1.6	1.8	2.0
1500	1301	1477	1639	1788	1925	2054	2174	2289		
1625	1381	1544	1699	1843	1976	2101	2220	2332		
1750	1463	1615	1763	1902	2031	2152	2268	2378		
1875	1548	1688	1828	1962	2087	2206	2318			
2000	1633	1764	1897	2025	2146	2262	2372			
2125	1720	1842	1967	2090	2208	2320				
2250	1808	1921	2040	2157	2271	2380				
2375	1897	2003	2115	2227	2336					
2500	1987	2068	2191	2298						
Field Accessories:										
Economizer	66	66	66	66	66	66	66	66		
1 Stage E Heat	80	80	80	80	80	80	80	80		
2 Stage E Heat	107	107	107	107	107	107	107	107		

NOTE: Values in the Field Accessories section are vdc adders.

Fig. 9 — Example of Fan Speed Set Up Labels for SystemVu™ Controls

TROUBLESHOOTING THE ECM MOTOR

EcoBlue™ motors are designed with several built-in protections included in the motor software. If the motor detects a fault it will safely shut down. For temperature related faults the motor requires a line voltage reset to continue operation. For all others, the motor will resume operation automatically as soon as the fault condition is cleared. See Table 2 for a complete list.

Table 2 — Fault Condition/Reset Trigger

FAULT CONDITION	RESET TRIGGER	DESCRIPTION
Phase Failure	Automatic	One phase is missing or imbalanced. In this case the motor will come to a stop and then automatically restart when all phases are present.
Locked/ Blocked Rotor	Automatic	The rotor is blocked. Once the locking mechanism has been removed, the motor will automatically restart.
Motor Overheated	Manual	The motor will stop in the event the motor overheats. In this case there has to be a manual restart.
Power Module Overheated	Manual	The motor will stop in the event the electronics overheat. In this case there has to be a manual restart.
Line under-voltage	Automatic	Once the line voltage returns within permitted operating range, the fan will automatically restart.
Communication Error	Automatic	Internal communication error of the fan's electronics. The fan will restart automatically, if error is cleared.

Troubleshooting the motor requires a voltmeter.

1. Disconnect main power to the unit.
2. Disconnect motor plug in supply section of the unit.
3. Restore main unit power.
4. Check for proper line voltage at motor power leads Black (PL1-1), Yellow (PL1-2), and Blue (PL1-3). Blue is only present on 3-phase motors. See the following table.

50FEQ UNIT VOLTAGE	MOTOR VOLTAGE	MINIMUM-MAXIUMUM VOLTS
208/230	230	190-250
460	230	210-250
575	460	420-500

5. Disconnect main power.
6. Reconnect motor plug in supply section of unit.
7. Restore main power.
8. Check for proper motor control voltage signal of 9.7 vdc to 10.3 vdc at IFM-1 and IFM-3 on Unit Control Board (UCB). See Fig. 10.
9. Using a jumper wire from unit control terminals R to G, engage motor operation.
10. Verify control signal from user speed selection switch by placing voltmeter taps in provided terminals marked vdc. Signal should be between 3.8 vdc and 10.3 vdc.
11. If the motor does not start and run, remove the fan assembly and replace the motor with one having the same part number. Do not substitute with an alternate design motor as the voltage/speed programming will not be the same as that on an original factory motor.

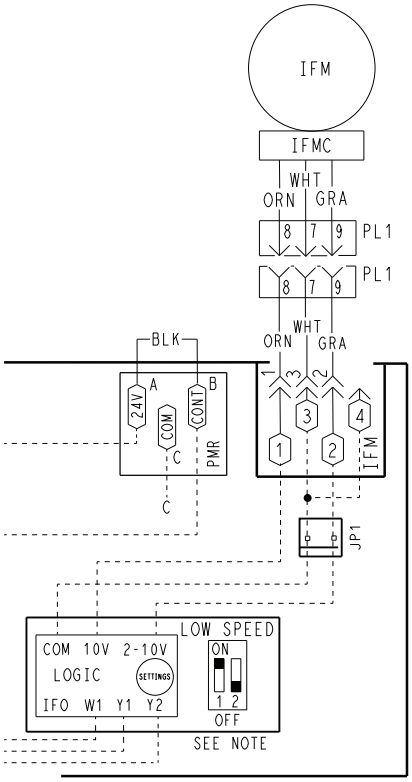

NOTE: 2-PIN LOW SPEED DIP SWITCH POSITIONS ARE FACTORY SET AS SHOWN.

Fig. 10 — Supply Fan Control Wiring Diagram

Removing the Motor and Fan Assembly

NOTE: Due to press fit design of composite Rotor on Motor, it is highly recommended that any time a motor is replaced the fan rotor is replaced as well. The rest of the assembly may be reused.

See Fig. 11.

1. Unplug motor harness from control box harness and cut wire tie at the fan deck.
2. Unplug connectors from stator temperature limit switch.
3. Remove 2 screws at front of stator on fan deck.
4. Slide fan assembly forward a couple of inches to clear rear brackets and lift assembly out.

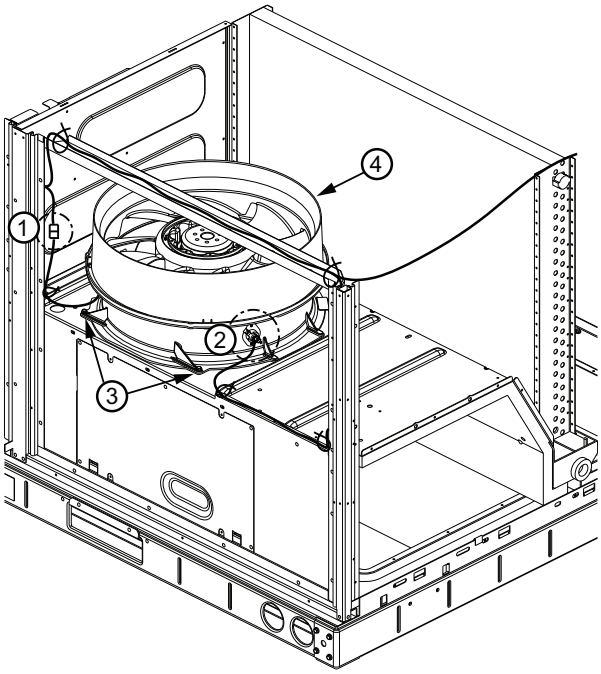

Fig. 11 — Fan Assembly Removal

Disassembling Motor and Fan Assembly

See Fig. 12.

1. Remove 6 screws from retaining rings in the top of the fan rotor.
2. Remove rotor from motor.
3. Remove 4 screws connecting motor to stator flange.
4. Remove stator from motor.
5. If required, remove stator limit switch on stator.
6. Remove 3 screws from the heat shield. Retain the heat shield if a new heat shield has not been ordered.

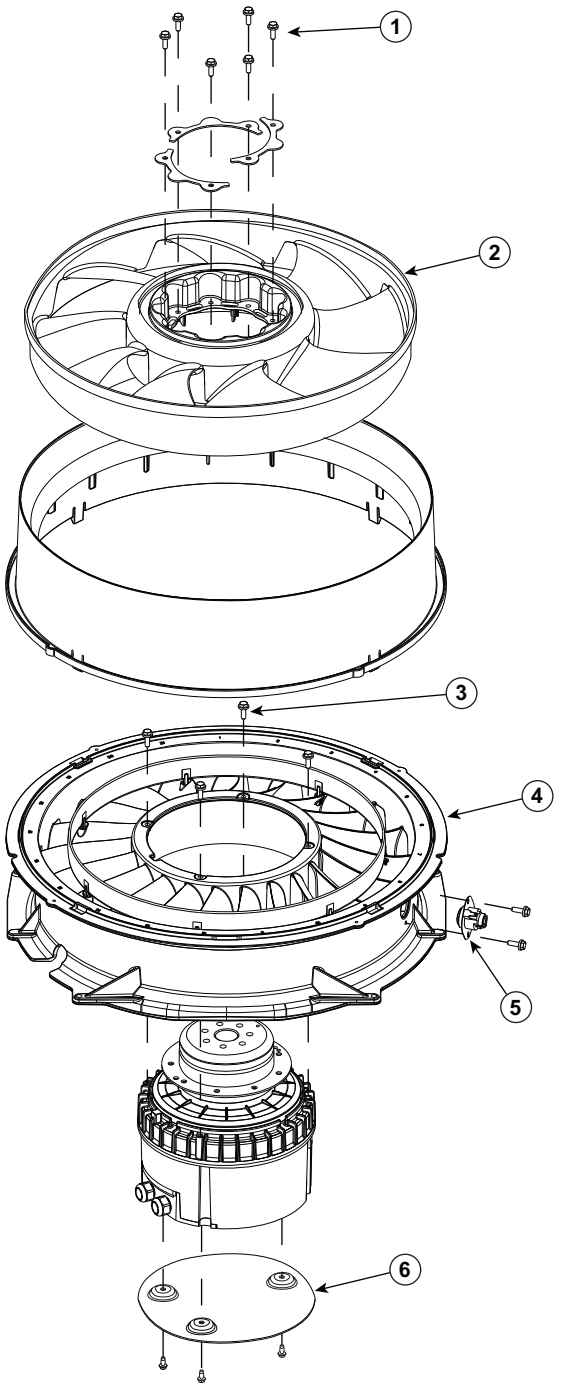

Fig. 12 — Disassembling Motor and Fan Assembly

Reassembly of Motor and Fan Assembly

See Fig. 13.

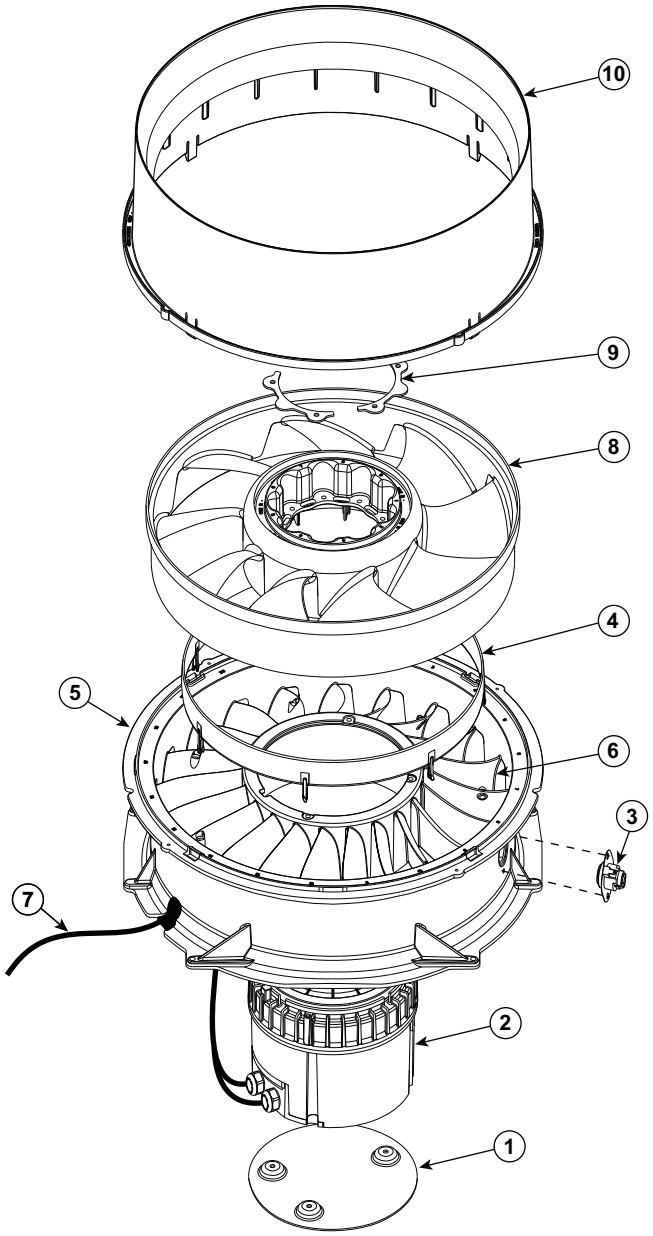

Fig. 13 — Fan System Re-Assembly

1. Install heat shield on motor with 3 no. 8-32 x 3/8 in. thread cutting screws (P/N: AK92AB100). Tighten to 30 in.-lb (3.39 Nm).
2. Place motor on flat surface.
3. If required, install stator limit switch on stator with 2 no. 10 x 5/8 in. hex head screws (P/N: AL48AM217). Tighten to 50 in.-lb (5.65 Nm).
4. If required, insert composite ring into stator where pegs match up with holes.
5. Line up rectangle key way in the center of stator with rectangle feature on motor and set stator onto motor.
6. Install 4 no. 10-32 x 1/2 in. hex head machine screws (P/N: AD07AB126) to connect stator to motor. Tighten to 23 in.-lb (2.6 Nm).
7. Fit grommet on motor wire harness into keyhole feature on the side of the stator and pull wire harness out through grommet.

8. Install rotor on motor by lining up one of 9 holes on composite rotor with one of 9 holes on motor flange. This can be done by adjusting motor and the top of the motor hub and aligning using a 3/16 in. Allen key or similar pin. Press fan rotor down until it is flush with the motor flange.
9. Set retaining rings (x3) into composite rotor and install 6 no. 10-32 x 1/2 in. hex head machine screws (P/N: AD07AB126) through the holes in retaining rings. Tighten to 23 in.-lb (2.6 Nm). It is recommended this screw installation be done in a star pattern.
10. Align tabs of composite casing with rectangular cutouts on top of stator and snap into place.
11. Final assembly should have a small clearance between top of plastic rotor and underside of casing lip. Spin rotor by hand to ensure no contact or rubbing between these 2 parts.

Reinstalling Motor and Fan Assembly

See Fig. 14.

1. Align motor harness/grommet at ~7 o'clock (facing installer) and align the bottom flats on right and left sides of fan stator with fan deck ribs. Drop fan assembly down into fan deck opening and slide back until stator is under the rear fan deck brackets.
2. Align (if necessary) 2 front holes and fasten stator to fan deck with 2 no. 10 x 5/8 in. hex head screws (P/N: AL48AM217). Tighten to 50 in.-lb (5.65 Nm).
3. Reconnect wires for stator temperature limit switch.
4. Pull motor harness tight through grommet and plug it in to the control box harness and secure in the corner with snap-in wire tie.

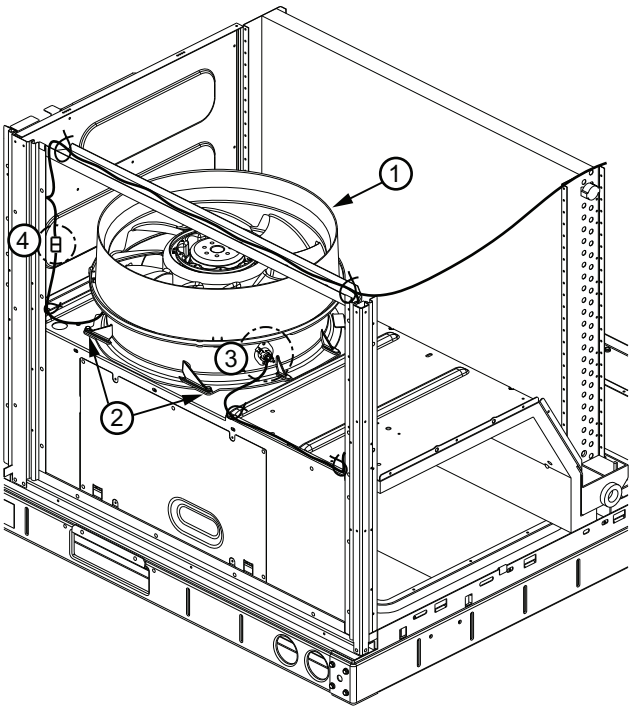

Fig. 14 — Fan Assembly Install

Staged Air Volume

All 50FEQ*07 units with EcoBlue™ technology come factory set to automatically adjust the indoor fan motor speed in sequence with the unit's ventilation, cooling, and heating operation. When the first stage of cooling is requested, unit fan will operate at 66% of the user set full load airflow. When the second stage of cooling is required, UCB will allow the full design airflow rate for the unit (100%). During the heating mode, the unit will allow total design airflow rate (100%). During ventilation mode, the fan will operate at 66% speed.

See Table 1 on page 7 for 2-Pin DIP switch settings.

COOLING

⚠ WARNING

UNIT OPERATION AND SAFETY HAZARD

Failure to follow this warning could cause personal injury, death and/or equipment damage.

R-454B is an A2L refrigerant. All service equipment or components must be A2L refrigerant rated. Do not use non-A2L rated equipment or components on R-454B refrigerant equipment.

Condenser Coil (Outdoor)

The condenser coil is fabricated with round tube copper hairpins and plate fins of various materials and/or coatings (see Model Number Nomenclature on page 65 to identify the materials provided in this unit). The coil may be one-row or composite-type 2-row. Composite 2-row coils are 2 single-row coils fabricated with a single return bend end tubesheet.

Evaporator Coil (Indoor)

The evaporator coil is traditional round-tube, plate-fin technology. Tube and fin construction is of various optional materials and coatings (see Model Number Nomenclature on page 65). Coils are multiple-row.

Condenser Coil Maintenance and Cleaning Recommendation

Routine cleaning of coil surfaces is essential to maintain proper operation of the unit. Elimination of contamination and removal of harmful residues will greatly increase the life of the coil and extend the life of the unit. The following maintenance and cleaning procedures are recommended as part of the routine maintenance activities to extend the life of the coil.

REMOVE SURFACE LOADED FIBERS

Surface loaded fibers or dirt should be removed with a vacuum cleaner. If a vacuum cleaner is not available, a soft non-metallic bristle brush may be used. In either case, the tool should be applied in the direction of the fins. Coil surfaces can be easily damaged (fin edges can be easily bent over and damage to the coating of a protected coil) if the tool is applied across the fins.

NOTE: Use of a water stream, such as a garden hose, against a surface loaded coil will drive the fibers and dirt into the coil. This will make cleaning efforts more difficult. Surface loaded fibers must be completely removed prior to using low velocity clean water rinse.

PERIODIC CLEAN WATER RINSE

A periodic clean water rinse is very beneficial for coils that are applied in coastal or industrial environments. However, it is very important that the water rinse is made with a very low velocity water stream to avoid damaging the fin edges. Monthly cleaning as described below is recommended. Rinsing coils in the opposite direction of airflow is recommended.

ROUTINE CLEANING OF COIL SURFACES

Periodic cleaning with Totaline® environmentally balanced coil cleaner is essential to extend the life of coils. This cleaner is available from Replacement Components Division as part number P902-0301 for a one gallon container, and part number P902-0305 for a 5 gallon container. It is recommended that all coils, including standard aluminum, pre-coated, copper/copper or e-coated coils be cleaned with the Totaline environmentally balanced coil cleaner as described below. Coil cleaning should be part of the unit's regularly scheduled maintenance procedures to ensure long life of the coil. Failure to clean the coils may result in reduced durability in the environment.

Avoid use of:

- coil brighteners
- acid cleaning prior to painting
- high pressure washers
- poor quality water for cleaning

Totaline environmentally balanced coil cleaner is nonflammable, hypo-allergenic, non-bacterial, and a USDA accepted biodegradable agent that will not harm the coil or surrounding components such as electrical wiring, painted metal surfaces, or insulation. Use of non-recommended coil cleaners is strongly discouraged since coil and unit durability could be affected.

Clean coil as follows:

1. Turn off unit power, tag disconnect.
2. Remove all screws from the top panel except the screws securing the condenser fan to the top panel. See Fig. 15.

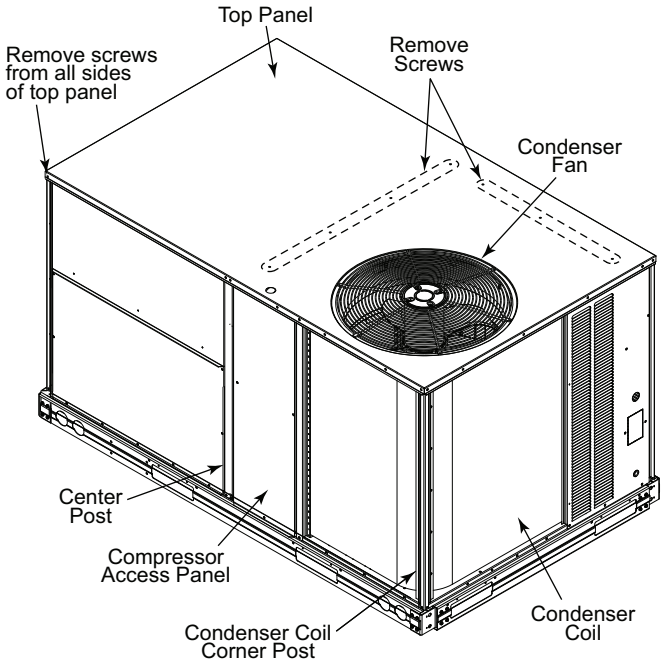

Fig. 15 — Location of Screws and Coil Corner Post

3. Lift and rotate the top panel at the condenser fan end and rotate the panel 90 degrees. Support the top panel so it remains level while resting on the condenser fan as shown in Fig. 16.

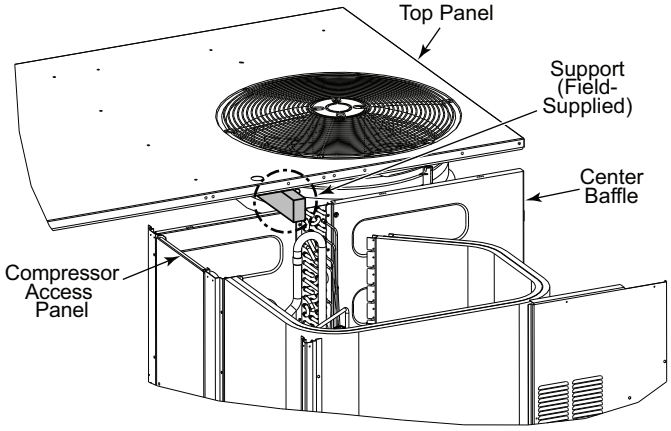

Fig. 16 — Top Panel Position

4. Remove the compressor access panel to access the lower coil clip. The condenser coil corner post may also be removed.
5. Remove the screws from both sides of the upper and lower coil retaining clips on the hairpin end of the coil tube sheets. See Fig. 17.

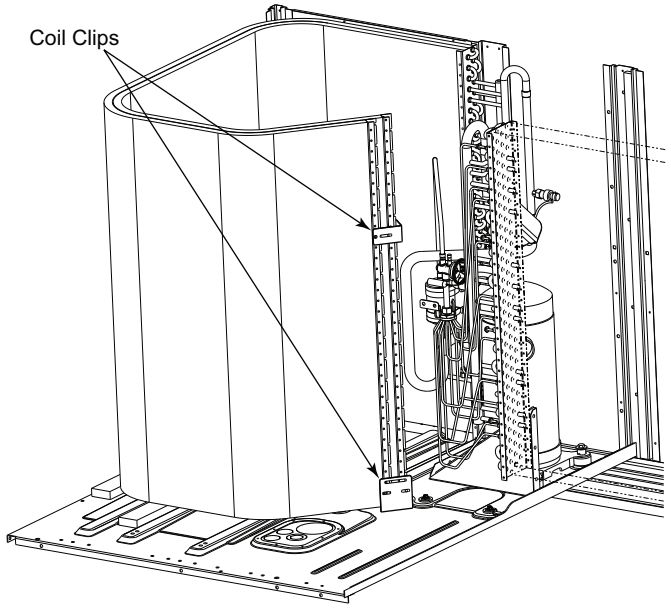

Fig. 17 — Condenser Coil Clips

6. Remove the upper and lower retaining clips.
7. Draw the inner coil inward to separate the coils for cleaning.
8. Insert a spacer (field-supplied) between the tube sheets to hold the coils apart. See Fig. 18.

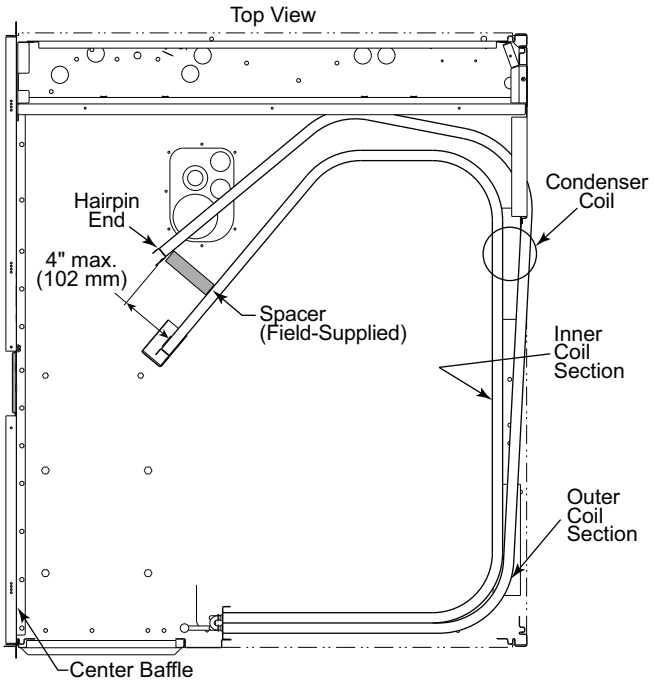

Fig. 18 — Separating Coil Sections

9. Clean the outer coil surface to remove surface loaded fibers or dirt. See "Remove Surface Loaded Fibers" on page 11 for details.
10. Use a water hose or other suitable equipment to flush down between the 2 coil sections to remove dirt and debris. If a coil cleaner is used be sure to rinse the coils completely before reassembly.
11. Move the inner coil back into position. Reinstall the lower and upper coil clips. Reinstall the top panel and replace all screws.

Totaline Environmentally Balanced Coil Cleaner Application Equipment

- 2-1/2 gallon garden sprayer
- Water rinse with low velocity spray nozzle

⚠ CAUTION

UNIT DAMAGE HAZARD

Failure to follow this caution may result in reduced unit performance or unit shutdown.

High velocity water from a pressure washer, garden hose, or compressed air should never be used to clean a coil. The force of the water or air jet will bend the fin edges and increase airside pressure drop.

⚠ CAUTION

UNIT DAMAGE HAZARD

Failure to follow this caution may result in accelerated corrosion of unit parts.

Harsh chemicals, household bleach or acid or basic cleaners should not be used to clean outdoor or indoor coils of any kind. These cleaners can be very difficult to rinse out of the coil and can accelerate corrosion at the fin/tube interface where dissimilar materials are in contact. If there is dirt below the surface of the coil, use the environmentally balanced coil cleaner.

Totaline Environmentally Balanced Coil Cleaner Application Instructions

1. Proper eye protection such as safety glasses is recommended during mixing and application.
2. Remove all surface loaded fibers and dirt with a vacuum cleaner as described above.
3. Thoroughly wet finned surfaces with clean water and a low velocity garden hose, being careful not to bend fins.
4. Mix Totaline environmentally balanced coil cleaner in a 2-1/2 gallon garden sprayer according to the instructions included with the cleaner. The optimum solution temperature is 100°F.

   NOTE: DO NOT USE water in excess of 130°F, as the enzymatic activity will be destroyed.
5. Thoroughly apply Totaline environmentally balanced coil cleaner solution to all coil surfaces including finned area, tube sheets, and coil headers.
6. Hold garden sprayer nozzle close to finned areas and apply cleaner with a vertical, up-and-down motion. Avoid spraying in horizontal pattern to minimize potential for fin damage.
7. Ensure cleaner thoroughly penetrates deep into finned areas. Interior and exterior finned areas must be thoroughly cleaned. Finned surfaces should remain wet with cleaning solution for 10 minutes. Ensure surfaces are not allowed to dry before rinsing. Reapply cleaner as needed to ensure 10-minute saturation is achieved.
8. Thoroughly rinse all surfaces with low velocity clean water using downward rinsing motion of water spray nozzle. Protect fins from damage from the spray nozzle.

Evaporator Coil

Cleaning the Evaporator Coil:

1. Turn unit power off. Install lockout tag. Remove evaporator coil access panel.
2. If economizer or two-position damper is installed, remove economizer by disconnecting Molex®[1] plug and removing mounting screws.
3. Slide filters out of unit.
4. Clean coil using a commercial coil cleaner or dishwasher detergent in a pressurized spray canister. Wash both sides of coil and flush with clean water. For best results, backflush toward return-air section to remove foreign material. Flush condensate pan after completion.
5. Reinstall economizer and filters.
6. Reconnect wiring.
7. Replace access panels.

Refrigeration System Components

Each heat pump refrigeration system includes a compressor, accumulator, reversing valve, dual-function outdoor coil with vapor header check valve, cooling liquid line with a filter drier and a check valve, dual-function indoor coil with a vapor header check valve, and heating liquid line with a check valve and a strainer. Unit sizes 04-06 have a single compressor-circuit. See Fig. 19 for one-stage cooling units (3 to 5 tons) or Fig. 20 for 2-stage cooling units (6 ton) and Tables 3-5 for typical unit piping schematic. Dual-function outdoor and indoor coils are designed to provide parallel coil circuits during evaporator-function operation and converging coil circuits during the condenser-function operation.

1. Third-party trademarks and logos are the property of their respective owners.

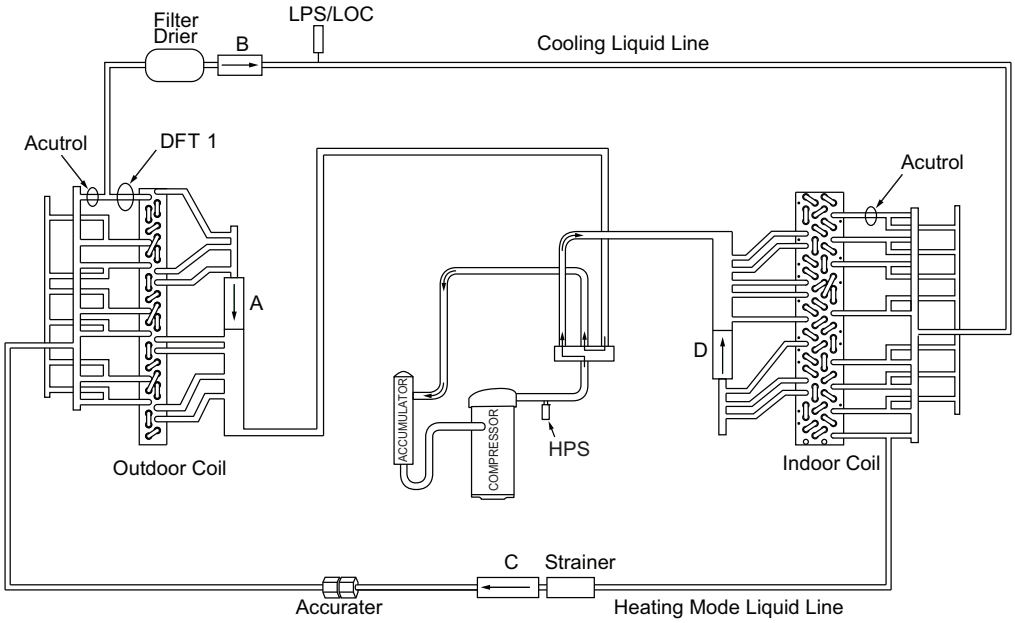

Fig. 19 — 50FEQ 04-06 Piping Schematic — One-Stage Cooling

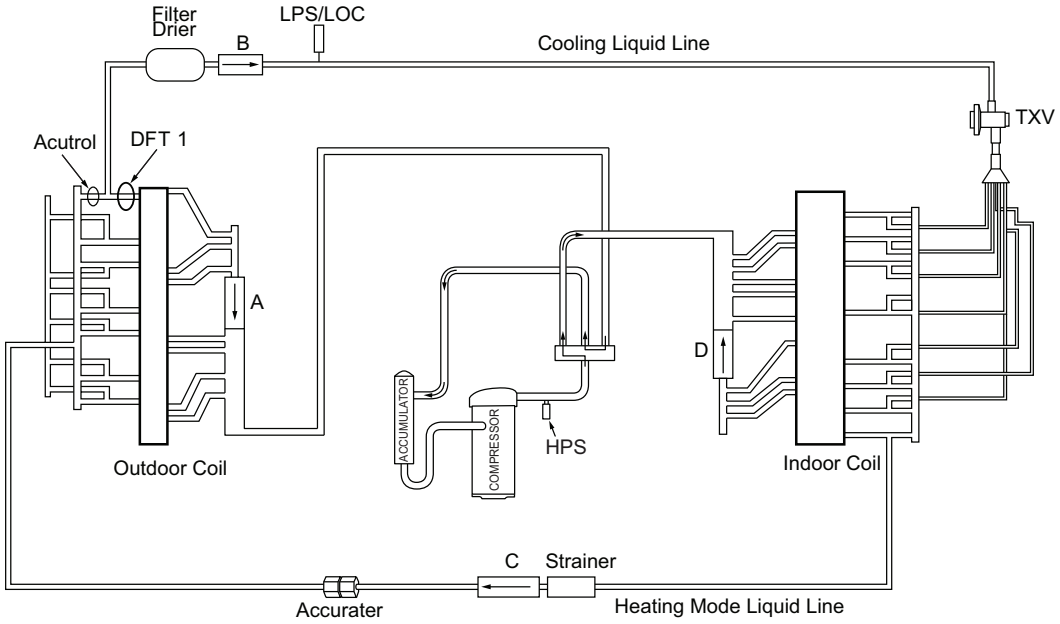

Fig. 20 — 50FEQ 07 Piping Schematic — Two-Stage Cooling, Single Circuit

Table 3 — Cooling Mode (each circuit)

COMPONENT	STATUS/POSITION
Reversing Valve	Energized
Check Valve A	Closed
Check Valve B	Open
Check Valve C	Closed
Check Valve D	Open

Table 4 — Heating Mode (each circuit)

COMPONENT	STATUS/POSITION
Reversing Valve	De-energized
Check Valve A	Open
Check Valve B	Closed
Check Valve C	Open
Check Valve D	Closed

Table 5 — Defrost Mode

COMPONENT	STATUS/POSITION
Defrost Thermostat	Closed
Outdoor Fan(s)	Off
Reversing Valve	Energized
Check Valve A	Closed
Check Valve B	Open
Check Valve C	Closed
Check Valve D	Open

Evaporator Coil Metering Devices

Two different evaporator coil metering systems are used on 50FEQ sizes 04-07. 50FEQ*04-06 units use the Acutrol system for evaporator metering. 50FEQ*07 units use a TXV-distributor system.

50FEQ UNIT SIZE	EVAPORATOR METERING
04-06	Acutrol
07	TXV

Check the unit's information data plate for Position 6 value, then compare this value to the Model Number Nomenclature on page 65 to confirm the unit's construction.

The metering devices are multiple fixed-bore devices (Acutrol) swaged into the horizontal outlet tubes from the liquid header, located at the entrance to each evaporator coil circuit path. These are non-adjustable. Service requires replacing the entire liquid header assembly.

To check for possible blockage of one or more of these metering devices, jumper R to Y1 without the G terminal jumpered, then start the compressor and observe the frosting pattern on the face of the evaporator coil. A frost pattern should develop uniformly across the face of the coil starting at each horizontal header tube. Failure to develop frost at an outlet tube can indicate a plugged or missing orifice.

THERMOSTATIC EXPANSION VALVE (TXV)

All 50FEQ*07 units include TXV control. The TXV is a bi-flow, bleed port expansion valve with an external equalizer. The TXVs are specifically designed to operate with Puron Advance™ refrigerant (R-454B). Use only factory-authorized TXVs.

TXV Operation

The TXV is a metering device that is used in air conditioning and heat pump systems to adjust to the changing load conditions by maintaining a preset superheat temperature at the outlet of the evaporator coil.

The volume of refrigerant metered through the valve seat is dependent upon the following:

1. Superheat temperature is sensed by cap tube sensing bulb on suction tube at outlet of evaporator coil. This temperature is converted into pressure by refrigerant in the bulb pushing downward on the diaphragm, which opens the valve using the push rods.
2. The suction pressure at the outlet of the evaporator coil is transferred through the external equalizer tube to the underside of the diaphragm.
3. The pin is spring loaded, which exerts pressure on the underside of the diaphragm. Therefore, the bulb pressure works against the spring pressure and evaporator suction pressure to open the valve. If the load increases, the temperature increases at the bulb, which increases the pressure on the top side of the diaphragm. This opens the valve and increases the flow of refrigerant. The increased refrigerant flow causes the leaving evaporator temperature to decrease. This lowers the pressure on the diaphragm and closes the pin. The refrigerant flow is effectively stabilized to the load demand with negligible change in superheat.

Replacing TXV

1. Recover refrigerant.
2. Remove TXV support clamp using a 5/16 in. nut driver.
3. Remove TXV using a wrench and an additional wrench on connections to prevent damage to tubing.
4. Remove equalizer tube from suction line of coil. Use file or tubing cutter to cut brazed equalizer line approximately 2 inches above suction tube.
5. Remove bulb from vapor tube inside cabinet.
6. Install the new TXV using a wrench and an additional wrench on connections to prevent damage to tubing while attaching TXV to distributor.
7. Attach the equalizer tube to the suction line. If the coil has a mechanical connection, then use a wrench and an additional wrench on connections to prevent damage. If the coil has a brazed connection, use a file or a tubing cutter to remove the mechanical flare nut from the equalizer line. Then use a new coupling to braze the equalizer line to the stub (previous equalizer line) in suction line.
8. Attach TXV bulb in the same location where the original (in the sensing bulb indent) was when it was removed, using the supplied bulb clamps. See Fig. 21.
9. Route equalizer tube through suction connection opening (large hole) in fitting panel and install fitting panel in place.
10. Sweat the inlet of TXV marked "IN" to the liquid line. Avoid excessive heat which could damage the TXV valve. Use quenching cloth when applying heat anywhere on TXV.

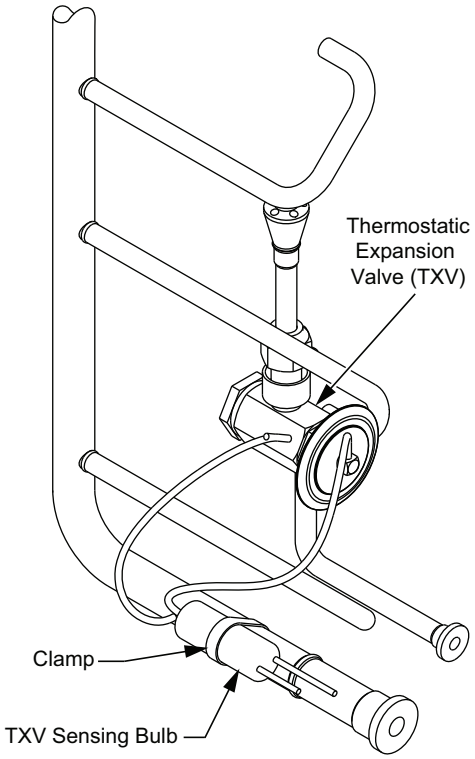

NOTE: Sensing bulb insulation removed for clarity.

Fig. 21 — TXV Valve and Sensing Bulb Location

Refrigerant System Pressure Access Ports

There are 2 access ports in the system: on the suction tube near the compressor and on the discharge tube near the compressor. These are brass fittings with black plastic caps. The hose connection fittings are standard 1/4 in. SAE male flare couplings.

The brass fittings are 2-piece high flow valves, with a receptacle base brazed to the tubing and an integral spring-closed check valve core screwed into the base. See Fig. 22. This check valve is permanently assembled into this core body and cannot be serviced separately; replace the entire core body if necessary. Service tools are available from RCD that allow the replacement of the check valve core without having to recover the entire system refrigerant charge. Apply compressor refrigerant oil to the check valve core's bottom o-ring. Install the fitting body with 96 ±10 in.-lb (10.85 ±1.1 Nm) of torque; do not over-tighten.

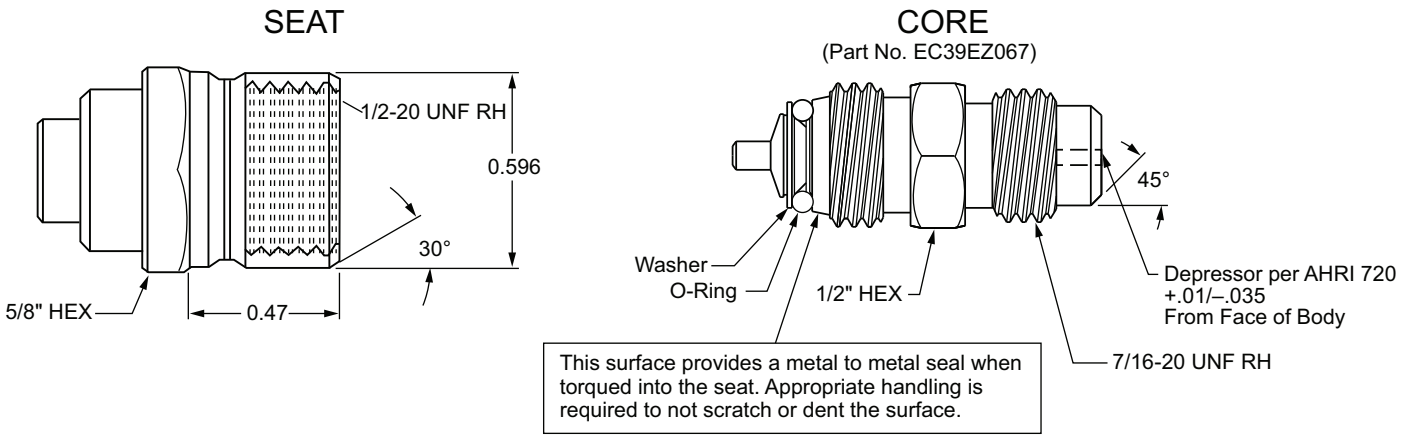

Fig. 22 — CoreMax®[1] Access Port Assembly

PURON ADVANCE™ (R-454B) REFRIGERANT

This unit is designed for use with Puron Advance (R-454B) refrigerant. Do not use any other refrigerant in this system.

Puron Advance (R-454B) refrigerant is provided in gray cylinders with a red band near the top. Pay close attention to the cylinder labels to verify that the cylinder contains the correct refrigerant. These cylinders are available with and without dip tubes; cylinders with dip tubes will have a label indicating this feature. For a cylinder with a dip tube, place the cylinder in the upright position (access valve at the top) when removing liquid refrigerant for charging. For a cylinder without a dip tube, invert the cylinder (access valve on the bottom) when removing liquid refrigerant.

Because Puron Advance (R-454B) refrigerant is a near-azeotropic blend, it is strongly recommended that refrigerant always be removed from the cylinder as a liquid. Admit liquid refrigerant into the system in the discharge line. If adding refrigerant into the suction line, use a commercial metering/expansion device at the gauge manifold; remove liquid from the cylinder, pass it through the metering device at the gauge set and then pass it into the suction line as a vapor. Do not remove Puron Advance (R-454B) refrigerant from the cylinder as a vapor. For further details see A2L REFRIGERATION INFORMATION starring on page 37.

Refrigerant Charge

Amount of refrigerant charge is listed on the unit's nameplate. Refer to *Carrier GTAC2-5 Charging, Recovery, Recycling and Reclamation* training manual and the following procedures.

In addition to conventional charging procedures, the following requirements shall be followed.

- Ensure that contamination of different refrigerants does not occur when using charging equipment. Hoses or lines shall be as short as possible to minimize the amount of refrigerant contained in them.
- Cylinders shall be kept in an appropriate position according to the instructions.
- Ensure that the refrigerating system is grounded prior to charging the system with refrigerant.
- Label the system when charging is complete (if not already).
- Extreme care shall be taken not to overfill the refrigerating system.

Prior to recharging the system, it shall be pressure-tested with the appropriate purging gas. The system shall be leak tested on completion of charging but prior to commissioning. A follow up leak test shall be carried out prior to leaving the site.

Unit panels must be in place when unit is operating during the charging procedure.

NO CHARGE

Use standard evacuating techniques. After evacuating system, weigh in the specified amount of refrigerant.

LOW-CHARGE COOLING

Using Cooling Charging Charts, Fig. 23-26, vary refrigerant until the conditions of the appropriate chart are met. Note the charging charts are different from type normally used. Charts are based on charging the units to the correct sub-cooling for the various operating conditions. Accurate pressure gauge and temperature sensing device are required. Connect the pressure gauge to the service port on the liquid line. Mount the temperature sensing device on the liquid line and insulate it so that outdoor ambient temperature does not affect the reading. Indoor-air cfm must be within the normal operating range of the unit.

50FEQ SIZE DESIGNATION	NOMINAL TONS REFERENCE
04	3
05	4
06	5
07	6

EXAMPLE:

Model	50FEQA04
Outdoor Temperature	85°F (29°C)
Suction Pressure	140 psig (965 kPa)
Suction Temperature should be	65°F (18°C)

USING COOLING CHARGING CHARTS

Take the outdoor ambient temperature and read the liquid pressure gauge. Refer to chart to determine what liquid temperature should be. If liquid temperature is low, add refrigerant. If liquid temperature is high, carefully recover some of the charge. Recheck the liquid pressure as charge is adjusted.

1. Third-party trademarks and logos are the property of their respective owners.

COOLING CHARGING CHARTS

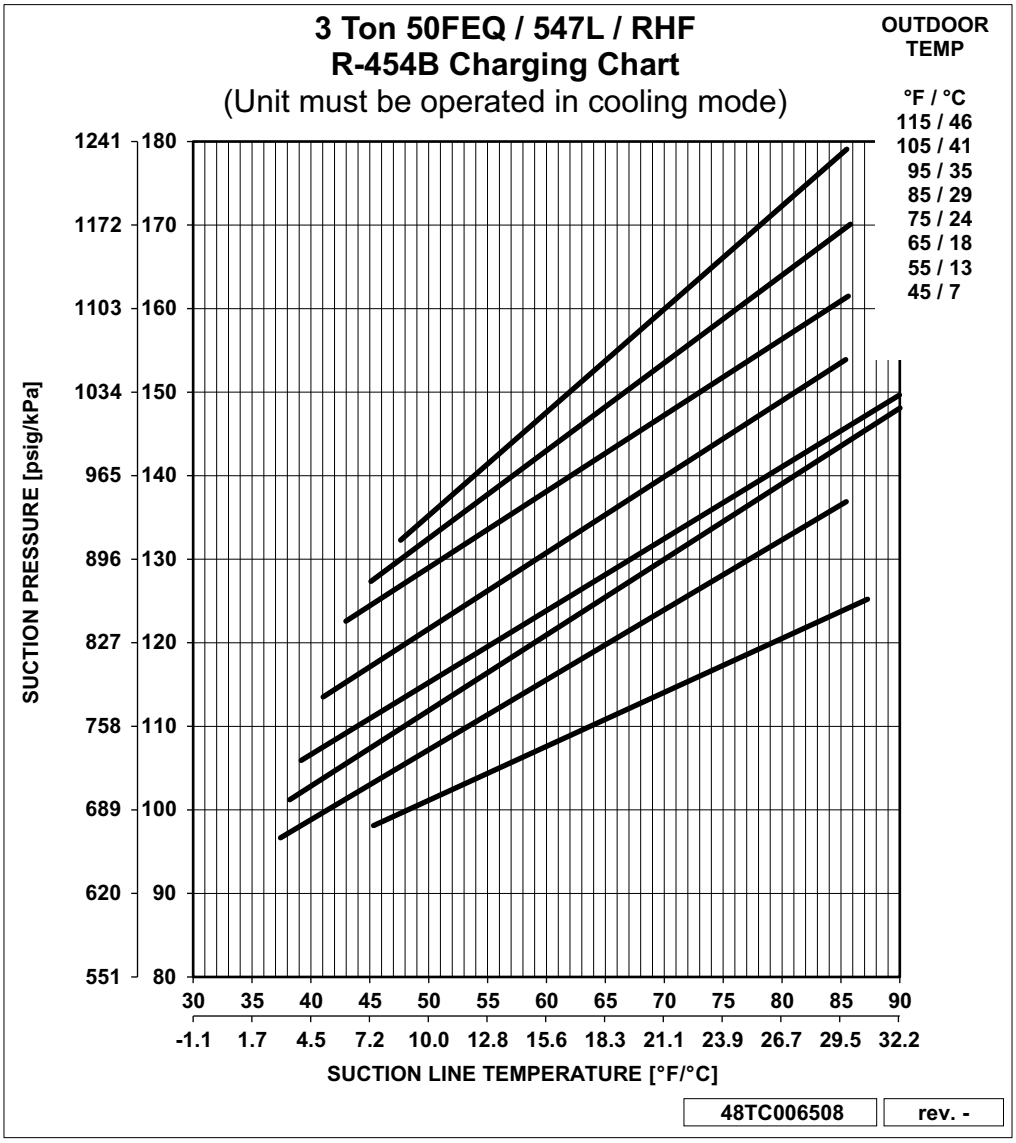

Fig. 23 — Cooling Charging Chart — 3 Ton, 50FEQA04

COOLING CHARGING CHARTS

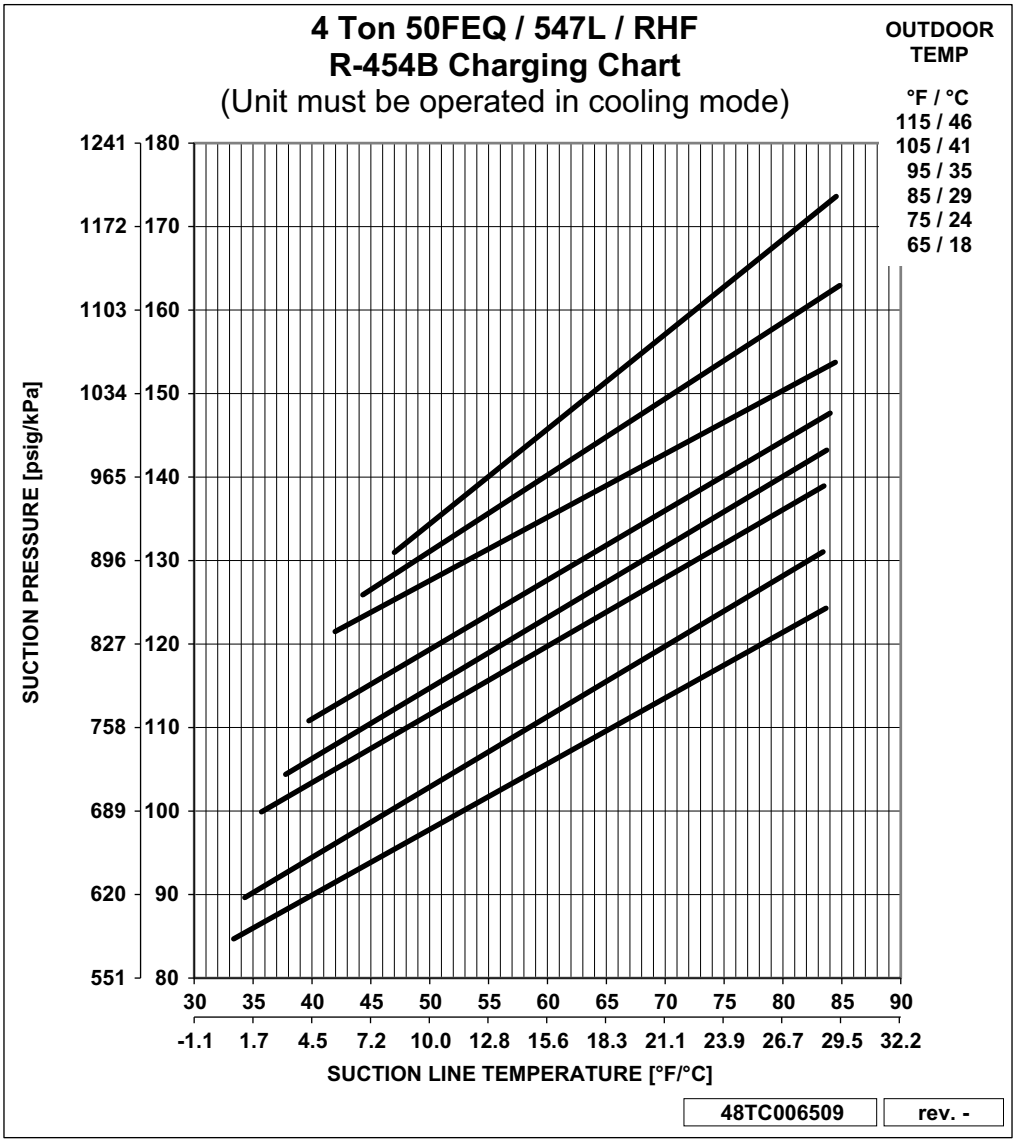

Fig. 24 — Cooling Charging Chart — 4 Ton, 50FEQA05

COOLING CHARGING CHARTS

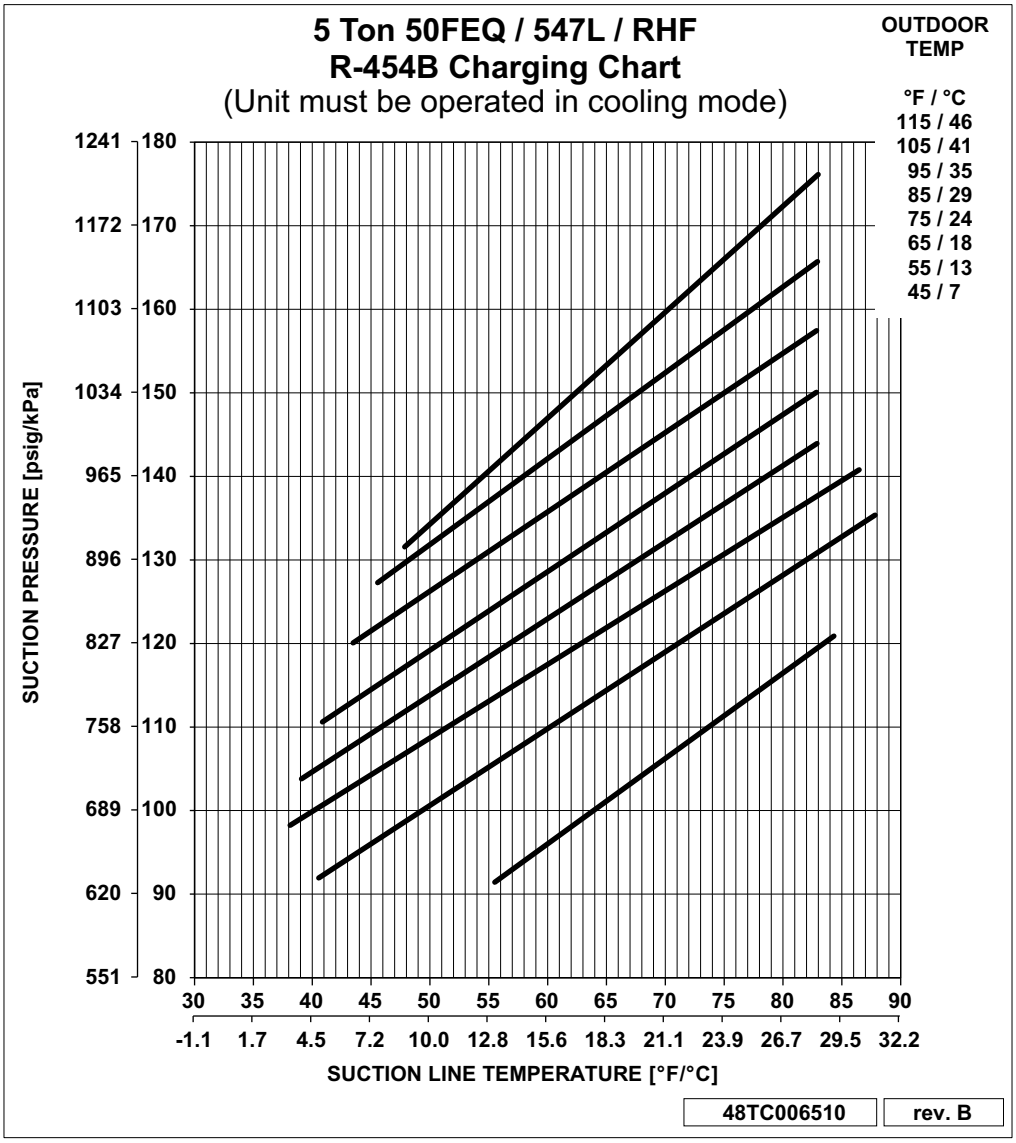

Fig. 25 — Cooling Charging Chart — 5 Ton, 50FEQA06

COOLING CHARGING CHARTS

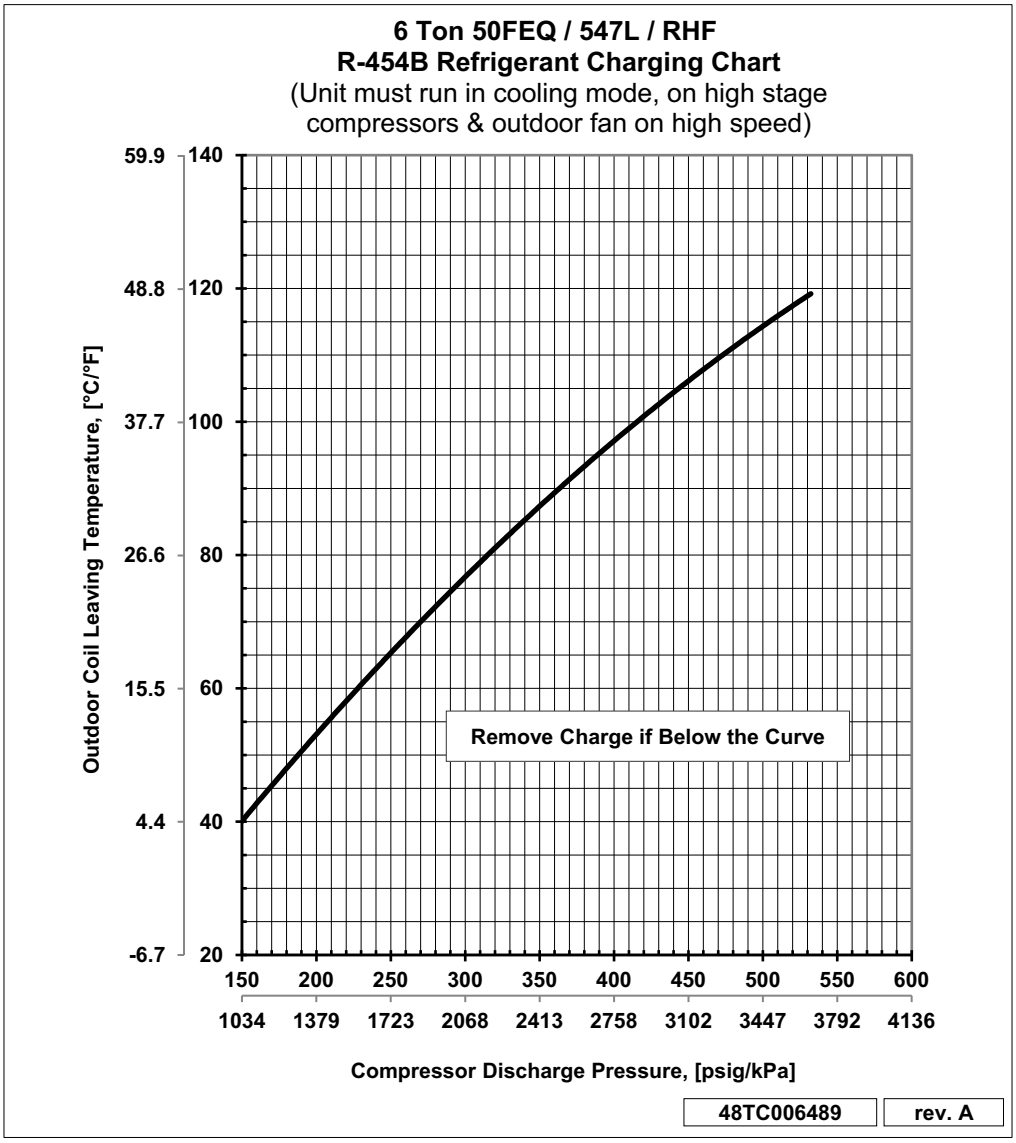

Fig. 26 — Cooling Charging Chart — 6 Ton, 50FEQM07

COMPRESSOR

Lubrication

The compressor is charged with the correct amount of oil at the factory.

⚠ CAUTION

UNIT DAMAGE HAZARD

Failure to follow this caution may result in damage to components.

The compressor is in a R-454B refrigerant system and uses a polyolester (POE) oil. This oil is extremely hygroscopic, meaning it absorbs water readily. POE oils can absorb 15 times as much water as other oils designed for HCFC and CFC refrigerants. Avoid exposure of the oil to the atmosphere.

⚠ WARNING

FIRE, EXPLOSION HAZARD

Failure to follow this warning could result in death, serious personal injury and/or property damage.

Never use air or gases containing oxygen for leak testing or for operating refrigerant compressors. Pressurized mixtures of air or gases containing oxygen can lead to an explosion.

⚠ WARNING

FIRE, EXPLOSION HAZARD

Failure to follow this warning could result in death, serious personal injury and/or property damage.

Never use non-certified refrigerants in this product. Non-certified refrigerants could contain contaminates that could lead to unsafe operating conditions. Use ONLY refrigerants that conform to AHRI Standard 700.

Replacing Compressor

NOTE: Only factory-trained service technicians should remove and replace compressor units.

⚠ CAUTION

INSTALLATION SITE DAMAGE

Failure to follow this caution can result in damage to equipment location site.

R-454B refrigerant contains polyolester (POE) oil that can damage the roof membrane. Caution should be taken to prevent POE oil from spilling onto the roof surface.

The factory also recommends that the suction and discharge lines be cut with a tubing cutter instead of using a torch to remove brazed fittings.

Compressor Rotation

⚠ CAUTION

EQUIPMENT DAMAGE HAZARD

Failure to follow this caution can result in premature wear and damage to equipment.

Scroll compressors can only compress refrigerant if rotating in the right direction. Reverse rotation for extended times can result in internal damage to the compressor. Scroll compressors are sealed units and cannot be repaired on site location.

NOTE: When the compressor is rotating in the wrong direction, the unit makes an elevated level of noise and does not provide cooling.

On 3-phase units with scroll compressors, it is important to be certain compressor is rotating in the proper direction. To determine whether or not compressor is rotating in the proper direction:

1. Connect service gauges to suction and discharge pressure fittings.
2. Energize the compressor.
3. The suction pressure should drop and the discharge pressure should rise, as is normal on any start-up.

   NOTE: If the suction pressure does not drop and the discharge pressure does not rise to normal levels, the evaporator fan is probably also rotating in the wrong direction.
4. Turn off power to the unit.
5. Reverse any 2 of the 3 unit power leads.
6. Reapply electrical power to the compressor. The suction pressure should drop and the discharge pressure should rise which is normal for scroll compressors on start-up.
7. Replace compressor if suction/discharge pressures are not within specifications for the specific compressor.

The suction and discharge pressure levels should now move to their normal start-up levels.

Filter Drier

Replace whenever refrigerant system is exposed to atmosphere. Only use factory specified liquid-line filter driers with working pressures no less than 650 psig (4482 kPa).

Condenser-Fan Adjustment

1. Shut off unit power supply. Install lockout tag.
2. Remove condenser-fan assembly (grille, motor, and fan). See Fig. 27.
3. Loosen fan hub setscrews.
4. Adjust fan height by pushing fan until it stops on the fan shaft.
5. Tighten set screw to 60 in.-lb (6.78 Nm).
6. Replace condenser-fan assembly. When replacing the condenser-fan assembly follow the screw pattern sequence shown in Fig. 28. The screws must be replaced in the sequence shown in the figure.

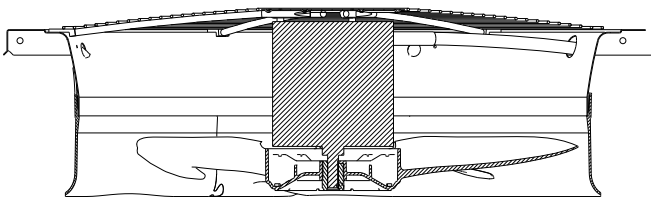

Fig. 27 — Condenser Fan Adjustment

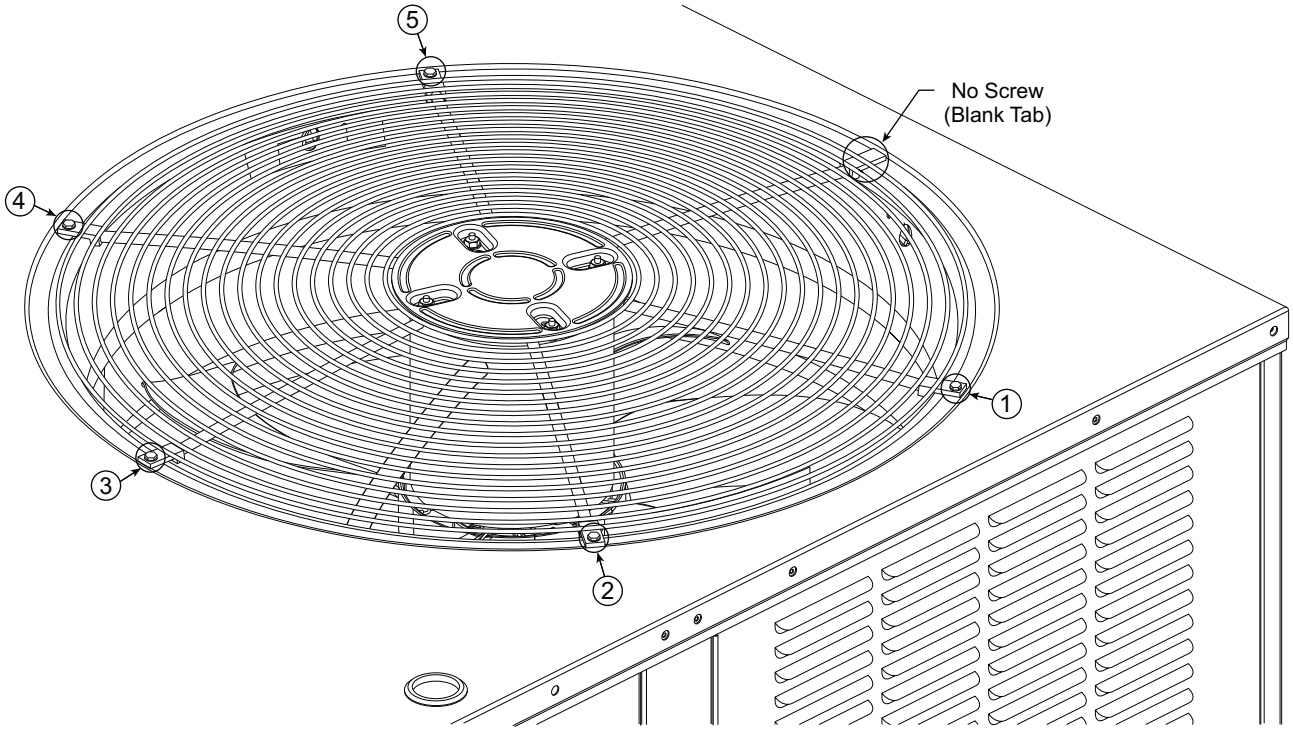

Fig. 28 — Condenser-Fan Assembly — Screw Pattern Sequence

Troubleshooting Cooling System

Refer to Table 6 for additional troubleshooting topics.

Table 6 — Troubleshooting

SYMPTOM	CAUSE	SOLUTION
Compressor and Outdoor Fan Will Not Start	Power failure.	Call power company.
	Fuse blown or circuit breaker tripped.	Replace fuse or reset circuit breaker. Determine root cause.
	Defective thermostat, contactor, transformer, control relay, or capacitor.	Replacement component.
	Insufficient line voltage.	Determine cause and correct.
	Incorrect or faulty wiring.	Check wiring diagram and rewire correctly.
	Thermostat setting too high.	Lower thermostat setting below room temperature.
	High pressure switch tripped.	See problem “Excessive head pressure.”
	Low pressure switch tripped.	Check system for leaks. Repair as necessary.
	Freeze-up protection thermostat tripped.	See problem “Suction pressure too low.”
Compressor Will Not Start but Outdoor Fan Runs	Faulty wiring or loose connections in compressor circuit.	Check wiring and repair or replace.
	Compressor motor burned out, seized, or internal overload open.	Determine cause. Replace compressor or allow enough time for internal overload to cool and reset.
	Defective run/start capacitor, overload, start relay.	Determine cause. Replace compressor or allow enough time for internal overload to cool and reset.
	One leg of 3-phase power dead.	Replace fuse or reset circuit breaker. Determine cause.
Compressor Cycles (Other Than Normally Satisfying Thermostat)	Refrigerant overcharge or undercharge.	Recover refrigerant, evacuate system, and recharge to nameplate.
	Defective compressor.	Replace and determine cause.
	Insufficient line voltage.	Determine cause and correct.
	Blocked outdoor coil or dirty air filter.	Determine cause and correct.
	Defective Run/Start capacitor, overload, or start relay.	Determine cause and correct.
	Defective thermostat.	Replace thermostat.
	Faulty outdoor-fan (cooling) or indoor-fan (heating) motor or capacitor.	Replace faulty part.
	Restriction in refrigerant system.	Locate restriction and remove.
	Defective loader plug.	Determine cause and replace.
Compressor Operates Continuously	Dirty air filter.	Replace filter.
	Unit undersized for load.	Decrease load or increase unit size.
	Thermostat set too low (cooling).	Reset thermostat.
	Low refrigerant charge.	Locate leak; repair and recharge.
	Air in system.	Recover refrigerant, evacuate system, and recharge.
	Outdoor coil dirty or restricted.	Clean coil or remove restriction.
Compressor Makes Excessive Noise	Compressor rotating in the wrong direction.	Reverse the 3-phase power leads as described in Start-Up.
Excessive Head Pressure	Dirty outside.	Replace filter.
	Dirty outdoor coil (cooling).	Clean coil.
	Refrigerant overcharged.	Recover excess refrigerant.
	Air in system.	Recover refrigerant, evacuate system, and recharge.
	Condensing air restricted or air short-cycling.	Determine cause and correct.
Head Pressure Too Low	Low refrigerant charge.	Check for leaks; repair and recharge.
	Compressor scroll plates defective.	Replace compressor.
	Restriction in liquid tube.	Remove restriction.
Excessive Suction Pressure	High heat load.	Check for source and eliminate.
	Compressor scroll plates defective.	Replace compressor.
	Refrigerant overcharge.	Recover excess refrigerant.
Suction Pressure Too Low	Dirty air filter (cooling).	Replace filter.
	Dirt or heavily iced outdoor coil (heating).	Clean outdoor coil. Check defrost cycle operation.
	Low refrigerant charge.	Check for leaks; repair and recharge.
	Metering device or low side restricted.	Remove source of restriction.
	Insufficient indoor airflow (cooling mode).	Increase air quantity. Check filter and replace if necessary.
	Temperature too low in conditioned area.	Reset thermostat.
	Field-installed filter drier restricted.	Replace.
	Outdoor ambient temperature below 40°F (cooling).	Install low-ambient kit.
	Outdoor fan motor(s) not operating (heating).	Check fan motor operation.

CONVENIENCE OUTLETS

⚠ WARNING

ELECTRICAL OPERATION HAZARD

Failure to follow this warning could result in personal injury or death.

Units with convenience outlet circuits may use multiple disconnects. Check convenience outlet for power status before opening unit for service. Locate its disconnect switch, if appropriate, and open it. Lock-out and tag-out this switch, if necessary.

Convenience Outlets

Two types of convenience outlets are offered on 50FEQ models: non-powered and unit-powered. Both types provide a 125 vac ground-fault circuit-interrupt (GFCI) duplex receptacle rated at 15A behind a hinged waterproof access cover, located on the end panel of the unit. See Fig. 29.

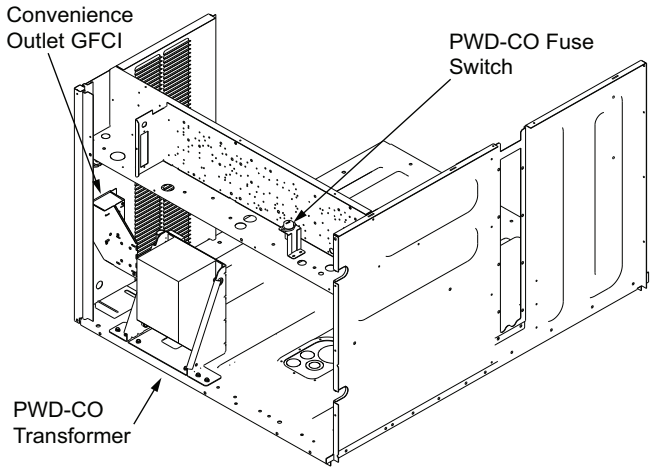

Fig. 29 — Convenience Outlet Location

Installing Weatherproof Cover

A weatherproof while-in-use cover for the factory-installed convenience outlets is now required by UL standards. This cover cannot be factory-mounted due to its depth. The cover must be installed at unit installation. For shipment, the convenience outlet is covered with a blank cover plate.

The weatherproof cover kit is shipped in the unit's control box. The kit includes the hinged cover, a backing plate and gasket.

NOTE: DISCONNECT ALL POWER TO UNIT AND CONVENIENCE OUTLET. Use approved lockout/tag-out procedures.

1. Remove the blank cover plate at the convenience outlet; discard the blank cover.
2. Loosen the 2 screws at the GFCI duplex outlet, until approximately 1/2 in. (13 mm) under screw heads is exposed.
3. Press the gasket over the screw heads. Slip the backing plate over the screw heads at the keyhole slots and align with the gasket; tighten the 2 screws until snug (do not over-tighten).
4. Mount the weatherproof cover to the backing plate as shown in Fig. 30.
5. Remove 2 slot fillers in the bottom of the cover to permit service tool cords to exit the cover.
6. Check cover installation for full closing and latching.

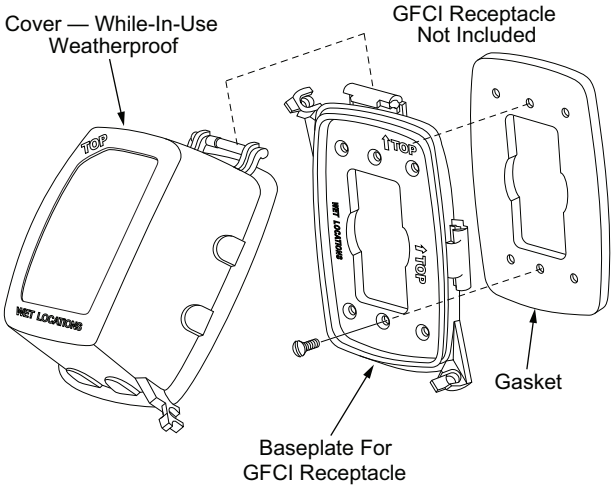

Fig. 30 — Weatherproof Cover Installation

Non-Powered Type

This type requires the field installation of a general-purpose 125-v 15A circuit powered from a source elsewhere in the building. Observe national and local codes when selecting wire size, fuse or breaker requirements and disconnect switch size and location. Route 125-v power supply conductors into the bottom of the utility box containing the duplex receptacle.

Unit-Powered Type

A unit-mounted transformer is factory-installed to step-down the main power supply voltage to the unit to 115-v at the duplex receptacle. This option also includes a manual switch with fuse, located in a utility box and mounted on a bracket behind the convenience outlet; access is through the unit's control box access panel. See Fig. 29.

The primary leads to the convenience outlet transformer are not factory-connected. Selection of primary power source is a customer option. If local codes permit, the transformer primary leads can be connected at the line-side terminals on a unit-mounted non-fused disconnect or Heating, Air Conditioning and Refrigeration (HACR) breaker switch; this will provide service power to the unit when the unit disconnect switch or HACR switch is open. Other connection methods will result in the convenience outlet circuit being de-energized when the unit disconnect or HACR switch is open. See Fig. 31.

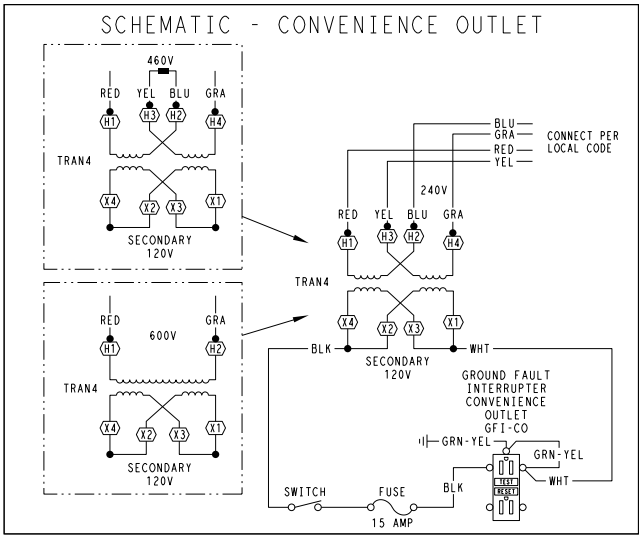

UNIT VOLTAGE	CONNECT AS	PRIMARY CONNECTIONS	TRANSFORMER TERMINALS
208, 230	240	L1: RED +YEL L2: BLU + GRA	H1 + H3 H2 + H4
460	480	L1: RED Splice BLU + YEL L2: GRA	H1 H2 + H3 H4
575	600	L1: RED L2: GRA	H1 H2

Fig. 31 — Powered Convenience Outlet Wiring

Duty Cycle

The unit-powered convenience outlet has a duty cycle limitation. The transformer is intended to provide power on an intermittent basis for service tools, lamps, etc; it is not intended to provide 15A loading for continuous duty loads (such as electric heaters for overnight use). Observe a 50% limit on circuit loading above 8A (i.e., limit loads exceeding 8A to 30 minutes of operation every hour).

Maintenance

Periodically test the GFCI receptacle by pressing the TEST button on the face of the receptacle. This should cause the internal circuit of the receptacle to trip and open the receptacle. Check for proper grounding wires and power line phasing if the GFCI receptacle does not trip as required. Press the RESET button to clear the tripped condition.

Fuse on Powered Type

The factory fuse is a Bussmann™[1] Fusetron™[1] T-15, non-renewable screw-in (Edison base) type plug fuse.

USING UNIT-MOUNTED CONVENIENCE OUTLETS

Units with unit-mounted convenience outlet circuits will often require that 2 disconnects be opened to de-energize all power to the unit. Treat all units as electrically energized until the convenience outlet power is also checked and de-energization is confirmed. Observe National Electrical Code Article 210, Branch Circuits, for use of convenience outlets.

COMMERICAL DEFROST CONTROL

On 50FEQ units equipped with electro-mechanical controls the Defrost Control Board (DFB) coordinates thermostat demands for supply fan control, 1 or 2 stage cooling, 1 stage heating, emergency heating and defrost control with unit operating sequences. The DFB also provides an indoor fan off delay feature (user selectable). See Fig. 32 for board arrangement.

The DFB is located in the main control box of the 50FEQ unit (see Fig. 33). All connections are factory-made through harnesses to the UCB (unit control board) to the ECM (direct-drive motor), reversing valve solenoids, and to defrost thermostats. Refer to Table 7 for details of DFB Inputs and Outputs.

NOTE: The Defrost Control Board is not used on units equipped with the factory-installed SystemVu™ controller option.

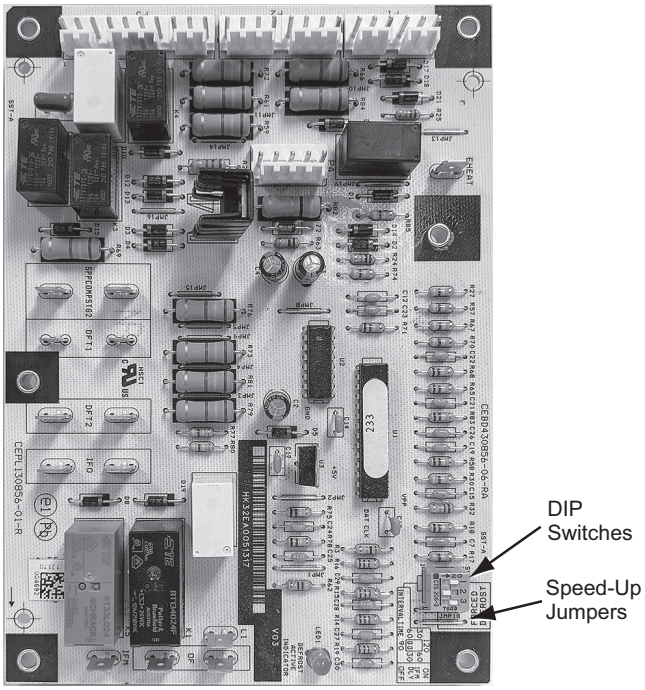

Fig. 32 — Defrost Control Board Arrangement

1. Third-party trademarks and logos are the property of their respective owners.

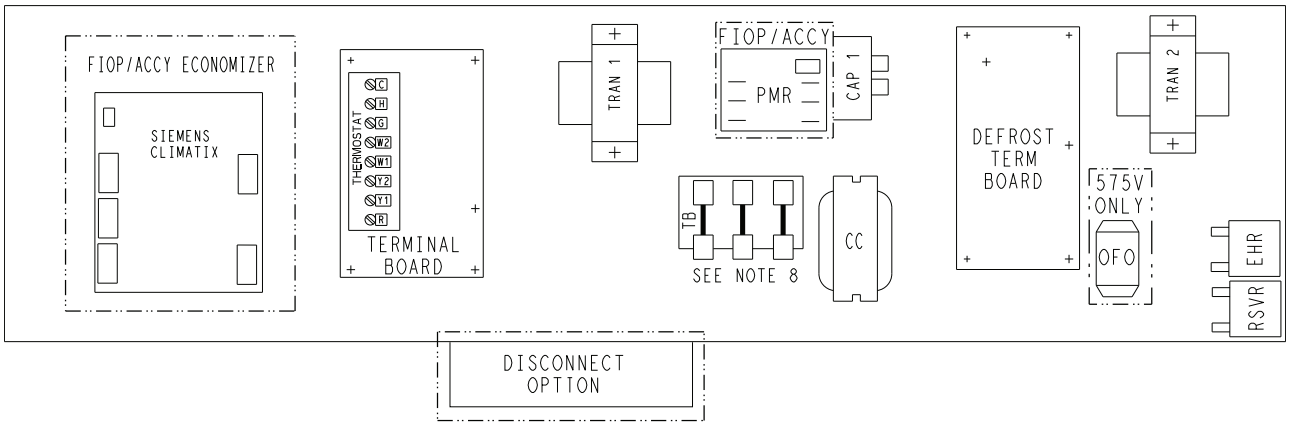

Fig. 33 — Defrost Control Board Location — 50FEQ*04-07 Electro-Mechanical Units

Table 7 — 50FEQ Defrost Board I/O and Jumper Configurations[a,b]

POINT NAME	TYPE OF I/O	CONNECTION PIN NUMBER	UNIT CONNECTION	NOTE
INPUTS				
G Fan	DI, 24 vac	P2-3	CTB-G	
Y1 Cool 1	DI, 24 vac	P2-5	CTB-Y1	
Y2 Cool 2	DI, 24 vac	P2-4	CTB-Y2	
W1 Heat 1	DI, 24 vac	P2-7	CTB-W1	
W2 Heat 2	DI, 24 vac	P2-6	CTB-W2	
R Power	24 vac	P3-1	CONTL BRD-8	
C Common	24 vac	P3-2	CONTL BRD-4	
DFT 1	DI, 24 vac	DFT-1 to DFT-1	—	
DFT 2	DI, 24 vac	DFT-2 to DFT-2	—	
OUTPUTS				
IFO Fan On	DO, 24 vac	P3-9	REHEAT/HP-2	
OF OD Fan On	DO, 24 vac	OF	OFR	
RVS1	DO, 24 vac	P3-7 to P3-5	—	Energize in COOL
RVS2	DO, 24 vac	P3-6 to P3-4	—	Energize in COOL
COMP 1	DO, 24 vac	P3-10	FPT1-REHEAT/HP-6	
COMP 2	DO, 24 vac	P3-8	FPT2-REHEAT/HP-8	
HEAT 2	DO, 24 vac	E-HEAT	TB4-1	
COM	24 vac	P3-3	TB4-3	
CONFIGURATION				
Select Jumper	24 vac	P1-1	—	
SPEED-UP CONFIGURATION				
Speed-Up Jumper	—	JMP17	—	
Speed-Up Jumper	—	JMP18	—	

NOTE(S):

a. Jumper for 1-3 seconds: Factory Test — The defrost interval timing is reduced by a factor of 0.1 seconds/minute based on the positions of DIP switches SW1 and SW2 (i.e., 90 minutes will be reduced to 9 seconds).
b. Jumper for 5-20 seconds: Forced Defrost—Defrost runs for 30 seconds if DFT2 is open.

Reversing Valve Control

The DFB has 2 outputs for unit reversing valve control. Operation of the reversing valves is based on internal logic; this application does not use an "O" or "B" signal to determine reversing valve position. Reversing valves are energized during the cooling stages and the defrost cycle and de-energized during heating cycles. Once energized at the start of a cooling stage, the reversing valve will remain energized until the next heating cycle demand is received. Once de-energized at the start of a Heating cycle, the reversing valves will remain de-energized until the next cooling stage is initiated.

Compressor Control

The DFB receives inputs indicating Stage 1 Cooling, Stage 2 Cooling and Stage 1 Heating from the space thermostat or unit control system (SystemVu™ controller); it generates commands to start the compressor with or without reversing valve operation to produce Stage 1 cooling (compressor on for 3 to 5 ton and compressor on unloaded for 6 ton), Stage 2 cooling (compressor loaded for 6 ton) or Stage 1 heating (compressor loaded).

Auxiliary (Electric) Heat Control

The 50FEQ unit can be equipped with one or 2 auxiliary electric heaters, to provide a second stage of heating. The DFB will energize this Heating System for a Stage 2 Heating Command (heaters operate concurrently with compressor(s) in the Stage 1 Heating cycle), for an Emergency Heating sequence (compressors are off and only the electric heaters are energized) and also during the Defrost cycle (to eliminate a "cold blow" condition in the space).

Defrost

The defrost control mode is a time/temperature sequence. There are 2 time components: The continuous run period and the test/defrost cycle period. The temperature component is provided by Defrost Thermostat (DFT) mounted on the outdoor coil.

The continuous run period is a fixed time period between the end of the last defrost cycle (or start of the current Heating cycle) during which no defrost will be permitted. This period can be set at 30, 60, 90 or 120 minutes by changing the positions of DIP switches SW1 and SW2 (see Fig. 34 and Table 8). The default run period is 30 minutes.

Shorting the jumpers for a period of 5 to 20 seconds bypasses the remaining continuous run period and places the unit in a Forced Defrost mode. If the controlling DFT is closed when this mode is initiated, the unit will complete a normal defrost period that will terminate when the controlling DFT opens or the 10 minute defrost cycle limit is reached. If the controlling DFT is open when this mode is initiated, the Defrost cycle will run for 30 seconds. Both modes end at the end of the Defrost cycle.

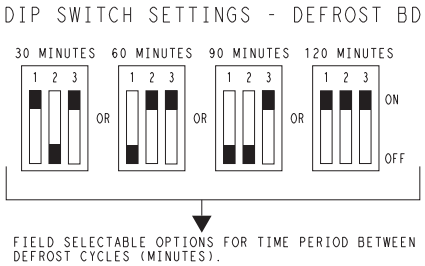

Fig. 34 — DIP Switch Settings — Defrost Board

ELECTRIC HEATERS

The 50FEQ units can be equipped with field-installed accessory electric heaters. The heaters are modular in design, with heater frames holding open coil resistance wires strung through ceramic insulators and control contactor(s), using a combination of 24-v control side break/auto-reset or line-break/auto-reset limit switches and a pilot-circuit/manual reset limit switch to protect the unit against over-temperature situations. All 50FEQ Model electric heaters are one module containing either one or 2 banks of electric heat coils.

Heater modules are installed in the compartment below the indoor (supply) fan outlet. Access is through the indoor access panel. Heater modules slide into the compartment on tracks along the bottom of the heater opening. See Fig. 35-37.

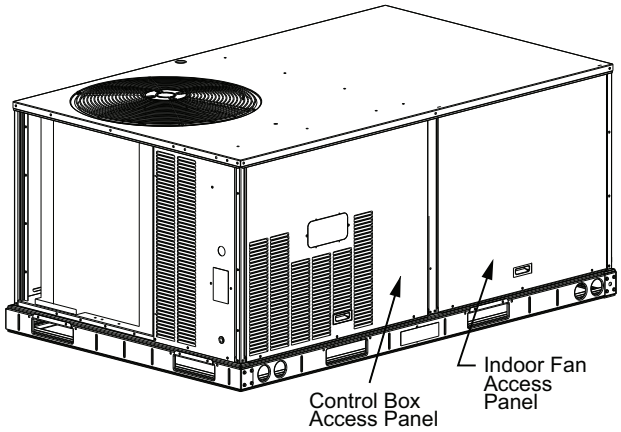

Fig. 35 — Typical Access Panel Location

Not all available heater modules can be used in every unit. Use only those heater modules that are UL listed for use in a specific size unit. Refer to the label on the unit cabinet regarding approved heaters.

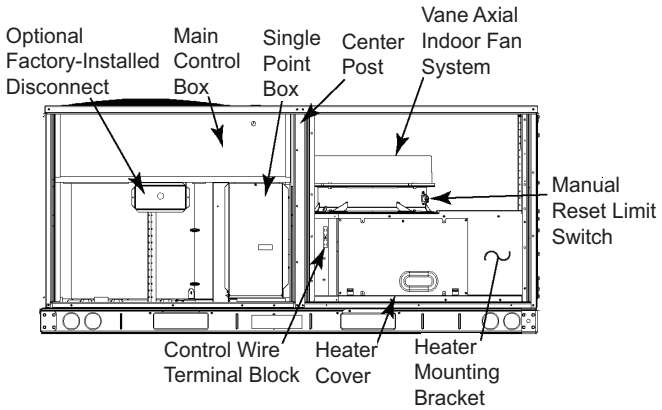

Fig. 36 — Typical Component Location

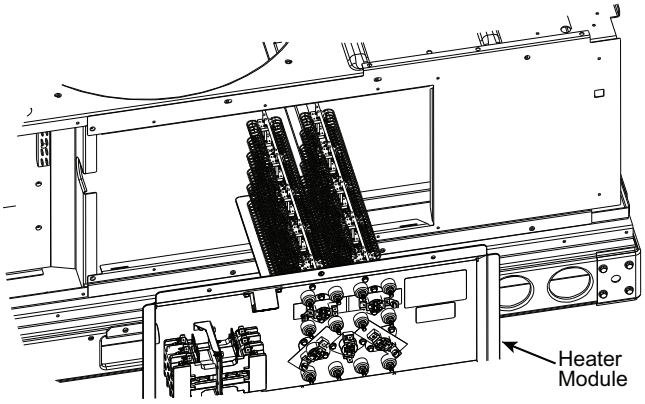

Fig. 37 — Typical Module Installation

Table 8 — DIP Switch Positions

	1	2		1	2		1	2		1	2		3	
1	•		1		•	1			1	•	•	1	•	On
0		•	0	•		0	•	•	0			0		Off
	30 minutes (factory default)			60 minutes			90 minutes			120 minutes			Fan Delay	

Single Point Boxes and Supplementary Fuses

When the unit MOCP device value exceeds 60A, unit-mounted supplementary fuses are required for each heater circuit. These fuses are included in accessory single point boxes, with power distribution and fuse blocks. The single point box will be installed directly under the unit control box, just to the left of the partition separating the indoor section (with electric heaters) from the outdoor section. The single point box has a hinged access cover. See Fig. 38.

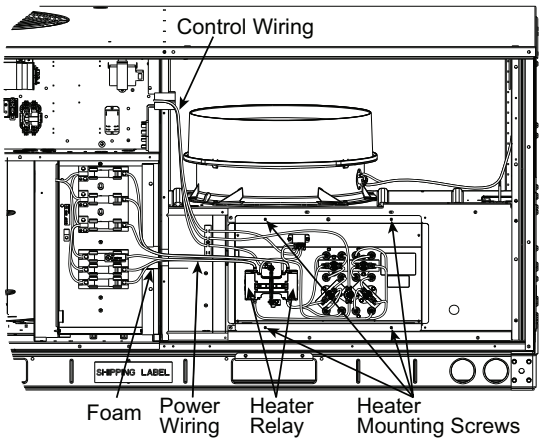

Fig. 38 — Typical Single Point Installation

On 50FEQ units, all fuses are 60A. Single point boxes containing fuses for 208/230-v applications use UL Class RK5 250-v fuses (Bussmann™[1] FRNR 60 or Ferraz Shawmut®[1] TR 60R). Single point boxes for 460-v and 575-v applications use UL Class T 600-v fuses (Bussmann JJS 60 or Ferraz Shawmut A6T 60). (Note that all heaters are qualified for use with a 60A fuse, regardless of actual heater ampacity, so only 60A fuses are necessary.)

Safety Devices

CRHEATERS323A00-341A00 electric heater applications use a combination of 24-v control side break/auto-reset, line-break/non-resettable "one shot" limit switches and a fan stator/manual reset limit switch to protect the unit against over-temperature situations.

Line-break/auto-reset limit switches, 24-v control side break/auto-reset and line-break/non-resettable "one shot" limit switches are mounted on the base plate of each heater module. See Fig. 39. These are accessed through the indoor access panel. Remove the switch by removing 2 screws into the base plate and extracting the existing switch.

Fan stator/manual reset limit switch is located in the side plate of the indoor (supply) fan housing. See Fig. 39.

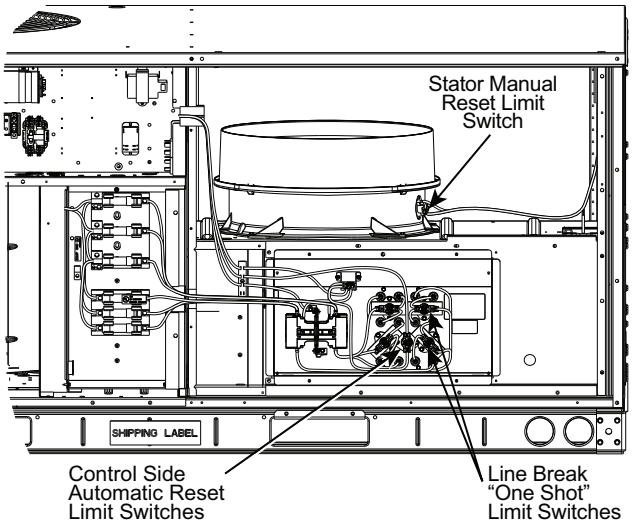

Fig. 39 — Typical Location of Heater Limit Switches (3-phase heater shown)

Completing Heater Installation

FIELD POWER CONNECTIONS

Tap conductors must be installed between the base unit's field power connection lugs and the single point box (with or without fuses). See Fig. 40. Refer to unit wiring schematic. Use copper wire only. For connection using the single point box without fuses, connect the field power supply conductors to the heater power leads and the field-supplied tap conductors inside the single point box. Use UL-approved pressure connectors (field-supplied) for these splice joints.

LOW-VOLTAGE CONTROL CONNECTIONS

Pull the low-voltage control leads from the heater module(s) — ORN, VIO and BRN — to the 4-pole terminal board TB4 located on the heater bulkhead to the left of heater 1. Connect the ORN lead to terminal TB4-1. Connect the VIO lead to terminal TB4-2. Connect the BRN lead to terminal TB4-3. See Fig. 40.

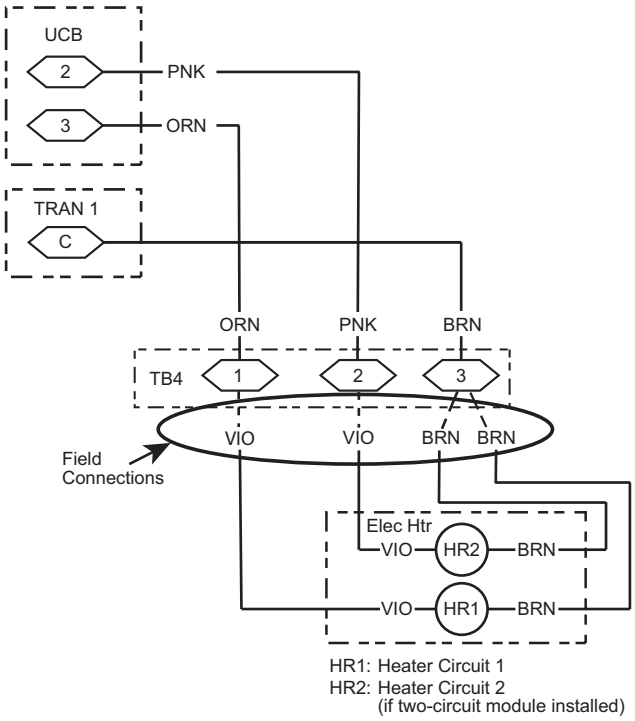

Fig. 40 — Accessory Electric Heater Control Connections

1. Third-party trademarks and logos are the property of their respective owners.

SMOKE DETECTORS

Smoke detectors are available as factory-installed options on 50FEQ models. Smoke detectors may be specified for supply air only, for return air without or with economizer, or in combination of supply air and return air. Return air smoke detectors are arranged for vertical return configurations only. All components necessary for operation are factory-provided and mounted. The unit is factory-configured for immediate smoke detector shutdown operation; additional wiring or modifications to unit terminal board may be necessary to complete the unit and smoke detector configuration to meet project requirements.

System

The smoke detector system consists of a 4-wire controller and one or 2 sensors. Its primary function is to shut down the rooftop unit in order to prevent smoke from circulating throughout the building. It is not to be used as a life saving device.

Controller

The controller (see Fig. 41) includes a controller housing, a printed circuit board, and a clear plastic cover. The controller can be connected to one or 2 compatible duct smoke sensors. The clear plastic cover is secured to the housing with a single captive screw for easy access to the wiring terminals. The controller has 3 LEDs (for Power, Trouble, and Alarm) and a manual test/reset button (on the cover face).

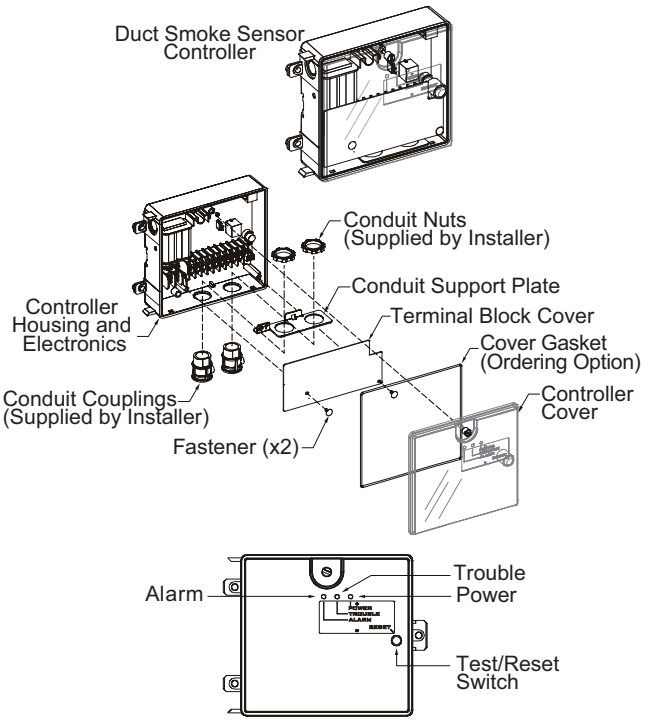

Fig. 41 — Controller Assembly

Smoke Detector Sensor

The smoke detector sensor (see Fig. 42) includes a plastic housing, a printed circuit board, a clear plastic cover, a sampling tube inlet, and an exhaust tube. The sampling tube (when used) and exhaust tube are attached during installation. The sampling tube varies in length depending on the size of the rooftop unit. The clear plastic cover permits visual inspections without having to disassemble the sensor. The cover attaches to the sensor housing using 4 captive screws and forms an airtight chamber around the sensing electronics. Each sensor includes a harness with an RJ45 terminal for connecting to the controller. Each sensor has 4 LEDs (for Power, Trouble, Alarm, and Dirty) and a manual test/reset button (on the left-side of the housing).

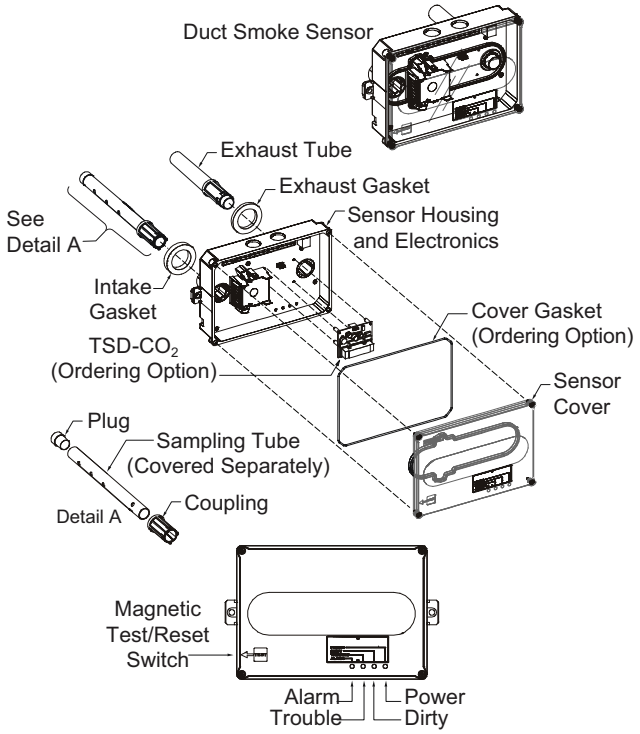

Fig. 42 — Smoke Detector Sensor

Air is introduced to the duct smoke detector sensor's sensing chamber through a sampling tube that extends into the HVAC duct and is directed back into the ventilation system through a (shorter) exhaust tube.

The difference in air pressure between the 2 tubes pulls the sampled air through the sensing chamber. When a sufficient amount of smoke is detected in the sensing chamber, the sensor signals an alarm state and the controller automatically takes the appropriate action to shut down fans and blowers, change over air handling systems, notify the fire alarm control panel, etc.

The sensor uses a process called differential sensing to prevent gradual environmental changes from triggering false alarms. A rapid change in environmental conditions, such as smoke from a fire, causes the sensor to signal an alarm state but dust and debris accumulated over time does not.

The difference in air pressure between the 2 tubes pulls the sampled air through the sensing chamber. When a sufficient amount of smoke is detected in the sensing chamber, the sensor signals an alarm state and the controller automatically takes the appropriate action to shut down fans and blowers, change over air handling systems, notify the fire alarm control panel, etc.

For installations using 2 sensors, the duct smoke detector does not differentiate which sensor signals an alarm or trouble condition.

Smoke Detector Locations

SUPPLY AIR

The supply air smoke detector sensor is located to the right of the unit's indoor (supply) fan. See Fig. 43. Access is through the fan access panel. The sampling tube inlet extends through the fan deck (into a high pressure area). The controller is located on a bracket to the right of the return filter, accessed through the lift-off filter panel.

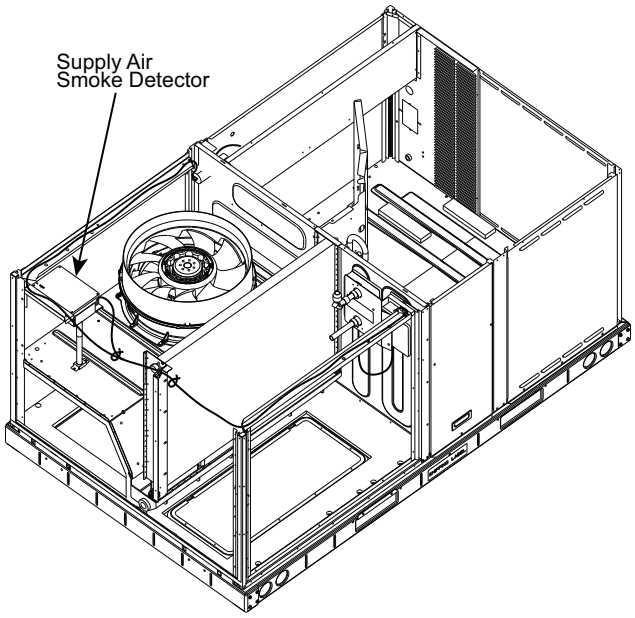

Fig. 43 — Typical Supply Air Smoke Detector Sensor Location

RETURN AIR SMOKE DETECTOR SENSOR WITHOUT ECONOMIZER

The sampling tube is located across the return air opening on the unit basepan. See Fig. 44. The holes in the sampling tube face downward, into the return air stream. The sampling tube is connected through tubing to the return air sensor that is mounted on a bracket high on the partition between return filter and controller location. The sensor is shipped in a flat-mounting location. Installation requires that this sensor be relocated to its operating location and the tubing to the sampling tube be connected. See installation steps.

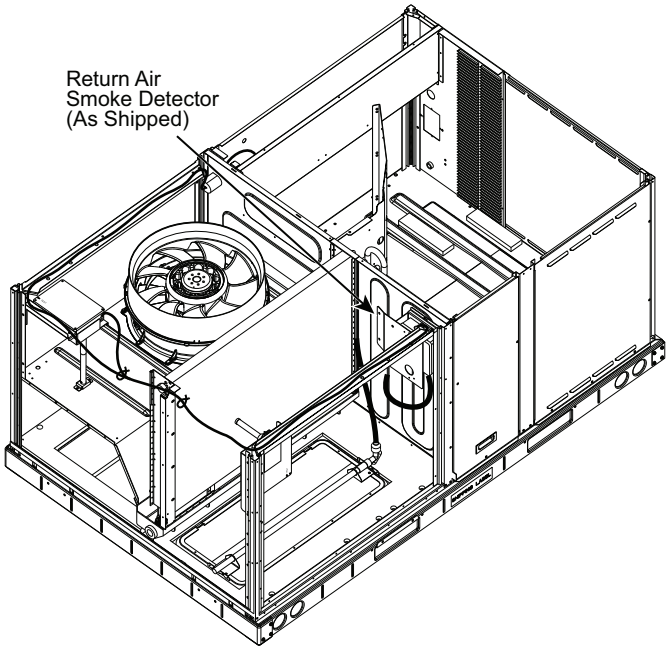

Fig. 44 — Typical Return Air Smoke Detector Location

RETURN AIR SMOKE DETECTOR SENSOR WITH ECONOMIZER

The sampling tube is inserted through the side plates of the economizer housing, placing it across the return air opening on the unit basepan. See Fig. 45. The holes in the sampling tube face downward, into the return air stream. The sampling tube is connected using tubing to the return air sensor mounted on a bracket high on the partition between return filter and controller location. The sensor is shipped in a flat-mounting location. Installation requires the sensor be relocated to its operating location and the tubing to the sampling tube be connected. See installation steps below.

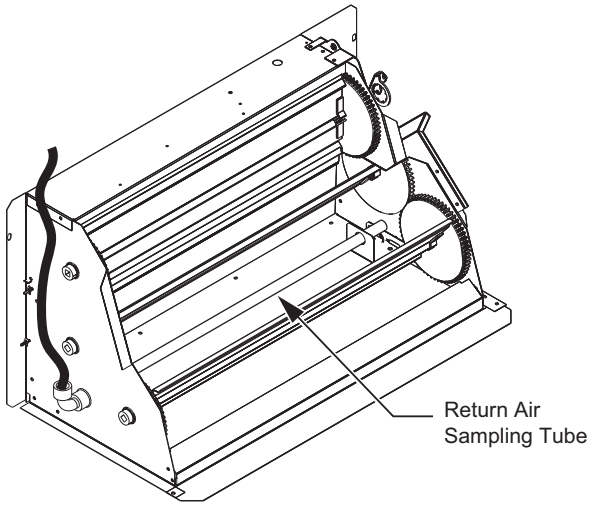

Fig. 45 — Return Air Sampling Tube Location (View reoriented to show opposite side for clarity.)

Completing Installation of Return Air Smoke Detector

Use the following steps to complete the installation of the return air smoke detector.

1. Unscrew the 2 screws holding the return air sensor detector plate. See Fig. 46. Save the screws.

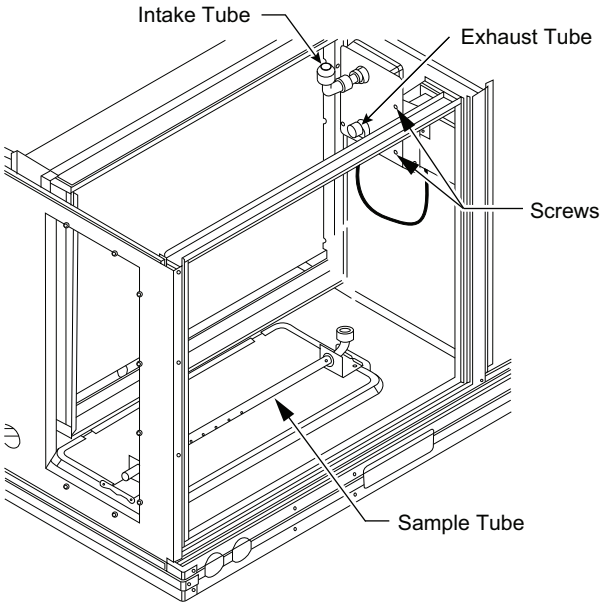

Fig. 46 — Return Air Smoke Detector Shipping Position

2. Remove the return air smoke sensor module and its detector plate.
3. Rotate the detector plate so the sensor is facing outwards and the sampling tube connection is on the bottom. See Fig. 47.

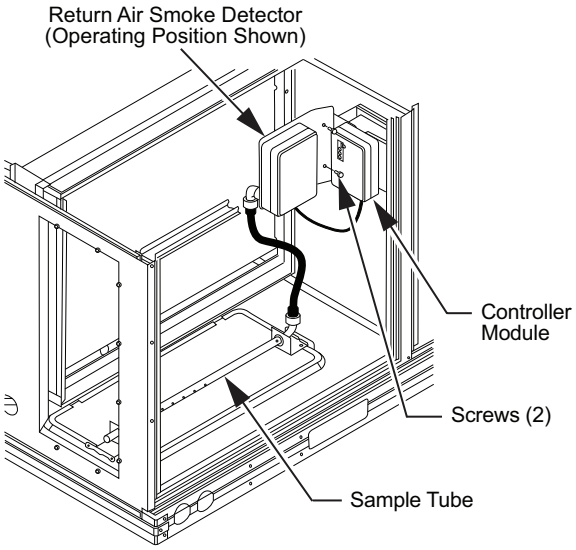

Fig. 47 — Return Air Smoke Detector Operating Position

4. Screw the sensor and detector plate into its operating position using screws from Step 1. Ensure the sampling tube connection is on the bottom and the exhaust tube is on the top.
5. Connect the flexible tube on the sampling inlet to the sampling tube on the basepan.
6. For units with an economizer, the sampling tube is integrated into the economizer housing but connecting the flexible tubing to the sampling tube is the same.

FIOP Smoke Detector Wiring and Response

ALL UNITS

The FIOP smoke detector is configured to automatically shut down all unit operations when a smoke condition is detected. See Fig. 48, Smoke Detector Wiring.

Highlight A

Smoke detector NC contact set will open on smoke alarm condition, de-energizing the ORN conductor.

Highlight B

24-v power signal using the ORN lead is removed at the smoke detector input on UCB; all unit operations cease immediately.

Highlight C

On smoke alarm condition, the smoke detector NO Alarm contact will close, supplying 24-v power to GRA conductor.

Highlight D

WHT lead at Smoke Alarm input on UCB provides 24-v signal to FIOP DDC control.

USING REMOTE LOGIC

Six conductors are provided for field use (see Highlight E) for additional annunciation functions.

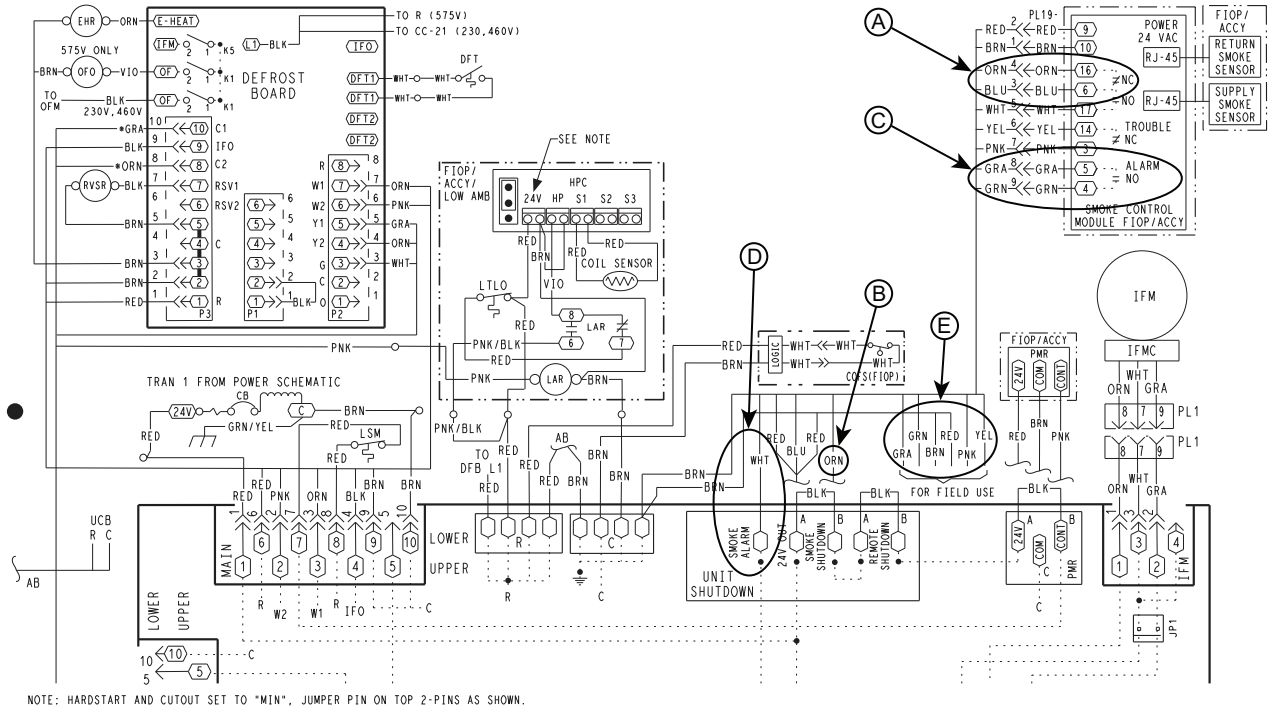

Fig. 48 — Typical Smoke Detector System Wiring

SYSTEMVU™ UNITS

See Fig. 49 for typical SystemVu controller smoke detector wiring

Highlight A

Smoke detector NC contact set will open on smoke alarm condition, de-energizing the ORN conductor.

Highlight B – Using Remote Logic (SystemVu Controller)

Six conductors are provided for field use (see Highlight B) for additional annunciation functions.

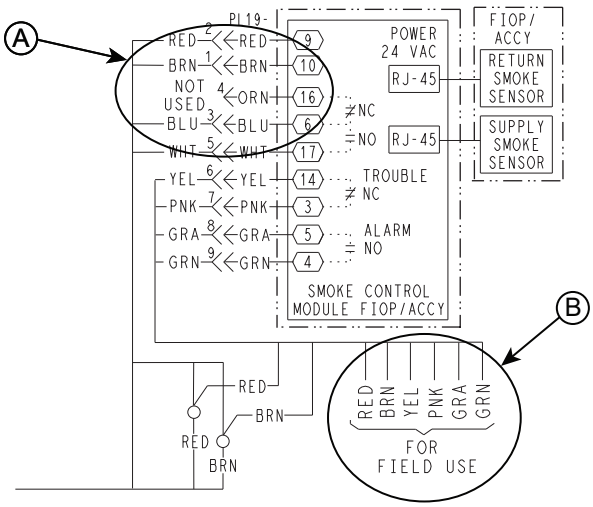

Fig. 49 — Typical Smoke Detector System Wiring, SystemVu Control Units

ADDITIONAL APPLICATION DATA

Refer to the application data document "Factory Installed Smoke Detectors for Small and Medium Rooftop Units 2 to 25 Tons" for discussions on additional control features of these smoke detectors including multiple unit coordination.

SENSOR AND CONTROLLER TESTS

Sensor Alarm Test

The sensor alarm test checks a sensor's ability to signal an alarm state. This test requires use of a field provided SD-MAG test magnet.

> IMPORTANT: Failure to follow this ALERT can result in an unnecessary evacuation of the facility.
> This test places the duct detector into the alarm state. Unless part of the test, disconnect all auxiliary equipment from the controller before performing the test. If the duct detector is connected to a fire alarm system, notify the proper authorities before performing the test.

SENSOR ALARM TEST PROCEDURE

1. Hold the test magnet where indicated on the side of the sensor housing for 7 seconds.
2. Verify that the sensor's Alarm LED turns on.
3. Reset the sensor by holding the test magnet against the sensor housing for 2 seconds.
4. Verify that the sensor's Alarm LED turns off.

Controller Alarm Test

The controller alarm test checks the controller's ability to initiate and indicate an alarm state.

CONTROLLER ALARM TEST PROCEDURE

1. Press the controller's test/reset switch for 7 seconds.
2. Verify that the controller's Alarm LED turns on.
3. Reset the sensor by pressing the test/reset switch for 2 seconds.
4. Verify that the controller's Alarm LED turns off.

> IMPORTANT: Failure to follow this ALERT can result in an unnecessary evacuation of the facility.
> This test places the duct detector into the alarm state. Unless part of the test, disconnect all auxiliary equipment from the controller before performing the test. If the duct detector is connected to a fire alarm system, notify the proper authorities before performing the test.

Dirty Controller Test

The dirty controller test checks the controller's ability to initiate a dirty sensor test and indicate its results.

> IMPORTANT: Failure to follow this ALERT can result in an unnecessary evacuation of the facility.
> Pressing the controller's test/reset switch for longer than 7 seconds will put the duct detector into the alarm state and activate all automatic alarm responses.

DIRTY CONTROLLER TEST PROCEDURE

1. Press the controller's test/reset switch for 2 seconds.
2. Verify that the controller's Trouble LED flashes.

Dirty Sensor Test

The dirty sensor test provides an indication of the sensor's ability to compensate for gradual environmental changes. A sensor that can no longer compensate for environmental changes is considered 100% dirty and requires cleaning or replacing. A field provided SD-MAG test magnet must be used to initiate a sensor dirty test. The sensor's Dirty LED indicates the results of the dirty test as shown in Table 9.

> IMPORTANT: Failure to follow this ALERT can result in an unnecessary evacuation of the facility.
> Holding the test magnet against the sensor housing for more than 7 seconds will put the duct detector into the alarm state and activate all automatic alarm responses.

Table 9 — Dirty LED Test

FLASHES	DESCRIPTION
1	0-25% dirty (Typical of a newly installed detector)
2	25-50% dirty
3	51-75% dirty
4	76-99% dirty

DIRTY SENSOR TEST PROCEDURE

1. Hold the test magnet where indicated on the side of the sensor housing for 2 seconds.
2. Verify that the sensor's Dirty LED flashes.

> IMPORTANT: Failure to follow this ALERT can result in an unnecessary evacuation of the facility.
> Changing the dirty sensor test operation will put the detector into the alarm state and activate all automatic alarm responses. Before changing dirty sensor test operation, disconnect all auxiliary equipment from the controller and notify the proper authorities if connected to a fire alarm system.

Changing the Dirty Sensor Test

By default, sensor dirty test results are indicated by:

- The sensor's Dirty LED flashing.
- The controller's Trouble LED flashing.
- The controller's supervision relay contacts toggle.

The operation of a sensor's dirty test can be changed so that the controller's supervision relay is not used to indicate test results. When 2 detectors are connected to a controller, sensor dirty test operation on both sensors must be configured to operate in the same manner.

TO CONFIGURE THE DIRTY SENSOR TEST OPERATION

1. Hold the test magnet where indicated on the side of the sensor housing until the sensor's Alarm LED turns on and its Dirty LED flashes twice (approximately 60 seconds).
2. Reset the sensor by removing the test magnet then holding it against the sensor housing again until the sensor's Alarm LED turns off (approximately 2 seconds).

Remote Station Test

The remote station alarm test checks a test/reset station's ability to initiate and indicate an alarm state.

> IMPORTANT: Failure to follow this ALERT can result in an unnecessary evacuation of the facility.
> This test places the duct detector into the alarm state. Unless part of the test, disconnect all auxiliary equipment from the controller before performing the test. If the duct detector is connected to a fire alarm system, notify the proper authorities before performing the test.

SD-TRM4 Remote Alarm Test Procedure

1. Hold the test magnet to the target area for 7 seconds.
2. Verify that the test/reset station's Alarm LED turns on.
3. Reset the sensor by holding the test magnet to the target area for 2 seconds.
4. Verify that the test/reset station's Alarm LED turns off.

Remote Test/Reset Station Dirty Sensor Test

The test/reset station dirty sensor test checks the test/reset station's ability to initiate a sensor dirty test and indicate the results. It must be wired to the controller as shown in Fig. 50 and configured to operate the controller's supervision relay. For more information, see "Dirty Sensor Test" on page 32.

> IMPORTANT: Failure to follow this ALERT can result in an unnecessary evacuation of the facility.
> If the test/reset station's key switch is left in the RESET/TEST position for longer than 7 seconds, the detector will automatically go into the alarm state and activate all automatic alarm responses.

> IMPORTANT: Failure to follow this ALERT can result in an unnecessary evacuation of the facility.
> Holding the test magnet to the target area for longer than 7 seconds will put the detector into the alarm state and activate all automatic alarm responses.

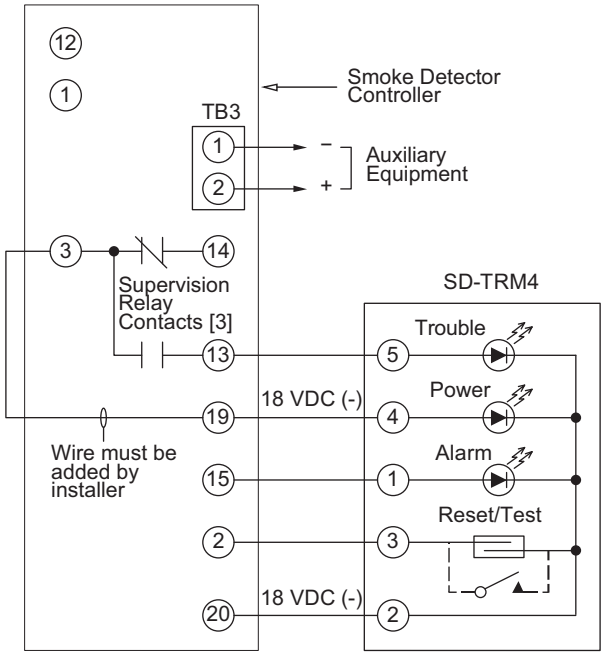

Fig. 50 — Remote Test/Reset Station Connections

Dirty Sensor Test Using an SD-TRM4

1. Hold the test magnet where indicated on the side of the sensor housing for 2 seconds.
2. Verify that the test/reset station's Trouble LED flashes.

Detector Cleaning

CLEANING THE SMOKE DETECTOR

Clean the duct smoke sensor when the Dirty LED is flashing continuously or sooner, if conditions warrant.

> IMPORTANT: OPERATIONAL TEST ALERT
> Failure to follow this ALERT can result in an unnecessary evacuation of the facility.
> If the smoke detector is connected to a fire alarm system, first notify the proper authorities that the detector is undergoing maintenance then disable the relevant circuit to avoid generating a false alarm.

1. Disconnect power from the duct detector then remove the sensor's cover. See Fig. 51.

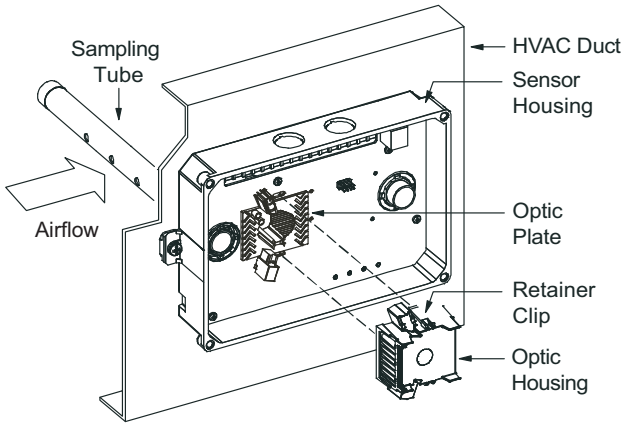

Fig. 51 — Sensor Cleaning Diagram

2. Using a vacuum cleaner, clean compressed air, or a soft bristle brush, remove loose dirt and debris from inside the sensor housing and cover. Use isopropyl alcohol and a lint-free cloth

to remove dirt and other contaminants from the gasket on the sensor's cover.
3. Squeeze the retainer clips on both sides of the optic housing.
4. Lift the housing away from the printed circuit board.
5. Gently remove dirt and debris from around the optic plate and inside the optic housing.
6. Replace the optic housing and sensor cover.
7. Connect power to the duct detector then perform a sensor alarm test.

Indicators

NORMAL STATE

The smoke detector operates in the normal state in the absence of any trouble conditions and when its sensing chamber is free of smoke. In the normal state, the Power LED on both the sensor and the controller are on and all other LEDs are off.

ALARM STATE

The smoke detector enters the alarm state when the amount of smoke particulate in the sensor's sensing chamber exceeds the alarm threshold value. (See Table 10.) Upon entering the alarm state:

- The sensor's Alarm LED and the controller's Alarm LED turn on.
- The contacts on the controller's 2 auxiliary relays switch positions.
- The contacts on the controller's alarm initiation relay close.
- The controller's remote Alarm LED output is activated (turned on).
- The controller's high impedance multiple fan shutdown control line is pulled to ground.

Table 10 — Detector Indicators

CONTROL OR INDICATOR	DESCRIPTION
Magnetic test/ reset switch	Resets the sensor when it is in the alarm or trouble state. Activates or tests the sensor when it is in the normal state.
Alarm LED	Indicates the sensor is in the alarm state.
Trouble LED	Indicates the sensor is in the trouble state.
Dirty LED	Indicates the amount of environmental compensation used by the sensor (flashing continuously = 100%).
Power LED	Indicates the sensor is energized.

TROUBLE STATE

The SuperDuct™[1] duct smoke detector enters the trouble state under the following conditions:

- A sensor's cover is removed and 20 minutes pass before it is properly secured.
- A sensor's environmental compensation limit is reached (100% dirty).
- A wiring fault between a sensor and the controller is detected.
- An internal sensor fault is detected.

Upon entering the trouble state:

- The contacts on the controller's supervisory relay switch positions. (See Fig. 52.)
- If a sensor trouble, the sensor's Trouble LED and the controller's Trouble LED turn on.
- If 100% dirty, the sensor's Dirty LED turns on and the controller's Trouble LED flashes continuously.
- If a wiring fault between a sensor and the controller, the controller's Trouble LED turns on but not the sensor's.

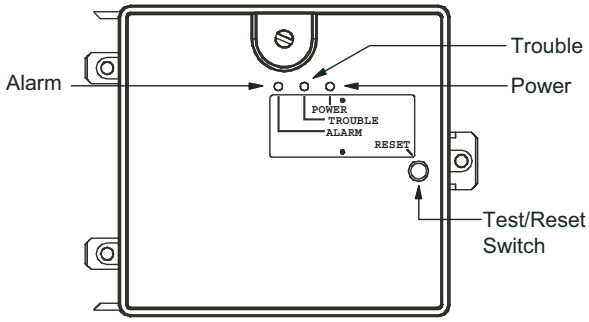

Fig. 52 — Controller Assembly

NOTE: All troubles are latched by the duct smoke detector. The trouble condition must be cleared and then the duct smoke detector must be reset in order to restore it to the normal state.

RESETTING ALARM AND TROUBLE CONDITION TRIPS

Manual reset is required to restore smoke detector systems to Normal operation. For installations using 2 sensors, the duct smoke detector does not differentiate which sensor signals an alarm or trouble condition. Check each sensor for Alarm or Trouble status (indicated by LED). Clear the condition that has generated the trip at this sensor. Then reset the sensor by pressing and holding the reset button (on the side) for 2 seconds. Verify that the sensor's Alarm and Trouble LEDs are now off. At the controller, clear its Alarm or Trouble state by pressing and holding the manual reset button (on the front cover) for 2 seconds. Verify that the controller's Alarm and Trouble LEDs are now off. Replace all panels.

Troubleshooting

CONTROLLER'S TROUBLE LED IS ON

1. Check the Trouble LED on each sensor connected to the controller. If a sensor's Trouble LED is on, determine the cause and make the necessary repairs.
2. Check the wiring between the sensor and the controller. If wiring is loose or missing, repair or replace as required.

CONTROLLER'S TROUBLE LED IS FLASHING

1. One or both of the sensors is 100% dirty.
2. Determine which Dirty LED is flashing then clean that sensor assembly as described in the detector cleaning section.

SENSOR'S TROUBLE LED IS ON

1. Check the sensor's Dirty LED. If it is flashing, the sensor is dirty and must be cleaned.
2. Check the sensor's cover. If it is loose or missing, secure the cover to the sensor housing.
3. Replace sensor assembly.

SENSOR'S POWER LED IS OFF

1. Check the controller's Power LED. If it is off, determine why the controller does not have power and make the necessary repairs.
2. Check the wiring between the sensor and the controller. If wiring is loose or missing, repair or replace as required.

CONTROLLER'S POWER LED IS OFF

1. Make sure the circuit supplying power to the controller is operational. If not, make sure JP2 and JP3 are set correctly on the controller before applying power.
2. Verify that power is applied to the controller's supply input terminals. If power is not present, replace or repair wiring as required.

1. Third-party trademarks and logos are the property of their respective owners.

REMOTE TEST/RESET STATION'S TROUBLE LED DOES NOT FLASH WHEN PERFORMING A DIRTY TEST, BUT THE CONTROLLER'S TROUBLE LED DOES

1. Verify that the remote test/station is wired as shown in Fig. 50. Repair or replace loose or missing wiring.
2. Configure the sensor dirty test to activate the controller's supervision relay. See "Dirty Sensor Test" on page 32.

SENSOR'S TROUBLE LED IS ON, BUT THE CONTROLLER'S TROUBLE LED IS OFF

Remove JP1 on the controller.

PROTECTIVE DEVICES

Compressor Protection

OVERCURRENT

The compressor has internal line-break motor protection.

OVERTEMPERATURE

The compressor has an internal protector to protect it against excessively high discharge gas temperatures.

HIGH PRESSURE SWITCH

The system is provided with a high pressure switch mounted on the discharge line. The switch is stem-mounted and brazed into the discharge tube. Trip setting is 630 psig ±10 psig (4344 ±69 kPa) when hot. Reset is automatic at 505 psig (3482 kPa).

LOW PRESSURE SWITCH

The system is protected against a loss of charge and low evaporator coil loading condition by a low pressure switch located on the suction line near the compressor. The switch is stem-mounted. Trip setting is 54 psig ±5 psig (372 ±34 kPa). Reset is automatic at 117 ±5 psig (807 ±34 kPa).

EVAPORATOR FREEZE PROTECTION

The system is protected against evaporator coil frosting and low temperature conditions by a temperature switch mounted on the evaporator coil hairpin. Trip setting is 30°F ±5°F (–1°C ±3°C). Reset is automatic at 45°F (7°C).

SUPPLY (INDOOR) FAN MOTOR PROTECTION

Disconnect and lockout power when servicing fan motor.

The standard supply fan motor is equipped with internal overcurrent and over-temperature protection. Protection devices reset automatically.

The high static option supply fan motor is equipped with a pilot-circuit Thermix combination over-temperature/over-current protection device. This device resets automatically. Do not bypass this switch to correct trouble. Determine the cause and correct it.

CONDENSER FAN MOTOR PROTECTION

The condenser fan motor is internally protected against over-temperature.

Refrigerant Leak Protection

These units are equipped with a factory installed R-454B leak dissipation system to ensure safe operation in the event of a refrigerant leak. See Leak Dissipation System on starting on page 39 for details.

Relief Device

A soft solder joint at the suction service access port provides pressure relief under abnormal temperature and pressure conditions (i.e., fire in building). Protect this joint during brazing operations near this joint.

Control Circuit, 24-V

The control circuit is protected against overcurrent conditions by a circuit breaker mounted on control transformer TRAN. Reset is manual.

SYSTEMVU™ CONTROL SYSTEM

The SystemVu control is a comprehensive unit-management system. The control system is easy to access, configure, diagnose and troubleshoot.

The SystemVu control system is fully communicating and cable-ready for connection to the Carrier Comfort Network® (CCN), Carrier i-Vu®, and Third Party BACnet®[1] building management systems. The control provides high-speed communications for remote monitoring via the Internet. Multiple units can be linked together (and to other Direct Digital Control (DDC) equipped units) using a 3-wire communication bus.

The SystemVu control system is easy to access through the use of a integrated display module. A computer is not required for start-up. Access to control menus is simplified by the ability to quickly select from 7 main menu items. An expanded readout provides detailed explanations of control information. Only 6 buttons are required to maneuver through the entire controls menu. The display readout is designed to be visible even in bright sunlight. See Fig. 53.

1. Third-party trademarks and logos are the property of their respective owners.

SystemVu Interface

This integrated device is the keypad interface used to access the control information, read sensor values, and test the unit. The interface is located in the main control box.

Through the SystemVu interface, the user can access all of the inputs and outputs to check on their values and status, configure operating parameters, and evaluate the current decision status for operating modes. The control also includes an alarm history which can be accessed from the display. The user can access a built-in test routine that can be used at start-up commissioning and troubleshooting.

Additional SystemVu Installation and Troubleshooting

Additional installation, wiring and troubleshooting information for the SystemVu Controller can be found in the following manual: *50FEQ 04-30, 50GEQ 04-28, 48QE 04-28 Single Package Rooftop Units with SystemVu™ Controls Version X.X and Puron Advance™ (R-454B) Refrigerant, Controls, Start-Up, Operation and Troubleshooting.*

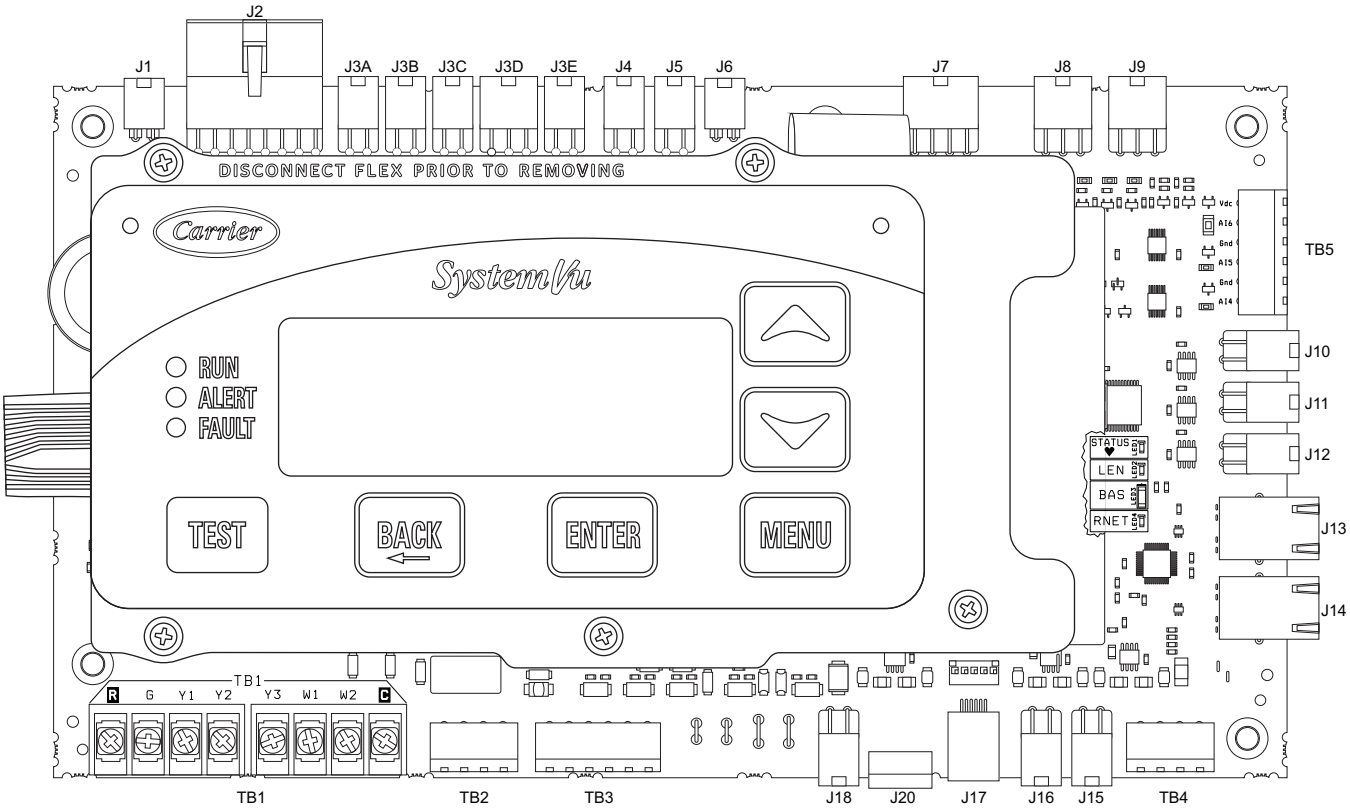

Fig. 53 — SystemVu Control

A2L REFRIGERATION INFORMATION

This equipment contains R-454B, a mildly flammable refrigerant classified as A2L (see Fig. 54). Read all instructions prior to transporting, storing, installing, or servicing this equipment.

Fig. 54 — A2L Refrigerant Safety Group Warning Label

⚠ WARNING

Only use equipment and components that are designed for use with R-454B refrigerant.

⚠ ADVERTISSEMENT

Utilisez uniquement les équipements et les composants conçus pour être utilisés avec le réfrigérant R-454B.

Servicing

Prior to, and during the work being performed on a unit containing A2L refrigerant, the area must be checked with an appropriate refrigerant detector to ensure that the person or persons performing work are aware of a potentially toxic or flammable atmosphere. The area must also be surveyed to ensure there are no flammable hazards or ignition risks. “No Smoking” signs shall be displayed.

Should any hot work need to be performed on the refrigerant system, or associated parts, appropriate fire extinguishing equipment shall be available nearby. Have a dry powder or CO_2 fire extinguisher adjacent to the charging area.

All maintenance staff and others working in the local area shall also be instructed on the nature of work being carried out. Work in confined spaces shall be avoided wherever possible.

Minimum Conditioned Space Area

The space area served by ducted equipment with A2L refrigerant is restricted by building code based on refrigerant volume that the releasable to the conditioned space served by the duct system.

Determine the conditioned space area by calculating the floor area (room length x room width) of all spaces served by a common duct system and adding them all together to get the total conditioned space area.

Compare the calculated total conditioned space area to the minimum conditioned space area (TA_{min}) listed in Table 11, based on the unit size and configuration (with or without Humidi-MiZer).

Table 11 — Minimum Conditioned Space Area (MCSA or TA_{min})

UNIT	(TA_{MIN})[a]	
	Sq Ft	Sq Meter
50FEQA04	241	23
50FEQA05	300	28
50FEQA06	329	31
50FEQM07	376	35

NOTE(S):

a. TA_{min} is based on a minimum ceiling height of 7.2 ft (2.2 m) and the worst-case unit refrigerant charge.

If the space area is above the minimum conditioned space area listed in Table 11 based on unit size and configuration, no action is needed.

If the conditioned space area is below the minimum conditioned space area listed in Table 11 based on unit size and configuration, then additional ventilation may be required. Refer to local code, UL-60335-2-40, or ASHRAE standard 15.

⚠ CAUTION

Do not install an ignition source or potential ignition source in a space where the total conditioned area is below the minimum total conditioned area (TA_{min}), unless a flame arresting device has been installed.

⚠ ADVERTISSEMENT

N'installez pas de source d'inflammation ou de source d'inflammation potentielle dans un espace où la surface totale conditionnée est inférieure à la surface totale conditionnée minimale (TA_{min}), à moins qu'un dispositif pare-flamme n'ait été installé.

Detection of Flammable Refrigerants

Under no circumstances shall potential sources of ignition be used in the searching for or detection of refrigerant leaks. A halide torch (or any other detector utilizing a naked flame) shall not be used.

The following leak detection methods are deemed acceptable for all refrigerant systems.

- Electronic leak detectors may be used to detect refrigerant leaks, but in the case of flammable refrigerants the sensitivity may not be adequate, or may need recalibration. (Detection equipment shall be calibrated in a refrigerant-free area.) Ensure that the detector is not a potential source of ignition and is suitable for the refrigerant used. Leak detection equipment shall be set at a percentage of the LFL of the refrigerant and shall be calibrated to the refrigerant employed, and the appropriate percentage of gas (25% max.) is confirmed.
- Leak detection fluids are also suitable for use with most refrigerants but the use of detergents containing chlorine shall be avoided as the chlorine may react with the refrigerant and corrode the copper pipe-work.
  Examples of leak detection fluids:
  - Bubble method.
  - Fluorescent method agents.

If a leak is suspected, all naked flames shall be removed/extinguished.

If a leakage of refrigerant is found which requires brazing, all of the refrigerant shall be recovered from the system, or isolated (by means of shut off valves) in a part of the system remote from the leak. Removal of refrigerant shall be according to the following section.

Evacuation, Removal, and Recovery

When breaking into the refrigerant circuit to make repairs, or for any other purpose, conventional procedures shall be used. However, for flammable refrigerants it is important that best practice be followed, since flammability is a consideration.

The following procedure shall be adhered to:

- Safely remove refrigerant following local and national regulations
  - Evacuate refrigerant.
  - Purge the circuit with inert gas (optional for A2L refrigerants).
  - Continuously flush or purge with inert gas when using flame to open circuit.
  - Open the circuit.

For appliances containing flammable refrigerants, purging shall be achieved by breaking the vacuum in the system with oxygen-free nitrogen and continuing to fill until the working pressure is achieved, then venting to atmosphere, and finally pulling down to a vacuum. This process may need to be repeated several times until the system is free from refrigerant. When the final oxygen-free nitrogen charge is used, the system shall be vented down to atmospheric pressure to enable work to take place.

The refrigerant charge shall be recovered into the correct recovery cylinders if venting is not allowed by local and national codes. Ensure that the correct number of cylinders for holding the total system charge is available. All cylinders to be used are designated for the recovered refrigerant and labeled for that refrigerant. Cylinders shall be complete with pressure-relief valve and associated shut-off valves in good working order. Empty recovery cylinders are evacuated and, if possible cooled before recovery occurs.

The recovery equipment shall be in good working order with a set of instructions concerning the equipment that is at hand and shall be suitable for the recovery of the flammable refrigerant. If in doubt, the manufacturer should be consulted. In addition, a set of calibrated weighing scales shall be available and in good working order. Hoses shall be complete with leak-free disconnect coupling and in good condition.

The recovered refrigerant shall be processed according to local legislation in the correct recovery cylinder, and the relevant waste transfer not arranged.

IMPORTANT: Do not mix refrigerants in recovery units, and especially not in cylinders.

If compressors or compressor oils are to be removed, ensure that they have been evacuated to an acceptable level to make certain that flammable refrigerant does not remain within the lubricant. The compressor body shall not be heated by an open flame or other ignition sources to accelerate this process. When oil is drained from a system, it shall be carried out safely

IMPORTANT: At no point during this process should the outlet for the vacuum pump be close to any potential ignition sources, and ventilation shall be available.

DECOMMISSIONING

Before carrying out this procedure, it is essential that the technician is completely familiar with the equipment and all its detail. It is recommended good practice that all refrigerants are recovered safely. Prior to the task being carried out, an oil and refrigerant sample shall be taken in case analysis is required prior to re-use of recovered refrigerant. It is essential that electrical power is available before the task is commenced.

1. Become familiar with the equipment and its operation.
2. Isolate the system electrically.
3. Before attempting the procedure, ensure that:
   a. Mechanical handling equipment is available, if required for handling refrigerant cylinders
   b. All personal protective equipment is available and being used correctly
   c. The recovery process is supervised at all times by a competent person
   d. Recovery equipment and cylinders conform to the appropriate standards
4. Pump down refrigerant system, if possible.
5. If a vacuum is not possible, make a manifold so that refrigerant can be removed from various parts of the system.
6. Make sure that the cylinder is situated on the scales before recovery takes place.
7. Start the recovery machine and operate in accordance with instructions.
8. Do not overfill cylinders (no more than 80% of volume liquid charge).
9. Do not exceed the maximum working pressure of the cylinder, even temporarily.
10. When the cylinders have been filled correctly and the process completed, make sure that the cylinders and the equipment are removed from the site promptly and all isolation valves on the equipment are closed off.
11. Recovered refrigerant shall not be charged into another refrigerating system unless it has been cleaned and checked.

Equipment shall be labeled that it has been de-commissioned and emptied of refrigerant. The label shall be dated and signed. For units containing flammable refrigerants, affix labels on the equipment stating the equipment contains flammable refrigerant.

Leak Dissipation System

50FEQ units use Puron Advance™ R-454B refrigerant. These units are equipped with a factory installed R-454B leak dissipation system to ensure safe operation in the event of a refrigerant leak. This system consists of an A2L sensor (Fig. 55) and the dissipation control board (see Fig. 56) which are located in the Indoor Coil section of the unit (see the view labeled "BACK" in Fig. 1 on page 4). The A2L sensor is located between the indoor coil and the air filters.

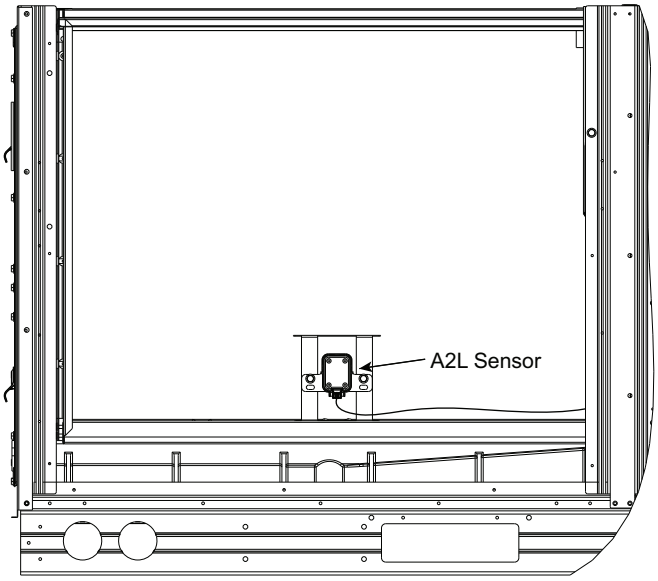

Fig. 55 — Location of A2L Sensor

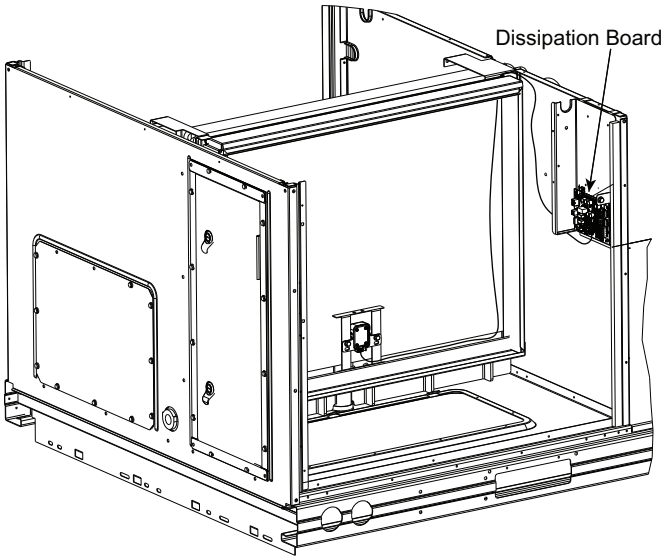

Fig. 56 — Location of Dissipation Control Board (Shown with Dust Cover Removed)

The A2L detection sensor communicates via a wiring harness to the dissipation board The sensor harness is routed on the bottom of the filter rack towards the unit bulkhead and secured with wire ties. The sensor harness then runs up the side of the filter rack and exits over the top of the rack towards the dissipation board.

NOTE: The drain wire must be properly connected to the ground lug on the dissipation board via the quick connect and ground harness. Failure of proper sensor harness grounding can lead to false dissipation events.

Sequence of Operation

The control functions as an R-454B refrigerant dissipation system. If the refrigerant detection sensor sends a signal indicating a refrigerant leak, the control board will prevent heating and cooling operation and begin dissipating the sensed refrigerant with a blower request. The refrigerant dissipation board will display a flash code from the yellow status LED (see Fig. 57) indicating the sensor that detected the refrigerant. See Fig. 59 on page 41 for the full text on the Dissipation Control dust cover label.

When the sensor signal indicates the refrigerant has dissipated, the dissipation board yellow status LED will display a flash code 3 and return to its normal state and allow unit operations after a 5 minute delay.

Leak Dissipation System Self-Test

Power on the unit and verify proper functioning of equipment. The yellow Status LED on the dissipation board should be steady (see Fig. 57). If flash codes are present, see Troubleshooting on page 41.

NOTE: Operation of the Test Mode is only possible if no faults exist on the dissipation board.

Remove the dust cover from the Dissipation control board to access the Test button (see Fig. 58). The Test button is located above the COMM LED.

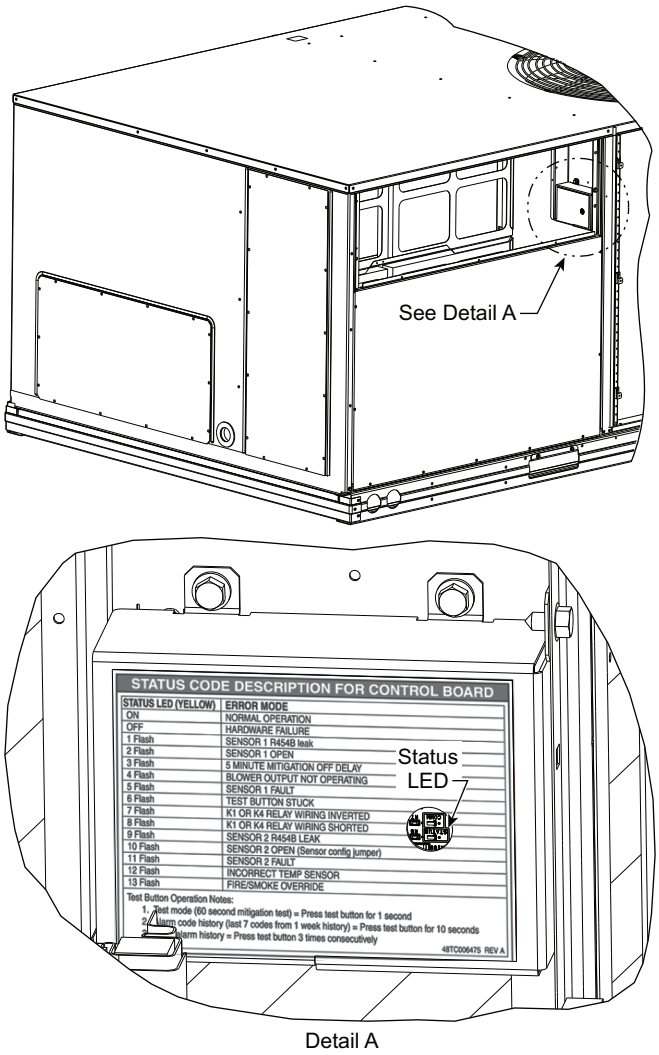

Fig. 57 — Yellow STATUS LED

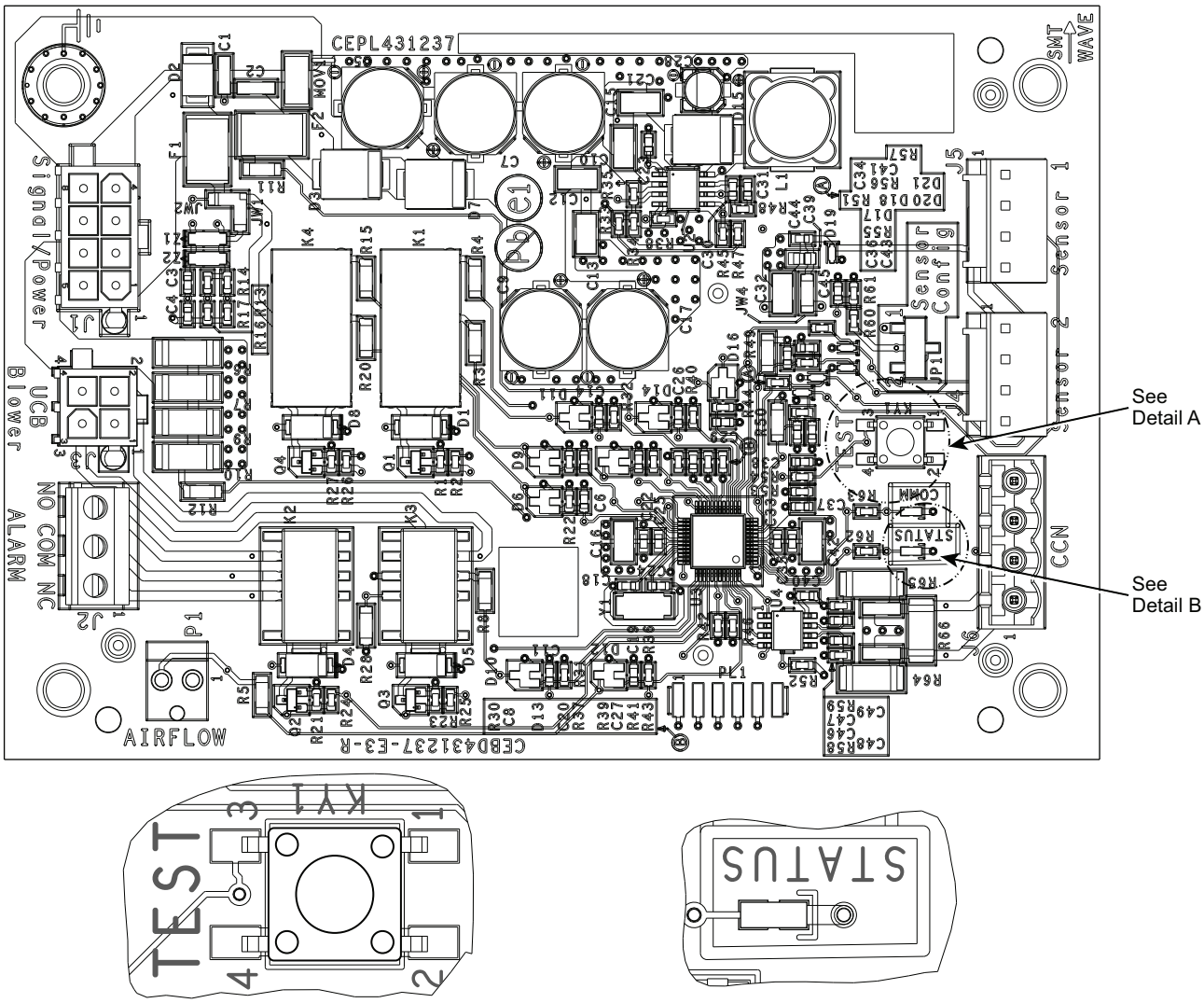

Detail A — Test Button

Detail B — Status LED

Fig. 58 — Dissipation Control Board — Shown without Dust Cover

Press the Test button on the dissipation system control board to ensure proper dissipation system operation under each test condition listed below. After pressing the Test button, system will enter Dissipation Mode for 60 seconds to help verify correct operation.

IMPORTANT: Press the Test button for roughly ONE SECOND to enter Test Mode. Pressing the Test button for a longer periods enables different functions (see Table 12).

Table 12 — Dissipation Board Test Button Functions

HOLD BUTTON TIME (SEC)	FUNCTION
1-4	Dissipation Mode for 60 seconds
5-29	Display flash code history
30+	Flash code 6
3 Rapid Presses	Clear flash code history

Ensure that the unit is able to meet the minimum required dissipation mode airflows. These required minimum airflow rates during Dissipation Mode are listed in Table 13. They are based on the total system refrigerant charge quantity.

Table 13 — Minimum Dissipation Air Flows

MINIMUM DISSIPATION AIR FLOW (cfm)	
UNIT	**cfm**
50FEQA04	220
50FEQA05	280
50FEQA06	300
50FEQM07	350

Table 14 details the required operational checks to ensure proper dissipation system function.

Table 14 — Dissipation System Required Operational Checks

NORMAL OPERATION				
TEST NO.	UNIT DEMAND	COMPRESSOR	INDOOR FAN	ELECTRIC/ GAS HEAT
1	None	Off	Off	Off
2	Cool	On	On	Off
3	Heat	On	On	On
DISSIPATION ACTIVATED				
4	None	Off	On	Off
5	Cool	Off	On	Off
6	Heat	Off	On	Off

Figure 59 shows the flash codes displayed on the Dissipation Control Board.

Troubleshooting

For all flash codes, first try power cycling the system to remove the code.

No Power

Verify the wiring to/from pins 1 and 8 on the power harness plug. Check the 24V system wiring from the transformer.

See Table 15 for details on the operating status and troubleshooting of the Dissipation system for the various flash codes.

STATUS CODE DESCRIPTION FOR CONTROL BOARD

STATUS LED (YELLOW)	ERROR MODE
ON	NORMAL OPERATION
OFF	HARDWARE FAILURE
1 Flash	SENSOR 1 R454B leak
2 Flash	SENSOR 1 OPEN
3 Flash	5 MINUTE MITIGATION OFF DELAY
4 Flash	BLOWER OUTPUT NOT OPERATING
5 Flash	SENSOR 1 FAULT
6 Flash	TEST BUTTON STUCK
7 Flash	K1 OR K4 RELAY WIRING INVERTED
8 Flash	K1 OR K4 RELAY WIRING SHORTED
9 Flash	SENSOR 2 R454B LEAK
10 Flash	SENSOR 2 OPEN (Sensor config jumper)
11 Flash	SENSOR 2 FAULT
12 Flash	INCORRECT TEMP SENSOR
13 Flash	FIRE/SMOKE OVERRIDE

Test Button Operation Notes:

1. Test mode (60 second mitigation test) = Press test button for 1 second
2. Alarm code history (last 7 codes from 1 week history) = Press test button for 10 seconds
3. Clear alarm history = Press test button 3 times consecutively

48TC006475 REV A

Fig. 59 — Dissipation Control Cover Label

Table 15 — Status LED Troubleshooting Table

STATUS LED	REASON	CONTROL VERBIAGE	MODE
Flashing 1	Sensor 1 ≥ 20% LFL	REFRIG DISSIPATION ACTIVE	Dissipation in Process
Flashing 2	Sensor 1 Open	REFRIG SENSOR OPEN	Dissipation in Process
Flashing 3	5 Minute Blower Operating, Sensor < 20% LFL and sensors are not opened (done after fault 1, 2, 9 and 10)	DISSIPATION OFF DELAY ACTIVE	Dissipation in Process
Flashing 4	0 VAC sensed on G output.	BLOWER OUTPUT NOT OPERATING	Dissipation in Process
Flashing 5	Fault with the A2L digital sensor	REFRIG SENSOR FAULT	Dissipation in Process
Flashing 6	If KY1 is stuck pressed for more than 30 seconds.	TEST BUTTON STUCK	To prevent a shorted KY1 to keep the dissipation running continuously.
Flashing 7	Y out switched with Y in or W out switched with W in	Y (K4) OR W (K1) WIRING INVERTED	Normal mode
Flashing 8	Y or W shorted (relay detects both sides are high)	Y (K4) OR W (K1) OUTPUT SHORTED TO Y (K4) OR W (K1) INPUT	Normal mode
Flashing 9[a]	Sensor 2 ≥ 20% LFL	SENSOR 2 DISSIPATION ACTIVE	Dissipation in Process
Flashing 10[a]	Sensor 2 Open	SENSOR 2 OPEN	Dissipation in Process
Flashing 11[a]	Fault with the second A2L digital sensor	SENSOR 2 FAULT	Dissipation in Process
Flashing 12	High temperature sensor attached on commercial	OVERCURRENT INCORRECT SENSOR	Normal mode
Flashing 13	G input signal is lost. Indicates another unit safety will override dissipation.	EXT SAFETY OVERRIDE	Normal mode

NOTE(S):

a. There is only one sensor mounted in these units. This table represents the standard label being put on all commercial equipment. The hardware changes only allow one sensor to be connected to the board; the software remains the same for a one or two sensor board. Although unlikely these flash codes may appear if the board malfunctions.

LEGEND

LFL — Lower Flammable Limit

ECONOMIZER SYSTEMS

The unit may be equipped with a factory-installed or accessory (field-installed) economizer system. Two types are available: one with a logic control system (EconomizerONE) and one without a control system (EconoMi$er® 2). See Fig. 60-61 for component locations on each type.

Economizers use direct-drive damper actuators.

IMPORTANT: Any economizer that meets the economizer requirements as laid out in California's Title 24 mandatory section 120.2 (fault detection and diagnostics) and/or prescriptive section 140.4 (life-cycle tests, damper leakage, 5 year warranty, sensor accuracy, etc), will have a label on the economizer. Any economizer without this label does not meet California's Title 24. The 5 year limited parts warranty referred to in section 140.4 only applies to factory installed economizers. Please refer to your economizer on your unit.

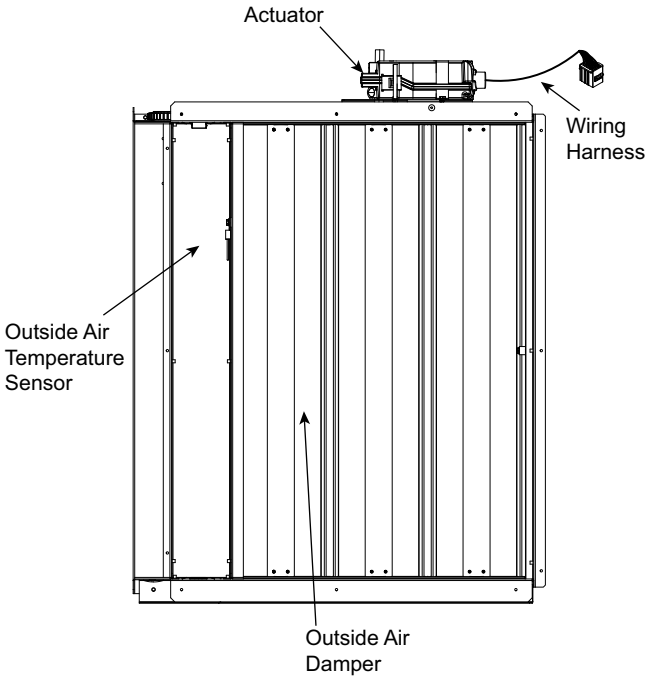

Fig. 60 — EconomizerONE Component Locations (CRECOMZR108A00 Shown)

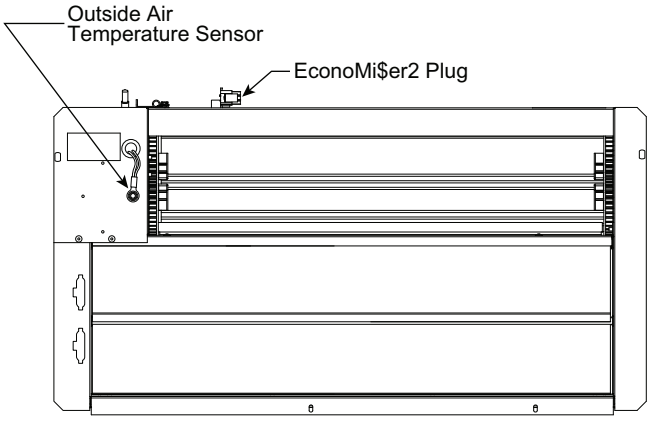

Fig. 61 — EconoMi$er 2 Component Locations

EconoMi$er 2

IMPORTANT: The optional EconoMi$er® 2 does not include a controller. The EconoMi$er 2 is operated by a 4 to 20 mA signal from an existing field-supplied controller. See Fig. 62 for wiring information.

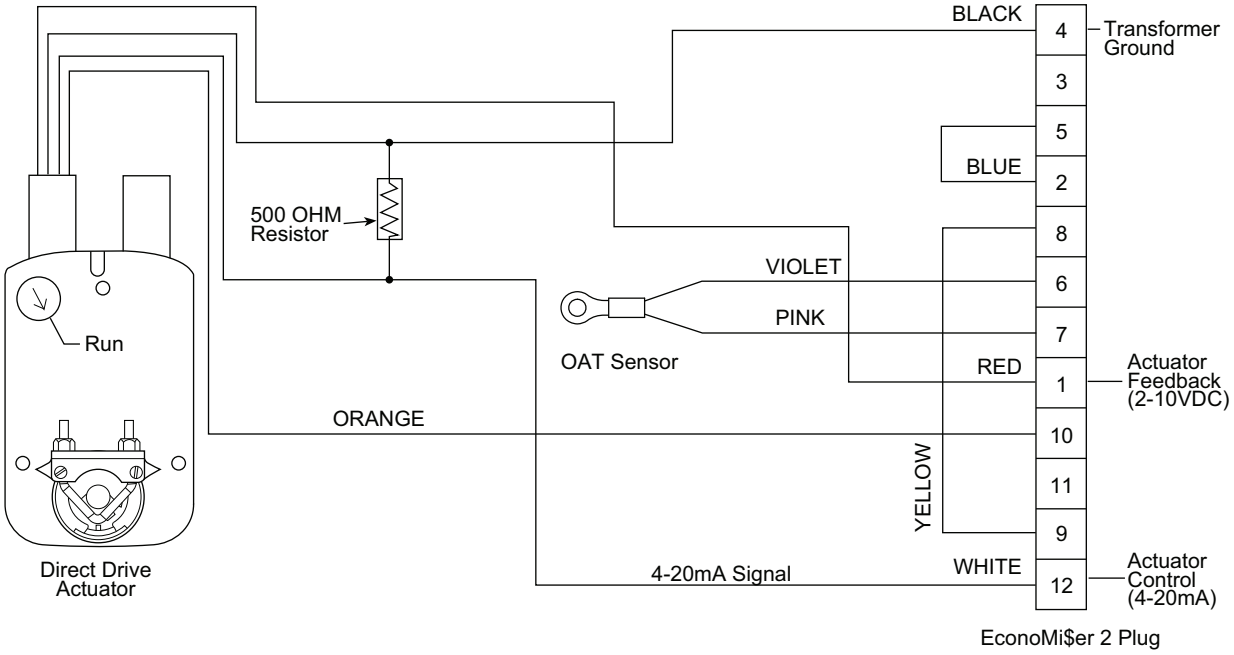

Fig. 62 — EconoMi$er 2 with 4 to 20 mA Control Wiring

EconomizerONE (Field-Installed Accessory)

MOUNTING, INSTALLATION, AND WIRING

⚠ WARNING

Failure to follow this caution may result in damage to equipment. Be sure to allow enough time for compressor startup and shutdown between checkout tests so that the compressors do not short-cycle.

Mounting the Economizer Controller Base Module

Before mounting, leave specific mounting clearances so that there is space for mounting, wiring, and servicing. See Fig. 63 and Table 16 for economizer controller wiring details.

POL224 can be mounted to sheet metal. Use two no. 6-3/4 in. self-tapping screws to mount POL224. Order screws and spacers separately, as they are not provided with the products.

See the installation instructions included with the controller for detailed clearance requirements and graphical mounting instructions.

Mounting Devices Connected to the Economizer Controller

Devices like damper actuators, sensors (temperature sensor, humidity sensor, combination temperature and humidity sensor, CO_2 sensor), thermostats, and exhaust fans can be connected to the economizer controller. For information on how to mount the devices, see the device's installation instructions.

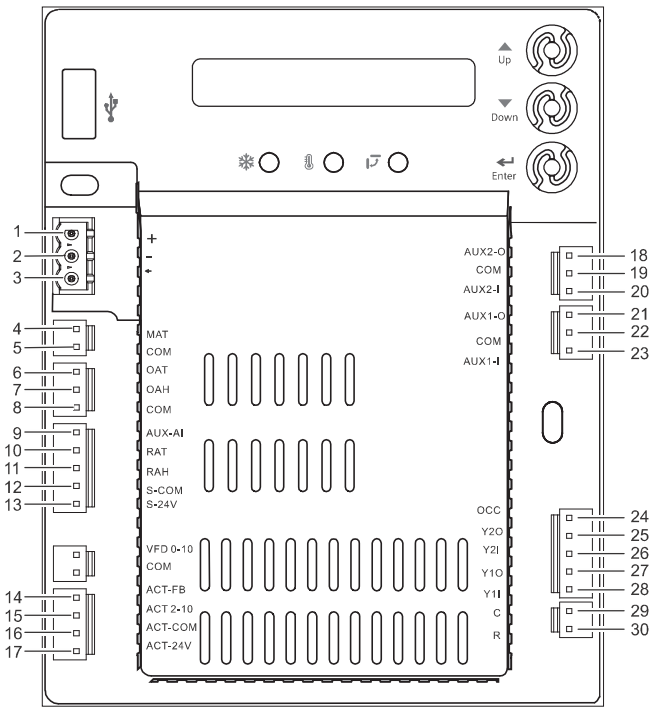

Fig. 63 — Economizer Control Wiring

Table 16 — Economizer Control Wiring Settings

NO.	LABEL	TYPE	DESCRIPTION
1	+	RS485 Modbus A	Line A
2	-	RS485 Modbus B	Line B
3	¬	GND_ISO	Earth Ground
4	MAT	Type II NTC 10K or 0-10 vdc	Mixed or Discharge Air Temperature Sensor
5	COM	COM	Mixed or Discharge Air Temperature Sensor Common
6	OAT	Type II NTC 10K or 0-10 vdc	Outside Air Temperature Sensor
7	OAH	0-10 vdc or 4-20mA	Outside Air Relative Humidity Sensor
8	COM	COM	Outside Air Temperature Sensor or Outside Air Relative Humidity Sensor Common
9	AUX-AI	0-10 vdc, 2-10 vdc or 0-5 vdc	Air Quality Sensor or Pressure Sensor
10	RAT	Type II NTC 10K or 0-10 vdc	Return Air Temperature Sensor
11	RAH	0-10 vdc or 4-20mA	Return Air Relative Humidity Sensor
12	S-COM	COM	24 vac Common
13	S-24V	24 vac	24 vac Power Out to Sensors
14	ACT-FB	2-10 vdc	Damper Actuator Feedback
15	ACT2-10	2-10 vdc	Damper Actuator Output
16	ACT-COM	COM	Damper Actuator Output Common
17	ACT-24V	24 vac	24 vac Power Out to Damper Actuator
18	AUX2-O	24 vac OUT	Configurable: • Cooling Stage 3 Output • Exhaust Fan (1 or 2) • System Alarm Output (Title 24)
19	COM	COM	24 vac Common
20	AUX2-1	24 vac IN	Configurable: • Cooling Stage 3 Input • Shut Down • Heat Conventional (W1) • Heat Pump Changeover (reversing valve OB) • Pre-Occupancy
21	AUX1-O	24 vac OUT	Configurable: • Cooling Stage 3 Output • Exhaust Fan (1 or 2) • VFD On/Off (Variable Speed Supply Fan Enable or Disable) • System Alarm Output (Title 24)
22	COM	COM	24 vac Common
23	AUX1-I	24 vac IN	Configurable: • Cooling Stage 3 Input • Shut Down • Heat Conventional (W1) • Heat Pump Changeover (reversing valve OB) • Pre-Occupancy
24	OCC	24 vac IN	Occupancy Input
25	Y2O	24 vac OUT	Cooling Stage 2 Output to Stage 2 Mechanical Cooling
26	Y2I	24 vac IN	Cooling Stage 2 Input from Commercial Thermostat
27	Y1O	24 vac OUT	Cooling Stage 1 Output to Stage 1 Mechanical Cooling
28	Y1I	24 vac IN	Cooling Stage 1 Input from Commercial Thermostat
29	C	COM	24 vac Common
30	R	24 vac	24 vac Power

CONNECTING PERIPHERAL DEVICES TO THE ECONOMIZER CONTROLLER

See Fig. 64-68 for wiring details.

- Outside Air: Connect to the OAT and COM terminals of the device.
- Return Air (Differential): Connect to the RAT and S-COM terminals of the device.
- Mixed Air: Connect to the MAT and COM terminals of the device.

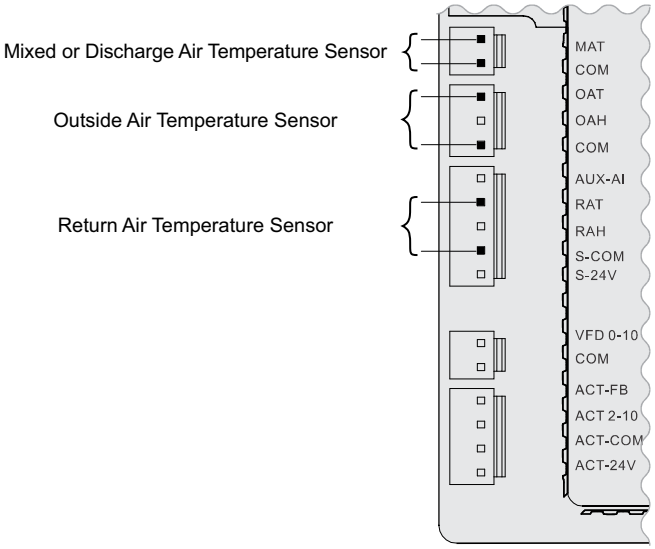

Fig. 64 — Temperature Sensor Connection

- Outside Air Relative Humidity: Connect to the OAH and COM terminals of the device.
- Return Air Relative Humidity: Connect to the RAH and S-COM terminals of the device.

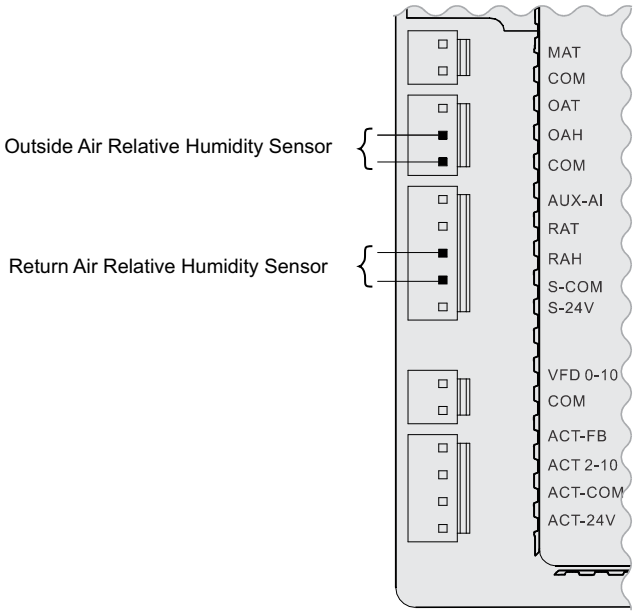

Fig. 65 — Relative Humidity Sensor Connection

- Outside Combination Temperature/ Humidity: Connect to the OAT, COM, and OAH terminals of the device.
- Return Combination Temperature/ Humidity: Connect to the RAT, S-COM, and RAH terminals of the device.

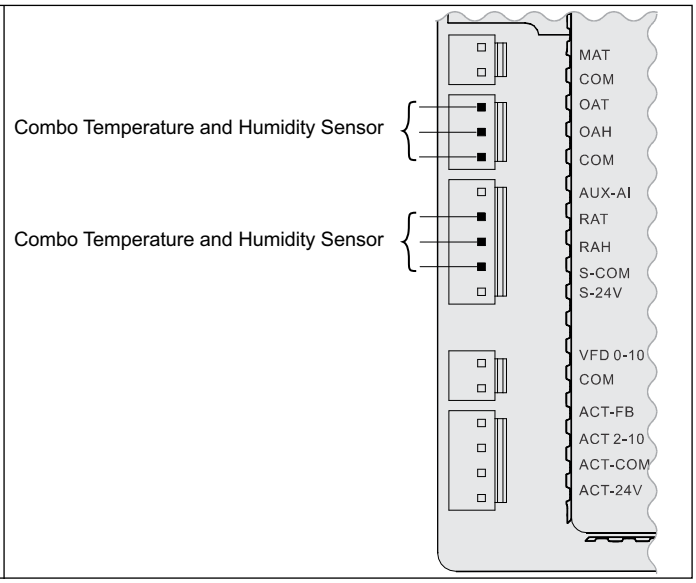

Fig. 66 — Combination Temperature/Humidity Sensor Connection

- Connect to the AUX-AI, S-COM, and S-24V terminals of the device.

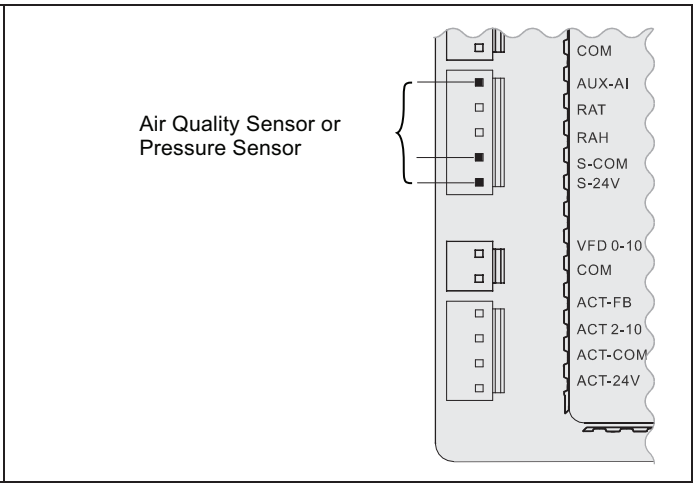

Fig. 67 — CO_2/Pressure Sensor Connection

- Connect to the ACT 2-10, ACT-COM, and ACT-24V terminals of the device.

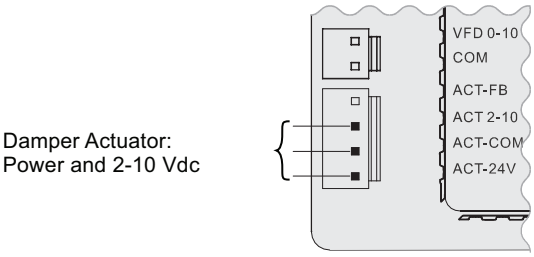

Fig. 68 — Damper Actuator Connection

EconomizerONE (Factory Option)

ECONOMIZER SETTINGS

Interface Overview

EconomizerONE

This option consists of the following:

- Low Leak Economizer Assembly
- HH79NZ039 OA (Outdoor Air) Dry Bulb Sensor
- HH79NZ039 Mixed Air Sensor
- POL224 Controller
- 50HE005489 Harness

POL224 Economizer Module Wiring

The economizer controller used on electromechanical units is a Siemens POL224, which is to be located in the RTU base unit's control box. See Fig. 69 for button description of the POL224 controller. Refer to the unit dimensional drawing for the location of the control box access panel.

The POL224 controller provides the following:

1. One-line LCD (Liquid Crystal Display) — After a period of inactivity, the controller displays the default HMI (Human Machine Interface) screen (free cooling status, 1FREE-COOL YES or 1FREE COOL NO). See Fig. 69-73.
2. Operation button (Up button) — Move to the previous value, step, or category.
3. Operation button (Down Button) — Move to the next value, step, or category.
4. Operation Button (Enter Button):
   a. Press Enter to edit the current value or option.
   b. Press Enter to confirm a newly selected value or option.
   c. Press Enter + Up to jump up one entire category.
   d. Press Enter + Down to jump down one entire category.

User Interface and Keypad

The controller user interface consists of an LCD display and a 3-button keypad for input. The LCD is a 16 character by 1-line dot matrix display. The keypad is used to navigate and change the desired menu items on the display. See Fig. 69.

The Climatix™[1] mobile application allows for installation, commissioning, and servicing. Scanning a QR code on the controller allows users to download the mobile application on Android™[1] or Apple iOS®[1], but a Wi-Fi/WLAN stick is needed. See Fig. 69 and 70. Plug Wi-Fi/WLAN stick into controller USB port for temporary connection for mobile application setup. The Wi-Fi/WLAN stick can be used for multiple units.

Menu Structure

Menus are displayed in the economizer controller via categories. There are eight first-level menus, each of which is represented by a number at the beginning of the line on the LCD. Pressing Enter + Up or Down can toggle between different first-level menus. Submenus follow the numbered first-level menus closely. Pressing Up or Down can toggle between different submenus.

At the end of the line, the LCD displays the value of the current submenu (if any). If the value is editable, pressing Enter will put the terminal in Edit mode. The value is then highlighted for change. After making a change by pressing Up or Down, press Enter to confirm the change and exit the Edit mode. See Fig. 72.

Powering the Economizer Controller

The POL224 controller power connections are made through the economizer harness (P/N 50HE005489). Connections from the harness are made to the C (24 vac common) and R (24 vac power) terminals of the economizer controller. See Fig. 71.

LED Indication

NOTE: If different faulty events occur at the same time, then sensor/DAC LED lights up following the priority below: Red → Yellow → Off. For example, if there is a humidity sensor error and air temperature failure at the same time, then the sensor LED turns red rather than yellow. See Fig. 73 and Table 17.

IMPORTANT: After the Economizer controller enters the running state, it may take one minute for peripheral devices to complete initialization. Before that, LED indication might be unstable.

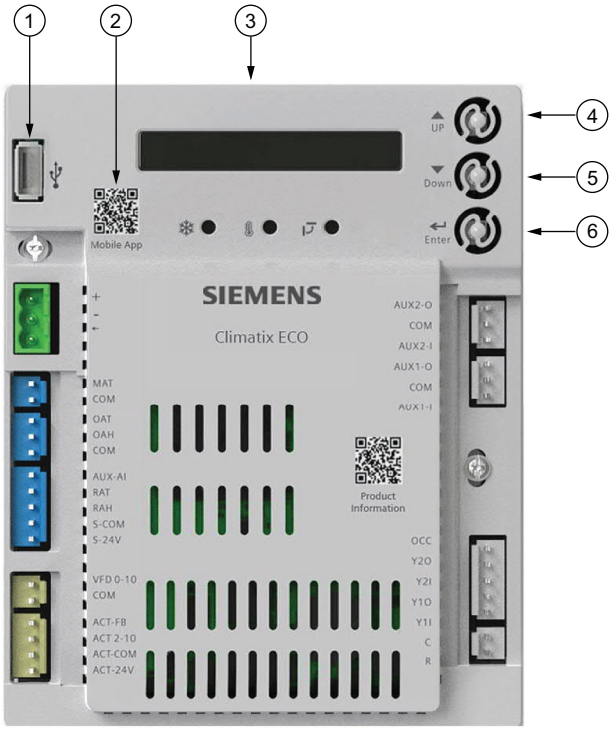

NOTE: QR codes in this image are for reference only.

NO.	DESCRIPTION
1	USB port for Wi-Fi/WLAN stick.
2	QR code to download Climatix™ mobile application.
3	One-line LCD. After a period of inactivity, the controller displays the default: HMI screen (free cooling status, 1FREECOOL YES or 1FREECOOL NO)
4	Operation button (Up button) - Move to the previous value, step or category.
5	Operation button (Down button) - Move to the next value, step or category.
6	Operation button (Enter button): • Press to edit the current value or option. • Press to confirm a newly selected value or option. • Press Enter + Up to jump up one entire category. • Press Enter + Down to jump down one entire category.

Fig. 69 — POL224 Controller

NOTE: QR codes in this image are for reference only.

Fig. 70 — Wi-Fi/WLAN Stick

1. Third-party trademarks and logos are the property of their respective owners.

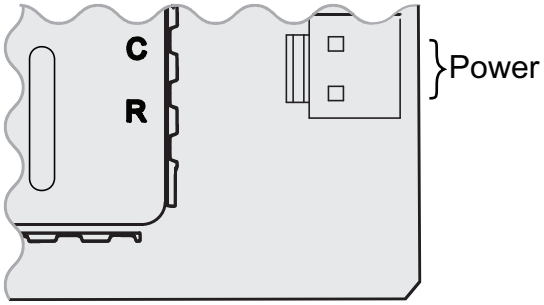

Fig. 71 — Powering the EconomizerONE Controller

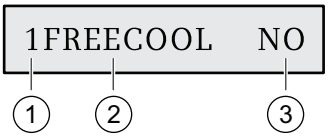

No.	Description
1	Number representing the first-level menu of **Status Display**. Different numbers represent different menus: 1: Status Display 2: Basic Settings 3: Advanced Settings 4: Alarms 5: Enter Configuration State and Reset 6: I/O Config 7: Testing 8: Enter Running State
2	Submenu[a]
3	Value of the current submenu[a]

a. See "Setup and Configuration" on page 58 for detailed submenus together with possible values or ranges.

Fig. 72 — Menu Structure Descriptions

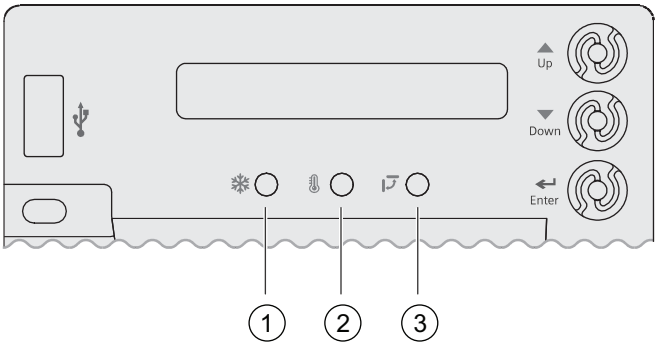

NO.	DESCRIPTION
1	Free Cooling LED
2	Sensor LED
3	DAC LED

Fig. 73 — LED Indication

Table 17 — LED Indication

STATUS	FREE COOLING LED	SENSOR LED	DAC LED
Commissioning mode	Yellow Blinking	Yellow Blinking	Yellow Blinking
Power start up	Yellow On	Yellow On	Yellow On
Free cooling is running	Green On	—	—
Free cooling is available but not running	Green Blinking	—	—
Not economizing when it should	Red Blinking	—	—
Economizing when it should not	Red On	—	—
Sensor working okay	—	Green On	—
Humidity sensor error	—	Yellow On	—
CO_2 sensor error	—	LED Off	—
Air temperature fault/failure	—	Red On	—
Excess outdoor air	—	Red Blinking	—
Damper working okay	—	—	Green On
Damper not modulating	—	—	Red On
Damper slippage	—	—	Red Blinking
Damper unplugged	—	—	Fast Red Blinking
Terminal ACT-FB is configured but no available feedback signal	—	—	LED Off

Functions

Free Cooling Economizing

Free cooling uses unconditioned outside air to cool the space directly. The economizer controller enables or disables free cooling after it judges which control mode is active. It also uses hysteresis to ensure a smooth switchover.

Depending on the sensors that are used, there are four different control modes. In different control modes, the assessed conditions are different. See Table 18.

Default Hysteresis Setting

Hysteresis setting (DB) defaults to 2°F (–17°C). See Fig. 74.

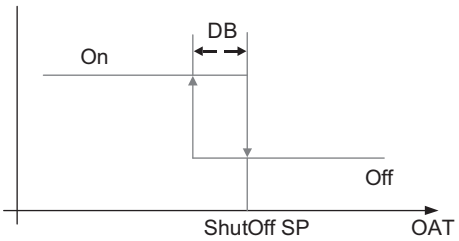

LEGEND
OAT — Outside Air Temperature
DB — Deadband
SP — Set Point

Fig. 74 — Hysteresis Settings

Table 18 — Free Cooling Functions

CONTROL MODE	SENSORS USED	ENABLE FREE COOLING?
Control Mode 1 • Fixed Dry bulb	OA (outside air) Temperature Sensor and MA (Mixed Air) Temperature Sensor	The outside air dry bulb temperature is compared with the set temperature shutoff setpoint. If the outside air dry bulb temperature is below the temperature shutoff setpoint, then the outside air is used to meet all or part of the cooling demand.
Control Mode 2 • Differential Dry bulb (Dual Dry bulbs)	OA Temperature Sensor, RA (Return Air) Temperature Sensor, and MA Temperature Sensor	The outside-air dry bulb temperature is compared with the return air dry bulb temperature. If both OAT and RAT are higher than the temperature high limitation, then free cooling is prohibited. If OAT or RAT is lower than the temperature high limitation and the outside air dry bulb temperature is lower than the return air dry-bulb temperature, then the outside air is used to meet all or part of the cooling demand.
Control Mode 3 • Combination Fixed Enthalpy and Fixed Dry bulb Control	OA Temperature and Humidity Sensor and MA Temperature Sensor	The outside air dry bulb temperature and enthalpy are compared with the set temperature and enthalpy shutoff setpoints. If the outside air enthalpy is lower than the set enthalpy shutoff setpoint, and the outside air dry bulb temperature is lower than the temperature shutoff setpoint, then the outside air can be used for economizing.
Control Mode 4 • Combination of Differential Enthalpy and Fixed Dry bulb	OA Temperature and Humidity Sensor, RA Temperature and Humidity Sensor, and MA Temperature Sensor	The outside air dry bulb temperature and enthalpy are compared with the temperature shutoff setpoint and return air enthalpy. If both OA enthalpy and RA enthalpy are higher than the enthalpy high limitation, then free cooling is prohibited. If OA enthalpy or RA enthalpy is lower than the enthalpy high limitation, outside air enthalpy is lower than the return-air enthalpy, and the outside air dry bulb temperature is lower than the set temperature shutoff setpoint, then outside air can be used for economizing.

Damper Modulation During Free Cooling

Once outside air is suitable for free cooling, the controller modulates the damper based on MAT (mixed air temperature, default) or OAT (outside air temperature). Refer to Table 18.

If MAT is used when free cooling is enabled, MAT setpoint (**3MAT SET**, configurable in "Parameter Settings — Advanced" on page 61) is used for MAT modulating. When MAT falls below the anti-freeze setpoint (**3FRZ PROT**), the damper either fully closes or opens to the minimum position (configurable in "Parameter Settings — Advanced" on page 61).

1. If MAT is lower than MAT setpoint, then the damper is modulated to maintain MAT setpoint, towards fully closed or open to the minimum position based on occupancy status if MAT continues dropping.
2. If MAT is in the range [MAT setpoint, (MAT setpoint + neutral zone band [1°F by default])], then the damper position does not change.
3. If MAT is higher than (MAT setpoint + neutral zone band), then the damper opens towards fully open.
4. If MAT is 10°F higher than MAT setpoint, then the damper fully opens to 100%.

If OAT is used when there is a cooling demand, the damper can be opened to different positions depending on different outside air temperatures:

1. If outside air is higher than 50°F but lower than the temperature shutoff setpoint, then the damper is fully open.
2. If outside air is higher than OAT lockout setpoint but lower than 50°F, then linear modulation is applied when only Cooling Stage 1 input (Y1I) is ON. Result of the following formula indicates the damper's open position:

   ([OAT - OAT Lockout Setpoint] / [50 - OAT Lockout Setpoint]) * (80% - MIN POS) + MIN POS

   NOTE: When both free cooling and mechanical cooling are on, damper remains fully open regardless of the modulating logic.

Location-Based Shutoff Setpoints

The economizer controller can get location-based temperature and enthalpy shutoff setpoints automatically if it is connected to the Climatix™ mobile application. Once a Wi-Fi/WLAN stick is plugged in, the economizer controller can establish network connection with the mobile application. The temperature and enthalpy shutoff setpoints obtained via the phone or tablet's GPS functionality can then be synchronized to the economizer controller.

Cooling Stage Operation

The economizer controller accepts inputs for 1 and 2-stage cooling inputs and reroutes to the RTU through the relay connection Y1 and Y2.

The operation of the cooling stages is determined by the availability of Free Cooling provided by the economizer operation mode. See Cooling Stage I/O Logic Tables 19-20. Based on the use of Free Cooling, the operating modes are as follows:

- Y1 is Stage 1 Cooling Demand.
- Y2 is Stage 2 Cooling Demand.
- Free Cooling is always the first cooling stage.
- Cooling Stage 1 call from the Commercial Thermostat (Y1) energizes the Y1 input to the economizer controller.
- Cooling Stage 2 call from the Commercial Thermostat (Y2) energizes the Y2 input to the economizer controller.

Table 19 — 1 and 2-Stage Cooling Stage I/O Logic

ECONOMIZER CONDITION MET	Y1	Y2	COOLING STAGE 1	COOLING STAGE 2
NO	On	On	On	On
NO	On	Off	On	Off
NO	Off	Off	Off	Off
YES	On	On	On	On/Off[a]
YES	On	Off	Off	Off
YES	Off	Off	Off	Off

NOTE(S):

a. If OAT ≤ MAT setpoint (3MAT SET), then Relay 2 is always **OFF** to disable Cooling Stage 2. Otherwise, if both stages of cooling (Y1 and Y2) are **ON** for more than a set time (15 minutes by default), Y2 remains ON, and the OAT is higher than MAT setpoint, then Relay 2 energizes to allow Y2 pass-through to enable Cooling Stage 2.

Table 20 — 2-Stage Cooling Stage I/O Logic

ECONOMIZER CONDITION MET	Y1	Y2	COOLING STAGE 1	COOLING STAGE 2
NO	On	On	On	On
NO	On	On	On	On
NO	On	Off	On	Off
NO	Off	Off	Off	Off
YES	On	On	On	On
YES	On	On	On	On/Off
YES	On	Off	Off	Off
YES	Off	Off	Off	Off

IMPORTANT: The economizer controller can tolerate thermostat wiring mismatch, e.g. Thermostat Y1 → Economizer Y2-In, Thermostat Y2 → Economizer Y1-In. The handling logic is Stage =Y1I + Y2I. For example, Y1O =1 if Stage > =1, Y2O =1 if Stage > = 2.

Multi-Speed Fan Support

The economizer controller supports connection to 2-speed fans. When the unit is equipped with a multi-speed fan, the damper responds to multiple fan speeds via multiple minimum positions **(MIN POS)** to keep minimum airflow. See Tables 21-23.

Table 21 — Damper MIN POS for 2-Speed Fan[a]

Y1	Y2	W1 OR O/B	SPD L	SPD H	POS L	POS H
X	**—**	—	X	—	X	—
X	**X**	—	—	X	—	X
—	**—**	X	—	X	—	X

NOTE(S):

a. A multi-speed fan is not controlled by the economizer controller but by an external logic board.

LEGEND

POS L — Damper MIN POS for Low-Speed Fan
POS H — Damper MIN POS for High-Speed Fan
SPD L — Low-Speed (Fan)
SPD H — High-Speed (Fan)

Table 22 — Different Fan Speeds with Different Configured Outputs[a]

FAN TYPE	1-SPEED COOLING[b]	2-STAGE COOLING[b]
1-SPEED FAN[c]	• Spd H (regardless of cooling demand, OCC=Yes)	• Spd H (regardless of cooling demand, OCC=Yes)
2-SPEED FAN[c]	• Spd L (0 or 1 cooling demand) • Spd H (2 cooling demands)	• Spd L (0 or 1 cooling demand) • Spd H (2 cooling demands)

NOTE(S):

a. If a single-speed fan connects to the Controller, it opens directly on the call of cooling/heating. The damper position is Pos H.
b. Configured by Y1O or Y2O.
c. Configured by 6FAN.

LEGEND

Spd L — Low Speed (Fan)
Spd H — High Speed (Fan)

Table 23 — Different Damper Minimum Positions with Different Configured Outputs

FAN TYPE	1-SPEED COOLING[a]	2-STAGE COOLING[a]
1-SPEED FAN[b]	• Pos H (regardless of cooling demand, OCC=Yes)	• Pos H (regardless of cooling demand, OCC=Yes)
2-SPEED FAN[b]	• Pos H (regardless of cooling demand, OCC=Yes)	• Pos L (0 or 1 cooling demand) • Pos H (2 cooling demands)

NOTE(S):

a. Configured by Y1O or Y2O.
b. Configured by 6FAN.

LEGEND

Pos L — Damper MIN POS for Low-Speed Fan
Pos H — Damper MIN POS for High-Speed Fan

If DCV (demand controlled ventilation) is enabled, each fan speed corresponds to two damper position ventilation setpoints (VENT MIN, VENT MAX), e.g., Pos L corresponds to 2VENTMIN L... 2VENTMAX L. See Table 24 for Different Damper Position Setting with Different Configured Outputs with DCV enabled.

If CO_2 sensor is connected but DCV is disabled, then each fan speed corresponds to one minimum damper position ventilation setpoint. See Table 25 for Different Damper Position Setting with Different Configured Outputs with DCV disabled.

Table 24 — Different Damper Position Settings with Different Configured Outputs (DCV is Enabled)

FAN TYPE	1-STAGE COOLING[a]	2-STAGE COOLING[a]
1-SPEED FAN[b]	• 2VENTMIN H to 2VENTMAX H (regardless of cooling demand, OCC=Yes)	• 2VENTMIN H to 2VENTMAX H (regardless of cooling demand, OCC=Yes)
2-SPEED FAN[b]	• 2VENTMIN H to 2VENTMAX H (regardless of cooling demand, OCC=Yes)	• 2VENTMIN L to 2VENTMAX L (0 or 1 cooling demand) • 2VENTMIN H to 2VENTMAX H (2 cooling demands)

NOTE(S):

a. Configured by Y1O or Y2O.
b. Configured by 6FAN.

Table 25 — Different Damper Position Settings with Different Configured Outputs (DCV is Disabled, CO_2 sensor is connected)

FAN TYPE	1-STAGE COOLING[a]	2-STAGE COOLING[a]
1-SPEED FAN[b]	• 2VENTMIN H (regardless of cooling demand, OCC=Yes)	• 2VENTMIN H (regardless of cooling demand, OCC=Yes)
2-SPEED FAN[b]	• 2VENTMIN H (regardless of cooling demand, OCC=Yes)	• 2VENTMIN L (0 or 1 cooling demand) • 2VENTMIN H (2 cooling demands)

NOTE(S):

a. Configured by Y1O or Y2O.
b. Configured by 6FAN.

Cooling Delay via Increasing Fan Speed

If there is cooling demand while outside air is suitable for economizing, then the economizer controller tries to increase fan speed to maximize the use of outside air first. If the cooling demand is not reached within a set time, then mechanical cooling will be enabled.

Typical field application:

1. Prerequisites:
   - Outside air is suitable for economizing and free cooling is ON.
   - Fan connected to the controller supports multiple speeds. Cooling delay function does not work if only a one-speed fan is connected to the controller.
2. If it is a 2-speed fan and there are two cooling demand inputs/outputs and Y1-Input is called, then the controller sets fan speed to Speed Low. Damper is fully open (100%).

   If Y2-Input is also called, then the controller increases fan speed to Speed High and starts fan delay (2FAN DLY) time. After the delay time runs out, the controller starts Y1-Output.

Demand Controlled Ventilation (DCV)

If a field-installed CO_2 sensor is connected to the EconomizerONE controller, then a demand controlled ventilation strategy will operate automatically. As the CO_2 level in the space increases above the setpoint (on the EconomizerONE controller), the minimum position of the dampers will be increased proportionally until the Maximum Ventilation setting is reached. As the space CO_2 level decreases because of the increase in fresh air, the outdoor damper will follow the higher demand condition from the DCV mode or from the free cooling mode.

The controller modulates the outside air damper based on the CO_2 level through the ppm value selected between the range of 500 and 2000 ppm. The measured CO_2 concentration value is compared with the set DCV setpoint. If the measured CO_2 concentration value is below the DCV setpoint, then keep the damper to the minimum position. Otherwise, enable DCV. Once DCV is enabled, the DCV PID starts to run to control the indoor CO_2 concentration value towards the DCV setpoint. The damper opens to the maximum position.

NOTE: DCV is disabled if the controller receives no occupancy signal.

DCV operation is available in Occupied and Unoccupied periods with the EconomizerONE system. However, a control modification will be required on the unit system to implement the Unoccupied period function. Refer to controller accessory installation instruction manual for further controls and command operation information.

High Humidity Limitation

The economizer controller applies high limit of humidity to enthalpy-based economizing. When the OA dew point is below the dew point setpoint, enthalpy-based economizing is available. Otherwise, enthalpy-based economizing is unavailable.

Anti-Freeze Protection

The economizer controller initiates the anti-freeze protection if MAT or OAT temperature falls below the anti-freeze setpoint.

MAT-Based Anti-Freeze Protection

1. If MAT temperature falls below the anti-freeze setpoint (3FRZ PROT), then:
   - The controller closes both damper and compressor if unit type is conventional unit and cooling/heating conventional operation mode is enabled.
   - The controller closes the damper if unit type is heat pump and heat pump operation mode is enabled.
2. If the MAT sensor fails, MAT is substituted by OAT to continue the anti-freeze assessment. If OAT fails too, the controller closes the damper immediately.

OAT-Based Anti-Freeze Protection

If OAT temperature falls below the OAT lockout setpoint (3OAT LOCK):

1. The controller stops the compressor from running if unit type is conventional unit and cooling/heating conventional operation mode is enabled.
2. The controller compressor is bypassed if unit type is heat pump and heat pump operation mode is enabled.

Exhaust Fan Operation

Up to two exhaust fans can be connected to the economizer controller.

- If Exhaust Fan 1 is connected and configured, then Exhaust Fan 1 parameter group (L, M, and H) is available, depending on fan configuration.
- If Exhaust Fan 2 is connected and configured, then Exhaust Fan 2 parameter group (L, M, and H) is available, depending on fan configuration.
- The controller energizes Exhaust Fan Relay 1 and Exhaust Fan Relay 2 if the damper position reaches Exhaust Fan 1 parameter setting and Exhaust Fan Relay 2 parameter setting respectively. The selection of L, M, or H matches the current fan speed.

NOTE: If terminal ACT-FB is configured, then the damper position is the damper feedback position. If feedback signal is unavailable, it is the simulated position.

Occupancy Input

The economizer controller can receive an occupancy signal from the connected thermostat or work under Occupied mode all the time. This is configurable in the Thermostat setup from the Climatix™ mobile application or under the I/O Configuration menu on the inbuilt display. See "Parameter Settings — I/O Configurations" on page 61 for more information.

IMPORTANT: On the call of cooling, when the controller is configured to receive signal from the thermostat but the thermostat is working under the Unoccupied mode, the damper is fully closed if outside air is not suitable for economizing. If outside air is suitable for economizing, the damper is fully open.

Pre-occupancy Purge

The pre-occupancy purge demand comes from the configuration of the Auxiliary features in the Climatix™ mobile application or 6AUX2-I under the I/O Configuration menu on the inbuilt display.

During pre-occupancy purge on the call of heating or when there is no cooling/heating demand, the damper position is MIN POS.

During pre-occupancy purge on the call of cooling, the damper position is MIN POS if outside air is not suitable for economizing. If outside air is suitable for economizing, then the damper is fully open.

Airflow Commissioning

Airflow measurement station (differential pressure signal) can connect to the controller temporarily to run airflow commissioning to calculate, calibrate, and store 4 fan speed characteristic curves automatically at damper positions 40%, 60%, 80%, and 100%. The controller places the damper to a proper position to meet minimum or any other airflow requests in cfm. Users can enable this function only from the Climatix™ mobile application if the related function is available in the current mobile application version.

Fault Detection and Diagnostics

The economizer controller can detect and diagnose free cooling faults, sensor operation faults, and damper modulating faults. It can also report anti-freeze and shutdown notifications and actuator errors. Following is a list of all detectable or reportable information:

- Sensor disconnected or has no signal.
- Sensor short or high signal (under range or over range).
- Not economizing.
- Unexpected economizing.
- Excess outdoor air.
- Damper not modulating.
- Input power monitor and brownout. After detecting brownout, the economizer controller enters the brownout protection mode and disables all of the relay outputs.
- Anti-freeze notifications.
- Shutdown notifications.
- Actuator errors.
- Too low or too high leaving air temperature.
- Cooling/heating error.
- Damper actuator cycle count. Parameter **1ACT CNT** indicates number of times actuator has cycled. It is resettable via HMI item **8ACT CNT RESET**.

IMPORTANT: The first 6 faults are detectable via LEDs or alarm reports on the LCD. See LED Indication on page 49 and Alarms on page 62 for fault indications. These faults can also be displayed in the Operating section of the Climatix™ mobile application.

Firmware Update

NOTE: Back up configurations before firmware update. All the previous configuration data are erased after firmware update. NOTE: Contact Application Engineering for more information on support for firmware.

IMPORTANT: If the controller enters the configuration state for the convenience of I/O configurations, then users can manually switch to the running state after finishing configurations. To do so, press Enter + Up at the same time, and then press Enter to confirm the switch after 8RUN STATE appears on the LCD.

⚠ WARNING

Failure to follow this caution may result in damage to equipment. Be sure to allow enough time for compressor startup and shutdown between checkout tests so that the compressors do not short-cycle.

Mounting Devices Connected to the Economizer Controller

Devices like damper actuators, sensors (temperature sensor, humidity sensor, combination temperature and humidity sensor, CO_2 sensor), thermostats, and exhaust fans can be connected to the economizer controller. For information on how to mount the devices, see the device's installation instructions. See Fig. 75 and Table 26 for economizer controller wiring details.

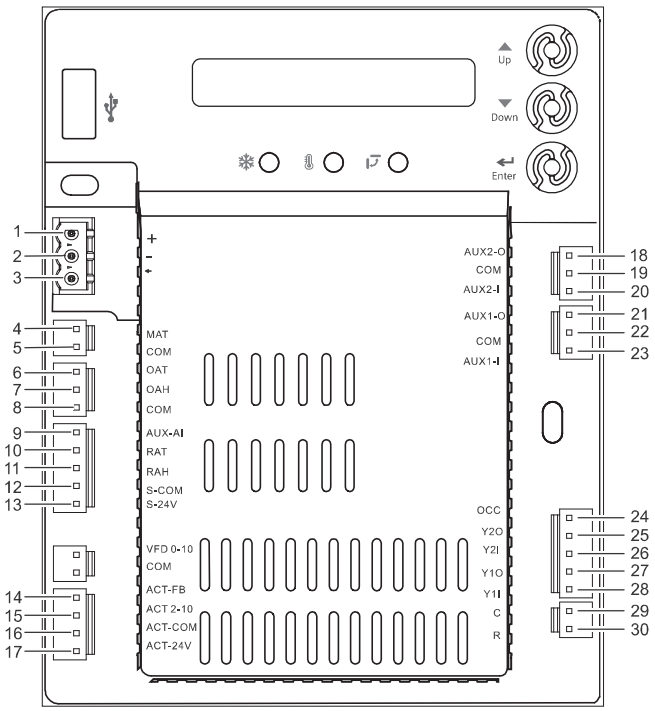

Fig. 75 — EconomizerONE Control Wiring

Table 26 — EconomizerONE Control Wiring Settings

NO.	LABEL	TYPE	DESCRIPTION
1	+	RS485 Modbus A	Line A
2	-	RS485 Modbus B	Line B
3	¬	GND_ISO	Earth Ground
4	MAT	Type II NTC 10K or 0-10 vdc	Mixed or Discharge Air Temperature Sensor
5	COM	COM	Mixed or Discharge Air Temperature Sensor Common
6	OAT	Type II NTC 10K or 0-10 vdc	Outside Air Temperature Sensor
7	OAH	0-10 vdc or 4-20mA	Outside Air Relative Humidity Sensor
8	COM	COM	Outside Air Temperature Sensor or Outside Air Relative Humidity Sensor Common
9	AUX-AI	0-10 vdc, 2-10 vdc or 0-5 vdc	Air Quality Sensor or Pressure Sensor
10	RAT	Type II NTC 10K or 0-10 vdc	Return Air Temperature Sensor
11	RAH	0-10 vdc or 4-20mA	Return Air Relative Humidity Sensor
12	S-COM	COM	24 vac Common
13	S-24V	24 vac	24 vac Power Out to Sensors
14	ACT-FB	2-10 vdc	Damper Actuator Feedback
15	ACT2-10	2-10 vdc	Damper Actuator Output
16	ACT-COM	COM	Damper Actuator Output Common
17	ACT-24V	24 vac	24 vac Power Out to Damper Actuator
18	AUX2-O	24 vac OUT	Configurable: • Exhaust Fan (1 or 2) • System Alarm output (Title 24)
19	COM	COM	24 vac Common
20	AUX2-I	24 vac IN	Configurable: • Shut Down • Heat Conventional (W1) • Heat Pump Changeover (reversing valve OB) • Pre-occupancy
21	AUX1-O	24 vac OUT	Configurable: • Exhaust Fan (1 or 2) • System Alarm output (Title 24)
22	COM	COM	24 vac Common
23	AUX1-I	24 vac IN	Configurable: • Shut Down • Heat Conventional (W1) • Heat Pump Changeover (reversing valve OB) • Pre-occupancy
24	OCC	24 vac IN	Occupancy Input
25	Y2O	24 vac OUT	Cooling Stage 2 Output to Stage 2 Mechanical Cooling
26	Y2I	24 vac IN	Cooling Stage 2 Input from Commercial Thermostat
27	Y1O	24 vac OUT	Cooling Stage 1 Output to Stage 1 Mechanical Cooling
28	Y1I	24 vac IN	Cooling Stage 1 Input from Commercial Thermostat
29	C	COM	24 vac Common
30	R	24 vac	24 vac Power

Connecting Peripheral Devices to the Economizer Controller

See Fig. 76-80 for wiring details.

- Outside Air: Connect to the OAT and COM terminals of the device.
- Return Air (Differential): Connect to the RAT and S-COM terminals of the device.
- Mixed Air: Connect to the MAT and COM terminals of the device.

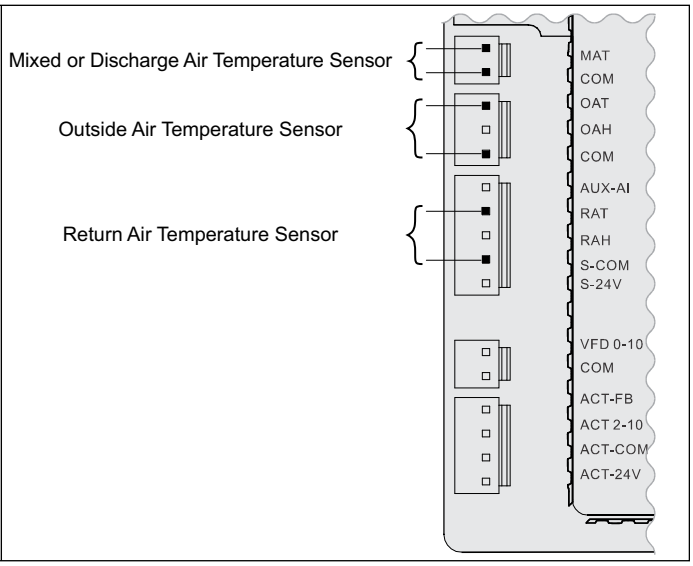

Fig. 76 — Temperature Sensor Connection

- Outside Air Relative Humidity: Connect to the OAH and COM terminals of the device.
- Return Air Relative Humidity: Connect to the RAH and S-COM terminals of the device.

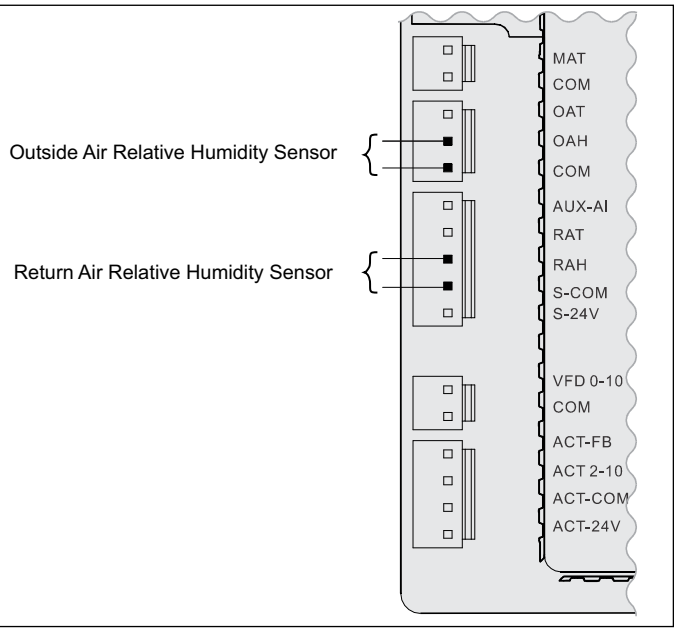

Fig. 77 — Relative Humidity Sensor Connection

- Outside Combination Temperature/ Humidity: Connect to the OAT, COM, and OAH terminals of the device.
- Return Combination Temperature/ Humidity: Connect to the RAT, S-COM, and RAH terminals of the device.

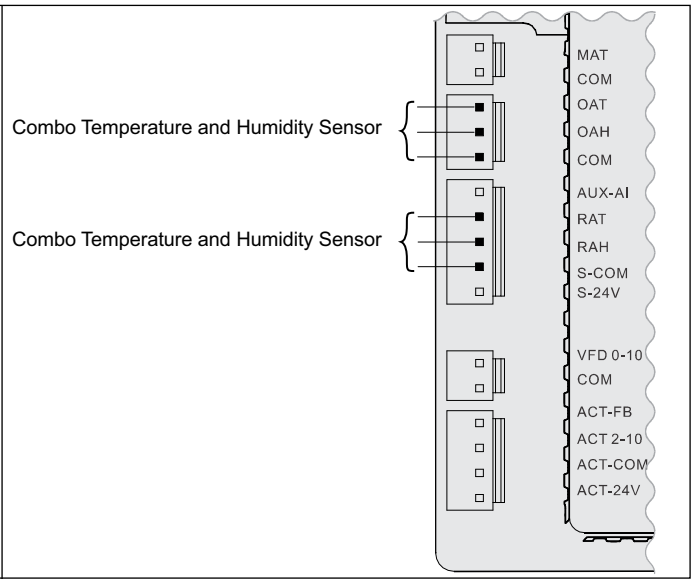

Fig. 78 — Combination Temperature/Humidity Sensor Connection

- Connect to the AUX-AI, S-COM, and S-24V terminals of the device.

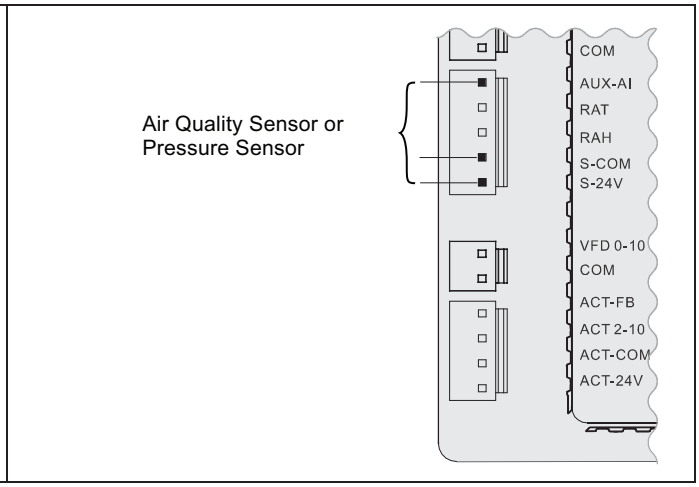

Fig. 79 — CO_2/Pressure Sensor Connection

- Connect to the ACT 2-10, ACT-COM, and ACT-24V terminals of the device.

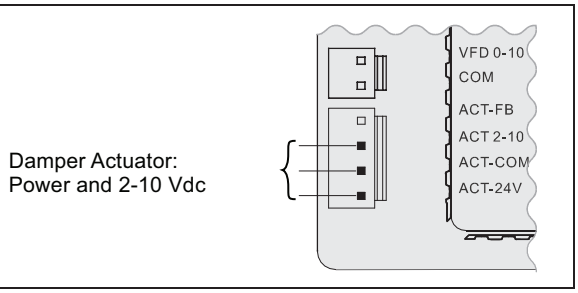

Fig. 80 — Damper Actuator Connection

SETUP AND CONFIGURATION

IMPORTANT: Before setup and configuration, it is recommended to obtain some location-based values, such as shutoff points, or utilize the location services in the Climatix™ mobile application.

Set up and configure the economizer controller before putting it into usage. This can be accomplished by using the Climatix™ mobile application or the inbuilt display. After sensor, compressor, thermostat, or actuator is connected to the economizer controller, values/statuses are displayed in the Operating section of the mobile application and on the LCD. Users can manually change basic and advanced settings, configure I/Os, and test the damper operation and any configured outputs by modifying the corresponding parameter values in the local device or mobile application. See Tables 27-34 for complete list of all parameters available on the LCD display. Refer to it during the setup and configuration process.

NOTE: For all units, the Climatix application login is: **Administrator**. For units coming from the factory with CO_2 configuration or single enthalpy (control mode 3), the controller password is OneBT2.1. For all other units, use the controller password OneBT.

NOTE: Parameters and display menus may display differently/dynamically if different applications are configured. See Tables 27-34.

IMPORTANT: Not all operations are available on the local POL224. For example, users can only obtain shutoff setpoints and perform cfm commissioning via the Climatix™ mobile application. Setup and configuration on the local device are only recommended if operations from the mobile application are unavailable. Check the mobile application for all operations that can be performed from the mobile application end.

IMPORTANT: By connecting the RS485 port to a PC, all parameters are also readable or writable from PC tools such as Modbus Poll.exe via Modbus®[a] and Yabe.exe via BACnet®[a] MSTP (Bps 38400 [default], Bps 9600, Bps 19200, Bps 115200). Note that an external End of Line (EOL) element is required to achieve Baud Rate 115200 at a maximum cable length of 4000 ft (1.2 km).

NOTE(S):

a. Third-party trademarks and logos are the property of their respective owners.

Table 27 — Status Display

PARAMETER	DESCRIPTION	VALUE
1FREECOOL	Indicates whether the system can use outdoor air for free cooling.	YES NO
1ECON ENAB	Indicates whether outdoor air is being used for the first stage of cooling.	
1OCCUPIED	Indicates whether the space is occupied. If users choose **ALWAYS** for **6OCC** when configuring I/Os, then the parameter value is **YES**; if users keep the default selection **T-STAT** for **6OCC** and the controller receives 24-v signal from OCC input, then the value is **YES**. Otherwise, the value is **NO**.	
1Y1-IN	Y1-In call from thermostat for Cooling Stage 1.	ON OFF
1Y1-OUT	Y1-Out signal to compressor for Cooling Stage 1.	
1Y2-IN	Y2-In call from thermostat for Cooling Stage 2.	
1Y2-OUT	Y2-Out signal to compressor for Cooling Stage 2. **Dynamic item:** Appears only if Y2-Out terminal is configured.	
1AUX1-I	Aux1-In signal **Dynamic item:** Appears only if Aux1-In terminal is configured.	
1AUX1-O	Aux1-Out signal **Dynamic item:** Appears only if Aux1-Out terminal is configured.	
1AUX2-I	Aux2-In signal **Dynamic item:** Appears only if Aux2-In terminal is configured.	
1AUX2-O	Aux2-Out signal **Dynamic item:** Appears only if Aux2-Out terminal is configured.	
1COMP STAGE	Indicates compressor current stage.	Off 1 2 3
1HEAT ENAB	Indicates whether heating is enabled.	YES NO
1MIX AIR LOW	Indicates whether the anti-freeze protection function is enabled for a mixed air temperature sensor. If the detected air temperature is lower than the anti-freeze protection setpoint (3FRZ PROT), then the parameter value is **YES**. Otherwise, it is **NO**.	
1MAT PRES	Indicates the present value of the mixed air temperature (MAT) sensor. **Dynamic item:** Appears only if **MAT** or **AUTO** is selected for **3DIF T LOC** under Parameter Settings — Advanced on page 61.	The corresponding detected value is displayed on the LCD.
1LAT PRES	Indicates the present value of the leaving air temperature (LAT) sensor. **Dynamic item:** Appears only if **LAT** or **AUTO** is selected for **3DIF T LOC**.	
1OAT PRES	Indicates the present value of the outdoor air temperature (OAT) sensor. **Dynamic item:** Appears only if an OAT sensor is configured.	
1OAH PRES	Indicates the present value of the outdoor air relative humidity (OAH) sensor. **Dynamic item:** Appears only if an OAH sensor is configured.	
1RAT PRES	Indicates the present value of the return air temperature (RAT) sensor. **Dynamic item:** Appears only if a RAT sensor is configured.	
1RAH PRES	Indicates the present value of the return air relative humidity (RAH) sensor. **Dynamic item:** Appears only if a RAH sensor is configured.	
1CO2 PRES	Indicates the present value of the CO_2 sensor. **Dynamic item:** Appears only if a CO_2 sensor is configured.	
1DCV STATUS	Indicates the demand controlled ventilation (DCV) status. **Dynamic item:** Appears only if a CO_2 sensor is configured. Displays ON if the measured CO_2 concentration value is above the DCV setpoint and OFF if below the DCV setpoint.	ON OFF
1FAN SPD LV	Indicates the current fan speed status (low, medium, or high). If a one-speed fan is connected and configured, then this item is invisible. **Dynamic item:** Appears only if "**6FAN**" is configured as "**2SPEED**" under Parameter Settings — I/O Configurations on page 61.	L H
1ACT OUT	Indicates current position of damper actuator in V.	The corresponding detected value is displayed on the LCD.
1ACT FB	Indicates feedback signal of damper actuator in V.	
1ACT POS	Indicates current position of damper actuator in % Open.	
1ACT CNT	Indicates number of times actuator has cycled (1 cycle = 180 degrees of movement in any direction). Resettable via HMI item **8ACT CNT RESET** under Enter Running State on page 63.	
1EQUIP	Indicates the equipment type. If **HP(O)** or **HP(B)** is chosen for **6AUX1-I**, then the parameter value is **HP(O)** or **HP(B)** respectively. If neither is chosen, then the value is **CON RTU**.	HP(O) HP(B) CON RTU
1OAT LOCK	Indicates status of the OAT cooling lockout function.	NO LCKOUT OVRD
1INS	Indicates the installation date of the economizer controller. If the installation date is incorrect, press Enter to change and confirm month, date, and year.	—

Table 28 — Parameter Settings — Basic

PARAMETER	DESCRIPTION	RANGE	DEFAULT
2 TEMP OFF	Temperature shutoff setpoint can be obtained automatically if a smartphone or tablet with the mobile application installed on it is connected to the network provided by a Wi-Fi/WLAN stick plugged into the economizer controller. This can also be a manually defined setpoint.	48...80°F; increment by 1	63°F
2ENTH OFF	Enthalpy shutoff setpoint can be obtained automatically if a smartphone or tablet with the mobile application installed on it is connected to the network provided by a Wi-Fi/WLAN stick plugged into the economizer controller. This can also be a manually defined setpoint. **Dynamic item:** Appears only if an OAH sensor is configured.	22...30 Btu/lbm; increment by 1	28 Btu/lbm
2DVC	Demand controlled ventilation setpoint can be obtained automatically if a smartphone or tablet with the mobile application installed on it is connected to the network provided by a Wi-Fi/WLAN stick plugged into the economizer controller. This can also be a manually defined setpoint. **Dynamic item:** Appears only if a CO_2 sensor is configured.	300...2000PPM; increment by 100	1100PPM
2FAN L ACT	Damper minimum position when fan runs at a low speed. **Dynamic item:** Appears only if "**6FAN**" is configured as "**2SPEED**" under Parameter Settings — I/O Configurations on page 61.	2...10V; increment by 0.1	3.6V
2FAN H ACT	Damper minimum position when fan runs at a high speed. **Dynamic item:** Appears only if "**6FAN**" is configured as "**1SPEED**" or "**2SPEED**".	2...10V; increment by 0.1	2.8V
2VENTMAX L	DCV maximum position when fan runs at a low speed. **Dynamic item:** Appears only if a CO_2 sensor is configured and "**6FAN**" is configured as "**2SPEED**".	2...10V; increment by 0.1	3.6V
2VENTMAX H	DCV maximum position when fan runs at a high speed. **Dynamic item:** Appears only if a CO_2 sensor is configured and "**6FAN**" is configured as "**1SPEED**" or "**2SPEED**".	2...10V; increment by 0.1	3.6V
2VENTMIN L	DCV minimum position when fan runs at a low speed. **Dynamic item:** Appears only if a CO_2 sensor is configured and "**6FAN**" is configured as "**2SPEED**".	2...10V; increment by 0.1	3.1V
2VENTMIN H	DCV minimum position when fan runs at a high speed. **Dynamic item:** Appears only if a CO_2 sensor is configured and "**6FAN**" is configured as "**1SPEED**" or "**2SPEED**".	2...10V; increment by 0.1	2.3V
CFM COMM	Air Flow Chart: **CFM commissioning** can only be initiated from the mobile application. When **CFM commissioning** is in progress, the local device reads "**CFM COMM**".	—	—
2DEGREES	Temperature unit (°F or °C).	—	°F
2FAN	Fan cfm.	100...50,000cfm; increment by 100	5000cfm
2EX1 L	Exhaust Fan 1 low-speed parameter setting. **Dynamic item:** Appears only if: • Exhaust Fan 1 is configured. • "**6FAN**" is configured as "**2SPEED**".	0...100%; increment by 1	65%
2EX1 H	Exhaust Fan 1 high-speed parameter setting. **Dynamic item:** Appears only if: • Exhaust Fan 1 is configured. • "**6FAN**" is configured as "**1SPEED**" or "**2SPEED**".	0...100%; increment by 1	50%
2EX2 L	Exhaust Fan 2 low-speed parameter setting. **Dynamic item:** Appears only if: • Exhaust Fan 2 is configured. • "**6FAN**" is configured as "**2SPEED**".	0...100%	80%
2EX2 H	Exhaust Fan 2 high-speed parameter setting. **Dynamic item:** Appears only if: • Exhaust Fan 2 is configured. • "**6FAN**" is configured as "**1SPEED**" or "**2SPEED**".	0...100%; increment by 1	75%
2THL	Temperature high limitation. **Dynamic item:** Appears only if an RAT sensor is configured.	0...100%; increment by 1	83%
2EHL	Enthalpy high limitation. **Dynamic item:** Appears only if an RAH sensor is configured.	30...50 Btu/lbm; increment by 1	33 Btu/lbm
2FAN DLY	Cooling delay via increasing fan speed.	0...30 min; increment by 1	5 min.

Table 29 — Parameter Settings — Advanced

PARAMETER	DESCRIPTION	VALUE/RANGE	DEFAULT
3FREEZE POS	Anti-freeze protection damper position (closed or minimum).	CLO MIN	CLO
3SD ACT POS	Damper position during shutdown (open or closed).	CLO OPN	CLO
3DIF T LOC	MAT sensor location: • Choose **MAT** if the sensor is installed before the DX (Direct Expansion) coil. • Choose **LAT** if the sensor is installed after the DX coil. • Choose **AUTO** to let the economizer controller automatically detect the location.	MAT LAT AUTO	LAT
3LAT LOW	Low limit of leaving air temperature. **Dynamic item:** Appears only if **LAT** or **AUTO** is selected for **3DIF T LOC**.	35...65°F; increment by 1	45°F
3LAT HIGH	High limit of leaving air temperature. **Dynamic item:** Appears only if **LAT** or **AUTO** is selected for **3DIF T LOC**.	70...180°F; increment by 1	80°F
3OAT CAL	OAT sensor calibration.	–2.5...2.5°F; increment by 0.5	0°F
3RAT CAL	RAT sensor calibration. **Dynamic item:** Appears only if an RAT sensor is configured.	–2.5...2.5°F; increment by 0.5	—
3OAH CAL	OAH sensor calibration. **Dynamic item:** Appears only if an OAH sensor is configured.	–10...10%; increment by 0.5	0%
3RAH CAL	RAH sensor calibration. **Dynamic item:** Appears only if an RAH sensor is configured.		
3MAT CAL	MAT or LAT sensor calibration.	–2.5...2.5°F; increment by 0.5	0°F
3MAT SET	Setpoint of MAT or LAT sensor.	38...70°F; increment by 1	53°F
3FRZ PROT	Anti-freeze protection setpoint of MAT sensor.	35...55°F; increment by 1	45°F
3ACT TOLR	Actuator tolerance setpoint between output (in percent) and feedback (in percent).	0...15%; increment by 1	8%
3OAT LOCK	OAT lockout set point for anti-freeze protection.	–45...80°F; increment by 1	32°F
3OAT LCKOVRD	When OAT LOCKOUT is enabled, choose to override the cooling lockout function or not.	YES NO	NO
3OAT LOCKODLY	Indicates the overridden time if "**YES**" is selected for "**3OAT LCKOVRD**".	0...300 min; increment by 1	45 min.

Table 30 — Parameter Settings — I/O Configurations

PARAMETER	DESCRIPTION	VALUE	DEFAULT
6OCC	Configures whether occupancy status receives signal from the connected thermostat or is displayed as ALWAYS in the economizer controller.	T-STAT ALWAYS	T-STAT
6AUX1-I	Auxiliary DI-1. Configurable as: • None • Heat Conventional (W1) from thermostat • Heat pump (reversing valve O) • Heat pump (reversing valve B) • Pre-occupancy signal from thermostat • Shutdown signal from unit	NONE HP(O) HP(B) PREOCC SHUTDWN	W1
6AUX2-I	Auxiliary DI-2. Configurable as: • None • Heat stage 1 (W1) from thermostat • Heat pump (reversing valve O) • Heat pump (reversing valve B) • Pre-occupancy signal from thermostat • Shutdown signal from unit **NOTE:** Whichever is chosen for 6AUX1-I does not appear in the list of 6AUX2-I.	NONE W1 HP(O) HP(B) PREOCC SHUTDWN	NONE
6OAT SIG	Configures signal type of OAT sensor.	0-10V NTC10K	NTC10K
6RAT SIG	Configures signal type of RAT sensor.	0-10V NTC10K NONE	NONE
6OAH SIG	Configures signal type of OAH sensor.	0-10V 4-20mA NONE	NONE
6RAH SIG	Configures signal type of RAH sensor.		
6MAT SIG	Configures signal type of MAT or LAT sensor.	0-10V NTC10K	NTC10K
6AUX-AI1	Auxiliary AI-1. Configurable as: • CO_2 sensor • Static pressure (temporarily for cfm commissioning) sensor • None	PRESSURE CO2 NONE	NONE
6X-AI1 SIG	Configures CO_2 sensor type. **Dynamic item**: Appears only if "**CO2**" is selected for "**6AUX-AI1**".	0-10V 2-10V 0-5V	0-10V
6CO2 Rng L	Configures the low limit of CO_2 measuring range. **Dynamic item**: Appears only if "**CO2**" is selected for "**6AUX-AI1**".	0...500; increment by 10	0
6C02 Rng H	Configures the high limit of CO_2 measuring range. **Dynamic item**: Appears only if "**CO2**" is selected for "**6AUX-AI1**".	1000...3000; increment by 50	2000
6AUX-AI2	Choose **ACT FB** if feedback signal is available from the connected damper actuator. Otherwise, choose **NONE**.	ACT FB NONE	ACT FB

Table 30 — Parameter Settings — I/O Configurations (cont)

PARAMETER	DESCRIPTION	VALUE	DEFAULT
6Y2O	Choose "**COOL 2**" if Cooling Stage 2 is available (another compressor is connected to the Economizer). Otherwise, choose "**NONE**".	COOL 2 NONE	COOL 2
6AUX1-O	Auxiliary DO-1. Configurable as: • None. • Exhaust fan (1 or 2). • Alarm output to thermostat (Title 24).	NONE ALARM EXHAUST	EXHAUST
6AUX2-O	Auxiliary DO-2. Configurable as: • None. • Exhaust fan (1 or 2). • Alarm output to thermostat (Title 24). **NOTE:** Except for Exhaust Fan, whichever is chosen for 6AUX1-O does not appear in the list of 6AUX2-O.	NONE ALARM EXHAUST	ALARM
6RS485	Switch between MSTP and Modbus.	MSTP MODBUSSLV	MSTP

Table 31 — Alarm Parameters[a,b]

PARAMETER	DESCRIPTION
NO ALARM	No alarm is activated.
4MAT SEN ALARM	MAT sensor has failed, gone out of range, or become disconnected.
4CO2 SEN ALARM	CO_2 sensor has failed, gone out of range, or become disconnected.
4OAT SEN ALARM	OAT sensor has failed, gone out of range, or become disconnected.
4OAH SEN ALARM	OAH sensor has failed, gone out of range, or become disconnected.
4RAT SEN ALARM	RAT sensor has failed, gone out of range, or become disconnected.
4RAH SEN ALARM	RAH sensor has failed, gone out of range, or become disconnected.
4FREEZE ALARM	Anti-freeze notification when MAT sensor is below anti-freeze protection setpoint.
4RTU SHUTDOWN	Notification of Shutdown Active when SHUTDWN is chosen for 6AUX1-I or 6AUX2-I.
4ACTUATOR ALARM	Actuator gets disconnected or has failed.
4ACT UNDER V	Voltage received by the actuator is below expected range.
4ACT OVER V	Voltage received by the actuator is above expected range.
4ACT STALLED	Damper actuator stopped before achieving commanded position.
4ACT SLIPPING	Damper actuator slips after reaching commanded position.
4NOT ECON	Not economizing when it should.
4ECON SHOULDNT	Economizing when it should not.
4EXCESS OA	Excess outdoor air. Outside air intake is significantly higher than it should be.
4LLA ALARM	Leaving air temperature is lower than the low limit (3LAT LOW).
4HLA ALARM	Leaving air temperature is higher than the high limit (3LAT HIGH).

NOTE(S):

a. All alarms are dynamic items. An alarm appears only if a related symptom mentioned above is detected.
b. An alarm activation triggers a general alarm and then the configured system alarm output (AUX1-O or AUX2-O) is activated. If there is no alarm, then NO ALARM is displayed on the HMI.

Table 32 — Test Commands

PARAMETER	DESCRIPTION
7DAMPER MIN POS	Press Enter to test whether the economizer controller can drive damper to minimum position.
7DAMPER CLOSE	Press Enter to test whether the economizer controller can drive damper to 100% Closed.
7DAMPER OPEN	Press Enter to test whether the economizer controller can drive damper to 100% Open.
7DAMPER ALL	Press Enter to perform all the above tests.
7DAMPER	Press Enter to test whether the economizer controller can drive damper to the selected voltage.
7Y1O	Press Enter to test whether the economizer controller can turn on or off the first stage of cooling (close or open relay Y1O).
7Y2O	Press Enter to test whether the economizer controller can turn on or off the second stage of cooling (close or open relay Y2O).
7AUX1-O	Press Enter to test AUX1-O connection (close or open relay AUX1-O).
7AUX2-O	Press Enter to test AUX2-O connection (close or open relay AUX2-O).

Table 33 — Enter Running State

PARAMETER	DESCRIPTION
8RUN STATE	Change to Running State. Press Enter to confirm the change.
8ENTER RUN?	Confirm the change to Running State.
8FACTORY DEF	Perform factory reset. Press Enter to confirm the reset. (This action resets the controller password to default: OneBT.)
8DEF CONFIRM?	Confirm the factory resetting.
8ACT CNT RESET	Damper count reset.
8VER x.x.x	Firmware version information such as 0.1.10.

Table 34 — Enter Configuration State and Restart

PARAMETER	DESCRIPTION
5CONFIG STATE	Change to Configuration State. Press Enter to confirm the change.
5ENTER CONFIG?	Confirm the change to Configuration State.
5RESTART	Restart the economizer controller. Press Enter to confirm the restart.
5CONF RESTART	Confirm the restart.

INSTALLING OPTIONAL HH57LW001 SINGLE OUTSIDE AIR ENTHALPY SENSOR

When using the HH57LW001 enthalpy sensor (see Fig. 81) for outside air changeover, the existing HH79NZ039 dry bulb sensor (see Fig. 82) must be removed. The enthalpy sensor will be mounted in the same location as the dry bulb sensor (see Fig. 83). When the enthalpy sensor's OA (Outside Air) temperature, enthalpy, and dew point are below their respective setpoints, the outside air can be used for free cooling. When any of these are above the setpoint, free cooling will not be available. Enthalpy setpoints are configurable and create an enthalpy boundary according to the user's input. For additional details, see Fig. 84-85 and Table 35.

Harness 48TC005213 is required to be connected between the EconomizerONE harness in the return air chamber. Harness 48TC005213 has a 5-pin plug that connects directly to the HH57LW001 enthalpy sensor. The CRENTSEN001A00 accessory kit includes enthalpy sensor (HH57LW001) and associated 5-pin plug (48TC005213) and may be ordered as a finished good.

Enthalpy Control Sensor Configuration

The optional enthalpy control sensor (P/N: HH57LW001) communicates with the POL224 economizer controller using the 5-wire harness, 48TC005213. The HH57LW001 sensor can be used as a single outside air enthalpy, a differential return enthalpy, or a differential return temperature sensor. Refer to the base unit control wiring diagrams found earlier in this book to wire the HH57LW001 enthalpy sensor for each option. Use Fig. 81 and Table 37 on page 66 to locate the wiring terminals for each enthalpy control sensor.

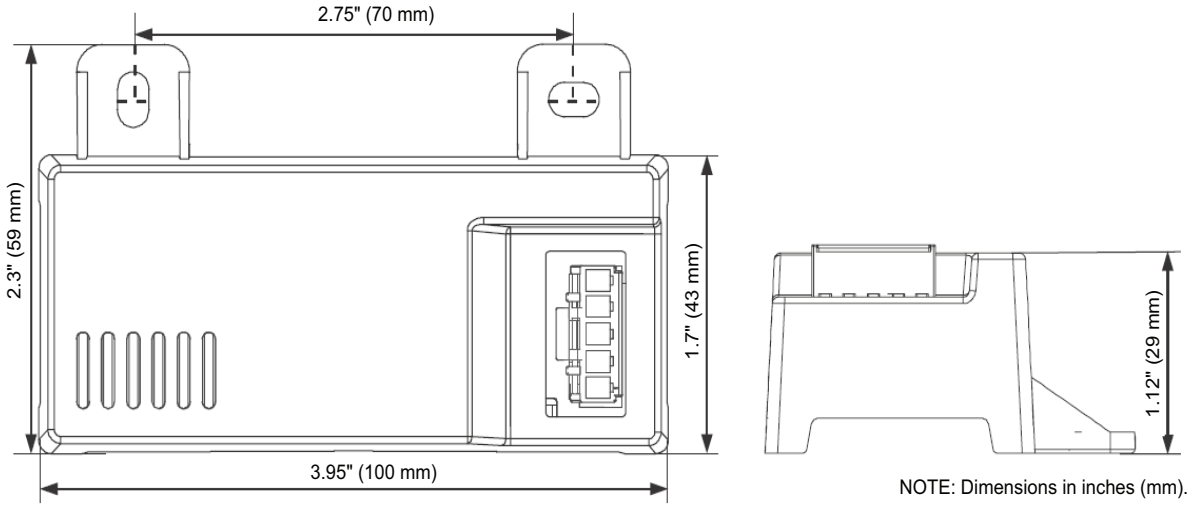

Fig. 81 — HH57LW001 Dimensional, Connection and Switching Information

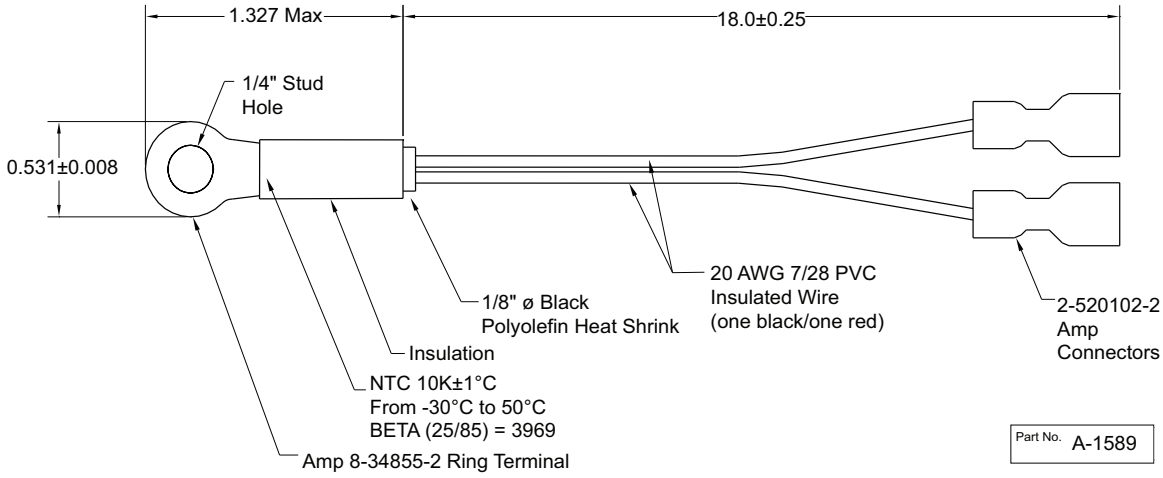

Fig. 82 — HH79NZ039 Dry Bulb and Mixed Air Sensor Wiring

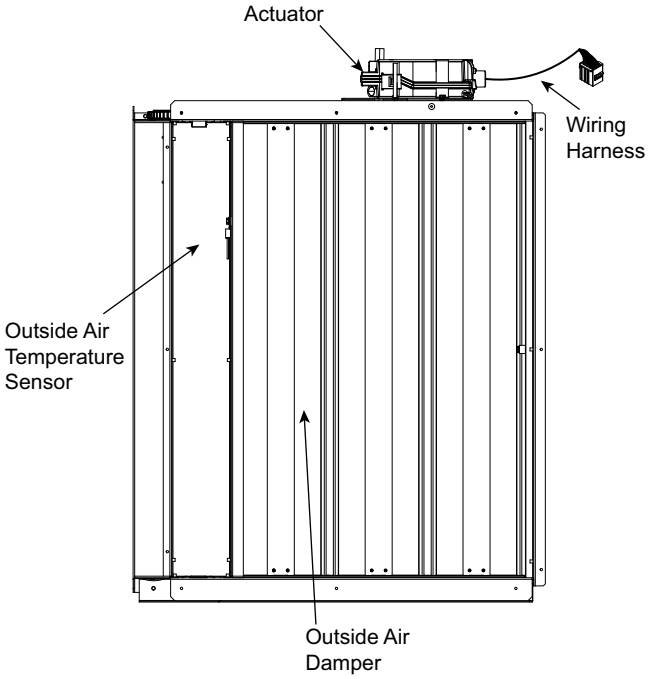

Fig. 83 — EconomizerONE Component Locations (CRECOMZR108A00 Shown)

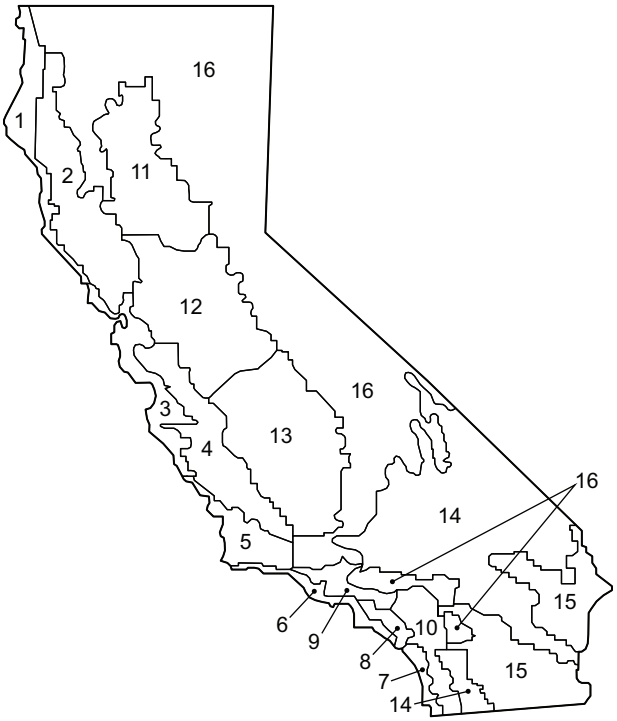

Fig. 84 — California Title 24 Zones

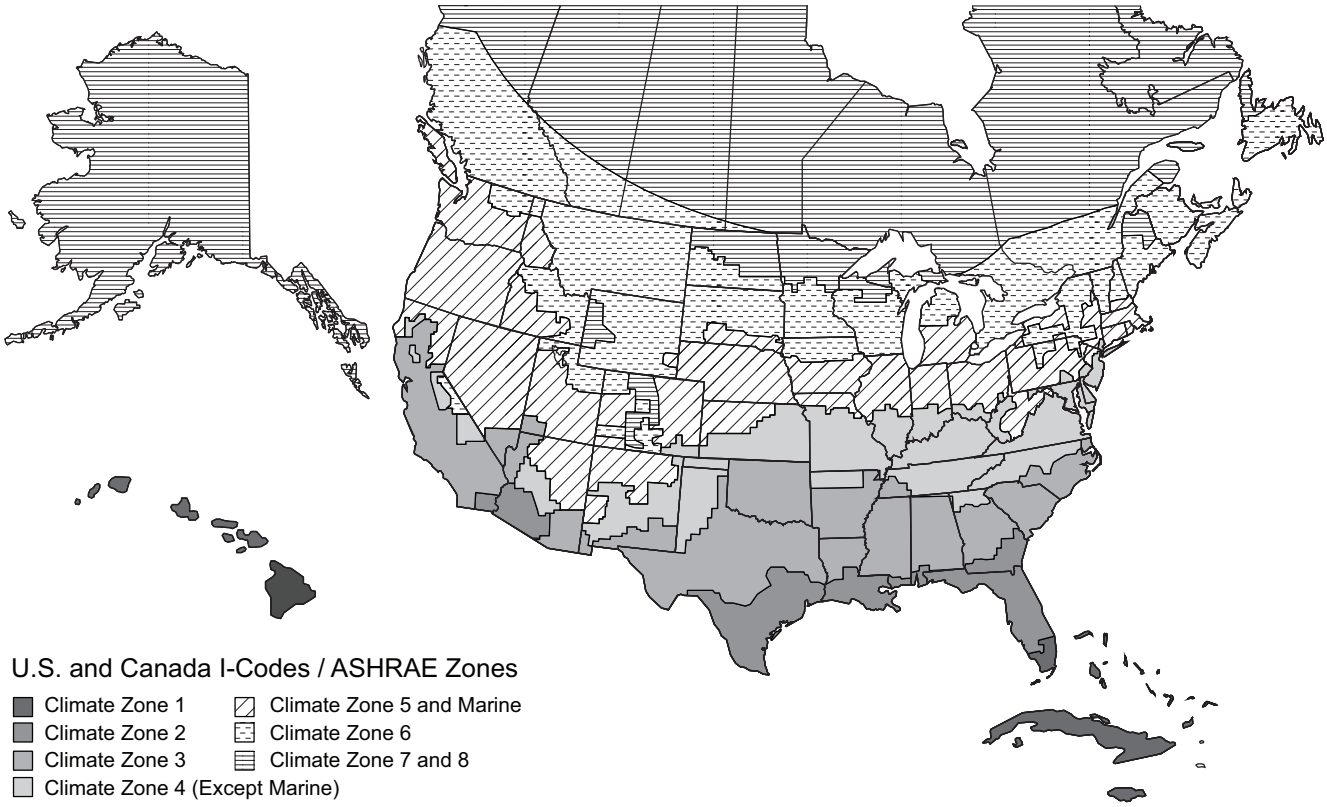

Fig. 85 — U.S. and Canada Climate Zones

Table 35 — Enthalpy Manual Entry Setpoints for EconomizerONE Per Climate Zone

CLIMATE ZONES[a]	2 TEMP OFF	LOWEST SETTING	RH%	2 ENTH OFF	RH%	2THL	2EHL	RH%
1	65°F	22 Btu/lbm	43%	28 Btu/lbm	86%	83°F	33 Btu/lbm	48%
2	65°F	22 Btu/lbm	43%	28 Btu/lbm	86%	83°F	33 Btu/lbm	48%
3	65°F	22 Btu/lbm	43%	28 Btu/lbm	86%	83°F	33 Btu/lbm	48%
4	65°F	22 Btu/lbm	43%	28 Btu/lbm	86%	83°F	33 Btu/lbm	48%
5	70°F	22 Btu/lbm	28%	28 Btu/lbm	65%	83°F	33 Btu/lbm	48%
6	70°F	22 Btu/lbm	28%	28 Btu/lbm	65%	83°F	33 Btu/lbm	48%
7 and 8	75°F	22 Btu/lbm	19%	28 Btu/lbm	50%	83°F	33 Btu/lbm	48%
CALIFORNIA TITLE 24 ZONES[b]	**2 TEMP OFF**	**LOWEST SETTING**	**RH%**	**2 ENTH OFF**	**RH%**	**2THL**	**2EHL**	**RH%**
1	75°F	22 Btu/lbm	19%	28 Btu/lbm	50%	83°F	33 Btu/lbm	48%
2	73°F	22 Btu/lbm	22%	28 Btu/lbm	55%	83°F	33 Btu/lbm	48%
3	75°F	22 Btu/lbm	19%	28 Btu/lbm	55%	83°F	33 Btu/lbm	48%
4	73°F	22 Btu/lbm	22%	28 Btu/lbm	55%	83°F	33 Btu/lbm	48%
5	75°F	22 Btu/lbm	19%	28 Btu/lbm	50%	83°F	33 Btu/lbm	48%
6	71°F	22 Btu/lbm	28%	28 Btu/lbm	62%	83°F	33 Btu/lbm	48%
7	69°F	22 Btu/lbm	32%	28 Btu/lbm	68%	83°F	33 Btu/lbm	48%
8	71°F	22 Btu/lbm	28%	28 Btu/lbm	62%	83°F	33 Btu/lbm	48%
9	71°F	22 Btu/lbm	28%	28 Btu/lbm	62%	83°F	33 Btu/lbm	48%
10	73°F	22 Btu/lbm	22%	28 Btu/lbm	55%	83°F	33 Btu/lbm	48%
11	75°F	22 Btu/lbm	19%	28 Btu/lbm	50%	83°F	33 Btu/lbm	48%
12	75°F	22 Btu/lbm	19%	28 Btu/lbm	50%	83°F	33 Btu/lbm	48%
13	75°F	22 Btu/lbm	19%	28 Btu/lbm	50%	83°F	33 Btu/lbm	48%
14	75°F	22 Btu/lbm	19%	28 Btu/lbm	50%	83°F	33 Btu/lbm	48%
15	75°F	22 Btu/lbm	19%	28 Btu/lbm	50%	83°F	33 Btu/lbm	48%
16	75°F	22 Btu/lbm	19%	28 Btu/lbm	50%	83°F	33 Btu/lbm	48%
CONTROLLER DEFAULT SETTINGS	**2 TEMP OFF**	**—**	**—**	**2 ENTH OFF**	**—**	**2THL**	**2EHL**	**RH%**
DEFAULT SET POINTS	63°F	—	—	28 Btu/lbm	94%	83°F	33 Btu/lbm	48%

NOTE(S):

a. See Fig. 85 for map of U.S. and Canada climate zones.
b. See Fig. 84 for map of California Title 24 zones.

Economizers are shipped standard with an HH79NZ039 outside air dry bulb sensor (see Fig. 82). System default setting (high temp limit) is 63°F (17°C) and has a range of 48°F to 80°F (9°C to 27°C). Sensor is factory installed on economizer.

NOTE: A second HH79NZ039 sensor is provided for mixed air temperature.

NOTE: California high temperature setting requirements by region are shown in Table 36.

Enthalpy Settings (Enthalpy Option)

If installing the optional HH57LW001 enthalpy sensor, the HH79NZ039 dry bulb outside air sensor must first be removed. Wire sensor to harness 48TC005213 and the (5) wires from the harness to the EconomizerONE harness in the return air chamber. Harness 48TC005213 has a 5-pin plug that connects directly to the HH57LW001 enthalpy sensor. Refer to the base unit control wiring diagrams earlier in this book for wiring connections. Refer to Fig. 81 and Table 37.

California's Title 24 High Temperature Limit Settings

California's Title 24 code requires a high temperature limit setting for all dry bulb outside air economizer changeover. The temperatures vary by the region within California. See Table 36 for high limit settings.

Table 36 — California Title 24 Regional High Limit Dry Bulb Temperature Settings[a]

DEVICE TYPE[b]	CLIMATE ZONES	REQUIRED HIGH LIMIT (ECONOMIZER OFF WHEN): DESCRIPTION
FIXED DRY BULB	1, 3, 5, 11-16	OAT exceeds 75°F (23.8°C)
	2, 4, 10	OAT exceeds 73°F (22.7°C)
	6, 8, 9	OAT exceeds 71°F (21.6°C)
	7	OAT exceeds 69°F (20.5°C)
DIFFERENTIAL DRY BULB	1, 3, 5, 11-16	OAT exceeds RA temperature
	2, 4, 10	OAT exceeds return air temperature –2°F (–18.8°C)
	6, 8, 9	OAT exceeds return air temperature –4°F (–20°C)
	7	OAT exceeds return air temperature –6°F (–21.1°C)
FIXED ENTHALPY[c] + FIXED DRY BULB	All	OAT exceeds 28 Btu/lb of dry air[b] or OAT exceeds 75°F (23.8°C)

NOTE(S):

a. This table sourced from 2019 California Energy Code, Title 24, Part 6, Table 140.4-E Air Economizer High Limit Shut Off Control Requirements.
b. Only the high limit control devices listed are allowed to be used and at the set points listed. Others such as Dew Point, Fixed Enthalpy, Electronic Enthalpy, and Differential Enthalpy Controls, may not be used in any climate zone for compliance with Section 140.4(e)1 unless approval for use is provided by the Energy Commission Executive Director.
c. At altitudes substantially different than sea level, the Fixed Enthalpy limit value shall be set to the enthalpy value at 75°F and 50% relative humidity. As an example, at approximately 6,000 foot elevation, the fixed enthalpy limit is approximately 30.7 Btu/lb.

LEGEND

OAT — Outdoor-air Thermostat
RA — Return Air

Table 37 — HH57LW001 Sensor Wiring Terminations

TERMINAL NUMBER	TERMINAL LABEL	TYPE	DESCRIPTION
1	TCOM	NTC 10k	Outside Air Temperature Sensor Output
2	TSIG	NTC 10k	Outside Air Temperature Sensor Output
3	HSIG	0-10 vdc	Outside Air Relative Humidity Sensor Output
4	HCOM	COMMON	Sensor 24-v Common Input
5	H24V	24 vac	Sensor 24-v Operating Voltage Input

CHECKOUT

Inspect all wiring connections at the economizer module's terminals, and verify compliance with the installation wiring diagrams. For checkout, review the Status of each configured parameter and perform the Test Commands tests (refer to Table 32).

For information about menu navigation and use of the keypad see Interface Overview on page 48.

⚠ WARNING

ELECTRIC SHOCK HAZARD

Failure to follow this warning could result in personal injury, property damage, or death.

Before performing service or maintenance operations on unit, always turn off main power switch to unit and install lock(s) and lockout tag(s). Unit may have more than one power switch. Ensure electrical service to rooftop unit agrees with voltage and amperage listed on the unit rating plate.

If any wiring changes are required, first be sure to remove power from the economizer module before starting work. Pay particular attention to verifying the power connection (24 vac).

Power Up

After the POL224 module is mounted and wired, apply power.

Initial Menu Display

On initial start up, "Welcome" displays on the economizer HMI screen. After a brief pause, the Parameter Settings — I/O Configuration (refer to Table 30) of the software appears, allowing the user to check that presets and default values are configured correctly.

Power Loss (Outage or Brownout)

All set points and advanced settings are restored after any power loss or interruption.

NOTE: All settings are stored in non-volatile flash memory.

Status

Use the Status menu (refer to Table 27) to check the parameter values for the various devices and sensors configured.

NOTE: For information about menu navigation and use of the keypad, see Interface Overview on page 48.

Checkout Tests

Use the Test Commands menu (refer to Table 32) to test the damper operation and any configured outputs. Only items that are configured are shown in the Test Commands menu.

NOTE: For information about menu navigation and use of the keypad, see Interface Overview on page 48.

To perform a Test Command test:

1. Scroll to the desired test in Test Command menu 7 using the Up and Down buttons.
2. Press the Enter button to select the item. RUN? appears.
3. Press the Enter button to start the test. The unit pauses and then displays IN PROGRESS. When the test is complete, DONE appears.
4. When all desired parameters have been tested, press Enter + Up to end the test.

The Checkout tests can all be performed at the time of installation or at any time during the operation of the system as a test that the system is operable.

⚠ CAUTION

EQUIPMENT DAMAGE HAZARD

Failure to follow this caution may result in equipment damage.

Be sure to allow enough time for compressor start-up and shutdown between checkout tests so that you do not short-cycle the compressors.

TROUBLESHOOTING

For EconomizerONE troubleshooting issues see Table 38.

Table 38 — Operating Issues and Concerns

SYMPTOM	REASON	SOLUTION
An alarm is displayed on the LCD	Sensor, damper, or the whole working system may not work properly	Check sensor, damper, or the whole working system following the detailed alarm information.
DAC LED is blinking RED	Damper slippage	Check whether the damper works properly.
DAC LED is blinking RED quickly	Damper unplugged	Check whether the damper is connected.
DAC LED is OFF	Terminal ACT-FB is configured but there is no available feedback signal	Check whether the feedback signal is connected; check if ACT-FB is faulty.
Economizer controller has no alarm, but the Free Cooling LED will not turn on when the OA seems to be suitable for Free Cooling	Shutoff SP setting error	Shutoff temperature and/or enthalpy set point is incorrectly set up. Consult an HVAC professional to set up the shutoff set point correctly.
	OA temp is too low	The OA temperature is too low; therefore, there is no cooling demand. This could possibly enable anti-freeze protection.
	OA temp is too high or too humid	In DIFF mode, even though OA temperature is lower than RA temperature, if both OA and RA temperatures exceed the high limit, then Free Cooling turns off. In Differential Enthalpy control mode, even though OA enthalpy is lower than RA enthalpy, if both OA and RA enthalpy exceed the high limit, then Free Cooling turns off.
Economizer controller/mechanical cooling is not operating	No input power	Use a multi-meter to check whether there is 24 vac ± 25% (18-30 vac) at the POWER terminals. If there is no voltage or if the voltage is significantly low, then check the transformer output voltage at the RTU. If 24-v is not present at the transformer secondary side, then check the primary line voltage to the transformer. If the line voltage is not present at the transformer primary side, then check the primary power to the RTU, fuses, circuit breaker, and so on.
	Brownout	If voltage is below 17-v, then the economizer controller may be in Brownout Protection mode. This mode disables all of the relay outputs. When the power is 19 vac or higher, the economizer controller and RTU operate normally.
	Y1/Y2 signal is missing from the thermostat	Mechanical cooling does not run until there is cooling demand (Y1/Y2 Active). Check the wiring from Y1I and Y2I terminals to the commercial thermostat. 24-v should be present between Y1I/Y2I and Y1O/Y2O respectively.
	24 vac~ and 24 vac ⊥ are incorrectly wired	24 vac power supply has polarity when all devices are powered by the same 24 vac transformer; reversing polarity may cause a short circuit that can damage the system. Follow the transformer polarity mark, check the wiring of 24-v~ (or G or 24-v+), and ensure that they are tied to the same polar of 24 vac power supply; while checking the wiring of ⊥ (or G0 or 24-v- or COM), ensure that they are all tied to another polar of 24 vac power supply.
Firmware update failure	Application file is damaged, operation is incorrect, and/or USB flash disk does not work properly	Reload a BIN file, restart the controller, update firmware[a], or change a USB flash disk. Contact service provider if failure still exists.
Free Cooling LED is solid RED	Sensor, damper, or whole working system may not work properly	Check sensor, damper, or the whole working system following the detailed alarm information.
Free Cooling LED is blinking RED	Not economizing when it should	Check the whole economizer working system, such as the sensor, damper, and thermostat.
Incorrect controller password error on mobile application	For CO_2 and single enthalpy (control mode 3) configurations from the factory, the password has changed	For units coming from the factory with CO_2 configuration or single enthalpy (control mode 3), use the controller password OneBT2.1. For all other units, use the controller password OneBT. Performing a factory reset on the controller will also reset the password to OneBT.
RS485 communication failure	RS485 signal or configuration error	Check wiring, configuration, Baud Rate (using mobile application), and other network communication parameters.
Sensor LED is blinking RED	Excess outdoor air	Check the whole economizer working system, such as the sensor, damper, and thermostat.
Sensor LED is solid RED	Mixed Air (MA) sensor error	Check the MA sensor. It must be either a Type II NTC 10K or 0-10 vdc sensor.
	Outside Air (OA)/Return Air (RA) sensor error	Check the wiring and signal of the OA sensor. If in Differential (DIFF) mode, also check the RA sensor. The following sensor signals are valid: Type II NTC 10K or 0-10 vdc temperature. 0-10 vdc or 4-20 mA humidity.
	Air temperature failure/fault	Check the air temperature sensor signal. The valid signal must be Type II NTC 10K or 0-10 vdc.
Sensor LED is OFF	CO_2 sensor error	Check CO_2 sensor connection, sensor signal (under range or over range), and sensor signal type.
Sensor LED is YELLOW	Humidity sensor error	Check humidity sensor connection, sensor signal (under range or over range), and sensor signal type.
Wi-Fi connection failure	Wi-Fi/WLAN stick error or wrong user name and password	Unplug and re-plug in the Wi-Fi/WLAN stick, enter a correct user name and password, restart the controller, or replace the Wi-Fi/WLAN stick. If the Wi-Fi/WLAN stick is POL903.00/100, then the default user name and password are Siemens-WLAN-Stick and SIBPAdmin. DNS name is siemens.wlanstick. Contact Application Engineering for information on this accessory.

NOTE(S):

a. Back up configurations before firmware update. All the previous configuration data is erased after firmware update. Contact Application Engineering for more information on support for firmware.
IMPORTANT: If the controller enters the configuration state for the convenience of I/O configurations, then users can manually switch to the running state after finishing configurations. To do so, press Enter + Up at the same time, then press Enter to confirm the switch after 8RUN STATE appears on the LCD.

PRE-START-UP/START-UP

⚠ WARNING

PERSONAL INJURY HAZARD

Failure to follow this warning could result in personal injury or death.

1. Follow recognized safety practices and wear approved Personal Protective Equipment (PPE), including safety glasses and gloves when checking or servicing refrigerant system.
2. Do not use a torch to remove any component. System contains oil and refrigerant under pressure. To remove a component, wear PPE and proceed as follows:
   a. Shut off all electrical power to unit. Apply applicable lockout/tag-out procedures.
   b. Recover refrigerant to relieve all pressure from system using both high-pressure and low pressure ports.
   c. Do not use a torch. Cut component connection tubing with tubing cutter and remove component from unit.
   d. Carefully un-sweat remaining tubing stubs when necessary. Oil can ignite when exposed to torch flame.
3. Do not operate compressor or provide any electric power to unit unless compressor terminal cover is in place and secured.
4. Do not remove compressor terminal cover until all electrical power is disconnected and approved lockout/tag-out procedures are in place.
5. Relieve all pressure from system before touching or disturbing anything inside terminal box whenever refrigerant leak is suspected around compressor terminals.
6. Never attempt to repair a soldered connection while refrigerant system is under pressure.

⚠ WARNING

ELECTRICAL OPERATION HAZARD

Failure to follow this warning could result in personal injury or death.

The unit must be electrically grounded in accordance with local codes and NEC ANSI/NFPA 70 (American National Standards Institute/National Fire Protection Association).

Proceed as follows to inspect and prepare the unit for initial start-up:

1. Remove all access panels.
2. Read and follow instructions on all WARNING, CAUTION, and INFORMATION labels attached to, or shipped with, unit.
3. Make the following inspections:
   a. Inspect for shipping and handling damages such as broken lines, loose parts, or disconnected wires, etc.
   b. Inspect for oil at all refrigerant tubing connections and on unit base. Detecting oil generally indicates a refrigerant leak. Leak-test all refrigerant tubing connections using electronic leak detector, halide torch, or liquid-soap solution.
   c. Inspect all field-wiring and factory-wiring connections. Be sure that connections are completed and tight. Be sure that wires are not in contact with refrigerant tubing or sharp edges.
   d. Inspect coil fins. If damaged during shipping and handling, carefully straighten fins with a fin comb.
4. Verify the following conditions:
   a. Make sure that condenser-fan blade are correctly positioned in fan orifice. See Condenser Fan Adjustment section for more details.
   b. Make sure that air filter(s) is in place.
   c. Make sure that condensate drain trap is filled with water to ensure proper drainage.
   d. Make sure that all tools and miscellaneous loose parts have been removed.

START-UP, GENERAL

Unit Preparation

Make sure that unit has been installed in accordance with installation instructions and applicable codes.

In addition to the base unit start-up (unit with electro-mechanical control), there are a few steps needed to properly start-up units with optional direct digital controls (DDC). The DDC's Service Test function should be used to assist in the base unit start-up and also allows verification of output operation. Controller configuration is also part of start-up. This is especially important when field accessories have been added to the unit. The factory preconfigures options installed at the factory. There may also be additional installation steps or inspection required during the start-up process.

Additional Installation/Inspection

Inspect the field-installed accessories for proper installation, making note of which ones do or do not require configuration changes. Inspect the DDC Alarms for initial insight to any potential issues. Refer to the Controls, Start-up, Operation and Troubleshooting Instructions manual for the specific DDC. Inspect the SAT sensor for relocation as intended during installation. Inspect special wiring as directed below.

Return-Air Filters

Ensure correct filters are installed in unit. (See "PHYSICAL DATA" on page 66.). Do not operate unit without return-air filters.

Outdoor-Air Inlet Screens

Outdoor-air inlet screen must be in place before operating unit.

Compressor Mounting

Compressors are internally spring mounted. Do not loosen or remove compressor hold down bolts.

Internal Wiring

Check all electrical connections in unit control boxes. Tighten as required.

Refrigerant Service Ports

Each unit system has two 1/4 in. SAE flare (with check valves) service ports: one on the suction line, and one on the compressor discharge line. Be sure that caps on the ports are tight.

Compressor Rotation

⚠ CAUTION

EQUIPMENT DAMAGE HAZARD

Failure to follow this caution can result in premature wear and damage to equipment.

Scroll compressors can only compress refrigerant if rotating in the right direction. Reverse rotation for extended times can result in internal damage to the compressor. Scroll compressors are sealed units and cannot be repaired on site location.

On 3-phase units with scroll compressors, it is important to be certain compressor is rotating in the proper direction. To determine whether or not compressor is rotating in the proper direction:

1. Connect service gauges to suction and discharge pressure fittings.
2. Energize the compressor.
3. The suction pressure should drop and the discharge pressure should rise, as is normal on any start-up.

If the suction pressure does not drop and the discharge pressure does not rise to normal levels:

1. Note that the evaporator fan is probably also rotating in the wrong direction.
2. Turn off power to the unit and install lockout tag.
3. Reverse any 2 of the unit power leads.
4. Re-energize to the compressor. Check pressures.

The suction and discharge pressure levels should now move to their normal start-up levels.

NOTE: When the compressor is rotating in the wrong direction, the unit will make an elevated level of noise and will not provide cooling.

Refrigerant Service Ports

Each system has two 1/4 in. SAE flare (with check valves) service ports: one on the suction line, and one on the compressor discharge line. Be sure that caps on the ports are tight.

Cooling

Set space thermostat to OFF position. To start unit, turn on main power supply. Set system selector switch at COOL position and fan switch at AUTO. position. Adjust thermostat to a setting below room temperature. Compressor starts on closure of contactor.

Check unit charge. Refer to Refrigerant Charge section on page 16.

Reset thermostat at a position above room temperature. Compressor will shut off. Evaporator fan will shut off after a 30-second delay.

To shut off unit, set system selector switch at OFF position. Resetting thermostat at a position above room temperature shuts unit off temporarily until space temperature exceeds thermostat setting.

Heating

To start unit, turn on main power supply. Set system selector switch to the HEAT position and set thermostat at a setting above room temperature. Set fan to AUTO position.

First stage of thermostat energizes the first stage of the electric heaters. Second stage of thermostat energizes the second stage of electric heaters (if installed). Check heating effects at air supply grille(s).

If electric heaters do not energize, reset limit switch (located on supply-fan scroll) by pressing button located between terminals on the switch.

To shut unit off, set system selector switch to the OFF position. Resetting thermostat at a position below room temperature temporarily shuts unit off until space temperature falls below thermostat setting.

Ventilation (Continuous Fan)

Set fan and system selector switches at ON and OFF positions, respectively. Evaporator fan operates continuously to provide constant air circulation.

FASTENER TORQUE VALUES

Heat shield screws	30 in.-lb (3.4 Nm) ±2 in.-lb (0.2 Nm)
Stator motor mounting screws	23 in.-lb (2.6 Nm) ±2 in.-lb (0.2 Nm)
Fan rotor mounting screws	23 in.-lb (2.6 Nm) ±2 in.-lb (0.2 Nm)
Limit switch screws	50 in.-lb (5.7 Nm) ±5 in.-lb (0.6 Nm)
Fan deck bracket screws	50 in.-lb (5.7 Nm) ±5 in.-lb (0.6 Nm)
Condenser fan motor mounting screws	30 in.-lb (3.4 Nm) ±3 in.-lb (0.3 Nm)
Condenser fan hub set screw	60 in.-lb (6.8 Nm) ±5 in.-lb (0.6 Nm)
Compressor mounting bolts	65 in.-lb (7.3 Nm) +10 in.-lb (1.2 Nm)

START-UP, SYSTEMVU CONTROLS

IMPORTANT: SET-UP INSTRUCTIONS

Installation, wiring and troubleshooting information for the SystemVu™ Controller: *50FEQ 04-30, 50GEQ 04-28, 48QE 04-28 Single Package Rooftop Units with SystemVu™ Controls Version X.X and Puron Advance™ (R-454B) Refrigerant, Controls, Start-Up, Operation and Troubleshooting* manual. Have a copy of this manual available at unit start-up.

APPENDIX A — MODEL NUMBER NOMENCLATURE

Position:	1	2	3	4	5	6	7	8	9	10	11	12	13	14	15	16	17	18
Example:	5	0	F	E	Q	A	0	4	A	2	A	6	-	0	A	0	A	0

Unit Type
50 – Cooling with Electric Heat

Model Series
FE – Entry Tier Puron® Advance Rooftop

Heat Size
Q = Heat Pump

Refrig. Systems Options
A = One Stage Cooling (04-06)
M = Two Stage Cooling, Single Circuit (07)

Cooling Tons
04 = 3 tons
05 = 4 tons
06 = 5 tons
07 = 6 tons

Sensor Options
A = None
B = Return Air Smoke Detector (RA)
C = Supply Air Smoke Detector (SA)
D = RA + SA Smoke Detector
J = Condensate Overflow Switch (COFS)
K = Condensate Overflow Switch + RA Smoke Detector
L = Condensate Overflow Switch + RA and SA Smoke Detectors
M = Condensate Overflow Switch + SA Smoke Detector

Fan Options
2 = Standard/Medium Static – EcoBlue Vane Axial Fan
3 = High Static – EcoBlue Vane Axial Fan
5 = Standard/Medium Static – EcoBlue Vane Axial Fan and Filter Status Switch
6 = High Static – EcoBlue Vane Axial Fan and Filter Status Switch

RTPF Coil Options – (Outdoor - Indoor — Hail Guard)
A = Al/Cu - Al/Cu
B = Precoat Al/Cu - Al/Cu
C = E-coat Al/Cu - Al/Cu
D = E-coat Al/Cu - E-coat Al/Cu
M = Al/Cu - Al/Cu — Louvered Hail Guard
N = Precoat Al/Cu - Al/Cu — Louvered Hail Guard
P = E-coat Al/Cu - Al/Cu — Louvered Hail Guard
Q = E-coat Al/Cu - E-coat Al/Cu — Louvered Hail Guard
R = Cu/Cu - Al/Cu — Louvered Hail Guard
S = Cu/Cu - Cu/Cu — Louvered Hail Guard

Voltage
1 = 575-3-60
3 = 208/230-1-60[a, b]
5 = 208/230-3-60
6 = 460-3-60

Packaging
0 = Standard

Electrical Options
A = None
C = Non-Fused Disconnect (NFDC)
D = Thru-the-Base Connections (TTB)
F = NFDC + TTB
N = Phase Monitor Protection (PMR)
Q = PMR + NFDC
R = PMR + TTB
T = PMR + NFDC + TTB
1 = HSCCR[c] (High Short Circuit Current Rating)
2 = HSCCR[c] + TTB

Service Options
0 = None
1 = Unpowered Convenience Outlet (NPCO)
2 = Powered Convenience Outlet (PCO)
3 = Hinged Panels (HP)
4 = Hinged Panels + NPCO
5 = Hinged Panels + PCO
6 = 4-Inch MERV-13 Filters (M13)
7 = NPCO + MERV-13 Filters
8 = PCO + MERV-13 Filters
9 = Hinged Panels + MERV-13 Filters
A = HP + NPCO + MERV-13 Filters
B = HP + PCO + MERV-13 Filters

Intake / Exhaust Options
A = None
B = Standard Leak Economizer with Barometric Relief
F = Standard Leak Enthalpy Economizer with Barometric Relief
L = ULL (Ultra Low Leak) Temperature Economizer with Barometric Relief and CO_2 Sensor
M = ULL Enthalpy Economizer with Barometric Relief and CO_2 Sensor
U = ULL Temperature Economizer with Barometric Relief
W = ULL Enthalpy Economizer with Barometric Relief

Base Unit Controls
0 = Standard Electromechanical Controls (can be used with field installed economizers and dampers)
3 = SystemVu™ Controller
8 = Electro-mechanical Controls with POL224 (includes FDD[d])

Design Revision
- = Factory Design Revision

NOTE(S):
[a] Not available for size 07 units
[b] On single phase models (-3 Voltage code), the following are not available as factory installed options:
Louvered Hail Guards, Coated or Copper Fin Coils, Powered Convenience Outlet, Economizer, Upgraded MERV filters
[c] Not available on the following models/options:
575-v, Phase Loss Monitor, Non-Fused Disconnect, Powered Convenience Outlet.
[d] Fault Detection and Diagnostic

Fig. A — Model Number Nomenclature

APPENDIX B — PHYSICAL DATA

50FEQ Physical Data

50FEQ UNIT	50FEQA04	50FEQA05	50FEQA06	50FEQM07
NOMINAL TONS	3	4	5	6
BASE UNIT OPERATING WT (lb)[a]	467	473	584	589
REFRIGERATION SYSTEM				
No. Circuits/No. Compressors/Type	1 / 1/ Scroll	1 / 1/ Scroll	1 / 1 / Scroll	1 / 1 / 2-Stage Scroll
Puron Advance™ (R-454B) Charge (lb-oz)	8-3	10-3	11-3	12-13
Metering Device	Acutrol	Acutrol	Acutrol	TXV
High-Pressure Trip/Reset (psig)	630/505	630/505	630/505	630/505
Low-Pressure Trip/Reset (psig)	54/117	54/117	54/117	54/117
EVAPORATOR COIL (Indoor)				
Material (Tube/Fin)	Cu/Al	Cu/Al	Cu/Al	Cu/Al
Coil Type	3/8 in. RTPF	3/8 in. RTPF	3/8 in. RTPF	3/8 in. RTPF
Rows/FPI	3/15	3/15	4/15	4/15
Total Face Area (ft^2)	5.5	5.5	7.3	7.3
Condensate Drain Connection Size	3/4 in.	3/4 in.	3/4 in.	3/4 in.
CONDENSER COIL (Outdoor)				
Material	Cu/Al	Cu/Al	Cu/Al	Cu/Al
Coil Type	5/16 in. RTPF	5/16 in. RTPF	5/16 in. RTPF	5/16 in. RTPF
Rows/FPI	2/18	2/18	2/18	2/18
Total Face Area (ft^2)	14.6	15.9	20.5	20.5
EVAPORATOR FAN AND MOTOR (Indoor)				
Medium Static 1 Phase				
Motor Qty/Drive Type	1/Direct	1/Direct	1/Direct	—
Max Cont Bhp	0.71	1.06	1.44	—
Rpm Range	219-2190	217-2170	239-2390	—
Fan Qty/Type	1/Vane Axial	1/Vane Axial	1/Vane Axial	—
Fan Diameter (in.)	16.6	16.6	16.6	—
High Static 1 Phase				
Motor Qty/Drive Type	1/Direct	1/Direct	1/Direct	—
Max Cont Bhp	1.07	1.53	1.96	—
Rpm Range	249-2490	246-2460	266-2660	—
Fan Qty/Type	1/Vane Axial	1/Vane Axial	1/Vane Axial	—
Fan Diameter (in.)	16.6	16.6	16.6	—
Medium Static 3 Phase				
Motor Qty/Drive Type	1/Direct	1/Direct	1/Direct	1/Direct
Max Cont Bhp	0.71	1.06	1.44	1.76
Rpm Range	219-2190	217-2170	239-2390	253-2530
Fan Qty/Type	1/Vane Axial	1/Vane Axial	1/Vane Axial	1/Vane Axial
Fan Diameter (in.)	16.6	16.6	16.6	16.6
High Static 3 Phase				
Motor Qty/Drive Type	1/Direct	1/Direct	1/Direct	1/Direct
Max Cont Bhp	1.07	1.96	2.43	2.43
Rpm Range	249-2490	266-2660	284-2836	284-2836
Fan Qty/Type	1/Vane Axial	1/Vane Axial	1/Vane Axial	1/Vane Axial
Fan Diameter (in.)	16.6	16.6	16.6	16.6
CONDENSER FAN AND MOTOR (Outdoor)				
Qty / Motor Drive Type	1 / Direct	1 / Direct	1 / Direct	1 / Direct
Motor Hp/Rpm	1/4 / 1100	1/4 / 1100	1/4 / 1100	1/4 / 1100
Fan Diameter (in.)	23	23	23	23
FILTERS				
RA Filter Qty / Size (in.)	2 / 16x25x2	2 / 16x25x2	4 / 16x16x2	4 / 16x16x2
OA Inlet Screen Qty / Size (in.)	1 / 20x24x1	1 / 20x24x1	1 / 20x24x1	1 / 20x24x1

NOTE(S):

a. Base unit operating weight does not include weight of options.

APPENDIX C — FAN PERFORMANCE

GENERAL FAN PERFORMANCE NOTES

1. Interpolation is permissible. Do not extrapolate.
2. External static pressure is the static pressure difference between the return duct and the supply duct plus the static pressure caused by any FIOPs or accessories.
3. Tabular data accounts for pressure loss due to clean filters, unit casing, and wet coils.
4. Factory options and accessories may effect static pressure losses. Selection software is available, through your salesperson, to help you select the best motor/drive combination for your application.
5. The fan performance tables offer motor/drive recommendations. In cases when 2 motor/drive combinations would work, Carrier recommends the lower horsepower option.
6. For information on the electrical properties of Carrier motors, please see the Electrical Data section of the product data book for this model and size.
7. For more information on the performance limits of Carrier motors, see the application data section of the product data book for this model and size.
8. The EPACT (Energy Policy Act of 1992) regulates energy requirements for specific types of indoor fan motors. Motors regulated by EPACT include any general purpose, T-frame (3-digit, 143 and larger), single-speed, foot mounted, polyphase, squirrel cage induction motors of NEMA (National Electrical Manufacturers Association) design A and B, manufactured for use in the United States. Ranging from 1 to 200 hp, these continuous-duty motors operate on 230 and 460 volt, 60 Hz power. If a motor does not fit into these specifications, the motor does not have to be replaced by an EPACT compliant energy-efficient motor. Variable-speed motors are exempt from EPACT compliance requirements.

50FEQA04 Single Phase — 3 Ton Vertical Supply (rpm - bhp)

CFM	AVAILABLE EXTERNAL STATIC PRESSURE (in. wg)									
	0.2		0.4		0.6		0.8		1.0	
	rpm	bhp	rpm	bhp	rpm	bhp	rpm	bhp	rpm	bhp
900	1060	0.08	1325	0.16	1541	0.25	1718	0.35	1871	0.46
975	1103	0.09	1355	0.17	1572	0.27	1752	0.37	1906	0.48
1050	1150	0.11	1387	0.19	1602	0.29	1784	0.40	1941	0.51
1125	1198	0.12	1422	0.20	1632	0.30	1815	0.42	1974	0.54
1200	1249	0.14	1459	0.22	1662	0.32	1845	0.44	2005	0.56
1275	1303	0.15	1499	0.23	1694	0.34	1874	0.46	2036	0.59
1350	1357	0.17	1542	0.26	1728	0.36	1905	0.48	2066	0.61
1425	1413	0.20	1587	0.28	1765	0.38	1936	0.51	2095	0.64
1500	1469	0.22	1635	0.30	1803	0.41	1969	0.53	2126	0.67

CFM	AVAILABLE EXTERNAL STATIC PRESSURE (in. wg)									
	1.2		1.4		1.6		1.8		2.0	
	rpm	bhp	rpm	bhp	rpm	bhp	rpm	bhp	rpm	bhp
900	2006	0.56	2130	0.67	2244	0.79	2352	0.91	2453	1.03
975	2044	0.59	2168	0.71	2283	0.83	2391	0.95	—	—
1050	2080	0.63	2206	0.75	2322	0.87	2430	1.00	—	—
1125	2115	0.66	2242	0.78	2359	0.91	2468	1.05	—	—
1200	2148	0.69	2277	0.82	2396	0.96	—	—	—	—
1275	2180	0.72	2311	0.86	2431	1.00	—	—	—	—
1350	2211	0.75	2343	0.90	2465	1.04	—	—	—	—
1425	2241	0.78	2375	0.93	—	—	—	—	—	—
1500	2271	0.82	2405	0.97	—	—	—	—	—	—

Standard/Medium Static 1060-2190 rpm, 0.71 max bhp

High Static 1060-2490 rpm, 1.07 max bhp

50FEQA04 Single Phase — Standard/Medium Static — 3 Ton Vertical Supply (rpm - vdc)

CFM	AVAILABLE EXTERNAL STATIC PRESSURE (in. wg)									
	0.2		0.4		0.6		0.8		1.0	
	rpm	vdc	rpm	vdc	rpm	vdc	rpm	vdc	rpm	vdc
900	1060	4.8	1325	6.1	1541	7.0	1718	7.8	1871	8.5
975	1103	5.0	1355	6.2	1572	7.2	1752	8.0	1906	8.7
1050	1150	5.3	1387	6.3	1602	7.3	1784	8.1	1941	8.9
1125	1198	5.5	1422	6.5	1632	7.5	1815	8.3	1974	9.0
1200	1249	5.7	1459	6.7	1662	7.6	1845	8.4	2005	9.2
1275	1303	5.9	1499	6.8	1694	7.7	1874	8.6	2036	9.3
1350	1357	6.2	1542	7.0	1728	7.9	1905	8.7	2066	9.4
1425	1413	6.5	1587	7.2	1765	8.1	1936	8.8	2095	9.6
1500	1469	6.7	1635	7.5	1803	8.2	1969	9.0	2126	9.7

CFM	AVAILABLE EXTERNAL STATIC PRESSURE (in. wg)									
	1.2		1.4		1.6		1.8		2.0	
	rpm	vdc	rpm	vdc	rpm	vdc	rpm	vdc	rpm	vdc
900	2006	9.2	2130	9.7	—	—	—	—	—	—
975	2044	9.3	2168	9.9	—	—	—	—	—	—
1050	2080	9.5	—	—	—	—	—	—	—	—
1125	2115	9.7	—	—	—	—	—	—	—	—
1200	2148	9.8	—	—	—	—	—	—	—	—
1275	2180	10.0	—	—	—	—	—	—	—	—
1350	—	—	—	—	—	—	—	—	—	—
1425	—	—	—	—	—	—	—	—	—	—
1500	—	—	—	—	—	—	—	—	—	—

Standard/Medium Static 1060-2190 rpm

50FEQA04 Single Phase — High Static — 3 Ton Vertical Supply (rpm - vdc)

CFM	AVAILABLE EXTERNAL STATIC PRESSURE (in. wg)									
	0.2		0.4		0.6		0.8		1.0	
	rpm	vdc	rpm	vdc	rpm	vdc	rpm	vdc	rpm	vdc
900	1060	4.3	1325	5.3	1541	6.2	1718	6.9	1871	7.5
975	1103	4.4	1355	5.4	1572	6.3	1752	7.0	1906	7.7
1050	1150	4.6	1387	5.6	1602	6.4	1784	7.2	1941	7.8
1125	1198	4.8	1422	5.7	1632	6.6	1815	7.3	1974	7.9
1200	1249	5.0	1459	5.9	1662	6.7	1845	7.4	2005	8.1
1275	1303	5.2	1499	6.0	1694	6.8	1874	7.5	2036	8.2
1350	1357	5.4	1542	6.2	1728	6.9	1905	7.7	2066	8.3
1425	1413	5.7	1587	6.4	1765	7.1	1936	7.8	2095	8.4
1500	1469	5.9	1635	6.6	1803	7.2	1969	7.9	2126	8.5

CFM	AVAILABLE EXTERNAL STATIC PRESSURE (in. wg)									
	1.2		1.4		1.6		1.8		2.0	
	rpm	vdc	rpm	vdc	rpm	vdc	rpm	vdc	rpm	vdc
900	2006	8.1	2130	8.6	2244	9.0	2352	9.4	2453	9.9
975	2044	8.2	2168	8.7	2283	9.2	2391	9.6	—	—
1050	2080	8.4	2206	8.9	2322	9.3	2430	9.8	—	—
1125	2115	8.5	2242	9.0	2359	9.5	2468	9.9	—	—
1200	2148	8.6	2277	9.1	2396	9.6	—	—	—	—
1275	2180	8.8	2311	9.3	2431	9.8	—	—	—	—
1350	2211	8.9	2343	9.4	2465	9.9	—	—	—	—
1425	2241	9.0	2375	9.5	—	—	—	—	—	—
1500	2271	9.1	2405	9.7	—	—	—	—	—	—

High Static 1060-2490 rpm

50FEQA04 Three Phase — 3 Ton Vertical Supply (rpm - bhp)

CFM	AVAILABLE EXTERNAL STATIC PRESSURE (in. wg)									
	0.2		0.4		0.6		0.8		1.0	
	rpm	bhp	rpm	bhp	rpm	bhp	rpm	bhp	rpm	bhp
900	1060	0.08	1325	0.16	1541	0.25	1718	0.35	1871	0.46
975	1103	0.09	1355	0.17	1572	0.27	1752	0.37	1906	0.48
1050	1150	0.11	1387	0.19	1602	0.29	1784	0.40	1941	0.51
1125	1198	0.12	1422	0.20	1632	0.30	1815	0.42	1974	0.54
1200	1249	0.14	1460	0.22	1662	0.32	1845	0.44	2005	0.56
1275	1303	0.15	1499	0.23	1694	0.34	1874	0.46	2036	0.59
1350	1357	0.17	1542	0.26	1728	0.36	1905	0.48	2066	0.61
1425	1413	0.20	1587	0.28	1765	0.38	1936	0.51	2095	0.64
1500	1469	0.22	1635	0.30	1803	0.41	1969	0.53	2126	0.67

CFM	AVAILABLE EXTERNAL STATIC PRESSURE (in. wg)									
	1.2		1.4		1.6		1.8		2.0	
	rpm	bhp	rpm	bhp	rpm	bhp	rpm	bhp	rpm	bhp
900	2006	0.56	2130	0.67	2245	0.79	2352	0.91	2454	1.03
975	2044	0.59	2169	0.71	2284	0.83	2391	0.95	—	—
1050	2080	0.63	2206	0.75	2322	0.87	2430	1.00	—	—
1125	2115	0.66	2242	0.78	2360	0.92	2469	1.05	—	—
1200	2148	0.69	2277	0.82	2396	0.96	—	—	—	—
1275	2180	0.72	2311	0.86	2431	1.00	—	—	—	—
1350	2211	0.75	2343	0.90	2465	1.04	—	—	—	—
1425	2241	0.78	2375	0.93	—	—	—	—	—	—
1500	2271	0.82	2405	0.97	—	—	—	—	—	—

Standard/Medium Static 1060-2190 rpm, 0.71 max bhp

High Static 1060-2490 rpm, 1.07 max bhp

Table 1 — 50FEQA04 Three Phase — Standard/Medium Static — 3 Ton Vertical Supply (rpm - vdc)

CFM	AVAILABLE EXTERNAL STATIC PRESSURE (in. wg)									
	0.2		0.4		0.6		0.8		1.0	
	rpm	vdc	rpm	vdc	rpm	vdc	rpm	vdc	rpm	vdc
900	1060	4.8	1325	6.1	1541	7.0	1718	7.8	1871	8.5
975	1103	5.0	1355	6.2	1572	7.2	1752	8.0	1906	8.7
1050	1150	5.3	1387	6.3	1602	7.3	1784	8.1	1941	8.9
1125	1198	5.5	1422	6.5	1632	7.5	1815	8.3	1974	9.0
1200	1249	5.7	1460	6.7	1662	7.6	1845	8.4	2005	9.2
1275	1303	5.9	1499	6.8	1694	7.7	1874	8.6	2036	9.3
1350	1357	6.2	1542	7.0	1728	7.9	1905	8.7	2066	9.4
1425	1413	6.5	1587	7.2	1765	8.1	1936	8.8	2095	9.6
1500	1469	6.7	1635	7.5	1803	8.2	1969	9.0	2126	9.7

CFM	AVAILABLE EXTERNAL STATIC PRESSURE (in. wg)									
	1.2		1.4		1.6		1.8		2.0	
	rpm	vdc	rpm	vdc	rpm	vdc	rpm	vdc	rpm	vdc
900	2006	9.2	2130	9.7	—	—	—	—	—	—
975	2044	9.3	2169	9.9	—	—	—	—	—	—
1050	2080	9.5	—	—	—	—	—	—	—	—
1125	2115	9.7	—	—	—	—	—	—	—	—
1200	2148	9.8	—	—	—	—	—	—	—	—
1275	2180	10.0	—	—	—	—	—	—	—	—
1350	—	—	—	—	—	—	—	—	—	—
1425	—	—	—	—	—	—	—	—	—	—
1500	—	—	—	—	—	—	—	—	—	—

Standard/Medium Static 1060-2190 rpm

50FEQA04 Three Phase — High Static — 3 Ton Vertical Supply (rpm - vdc)

CFM	AVAILABLE EXTERNAL STATIC PRESSURE (in. wg)									
	0.2		0.4		0.6		0.8		1.0	
	rpm	vdc	rpm	vdc	rpm	vdc	rpm	vdc	rpm	vdc
900	1060	4.3	1325	5.3	1541	6.2	1718	6.9	1871	7.5
975	1103	4.4	1355	5.4	1572	6.3	1752	7.0	1906	7.7
1050	1150	4.6	1387	5.6	1602	6.4	1784	7.2	1941	7.8
1125	1198	4.8	1422	5.7	1632	6.6	1815	7.3	1974	7.9
1200	1249	5.0	1460	5.9	1662	6.7	1845	7.4	2005	8.1
1275	1303	5.2	1499	6.0	1694	6.8	1874	7.5	2036	8.2
1350	1357	5.4	1542	6.2	1728	6.9	1905	7.7	2066	8.3
1425	1413	5.7	1587	6.4	1765	7.1	1936	7.8	2095	8.4
1500	1469	5.9	1635	6.6	1803	7.2	1969	7.9	2126	8.5

CFM	AVAILABLE EXTERNAL STATIC PRESSURE (in. wg)									
	1.2		1.4		1.6		1.8		2.0	
	rpm	vdc	rpm	vdc	rpm	vdc	rpm	vdc	rpm	vdc
900	2006	8.1	2130	8.6	2245	9.0	2352	9.4	2454	9.9
975	2044	8.2	2169	8.7	2284	9.2	2391	9.6	—	—
1050	2080	8.4	2206	8.9	2322	9.3	2430	9.8	—	—
1125	2115	8.5	2242	9.0	2360	9.5	2469	9.9	—	—
1200	2148	8.6	2277	9.1	2396	9.6	—	—	—	—
1275	2180	8.8	2311	9.3	2431	9.8	—	—	—	—
1350	2211	8.9	2343	9.4	2465	9.9	—	—	—	—
1425	2241	9.0	2375	9.5	—	—	—	—	—	—
1500	2271	9.1	2405	9.7	—	—	—	—	—	—

High Static 1060-2490 rpm

50FEQA05 Single Phase — 4 Ton Vertical Supply (rpm - bhp)

CFM	AVAILABLE EXTERNAL STATIC PRESSURE (in. wg)									
	0.2		0.4		0.6		0.8		1.0	
	rpm	bhp	rpm	bhp	rpm	bhp	rpm	bhp	rpm	bhp
1200	1095	0.14	1302	0.24	1484	0.35	1646	0.48	1794	0.63
1300	1151	0.16	1347	0.26	1523	0.38	1681	0.51	1826	0.66
1400	1209	0.19	1395	0.29	1565	0.41	1719	0.55	1860	0.69
1500	1269	0.22	1444	0.32	1608	0.45	1758	0.58	1897	0.73
1600	1331	0.25	1496	0.36	1654	0.48	1800	0.62	1935	0.78
1700	1396	0.29	1550	0.40	1701	0.53	1843	0.67	1975	0.82
1800	1462	0.33	1605	0.44	1750	0.57	1888	0.72	2017	0.87
1900	1528	0.38	1663	0.49	1801	0.62	1934	0.77	2060	0.93
2000	1596	0.43	1722	0.54	1854	0.68	1982	0.83	2105	0.99

CFM	AVAILABLE EXTERNAL STATIC PRESSURE (in. wg)									
	1.2		1.4		1.6		1.8		2.0	
	rpm	bhp	rpm	bhp	rpm	bhp	rpm	bhp	rpm	bhp
1200	1931	0.78	2058	0.95	2177	1.12	2288	1.30	2394	1.49
1300	1961	0.82	2086	0.98	2205	1.16	2316	1.34	2422	1.54
1400	1993	0.85	2116	1.02	2233	1.20	2344	1.39	2450	1.58
1500	2026	0.89	2148	1.06	2264	1.25	2373	1.44	—	—
1600	2062	0.94	2181	1.11	2296	1.30	2404	1.49	—	—
1700	2099	0.99	2217	1.16	2328	1.35	2435	1.54	—	—
1800	2138	1.04	2254	1.22	2363	1.41	—	—	—	—
1900	2179	1.10	2292	1.28	2400	1.47	—	—	—	—
2000	2221	1.16	2332	1.34	2438	1.54	—	—	—	—

Standard/Medium Static 1095-2170 rpm, 1.06 max bhp

High Static 1095-2460 rpm, 1.53 max bhp

50FEQA05 Single Phase — Standard/Medium Static — 4 Ton Vertical Supply (rpm - vdc)

CFM	AVAILABLE EXTERNAL STATIC PRESSURE (in. wg)									
	0.2		0.4		0.6		0.8		1.0	
	rpm	vdc	rpm	vdc	rpm	vdc	rpm	vdc	rpm	vdc
1200	1094	5.0	1302	6.0	1484	6.8	1646	7.6	1794	8.3
1300	1150	5.3	1347	6.2	1523	7.0	1681	7.7	1826	8.4
1400	1209	5.6	1395	6.4	1565	7.2	1719	7.9	1860	8.6
1500	1269	5.8	1444	6.7	1608	7.4	1758	8.1	1897	8.7
1600	1332	6.1	1496	6.9	1654	7.6	1800	8.3	1935	8.9
1700	1396	6.4	1549	7.1	1701	7.8	1843	8.5	1975	9.1
1800	1461	6.7	1605	7.4	1750	8.1	1888	8.7	2017	9.3
1900	1528	7.0	1662	7.7	1801	8.3	1934	8.9	2060	9.5
2000	1596	7.4	1721	7.9	1853	8.5	1982	9.1	2105	9.7

CFM	AVAILABLE EXTERNAL STATIC PRESSURE (in. wg)									
	1.2		1.4		1.6		1.8		2.0	
	rpm	vdc	rpm	vdc	rpm	vdc	rpm	vdc	rpm	vdc
1200	1930	8.9	2058	9.5	—	—	—	—	—	—
1300	1960	9.0	2086	9.6	—	—	—	—	—	—
1400	1992	9.2	2116	9.8	—	—	—	—	—	—
1500	2026	9.3	2148	9.9	—	—	—	—	—	—
1600	2062	9.5	—	—	—	—	—	—	—	—
1700	2099	9.7	—	—	—	—	—	—	—	—
1800	2138	9.9	—	—	—	—	—	—	—	—
1900	—	—	—	—	—	—	—	—	—	—
2000	—	—	—	—	—	—	—	—	—	—

Standard/Medium Static 1094-2170 rpm

50FEQA05 Single Phase — High Static — 4 Ton Vertical Supply (rpm - vdc)

CFM	AVAILABLE EXTERNAL STATIC PRESSURE (in. wg)									
	0.2		0.4		0.6		0.8		1.0	
	rpm	vdc	rpm	vdc	rpm	vdc	rpm	vdc	rpm	vdc
1200	1094	4.4	1302	5.3	1484	6.0	1646	6.7	1794	7.3
1300	1150	4.7	1347	5.5	1523	6.2	1681	6.8	1826	7.4
1400	1209	4.9	1395	5.7	1565	6.4	1719	7.0	1860	7.6
1500	1269	5.2	1444	5.9	1608	6.5	1758	7.1	1897	7.7
1600	1332	5.4	1496	6.1	1654	6.7	1800	7.3	1935	7.9
1700	1396	5.7	1549	6.3	1701	6.9	1843	7.5	1975	8.0
1800	1461	5.9	1605	6.5	1750	7.1	1888	7.7	2017	8.2
1900	1528	6.2	1662	6.8	1801	7.3	1934	7.9	2060	8.4
2000	1596	6.5	1721	7.0	1853	7.5	1982	8.1	2105	8.6

CFM	AVAILABLE EXTERNAL STATIC PRESSURE (in. wg)									
	1.2		1.4		1.6		1.8		2.0	
	rpm	vdc	rpm	vdc	rpm	vdc	rpm	vdc	rpm	vdc
1200	1930	7.8	2058	8.4	2177	8.8	2288	9.3	2394	9.7
1300	1960	8.0	2086	8.5	2205	9.0	2316	9.4	2422	9.8
1400	1992	8.1	2116	8.6	2233	9.1	2344	9.5	2450	10.0
1500	2026	8.2	2148	8.7	2263	9.2	2373	9.6	—	—
1600	2062	8.4	2181	8.9	2295	9.3	2403	9.8	—	—
1700	2099	8.5	2217	9.0	2328	9.5	2435	9.9	—	—
1800	2138	8.7	2254	9.2	2363	9.6	—	—	—	—
1900	2179	8.9	2292	9.3	2400	9.8	—	—	—	—
2000	2221	9.0	2332	9.5	2438	9.9	—	—	—	—

High Static 1094-2460 rpm

50FEQA05 Three Phase — 4 Ton Vertical Supply (rpm - bhp)

CFM	AVAILABLE EXTERNAL STATIC PRESSURE (in. wg)									
	0.2		0.4		0.6		0.8		1.0	
	rpm	bhp	rpm	bhp	rpm	bhp	rpm	bhp	rpm	bhp
1200	1094	0.14	1302	0.24	1484	0.35	1646	0.48	1794	0.63
1300	1150	0.16	1347	0.26	1524	0.38	1681	0.51	1826	0.66
1400	1209	0.19	1395	0.29	1565	0.41	1719	0.55	1860	0.69
1500	1269	0.22	1444	0.32	1608	0.45	1759	0.58	1897	0.73
1600	1332	0.25	1496	0.36	1654	0.48	1800	0.62	1935	0.78
1700	1396	0.29	1549	0.40	1701	0.53	1843	0.67	1976	0.82
1800	1461	0.33	1605	0.44	1750	0.57	1888	0.72	2017	0.87
1900	1528	0.38	1662	0.49	1801	0.62	1934	0.77	2060	0.93
2000	1596	0.43	1721	0.54	1853	0.67	1982	0.83	2105	0.99

CFM	AVAILABLE EXTERNAL STATIC PRESSURE (in. wg)									
	1.2		1.4		1.6		1.8		2.0	
	rpm	bhp	rpm	bhp	rpm	bhp	rpm	bhp	rpm	bhp
1200	1930	0.78	2058	0.95	2177	1.12	2288	1.30	2394	1.49
1300	1960	0.81	2086	0.98	2205	1.16	2316	1.34	2422	1.54
1400	1992	0.85	2116	1.02	2233	1.20	2344	1.39	2450	1.58
1500	2026	0.89	2148	1.06	2263	1.24	2373	1.44	2478	1.63
1600	2062	0.94	2181	1.11	2295	1.29	2403	1.49	2507	1.69
1700	2099	0.99	2217	1.16	2328	1.35	2435	1.54	2538	1.75
1800	2138	1.04	2254	1.22	2363	1.40	2469	1.60	2570	1.81
1900	2180	1.10	2292	1.28	2400	1.47	2503	1.67	2603	1.87
2000	2222	1.16	2332	1.34	2438	1.54	2540	1.74	2638	1.95

Standard/Medium Static 1094-2170 rpm, 1.06 max bhp

High Static 1094-2660 rpm, 1.96 max bhp

50FEQA05 Three Phase — Standard/Medium Static — 4 Ton Vertical Supply (rpm - vdc)

CFM	AVAILABLE EXTERNAL STATIC PRESSURE (in. wg)									
	0.2		0.4		0.6		0.8		1.0	
	rpm	vdc	rpm	vdc	rpm	vdc	rpm	vdc	rpm	vdc
1200	1094	5.0	1302	6.0	1484	6.8	1646	7.6	1794	8.3
1300	1150	5.3	1347	6.2	1524	7.0	1681	7.7	1826	8.4
1400	1209	5.6	1395	6.4	1565	7.2	1719	7.9	1860	8.6
1500	1269	5.8	1444	6.7	1608	7.4	1759	8.1	1897	8.7
1600	1332	6.1	1496	6.9	1654	7.6	1800	8.3	1935	8.9
1700	1396	6.4	1549	7.1	1701	7.8	1843	8.5	1976	9.1
1800	1461	6.7	1605	7.4	1750	8.1	1888	8.7	2017	9.3
1900	1528	7.0	1662	7.7	1801	8.3	1934	8.9	2060	9.5
2000	1596	7.4	1721	7.9	1853	8.5	1982	9.1	2105	9.7

CFM	AVAILABLE EXTERNAL STATIC PRESSURE (in. wg)									
	1.2		1.4		1.6		1.8		2.0	
	rpm	vdc	rpm	vdc	rpm	vdc	rpm	vdc	rpm	vdc
1200	1930	8.9	2058	9.5	—	—	—	—	—	—
1300	1960	9.0	2086	9.6	—	—	—	—	—	—
1400	1992	9.2	2116	9.8	—	—	—	—	—	—
1500	2026	9.3	2148	9.9	—	—	—	—	—	—
1600	2062	9.5	—	—	—	—	—	—	—	—
1700	2099	9.7	—	—	—	—	—	—	—	—
1800	2138	9.9	—	—	—	—	—	—	—	—
1900	—	—	—	—	—	—	—	—	—	—
2000	—	—	—	—	—	—	—	—	—	—

Standard/Medium Static 1094-2170 rpm

50FEQA05 Three Phase — High Static — 4 Ton Vertical Supply (rpm - vdc)

CFM	AVAILABLE EXTERNAL STATIC PRESSURE (in. wg)									
	0.2		0.4		0.6		0.8		1.0	
	rpm	vdc	rpm	vdc	rpm	vdc	rpm	vdc	rpm	vdc
1200	1094	4.1	1302	4.9	1484	5.6	1646	6.2	1794	6.7
1300	1150	4.3	1347	5.1	1524	5.7	1681	6.3	1826	6.9
1400	1209	4.5	1395	5.2	1565	5.9	1719	6.5	1860	7.0
1500	1269	4.8	1444	5.4	1608	6.0	1759	6.6	1897	7.1
1600	1332	5.0	1496	5.6	1654	6.2	1800	6.8	1935	7.3
1700	1396	5.2	1549	5.8	1701	6.4	1843	6.9	1976	7.4
1800	1461	5.5	1605	6.0	1750	6.6	1888	7.1	2017	7.6
1900	1528	5.7	1662	6.2	1801	6.8	1934	7.3	2060	7.7
2000	1596	6.0	1721	6.5	1853	7.0	1982	7.5	2105	7.9

CFM	AVAILABLE EXTERNAL STATIC PRESSURE (in. wg)									
	1.2		1.4		1.6		1.8		2.0	
	rpm	vdc	rpm	vdc	rpm	vdc	rpm	vdc	rpm	vdc
1200	1930	7.3	2058	7.7	2177	8.2	2288	8.6	2394	9.0
1300	1960	7.4	2086	7.8	2205	8.3	2316	8.7	2422	9.1
1400	1992	7.5	2116	8.0	2233	8.4	2344	8.8	2450	9.2
1500	2026	7.6	2148	8.1	2263	8.5	2373	8.9	2478	9.3
1600	2062	7.8	2181	8.2	2295	8.6	2403	9.0	2507	9.4
1700	2099	7.9	2217	8.3	2328	8.8	2435	9.2	2538	9.5
1800	2138	8.0	2254	8.5	2363	8.9	2469	9.3	2570	9.7
1900	2180	8.2	2292	8.6	2400	9.0	2503	9.4	2603	9.8
2000	2222	8.4	2332	8.8	2438	9.2	2540	9.5	2638	9.9

High Static 1094-2660 rpm

50FEQA06 Single Phase — 5 Ton Vertical Supply (rpm - bhp)

CFM	AVAILABLE EXTERNAL STATIC PRESSURE (in. wg)									
	0.2		0.4		0.6		0.8		1.0	
	rpm	bhp	rpm	bhp	rpm	bhp	rpm	bhp	rpm	bhp
1500	1228	0.20	1394	0.29	1554	0.40	1701	0.53	1836	0.66
1625	1305	0.24	1457	0.33	1609	0.44	1750	0.57	1882	0.71
1750	1384	0.28	1523	0.37	1666	0.49	1802	0.62	1930	0.76
1875	1466	0.33	1592	0.43	1726	0.54	1857	0.67	1981	0.82
2000	1549	0.39	1664	0.48	1789	0.60	1914	0.74	2034	0.88
2125	1633	0.46	1739	0.55	1855	0.67	1974	0.81	2089	0.95
2250	1718	0.53	1816	0.63	1924	0.74	2036	0.88	2146	1.03
2375	1803	0.61	1894	0.71	1995	0.83	2100	0.97	2206	1.12
2500	1890	0.70	1974	0.80	2068	0.92	2167	1.06	2268	1.21

CFM	AVAILABLE EXTERNAL STATIC PRESSURE (in. wg)									
	1.2		1.4		1.6		1.8		2.0	
	rpm	bhp	rpm	bhp	rpm	bhp	rpm	bhp	rpm	bhp
1500	1961	0.80	2079	0.96	2191	1.12	2297	1.29	2399	1.47
1625	2004	0.85	2120	1.01	2229	1.18	2334	1.35	2434	1.53
1750	2050	0.91	2163	1.07	2270	1.24	2373	1.41	2472	1.60
1875	2098	0.97	2208	1.13	2314	1.31	2414	1.48	2511	1.67
2000	2148	1.04	2256	1.21	2359	1.38	2458	1.56	2553	1.75
2125	2200	1.11	2305	1.28	2407	1.46	2504	1.64	2597	1.83
2250	2254	1.20	2357	1.37	2456	1.55	2551	1.73	2643	1.93
2375	2310	1.28	2410	1.46	2507	1.64	2600	1.83	—	—
2500	2368	1.38	2465	1.56	2560	1.75	2651	1.94	—	—

Standard/Medium Static 1228-2390 rpm, 1.44 max bhp

High Static 1228-2660 rpm, 1.96 max bhp

50FEQA06 Single Phase — Standard/Medium Static — 5 Ton Vertical Supply (rpm - vdc)

CFM	AVAILABLE EXTERNAL STATIC PRESSURE (in. wg)									
	0.2		0.4		0.6		0.8		1.0	
	rpm	vdc	rpm	vdc	rpm	vdc	rpm	vdc	rpm	vdc
1500	1228	5.1	1394	5.8	1554	6.5	1701	7.1	1836	7.7
1625	1305	5.5	1457	6.1	1609	6.7	1750	7.3	1882	7.9
1750	1384	5.8	1523	6.4	1666	7.0	1802	7.5	1930	8.1
1875	1466	6.1	1592	6.7	1726	7.2	1857	7.8	1981	8.3
2000	1549	6.5	1664	7.0	1789	7.5	1914	8.0	2034	8.5
2125	1633	6.8	1739	7.3	1855	7.8	1974	8.3	2089	8.7
2250	1718	7.2	1816	7.6	1924	8.1	2036	8.5	2146	9.0
2375	1803	7.5	1894	7.9	1995	8.3	2100	8.8	2206	9.2
2500	1890	7.9	1974	8.3	2068	8.7	2167	9.1	2268	9.5

CFM	AVAILABLE EXTERNAL STATIC PRESSURE (in. wg)									
	1.2		1.4		1.6		1.8		2.0	
	rpm	vdc	rpm	vdc	rpm	vdc	rpm	vdc	rpm	vdc
1500	1961	8.2	2079	8.7	2191	9.2	2297	9.6	—	—
1625	2004	8.4	2120	8.9	2229	9.3	2334	9.8	—	—
1750	2050	8.6	2163	9.1	2270	9.5	2373	9.9	—	—
1875	2098	8.8	2208	9.2	2314	9.7	—	—	—	—
2000	2148	9.0	2256	9.4	2359	9.9	—	—	—	—
2125	2200	9.2	2305	9.6	—	—	—	—	—	—
2250	2254	9.4	2357	9.9	—	—	—	—	—	—
2375	2310	9.7	—	—	—	—	—	—	—	—
2500	2368	9.9	—	—	—	—	—	—	—	—

Standard/Medium Static 1228-2390 rpm

50FEQA06 Single Phase — High Static — 5 Ton Vertical Supply (rpm - vdc)

CFM	AVAILABLE EXTERNAL STATIC PRESSURE (in. wg)									
	0.2		0.4		0.6		0.8		1.0	
	rpm	vdc	rpm	vdc	rpm	vdc	rpm	vdc	rpm	vdc
1500	1228	4.6	1394	5.2	1554	5.8	1701	6.4	1836	6.9
1625	1305	4.9	1457	5.5	1609	6.0	1750	6.6	1882	7.1
1750	1384	5.2	1523	5.7	1666	6.3	1802	6.8	1930	7.3
1875	1466	5.5	1592	6.0	1726	6.5	1857	7.0	1981	7.4
2000	1549	5.8	1664	6.3	1789	6.7	1914	7.2	2034	7.6
2125	1633	6.1	1739	6.5	1855	7.0	1974	7.4	2089	7.9
2250	1718	6.5	1816	6.8	1924	7.2	2036	7.7	2146	8.1
2375	1803	6.8	1894	7.1	1995	7.5	2100	7.9	2206	8.3
2500	1890	7.1	1974	7.4	2068	7.8	2167	8.1	2268	8.5

CFM	AVAILABLE EXTERNAL STATIC PRESSURE (in. wg)									
	1.2		1.4		1.6		1.8		2.0	
	rpm	vdc	rpm	vdc	rpm	vdc	rpm	vdc	rpm	vdc
1500	1961	7.4	2079	7.8	2191	8.2	2297	8.6	2399	9.0
1625	2004	7.5	2120	8.0	2229	8.4	2334	8.8	2434	9.2
1750	2050	7.7	2163	8.1	2270	8.5	2373	8.9	2472	9.3
1875	2098	7.9	2208	8.3	2314	8.7	2414	9.1	2511	9.4
2000	2148	8.1	2256	8.5	2359	8.9	2458	9.2	2553	9.6
2125	2200	8.3	2305	8.7	2407	9.0	2504	9.4	2597	9.8
2250	2254	8.5	2357	8.9	2456	9.2	2551	9.6	2643	9.9
2375	2310	8.7	2410	9.1	2507	9.4	2600	9.8	—	—
2500	2368	8.9	2465	9.3	2560	9.6	2651	10.0	—	—

High Static 1228-2660 rpm

50FEQA06 Three Phase — 5 Ton Vertical Supply (rpm - bhp)

CFM	AVAILABLE EXTERNAL STATIC PRESSURE (in. wg)									
	0.2		0.4		0.6		0.8		1.0	
	rpm	bhp	rpm	bhp	rpm	bhp	rpm	bhp	rpm	bhp
1500	1228	0.20	1394	0.29	1554	0.40	1701	0.53	1836	0.66
1625	1305	0.24	1457	0.33	1609	0.44	1750	0.57	1882	0.71
1750	1384	0.28	1523	0.37	1666	0.49	1802	0.62	1930	0.76
1875	1466	0.33	1592	0.43	1726	0.54	1857	0.67	1981	0.82
2000	1549	0.39	1664	0.48	1789	0.60	1914	0.74	2034	0.88
2125	1633	0.46	1739	0.55	1855	0.67	1974	0.81	2089	0.95
2250	1718	0.53	1816	0.63	1924	0.74	2036	0.88	2146	1.03
2375	1803	0.61	1894	0.71	1995	0.83	2100	0.97	2206	1.12
2500	1889	0.70	1974	0.80	2068	0.92	2167	1.06	2268	1.21

CFM	AVAILABLE EXTERNAL STATIC PRESSURE (in. wg)									
	1.2		1.4		1.6		1.8		2.0	
	rpm	bhp	rpm	bhp	rpm	bhp	rpm	bhp	rpm	bhp
1500	1961	0.80	2079	0.96	2191	1.12	2297	1.29	2399	1.47
1625	2004	0.85	2120	1.01	2229	1.18	2334	1.35	2434	1.53
1750	2050	0.91	2163	1.07	2271	1.24	2373	1.41	2472	1.60
1875	2098	0.97	2208	1.13	2314	1.31	2415	1.48	2511	1.67
2000	2148	1.04	2256	1.21	2359	1.38	2458	1.56	2553	1.75
2125	2200	1.11	2305	1.28	2407	1.46	2504	1.64	2597	1.83
2250	2254	1.20	2357	1.37	2456	1.55	2551	1.73	2643	1.93
2375	2310	1.28	2410	1.46	2507	1.64	2600	1.83	2690	2.03
2500	2368	1.38	2465	1.56	2560	1.75	2651	1.94	2739	2.14

Standard/Medium Static 1228-2390 rpm, 1.44 max bhp

High Static 1228-2836 rpm, 2.43 max bhp

50FEQA06 Three Phase — Standard/Medium Static — 5 Ton Vertical Supply (rpm - vdc)

CFM	AVAILABLE EXTERNAL STATIC PRESSURE (in. wg)									
	0.2		0.4		0.6		0.8		1.0	
	rpm	vdc	rpm	vdc	rpm	vdc	rpm	vdc	rpm	vdc
1500	1228	5.1	1394	5.8	1554	6.5	1701	7.1	1836	7.7
1625	1305	5.5	1457	6.1	1609	6.7	1750	7.3	1882	7.9
1750	1384	5.8	1523	6.4	1666	7.0	1802	7.5	1930	8.1
1875	1466	6.1	1592	6.7	1726	7.2	1857	7.8	1981	8.3
2000	1549	6.5	1664	7.0	1789	7.5	1914	8.0	2034	8.5
2125	1633	6.8	1739	7.3	1855	7.8	1974	8.3	2089	8.7
2250	1718	7.2	1816	7.6	1924	8.1	2036	8.5	2146	9.0
2375	1803	7.5	1894	7.9	1995	8.3	2100	8.8	2206	9.2
2500	1889	7.9	1974	8.3	2068	8.7	2167	9.1	2268	9.5

CFM	AVAILABLE EXTERNAL STATIC PRESSURE (in. wg)									
	1.2		1.4		1.6		1.8		2.0	
	rpm	vdc	rpm	vdc	rpm	vdc	rpm	vdc	rpm	vdc
1500	1961	8.2	2079	8.7	2191	9.2	2297	9.6	—	—
1625	2004	8.4	2120	8.9	2229	9.3	2334	9.8	—	—
1750	2050	8.6	2163	9.1	2271	9.5	2373	9.9	—	—
1875	2098	8.8	2208	9.2	2314	9.7	—	—	—	—
2000	2148	9.0	2256	9.4	2359	9.9	—	—	—	—
2125	2200	9.2	2305	9.6	—	—	—	—	—	—
2250	2254	9.4	2357	9.9	—	—	—	—	—	—
2375	2310	9.7	—	—	—	—	—	—	—	—
2500	2368	9.9	—	—	—	—	—	—	—	—

Standard/Medium Static 1228-2390 rpm

50FEQA06 Three Phase — High Static — 5 Ton Vertical Supply (rpm - vdc)

CFM	AVAILABLE EXTERNAL STATIC PRESSURE (in. wg)									
	0.2		0.4		0.6		0.8		1.0	
	rpm	vdc	rpm	vdc	rpm	vdc	rpm	vdc	rpm	vdc
1500	1228	4.3	1394	4.9	1554	5.5	1701	6.0	1836	6.5
1625	1305	4.6	1457	5.1	1609	5.7	1750	6.2	1882	6.6
1750	1384	4.9	1523	5.4	1666	5.9	1802	6.4	1930	6.8
1875	1466	5.2	1592	5.6	1726	6.1	1857	6.5	1981	7.0
2000	1549	5.5	1664	5.9	1789	6.3	1914	6.7	2034	7.2
2125	1633	5.8	1739	6.1	1855	6.5	1974	7.0	2089	7.4
2250	1718	6.1	1816	6.4	1924	6.8	2036	7.2	2146	7.6
2375	1803	6.4	1894	6.7	1995	7.0	2100	7.4	2206	7.8
2500	1889	6.7	1974	7.0	2068	7.3	2167	7.6	2268	8.0

CFM	AVAILABLE EXTERNAL STATIC PRESSURE (in. wg)									
	1.2		1.4		1.6		1.8		2.0	
	rpm	vdc	rpm	vdc	rpm	vdc	rpm	vdc	rpm	vdc
1500	1961	6.9	2079	7.3	2191	7.7	2297	8.1	2399	8.5
1625	2004	7.1	2120	7.5	2229	7.9	2334	8.2	2434	8.6
1750	2050	7.2	2163	7.6	2271	8.0	2373	8.4	2472	8.7
1875	2098	7.4	2208	7.8	2314	8.2	2415	8.5	2511	8.9
2000	2148	7.6	2256	8.0	2359	8.3	2458	8.7	2553	9.0
2125	2200	7.8	2305	8.1	2407	8.5	2504	8.8	2597	9.2
2250	2254	7.9	2357	8.3	2456	8.7	2551	9.0	2643	9.3
2375	2310	8.1	2410	8.5	2507	8.8	2600	9.2	2690	9.5
2500	2368	8.3	2465	8.7	2560	9.0	2651	9.3	2739	9.7

High Static 1228-2836 rpm

50FEQM07 Three Phase — 6 Ton Vertical Supply (rpm - bhp)

CFM	AVAILABLE EXTERNAL STATIC PRESSURE (in. wg)									
	0.2		0.4		0.6		0.8		1.0	
	rpm	bhp	rpm	bhp	rpm	bhp	rpm	bhp	rpm	bhp
1800	1416	0.30	1549	0.39	1690	0.51	1824	0.64	1950	0.78
1950	1516	0.37	1635	0.46	1764	0.58	1891	0.71	2012	0.86
2100	1616	0.44	1724	0.54	1841	0.65	1961	0.79	2078	0.94
2250	1718	0.53	1815	0.62	1924	0.74	2036	0.88	2146	1.03
2400	1820	0.63	1910	0.73	2009	0.84	2113	0.98	2218	1.14
2550	1924	0.74	2007	0.84	2098	0.96	2195	1.10	2293	1.25
2700	2028	0.87	2105	0.97	2189	1.09	2279	1.23	2371	1.38
2850	2133	1.01	2205	1.11	2282	1.23	2366	1.37	2453	1.53
3000	2239	1.16	2306	1.27	2378	1.39	2456	1.53	2537	1.69

CFM	AVAILABLE EXTERNAL STATIC PRESSURE (in. wg)									
	1.2		1.4		1.6		1.8		2.0	
	rpm	bhp	rpm	bhp	rpm	bhp	rpm	bhp	rpm	bhp
1800	2069	0.93	2181	1.10	2287	1.26	2389	1.44	2487	1.62
1950	2127	1.01	2237	1.18	2341	1.35	2440	1.53	2536	1.71
2100	2189	1.10	2295	1.27	2397	1.44	2494	1.63	2588	1.82
2250	2254	1.20	2357	1.37	2456	1.55	2551	1.73	2643	1.93
2400	2321	1.30	2421	1.48	2517	1.66	2610	1.85	2700	2.05
2550	2392	1.42	2488	1.60	2581	1.79	2672	1.98	2759	2.18
2700	2465	1.55	2557	1.73	2648	1.93	2736	2.13	2821	2.33
2850	2541	1.70	2630	1.88	2717	2.08	2802	2.28	—	—
3000	2621	1.86	2705	2.05	2788	2.24	—	—	—	—

Standard/Medium Static 1416-2530 rpm, 1.76 max bhp

High Static 1416-2836 rpm, 2.43 max bhp

50FEQM07 Three Phase — Standard/Medium Static — 6 Ton Vertical Supply (rpm - vdc)

CFM	AVAILABLE EXTERNAL STATIC PRESSURE (in. wg)									
	0.2		0.4		0.6		0.8		1.0	
	rpm	vdc	rpm	vdc	rpm	vdc	rpm	vdc	rpm	vdc
1800	1416	5.6	1549	6.1	1690	6.7	1824	7.2	1950	7.7
1950	1516	6.0	1635	6.5	1764	7.0	1891	7.5	2012	8.0
2100	1616	6.4	1724	6.8	1841	7.3	1961	7.8	2078	8.2
2250	1718	6.8	1815	7.2	1924	7.6	2036	8.0	2146	8.5
2400	1820	7.2	1910	7.5	2009	7.9	2113	8.4	2218	8.8
2550	1924	7.6	2007	7.9	2098	8.3	2195	8.7	2293	9.1
2700	2028	8.0	2105	8.3	2189	8.7	2279	9.0	2371	9.4
2850	2133	8.4	2205	8.7	2282	9.0	2366	9.4	2453	9.7
3000	2239	8.8	2306	9.1	2378	9.4	2456	9.7	—	—

CFM	AVAILABLE EXTERNAL STATIC PRESSURE (in. wg)									
	1.2		1.4		1.6		1.8		2.0	
	rpm	vdc	rpm	vdc	rpm	vdc	rpm	vdc	rpm	vdc
1800	2069	8.2	2181	8.6	2287	9.0	2389	9.4	2487	9.8
1950	2127	8.4	2237	8.8	2341	9.3	2440	9.6	—	—
2100	2189	8.7	2295	9.1	2397	9.5	2494	9.9	—	—
2250	2254	8.9	2357	9.3	2456	9.7	—	—	—	—
2400	2321	9.2	2421	9.6	2517	9.9	—	—	—	—
2550	2392	9.5	2488	9.8	—	—	—	—	—	—
2700	2465	9.7	—	—	—	—	—	—	—	—
2850	—	—	—	—	—	—	—	—	—	—
3000	—	—	—	—	—	—	—	—	—	—

Standard/Medium Static 1416-2530 rpm

50FEQM07 Three Phase — High Static — 6 Ton Vertical Supply (rpm - vdc)

CFM	AVAILABLE EXTERNAL STATIC PRESSURE (in. wg)									
	0.2		0.4		0.6		0.8		1.0	
	rpm	vdc	rpm	vdc	rpm	vdc	rpm	vdc	rpm	vdc
1800	1416	5.0	1549	5.5	1690	6.0	1824	6.4	1950	6.9
1950	1516	5.3	1635	5.8	1764	6.2	1891	6.7	2012	7.1
2100	1616	5.7	1724	6.1	1841	6.5	1961	6.9	2078	7.3
2250	1718	6.1	1815	6.4	1924	6.8	2036	7.2	2146	7.6
2400	1820	6.4	1910	6.7	2009	7.1	2113	7.5	2218	7.8
2550	1924	6.8	2007	7.1	2098	7.4	2195	7.7	2293	8.1
2700	2028	7.2	2105	7.4	2189	7.7	2279	8.0	2371	8.4
2850	2133	7.5	2205	7.8	2282	8.0	2366	8.3	2453	8.6
3000	2239	7.9	2306	8.1	2378	8.4	2456	8.7	2537	8.9

CFM	AVAILABLE EXTERNAL STATIC PRESSURE (in. wg)									
	1.2		1.4		1.6		1.8		2.0	
	rpm	vdc	rpm	vdc	rpm	vdc	rpm	vdc	rpm	vdc
1800	2069	7.3	2181	7.7	2287	8.1	2389	8.4	2487	8.8
1950	2127	7.5	2237	7.9	2341	8.3	2440	8.6	2536	8.9
2100	2189	7.7	2295	8.1	2397	8.5	2494	8.8	2588	9.1
2250	2254	7.9	2357	8.3	2456	8.7	2551	9.0	2643	9.3
2400	2321	8.2	2421	8.5	2517	8.9	2610	9.2	2700	9.5
2550	2392	8.4	2488	8.8	2581	9.1	2672	9.4	2759	9.7
2700	2465	8.7	2557	9.0	2648	9.3	2736	9.6	2821	9.9
2850	2541	9.0	2630	9.3	2717	9.6	2802	9.9	—	—
3000	2621	9.2	2705	9.5	2788	9.8	—	—	—	—

High Static 1416-2836 rpm

50FEQA04 Single Phase — 3 Ton Horizontal Supply (rpm - bhp)

CFM	AVAILABLE EXTERNAL STATIC PRESSURE (in. wg)									
	0.2		0.4		0.6		0.8		1.0	
	rpm	bhp	rpm	bhp	rpm	bhp	rpm	bhp	rpm	bhp
900	1036	0.08	1301	0.15	1517	0.24	1698	0.34	1855	0.44
975	1077	0.09	1331	0.16	1546	0.26	1727	0.36	1885	0.47
1050	1119	0.10	1362	0.18	1574	0.27	1755	0.38	1915	0.49
1125	1164	0.11	1394	0.19	1603	0.29	1783	0.39	1944	0.51
1200	1211	0.12	1429	0.20	1632	0.30	1813	0.41	1972	0.53
1275	1261	0.14	1466	0.22	1663	0.32	1841	0.43	2000	0.56
1350	1312	0.16	1506	0.24	1695	0.34	1870	0.46	2029	0.58
1425	1365	0.18	1547	0.26	1729	0.36	1901	0.48	2057	0.61
1500	1419	0.20	1591	0.28	1765	0.38	1932	0.50	2087	0.63

CFM	AVAILABLE EXTERNAL STATIC PRESSURE (in. wg)									
	1.2		1.4		1.6		1.8		2.0	
	rpm	bhp	rpm	bhp	rpm	bhp	rpm	bhp	rpm	bhp
900	1996	0.55	2123	0.67	2242	0.78	2352	0.91	2455	1.03
975	2027	0.58	2157	0.70	2276	0.82	2387	0.95	—	—
1050	2058	0.61	2189	0.73	2309	0.86	2421	0.99	—	—
1125	2088	0.63	2219	0.76	2341	0.89	2454	1.03	—	—
1200	2117	0.66	2249	0.79	2372	0.93	2486	1.07	—	—
1275	2146	0.69	2278	0.82	2402	0.97	—	—	—	—
1350	2174	0.72	2307	0.86	2431	1.00	—	—	—	—
1425	2202	0.74	2336	0.89	2460	1.04	—	—	—	—
1500	2230	0.77	2364	0.92	2488	1.07	—	—	—	—

Standard/Medium Static 1036-2190 rpm, 0.71 max bhp

High Static 1036-2490 rpm, 1.07 max bhp

50FEQA04 Single Phase — Standard/Medium Static — 3 Ton Horizontal Supply (rpm - vdc)

CFM	AVAILABLE EXTERNAL STATIC PRESSURE (in. wg)									
	0.2		0.4		0.6		0.8		1.0	
	rpm	vdc	rpm	vdc	rpm	vdc	rpm	vdc	rpm	vdc
900	1036	4.7	1301	5.9	1517	6.9	1698	7.8	1855	8.5
975	1077	4.9	1331	6.1	1546	7.1	1727	7.9	1885	8.6
1050	1119	5.1	1362	6.2	1574	7.2	1755	8.0	1915	8.7
1125	1164	5.3	1394	6.4	1603	7.3	1783	8.1	1944	8.9
1200	1211	5.5	1429	6.5	1632	7.5	1813	8.3	1972	9.0
1275	1261	5.8	1466	6.7	1663	7.6	1841	8.4	2000	9.1
1350	1312	6.0	1506	6.9	1695	7.7	1870	8.5	2029	9.3
1425	1365	6.2	1547	7.1	1729	7.9	1901	8.7	2057	9.4
1500	1419	6.5	1591	7.3	1765	8.1	1932	8.8	2087	9.5

CFM	AVAILABLE EXTERNAL STATIC PRESSURE (in. wg)									
	1.2		1.4		1.6		1.8		2.0	
	rpm	vdc	rpm	vdc	rpm	vdc	rpm	vdc	rpm	vdc
900	1996	9.1	2123	9.7	—	—	—	—	—	—
975	2027	9.3	2157	9.8	—	—	—	—	—	—
1050	2058	9.4	2189	10.0	—	—	—	—	—	—
1125	2088	9.5	—	—	—	—	—	—	—	—
1200	2117	9.7	—	—	—	—	—	—	—	—
1275	2146	9.8	—	—	—	—	—	—	—	—
1350	2174	9.9	—	—	—	—	—	—	—	—
1425	—	—	—	—	—	—	—	—	—	—
1500	—	—	—	—	—	—	—	—	—	—

Standard/Medium Static 1036-2190 rpm

50FEQA04 Single Phase — High Static — 3 Ton Horizontal Supply (rpm - vdc)

CFM	AVAILABLE EXTERNAL STATIC PRESSURE (in. wg)									
	0.2		0.4		0.6		0.8		1.0	
	rpm	vdc	rpm	vdc	rpm	vdc	rpm	vdc	rpm	vdc
900	1036	4.2	1301	5.2	1517	6.1	1698	6.8	1855	7.4
975	1077	4.3	1331	5.3	1546	6.2	1727	6.9	1885	7.6
1050	1119	4.5	1362	5.5	1574	6.3	1755	7.0	1915	7.7
1125	1164	4.7	1394	5.6	1603	6.4	1783	7.2	1944	7.8
1200	1211	4.9	1429	5.7	1632	6.6	1813	7.3	1972	7.9
1275	1261	5.1	1466	5.9	1663	6.7	1841	7.4	2000	8.0
1350	1312	5.3	1506	6.0	1695	6.8	1870	7.5	2029	8.1
1425	1365	5.5	1547	6.2	1729	6.9	1901	7.6	2057	8.3
1500	1419	5.7	1591	6.4	1765	7.1	1932	7.8	2087	8.4

CFM	AVAILABLE EXTERNAL STATIC PRESSURE (in. wg)									
	1.2		1.4		1.6		1.8		2.0	
	rpm	vdc	rpm	vdc	rpm	vdc	rpm	vdc	rpm	vdc
900	1996	8.0	2123	8.5	2242	9.0	2352	9.4	2455	9.9
975	2027	8.1	2157	8.7	2276	9.1	2387	9.6	—	—
1050	2058	8.3	2189	8.8	2309	9.3	2421	9.7	—	—
1125	2088	8.4	2219	8.9	2341	9.4	2454	9.9	—	—
1200	2117	8.5	2249	9.0	2372	9.5	2486	10.0	—	—
1275	2146	8.6	2278	9.1	2402	9.6	—	—	—	—
1350	2174	8.7	2307	9.3	2431	9.8	—	—	—	—
1425	2202	8.8	2336	9.4	2460	9.9	—	—	—	—
1500	2230	9.0	2364	9.5	2488	10.0	—	—	—	—

High Static 1036-2490 rpm

50FEQA04 Three Phase — 3 Ton Horizontal Supply (rpm - bhp)

CFM	AVAILABLE EXTERNAL STATIC PRESSURE (in. wg)									
	0.2		0.4		0.6		0.8		1.0	
	rpm	bhp	rpm	bhp	rpm	bhp	rpm	bhp	rpm	bhp
900	1036	0.08	1301	0.15	1517	0.24	1698	0.34	1855	0.44
975	1076	0.09	1330	0.16	1545	0.26	1727	0.36	1885	0.47
1050	1119	0.10	1361	0.18	1573	0.27	1756	0.38	1915	0.49
1125	1164	0.11	1395	0.19	1602	0.29	1784	0.40	1944	0.51
1200	1211	0.12	1429	0.20	1632	0.30	1812	0.41	1973	0.53
1275	1261	0.14	1466	0.22	1663	0.32	1841	0.43	2001	0.56
1350	1313	0.16	1506	0.24	1695	0.34	1870	0.46	2029	0.58
1425	1366	0.18	1548	0.26	1729	0.36	1900	0.48	2058	0.61
1500	1420	0.20	1591	0.28	1765	0.38	1932	0.50	2087	0.63

CFM	AVAILABLE EXTERNAL STATIC PRESSURE (in. wg)									
	1.2		1.4		1.6		1.8		2.0	
	rpm	bhp	rpm	bhp	rpm	bhp	rpm	bhp	rpm	bhp
900	1995	0.55	2124	0.67	2242	0.78	2352	0.91	2455	1.03
975	2027	0.58	2157	0.70	2276	0.82	2387	0.95	—	—
1050	2058	0.61	2189	0.73	2309	0.86	2421	0.99	—	—
1125	2088	0.63	2219	0.76	2341	0.89	2454	1.03	—	—
1200	2117	0.66	2249	0.79	2372	0.93	2485	1.07	—	—
1275	2146	0.69	2278	0.82	2401	0.96	—	—	—	—
1350	2174	0.72	2307	0.86	2431	1.00	—	—	—	—
1425	2202	0.74	2335	0.89	2460	1.04	—	—	—	—
1500	2231	0.77	2364	0.92	2488	1.07	—	—	—	—

Standard/Medium Static 1136-2190 rpm, 0.71 max bhp

High Static 1136-2490 rpm, 1.07 max bhp

50FEQA04 Three Phase — Standard/Medium Static — 3 Ton Horizontal Supply (rpm - vdc)

CFM	AVAILABLE EXTERNAL STATIC PRESSURE (in. wg)									
	0.2		0.4		0.6		0.8		1.0	
	rpm	vdc	rpm	vdc	rpm	vdc	rpm	vdc	rpm	vdc
900	1036	4.7	1301	5.9	1517	6.9	1698	7.8	1855	8.5
975	1076	4.9	1330	6.1	1545	7.1	1727	7.9	1885	8.6
1050	1119	5.1	1361	6.2	1573	7.2	1756	8.0	1915	8.7
1125	1164	5.3	1395	6.4	1602	7.3	1784	8.1	1944	8.9
1200	1211	5.5	1429	6.5	1632	7.5	1812	8.3	1973	9.0
1275	1261	5.8	1466	6.7	1663	7.6	1841	8.4	2001	9.1
1350	1313	6.0	1506	6.9	1695	7.7	1870	8.5	2029	9.3
1425	1366	6.2	1548	7.1	1729	7.9	1900	8.7	2058	9.4
1500	1420	6.5	1591	7.3	1765	8.1	1932	8.8	2087	9.5

CFM	AVAILABLE EXTERNAL STATIC PRESSURE (in. wg)									
	1.2		1.4		1.6		1.8		2.0	
	rpm	vdc	rpm	vdc	rpm	vdc	rpm	vdc	rpm	vdc
900	1995	9.1	2124	9.7	—	—	—	—	—	—
975	2027	9.3	2157	9.8	—	—	—	—	—	—
1050	2058	9.4	2189	10.0	—	—	—	—	—	—
1125	2088	9.5	—	—	—	—	—	—	—	—
1200	2117	9.7	—	—	—	—	—	—	—	—
1275	2146	9.8	—	—	—	—	—	—	—	—
1350	2174	9.9	—	—	—	—	—	—	—	—
1425	—	—	—	—	—	—	—	—	—	—
1500	—	—	—	—	—	—	—	—	—	—

Standard/Medium Static 1136-2190 rpm

50FEQA04 Three Phase — High Static — 3 Ton Horizontal Supply (rpm - vdc)

CFM	AVAILABLE EXTERNAL STATIC PRESSURE (in. wg)									
	0.2		0.4		0.6		0.8		1.0	
	rpm	vdc	rpm	vdc	rpm	vdc	rpm	vdc	rpm	vdc
900	1036	4.2	1301	5.2	1517	6.1	1698	6.8	1855	7.4
975	1076	4.3	1330	5.3	1545	6.2	1727	6.9	1885	7.6
1050	1119	4.5	1361	5.5	1573	6.3	1756	7.1	1915	7.7
1125	1164	4.7	1395	5.6	1602	6.4	1784	7.2	1944	7.8
1200	1211	4.9	1429	5.7	1632	6.6	1812	7.3	1973	7.9
1275	1261	5.1	1466	5.9	1663	6.7	1841	7.4	2001	8.0
1350	1313	5.3	1506	6.0	1695	6.8	1870	7.5	2029	8.1
1425	1366	5.5	1548	6.2	1729	6.9	1900	7.6	2058	8.3
1500	1420	5.7	1591	6.4	1765	7.1	1932	7.8	2087	8.4

CFM	AVAILABLE EXTERNAL STATIC PRESSURE (in. wg)									
	1.2		1.4		1.6		1.8		2.0	
	rpm	vdc	rpm	vdc	rpm	vdc	rpm	vdc	rpm	vdc
900	1995	8.0	2124	8.5	2242	9.0	2352	9.4	2455	9.9
975	2027	8.1	2157	8.7	2276	9.1	2387	9.6	—	—
1050	2058	8.3	2189	8.8	2309	9.3	2421	9.7	—	—
1125	2088	8.4	2219	8.9	2341	9.4	2454	9.9	—	—
1200	2117	8.5	2249	9.0	2372	9.5	2485	10.0	—	—
1275	2146	8.6	2278	9.1	2401	9.6	—	—	—	—
1350	2174	8.7	2307	9.3	2431	9.8	—	—	—	—
1425	2202	8.8	2335	9.4	2460	9.9	—	—	—	—
1500	2231	9.0	2364	9.5	2488	10.0	—	—	—	—

High Static 1136-2490 rpm

50FEQC05 Single Phase — 4 Ton Horizontal Supply (rpm - bhp)

CFM	AVAILABLE EXTERNAL STATIC PRESSURE (in. wg)									
	0.2		0.4		0.6		0.8		1.0	
	rpm	bhp	rpm	bhp	rpm	bhp	rpm	bhp	rpm	bhp
1200	1066	0.13	1280	0.22	1473	0.34	1644	0.47	1798	0.61
1300	1120	0.15	1320	0.24	1506	0.36	1674	0.49	1826	0.64
1400	1177	0.17	1363	0.26	1541	0.38	1705	0.52	1856	0.67
1500	1236	0.20	1409	0.29	1579	0.41	1739	0.55	1886	0.70
1600	1297	0.23	1458	0.32	1620	0.44	1774	0.58	1918	0.73
1700	1359	0.26	1509	0.35	1663	0.47	1811	0.61	1952	0.77
1800	1423	0.30	1563	0.39	1708	0.51	1851	0.65	1987	0.81
1900	1487	0.34	1619	0.44	1756	0.56	1893	0.70	2025	0.85
2000	1552	0.38	1677	0.48	1806	0.60	1937	0.74	2064	0.90

CFM	AVAILABLE EXTERNAL STATIC PRESSURE (in. wg)									
	1.2		1.4		1.6		1.8		2.0	
	rpm	bhp	rpm	bhp	rpm	bhp	rpm	bhp	rpm	bhp
1200	1938	0.77	2069	0.93	2192	1.11	2309	1.29	2420	1.49
1300	1965	0.79	2095	0.96	2216	1.14	2331	1.33	2441	1.52
1400	1993	0.82	2121	0.99	2242	1.17	2356	1.36	—	—
1500	2023	0.86	2149	1.03	2269	1.21	2382	1.40	—	—
1600	2053	0.89	2178	1.07	2297	1.25	2409	1.45	—	—
1700	2084	0.93	2209	1.11	2326	1.30	2437	1.49	—	—
1800	2117	0.98	2239	1.15	2356	1.34	—	—	—	—
1900	2151	1.02	2272	1.20	2386	1.39	—	—	—	—
2000	2187	1.07	2305	1.25	2418	1.45	—	—	—	—

Standard/Medium Static 1066-2170 rpm, 1.06 max bhp

High Static 1066-2460 rpm, 1.53 max bhp

50FEQC05 Single Phase — Standard/Medium Static — 4 Ton Horizontal Supply (rpm - vdc)

CFM	AVAILABLE EXTERNAL STATIC PRESSURE (in. wg)									
	0.2		0.4		0.6		0.8		1.0	
	rpm	vdc	rpm	vdc	rpm	vdc	rpm	vdc	rpm	vdc
1200	1066	4.9	1280	5.9	1473	6.8	1644	7.6	1798	8.3
1300	1120	5.2	1320	6.1	1506	6.9	1674	7.7	1826	8.4
1400	1177	5.4	1363	6.3	1541	7.1	1705	7.9	1856	8.6
1500	1236	5.7	1409	6.5	1579	7.3	1739	8.0	1886	8.7
1600	1297	6.0	1458	6.7	1620	7.5	1774	8.2	1918	8.8
1700	1359	6.3	1509	7.0	1663	7.7	1811	8.3	1952	9.0
1800	1423	6.6	1563	7.2	1708	7.9	1851	8.5	1987	9.2
1900	1487	6.9	1619	7.5	1756	8.1	1893	8.7	2025	9.3
2000	1552	7.2	1677	7.7	1806	8.3	1937	8.9	2064	9.5

CFM	AVAILABLE EXTERNAL STATIC PRESSURE (in. wg)									
	1.2		1.4		1.6		1.8		2.0	
	rpm	vdc	rpm	vdc	rpm	vdc	rpm	vdc	rpm	vdc
1200	1938	8.9	2069	9.5	—	—	—	—	—	—
1300	1965	9.1	2095	9.7	—	—	—	—	—	—
1400	1993	9.2	2121	9.8	—	—	—	—	—	—
1500	2023	9.3	2149	9.9	—	—	—	—	—	—
1600	2053	9.5	—	—	—	—	—	—	—	—
1700	2084	9.6	—	—	—	—	—	—	—	—
1800	2117	9.8	—	—	—	—	—	—	—	—
1900	2151	9.9	—	—	—	—	—	—	—	—
2000	—	—	—	—	—	—	—	—	—	—

Standard/Medium Static 1066-2170 rpm

50FEQC05 Single Phase — High Static — 4 Ton Horizontal Supply (rpm - vdc)

CFM	AVAILABLE EXTERNAL STATIC PRESSURE (in. wg)									
	0.2		0.4		0.6		0.8		1.0	
	rpm	vdc	rpm	vdc	rpm	vdc	rpm	vdc	rpm	vdc
1200	1066	4.3	1280	5.2	1473	6.0	1644	6.7	1798	7.3
1300	1120	4.6	1320	5.4	1506	6.1	1674	6.8	1826	7.4
1400	1177	4.8	1363	5.5	1541	6.3	1705	6.9	1856	7.5
1500	1236	5.0	1409	5.7	1579	6.4	1739	7.1	1886	7.7
1600	1297	5.3	1458	5.9	1620	6.6	1774	7.2	1918	7.8
1700	1359	5.5	1509	6.1	1663	6.8	1811	7.4	1952	7.9
1800	1423	5.8	1563	6.4	1708	6.9	1851	7.5	1987	8.1
1900	1487	6.0	1619	6.6	1756	7.1	1893	7.7	2025	8.2
2000	1552	6.3	1677	6.8	1806	7.3	1937	7.9	2064	8.4

CFM	AVAILABLE EXTERNAL STATIC PRESSURE (in. wg)									
	1.2		1.4		1.6		1.8		2.0	
	rpm	vdc	rpm	vdc	rpm	vdc	rpm	vdc	rpm	vdc
1200	1938	7.9	2069	8.4	2192	8.9	2309	9.4	2420	9.8
1300	1965	8.0	2095	8.5	2216	9.0	2331	9.5	2441	9.9
1400	1993	8.1	2121	8.6	2242	9.1	2356	9.6	—	—
1500	2023	8.2	2149	8.7	2269	9.2	2382	9.7	—	—
1600	2053	8.3	2178	8.9	2297	9.3	2409	9.8	—	—
1700	2084	8.5	2209	9.0	2326	9.5	2437	9.9	—	—
1800	2117	8.6	2239	9.1	2356	9.6	—	—	—	—
1900	2151	8.7	2272	9.2	2386	9.7	—	—	—	—
2000	2187	8.9	2305	9.4	2418	9.8	—	—	—	—

High Static 1066-2460 rpm

50FEQA05 Three Phase — 4 Ton Horizontal Supply (rpm - bhp)

CFM	AVAILABLE EXTERNAL STATIC PRESSURE (in. wg)									
	0.2		0.4		0.6		0.8		1.0	
	rpm	bhp	rpm	bhp	rpm	bhp	rpm	bhp	rpm	bhp
1200	1067	0.13	1280	0.22	1473	0.34	1645	0.47	1798	0.61
1300	1121	0.15	1320	0.24	1506	0.36	1675	0.49	1827	0.64
1400	1177	0.17	1363	0.26	1542	0.38	1706	0.52	1856	0.67
1500	1237	0.20	1409	0.29	1579	0.41	1739	0.55	1887	0.70
1600	1297	0.23	1458	0.32	1620	0.44	1774	0.58	1919	0.73
1700	1359	0.26	1510	0.35	1663	0.47	1811	0.61	1952	0.77
1800	1423	0.30	1563	0.39	1708	0.51	1851	0.65	1988	0.81
1900	1487	0.34	1619	0.44	1756	0.56	1893	0.70	2025	0.85
2000	1552	0.38	1677	0.48	1807	0.60	1937	0.74	2064	0.90

CFM	AVAILABLE EXTERNAL STATIC PRESSURE (in. wg)									
	1.2		1.4		1.6		1.8		2.0	
	rpm	bhp	rpm	bhp	rpm	bhp	rpm	bhp	rpm	bhp
1200	1939	0.77	2070	0.93	2192	1.11	2309	1.29	2420	1.49
1300	1965	0.79	2095	0.96	2217	1.14	2332	1.33	2442	1.52
1400	1993	0.82	2121	0.99	2242	1.17	2356	1.36	2465	1.56
1500	2022	0.86	2149	1.03	2269	1.21	2382	1.40	2490	1.60
1600	2053	0.89	2178	1.07	2297	1.25	2409	1.45	2516	1.65
1700	2085	0.93	2208	1.11	2326	1.30	2437	1.49	2543	1.69
1800	2117	0.98	2240	1.16	2356	1.34	2466	1.54	2571	1.75
1900	2152	1.02	2272	1.20	2386	1.39	2496	1.59	2600	1.80
2000	2188	1.07	2306	1.25	2418	1.45	2526	1.65	2630	1.86

Standard/Medium Static 1067-2170 rpm, 1.06 max bhp

High Static 101672660 rpm, 1.96 max bhp

50FEQA05 Three Phase — Standard/Medium Static — 4 Ton Horizontal Supply (rpm - vdc)

CFM	AVAILABLE EXTERNAL STATIC PRESSURE (in. wg)									
	0.2		0.4		0.6		0.8		1.0	
	rpm	vdc	rpm	vdc	rpm	vdc	rpm	vdc	rpm	vdc
1200	1067	4.9	1280	5.9	1473	6.8	1645	7.6	1798	8.3
1300	1121	5.2	1320	6.1	1506	6.9	1675	7.7	1827	8.4
1400	1177	5.4	1363	6.3	1542	7.1	1706	7.9	1856	8.6
1500	1237	5.7	1409	6.5	1579	7.3	1739	8.0	1887	8.7
1600	1297	6.0	1458	6.7	1620	7.5	1774	8.2	1919	8.8
1700	1359	6.3	1510	7.0	1663	7.7	1811	8.3	1952	9.0
1800	1423	6.6	1563	7.2	1708	7.9	1851	8.5	1988	9.2
1900	1487	6.9	1619	7.5	1756	8.1	1893	8.7	2025	9.3
2000	1552	7.2	1677	7.7	1807	8.3	1937	8.9	2064	9.5

CFM	AVAILABLE EXTERNAL STATIC PRESSURE (in. wg)									
	1.2		1.4		1.6		1.8		2.0	
	rpm	vdc	rpm	vdc	rpm	vdc	rpm	vdc	rpm	vdc
1200	1939	8.9	2070	9.5	—	—	—	—	—	—
1300	1965	9.1	2095	9.7	—	—	—	—	—	—
1400	1993	9.2	2121	9.8	—	—	—	—	—	—
1500	2022	9.3	2149	9.9	—	—	—	—	—	—
1600	2053	9.5	—	—	—	—	—	—	—	—
1700	2085	9.6	—	—	—	—	—	—	—	—
1800	2117	9.8	—	—	—	—	—	—	—	—
1900	2152	9.9	—	—	—	—	—	—	—	—
2000	—	—	—	—	—	—	—	—	—	—

Standard/Medium Static 1067-2170 rpm

50FEQA05 Three Phase — High Static — 4 Ton Horizontal Supply (rpm - vdc)

CFM	AVAILABLE EXTERNAL STATIC PRESSURE (in. wg)									
	0.2		0.4		0.6		0.8		1.0	
	rpm	vdc	rpm	vdc	rpm	vdc	rpm	vdc	rpm	vdc
1200	1067	4.0	1280	4.8	1473	5.5	1645	6.2	1798	6.8
1300	1121	4.2	1320	5.0	1506	5.7	1675	6.3	1827	6.9
1400	1177	4.4	1363	5.1	1542	5.8	1706	6.4	1856	7.0
1500	1237	4.7	1409	5.3	1579	5.9	1739	6.5	1887	7.1
1600	1297	4.9	1458	5.5	1620	6.1	1774	6.7	1919	7.2
1700	1359	5.1	1510	5.7	1663	6.3	1811	6.8	1952	7.3
1800	1423	5.3	1563	5.9	1708	6.4	1851	7.0	1988	7.5
1900	1487	5.6	1619	6.1	1756	6.6	1893	7.1	2025	7.6
2000	1552	5.8	1677	6.3	1807	6.8	1937	7.3	2064	7.8

CFM	AVAILABLE EXTERNAL STATIC PRESSURE (in. wg)									
	1.2		1.4		1.6		1.8		2.0	
	rpm	vdc	rpm	vdc	rpm	vdc	rpm	vdc	rpm	vdc
1200	1939	7.3	2070	7.8	2192	8.2	2309	8.7	2420	9.1
1300	1965	7.4	2095	7.9	2217	8.3	2332	8.8	2442	9.2
1400	1993	7.5	2121	8.0	2242	8.4	2356	8.9	2465	9.3
1500	2022	7.6	2149	8.1	2269	8.5	2382	9.0	2490	9.4
1600	2053	7.7	2178	8.2	2297	8.6	2409	9.1	2516	9.5
1700	2085	7.8	2208	8.3	2326	8.7	2437	9.2	2543	9.6
1800	2117	8.0	2240	8.4	2356	8.9	2466	9.3	2571	9.7
1900	2152	8.1	2272	8.5	2386	9.0	2496	9.4	2600	9.8
2000	2188	8.2	2306	8.7	2418	9.1	2526	9.5	2630	9.9

High Static 1067-2660 rpm

50FEQA06 Single Phase — 5 Ton Horizontal Supply (rpm - bhp)

CFM	AVAILABLE EXTERNAL STATIC PRESSURE (in. wg)									
	0.2		0.4		0.6		0.8		1.0	
	rpm	bhp	rpm	bhp	rpm	bhp	rpm	bhp	rpm	bhp
1500	1197	0.18	1360	0.26	1525	0.37	1679	0.49	1822	0.62
1625	1271	0.21	1421	0.29	1574	0.40	1721	0.52	1860	0.66
1750	1348	0.25	1485	0.33	1627	0.44	1767	0.56	1901	0.70
1875	1425	0.29	1553	0.38	1684	0.49	1817	0.61	1945	0.75
2000	1504	0.35	1623	0.43	1745	0.54	1870	0.66	1992	0.80
2125	1585	0.40	1695	0.49	1809	0.60	1926	0.72	2043	0.86
2250	1666	0.47	1769	0.56	1876	0.67	1986	0.79	2096	0.93
2375	1747	0.54	1844	0.63	1945	0.74	2049	0.87	2153	1.01
2500	1830	0.62	1921	0.71	2016	0.82	2114	0.95	2213	1.09

CFM	AVAILABLE EXTERNAL STATIC PRESSURE (in. wg)									
	1.2		1.4		1.6		1.8		2.0	
	rpm	bhp	rpm	bhp	rpm	bhp	rpm	bhp	rpm	bhp
1500	1954	0.77	2078	0.92	2194	1.09	2304	1.26	2408	1.44
1625	1990	0.81	2112	0.97	2227	1.13	2336	1.31	2439	1.49
1750	2028	0.85	2148	1.01	2262	1.18	2370	1.36	2472	1.54
1875	2069	0.90	2186	1.06	2298	1.23	2404	1.41	2506	1.60
2000	2111	0.95	2226	1.12	2336	1.29	2441	1.48	2541	1.66
2125	2157	1.02	2268	1.18	2375	1.36	2478	1.54	2578	1.73
2250	2206	1.08	2313	1.25	2417	1.43	2518	1.61	2616	1.81
2375	2258	1.16	2361	1.33	2461	1.50	2560	1.69	2655	1.89
2500	2312	1.24	2411	1.41	2508	1.59	2604	1.78	—	—

Standard/Medium Static 1197-2390 rpm, 1.44 max bhp

High Static 1197-2660 rpm, 1.96 max bhp

50FEQA06 Single Phase — Standard/Medium Static — 5 Ton Horizontal Supply (rpm - vdc)

CFM	AVAILABLE EXTERNAL STATIC PRESSURE (in. wg)									
	0.2		0.4		0.6		0.8		1.0	
	rpm	vdc	rpm	vdc	rpm	vdc	rpm	vdc	rpm	vdc
1500	1197	5.0	1360	5.7	1525	6.4	1679	7.0	1822	7.6
1625	1271	5.3	1421	5.9	1574	6.6	1721	7.2	1860	7.8
1750	1348	5.6	1485	6.2	1627	6.8	1767	7.4	1901	8.0
1875	1425	6.0	1553	6.5	1684	7.0	1817	7.6	1945	8.1
2000	1504	6.3	1623	6.8	1745	7.3	1870	7.8	1992	8.3
2125	1585	6.6	1695	7.1	1809	7.6	1926	8.1	2043	8.5
2250	1666	7.0	1769	7.4	1876	7.8	1986	8.3	2096	8.8
2375	1747	7.3	1844	7.7	1945	8.1	2049	8.6	2153	9.0
2500	1830	7.7	1921	8.0	2016	8.4	2114	8.8	2213	9.3

CFM	AVAILABLE EXTERNAL STATIC PRESSURE (in. wg)									
	1.2		1.4		1.6		1.8		2.0	
	rpm	vdc	rpm	vdc	rpm	vdc	rpm	vdc	rpm	vdc
1500	1954	8.2	2078	8.7	2194	9.2	2304	9.6	—	—
1625	1990	8.3	2112	8.8	2227	9.3	2336	9.8	—	—
1750	2028	8.5	2148	9.0	2262	9.5	2370	9.9	—	—
1875	2069	8.7	2186	9.1	2298	9.6	—	—	—	—
2000	2111	8.8	2226	9.3	2336	9.8	—	—	—	—
2125	2157	9.0	2268	9.5	2375	9.9	—	—	—	—
2250	2206	9.2	2313	9.7	—	—	—	—	—	—
2375	2258	9.4	2361	9.9	—	—	—	—	—	—
2500	2312	9.7	—	—	—	—	—	—	—	—

Standard/Medium Static 1197-2390 rpm

50FEQA06 Single Phase — High Static — 5 Ton Horizontal Supply (rpm - vdc)

CFM	AVAILABLE EXTERNAL STATIC PRESSURE (in. wg)									
	0.2		0.4		0.6		0.8		1.0	
	rpm	vdc	rpm	vdc	rpm	vdc	rpm	vdc	rpm	vdc
1500	1197	4.5	1360	5.1	1525	5.7	1679	6.3	1822	6.8
1625	1271	4.8	1421	5.3	1574	5.9	1721	6.5	1860	7.0
1750	1348	5.1	1485	5.6	1627	6.1	1767	6.6	1901	7.1
1875	1425	5.4	1553	5.8	1684	6.3	1817	6.8	1945	7.3
2000	1504	5.7	1623	6.1	1745	6.6	1870	7.0	1992	7.5
2125	1585	6.0	1695	6.4	1809	6.8	1926	7.2	2043	7.7
2250	1666	6.3	1769	6.7	1876	7.1	1986	7.5	2096	7.9
2375	1747	6.6	1844	6.9	1945	7.3	2049	7.7	2153	8.1
2500	1830	6.9	1921	7.2	2016	7.6	2114	7.9	2213	8.3

CFM	AVAILABLE EXTERNAL STATIC PRESSURE (in. wg)									
	1.2		1.4		1.6		1.8		2.0	
	rpm	vdc	rpm	vdc	rpm	vdc	rpm	vdc	rpm	vdc
1500	1954	7.3	2078	7.8	2194	8.2	2304	8.7	2408	9.1
1625	1990	7.5	2112	7.9	2227	8.4	2336	8.8	2439	9.2
1750	2028	7.6	2148	8.1	2262	8.5	2370	8.9	2472	9.3
1875	2069	7.8	2186	8.2	2298	8.6	2404	9.0	2506	9.4
2000	2111	7.9	2226	8.4	2336	8.8	2441	9.2	2541	9.6
2125	2157	8.1	2268	8.5	2375	8.9	2478	9.3	2578	9.7
2250	2206	8.3	2313	8.7	2417	9.1	2518	9.5	2616	9.8
2375	2258	8.5	2361	8.9	2461	9.3	2560	9.6	2655	10.0
2500	2312	8.7	2411	9.1	2508	9.4	2604	9.8	—	—

High Static 1197-2660 rpm

50FEQA06 Three Phase — 5 Ton Horizontal Supply (rpm - bhp)

CFM	AVAILABLE EXTERNAL STATIC PRESSURE (in. wg)									
	0.2		0.4		0.6		0.8		1.0	
	rpm	bhp	rpm	bhp	rpm	bhp	rpm	bhp	rpm	bhp
1500	1196	0.18	1360	0.26	1525	0.37	1679	0.49	1822	0.62
1625	1271	0.21	1421	0.29	1574	0.40	1721	0.52	1860	0.66
1750	1348	0.25	1485	0.33	1627	0.44	1767	0.56	1901	0.70
1875	1425	0.29	1553	0.38	1684	0.49	1817	0.61	1945	0.75
2000	1504	0.35	1622	0.43	1745	0.54	1870	0.66	1993	0.80
2125	1585	0.40	1695	0.49	1809	0.60	1926	0.72	2043	0.86
2250	1666	0.47	1769	0.56	1876	0.67	1986	0.79	2096	0.93
2375	1747	0.54	1844	0.63	1945	0.74	2049	0.87	2153	1.01
2500	1829	0.62	1921	0.71	2016	0.82	2114	0.95	2213	1.09

CFM	AVAILABLE EXTERNAL STATIC PRESSURE (in. wg)									
	1.2		1.4		1.6		1.8		2.0	
	rpm	bhp	rpm	bhp	rpm	bhp	rpm	bhp	rpm	bhp
1500	1954	0.77	2078	0.92	2194	1.09	2304	1.26	2408	1.44
1625	1990	0.81	2112	0.97	2227	1.13	2336	1.31	2439	1.49
1750	2028	0.85	2148	1.01	2262	1.18	2370	1.36	2472	1.54
1875	2069	0.90	2186	1.06	2298	1.23	2404	1.41	2506	1.60
2000	2112	0.96	2226	1.12	2336	1.29	2441	1.48	2541	1.66
2125	2157	1.02	2268	1.18	2376	1.36	2479	1.54	2578	1.73
2250	2206	1.08	2313	1.25	2418	1.43	2518	1.61	2616	1.81
2375	2258	1.16	2361	1.33	2462	1.50	2560	1.69	2656	1.89
2500	2312	1.24	2411	1.41	2508	1.59	2604	1.78	2698	1.97

Standard/Medium Static 1196-2390 rpm, 1.44 max bhp

High Static 1196-2836 rpm, 2.43 max bhp

50FEQA06 Three Phase — Standard/Medium Static — 5 Ton Horizontal Supply (rpm - vdc)

CFM	AVAILABLE EXTERNAL STATIC PRESSURE (in. wg)									
	0.2		0.4		0.6		0.8		1.0	
	rpm	vdc	rpm	vdc	rpm	vdc	rpm	vdc	rpm	vdc
1500	1196	5.0	1360	5.7	1525	6.4	1679	7.0	1822	7.6
1625	1271	5.3	1421	5.9	1574	6.6	1721	7.2	1860	7.8
1750	1348	5.6	1485	6.2	1627	6.8	1767	7.4	1901	8.0
1875	1425	6.0	1553	6.5	1684	7.0	1817	7.6	1945	8.1
2000	1504	6.3	1622	6.8	1745	7.3	1870	7.8	1993	8.3
2125	1585	6.6	1695	7.1	1809	7.6	1926	8.1	2043	8.5
2250	1666	7.0	1769	7.4	1876	7.8	1986	8.3	2096	8.8
2375	1747	7.3	1844	7.7	1945	8.1	2049	8.6	2153	9.0
2500	1829	7.7	1921	8.0	2016	8.4	2114	8.8	2213	9.3

CFM	AVAILABLE EXTERNAL STATIC PRESSURE (in. wg)									
	1.2		1.4		1.6		1.8		2.0	
	rpm	vdc	rpm	vdc	rpm	vdc	rpm	vdc	rpm	vdc
1500	1954	8.2	2078	8.7	2194	9.2	2304	9.6	—	—
1625	1990	8.3	2112	8.8	2227	9.3	2336	9.8	—	—
1750	2028	8.5	2148	9.0	2262	9.5	2370	9.9	—	—
1875	2069	8.7	2186	9.1	2298	9.6	—	—	—	—
2000	2112	8.8	2226	9.3	2336	9.8	—	—	—	—
2125	2157	9.0	2268	9.5	2376	9.9	—	—	—	—
2250	2206	9.2	2313	9.7	—	—	—	—	—	—
2375	2258	9.4	2361	9.9	—	—	—	—	—	—
2500	2312	9.7	—	—	—	—	—	—	—	—

Standard/Medium Static 1196-2390 rpm

50FEQA06 Three Phase — High Static — 5 Ton Horizontal Supply (rpm - vdc)

CFM	AVAILABLE EXTERNAL STATIC PRESSURE (in. wg)									
	0.2		0.4		0.6		0.8		1.0	
	rpm	vdc	rpm	vdc	rpm	vdc	rpm	vdc	rpm	vdc
1500	1196	4.2	1360	4.8	1525	5.4	1679	5.9	1822	6.4
1625	1271	4.5	1421	5.0	1574	5.6	1721	6.1	1860	6.6
1750	1348	4.8	1485	5.2	1627	5.7	1767	6.2	1901	6.7
1875	1425	5.0	1553	5.5	1684	5.9	1817	6.4	1945	6.9
2000	1504	5.3	1622	5.7	1745	6.2	1870	6.6	1993	7.0
2125	1585	5.6	1695	6.0	1809	6.4	1926	6.8	2043	7.2
2250	1666	5.9	1769	6.2	1876	6.6	1986	7.0	2096	7.4
2375	1747	6.2	1844	6.5	1945	6.9	2049	7.2	2153	7.6
2500	1829	6.4	1921	6.8	2016	7.1	2114	7.5	2213	7.8

CFM	AVAILABLE EXTERNAL STATIC PRESSURE (in. wg)									
	1.2		1.4		1.6		1.8		2.0	
	rpm	vdc	rpm	vdc	rpm	vdc	rpm	vdc	rpm	vdc
1500	1954	6.9	2078	7.3	2194	7.7	2304	8.1	2408	8.5
1625	1990	7.0	2112	7.4	2227	7.9	2336	8.2	2439	8.6
1750	2028	7.2	2148	7.6	2262	8.0	2370	8.4	2472	8.7
1875	2069	7.3	2186	7.7	2298	8.1	2404	8.5	2506	8.8
2000	2112	7.4	2226	7.8	2336	8.2	2441	8.6	2541	9.0
2125	2157	7.6	2268	8.0	2376	8.4	2479	8.7	2578	9.1
2250	2206	7.8	2313	8.2	2418	8.5	2518	8.9	2616	9.2
2375	2258	8.0	2361	8.3	2462	8.7	2560	9.0	2656	9.4
2500	2312	8.2	2411	8.5	2508	8.8	2604	9.2	2698	9.5

High Static 1196-2836 rpm

50FEQM07 Three Phase — 6 Ton Horizontal Supply (rpm - bhp)

CFM	AVAILABLE EXTERNAL STATIC PRESSURE (in. wg)									
	0.2		0.4		0.6		0.8		1.0	
	rpm	bhp	rpm	bhp	rpm	bhp	rpm	bhp	rpm	bhp
1800	1378	0.27	1512	0.35	1649	0.46	1786	0.58	1918	0.72
1950	1473	0.32	1594	0.41	1721	0.52	1848	0.64	1973	0.78
2100	1569	0.39	1680	0.48	1796	0.59	1915	0.71	2032	0.85
2250	1666	0.47	1769	0.56	1876	0.67	1986	0.79	2096	0.93
2400	1764	0.55	1860	0.65	1959	0.76	2061	0.88	2165	1.02
2550	1863	0.65	1952	0.75	2045	0.86	2140	0.99	2237	1.13
2700	1962	0.76	2046	0.86	2133	0.97	2222	1.10	2313	1.24
2850	2062	0.88	2141	0.98	2223	1.10	2307	1.23	2392	1.37
3000	2163	1.01	2238	1.12	2315	1.24	2394	1.37	2474	1.52

CFM	AVAILABLE EXTERNAL STATIC PRESSURE (in. wg)									
	1.2		1.4		1.6		1.8		2.0	
	rpm	bhp	rpm	bhp	rpm	bhp	rpm	bhp	rpm	bhp
1800	2044	0.87	2163	1.03	2276	1.20	2383	1.38	2486	1.57
1950	2094	0.93	2210	1.10	2320	1.27	2426	1.45	2527	1.64
2100	2148	1.00	2259	1.17	2367	1.34	2471	1.53	2570	1.72
2250	2206	1.08	2313	1.25	2417	1.43	2518	1.61	2616	1.81
2400	2268	1.18	2370	1.34	2471	1.52	2568	1.71	2664	1.90
2550	2335	1.28	2432	1.45	2528	1.62	2622	1.81	2714	2.01
2700	2405	1.40	2497	1.56	2589	1.74	2679	1.93	2768	2.13
2850	2479	1.53	2566	1.69	2653	1.87	2740	2.06	2826	2.26
3000	2556	1.67	2639	1.84	2722	2.02	2804	2.21	—	—

Standard/Medium Static 1378-2530 rpm, 1.76 max bhp

High Static 1378-2836 rpm, 2.43 max bhp

50FEQM07 Three Phase — Standard/Medium Static — 6 Ton Horizontal Supply (rpm - vdc)

CFM	AVAILABLE EXTERNAL STATIC PRESSURE (in. wg)									
	0.2		0.4		0.6		0.8		1.0	
	rpm	vdc	rpm	vdc	rpm	vdc	rpm	vdc	rpm	vdc
1800	1378	5.4	1512	6.0	1649	6.5	1786	7.1	1918	7.6
1950	1473	5.8	1594	6.3	1721	6.8	1848	7.3	1973	7.8
2100	1569	6.2	1680	6.6	1796	7.1	1915	7.6	2032	8.0
2250	1666	6.6	1769	7.0	1876	7.4	1986	7.8	2096	8.3
2400	1764	7.0	1860	7.4	1959	7.7	2061	8.1	2165	8.6
2550	1863	7.4	1952	7.7	2045	8.1	2140	8.5	2237	8.8
2700	1962	7.8	2046	8.1	2133	8.4	2222	8.8	2313	9.1
2850	2062	8.2	2141	8.5	2223	8.8	2307	9.1	2392	9.5
3000	2163	8.5	2238	8.8	2315	9.2	2394	9.5	2474	9.8

CFM	AVAILABLE EXTERNAL STATIC PRESSURE (in. wg)									
	1.2		1.4		1.6		1.8		2.0	
	rpm	vdc	rpm	vdc	rpm	vdc	rpm	vdc	rpm	vdc
1800	2044	8.1	2163	8.5	2276	9.0	2383	9.4	2486	9.8
1950	2094	8.3	2210	8.7	2320	9.2	2426	9.6	2527	10.0
2100	2148	8.5	2259	8.9	2367	9.4	2471	9.8	—	—
2250	2206	8.7	2313	9.1	2417	9.6	2518	10.0	—	—
2400	2268	9.0	2370	9.4	2471	9.8	—	—	—	—
2550	2335	9.2	2432	9.6	2528	10.0	—	—	—	—
2700	2405	9.5	2497	9.9	—	—	—	—	—	—
2850	2479	9.8	—	—	—	—	—	—	—	—
3000	—	—	—	—	—	—	—	—	—	—

Standard/Medium Static 1378-2530 rpm

50FEQM07 Three Phase — High Static — 6 Ton Horizontal Supply (rpm - vdc)

CFM	AVAILABLE EXTERNAL STATIC PRESSURE (in. wg)									
	0.2		0.4		0.6		0.8		1.0	
	rpm	vdc	rpm	vdc	rpm	vdc	rpm	vdc	rpm	vdc
1800	1378	4.9	1512	5.3	1649	5.8	1786	6.3	1918	6.8
1950	1473	5.2	1594	5.6	1721	6.1	1848	6.5	1973	7.0
2100	1569	5.5	1680	5.9	1796	6.3	1915	6.8	2032	7.2
2250	1666	5.9	1769	6.2	1876	6.6	1986	7.0	2096	7.4
2400	1764	6.2	1860	6.6	1959	6.9	2061	7.3	2165	7.6
2550	1863	6.6	1952	6.9	2045	7.2	2140	7.5	2237	7.9
2700	1962	6.9	2046	7.2	2133	7.5	2222	7.8	2313	8.2
2850	2062	7.3	2141	7.5	2223	7.8	2307	8.1	2392	8.4
3000	2163	7.6	2238	7.9	2315	8.2	2394	8.4	2474	8.7

CFM	AVAILABLE EXTERNAL STATIC PRESSURE (in. wg)									
	1.2		1.4		1.6		1.8		2.0	
	rpm	vdc	rpm	vdc	rpm	vdc	rpm	vdc	rpm	vdc
1800	2044	7.2	2163	7.6	2276	8.0	2383	8.4	2486	8.8
1950	2094	7.4	2210	7.8	2320	8.2	2426	8.6	2527	8.9
2100	2148	7.6	2259	8.0	2367	8.3	2471	8.7	2570	9.1
2250	2206	7.8	2313	8.2	2417	8.5	2518	8.9	2616	9.2
2400	2268	8.0	2370	8.4	2471	8.7	2568	9.1	2664	9.4
2550	2335	8.2	2432	8.6	2528	8.9	2622	9.2	2714	9.6
2700	2405	8.5	2497	8.8	2589	9.1	2679	9.4	2768	9.8
2850	2479	8.7	2566	9.0	2653	9.4	2740	9.7	2826	10.0
3000	2556	9.0	2639	9.3	2722	9.6	2804	9.9	—	—

High Static 1378-2836 rpm

APPENDIX D — WIRING DIAGRAMS

50FEQ*04-07 — Wiring Diagrams — Standard SCCR

UNIT	VOLTAGE	CONTROL	PAGE	POWER	PAGE
50FEQ*04-06 Electromechanical with POL224 Controller	208/230-1-60	48TC006471	103	48TC003163	107
	208/230-3-60			48TC003162	108
	460-3-60			48TC003164	109
	575-3-60				
50FEQ*07 Electromechanical with POL224 Controller	208/230-3-60	48TC006470	104	48TC003162	108
	460-3-60			48TC003164	109
	575-3-60				
50FEQ*04-06 with SystemVu Controller	208/230-1-60	48TC006501	105	48TC003211	110
	208/230-3-60			48TC003212	111
	460-3-60			48TC003213	112
	575-3-60				
50FEQ*07 with SystemVu Controller	208/230-3-60	48TC006499	106	48TC003212	111
	460-3-60			48TC003213	112
	575-3-60				

50FEQ*04-07 — Wiring Diagrams — High SCCR

UNIT	VOLTAGE	CONTROL	PAGE	POWER	PAGE
50FEQ*04-06 Electromechanical with POL224 Controller	208/230-1-60	48TC006471	103	48TC004596	113
	208/230-3-60			48TC004488	114
	460-3-60			48TC004489	115
50FEQ*07 Electromechanical with POL224 Controller	208/230-3-60	48TC006470	104	48TC004488	114
	460-3-60			48TC004489	115
50FEQ*04-06 with SystemVu Controller	208/230-1-60	48TC006501	105	48TC004601	116
	208/230-3-60			48TC004495	117
	460-3-60			48TC004496	118
50FEQ*07 with SystemVu Controller	208/230-3-60	48TC006499	106	48TC004495	117
	460-3-60			48TC004496	118

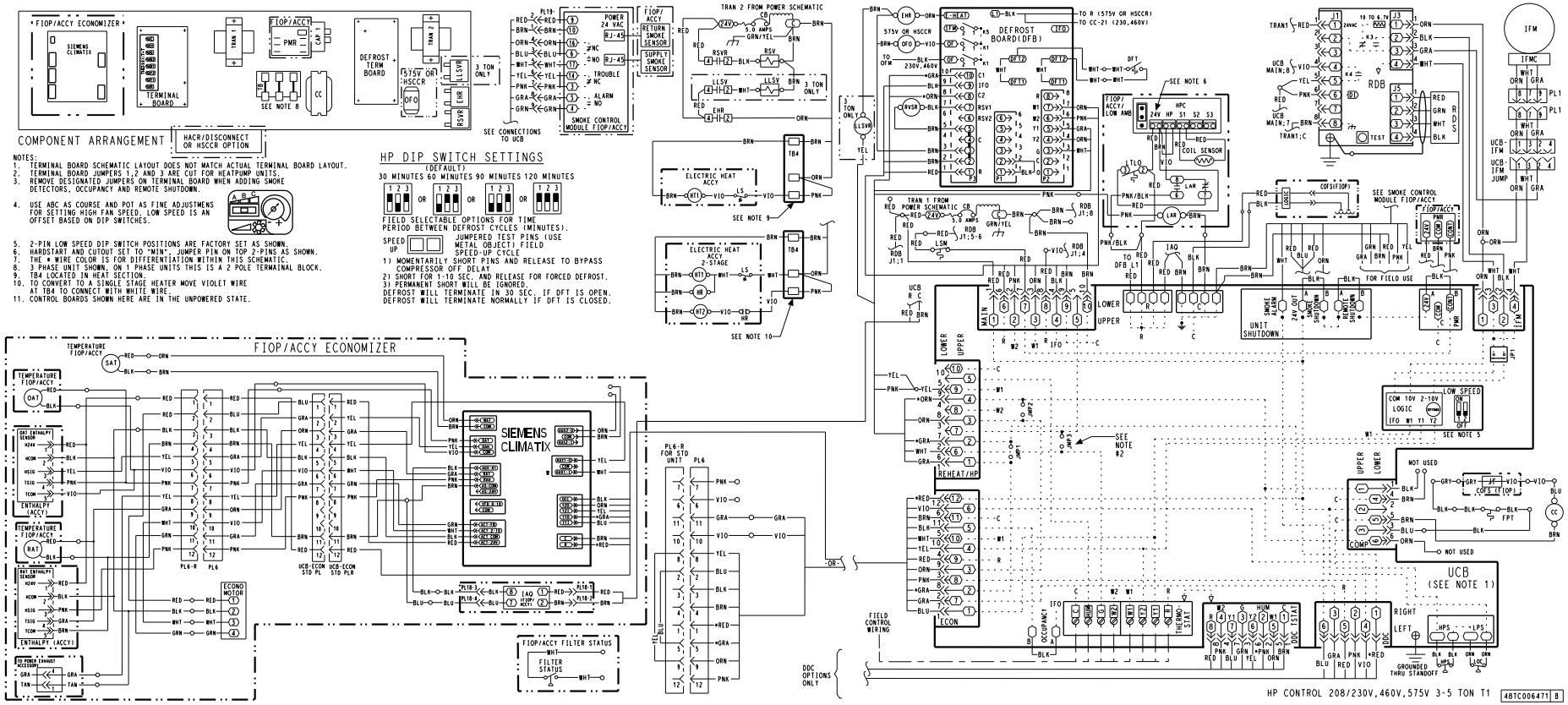

Fig. B — 50FEQ*04-06 Electromechanical Control Wiring Diagram with POL224 Controller

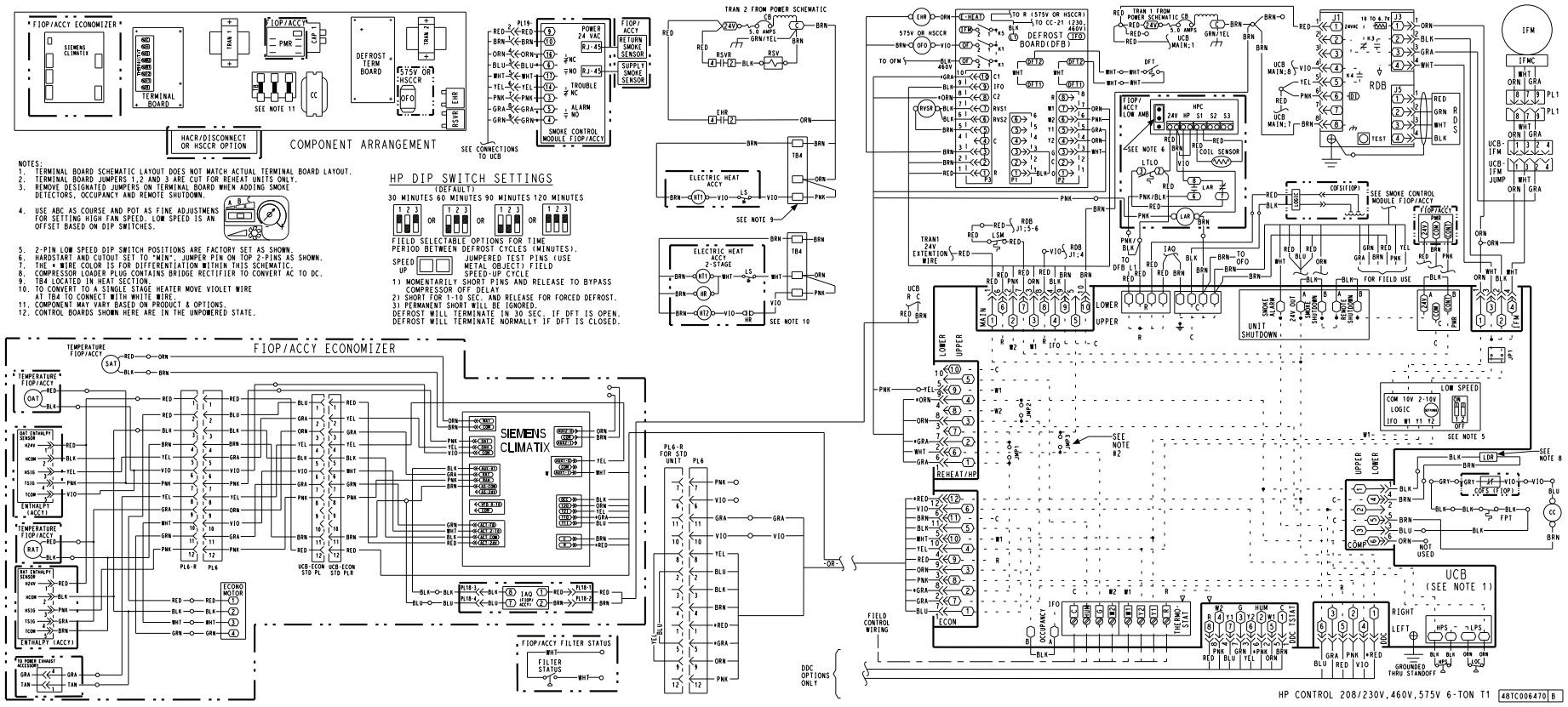

Fig. C — 50FEQ*07 Electromechanical Control Wiring Diagram with POL224 Controller

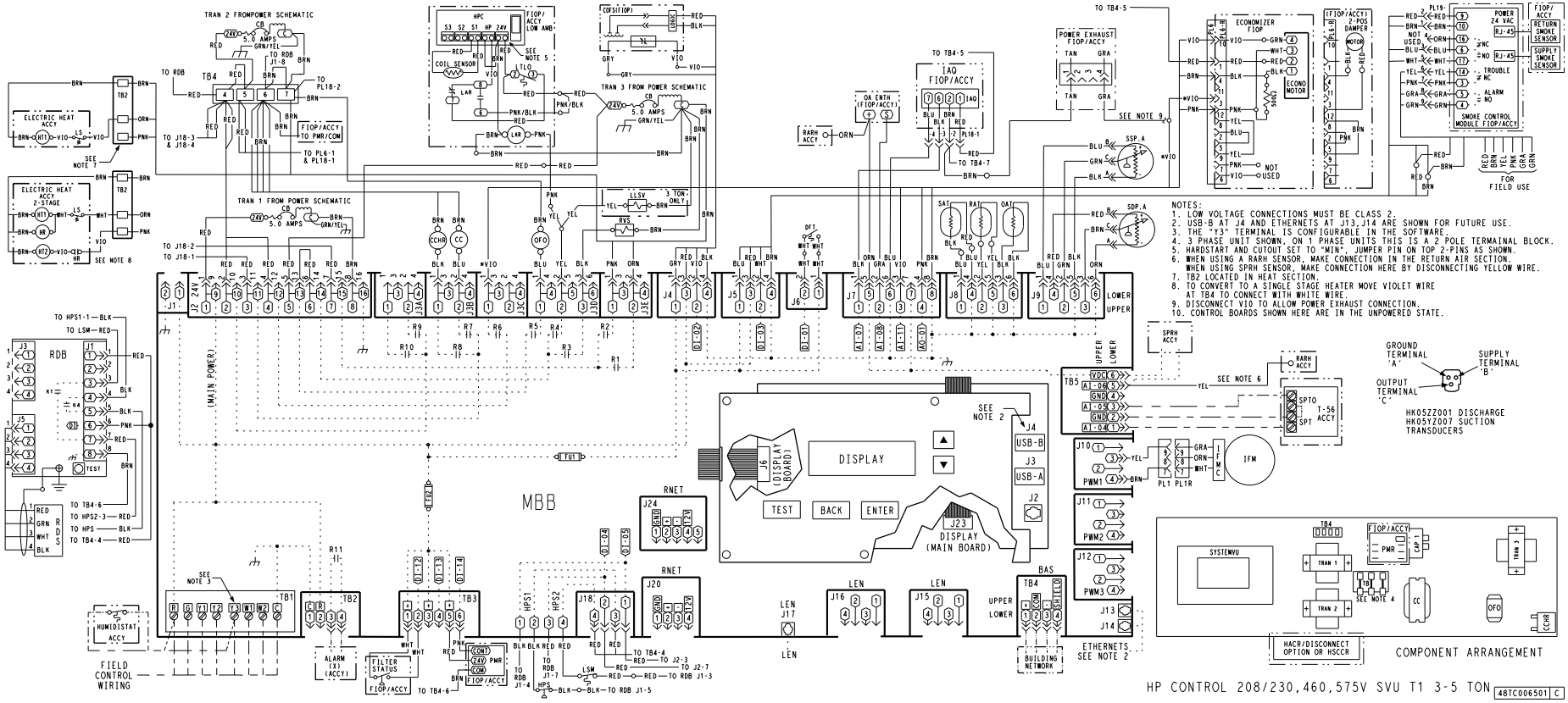

Fig. D — 50FEQ*04-06 Control Wiring Diagram with SystemVu Controller

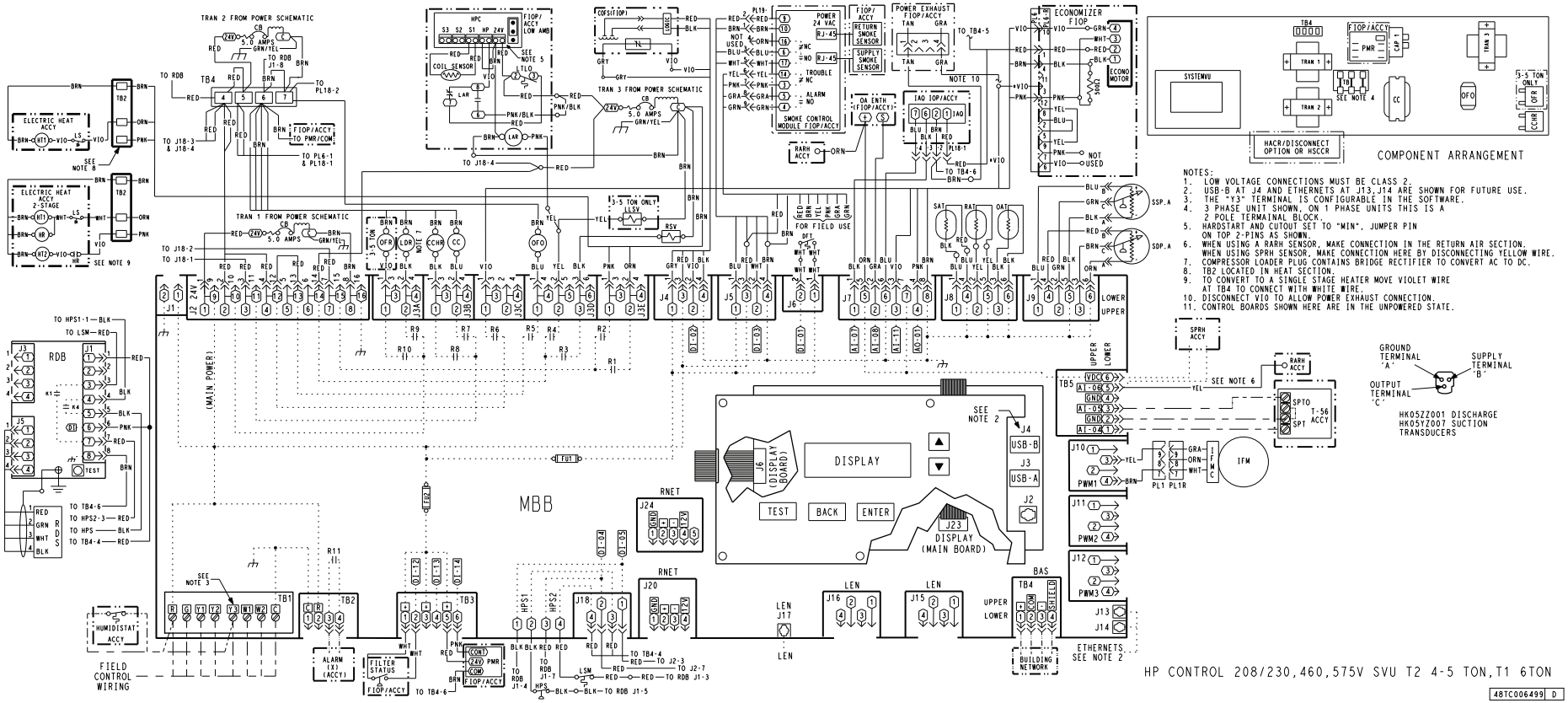

Fig. E — 50FEQ*07 Control Wiring Diagram with SystemVu Controller

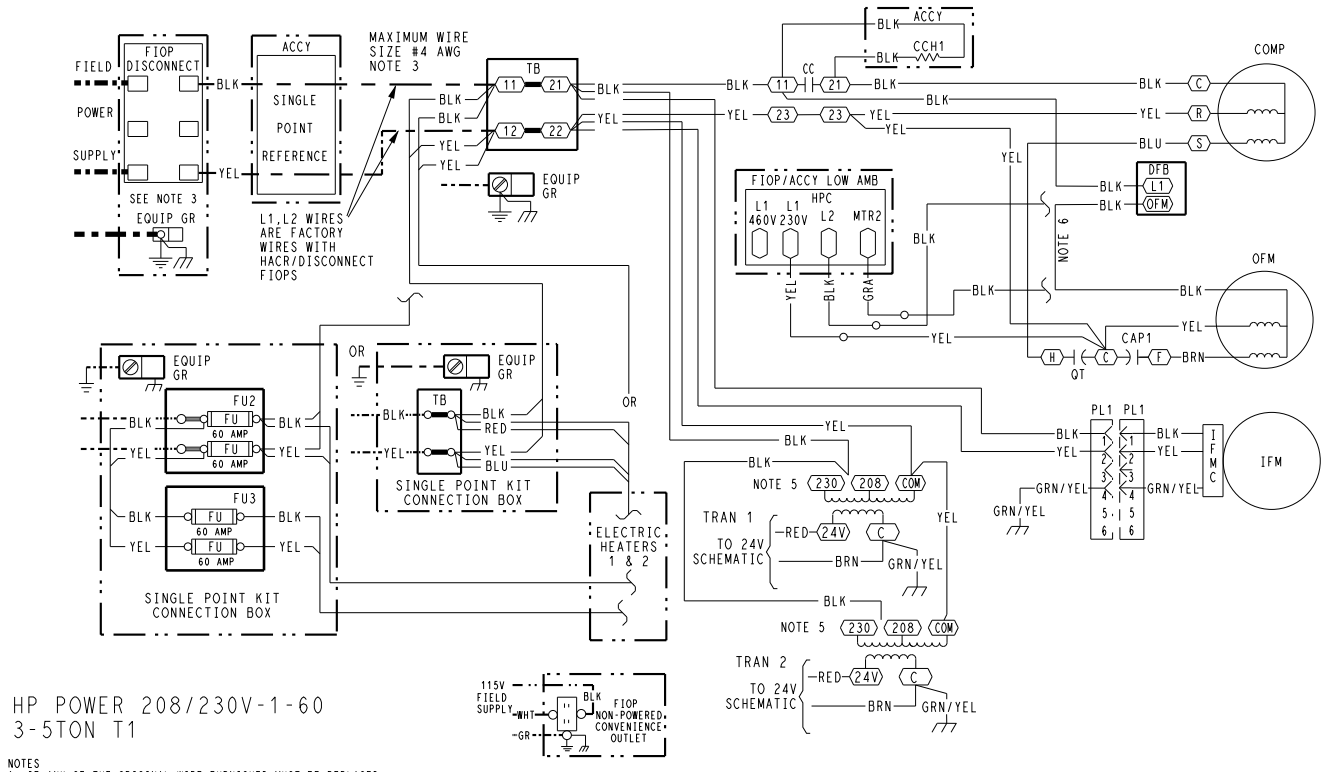

HP POWER 208/230V-1-60
3-5TON T1

NOTES
1. IF ANY OF THE ORIGINAL WIRE FURNISHED MUST BE REPLACED. IT MUST BE REPLACED WITH TYPE 90° C WIRE OR ITS EQUIVALENT.
2. COMPRESSOR AND FAN MOTORS ARE THERMALLY PROTECTED.
3. USE COPPER CONDUCTOR ONLY.
4. DO NOT DISCONNECT POWER PLUG OR SIGNAL WIRE WHILE UNDER LOAD.
5. ON 208/230V UNITS, TRAN IS WIRED FOR 230V. IF UNIT IS TO BE RUN WITH 208V POWER SUPPLY, DISCONNECT BLK WIRE FROM 230V TAP AND CONNECT TO 208V TAP.
6. THIS WIRE NOT USED WITH LOW AMBIENT FIOP/ACCY.

LEGEND

- MARKED WIRE
- TERMINAL (MARKED)
- TERMINAL (UNMARKED)
- TERMINAL BLOCK
- SPLICE
- SPLICE (MARKED)
- FACTORY WIRING
- FIELD CONTROL WIRING
- FIELD POWER WIRING
- CIRCUIT BOARD TRACE
- ACCESSORY OR OPTIONAL WIRING

ACCY	ACCESSORY
AWG	AMERICAN WIRE GAGE
BAS	BUILDING AUTOMATION NETWORK
CC	CONTACTOR,COMPRESSOR
C	COMMON
CAP	CAPACITOR
CB	CIRCUIT BREAKER
CCH	CRANKCASE HEATER
CCHR	CRANKCASE HEATER RELAY
CCHTS	CRANKCASE HEATER TEMP SWITCH
CLO	COMPRESSOR LOCKOUT
CLV	COOLING LIQUID VALVE
COFS	CONDENSATE OVERFLOW SWITCH
COM	SIGNAL COMMON
COMP	COMPRESSOR MOTOR
DDC	DIRECT DIGITAL CONTROL
DFB	DEFROST BOARD
DFT	DEFROST THERMOSTAT
EHR	ELECTRIC HEAT RELAY
ENTH	ENTHALPY
ERV	ENERGY RECOVERY VENTILATOR
ESL	ENTHALPY SENSOR - LOW
FB	FUSE BLOCK
FIOP	FACTORY INSTALLED OPTION
FPT	FREEZE PROTECTION THERMOSTAT
FST	FAN HOUSING TEMP SENSOR
FU	FUSE
G	THERMOSTAT FAN CALL
GR(GND)	GROUND
HACR	HEATING, AIR-CONDITIONING, REFRIGERATION BREAKER
HR	HEATER RELAY
HGRH	HOT GAS REHEAT
HPC	HEAD PRESSURE CONTROL
HPS	HIGH PRESSURE SWITCH
HUM	HUMIDISTAT
IAQ	INDOOR AIR QUALITY SENSORS
IFM	INDOOR FAN MOTOR
IFMC	INDOOR FAN MOTOR CONTROL
IFO	INDOOR FAN ON SIGNAL
IRH	INDOOR RELATIVE HUMIDITY
JMP	JUMPER
L1	LINE 1
LA	LOW AMBIENT LOCKOUT
LAR	LOW AMBIENT RELAY
LAS	LOW AMBIENT SWITCH
LDR	COMPRESSOR LOADER
LEN	LOCAL EQUIPMENT NETWORK
LOC	LOSS OF CHARGE
LPS	LOW PRESSURE SWITCH
LS	LIMIT SWITCH
LSM	LIMIT SWITCH (MANUAL RESET)
LTLO	LOW TEMP LOCKOUT
MTR	MOTOR
OAQ	OUTDOOR AIR QUALITY
OAT	OUTDOOR AIR TEMP. SEN
OFM	OUTDOOR FAN MOTOR
OFR	OUTDOOR FAN RELAY
OL	OVERLOAD
PER	POWER EXHAUST RELAY
PH	PHASE
PL	PLUG ASSEMBLY
POT	POTENTIOMETER
PMR	PHASE MONITOR RELAY
PS	PRESSURE SWITCH
PWM	PULSE WIDTH MODULATION
QT	QUADRUPLE TERMINAL
R	THERMOSTAT POWER
RAT	RETURN AIR TEMP. SEN
RDB	REFRIGERANT DISSIPATION BOARD
RDS	REFRIGERANT DISSIPATION SENSOR
RDV	REHEAT DISCHARGE VALVE
RH	RELATIVE HUMIDITY
RLV	REHEAT LIQUID VALVE
RNET	LOCAL ACCESS NETWORK
RVS	REVERSING VALVE SOLENOID
SAT	SUPPLY AIR TEMP SENSOR
SDP	SYSTEM DISCHARGE PRESSURE
SPRH	SPACE RELATIVE HUMIDITY
SPT	SPACE TEMPERATURE SENSOR
SPTO	SPACE TEMPERATURE OFFSET
SSP	SYSTEM SUCTION PRESSURE
SW	SWITCH
TB	TERMINAL BLOCK
TDR	TIME DELAY RELAY
TRAN	TRANSFORMER
UCB	UNIT CONTROL BOARD
W1	1st STAGE OF HEATING CALL
W2	2nd STAGE OF HEATING CALL
Y1	1st STAGE OF COOLING CALL
Y2	2nd STAGE OF COOLING CALL

48TC003163 | C

Fig. F — 50FEQ*04-06 Power Wiring Diagram — 208/230-1-60

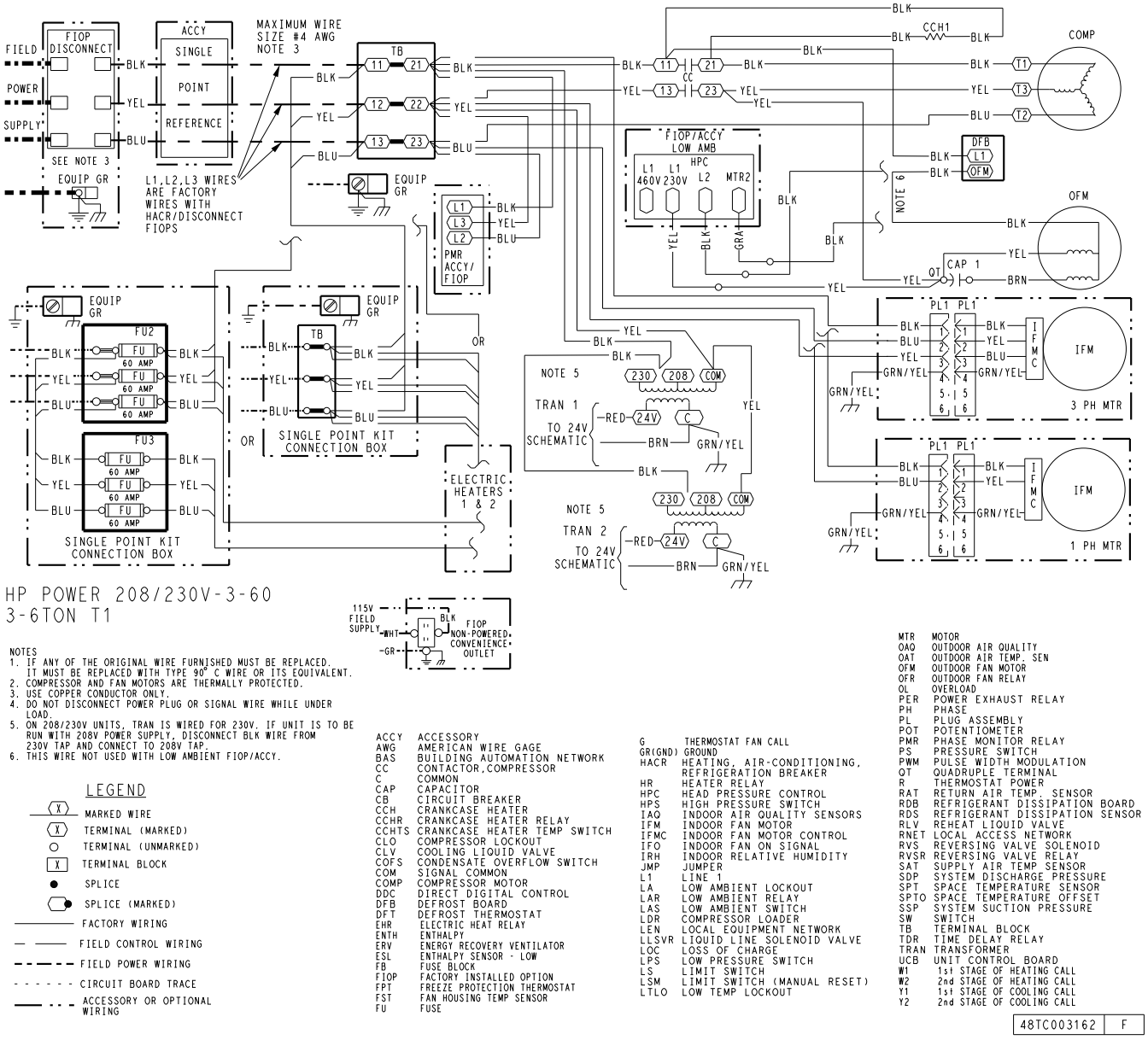

NOTES
1. IF ANY OF THE ORIGINAL WIRE FURNJSHED MUST BE REPLACED. IT MUST BE REPLACED WITH TYPE 90° C WIRE OR ITS EQUIVALENT.
2. COMPRESSOR AND FAN MOTORS ARE THERMALLY PROTECTED.
3. USE COPPER CONDUCTOR ONLY.
4. DO NOT DISCONNECT POWER PLUG OR SIGNAL WIRE WHILE UNDER LOAD.
5. ON 208/230V UNITS, TRAN IS WIRED FOR 230V. IF UNIT IS TO BE RUN WITH 208V POWER SUPPLY, DISCONNECT BLK WIRE FROM 230V TAP AND CONNECT TO 208V TAP.
6. THIS WIRE NOT USED WITH LOW AMBIENT FIOP/ACCY.

LEGEND

(X)	MARKED WIRE
(X)	TERMINAL (MARKED)
○	TERMINAL (UNMARKED)
[X]	TERMINAL BLOCK
●	SPLICE
(●)	SPLICE (MARKED)
———	FACTORY WIRING
— — —	FIELD CONTROL WIRING
- - - -	FIELD POWER WIRING
- - - - - -	CIRCUIT BOARD TRACE
—— · · ·	ACCESSORY OR OPTIONAL WIRING

ACCY	ACCESSORY
AWG	AMERICAN WIRE GAGE
BAS	BUILDING AUTOMATION NETWORK
CC	CONTACTOR,COMPRESSOR
C	COMMON
CAP	CAPACITOR
CB	CIRCUIT BREAKER
CCH	CRANKCASE HEATER
CCHR	CRANKCASE HEATER RELAY
CCHTS	CRANKCASE HEATER TEMP SWITCH
CLO	COMPRESSOR LOCKOUT
CLV	COOLING LIQUID VALVE
COFS	CONDENSATE OVERFLOW SWITCH
COM	SIGNAL COMMON
COMP	COMPRESSOR MOTOR
DDC	DIRECT DIGITAL CONTROL
DFB	DEFROST BOARD
DFT	DEFROST THERMOSTAT
EHR	ELECTRIC HEAT RELAY
ENTH	ENTHALPY
ERV	ENERGY RECOVERY VENTILATOR
ESL	ENTHALPY SENSOR - LOW
FB	FUSE BLOCK
FIOP	FACTORY INSTALLED OPTION
FPT	FREEZE PROTECTION THERMOSTAT
FST	FAN HOUSING TEMP SENSOR
FU	FUSE

G	THERMOSTAT FAN CALL
GR(GND)	GROUND
HACR	HEATING, AIR-CONDITIONING, REFRIGERATION BREAKER
HR	HEATER RELAY
HPC	HEAD PRESSURE CONTROL
HPS	HIGH PRESSURE SWITCH
IAQ	INDOOR AIR QUALITY SENSORS
IFM	INDOOR FAN MOTOR
IFMC	INDOOR FAN MOTOR CONTROL
IFO	INDOOR FAN ON SIGNAL
IRH	INDOOR RELATIVE HUMIDITY
JMP	JUMPER
L1	LINE 1
LA	LOW AMBIENT LOCKOUT
LAR	LOW AMBIENT RELAY
LAS	LOW AMBIENT SWITCH
LDR	COMPRESSOR LOADER
LEN	LOCAL EQUIPMENT NETWORK
LLSVR	LIQUID LINE SOLENOID VALVE
LOC	LOSS OF CHARGE
LPS	LOW PRESSURE SWITCH
LS	LIMIT SWITCH
LSM	LIMIT SWITCH (MANUAL RESET)
LTLO	LOW TEMP LOCKOUT

MTR	MOTOR
OAQ	OUTDOOR AIR QUALITY
OAT	OUTDOOR AIR TEMP. SEN
OFM	OUTDOOR FAN MOTOR
OFR	OUTDOOR FAN RELAY
OL	OVERLOAD
PER	POWER EXHAUST RELAY
PH	PHASE
PL	PLUG ASSEMBLY
POT	POTENTIOMETER
PMR	PHASE MONITOR RELAY
PS	PRESSURE SWITCH
PWM	PULSE WIDTH MODULATION
QT	QUADRUPLE TERMINAL
R	THERMOSTAT POWER
RAT	RETURN AIR TEMP. SENSOR
RDB	REFRIGERANT DISSIPATION BOARD
RDS	REFRIGERANT DISSIPATION SENSOR
RLV	REHEAT LIQUID VALVE
RNET	LOCAL ACCESS NETWORK
RVS	REVERSING VALVE SOLENOID
RVSR	REVERSING VALVE RELAY
SAT	SUPPLY AIR TEMP SENSOR
SDP	SYSTEM DISCHARGE PRESSURE
SPT	SPACE TEMPERATURE SENSOR
SPTO	SPACE TEMPERATURE OFFSET
SSP	SYSTEM SUCTION PRESSURE
SW	SWITCH
TB	TERMINAL BLOCK
TDR	TIME DELAY RELAY
TRAN	TRANSFORMER
UCB	UNIT CONTROL BOARD
W1	1st STAGE OF HEATING CALL
W2	2nd STAGE OF HEATING CALL
Y1	1st STAGE OF COOLING CALL
Y2	2nd STAGE OF COOLING CALL

48TC003162 | F

Fig. G — 50FEQ*04-07 Power Wiring Diagram — 208/230-3-60

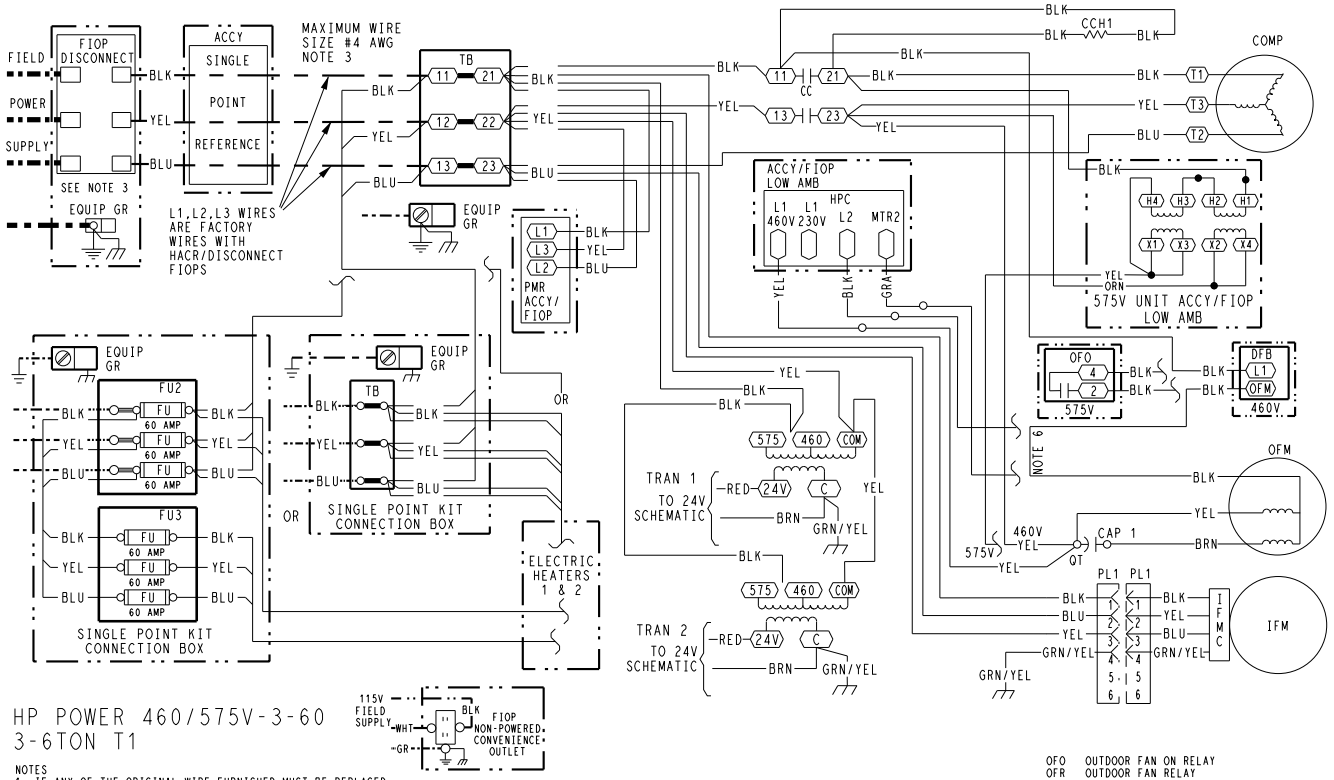

NOTES
1. IF ANY OF THE ORIGINAL WIRE FURNISHED MUST BE REPLACED. IT MUST BE REPLACED WITH TYPE 90° C WIRE OR ITS EQUIVALENT.
2. COMPRESSOR AND FAN MOTORS ARE THERMALLY PROTECTED.
3. USE COPPER CONDUCTOR ONLY.
4. DO NOT DISCONNECT POWER PLUG OR SIGNAL WIRE WHILE UNDER LOAD.
5. TRANSFORMER IS DEDICATED BASED ON UNIT VOLTAGE. TAPS ONLY SHOWN TO SIMPLIFY SCHEMATIC.
6. THIS WIRE NOT USED WITH LOW AMBIENT FIOP/ACCY.

LEGEND

- MARKED WIRE
- TERMINAL (MARKED)
- TERMINAL (UNMARKED)
- TERMINAL BLOCK
- SPLICE
- SPLICE (MARKED)
- FACTORY WIRING
- FIELD CONTROL WIRING
- FIELD POWER WIRING
- CIRCUIT BOARD TRACE
- ACCESSORY OR OPTIONAL WIRING

ACCY	ACCESSORY
AWG	AMERICAN WIRE GAGE
BAS	BUILDING AUTOMATION NETWORK
CC	CONTACTOR,COMPRESSOR
C	COMMON
CAP	CAPACITOR
CB	CIRCUIT BREAKER
CCH	CRANKCASE HEATER
CCHR	CRANKCASE HEATER RELAY
CCHTS	CRANKCASE HEATER TEMP SWITCH
CLO	COMPRESSOR LOCKOUT
CLV	COOLING LIQUID VALVE
COFS	CONDENSATE OVERFLOW SWITCH
COM	SIGNAL COMMON
COMP	COMPRESSOR MOTOR
DDC	DIRECT DIGITAL CONTROL
DFB	DEFROST BOARD
DFT	DEFROST THERMOSTAT
EHR	ELECTRIC HEAT RELAY
ENTH	ENTHALPY
ERV	ENERGY RECOVERY VENTILATOR
ESL	ENTHALPY SENSOR - LOW
FB	FUSE BLOCK
FIOP	FACTORY INSTALLED OPTION
FPT	FREEZE PROTECTION THERMOSTAT
FST	FAN HOUSING TEMP SENSOR
FU	FUSE
G	THERMOSTAT FAN CALL
GR(GND)	GROUND
HACR	HEATING, AIR-CONDITIONING, REFRIGERATION BREAKER
HR	HEATER RELAY
HGRH	HOT GAS REHEAT
HPC	HEAD PRESSURE CONTROL
HPS	HIGH PRESSURE SWITCH
HUM	HUMIDISTAT
IAQ	INDOOR AIR QUALITY SENSORS
IFM	INDOOR FAN MOTOR
IFMC	INDOOR FAN MOTOR CONTROL
IFO	INDOOR FAN ON SIGNAL
IRH	INDOOR RELATIVE HUMIDITY
JMP	JUMPER
L1	LINE 1
LA	LOW AMBIENT LOCKOUT
LAR	LOW AMBIENT RELAY
LAS	LOW AMBIENT SWITCH
LDR	COMPRESSOR LOADER
LEN	LOCAL EQUIPMENT NETWORK
LOC	LOSS OF CHARGE
LOOP PWR	CURRENT LOOP POWER
LPS	LOW PRESSURE SWITCH
LS	LIMIT SWITCH
LSM	LIMIT SWITCH (MANUAL RESET)
LTLO	LOW TEMP LOCKOUT
MBB	MAIN BASE BOARD
MOV	METAL OXIDE VARISTOR
MTR	MOTOR
OAQ	OUTDOOR AIR QUALITY
OAT	OUTDOOR AIR TEMP. SEN
OFM	OUTDOOR FAN MOTOR
OFO	OUTDOOR FAN ON RELAY
OFR	OUTDOOR FAN RELAY
OL	OVERLOAD
PER	POWER EXHAUST RELAY
PH	PHASE
PL	PLUG ASSEMBLY
POT	POTENTIOMETER
PMR	PHASE MONITOR RELAY
PS	PRESSURE SWITCH
PWM	PULSE WIDTH MODULATION
QT	QUADRUPLE TERMINAL
R	THERMOSTAT POWER
RAT	RETURN AIR TEMP. SEN
RDB	REFRIGERANT DISSIPATION BOARD
RDS	REFRIGERANT DISSIPATION SENSOR
RDV	REHEAT DISCHARGE VALVE
RH	RELATIVE HUMIDITY
RLV	REHEAT LIQUID VALVE
RNET	LOCAL ACCESS NETWORK
RVS	REVERSING VALVE SOLENOID
SAT	SUPPLY AIR TEMP SENSOR
SDP	SYSTEM DISCHARGE PRESSURE
SPRH	SPACE RELATIVE HUMIDITY
SPT	SPACE TEMPERATURE SENSOR
SPTO	SPACE TEMPERATURE OFFSET
SSP	SYSTEM SUCTION PRESSURE
SW	SWITCH
TB	TERMINAL BLOCK
TDR	TIME DELAY RELAY
TRAN	TRANSFORMER
UCB	UNIT CONTROL BOARD
W1	1st STAGE OF HEATING CALL
W2	2nd STAGE OF HEATING CALL
Y1	1st STAGE OF COOLING CALL
Y2	2nd STAGE OF COOLING CALL

48TC003164 | G

Fig. H — 50FEQ*04-07 Power Wiring Diagram — 460/575-3-60

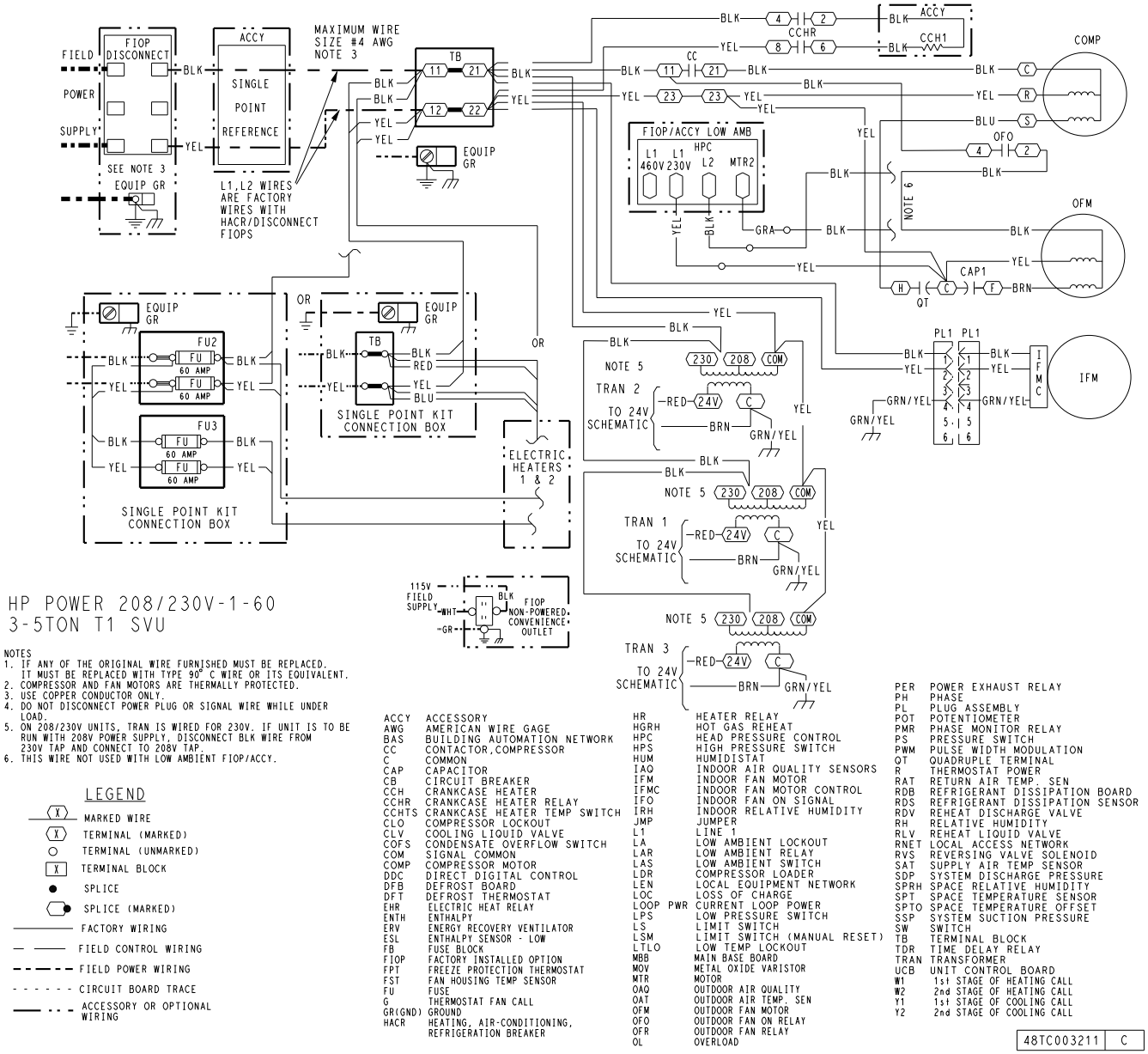

HP POWER 208/230V-1-60
3-5TON T1 SVU

NOTES
1. IF ANY OF THE ORIGINAL WIRE FURNISHED MUST BE REPLACED, IT MUST BE REPLACED WITH TYPE 90° C WIRE OR ITS EQUIVALENT.
2. COMPRESSOR AND FAN MOTORS ARE THERMALLY PROTECTED.
3. USE COPPER CONDUCTOR ONLY.
4. DO NOT DISCONNECT POWER PLUG OR SIGNAL WIRE WHILE UNDER LOAD.
5. ON 208/230V UNITS, TRAN IS WIRED FOR 230V. IF UNIT IS TO BE RUN WITH 208V POWER SUPPLY, DISCONNECT BLK WIRE FROM 230V TAP AND CONNECT TO 208V TAP.
6. THIS WIRE NOT USED WITH LOW AMBIENT FIOP/ACCY.

LEGEND

- MARKED WIRE
- TERMINAL (MARKED)
- TERMINAL (UNMARKED)
- TERMINAL BLOCK
- SPLICE
- SPLICE (MARKED)
- FACTORY WIRING
- FIELD CONTROL WIRING
- FIELD POWER WIRING
- CIRCUIT BOARD TRACE
- ACCESSORY OR OPTIONAL WIRING

ACCY	ACCESSORY
AWG	AMERICAN WIRE GAGE
BAS	BUILDING AUTOMATION NETWORK
CC	CONTACTOR,COMPRESSOR
C	COMMON
CAP	CAPACITOR
CB	CIRCUIT BREAKER
CCH	CRANKCASE HEATER
CCHR	CRANKCASE HEATER RELAY
CCHTS	CRANKCASE HEATER TEMP SWITCH
CLO	COMPRESSOR LOCKOUT
CLV	COOLING LIQUID VALVE
COFS	CONDENSATE OVERFLOW SWITCH
COM	SIGNAL COMMON
COMP	COMPRESSOR MOTOR
DDC	DIRECT DIGITAL CONTROL
DFB	DEFROST BOARD
DFT	DEFROST THERMOSTAT
EHR	ELECTRIC HEAT RELAY
ENTH	ENTHALPY
ERV	ENERGY RECOVERY VENTILATOR
ESL	ENTHALPY SENSOR - LOW
FB	FUSE BLOCK
FIOP	FACTORY INSTALLED OPTION
FPT	FREEZE PROTECTION THERMOSTAT
FST	FAN HOUSING TEMP SENSOR
FU	FUSE
G	THERMOSTAT FAN CALL
GR(GND)	GROUND
HACR	HEATING, AIR-CONDITIONING, REFRIGERATION BREAKER
HR	HEATER RELAY
HGRH	HOT GAS REHEAT
HPC	HEAD PRESSURE CONTROL
HPS	HIGH PRESSURE SWITCH
HUM	HUMIDISTAT
IAQ	INDOOR AIR QUALITY SENSORS
IFM	INDOOR FAN MOTOR
IFMC	INDOOR FAN MOTOR CONTROL
IFO	INDOOR FAN ON SIGNAL
IRH	INDOOR RELATIVE HUMIDITY
JMP	JUMPER
L1	LINE 1
LA	LOW AMBIENT LOCKOUT
LAR	LOW AMBIENT RELAY
LAS	LOW AMBIENT SWITCH
LDR	COMPRESSOR LOADER
LEN	LOCAL EQUIPMENT NETWORK
LOC	LOSS OF CHARGE
LOOP PWR	CURRENT LOOP POWER
LPS	LOW PRESSURE SWITCH
LS	LIMIT SWITCH
LSM	LIMIT SWITCH (MANUAL RESET)
LTLO	LOW TEMP LOCKOUT
MBB	MAIN BASE BOARD
MOV	METAL OXIDE VARISTOR
MTR	MOTOR
OAQ	OUTDOOR AIR QUALITY
OAT	OUTDOOR AIR TEMP. SEN
OFM	OUTDOOR FAN MOTOR
OFO	OUTDOOR FAN ON RELAY
OFR	OUTDOOR FAN RELAY
OL	OVERLOAD
PER	POWER EXHAUST RELAY
PH	PHASE
PL	PLUG ASSEMBLY
POT	POTENTIOMETER
PMR	PHASE MONITOR RELAY
PS	PRESSURE SWITCH
PWM	PULSE WIDTH MODULATION
QT	QUADRUPLE TERMINAL
R	THERMOSTAT POWER
RAT	RETURN AIR TEMP. SEN
RDB	REFRIGERANT DISSIPATION BOARD
RDS	REFRIGERANT DISSIPATION SENSOR
RDV	REHEAT DISCHARGE VALVE
RH	RELATIVE HUMIDITY
RLV	REHEAT LIQUID VALVE
RNET	LOCAL ACCESS NETWORK
RVS	REVERSING VALVE SOLENOID
SAT	SUPPLY AIR TEMP SENSOR
SDP	SYSTEM DISCHARGE PRESSURE
SPRH	SPACE RELATIVE HUMIDITY
SPT	SPACE TEMPERATURE SENSOR
SPTO	SPACE TEMPERATURE OFFSET
SSP	SYSTEM SUCTION PRESSURE
SW	SWITCH
TB	TERMINAL BLOCK
TDR	TIME DELAY RELAY
TRAN	TRANSFORMER
UCB	UNIT CONTROL BOARD
W1	1st STAGE OF HEATING CALL
W2	2nd STAGE OF HEATING CALL
Y1	1st STAGE OF COOLING CALL
Y2	2nd STAGE OF COOLING CALL

48TC003211 C

Fig. I — 50FEQ*04-06 SystemVu™ Power Wiring Diagram — 208/230-1-60

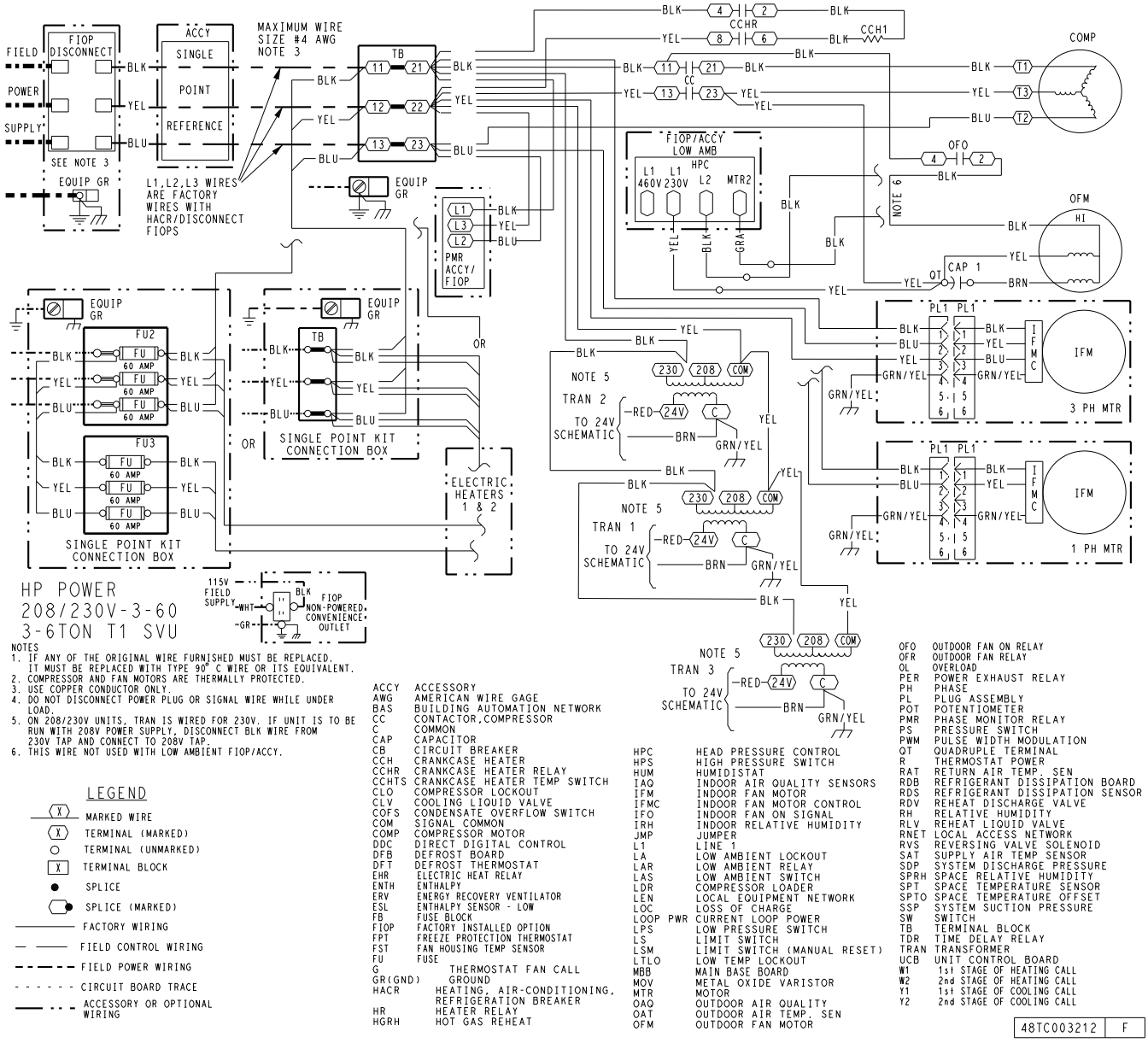

NOTES
1. IF ANY OF THE ORIGINAL WIRE FURNISHED MUST BE REPLACED, IT MUST BE REPLACED WITH TYPE 90° C WIRE OR ITS EQUIVALENT.
2. COMPRESSOR AND FAN MOTORS ARE THERMALLY PROTECTED.
3. USE COPPER CONDUCTOR ONLY.
4. DO NOT DISCONNECT POWER PLUG OR SIGNAL WIRE WHILE UNDER LOAD.
5. ON 208/230V UNITS, TRAN IS WIRED FOR 230V. IF UNIT IS TO BE RUN WITH 208V POWER SUPPLY, DISCONNECT BLK WIRE FROM 230V TAP AND CONNECT TO 208V TAP.
6. THIS WIRE NOT USED WITH LOW AMBIENT FIOP/ACCY.

LEGEND

- MARKED WIRE
- TERMINAL (MARKED)
- TERMINAL (UNMARKED)
- TERMINAL BLOCK
- SPLICE
- SPLICE (MARKED)
- FACTORY WIRING
- FIELD CONTROL WIRING
- FIELD POWER WIRING
- CIRCUIT BOARD TRACE
- ACCESSORY OR OPTIONAL WIRING

ACCY	ACCESSORY
AWG	AMERICAN WIRE GAGE
BAS	BUILDING AUTOMATION NETWORK
CC	CONTACTOR,COMPRESSOR
C	COMMON
CAP	CAPACITOR
CB	CIRCUIT BREAKER
CCH	CRANKCASE HEATER
CCHR	CRANKCASE HEATER RELAY
CCHTS	CRANKCASE HEATER TEMP SWITCH
CLO	COMPRESSOR LOCKOUT
CLV	COOLING LIQUID VALVE
COFS	CONDENSATE OVERFLOW SWITCH
COM	SIGNAL COMMON
COMP	COMPRESSOR MOTOR
DDC	DIRECT DIGITAL CONTROL
DFB	DEFROST BOARD
DFT	DEFROST THERMOSTAT
EHR	ELECTRIC HEAT RELAY
ENTH	ENTHALPY
ERV	ENERGY RECOVERY VENTILATOR
ESL	ENTHALPY SENSOR - LOW
FB	FUSE BLOCK
FIOP	FACTORY INSTALLED OPTION
FPT	FREEZE PROTECTION THERMOSTAT
FST	FAN HOUSING TEMP SENSOR
FU	FUSE
G	THERMOSTAT FAN CALL
GR(GND)	GROUND
HACR	HEATING, AIR-CONDITIONING, REFRIGERATION BREAKER
HR	HEATER RELAY
HGRH	HOT GAS REHEAT
HPC	HEAD PRESSURE CONTROL
HPS	HIGH PRESSURE SWITCH
HUM	HUMIDISTAT
IAQ	INDOOR AIR QUALITY SENSORS
IFM	INDOOR FAN MOTOR
IFMC	INDOOR FAN MOTOR CONTROL
IFO	INDOOR FAN ON SIGNAL
IRH	INDOOR RELATIVE HUMIDITY
JMP	JUMPER
L1	LINE 1
LA	LOW AMBIENT LOCKOUT
LAR	LOW AMBIENT RELAY
LAS	LOW AMBIENT SWITCH
LDR	COMPRESSOR LOADER
LEN	LOCAL EQUIPMENT NETWORK
LOC	LOSS OF CHARGE
LOOP PWR	CURRENT LOOP POWER
LPS	LOW PRESSURE SWITCH
LS	LIMIT SWITCH
LSM	LIMIT SWITCH (MANUAL RESET)
LTLO	LOW TEMP LOCKOUT
MBB	MAIN BASE BOARD
MOV	METAL OXIDE VARISTOR
MTR	MOTOR
OAQ	OUTDOOR AIR QUALITY
OAT	OUTDOOR AIR TEMP. SEN
OFM	OUTDOOR FAN MOTOR
OFO	OUTDOOR FAN ON RELAY
OFR	OUTDOOR FAN RELAY
OL	OVERLOAD
PER	POWER EXHAUST RELAY
PH	PHASE
PL	PLUG ASSEMBLY
POT	POTENTIOMETER
PMR	PHASE MONITOR RELAY
PS	PRESSURE SWITCH
PWM	PULSE WIDTH MODULATION
QT	QUADRUPLE TERMINAL
R	THERMOSTAT POWER
RAT	RETURN AIR TEMP. SEN
RDB	REFRIGERANT DISSIPATION BOARD
RDS	REFRIGERANT DISSIPATION SENSOR
RDV	REHEAT DISCHARGE VALVE
RH	RELATIVE HUMIDITY
RLV	REHEAT LIQUID VALVE
RNET	LOCAL ACCESS NETWORK
RVS	REVERSING VALVE SOLENOID
SAT	SUPPLY AIR TEMP SENSOR
SDP	SYSTEM DISCHARGE PRESSURE
SPRH	SPACE RELATIVE HUMIDITY
SPT	SPACE TEMPERATURE SENSOR
SPTO	SPACE TEMPERATURE OFFSET
SSP	SYSTEM SUCTION PRESSURE
SW	SWITCH
TB	TERMINAL BLOCK
TDR	TIME DELAY RELAY
TRAN	TRANSFORMER
UCB	UNIT CONTROL BOARD
W1	1st STAGE OF HEATING CALL
W2	2nd STAGE OF HEATING CALL
Y1	1st STAGE OF COOLING CALL
Y2	2nd STAGE OF COOLING CALL

48TC003212 | F

Fig. J — 50FEQ*04-07 SystemVu™ Power Wiring Diagram — 208/230-3-60

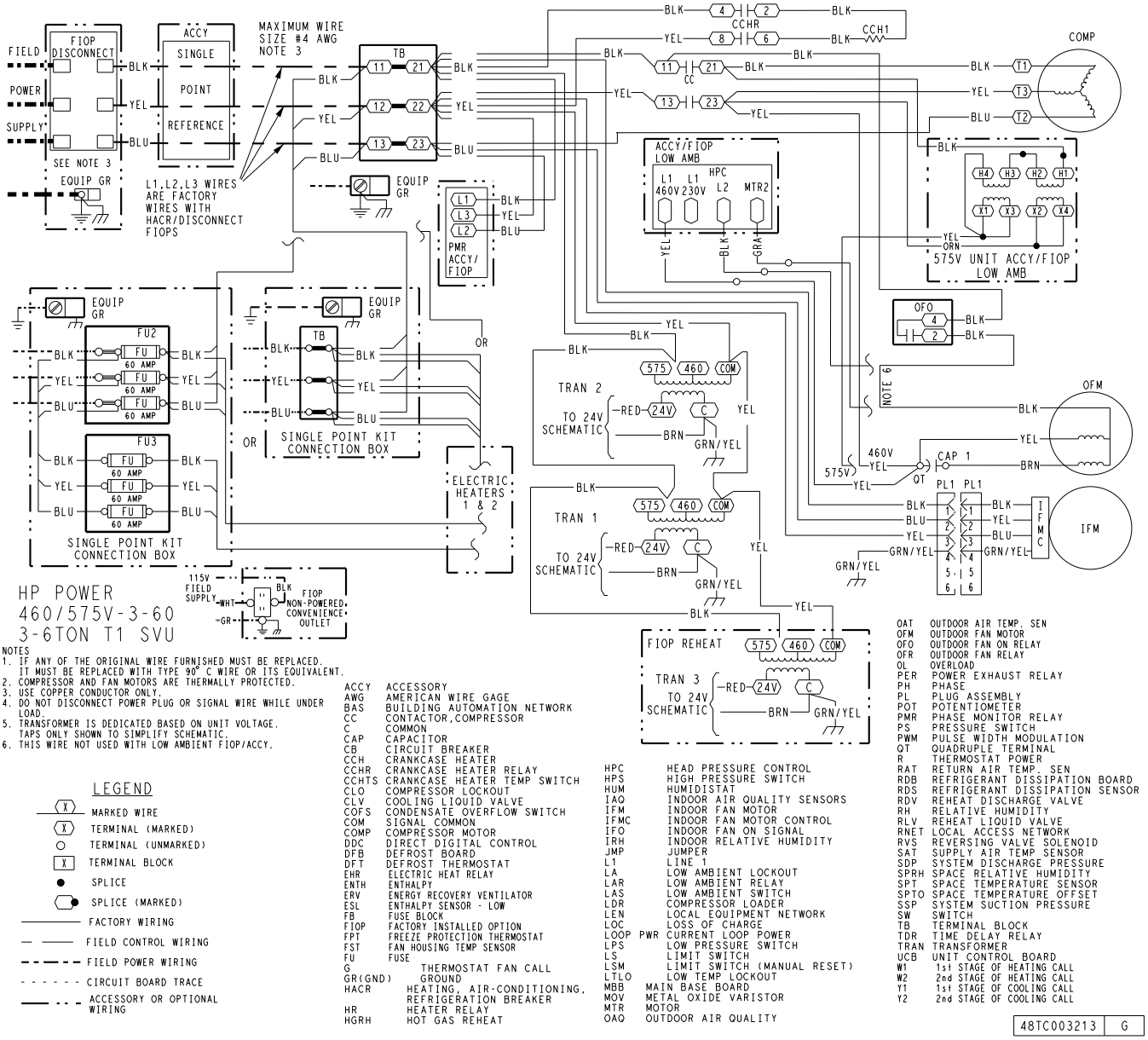

NOTES
1. IF ANY OF THE ORIGINAL WIRE FURNISHED MUST BE REPLACED. IT MUST BE REPLACED WITH TYPE 90° C WIRE OR ITS EQUIVALENT.
2. COMPRESSOR AND FAN MOTORS ARE THERMALLY PROTECTED.
3. USE COPPER CONDUCTOR ONLY.
4. DO NOT DISCONNECT POWER PLUG OR SIGNAL WIRE WHILE UNDER LOAD.
5. TRANSFORMER IS DEDICATED BASED ON UNIT VOLTAGE. TAPS ONLY SHOWN TO SIMPLIFY SCHEMATIC.
6. THIS WIRE NOT USED WITH LOW AMBIENT FIOP/ACCY.

LEGEND

- MARKED WIRE
- TERMINAL (MARKED)
- TERMINAL (UNMARKED)
- TERMINAL BLOCK
- SPLICE
- SPLICE (MARKED)
- FACTORY WIRING
- FIELD CONTROL WIRING
- FIELD POWER WIRING
- CIRCUIT BOARD TRACE
- ACCESSORY OR OPTIONAL WIRING

ACCY	ACCESSORY
AWG	AMERICAN WIRE GAGE
BAS	BUILDING AUTOMATION NETWORK
CC	CONTACTOR,COMPRESSOR
C	COMMON
CAP	CAPACITOR
CB	CIRCUIT BREAKER
CCH	CRANKCASE HEATER
CCHR	CRANKCASE HEATER RELAY
CCHTS	CRANKCASE HEATER TEMP SWITCH
CLO	COMPRESSOR LOCKOUT
CLV	COOLING LIQUID VALVE
COFS	CONDENSATE OVERFLOW SWITCH
COM	SIGNAL COMMON
COMP	COMPRESSOR MOTOR
DDC	DIRECT DIGITAL CONTROL
DFB	DEFROST BOARD
DFT	DEFROST THERMOSTAT
EHR	ELECTRIC HEAT RELAY
ENTH	ENTHALPY
ERV	ENERGY RECOVERY VENTILATOR
ESL	ENTHALPY SENSOR - LOW
FB	FUSE BLOCK
FIOP	FACTORY INSTALLED OPTION
FPT	FREEZE PROTECTION THERMOSTAT
FST	FAN HOUSING TEMP SENSOR
FU	FUSE
G	THERMOSTAT FAN CALL
GR(GND)	GROUND
HACR	HEATING, AIR-CONDITIONING, REFRIGERATION BREAKER
HR	HEATER RELAY
HGRH	HOT GAS REHEAT
HPC	HEAD PRESSURE CONTROL
HPS	HIGH PRESSURE SWITCH
HUM	HUMIDISTAT
IAQ	INDOOR AIR QUALITY SENSORS
IFM	INDOOR FAN MOTOR
IFMC	INDOOR FAN MOTOR CONTROL
IFO	INDOOR FAN ON SIGNAL
IRH	INDOOR RELATIVE HUMIDITY
JMP	JUMPER
L1	LINE 1
LA	LOW AMBIENT LOCKOUT
LAR	LOW AMBIENT RELAY
LAS	LOW AMBIENT SWITCH
LDR	COMPRESSOR LOADER
LEN	LOCAL EQUIPMENT NETWORK
LOC	LOSS OF CHARGE
LOOP PWR	CURRENT LOOP POWER
LPS	LOW PRESSURE SWITCH
LS	LIMIT SWITCH
LSM	LIMIT SWITCH (MANUAL RESET)
LTLO	LOW TEMP LOCKOUT
MBB	MAIN BASE BOARD
MOV	METAL OXIDE VARISTOR
MTR	MOTOR
OAQ	OUTDOOR AIR QUALITY
OAT	OUTDOOR AIR TEMP. SEN
OFM	OUTDOOR FAN MOTOR
OFO	OUTDOOR FAN ON RELAY
OFR	OUTDOOR FAN RELAY
OL	OVERLOAD
PER	POWER EXHAUST RELAY
PH	PHASE
PL	PLUG ASSEMBLY
POT	POTENTIOMETER
PMR	PHASE MONITOR RELAY
PS	PRESSURE SWITCH
PWM	PULSE WIDTH MODULATION
QT	QUADRUPLE TERMINAL
R	THERMOSTAT POWER
RAT	RETURN AIR TEMP. SEN
RDB	REFRIGERANT DISSIPATION BOARD
RDS	REFRIGERANT DISSIPATION SENSOR
RDV	REHEAT DISCHARGE VALVE
RH	RELATIVE HUMIDITY
RLV	REHEAT LIQUID VALVE
RNET	LOCAL ACCESS NETWORK
RVS	REVERSING VALVE SOLENOID
SAT	SUPPLY AIR TEMP SENSOR
SDP	SYSTEM DISCHARGE PRESSURE
SPRH	SPACE RELATIVE HUMIDITY
SPT	SPACE TEMPERATURE SENSOR
SPTO	SPACE TEMPERATURE OFFSET
SSP	SYSTEM SUCTION PRESSURE
SW	SWITCH
TB	TERMINAL BLOCK
TDR	TIME DELAY RELAY
TRAN	TRANSFORMER
UCB	UNIT CONTROL BOARD
W1	1st STAGE OF HEATING CALL
W2	2nd STAGE OF HEATING CALL
Y1	1st STAGE OF COOLING CALL
Y2	2nd STAGE OF COOLING CALL

48TC003213 | G

Fig. K — 50FEQ*04-07 SystemVu™ Power Wiring Diagram — 460/575-3-60

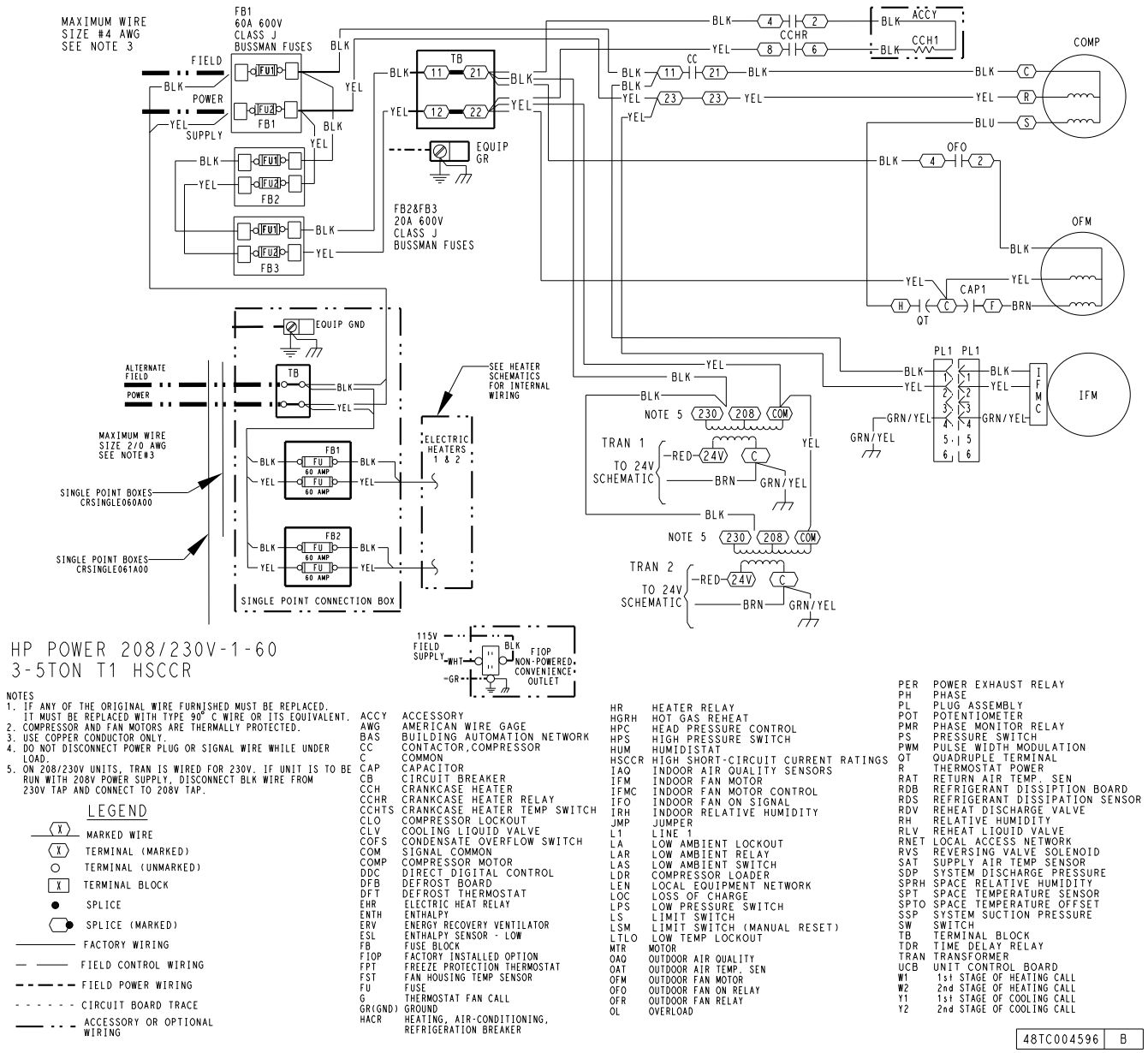

NOTES
1. IF ANY OF THE ORIGINAL WIRE FURNISHED MUST BE REPLACED. IT MUST BE REPLACED WITH TYPE 90° C WIRE OR ITS EQUIVALENT.
2. COMPRESSOR AND FAN MOTORS ARE THERMALLY PROTECTED.
3. USE COPPER CONDUCTOR ONLY.
4. DO NOT DISCONNECT POWER PLUG OR SIGNAL WIRE WHILE UNDER LOAD.
5. ON 208/230V UNITS, TRAN IS WIRED FOR 230V. IF UNIT IS TO BE RUN WITH 208V POWER SUPPLY, DISCONNECT BLK WIRE FROM 230V TAP AND CONNECT TO 208V TAP.

LEGEND

- MARKED WIRE
- TERMINAL (MARKED)
- TERMINAL (UNMARKED)
- TERMINAL BLOCK
- SPLICE
- SPLICE (MARKED)
- FACTORY WIRING
- FIELD CONTROL WIRING
- FIELD POWER WIRING
- CIRCUIT BOARD TRACE
- ACCESSORY OR OPTIONAL WIRING

ACCY	ACCESSORY
AWG	AMERICAN WIRE GAGE
BAS	BUILDING AUTOMATION NETWORK
CC	CONTACTOR,COMPRESSOR
C	COMMON
CAP	CAPACITOR
CB	CIRCUIT BREAKER
CCH	CRANKCASE HEATER
CCHR	CRANKCASE HEATER RELAY
CCHTS	CRANKCASE HEATER TEMP SWITCH
CLO	COMPRESSOR LOCKOUT
CLV	COOLING LIQUID VALVE
COFS	CONDENSATE OVERFLOW SWITCH
COM	SIGNAL COMMON
COMP	COMPRESSOR MOTOR
DDC	DIRECT DIGITAL CONTROL
DFB	DEFROST BOARD
DFT	DEFROST THERMOSTAT
EHR	ELECTRIC HEAT RELAY
ENTH	ENTHALPY
ERV	ENERGY RECOVERY VENTILATOR
ESL	ENTHALPY SENSOR - LOW
FB	FUSE BLOCK
FIOP	FACTORY INSTALLED OPTION
FPT	FREEZE PROTECTION THERMOSTAT
FST	FAN HOUSING TEMP SENSOR
FU	FUSE
G	THERMOSTAT FAN CALL
GR(GND)	GROUND
HACR	HEATING, AIR-CONDITIONING, REFRIGERATION BREAKER
HR	HEATER RELAY
HGRH	HOT GAS REHEAT
HPC	HEAD PRESSURE CONTROL
HPS	HIGH PRESSURE SWITCH
HUM	HUMIDISTAT
HSCCR	HIGH SHORT-CIRCUIT CURRENT RATINGS
IAQ	INDOOR AIR QUALITY SENSORS
IFM	INDOOR FAN MOTOR
IFMC	INDOOR FAN MOTOR CONTROL
IFO	INDOOR FAN ON SIGNAL
IRH	INDOOR RELATIVE HUMIDITY
JMP	JUMPER
L1	LINE 1
LA	LOW AMBIENT LOCKOUT
LAR	LOW AMBIENT RELAY
LAS	LOW AMBIENT SWITCH
LDR	COMPRESSOR LOADER
LEN	LOCAL EQUIPMENT NETWORK
LOC	LOSS OF CHARGE
LPS	LOW PRESSURE SWITCH
LS	LIMIT SWITCH
LSM	LIMIT SWITCH (MANUAL RESET)
LTLO	LOW TEMP LOCKOUT
MTR	MOTOR
OAQ	OUTDOOR AIR QUALITY
OAT	OUTDOOR AIR TEMP. SEN
OFM	OUTDOOR FAN MOTOR
OFO	OUTDOOR FAN ON RELAY
OFR	OUTDOOR FAN RELAY
OL	OVERLOAD
PER	POWER EXHAUST RELAY
PH	PHASE
PL	PLUG ASSEMBLY
POT	POTENTIOMETER
PWM	PHASE MONITOR RELAY
PS	PRESSURE SWITCH
PWM	PULSE WIDTH MODULATION
QT	QUADRUPLE TERMINAL
R	THERMOSTAT POWER
RAT	RETURN AIR TEMP. SEN
RDB	REFRIGERANT DISSIPTION BOARD
RDS	REFRIGERANT DISSIPATION SENSOR
RDV	REHEAT DISCHARGE VALVE
RH	RELATIVE HUMIDITY
RLV	REHEAT LIQUID VALVE
RNET	LOCAL ACCESS NETWORK
RVS	REVERSING VALVE SOLENOID
SAT	SUPPLY AIR TEMP SENSOR
SDP	SYSTEM DISCHARGE PRESSURE
SPRH	SPACE RELATIVE HUMIDITY
SPT	SPACE TEMPERATURE SENSOR
SPTO	SPACE TEMPERATURE OFFSET
SSP	SYSTEM SUCTION PRESSURE
SW	SWITCH
TB	TERMINAL BLOCK
TDR	TIME DELAY RELAY
TRAN	TRANSFORMER
UCB	UNIT CONTROL BOARD
W1	1st STAGE OF HEATING CALL
W2	2nd STAGE OF HEATING CALL
Y1	1st STAGE OF COOLING CALL
Y2	2nd STAGE OF COOLING CALL

48TC004596 | B

Fig. L — 50FEQ*04-06 Power Wiring Diagram — 208/230-1-60 — High SCCR

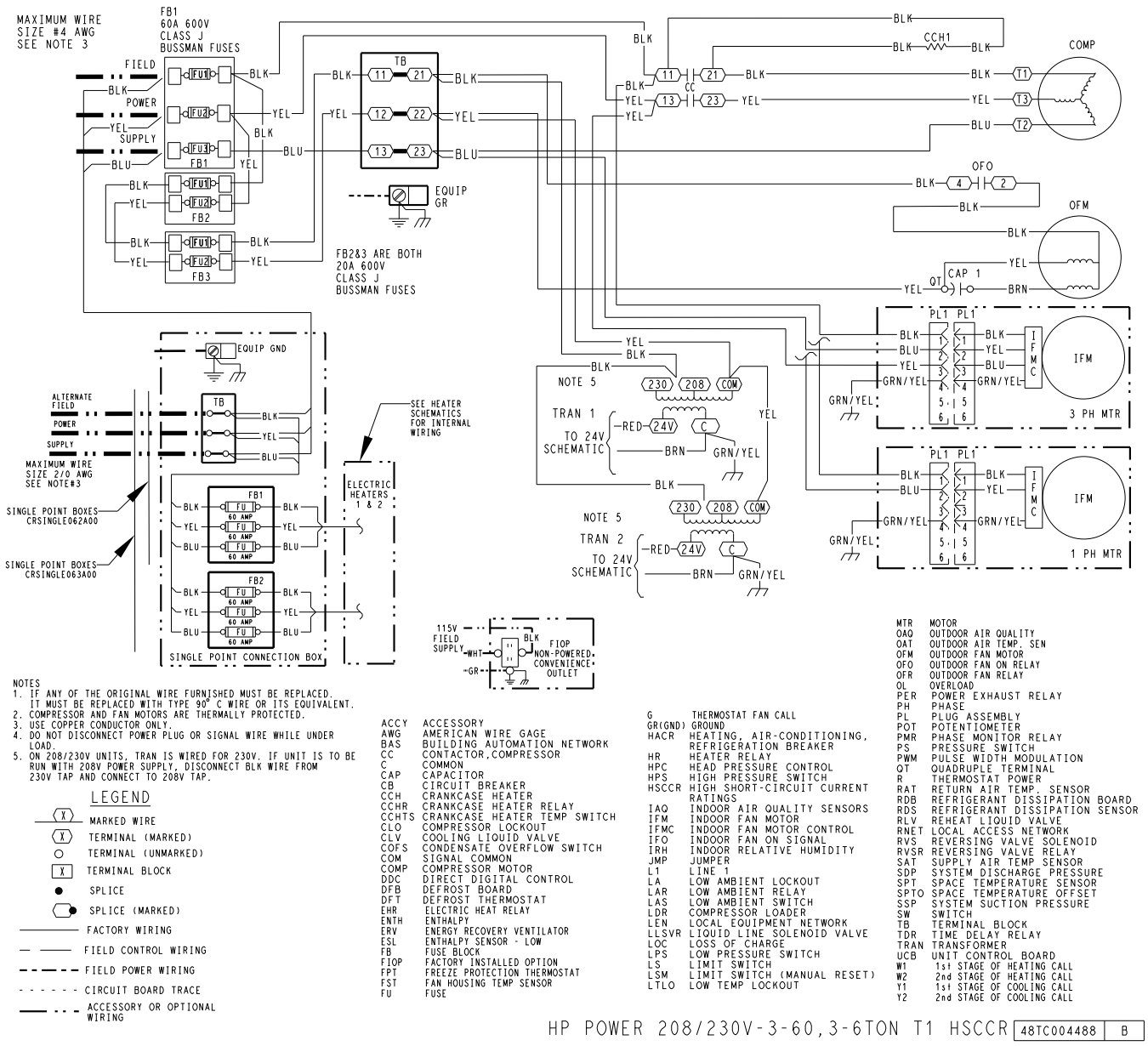

NOTES
1. IF ANY OF THE ORIGINAL WIRE FURNISHED MUST BE REPLACED. IT MUST BE REPLACED WITH TYPE 90° C WIRE OR ITS EQUIVALENT.
2. COMPRESSOR AND FAN MOTORS ARE THERMALLY PROTECTED.
3. USE COPPER CONDUCTOR ONLY.
4. DO NOT DISCONNECT POWER PLUG OR SIGNAL WIRE WHILE UNDER LOAD.
5. ON 208/230V UNITS, TRAN IS WIRED FOR 230V. IF UNIT IS TO BE RUN WITH 208V POWER SUPPLY, DISCONNECT BLK WIRE FROM 230V TAP AND CONNECT TO 208V TAP.

LEGEND

- MARKED WIRE
- TERMINAL (MARKED)
- TERMINAL (UNMARKED)
- TERMINAL BLOCK
- SPLICE
- SPLICE (MARKED)
- FACTORY WIRING
- FIELD CONTROL WIRING
- FIELD POWER WIRING
- CIRCUIT BOARD TRACE
- ACCESSORY OR OPTIONAL WIRING

ACCY	ACCESSORY
AWG	AMERICAN WIRE GAGE
BAS	BUILDING AUTOMATION NETWORK
CC	CONTACTOR,COMPRESSOR
C	COMMON
CAP	CAPACITOR
CB	CIRCUIT BREAKER
CCH	CRANKCASE HEATER
CCHR	CRANKCASE HEATER RELAY
CCHTS	CRANKCASE HEATER TEMP SWITCH
CLO	COMPRESSOR LOCKOUT
CLV	COOLING LIQUID VALVE
COFS	CONDENSATE OVERFLOW SWITCH
COM	SIGNAL COMMON
COMP	COMPRESSOR MOTOR
DDC	DIRECT DIGITAL CONTROL
DFB	DEFROST BOARD
DFT	DEFROST THERMOSTAT
EHR	ELECTRIC HEAT RELAY
ENTH	ENTHALPY
ERV	ENERGY RECOVERY VENTILATOR
ESL	ENTHALPY SENSOR - LOW
FB	FUSE BLOCK
FIOP	FACTORY INSTALLED OPTION
FPT	FREEZE PROTECTION THERMOSTAT
FST	FAN HOUSING TEMP SENSOR
FU	FUSE
G	THERMOSTAT FAN CALL
GR(GND)	GROUND
HACR	HEATING, AIR-CONDITIONING, REFRIGERATION BREAKER
HR	HEATER RELAY
HPC	HEAD PRESSURE CONTROL
HPS	HIGH PRESSURE SWITCH
HSCCR	HIGH SHORT-CIRCUIT CURRENT RATINGS
IAQ	INDOOR AIR QUALITY SENSORS
IFM	INDOOR FAN MOTOR
IFMC	INDOOR FAN MOTOR CONTROL
IFO	INDOOR FAN ON SIGNAL
IRH	INDOOR RELATIVE HUMIDITY
JMP	JUMPER
L1	LINE 1
LA	LOW AMBIENT LOCKOUT
LAR	LOW AMBIENT RELAY
LAS	LOW AMBIENT SWITCH
LDR	COMPRESSOR LOADER
LEN	LOCAL EQUIPMENT NETWORK
LLSVR	LIQUID LINE SOLENOID VALVE
LOC	LOSS OF CHARGE
LPS	LOW PRESSURE SWITCH
LS	LIMIT SWITCH
LSM	LIMIT SWITCH (MANUAL RESET)
LTLO	LOW TEMP LOCKOUT
MTR	MOTOR
OAQ	OUTDOOR AIR QUALITY
OAT	OUTDOOR AIR TEMP. SEN
OFM	OUTDOOR FAN MOTOR
OFO	OUTDOOR FAN ON RELAY
OFR	OUTDOOR FAN RELAY
OL	OVERLOAD
PER	POWER EXHAUST RELAY
PH	PHASE
PL	PLUG ASSEMBLY
POT	POTENTIOMETER
PMR	PHASE MONITOR RELAY
PS	PRESSURE SWITCH
PWM	PULSE WIDTH MODULATION
QT	QUADRUPLE TERMINAL
R	THERMOSTAT POWER
RAT	RETURN AIR TEMP. SENSOR
RDB	REFRIGERANT DISSIPATION BOARD
RDS	REFRIGERANT DISSIPATION SENSOR
RLV	REHEAT LIQUID VALVE
RNET	LOCAL ACCESS NETWORK
RVS	REVERSING VALVE SOLENOID
RVSR	REVERSING VALVE RELAY
SAT	SUPPLY AIR TEMP SENSOR
SDP	SYSTEM DISCHARGE PRESSURE
SPT	SPACE TEMPERATURE SENSOR
SPTO	SPACE TEMPERATURE OFFSET
SSP	SYSTEM SUCTION PRESSURE
SW	SWITCH
TB	TERMINAL BLOCK
TDR	TIME DELAY RELAY
TRAN	TRANSFORMER
UCB	UNIT CONTROL BOARD
W1	1st STAGE OF HEATING CALL
W2	2nd STAGE OF HEATING CALL
Y1	1st STAGE OF COOLING CALL
Y2	2nd STAGE OF COOLING CALL

HP POWER 208/230V-3-60,3-6TON T1 HSCCR 48TC004488 B

Fig. M — 50FEQ*04-07 Power Wiring Diagram — 208/230-3-60 — High SCCR

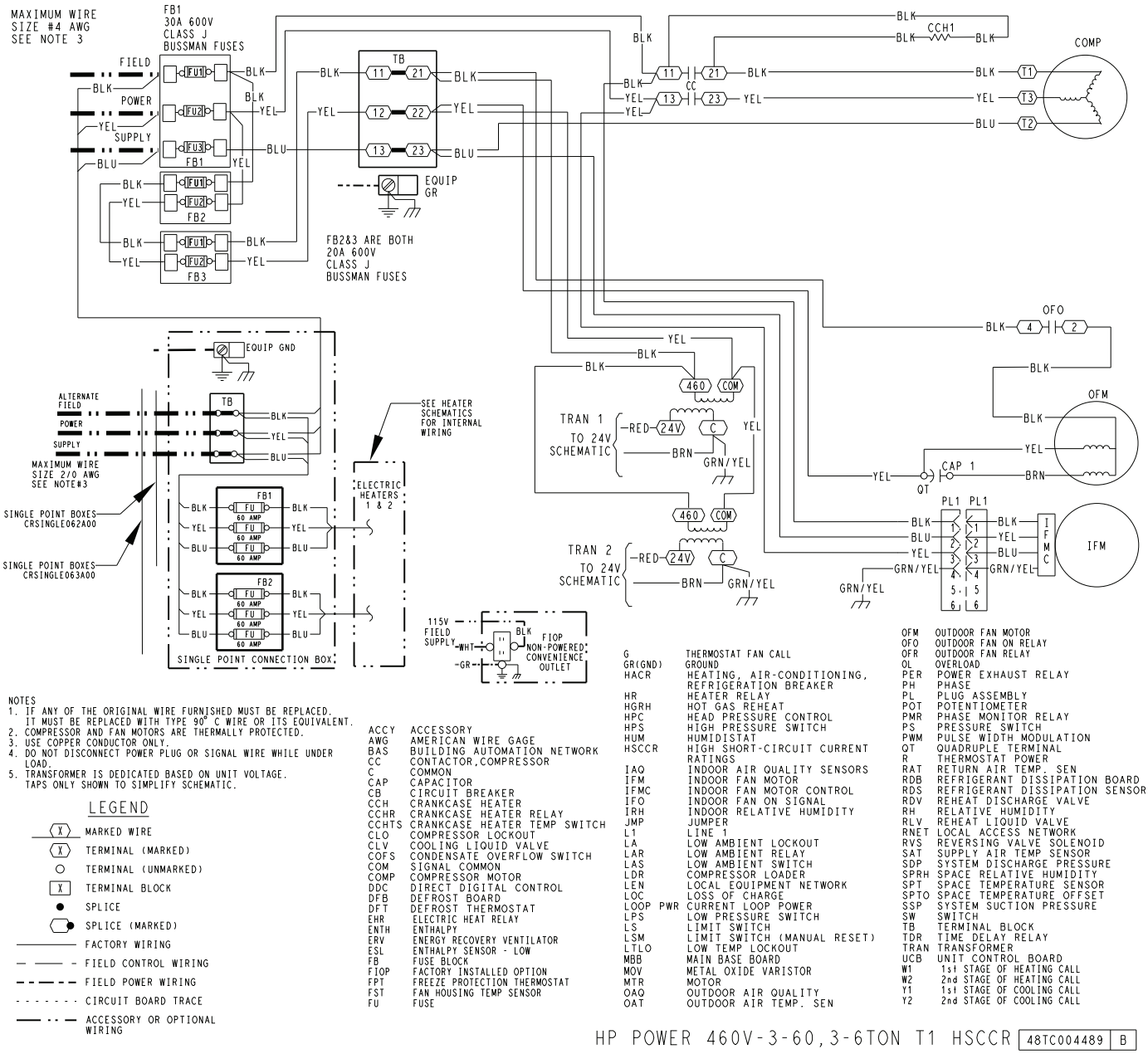

NOTES
1. IF ANY OF THE ORIGINAL WIRE FURNISHED MUST BE REPLACED. IT MUST BE REPLACED WITH TYPE 90° C WIRE OR ITS EQUIVALENT.
2. COMPRESSOR AND FAN MOTORS ARE THERMALLY PROTECTED.
3. USE COPPER CONDUCTOR ONLY.
4. DO NOT DISCONNECT POWER PLUG OR SIGNAL WIRE WHILE UNDER LOAD.
5. TRANSFORMER IS DEDICATED BASED ON UNIT VOLTAGE. TAPS ONLY SHOWN TO SIMPLIFY SCHEMATIC.

LEGEND

- MARKED WIRE
- TERMINAL (MARKED)
- TERMINAL (UNMARKED)
- TERMINAL BLOCK
- SPLICE
- SPLICE (MARKED)
- FACTORY WIRING
- FIELD CONTROL WIRING
- FIELD POWER WIRING
- CIRCUIT BOARD TRACE
- ACCESSORY OR OPTIONAL WIRING

ACCY	ACCESSORY
AWG	AMERICAN WIRE GAGE
BAS	BUILDING AUTOMATION NETWORK
CC	CONTACTOR,COMPRESSOR
C	COMMON
CAP	CAPACITOR
CB	CIRCUIT BREAKER
CCH	CRANKCASE HEATER
CCHR	CRANKCASE HEATER RELAY
CCHTS	CRANKCASE HEATER TEMP SWITCH
CLO	COMPRESSOR LOCKOUT
CLV	COOLING LIQUID VALVE
COFS	CONDENSATE OVERFLOW SWITCH
COM	SIGNAL COMMON
COMP	COMPRESSOR MOTOR
DDC	DIRECT DIGITAL CONTROL
DFB	DEFROST BOARD
DFT	DEFROST THERMOSTAT
EHR	ELECTRIC HEAT RELAY
ENTH	ENTHALPY
ERV	ENERGY RECOVERY VENTILATOR
ESL	ENTHALPY SENSOR - LOW
FB	FUSE BLOCK
FIOP	FACTORY INSTALLED OPTION
FPT	FREEZE PROTECTION THERMOSTAT
FST	FAN HOUSING TEMP SENSOR
FU	FUSE
G	THERMOSTAT FAN CALL
GR(GND)	GROUND
HACR	HEATING, AIR-CONDITIONING, REFRIGERATION BREAKER
HR	HEATER RELAY
HGRH	HOT GAS REHEAT
HPC	HEAD PRESSURE CONTROL
HPS	HIGH PRESSURE SWITCH
HUM	HUMIDISTAT
HSCCR	HIGH SHORT-CIRCUIT CURRENT RATINGS
IAQ	INDOOR AIR QUALITY SENSORS
IFM	INDOOR FAN MOTOR
IFMC	INDOOR FAN MOTOR CONTROL
IFO	INDOOR FAN ON SIGNAL
IRH	INDOOR RELATIVE HUMIDITY
JMP	JUMPER
L1	LINE 1
LA	LOW AMBIENT LOCKOUT
LAR	LOW AMBIENT RELAY
LAS	LOW AMBIENT SWITCH
LDR	COMPRESSOR LOADER
LEN	LOCAL EQUIPMENT NETWORK
LOC	LOSS OF CHARGE
LOOP PWR	CURRENT LOOP POWER
LPS	LOW PRESSURE SWITCH
LS	LIMIT SWITCH
LSM	LIMIT SWITCH (MANUAL RESET)
LTLO	LOW TEMP LOCKOUT
MBB	MAIN BASE BOARD
MOV	METAL OXIDE VARISTOR
MTR	MOTOR
OAQ	OUTDOOR AIR QUALITY
OAT	OUTDOOR AIR TEMP. SEN
OFM	OUTDOOR FAN MOTOR
OFO	OUTDOOR FAN ON RELAY
OFR	OUTDOOR FAN RELAY
OL	OVERLOAD
PER	POWER EXHAUST RELAY
PH	PHASE
PL	PLUG ASSEMBLY
POT	POTENTIOMETER
PMR	PHASE MONITOR RELAY
PS	PRESSURE SWITCH
PWM	PULSE WIDTH MODULATION
QT	QUADRUPLE TERMINAL
R	THERMOSTAT POWER
RAT	RETURN AIR TEMP. SEN
RDB	REFRIGERANT DISSIPATION BOARD
RDS	REFRIGERANT DISSIPATION SENSOR
RDV	REHEAT DISCHARGE VALVE
RH	RELATIVE HUMIDITY
RLV	REHEAT LIQUID VALVE
RNET	LOCAL ACCESS NETWORK
RVS	REVERSING VALVE SOLENOID
SAT	SUPPLY AIR TEMP SENSOR
SDP	SYSTEM DISCHARGE PRESSURE
SPRH	SPACE RELATIVE HUMIDITY
SPT	SPACE TEMPERATURE SENSOR
SPTO	SPACE TEMPERATURE OFFSET
SSP	SYSTEM SUCTION PRESSURE
SW	SWITCH
TB	TERMINAL BLOCK
TDR	TIME DELAY RELAY
TRAN	TRANSFORMER
UCB	UNIT CONTROL BOARD
W1	1st STAGE OF HEATING CALL
W2	2nd STAGE OF HEATING CALL
Y1	1st STAGE OF COOLING CALL
Y2	2nd STAGE OF COOLING CALL

HP POWER 460V-3-60,3-6TON T1 HSCCR | 48TC004489 | B

Fig. N — 50FEQ*04-07 Power Wiring Diagram — 460-3-60 — High SCCR

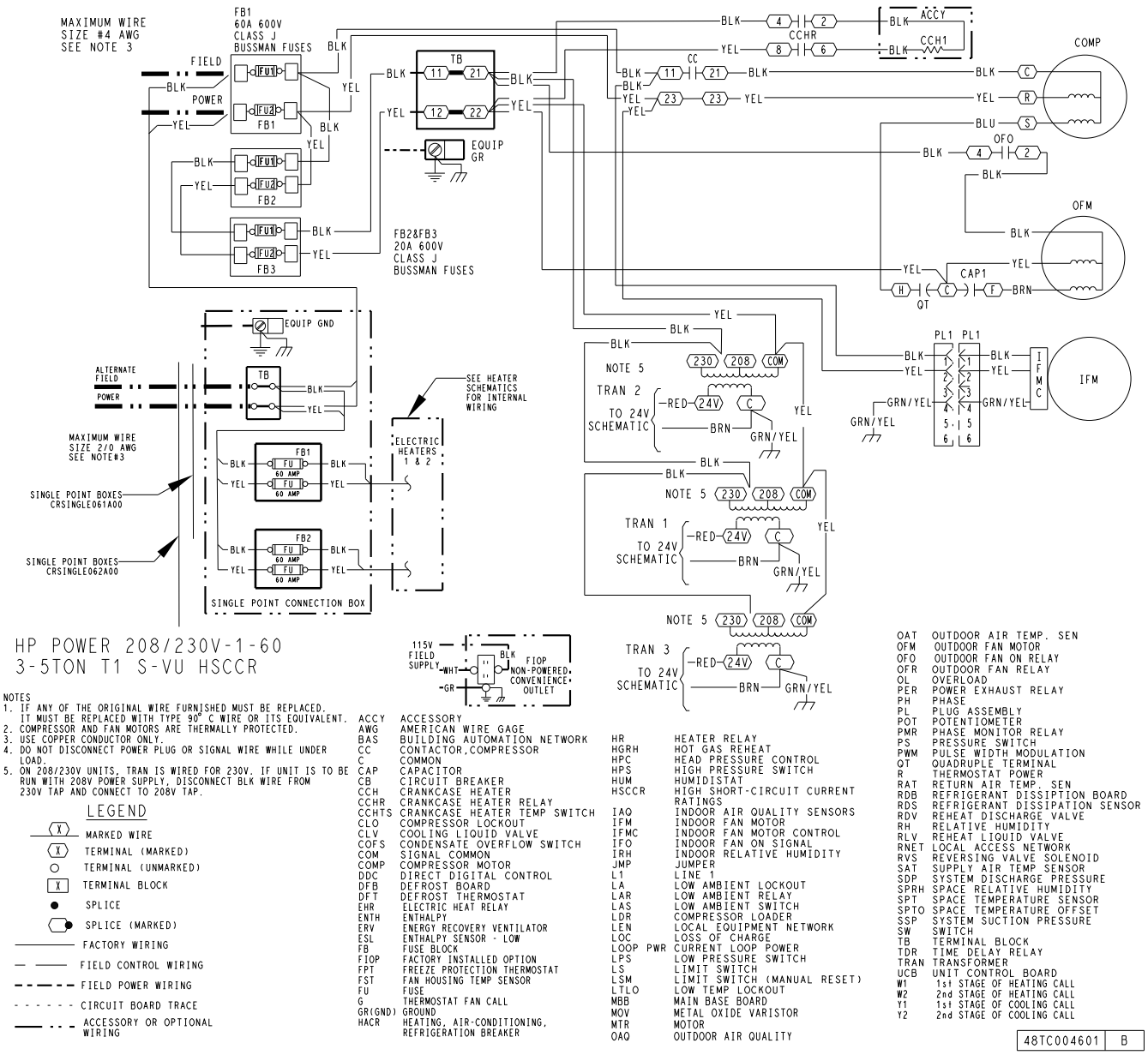

NOTES
1. IF ANY OF THE ORIGINAL WIRE FURNISHED MUST BE REPLACED. IT MUST BE REPLACED WITH TYPE 90° C WIRE OR ITS EQUIVALENT.
2. COMPRESSOR AND FAN MOTORS ARE THERMALLY PROTECTED.
3. USE COPPER CONDUCTOR ONLY.
4. DO NOT DISCONNECT POWER PLUG OR SIGNAL WIRE WHILE UNDER LOAD.
5. ON 208/230V UNITS, TRAN IS WIRED FOR 230V. IF UNIT IS TO BE RUN WITH 208V POWER SUPPLY, DISCONNECT BLK WIRE FROM 230V TAP AND CONNECT TO 208V TAP.

LEGEND

- MARKED WIRE
- TERMINAL (MARKED)
- TERMINAL (UNMARKED)
- TERMINAL BLOCK
- SPLICE
- SPLICE (MARKED)
- FACTORY WIRING
- FIELD CONTROL WIRING
- FIELD POWER WIRING
- CIRCUIT BOARD TRACE
- ACCESSORY OR OPTIONAL WIRING

ACCY	ACCESSORY
AWG	AMERICAN WIRE GAGE
BAS	BUILDING AUTOMATION NETWORK
CC	CONTACTOR,COMPRESSOR
C	COMMON
CAP	CAPACITOR
CB	CIRCUIT BREAKER
CCH	CRANKCASE HEATER
CCHR	CRANKCASE HEATER RELAY
CCHTS	CRANKCASE HEATER TEMP SWITCH
CLO	COMPRESSOR LOCKOUT
CLV	COOLING LIQUID VALVE
COFS	CONDENSATE OVERFLOW SWITCH
COM	SIGNAL COMMON
COMP	COMPRESSOR MOTOR
DDC	DIRECT DIGITAL CONTROL
DFB	DEFROST BOARD
DFT	DEFROST THERMOSTAT
EHR	ELECTRIC HEAT RELAY
ENTH	ENTHALPY
ERV	ENERGY RECOVERY VENTILATOR
ESL	ENTHALPY SENSOR - LOW
FB	FUSE BLOCK
FIOP	FACTORY INSTALLED OPTION
FPT	FREEZE PROTECTION THERMOSTAT
FST	FAN HOUSING TEMP SENSOR
FU	FUSE
G	THERMOSTAT FAN CALL
GR(GND)	GROUND
HACR	HEATING, AIR-CONDITIONING, REFRIGERATION BREAKER
HR	HEATER RELAY
HGRH	HOT GAS REHEAT
HPC	HEAD PRESSURE CONTROL
HPS	HIGH PRESSURE SWITCH
HUM	HUMIDISTAT
HSCCR	HIGH SHORT-CIRCUIT CURRENT RATINGS
IAQ	INDOOR AIR QUALITY SENSORS
IFM	INDOOR FAN MOTOR
IFMC	INDOOR FAN MOTOR CONTROL
IFO	INDOOR FAN ON SIGNAL
IRH	INDOOR RELATIVE HUMIDITY
JMP	JUMPER
L1	LINE 1
LA	LOW AMBIENT LOCKOUT
LAR	LOW AMBIENT RELAY
LAS	LOW AMBIENT SWITCH
LDR	COMPRESSOR LOADER
LEN	LOCAL EQUIPMENT NETWORK
LOC	LOSS OF CHARGE
LOOP PWR	CURRENT LOOP POWER
LPS	LOW PRESSURE SWITCH
LS	LIMIT SWITCH
LSM	LIMIT SWITCH (MANUAL RESET)
LTLO	LOW TEMP LOCKOUT
MBB	MAIN BASE BOARD
MOV	METAL OXIDE VARISTOR
MTR	MOTOR
OAQ	OUTDOOR AIR QUALITY
OAT	OUTDOOR AIR TEMP. SEN
OFM	OUTDOOR FAN MOTOR
OFO	OUTDOOR FAN ON RELAY
OFR	OUTDOOR FAN RELAY
OL	OVERLOAD
PER	POWER EXHAUST RELAY
PH	PHASE
PL	PLUG ASSEMBLY
POT	POTENTIOMETER
PMR	PHASE MONITOR RELAY
PS	PRESSURE SWITCH
PWM	PULSE WIDTH MODULATION
QT	QUADRUPLE TERMINAL
R	THERMOSTAT POWER
RAT	RETURN AIR TEMP. SEN
RDB	REFRIGERANT DISSIPTION BOARD
RDS	REFRIGERANT DISSIPATION SENSOR
RDV	REHEAT DISCHARGE VALVE
RH	RELATIVE HUMIDITY
RLV	REHEAT LIQUID VALVE
RNET	LOCAL ACCESS NETWORK
RVS	REVERSING VALVE SOLENOID
SAT	SUPPLY AIR TEMP SENSOR
SDP	SYSTEM DISCHARGE PRESSURE
SPRH	SPACE RELATIVE HUMIDITY
SPT	SPACE TEMPERATURE SENSOR
SPTO	SPACE TEMPERATURE OFFSET
SSP	SYSTEM SUCTION PRESSURE
SW	SWITCH
TB	TERMINAL BLOCK
TDR	TIME DELAY RELAY
TRAN	TRANSFORMER
UCB	UNIT CONTROL BOARD
W1	1st STAGE OF HEATING CALL
W2	2nd STAGE OF HEATING CALL
Y1	1st STAGE OF COOLING CALL
Y2	2nd STAGE OF COOLING CALL

48TC004601 | B

Fig. O — 50FEQ*04-06 SystemVu™ Power Wiring Diagram — 208/230-1-60 — High SCCR

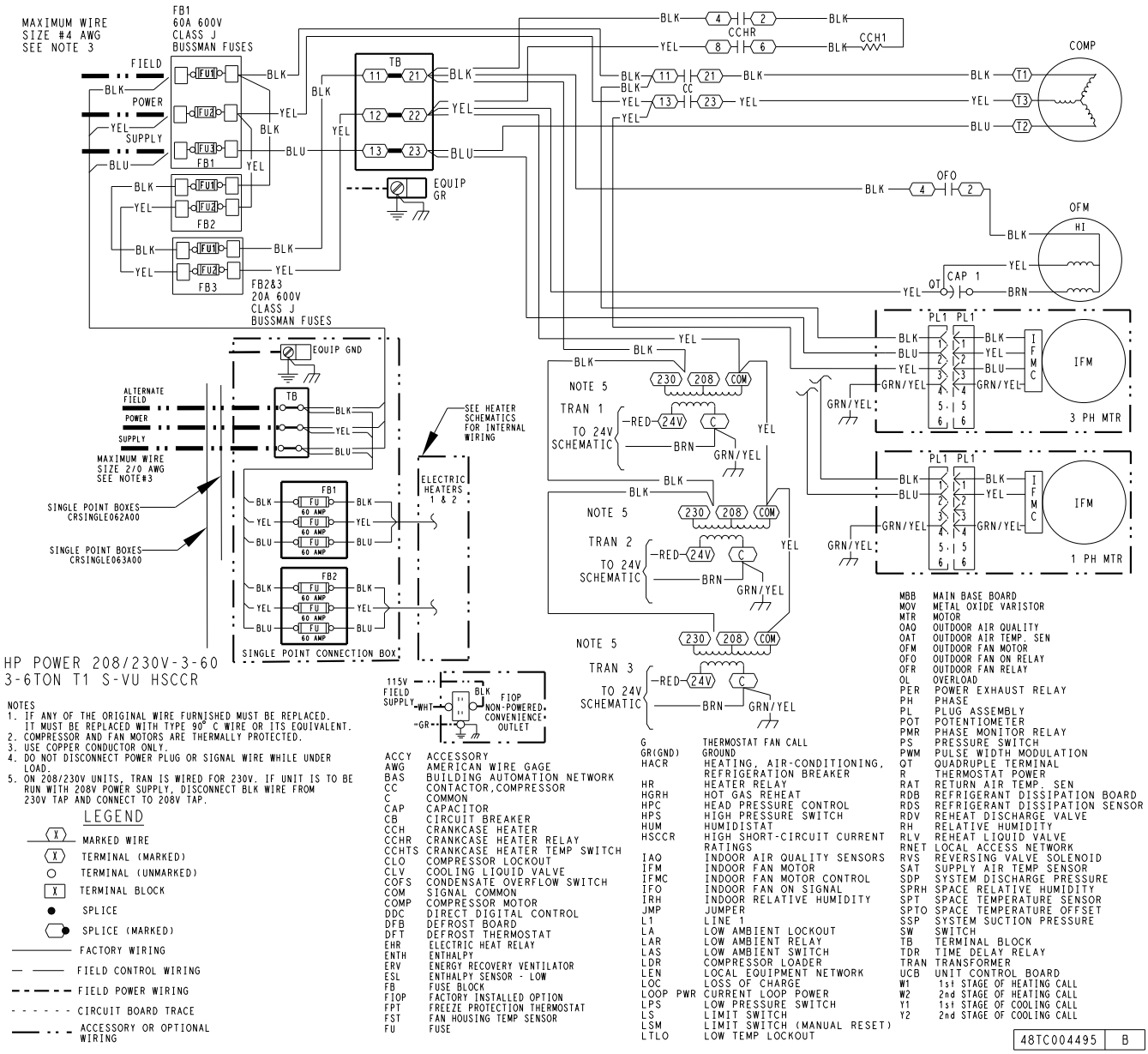

NOTES
1. IF ANY OF THE ORIGINAL WIRE FURNISHED MUST BE REPLACED. IT MUST BE REPLACED WITH TYPE 90° C WIRE OR ITS EQUIVALENT.
2. COMPRESSOR AND FAN MOTORS ARE THERMALLY PROTECTED.
3. USE COPPER CONDUCTOR ONLY.
4. DO NOT DISCONNECT POWER PLUG OR SIGNAL WIRE WHILE UNDER LOAD.
5. ON 208/230V UNITS, TRAN IS WIRED FOR 230V. IF UNIT IS TO BE RUN WITH 208V POWER SUPPLY, DISCONNECT BLK WIRE FROM 230V TAP AND CONNECT TO 208V TAP.

LEGEND

- MARKED WIRE
- TERMINAL (MARKED)
- TERMINAL (UNMARKED)
- TERMINAL BLOCK
- SPLICE
- SPLICE (MARKED)
- FACTORY WIRING
- FIELD CONTROL WIRING
- FIELD POWER WIRING
- CIRCUIT BOARD TRACE
- ACCESSORY OR OPTIONAL WIRING

ACCY	ACCESSORY
AWG	AMERICAN WIRE GAGE
BAS	BUILDING AUTOMATION NETWORK
CC	CONTACTOR,COMPRESSOR
C	COMMON
CAP	CAPACITOR
CB	CIRCUIT BREAKER
CCH	CRANKCASE HEATER
CCHR	CRANKCASE HEATER RELAY
CCHTS	CRANKCASE HEATER TEMP SWITCH
CLO	COMPRESSOR LOCKOUT
CLV	COOLING LIQUID VALVE
COFS	CONDENSATE OVERFLOW SWITCH
COM	SIGNAL COMMON
COMP	COMPRESSOR MOTOR
DDC	DIRECT DIGITAL CONTROL
DFB	DEFROST BOARD
DFT	DEFROST THERMOSTAT
EHR	ELECTRIC HEAT RELAY
ENTH	ENTHALPY
ERV	ENERGY RECOVERY VENTILATOR
ESL	ENTHALPY SENSOR - LOW
FB	FUSE BLOCK
FIOP	FACTORY INSTALLED OPTION
FPT	FREEZE PROTECTION THERMOSTAT
FST	FAN HOUSING TEMP SENSOR
FU	FUSE
G	THERMOSTAT FAN CALL
GR(GND)	GROUND
HACR	HEATING, AIR-CONDITIONING, REFRIGERATION BREAKER
HR	HEATER RELAY
HGRH	HOT GAS REHEAT
HPC	HEAD PRESSURE CONTROL
HPS	HIGH PRESSURE SWITCH
HUM	HUMIDISTAT
HSCCR	HIGH SHORT-CIRCUIT CURRENT RATINGS
IAQ	INDOOR AIR QUALITY SENSORS
IFM	INDOOR FAN MOTOR
IFMC	INDOOR FAN MOTOR CONTROL
IFO	INDOOR FAN ON SIGNAL
IRH	INDOOR RELATIVE HUMIDITY
JMP	JUMPER
L1	LINE 1
LA	LOW AMBIENT LOCKOUT
LAR	LOW AMBIENT RELAY
LAS	LOW AMBIENT SWITCH
LDR	COMPRESSOR LOADER
LEN	LOCAL EQUIPMENT NETWORK
LOC	LOSS OF CHARGE
LOOP PWR	CURRENT LOOP POWER
LPS	LOW PRESSURE SWITCH
LS	LIMIT SWITCH
LSM	LIMIT SWITCH (MANUAL RESET)
LTLO	LOW TEMP LOCKOUT
MBB	MAIN BASE BOARD
MOV	METAL OXIDE VARISTOR
MTR	MOTOR
OAQ	OUTDOOR AIR QUALITY
OAT	OUTDOOR AIR TEMP. SEN
OFM	OUTDOOR FAN MOTOR
OFO	OUTDOOR FAN ON RELAY
OFR	OUTDOOR FAN RELAY
OL	OVERLOAD
PER	POWER EXHAUST RELAY
PH	PHASE
PL	PLUG ASSEMBLY
POT	POTENTIOMETER
PMR	PHASE MONITOR RELAY
PS	PRESSURE SWITCH
PWM	PULSE WIDTH MODULATION
QT	QUADRUPLE TERMINAL
R	THERMOSTAT POWER
RAT	RETURN AIR TEMP. SEN
RDB	REFRIGERANT DISSIPATION BOARD
RDS	REFRIGERANT DISSIPATION SENSOR
RDV	REHEAT DISCHARGE VALVE
RH	RELATIVE HUMIDITY
RLV	REHEAT LIQUID VALVE
RNET	LOCAL ACCESS NETWORK
RVS	REVERSING VALVE SOLENOID
SAT	SUPPLY AIR TEMP SENSOR
SDP	SYSTEM DISCHARGE PRESSURE
SPRH	SPACE RELATIVE HUMIDITY
SPT	SPACE TEMPERATURE SENSOR
SPTO	SPACE TEMPERATURE OFFSET
SSP	SYSTEM SUCTION PRESSURE
SW	SWITCH
TB	TERMINAL BLOCK
TDR	TIME DELAY RELAY
TRAN	TRANSFORMER
UCB	UNIT CONTROL BOARD
W1	1st STAGE OF HEATING CALL
W2	2nd STAGE OF HEATING CALL
Y1	1st STAGE OF COOLING CALL
Y2	2nd STAGE OF COOLING CALL

48TC004495 | B

Fig. P — 50FEQ*04-07 SystemVu™ Power Wiring Diagram — 208/230-3-60 — High SCCR

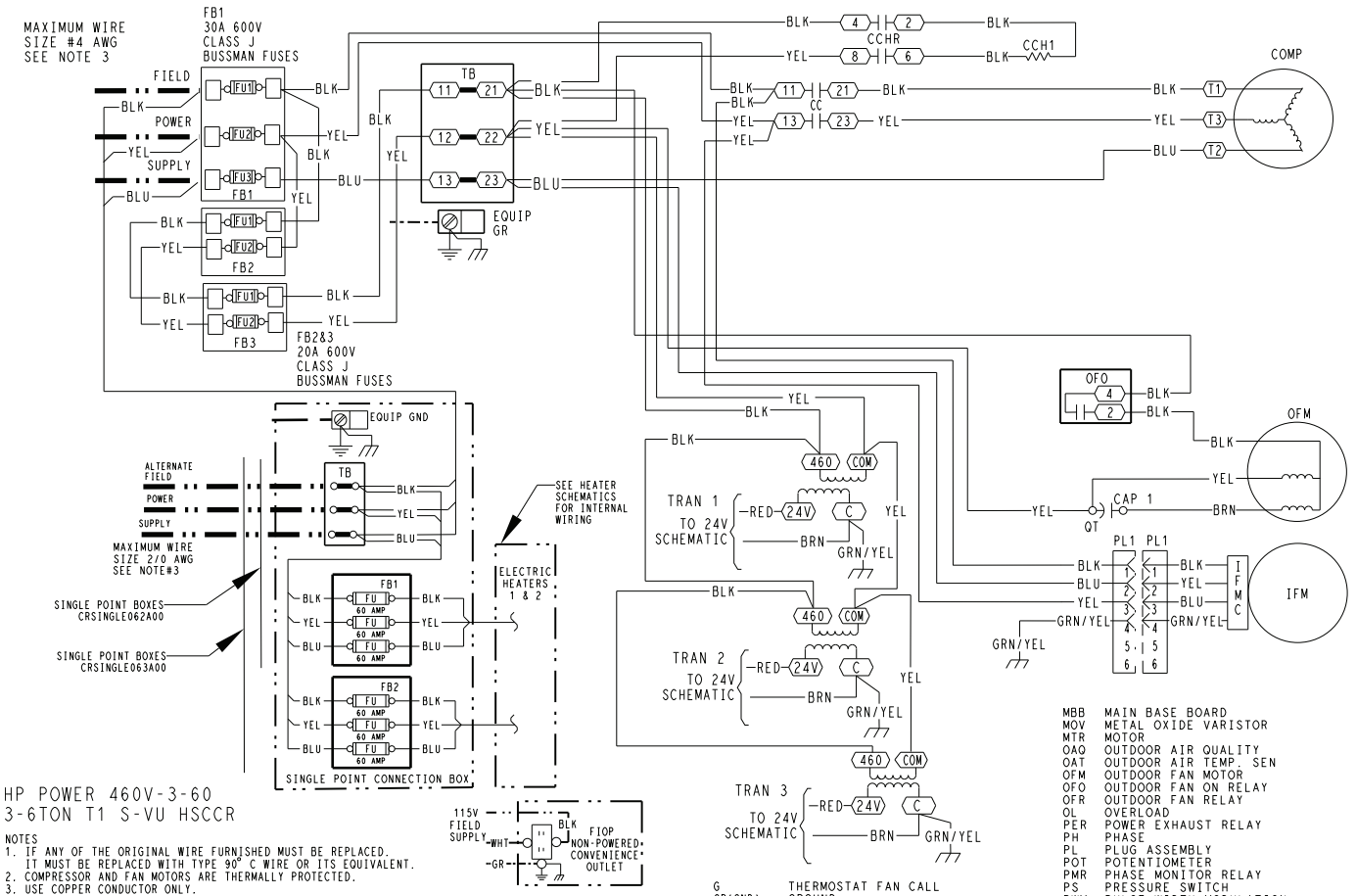

NOTES
1. IF ANY OF THE ORIGINAL WIRE FURNISHED MUST BE REPLACED. IT MUST BE REPLACED WITH TYPE 90° C WIRE OR ITS EQUIVALENT.
2. COMPRESSOR AND FAN MOTORS ARE THERMALLY PROTECTED.
3. USE COPPER CONDUCTOR ONLY.
4. DO NOT DISCONNECT POWER PLUG OR SIGNAL WIRE WHILE UNDER LOAD.
5. TRANSFORMER IS DEDICATED BASED ON UNIT VOLTAGE. TAPS ONLY SHOWN TO SIMPLIFY SCHEMATIC.

LEGEND

(X)	MARKED WIRE
(X)	TERMINAL (MARKED)
○	TERMINAL (UNMARKED)
[X]	TERMINAL BLOCK
●	SPLICE
●	SPLICE (MARKED)
———	FACTORY WIRING
— —— —	FIELD CONTROL WIRING
— — — —	FIELD POWER WIRING
- - - - - - -	CIRCUIT BOARD TRACE
— · · —	ACCESSORY OR OPTIONAL WIRING

ACCY	ACCESSORY
AWG	AMERICAN WIRE GAGE
BAS	BUILDING AUTOMATION NETWORK
CC	CONTACTOR,COMPRESSOR
C	COMMON
CAP	CAPACITOR
CB	CIRCUIT BREAKER
CCH	CRANKCASE HEATER
CCHR	CRANKCASE HEATER RELAY
CCHTS	CRANKCASE HEATER TEMP SWITCH
CLO	COMPRESSOR LOCKOUT
CLV	COOLING LIQUID VALVE
COFS	CONDENSATE OVERFLOW SWITCH
COM	SIGNAL COMMON
COMP	COMPRESSOR MOTOR
DDC	DIRECT DIGITAL CONTROL
DFB	DEFROST BOARD
DFT	DEFROST THERMOSTAT
EHR	ELECTRIC HEAT RELAY
ENTH	ENTHALPY
ERV	ENERGY RECOVERY VENTILATOR
ESL	ENTHALPY SENSOR - LOW
FB	FUSE BLOCK
FIOP	FACTORY INSTALLED OPTION
FPT	FREEZE PROTECTION THERMOSTAT
FST	FAN HOUSING TEMP SENSOR
FU	FUSE
G	THERMOSTAT FAN CALL
GR(GND)	GROUND
HACR	HEATING, AIR-CONDITIONING, REFRIGERATION BREAKER
HR	HEATER RELAY
HGRH	HOT GAS REHEAT
HPC	HEAD PRESSURE CONTROL
HPS	HIGH PRESSURE SWITCH
HUM	HUMIDISTAT
HSCCR	HIGH SHORT-CIRCUIT CURRENT RATINGS
IAQ	INDOOR AIR QUALITY SENSORS
IFM	INDOOR FAN MOTOR
IFMC	INDOOR FAN MOTOR CONTROL
IFO	INDOOR FAN ON SIGNAL
IRH	INDOOR RELATIVE HUMIDITY
JMP	JUMPER
L1	LINE 1
LA	LOW AMBIENT LOCKOUT
LAR	LOW AMBIENT RELAY
LAS	LOW AMBIENT SWITCH
LDR	COMPRESSOR LOADER
LEN	LOCAL EQUIPMENT NETWORK
LOC	LOSS OF CHARGE
LOOP PWR	CURRENT LOOP POWER
LPS	LOW PRESSURE SWITCH
LS	LIMIT SWITCH
LSM	LIMIT SWITCH (MANUAL RESET)
LTLO	LOW TEMP LOCKOUT
MBB	MAIN BASE BOARD
MOV	METAL OXIDE VARISTOR
MTR	MOTOR
OAQ	OUTDOOR AIR QUALITY
OAT	OUTDOOR AIR TEMP. SEN
OFM	OUTDOOR FAN MOTOR
OFO	OUTDOOR FAN ON RELAY
OFR	OUTDOOR FAN RELAY
OL	OVERLOAD
PER	POWER EXHAUST RELAY
PH	PHASE
PL	PLUG ASSEMBLY
POT	POTENTIOMETER
PMR	PHASE MONITOR RELAY
PS	PRESSURE SWITCH
PWM	PULSE WIDTH MODULATION
QT	QUADRUPLE TERMINAL
R	THERMOSTAT POWER
RAT	RETURN AIR TEMP. SEN
RDB	REFRIGERANT DISSIPTION BOARD
RDS	REFRIGERANT DISSIPATION SENSOR
RDV	REHEAT DISCHARGE VALVE
RH	RELATIVE HUMIDITY
RLV	REHEAT LIQUID VALVE
RNET	LOCAL ACCESS NETWORK
RVS	REVERSING VALVE SOLENOID
SAT	SUPPLY AIR TEMP SENSOR
SDP	SYSTEM DISCHARGE PRESSURE
SPRH	SPACE RELATIVE HUMIDITY
SPT	SPACE TEMPERATURE SENSOR
SPTO	SPACE TEMPERATURE OFFSET
SSP	SYSTEM SUCTION PRESSURE
SW	SWITCH
TB	TERMINAL BLOCK
TDR	TIME DELAY RELAY
TRAN	TRANSFORMER
UCB	UNIT CONTROL BOARD
W1	1st STAGE OF HEATING CALL
W2	2nd STAGE OF HEATING CALL
Y1	1st STAGE OF COOLING CALL
Y2	2nd STAGE OF COOLING CALL

48TC004496 | B

Fig. Q — 50FEQ*04-07 SystemVu™ Power Wiring Diagram — 460-3-60 — High SCCR

APPENDIX E — LOW AMBIENT CONTROL SENSOR LOCATION

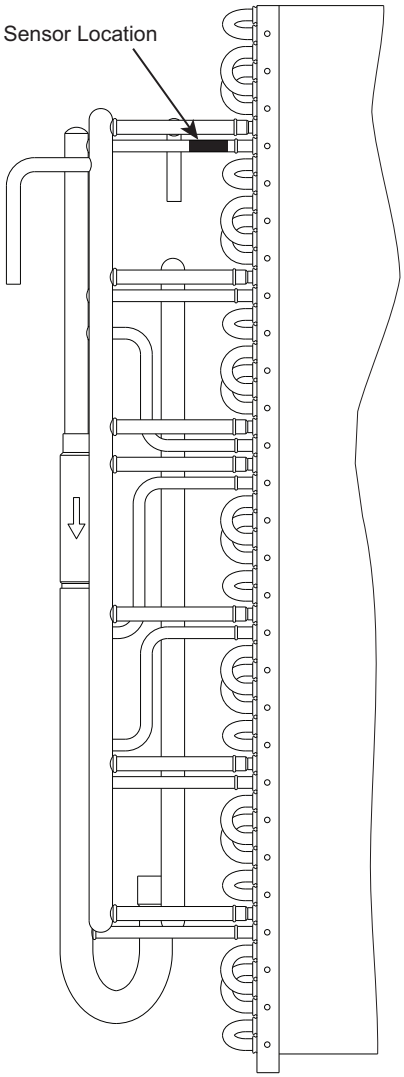

Fig. R — 50FEQ*04 Outdoor Circuiting

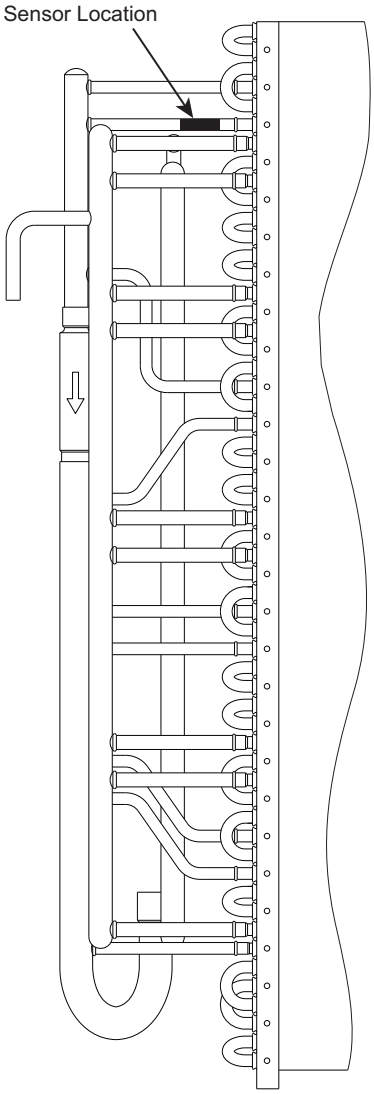

Fig. S — 50FEQ*05 Outdoor Circuiting

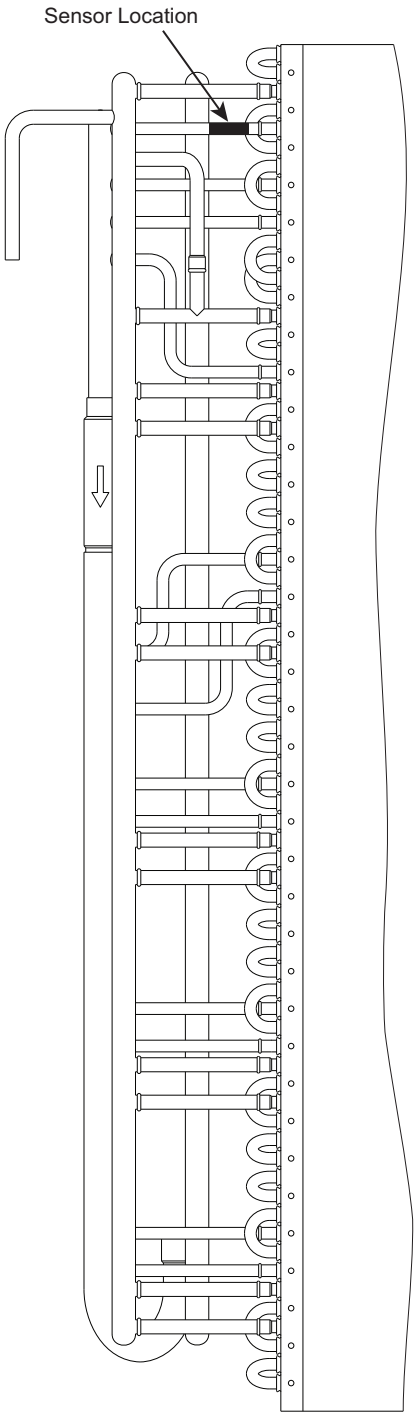

Fig. T — 50FEQ*06 Outdoor Circuiting

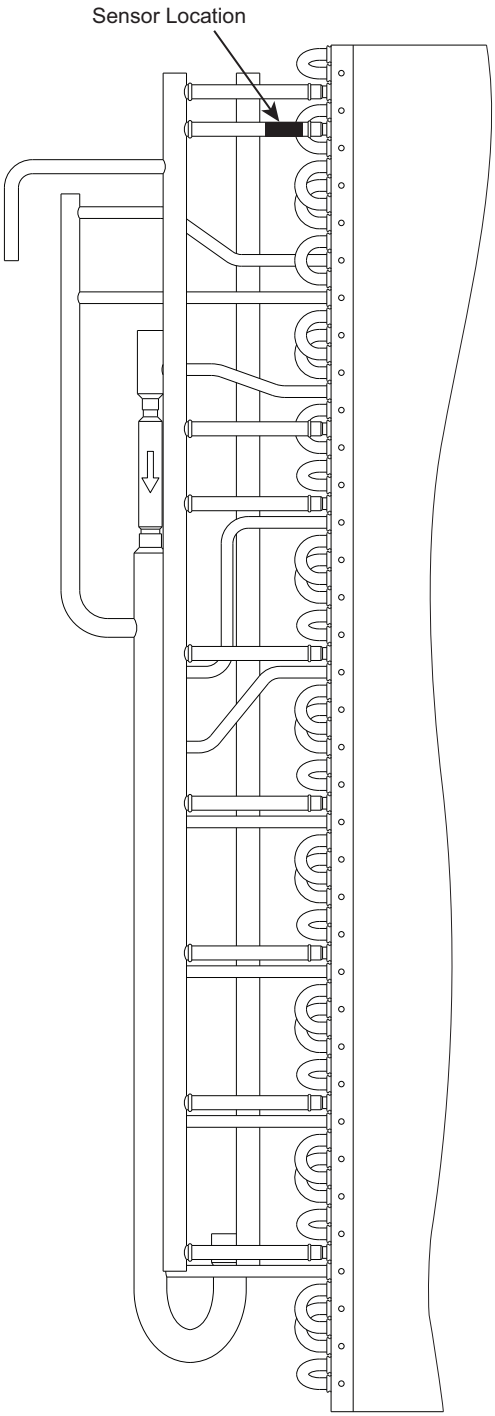

Fig. U — 50FEQ*07 Outdoor Circuiting

© 2025 Carrier

START-UP CHECKLIST

50FEQ*04-07 Single Package Rooftop Heat Pump
Electric Cooling Units

(Remove and use for job file)

NOTE: To avoid injury to personnel and damage to equipment or property when completing the procedures listed in this start-up checklist, use good judgment, follow safe practices, and adhere to the safety considerations/information as outlined in preceding sections of this service and maintenance document.

I. PRELIMINARY INFORMATION

MODEL NO. _____
JOB NAME _____
SERIAL NO. _____
ADDRESS _____
START-UP DATE _____
TECHNICIAN NAME _____
ADDITIONAL ACCESSORIES _____
_____

II. PRE-START-UP

Verify that all packaging materials have been removed from unit.	(Y/N) _____
Verify installation of outdoor air hood.	(Y/N) _____
Verify that condensate connection is installed per instructions.	(Y/N) _____
Verify that all electrical connections and terminals are tight.	(Y/N) _____
Verify ground integrity with a continuity test.	(Y/N) _____
Check that indoor-air filters are clean and in place.	(Y/N) _____
Check that outdoor air inlet screens are in place.	(Y/N) _____
Verify that unit is level.	(Y/N) _____
Verify that fan assembly is free of obstructions and rotor spins freely.	(Y/N) _____
Verify that scroll compressors are rotating in the correct direction.	(Y/N) _____
Verify yellow LED light on dissipation board is steady.	(Y/N) _____
Verify the dissipation board test button will operate the indoor fan for 1 minute.	(Y/N) _____
Verify installation of thermostat.	(Y/N) _____
Inspect and secure all wiring and tubing to prevent abrasion damage.	(Y/N) _____

III. START-UP

ELECTRICAL

Supply Voltage	L1-L2_____	L2-L3_____	L3-L1_____
Compressor Amps 1	L1 _____	L2 _____	L3 _____
Compressor Amps 2	L1 _____	L2 _____	L3 _____
Supply Fan Amps	L1 _____	L2 _____	L3 _____

TEMPERATURES

Outdoor-Air Temperature	_____ °F DB (Dry Bulb)	
Return-Air Temperature	_____ °F DB	_____ °F WB (Wet Bulb)
Cooling Supply Air Temperature	_____ °F	

PRESSURES

Refrigerant Suction _____PSIG
Refrigerant Discharge _____PSIG
Verify Refrigerant Charge using Charging Charts. (Y/N) _____

GENERAL

Economizer minimum vent and changeover settings to job requirements (if equipped). (Y/N) _____
Verify smoke detector unit shutdown by utilizing magnet test. (Y/N) _____

CUT ALONG DOTTED LINE

CUT ALONG DOTTED LINE

© 2025 Carrier