PRELIMINARY PRODUCT DATA

NOTE: Use the information in this publication for preliminary reference only.

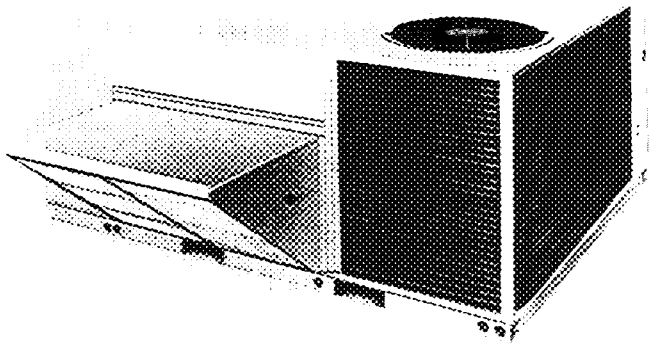

MODEL—579D WITH ECONOMIZER INSTALLED

Being the pioneer and leading manufacturer of packaged gas/electric units, we have maintained a firm commitment of providing our customers with the finest equipment that modern engineering and research can offer These packaged gas/electric commercial units were developed to meet today's heating and cooling requirements.

Model 579D is designed in one basic cabinet size, featuring a down-discharge duct configuration, and is available in a variety of heating/cooling size combinations with voltage options to meet most requirements. This model is designed for rooftop installation only.

FEATURES

FACTORY-ASSEMBLED PACKAGE is a compact, fully self-contained, combination gas heating/electric cooling unit that is prewired, prepiped, and precharged for minimum installation expense.

ENERGY-SAVING, INTERMITTENT, SPARK-IGNITION PILOT saves gas by operating only when the room thermostat "calls for heating " Standard units are furnished with natural-gas controls. A low-cost, field-installed kit for LP (propane) conversion is available for all units.

MODEL 579D UNITS with a field-installed kit meet the California maximum oxides of nitrogen (No_x) emission regulations.

RUGGED, EFFICIENT COMPRESSORS are designed for high energy efficiency Each compressor is hermetically sealed against contamination to help promote longer life and dependable operation, and vibration isolated to provide quiet operation All compressors have internal high-pressure and overcurrent protection.

ALUMINIZED STEEL BURNERS AND HEAT EXCHANGERS

HIGH-STATIC, DIRECT-DRIVE BLOWER & MULTISPEED, PSC BLOWER MOTOR on Models 579D036080 thru 579D048120, high-static, belt-drive blower on Models 579D060080 and 579D060120

DIRECT-DRIVE, PSC, CONDENSER FAN MOTORS are designed to help reduce energy consumption and provide for cooling operation down to 35°F outdoor temperature. For special cooling requirements down to 25°F or 0°F outdoor temperature, field-installed kits are available for use with all units

REFRIGERANT SYSTEM is designed to provide dependability. Capillary tubes and a liquid tube filter-drier are used to promote clean, unrestricted operation Each unit leaves the factory with a full refrigerant charge. Refrigerant service connections make checking operating pressures easier.

UNIT DESIGN — Indoor and outdoor coils are computer-designed for optimum heat transfer and cooling efficiency. Vertical outdoor fan discharge carries sound and air up and away Four-pass tubular furnace heat exchangers are designed for years of quiet, efficient service. Heavy-duty base rails provide for extra support and feature forklift slots for easier and safer handling before installation

WEATHERIZED CABINETS are constructed of heavy-duty, phosphated, zinc-coated steel and finished with corrosion and fade-resistant, baked enamel. Interior surfaces of the evaporator/heat exchanger compartment are insulated to help keep the conditioned air from being affected by the outdoor ambient temperature.

ACCESSORIES & OPTIONS are available to meet the requirements of a variety of applications See the Optional Equipment Tables in this publication.

DIMENSIONAL DRAWING
MODEL 579D—SIZES 036080 THRU 060120

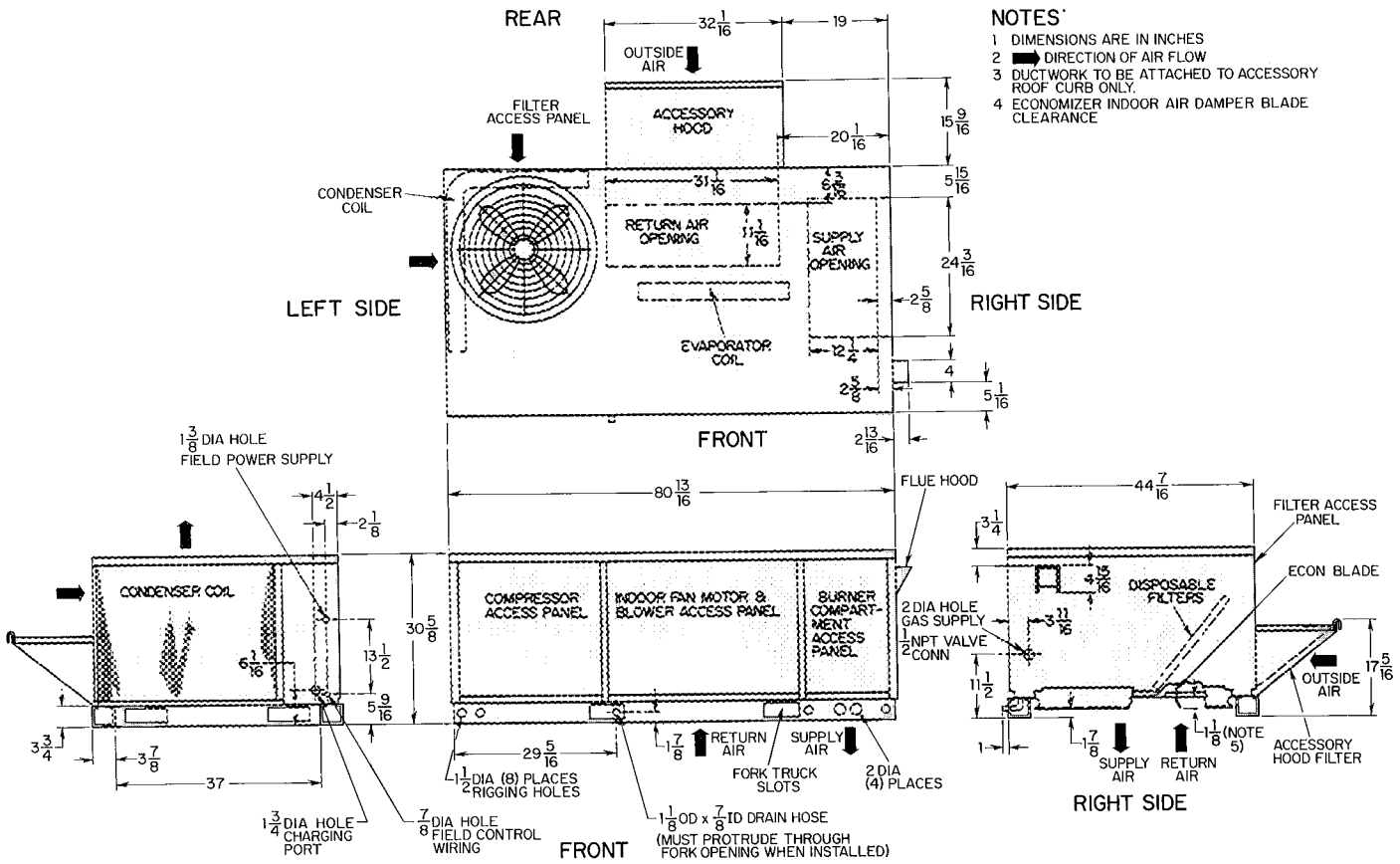

NOTES:
1. DIMENSIONS ARE IN INCHES
2. ➡ DIRECTION OF AIR FLOW
3. DUCTWORK TO BE ATTACHED TO ACCESSORY ROOF CURB ONLY.
4. ECONOMIZER INDOOR AIR DAMPER BLADE CLEARANCE

579D REQUIRED CLEARANCES (Inches)

Top of unit	72
Front and rear sides	48
Flue discharge side	48
Opposite flue side	48

NOTE: Provision must be made for fresh ambient air to reach the outdoor coil without recirculation of the air from the outdoor fan discharge.

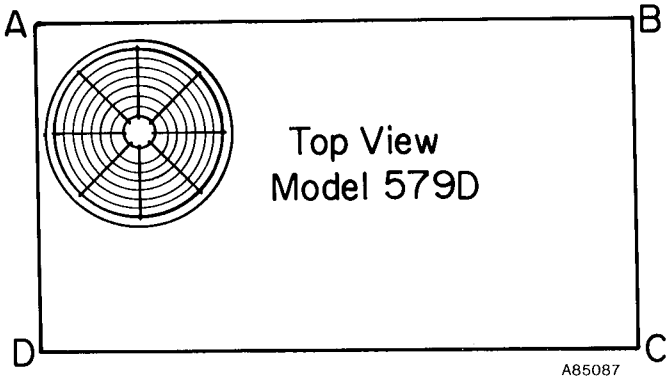

579D WEIGHTS

Size	Shipping Wt (lbs)	Operating Wt (lbs)	Corner Wt (lbs) A	B	C	D
036080	650	630	129	126	186	189
048080	650	630	129	126	186	189
048120	670	650	133	130	192	195
060080	660	640	131	128	189	192
060120	680	660	135	132	195	198

NOTE: Economizer Weight is 25 lbs
Roof Curb Weight is 130 lbs

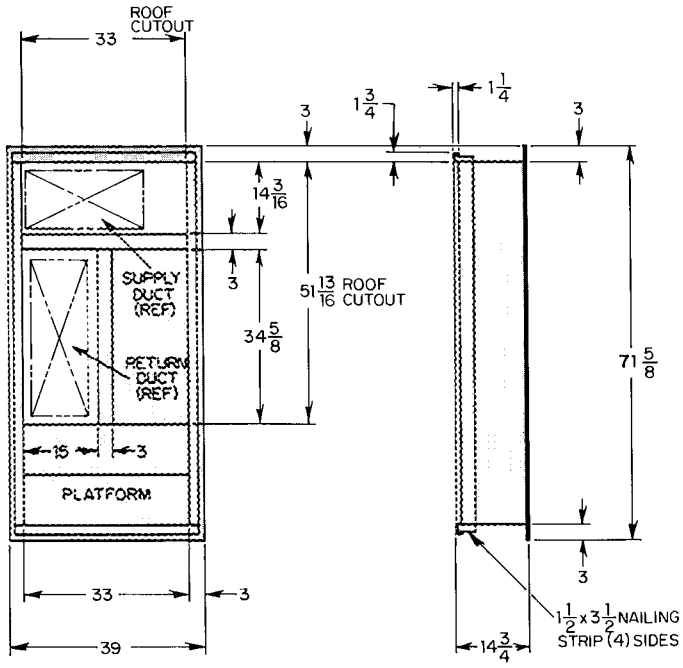

ROOF-MOUNTING CURB

PRELIMINARY SPECIFICATIONS—MODEL 579D—SIZES 036080 THRU 048120

Model	579DJ036080	579DP036080	579DE036080	579DJ048080	579DP048080	579DE048080	579DJ048120	579DP048120
Series	A	A	A	A	A	A	A	A
RATINGS & PERFORMANCE								
Cooling								
Rated Capacity (Btuh) Nominal	37,000	37,000	37,000	47,000	47,000	47,000	47,000	47,000
Rated Airflow (Ft^3/Min)	1200	1200	1200	1500	1500	1500	1500	1500
Rated External Static Pressure (In. wc)	0.90	0.90	0.90	0.55	0.55	0.55	0.55	0.55
Rated Load Watts	4567	4567	4567	5949	5949	5949	5949	5949
SEER	8.1	8.1	8.1	8.0	8.0	8.0	8.0	8.0
EER	—	7.8	7.8	—	7.9	7.9	—	7.9
ARI Sound Rating	8.8	8.8	8.8	8.8	8.8	8.8	8.8	8.8
Heating								
Rated Input(Btuh)	80,000	80,000	80,000	80,000	80,000	80,000	120,000	120,000
Output Capacity (Btuh)	61,600	61,600	61,600	61,600	61,600	61,600	92,400	92,400
Steady State Efficiency %	77	77	77	77	77	77	77	77
AFUE %	75	75	75	75	75	75	76	76
California Seasonal Efficiency %	72	72	72	72	72	72	73	73
Temperature Rise Range (°F)	30—60	30—60	30—60	35—65	35—65	35—65	35—65	35—65
Airflow (Ft^3/Min)	1200	1200	1200	1500	1500	1500	1500	1500
Rated External Static Pressure (In. wc)	0.80	0.80	0.80	0.40	0.40	0.40	0.40	0.40
ELECTRICAL DATA								
Unit Volts—Phase (60 Hz)	208-230—1	208/230—3	460—3	208-230—1	208/230—3	460—3	208-230—1	208/230—3
Operating Voltage Range	197-253	187-253	414-506	197-253	187-253	414-506	197-253	187-253
Unit Full Load Amps	30.4	23.3	11.6	37.9	28.1	14.2	37.9	28.1
Minimum Ampacity for Wire Sizing**	40	30	15	46	35	20	46	35
Minimum Wire Size (75°C Copper)**	8	10	14	8	8	10	8	8
Maximum Wire Length (Ft)**	95	105	155	80	125	195	80	100
Maximum Fuse Size (Amps)	50	45	25	60	45	25	60	45
Control Transformer - 24-V (VA)	75	75	75	75	75	75	75	75
External Control Power Available Heating/Cooling (VA)	54.7/50.5							
COMPRESSOR, REFRIGERANT, & CONTROLS								
Compressor Type	Hermetic							
RPM	3500							
Rated Load Amps	22.2	15.1	7.6	28.1	18.3	9.2	28.1	18.3
Locked Rotor Amps	118	100	36.5	106	105	35	106	105
Temperature & Overcurrent Protection	Internal							
Low-Ambient Operation (°F)††	35							
Refrigerant Charge (R-22)	5.1 lbs			4.8 lbs				
INDOOR COIL								
Rows & Fins per Inch	2 & 13.9							
Height & Width (In.)	29.5 x 26							
Face Area (Ft^2	5.3							
Refrigerant Metering Device	Capillary Tubes							
INDOOR BLOWER & MOTOR								
Wheel Diameter & Width (In.)	10 x 10							
Required Filter								
Disposable - Shipped with unit (Qty)	16 x 25 x 1 (1) & 20 x 25 x 1 (1)							
Disposable - Field Supplied (Qty)	16 x 25 x 2 (1) & 20 x 25 x 2 (1)							
Motor HP & Speeds (No.)	3/4 (2)							
Nominal Speed	1050							
Type & Service Factor	Direct Drive & 1.25							
Full Load Amps	6.9	6.9	3.5	6.9	6.9	3.5	6.9	6.9
OUTDOOR COIL								
Rows & Fins per Inch	2 & 17			2 & 17			2 & 17	
Face Area (Sq Ft)	6.3			6.3			6.3	
OUTDOOR FAN & MOTOR								
Fan Diameter (In.)	22			22			22	
Motor HP (DD, PSC) & Speeds (No.)	1/3 & 1			1/2 & 1			1/2 & 1	
Nominal Speed (RPM)	850			1075			1075	
Full Load Amps	1.3	1.3	0.5	2.9	2.9	1.5	2.9	2.9
Nominal Condenser Airflow (Ft^3/Min)	2200			3100				
GAS CONTROLS & GENERAL DATA								
Burners (No.)	2			2			3	
Burner Orifices (No. - Drill Size), Natural Gas	2(32)			2(32)			3(32)	
Burner Orifices (No. - Drill Size), Propane Gas	2(49)			2(49)			3(49)	
Main Gas Valve	Redundant							
Pilot Ignition	Intermittent Spark							
High Limit	Automatic Reset							

**If other than 75°C copper wire is used, determine size from unit ampacity and the National Electrical Code. Voltage drop of wire must be less than 2% of unit rated voltage. Maximum wire length is for one way along the wire path from unit to service panel

††See "Optional Equipment Tables" for 25°F and 0°F low-ambient kits that are available

PRELIMINARY SPECIFICATIONS—MODEL 579D—SIZES 048120 THRU 060120

MODEL	579DE048120	579DB060080	579DP060080	579DE060080	579DB060120	579DP060120	579DE060120
SERIES	A	A	A	A	A	A	A
RATINGS & PERFORMANCE							
Cooling							
Rated Capacity (Btuh)	47,000	59,000	59,000	59,000	59,000	59,000	59,000
Rated Airflow (Ft³/Min)	1500	2000	2000	2000	2000	2000	2000
Rated External Static Pressure (In. wc)	0.55	0.70	0.70	0.70	0.70	0.70	0.70
Rated Load Watts	5949	7973	7973	7973	7973	7973	
SEER	8.0	8.0	8.0	8.0	8.0	8.0	8.0
EER	7.9	—	7.4	7.4	—	7.4	7.4
ARI Sound Rating	8.8	8.8	8.8	8.8	8.8	8.8	8.8
Heating							
Rated Input (Btuh)	120,000	80,000	80,000	80,000	120,000	120,000	120,000
Output Capacity (Btuh)	92,400	61,600	61,600	61,600	92,400	92,400	92,400
Steady State Efficiency %	77	77	77	77	77	77	77
AFUE %	76	75	75	74	76	76	76
California Seasonal Efficiency %	73	72	72	72	73	73	73
Temperature Rise Range (°F)	35-65	35-65	35-65	35-65	35-65	35-65	35-65
Airflow (Ft³/Min)	1500	2000	2000	2000	2000	2000	2000
Rated External Static Pressure (In. wc)	0.40	0.35	0.35	0.35	0.35	0.35	0.35
ELECTRICAL DATA							
Unit Volts—Phase (60-Hz)	460—3	230—1	208/230—3	460—3	230—1	208/230—3	460—3
Operating Voltage Range	414—506	207—253	187—253	414-506	207—253	187—253	414-506
Unit Full Load Amps	14.2	38.9	28.6	14.3	38.9	28.6	14.3
Minimum Ampacity for Wire Sizing**	20	55	40	20	55	40	20
Minimum Wire Size (75°C Copper)**	12	6	8	12	6	8	12
Maximum Wire Length (Ft)	195	125	125	195	125	125	195
Maximum Fuse Size (Amps)	25	50	45	25	50	45	25
Control Transformer—24-V (VA)	75	75	75	75	75	75	75
External Control Power Available Heating/Cooling (VA)	54.7/50.5						
COMPRESSOR, REFRIGERANT, & CONTROLS							
Compressor Type	Hermetic						
RPM	3500						
Rated Load Amps	9.2	28.5	20.9	10.4	28.5	20.9	10.4
Lock Rotor Amps	35	130	98	49	130	98	49
Temperature & Overcurrent Protection	Internal						
Low-Ambient Operation (°F)††	35						
Refrigerant Charge (R-22)	4.8	7.2					
INDOOR COIL							
Rows & Fins per Inch	2 & 13.9	3 & 13.9					
Height & Width (In.)	26 & 29.5	26 & 29.5					
Face Area (Ft²)	5.3						
Refrigerant Metering Device	Capillary Tubes						
INDOOR BLOWER & MOTOR							
Wheel Diameter & Width (In.)	10 x 10	11 x 10					
Required Filter							
Disposable—Shipping With Unit (Qty)	16 x 25 x 1 (1) & 20 x 25 x 1 (1)						
Disposable—Field Supplied (Qty)	16 x 25 x 2 (1) & 20 x 25 x 1 (1)						
Motor HP & Speeds (No.)	3/4 (2)	1 (1)					
Nominal Speed	1050	1725					
Type & Service Factor	Direct Drive & 1.25	Belt Drive & 1.25					
Full Load Amps	3.5	7.5	4.8	2.4	7.5	4.8	2.4
OUTDOOR COIL							
Rows & Fins per Inch	2 & 17	2 & 13.9					
Face Area (Sq Ft)	6.3	9.7					
OUTDOOR FAN & MOTOR							
Fan Diameter (In.)	22	22			22		
Motor HP (DD, PSC) & Speeds (No.)	1/2 & 1	1/2 & 1			1/2 & 1		
Nominal Speed (RPM)	1075	1075			1075		
Full Load Amps	1.5	2.9	2.9	1.5	2.9	2.9	1.5
Nominal Condenser Airflow (Ft³/Min)	3100	3800					
GAS CONTROLS & GENERAL DATA							
Burners (No.)	3	2			3		
Burner Orifices (No.-Drill Size), Natural Gas	3-32	2-32			3-32		
Burner Orifices (No.-Drill Size), Propane Gas	3-49	2-49			3-49		
Main Gas Valve	Redundant						
Pilot Ignition	Intermittent Spark						
High Limit	Automatic Reset						

(Applicable notes are listed below first "Specifications" table.)

OPTIONAL EQUIPMENT

Description		Part Number
25°F Low-Ambient Kit		309428-101
0°F Low-Ambient Kit	208-230-V	307183-101
	460-V	307183-102
Propane Conversion Kit		309425-101
Low No_x Kit (California)		309424-101

SYSTEM ACCESSORIES

Description	Part Number
Roof Curb	309428-101
Modulating Economizer With Enthalpy Control	309421-101
Two-Position Damper	309422-101
50% Manual Damper	309423-101

PRELIMINARY DETAILED NET COOLING CAPACITIES

579D036080

Evaporator Air		CONDENSER ENTERING AIR TEMPERATURE (°F)																				
		85					95					105					115					
Ft³ per Min	°F WB	Capacity MBtuh Total	Capacity MBtuh Sens	Total Sys KW	LDB	LWB	Capacity MBtuh Total	Capacity MBtuh Sens	Total Sys KW	LDB	LWB	Capacity MBtuh Total	Capacity MBtuh Sens	Total Sys KW	LDB	LWB	Capacity MBtuh Total	Capacity MBtuh Sens	Total Sys KW	LDB	LWB
1000	71	41 3	21 2	4 60	60 3	58 5	39 1	20 3	4 79	61 1	59 3	36 7	19 4	4 97	61 9	60 1	34 3	18 5	5 15	62 8	60 9
	67	38 5	25 2	4 41	56 5	54 3	36 3	24 3	4 59	57 4	55 1	34 1	23 4	4 76	58 2	55 9	31 8	22 4	4 93	59 1	56 7
	63	35.6	29.2	4.22	52.8	40.0	33.5	28.3	4.39	53.7	50.8	31.5	27.3	4.55	54.5	51.7	29.3	26.4	4.71	55.4	52.5
1200 (.18)	71	42 2	22 4	4 75	62 6	60 6	39 8	21 5	4 94	63 3	61 3	37 3	20 6	5 13	64 0	61 9	34 9	19 7	5 31	64 7	62 6
	67	39.3	27 1	4 56	59 0	56.4	37 0	26 1	4 74	59 7	57 1	34 8	25 2	4 92	60 4	57 7	32 4	24 3	5 08	61 1	58 4
	63	36.4	31.7	4.37	55.4	52.1	34.2	30.8	4.54	56.1	52.8	32.4	29.9	4.70	56.8	53.4	30.0	28.9	4.86	57.6	54.2
1400	71	42 9	23 5	4 88	64 3	62 1	40 3	22 6	5 08	65 0	62 7	37 8	21 7	5 27	65 6	63 2	35 3	20 8	5 45	66 2	63 8
	67	40 0	28 8	4 69	60 8	57 9	37 6	27 9	4 88	61 5	58 5	35 3	27 0	5 05	62 0	59 0	32 8	26 0	5 22	62 7	59 6
	63	37.1	34.1	4.51	57.3	53.6	34.8	33.1	4.68	58.0	54.3	32.8	32.3	4.84	58.5	54.0	30.3	30.3	4.99	59.2	55.5

579D048080 & 120

Evaporator Air		CONDENSER ENTERING AIR TEMPERATURE (°F)																				
		85					95					105					115					
Ft³ per Min	°F WB	Capacity MBtuh Total	Capacity MBtuh Sens	Total Sys KW	LDB	LWB	Capacity MBtuh Total	Capacity MBtuh Sens	Total Sys KW	LDB	LWB	Capacity MBtuh Total	Capacity MBtuh Sens	Total Sys KW	LDB	LWB	Capacity MBtuh Total	Capacity MBtuh Sens	Total Sys KW	LDB	LWB
1400	71	53 2	27 5	5 76	62 0	59 9	49 8	26 2	6 03	62 9	60 7	46 2	24 8	6 28	63 8	61 5	42 6	23 5	6 49	64 6	62 3
	67	49 4	32 9	5 55	58 5	55 7	46 2	31 5	5 80	59 4	56 5	42 8	30 1	6 02	60 3	57 3	39 3	28 7	6 21	61 2	58 2
	63	45.5	38.0	5.35	55.2	51.6	42.4	36.5	5.58	56.1	52.5	39.4	35.1	5.78	57.0	53.3	36.3	33.6	5.94	58.0	54.1
1600 (.20)	71	54 2	28 7	5 91	63 6	61 2	50 6	27 3	6 18	64 4	61 9	46 9	26 0	6 43	65 1	62 7	43 2	24 6	6 65	65 9	63 4
	67	50.4	34 7	5 70	60 2	57 0	47 0	33 3	5 95	61 0	57 8	43 5	31 9	6 17	61 8	58 5	39 9	30 5	6 36	62 6	59 3
	63	46.4	40.4	5.50	56.9	52.9	43.3	38.9	5.73	57.8	53.7	40.2	37.3	5.94	58.6	54.4	37.1	35.7	6.11	59.6	55.1
1800	71	54 9	29.8	6 04	64 9	62 3	51 2	28 4	6 32	65 5	62 9	47 4	27 0	6 57	66 2	63 6	43 5	25 7	6 79	66 9	64 2
	67	51 1	36 4	5 84	61:5	58 1	47 6	35 0	6 09	62 2	58 8	44 0	33 6	6 31	62 9	59 4	40 3	32 1	6 50	63 7	60 1
	63	47.2	42.6	5.64	58.3	54.0	44.0	41.0	5.87	59.2	54.7	40.8	39.3	6.09	60.0	55.3	37.7	37.3	6.28	61.0	55.9

579D060080 & 120

Evaporator Air		CONDENSER ENTERING AIR TEMPERATURE (°F)																				
		85					95					105					115					
Ft³ per Min	°F WB	Capacity MBtuh Total	Capacity MBtuh Sens	Total Sys KW	LDB	LWB	Capacity MBtuh Total	Capacity MBtuh Sens	Total Sys KW	LDB	LWB	Capacity MBtuh Total	Capacity MBtuh Sens	Total Sys KW	LDB	LWB	Capacity MBtuh Total	Capacity MBtuh Sens	Total Sys KW	LDB	LWB
1800	71	66 7	35 2	7 72	61 5	59 8	62 7	33 7	8 10	62 3	60 6	58 5	32 2	8 46	63 1	61 3	54 2	30 6	8 80	63 9	62 1
	67	62 2	42.7	7 45	57 6	55 5	58.4	41.1	7 80	58 4	56 3	54 4	39 5	8.13	59 3	57 1	50 4	37 9	8 43	60 1	57 9
	63	57.6	49.8	7.19	53.9	51.4	54.0	48.1	7.52	54.8	52.2	50.6	46.4	7.84	55.7	53.0	47.2	44.7	8.13	56.6	53.7
2000 (.13)	71	67 5	36 4	7 89	62 8	60 9	63 3	35 0	8 27	63 5	61 6	59 0	33 4	8 63	64 2	62 3	54 7	31 9	8 96	65 0	53 0
	67	63 0	44 7	7 61	58 9	56 7	59 0	43 1	7 97	59 7	57 4	55 0	41 5	8 30	60 4	58 1	50 8	39 9	8 61	61 2	58 8
	63	58.4	52.3	7.36	55.3	52.5	54.8	50.5	7.70	56.2	53.2	51.3	48.8	8.03	57.0	53.9	47.9	46.8	8.32	57.9	54.6
2200	71	68 1	37 8	8 05	63 8	61 8	63 8	36 2	8 43	64 5	62 5	59 4	34 7	8 79	65 1	63 1	33 1	9 13	65 8	63 8	
	67	63 6	46 6	7 77	60 0	57 6	59 5	45 0	8 13	60 7	58 3	55 4	43 4	8 46	61 4	58.9	51 2	41 7	8 77	62 1	59 6
	63	59.1	54.7	7.52	56.5	53.4	55.4	52.8	7.87	57.4	54.1	52.0	50.8	8.20	58.2	54.7	48.6	48.4	8.51	59.2	55.3

NOTES:

1. Sensible heat capacities shown are based on 80°F DB entering air at the evaporator coil For sensible capaities at other than 80°F DB, deduct 84 Btuh per 1000 Ft³/Min of evaporator coil air for each degree below 80°F, or add 84 Btuh per 100 Ft³/Min of evaporator coil air per degree above 80°F
2. Total system KW includes compressor, fan, and blower motor KW
3. Parenthetical numbers in evaporator airflow column indicate the bypass factor.

MODEL 579D AIR DELIVERY (Ft³/Min) AT INDICATED EXTERNAL STATIC PRESSURE & VOLTAGE (Sizes 036080 Thru 048120)

Size	Unit Volts—Phase (60-Hz)	Blower Motor Speed	Coil	External Static Pressure—Inches wc																	
				208V									230V or 460V								
				0.1	0.2	0.3	0.4	0.5	0.6	0.7	0.8	0.9	0.1	0.2	0.3	0.4	0.5	0.6	0.7	0.8	0.9
036080	208-230 (1)	Low	Dry	1715	1660	1600	1540	1470	1385	1295	1200	1100	1830	1755	1680	1600	1515	1425	1325	1225	1110
	208/230 (3)		Wet	1705	1650	1595	1530	1455	1370	1285	1190	1090	1815	1745	1670	1585	1500	1400	1300	1205	1100
	460 (3)	High	Dry	1860	1790	1710	1640	1560	1790	1400	1315	1215	1875	1810	1740	1670	1600	1530	1450	1350	1260
			Wet	1850	1780	1700	1630	1550	1480	1390	1300	1200	1860	1800	1725	1660	1595	1515	1440	1345	1250
048080 and 048120	208-230 (1)	Low	Dry	1700	1650	1580	1505	1435	1350	1245	1135	—	1865	1800	1725	1630	1530	1420	1300	1160	—
	208/230 (3)		Wet	1690	1630	1570	1500	1425	1340	1230	—	—	1850	1790	1700	1610	1510	1400	1285	1140	—
	460 (3)	High	Dry	1890	1815	1740	1665	1570	1470	1340	1220	—	1905	1845	1780	1700	1600	1505	1395	1270	1130
			Wet	1875	1800	1725	1645	1550	1445	1330	1200	—	1890	1830	1765	1685	1590	1490	1375	1245	1110

MODEL 579D AIR DELIVERY (Ft³/Min) AT INDICATED EXTERNAL STATIC PRESSURE & PULLEY TURNS OPEN (Sizes 060080 AND 060120)

Pulley Turns Open	Coil	External Static Pressure—Inches wc												
		0.1	0.2	0.3	0.4	0.5	0.6	0.7	0.8	0.9	1.0	1.1	1.2	1.3
0	Dry	—	—	—	—	—	2615	2570	2500	2425	2340	2245	2145	2040
	Wet	—	—	—	—	—	2590	2540	2460	2385	2300	2210	2110	2005
1.5	Dry	—	—	2660	2600	2530	2450	2360	2260	2140	2020	1900	—	—
	Wet	—	—	2635	2570	2500	2410	2325	2230	2110	1990	1865	—	—
3	Dry	2595	2515	2440	2360	2275	2165	2050	1910	—	—	—	—	—
	Wet	2550	2480	2400	2330	2245	2140	2010	1880	—	—	—	—	—
5	Dry	2285	2180	2075	1970	1835	—	—	—	—	—	—	—	—
	Wet	—	2150	2050	1925	1800	—	—	—	—	—	—	—	—

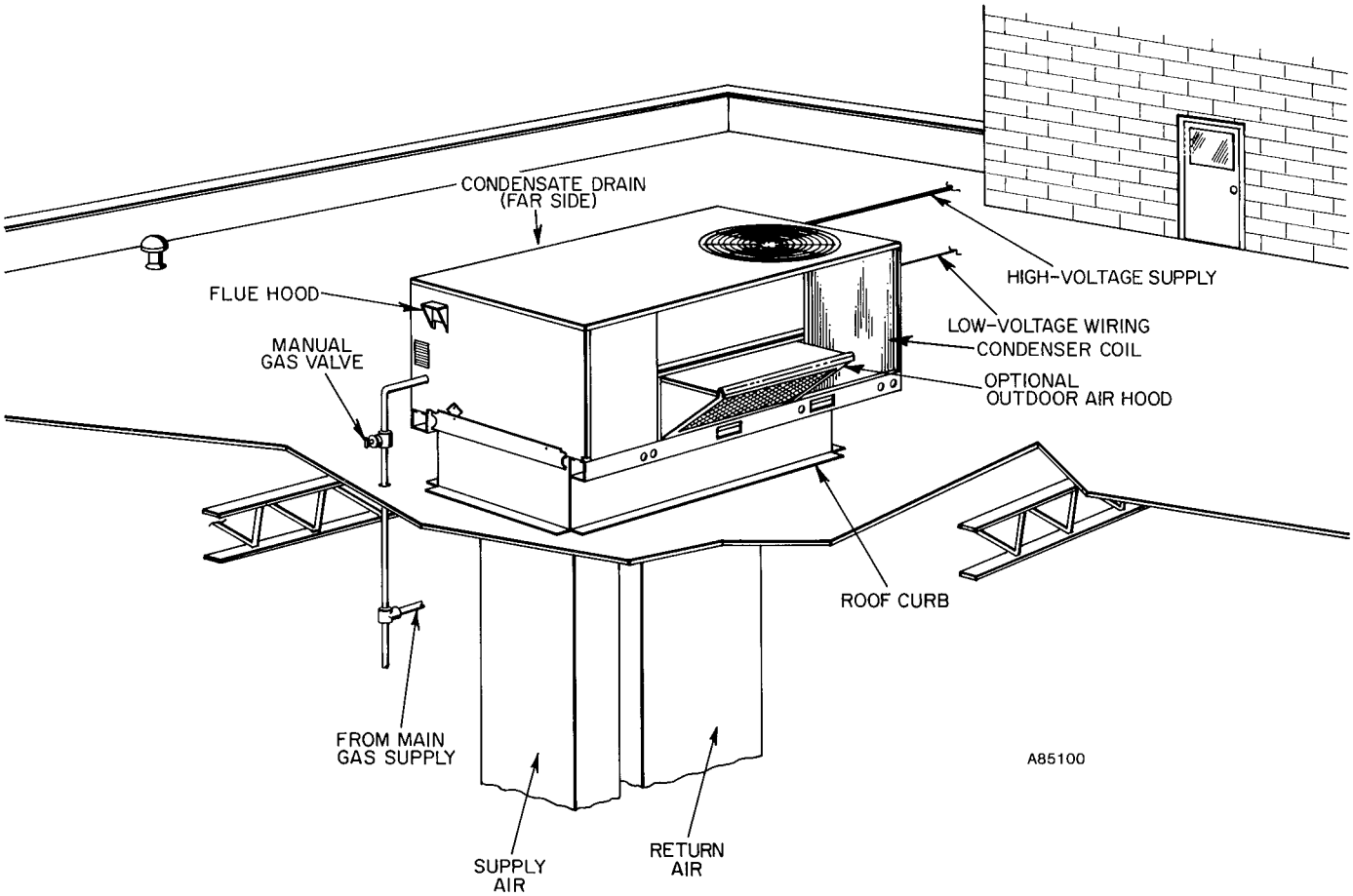

579D TYPICAL ROOFTOP INSTALLATION

day & night

Day&Night Air Conditioning

BDP Company
Indianapolis, IN
City of Industry, CA

SPECIFICATIONS SUBJECT TO CHANGE WITHOUT NOTICE

UNIT MUST BE INSTALLED IN ACCORDANCE WITH INSTALLATION INSTRUCTIONS