COMMERCIAL UNITARY SYSTEMS

Installation, Start-Up and Service Instructions

CONTENTS

Page
SAFETY CONSIDERATIONS 1
INSTALLATION 1-31
Step 1 — Provide Unit Support 1
• ROOF CURB
• ALTERNATE UNIT SUPPORT
Step 2 — Rig and Place Unit 8
• POSITIONING
• ROOF MOUNT
Step 3 — Field Fabricate Ductwork 11
Step 4 — Make Unit Duct Connections 11
Step 5 — Trap Condensate Drain 11
Step 6 — Controls Options 12
• CONSTANT VOLUME APPLICATIONS
• VARIABLE AIR VOLUME (VAV) APPLICATIONS
Step 7 — Make Electrical Connections 15
• POWER WIRING
• FIELD POWER SUPPLY
• FIELD CONTROL WIRING
Step 8 — Make Outdoor-Air Inlet Adjustments 25
• ECONOMIZER
• ECONOMIZER SETTINGS
Step 9 — Position Power Exhaust/ Barometric Relief Damper Hood 29
Step 10 — Install Accessories 30
START-UP 32-42
SERVICE 42-45
TROUBLESHOOTING 46-51
START-UP CHECKLIST CL-1, CL-2

SAFETY CONSIDERATIONS

Installation and servicing of air-conditioning equipment can be hazardous due to system pressure and electrical components. Only trained and qualified service personnel should install, repair, or service air-conditioning equipment.

Untrained personnel can perform basic maintenance functions of cleaning coils and filters and replacing filters. All other operations should be performed by trained service personnel. When working on air-conditioning equipment, observe precautions in the literature, tags and labels attached to the unit, and other safety precautions that may apply.

Follow all safety codes. Wear safety glasses and work gloves. Use quenching cloth for unbrazing operations. Have fire extinguishers available for all brazing operations.

⚠ WARNING

Before performing service or maintenance operations on unit, turn off main power switch to unit. Electrical shock could cause personal injury.

IMPORTANT — READ BEFORE INSTALLING

IMPORTANT: Due to upgrades in unit control software and hardware, units produced currently are slightly different than original design units. The unit control software (which has changed) is designated with a sticker on the unit control board, chip U8 (the large chip in the center of the board), which states the software Version number. Version 1.0 is the original version. Version 2.0 is the current version. Differences in installation, configuration, and start-up procedures in this manual will be identified by Version number.

INSTALLATION

Step 1 — Provide Unit Support

⚠ CAUTION

All panels must be in place when rigging. Unit is not designed for handling by fork truck.

ROOF CURB — Assemble and install accessory roof curb in accordance with instructions shipped with the curb. Accessory roof curb and information required to field fabricate a roof curb or horizontal adapter are shown in Fig. 1 and 2. Install insulation, cant strips, roofing, and counter flashing as shown. Ductwork can be secured to roof curb before unit is set in place.

IMPORTANT: The gasketing of the unit to the roof curb is critical for a leak-proof seal. Install gasket supplied with the roof curb as shown in Fig. 1. Improperly applied gasket can result in air leaks and poor unit performance.

Curb should be level. This is necessary to permit unit drain to function properly. Unit leveling tolerance is shown in Fig 1 and 2. Refer to Accessory Roof Curb Installation Instructions for additional information as required. When accessory roof curb is used, unit may be installed on class A, B, or C roof covering material.

ALTERNATE UNIT SUPPORT — When the curb or adapter cannot be used, support unit with sleepers using unit curb or adapter support area. If sleepers cannot be used, support long sides of unit (refer to Fig. 3-6) with a minimum number of equally spaced 4-in. x 4-in. pads as follows: 50EJ,EK,EW,EY024-034 units require 3 pads on each side; 50EJ,EK,EW,EY038-048 require 4 pads on each side. Unit may sag if supported by corners only.

Manufacturer reserves the right to discontinue, or change at any time, specifications or designs without notice and without incurring obligations.

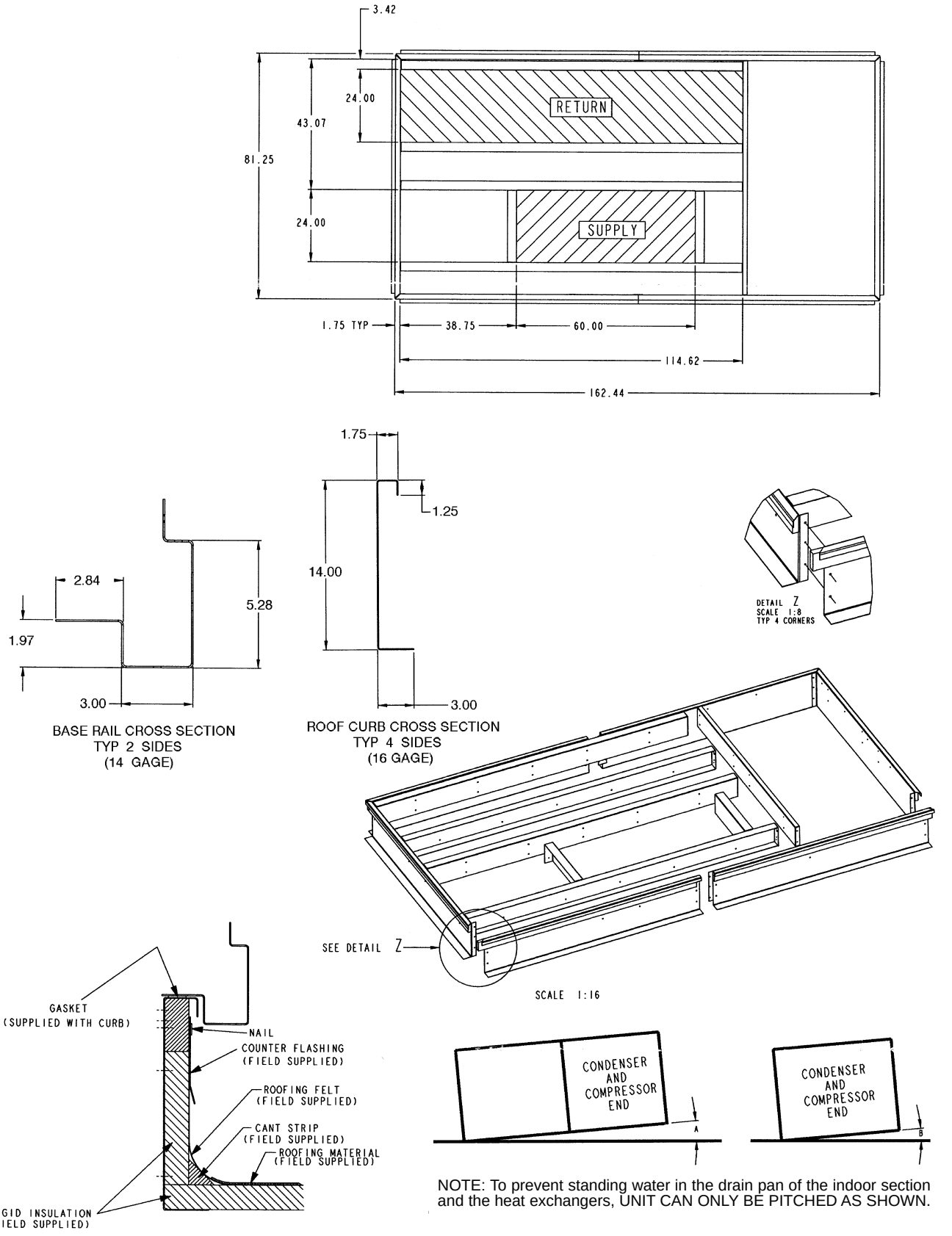

NOTE: To prevent standing water in the drain pan of the indoor section and the heat exchangers, UNIT CAN ONLY BE PITCHED AS SHOWN.

NOTES:
1. Unless otherwise specified, all dimensions are to outside of part.
2. Roof curb accessory is shipped disassembled.
3. All roof curb parts are to be 16 ga galvanized steel.
4. Dimensions are in inches.

UNIT LEVELING TOLERANCES DIMENSIONS*
(Degrees and Inches)

A		B	
Deg.	in.	Deg.	in.
1.0	2.9	.50	.75

*From edge of unit to horizontal.

Fig. 1 — Roof Curb (Sizes 024-034)

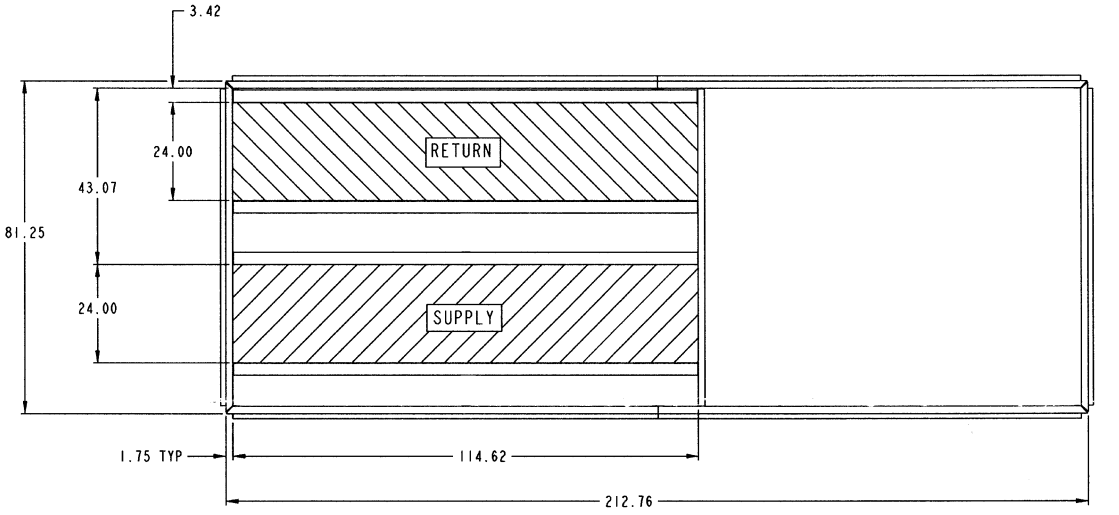

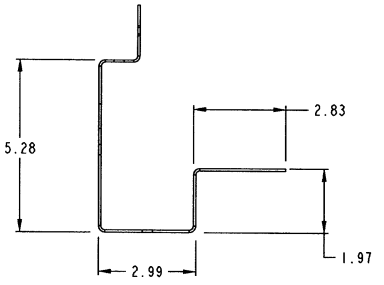

BASE RAIL CROSS SECTION
TYP (2) SIDES

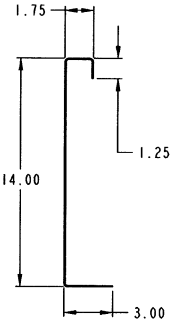

ROOF CURB CROSS SECTION
TYP 4 SIDES

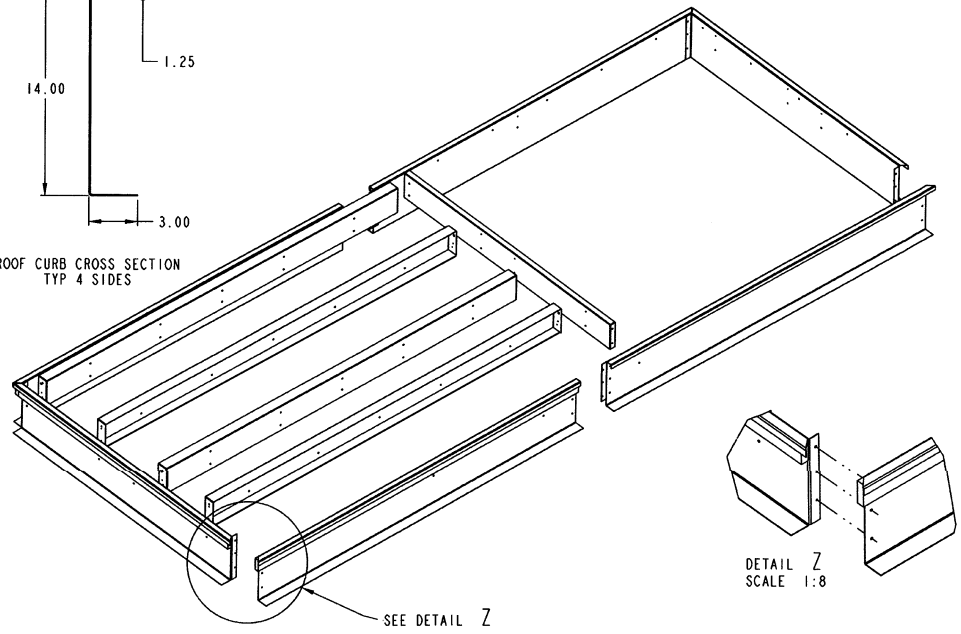

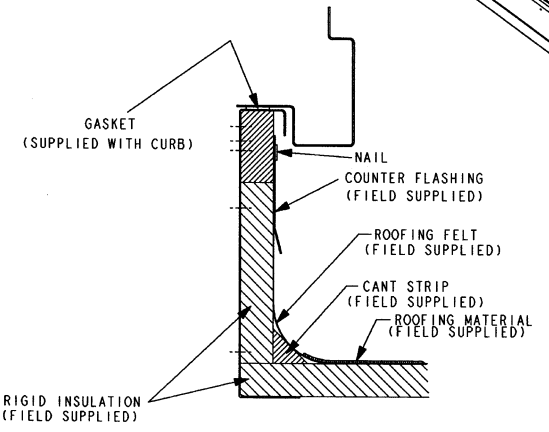

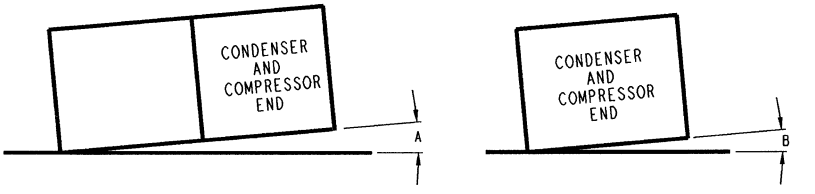

NOTE: To prevent standing water in the drain pan of the indoor section and the heat exchangers, UNIT CAN ONLY BE PITCHED AS SHOWN.

NOTES:
1. Unless otherwise specified, all dimensions are to outside of part.
2. Roof curb accessory is shipped disassembled.
3. All roof curb parts are to be 16 ga galvanized steel.
4. Dimensions are in inches.

UNIT LEVELING TOLERANCES DIMENSIONS*
(Degrees and Inches)

A		B	
Deg.	in.	Deg.	in.
1.0	2.9	.50	.75

*From edge of unit to horizontal.

Fig. 2 — Roof Curb (Sizes 038-048)

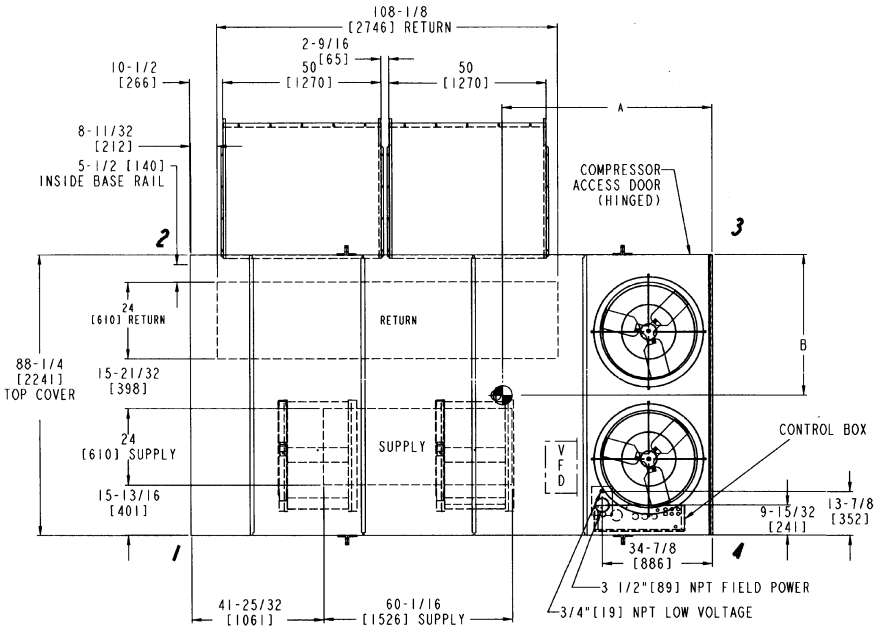

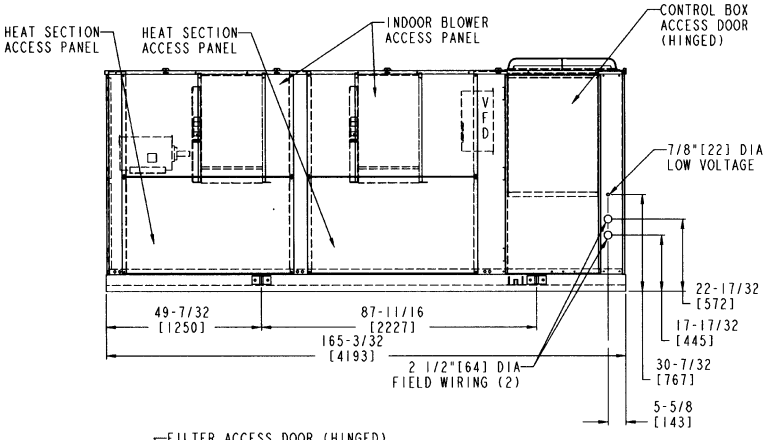

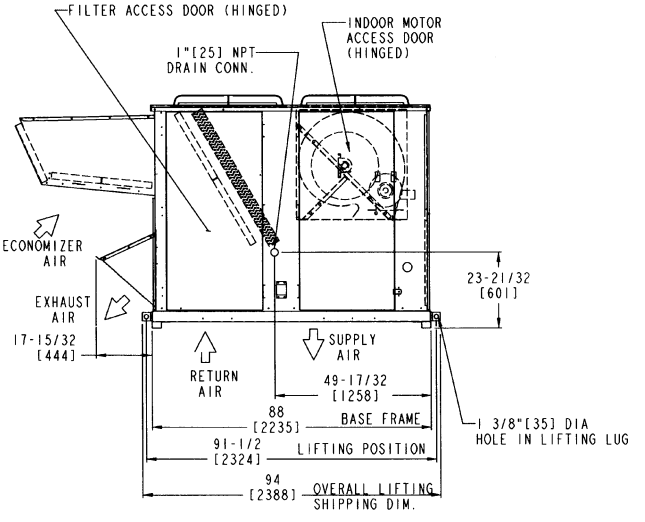

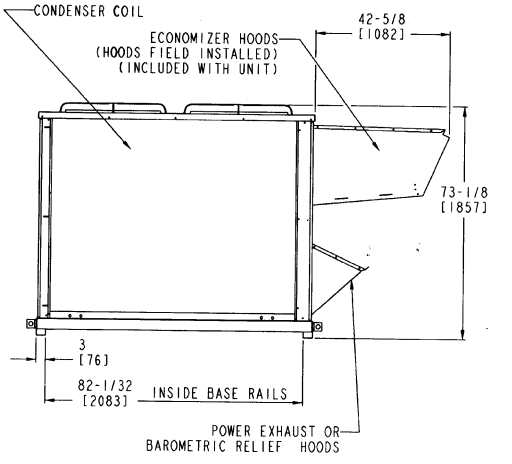

NOTES:
1. Weights include economizer (Std)
2. ◐ Center of gravity.
3. Do not locate adjacent units with discharge facing economizer inlet. Minimum clearances to be:
   Adjacent Units: 15′-0″
   Top of Units: No overhang
   Condenser Coil: 4′-0″
   Economizer Side: 6′-0″
   Filter Access Side: 10′-0″ (for removal of evaporator coil)
4. For smaller service and operational clearances, contact Carrier Application Engineering department.
5. Bottom ducts designed to be attached to accessory roof curb. If unit is mounted on dunnage, it is recommended the ducts be supported by cross braces as done on accessory roof curb.
6. Dimensions are in inches. Dimensions in [ ] are in millimeters.
7. For units with electric heat, a field-supplied 90° elbow must be installed in the supply ductwork below the unit discharge.

LEGEND

VFD — Variable Frequency Drive

UNIT SIZE 50EJ/EK	OPERATING WEIGHT (lb)	A	B	CORNER WEIGHT (lb)			
		ft-in.	ft-in.	1	2	3	4
024	4016	5-11⅜	3-5¹¹⁄₁₆	823	914	1199	1080
028	4102	5- 8½	3-7⅝	844	859	1210	1189
030	4102	5- 8½	3-7⅝	844	859	1210	1189
034	4102	5- 8½	3-7⅝	844	859	1210	1189

Fig. 3 — Base Unit Dimensions, 50EJ/EK024-034

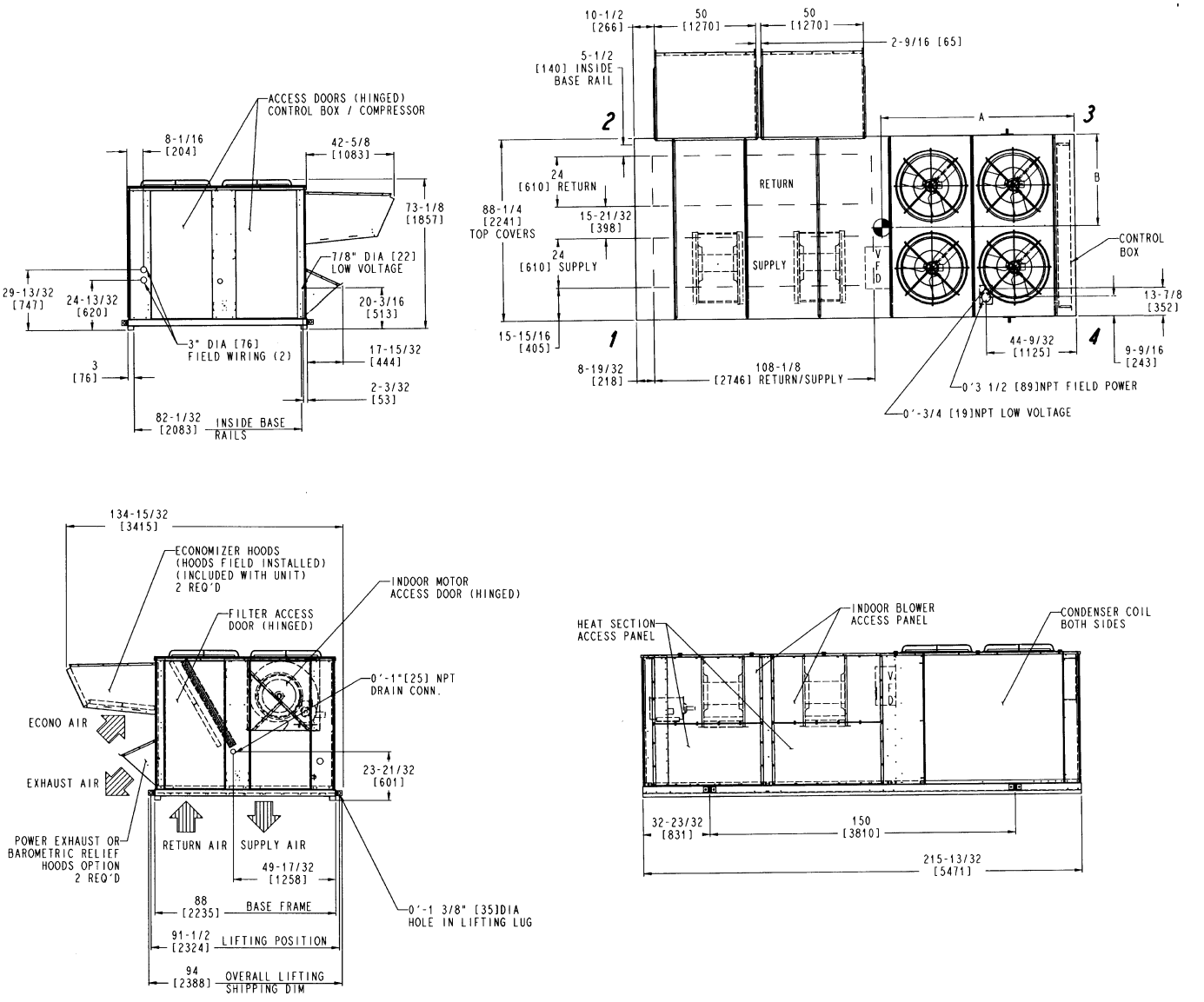

NOTES:
1. Weights include economizer (Std)
2. ⊕ Center of gravity.
3. Do not locate adjacent units with discharge facing economizer inlet. Minimum clearances to be:
   Adjacent Units: 15′-0″
   Top of Units: No overhang
   Condenser Coil: 4′-0″
   Economizer Side: 6′-0″
   Filter Access Side: 10′-0″ (for removal of evaporator coil)
4. For smaller service and operational clearances, contact Carrier Application Engineering department.
5. Bottom ducts designed to be attached to accessory roof curb. If unit is mounted on dunnage, it is recommended the ducts be supported by cross braces as done on accessory roof curb.
6. Dimensions are in inches. Dimensions in [ ] are in millimeters.
7. For units with electric heat, a field-supplied 90° elbow must be installed in the supply ductwork below the unit discharge.

LEGEND

VFD — Variable Frequency Drive

UNIT SIZE 50E	OPERATING WEIGHT (lb)	A	B	CORNER WEIGHT (lb)			
		ft-in.	ft-in.	1	2	3	4
J038	4282	7-7 5/16	3-10 1/2	961	858	1162	1302
J/K044	4508	7-3 13/16	3-11 1/2	973	868	1258	1409
J048	4795	7-2 3/16	3-10 3/32	1007	915	1368	1505

Fig. 4 — Base Unit Dimensions, 50EJ038-048 and 50EK044

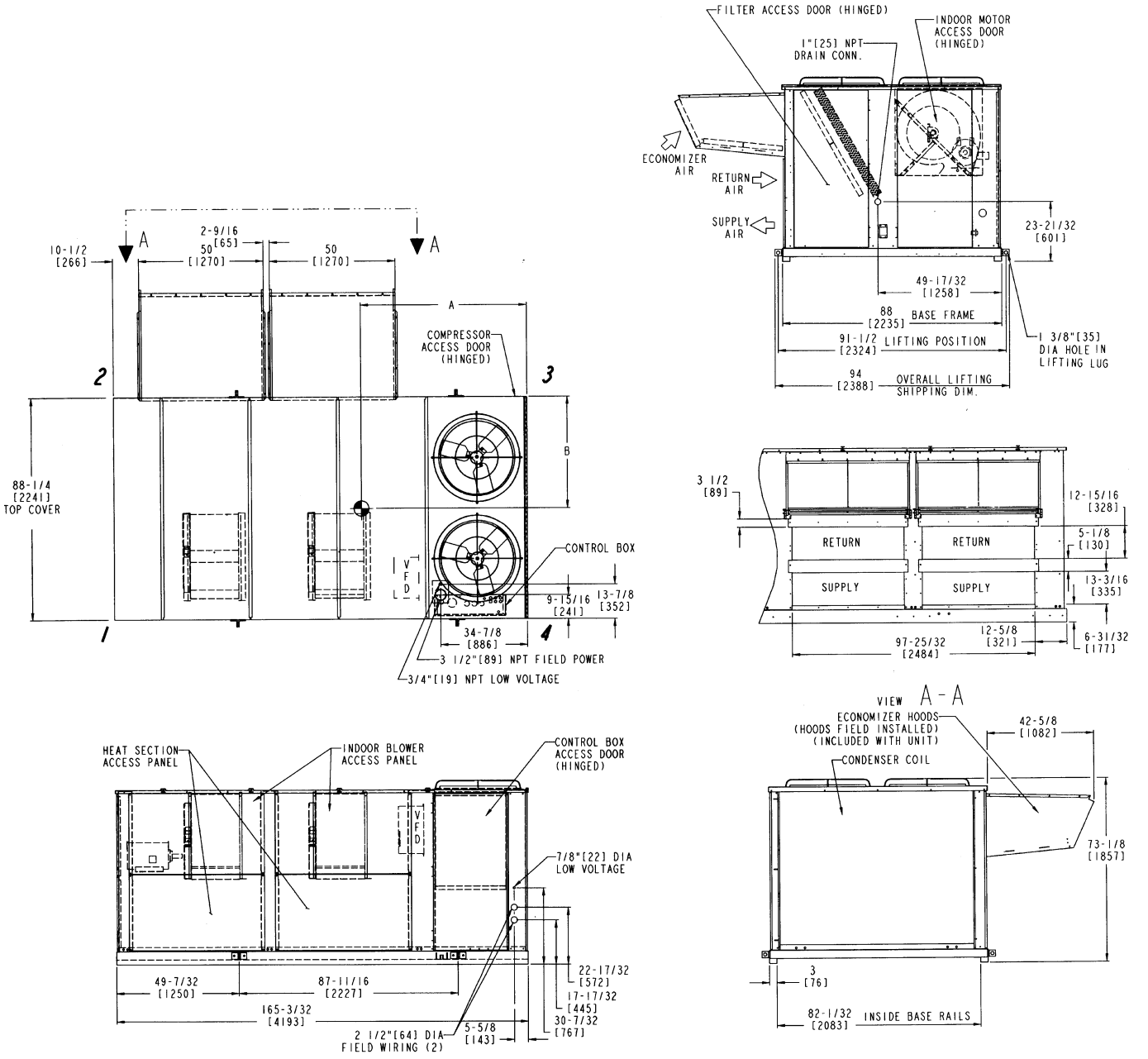

NOTES:
1. Weights include economizer (Std)
2. ◐ Center of gravity.
3. Do not locate adjacent units with discharge facing economizer inlet. Minimum clearances to be:
   Adjacent Units: 15′-0″
   Top of Units: No overhang
   Condenser Coil: 4′-0″
   Economizer Side: 6′-0″
   Filter Access Side: 10′-0″ (for removal of evaporator coil)
4. For smaller service and operational clearances, contact Carrier Application Engineering department.
5. Dimensions are in inches. Dimensions in [ ] are in millimeters.
6. For units equipped with electric heat, a field-supplied 90° elbow must be installed in the supply ductwork below the unit discharge.
7. For side-supply/return applications, a single return and supply ductwork connection is recommended for covering both return and both supply openings.

LEGEND

VFD — Variable Frequency Drive

UNIT SIZE 50EW/EY	OPERATING WEIGHT (lb)	A	B	CORNER WEIGHT (lb)			
		ft-in.	ft-in.	1	2	3	4
024	4016	5-11⅜	3-5 11/16	823	914	1199	1080
028	4102	5- 8½	3-7⅝	844	859	1210	1189
030	4102	5- 8½	3-7⅝	844	859	1210	1189
034	4102	5- 8½	3-7⅝	844	859	1210	1189

Fig. 5 — Base Unit Dimensions, 50EW/EY024-034

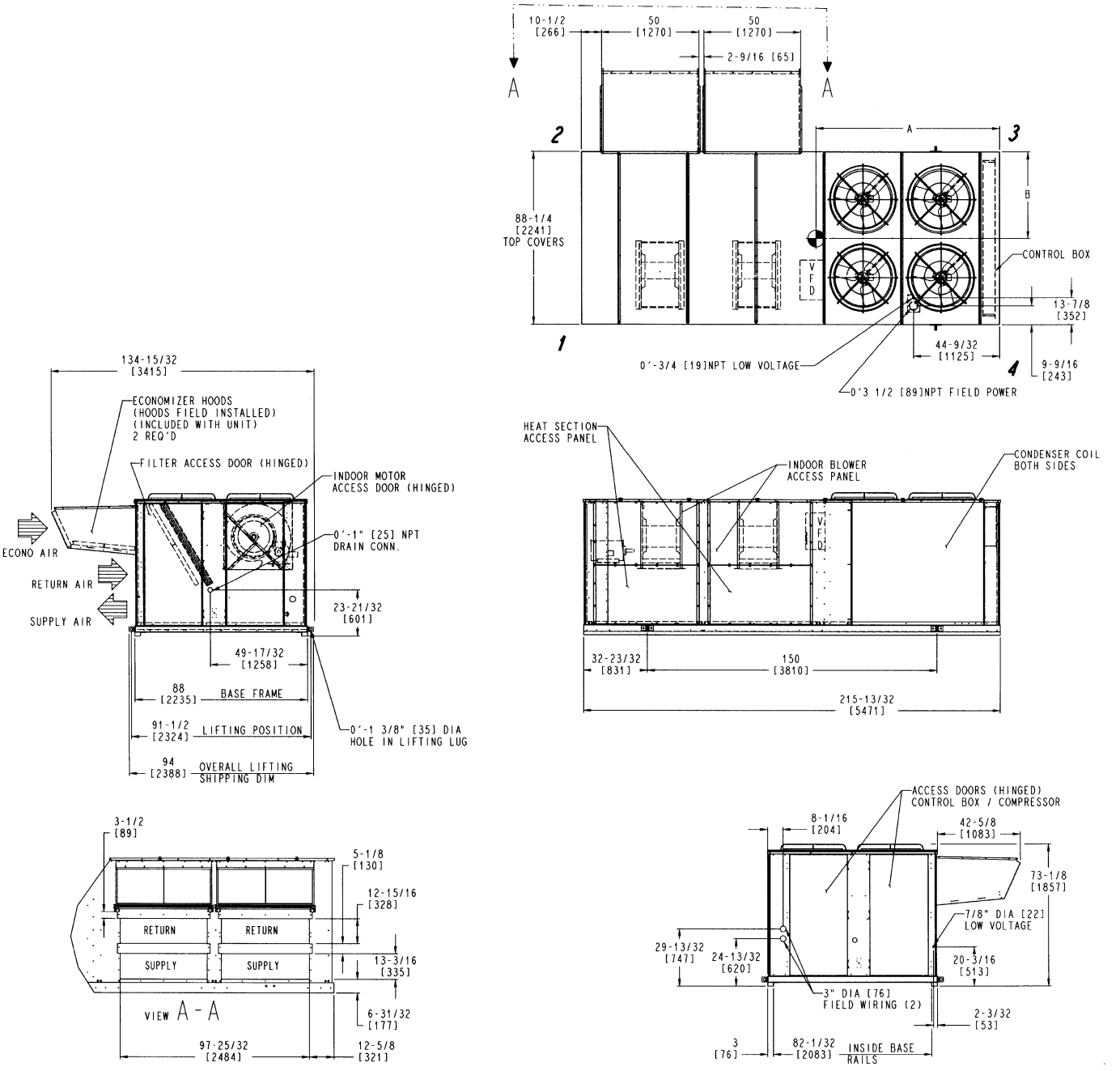

NOTES:
1. Weights include economizer (Std)
2. ⊕ Center of gravity.
3. Do not locate adjacent units with discharge facing economizer inlet. Minimum clearances to be:
   Adjacent Units: 15′-0″
   Top of Units: No overhang
   Condenser Coil: 4′-0″
   Economizer Side: 6′-0″
   Filter Access Side: 10′-0″ (for removal of evaporator coil)
4. For smaller service and operational clearances, contact Carrier Application Engineering department.
5. Dimensions are in inches. Dimensions in [ ] are in millimeters.
6. For units equipped with electric heat, a field-supplied 90° elbow must be installed in the supply ductwork below the unit discharge.
7. For side-supply/return applications, a single return and supply ductwork connection is recommended for covering both return and both supply air openings.

LEGEND

VFD — Variable Frequency Drive

UNIT SIZE 50E	OPERATING WEIGHT (lb)	A	B	CORNER WEIGHT (lb)			
		ft-in.	ft-in.	1	2	3	4
W038	4282	7-7 5/16	3-10 1/2	961	858	1162	1302
W/Y044	4508	7-3 13/16	3-11 1/2	973	868	1258	1409
W048	4795	7-2 3/16	3-10 3/32	1007	915	1368	1505

Fig. 6 — Base Unit Dimensions, 50EW038-048 and 50EY044

Step 2 — Rig and Place Unit — Inspect unit for transportation damage. File any claim with transportation agency. Keep unit upright, and do not drop. Use spreader bars over unit to prevent sling or cable damage. Rollers may be used to move unit across a roof. Level by using unit frame as a reference; leveling tolerance is shown in Fig. 1 and 2. See Fig. 7 for additional information. Unit weight is shown in Table 1.

NOTE: On retrofit jobs, ductwork may be attached to old unit instead of roof curb. Be careful not to damage ductwork when removing unit. Attach existing ductwork to roof curb instead of unit.

Four lifting lugs are provided on the unit base rails as shown in Fig. 7. Refer to rigging instructions on unit.

POSITIONING — Provide clearance around and above unit for airflow, safety, and service access (Fig. 3-6).

Do not install unit in an indoor location. Do not locate air inlets near exhaust vents or other sources of contaminated air.

Although unit is weatherproof, guard against water from higher level runoff and overhangs.

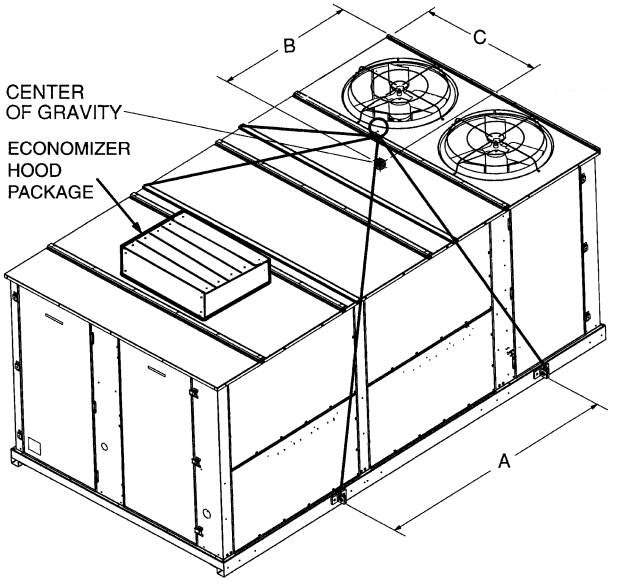

⚠ CAUTION

NOTICE TO RIGGERS:
ALL PANELS MUST BE IN PLACE WHEN RIGGING.

NOTE: Rig with four cables and spread with two 92 in. (2337 mm) spreader bars. Maintain a distance of 74 in. (1880 mm) from top of unit to eyehook.

NOTE:
Add 32 lb (14.5 kg) for domestic crating.
Add 312 lb (142 kg) for export crating (024-034 units).
Add 346 lb (157 kg) for export crating (038-048 units).
Add 250 lb (113 kg) for power exhaust.
Add 220 lb (100 kg) for copper condenser coil (024-034 units).
Add 285 lb (129 kg) for copper condenser coil (038-044 units).
Add 380 lb (172 kg) for copper condenser coil (048 unit).

MODEL 50EJ/EK/EW/EY	WEIGHT		A		B		C	
	lb	kg	in.	mm	in.	mm	in.	mm
024	4016	1822	87.68	2227	71.4	1814	41.7	1059
028	4102	1860	87.68	2227	68.5	1740	43.6	1107
030								
034								
038*	4282	1942	150	3810	91.3	2319	46.5	1181
044	4508	2045			87.8	2230	46.5	1181
048*	4795	2175			86.2	2189	46.1	1171

*Sizes 038 and 048 are 50EJ,EW units only.

Fig. 7 — Rigging Label

Table 1 — Physical Data

UNIT 50EJ,EK,EW,EY	024			028			030			034		
NOMINAL CAPACITY (tons)	20			25			27			30		
OPERATING WEIGHT (lb)*												
Unit												
Al/Al†	4016			4102			4102			4102		
Al/Cu†	4236			4322			4322			4322		
Roof Curb (14-in. curb)	365			365			365			365		
COMPRESSOR												
Type Ckt 1	06D328			06D328			06D537			06D537		
Ckt 2	06D818			06D328			06D328			06D537		
Number of Refrigerant Circuits	2			2			2			2		
Oil (oz) (Ckt1, Ckt 2)	115, 88			115 ea.			115 ea.			115 ea.		
REFRIGERANT TYPE	R-22											
Operating Charge (lb-oz)												
Circuit 1**	25-0			25-0			25-0			25-0		
Circuit 2	31-0			25-0			25-0			25-0		
CONDENSER COIL	Cross-Hatched ⅜″ Copper Tubes, Aluminum Lanced or Copper Fins											
Quantity	1			1			1			1		
Rows...Fins/in.	4...15			4...15			4...15			4...15		
Total Face Area (sq ft)	33.3			33.3			33.3			33.3		
CONDENSER FAN	Propeller Type											
Nominal Cfm	13,420			13,420			13,420			13,420		
Quantity...Diameter (in.)	2...30			2...30			2...30			2...30		
Motor Hp (1075 Rpm)	1			1			1			1		
EVAPORATOR COIL	Cross-Hatched ⅜″ Copper Tubes, Aluminum or Copper Plate Fins, Intertwined Circuits											
Rows...Fins/in.	4...15			4...15			4...15			4...15		
Total Face Area (sq ft)	31.7			31.7			31.7			31.7		
EVAPORATOR FAN	Centrifugal Type											
Quantity...Size (in.)	2...20x15			2...20x15			2...20x15			2..20x15		
Type Drive	Belt			Belt			Belt			Belt		
Nominal Cfm	8,000			10,000			11,000			12,000		
Motor Hp	5	10††	15	7.5	10††	15	10	15††	20	10	15††	20
Motor Frame Size	S184T	S215T	S254T	S213T	S215T	S254T	S215T	S254T	S256T	S215T	S254T	S256T
Motor Bearing Type	Ball			Ball			Ball			Ball		
Maximum Allowable Rpm	1200			1200			1200			1200		
Motor Pulley Pitch Diameter	4.6	6.6	6.9	4.9	6.1	7.1	6.6	6.7	7.5	6.4	6.9	7.5
Nominal Motor Shaft Diameter (in.)	1⅛	1⅜	1⅝	1⅜	1⅜	1⅝	1⅜	1⅝	1⅝	1⅜	1⅝	1⅝
Fan Pulley Pitch Diameter (in.)	11.1	12.5	11.1	11.1	11.1	11.1	13.7	11.1	11.1	12.5	11.1	11.1
Nominal Fan Shaft Diameter (in.)	1 11/16			1 11/16			1 11/16			1 11/16		
Belt, Quantity...Type	1...BX59	1...BX60	1...5VX590	1...BX56	1...BX56	1...5VX590	1...BX62	1...5VX590	1...5VX600	1...BX60	1...5VX590	1...5VX600
Belt, Length (in.)	62	63	59	59	59	59	65	59	60	63	59	60
Pulley Center Line Distance (in.)	16.0-18.7	15.6-18.4	15.0-17.9	15.6-18.4	15.6-18.4	15.0-17.9	15.6-18.4	15.0-17.9		15.6-18.4	15.0-17.9	
Factory Speed Setting (rpm)	725	924	1088	773	962	1119	843	1056	1182	896	1088	1182
HIGH-PRESSURE SWITCH (psig)												
Cutout	426			426			426			426		
Reset (Auto.)	320			320			320			320		
LOW-PRESSURE SWITCH (psig)												
Cutout	7			7			7			7		
Reset (Auto.)	22			22			22			22		
RETURN-AIR FILTERS												
Quantity...Size (in.)	10...20x24x2			10...20x24x2			10...20x24x2			10...20x24x2		
OUTDOOR-AIR FILTERS	8...16x25			8...16x25			8...16x25			8...16x25		
Quantity...Size (in.)	4...20x25			4...20x25			4...20x25			4...20x25		
POWER EXHAUST	Direct Drive, 3-Speed, Single-Phase Motor (Factory-Wired For High Speed) and Forward Curved Fan											
Motor, Quantity...Hp	4...1											
Fan, Diameter...Width (in.)	11...10											

LEGEND

Al — Aluminum
Cu — Copper

*Weight of unit does not include variable frequency drive (VFD), barometric relief, or power exhaust. If a VAV unit (a VFD is installed), add the VFD weight in the table at right.
†Evaporator coil fin material/condenser coil fin material.
**Sizes 024-034: Circuit 1 uses the lower portion of condenser coil, Circuit 2 uses the upper portion. Sizes 038-048: Circuit 1 uses the left condenser coil, Circuit 2 the right. All units have intertwined evaporator coils.
††Motor and drive shown will deliver approximately 2.5 in. wg net external static. For more drive information, see Table 2.

NOTES:
1. See Table 2 for evaporator fan motor data.
2. Sizes 038 and 048 are 50EJ,EW units only.

VFD (Hp)	VFD WEIGHTS (lb)		
	208/230 v	460 v	575 v
5	20	22	60
7.5	51	37	64
10	51	61	64
15	61	63	109
20	63	111	109
25	105	112	174
30	172	118	180

Table 1 — Physical Data (cont)

UNIT 50EJ,EK,EW,EY	038			044			048		
NOMINAL CAPACITY (tons)	35			40			45		
OPERATING WEIGHT (lb)*									
Unit									
Al/Al†	4282			4508			4795		
Al/Cu†	4567			4793			5175		
Roof Curb (14-in. curb)	410			410			410		
COMPRESSOR									
Type Ckt 1	06D537			06EA250			06EA265		
Ckt 2	06D537			06EA250			06EA250		
Number of Refrigerant Circuits	2			2			2		
Oil (oz) (Ckt1, Ckt 2)	115 ea.			224 ea.			304, 224		
REFRIGERANT TYPE	R-22								
Operating Charge (lb-oz)									
Circuit 1**	34-0			35-0			41-0		
Circuit 2	34-0			35-0			41-0		
CONDENSER COIL	Cross-Hatched ⅜″ Copper Tubes, Aluminum Lanced or Copper Fins								
Quantity	2			2			1		1
Rows...Fins/in.	3...15			3...15			4...15		3...15
Total Face Area (sq ft)	58.3			58.3			66.7		
CONDENSER FAN	Propeller Type								
Nominal Cfm	27,064			27,064			27,064		
Quantity...Diameter (in.)	4...30			4...30			4...30		
Motor Hp (1075 Rpm)	1			1			1		
EVAPORATOR COIL	Cross-Hatched ⅜″ Copper Tubes, Aluminum or Copper Plate Fins, Intertwined Circuits								
Rows...Fins/in.	3...15			3...15			4...15		
Total Face Area (sq ft)	34.7			34.7			34.7		
EVAPORATOR FAN	Centrifugal Type								
Quantity...Size (in.)	2..20x15			2...20x15			2...20x15		
Type Drive	Belt			Belt			Belt		
Nominal Cfm	14,000			16,000			18,000		
Motor Hp	10	15††	20	15	20††	25	20	25††	30
Motor Frame Size	S215T	S254T	S256T	S254T	S256T	S284T	S256T	S284T	S286T
Motor Bearing Type	Ball			Ball			Ball		
Maximum Allowable Rpm	1200			1200			1200		
Motor Pulley Pitch Diameter	4.1	6.9	7.5	6.9	8.1	9.1	5.3	5.9	7.5
Nominal Motor Shaft Diameter (in.)	1⅜	1⅝	1⅝	1⅝	1⅝	1⅛	1⅝	1⅞	1⅞
Fan Pulley Pitch Diameter (in.)	9.1	12.5	12.5	12.5	13.7	13.7	9.1	9.1	11.1
Nominal Fan Shaft Diameter (in.)		1 11/16			1 11/16			1 11/16	
Belt, Quantity...Type	1...BX51	1...5VX630	1...5VX650	1...5VX630	1...5VX670	2...5VX680	1...5VX550	2...5VX560	2...5VX610
Belt, Length (in.)	54	63	65	63	67	68	55	56	59
Pulley Center Line Distance (in.)	15.6-18.4	15.0-17.9		15.0-17.9		14.6-17.6	15.0-17.9	14.6-17.6	14.6-17.6
Factory Speed Setting (rpm)	788	966	1050	1066	1035	1162	1019	1135	1182
HIGH-PRESSURE SWITCH (psig)									
Cutout	426			426			426		
Reset (Auto.)	320			320			320		
LOW-PRESSURE SWITCH (psig)									
Cutout	7			7			7		
Reset (Auto.)	22			22			22		
RETURN-AIR FILTERS									
Quantity...Size (in.)	10...20x24x2			10...20x24x2			10..20x24x2		
OUTDOOR-AIR FILTERS	8...16x25			8...16x25			8...16x25		
Quantity...Size (in.)	4...20x25			4...20x25			4...20x25		
POWER EXHAUST	Direct Drive, 3-Speed, Single-Phase Motor (Factory-Wired For High Speed) and Forward Curved Fan								
Motor, Quantity...Hp	4...1								
Fan, Diameter...Width (in.)	11...10								

LEGEND

Al — Aluminum
Cu — Copper

*Weight of unit does not include variable frequency drive (VFD), barometric relief, or power exhaust. If a VAV unit (a VFD is installed), add the VFD weight in the table at right.
†Evaporator coil fin material/condenser coil fin material.
**Sizes 024-034: Circuit 1 uses the lower portion of condenser coil, Circuit 2 uses the upper portion. Sizes 038-048: Circuit 1 uses the left condenser coil, Circuit 2 the right. All units have intertwined evaporator coils.
††Motor and drive shown will deliver approximately 2.5 in. wg net external static. For more drive information, see Table 2.

NOTES:
1. See Table 2 for optional evaporator fan motor data.
2. Sizes 038 and 048 are 50EJ,EW units only.

VFD (Hp)	VFD WEIGHTS (lb)		
	208/230 v	460 v	575 v
5	20	22	60
7.5	51	37	64
10	51	61	64
15	61	63	109
20	63	111	109
25	105	112	174
30	172	118	180

Table 2 — Evaporator Fan Motor Data

UNIT SIZE	MOTOR HP	MOTOR SHAFT DIAMETER (in.)	FAN SHAFT SPEED (rpm)	MOTOR SHEAVE	MOTOR SHEAVE PITCH DIAMETER (in.)	BUSHING DIAMETER (in.)	FAN SHEAVE	FAN SHEAVE PITCH DIAMETER (in.)	BUSHING DIAMETER (in.)	BELT	OUTSIDE BELT LENGTH	BELT TENSION (Lb @ .24 in.)
024	5	1.12	725	BK52	4.6	None-1.125	1B5V110	11.1	B-1.6875	BX59	62	5.02
	10	1.38	924	BK72	6.6	None-1.375	1B5V124	12.5	B-1.6875	BX60	63	7.05
	15	1.62	1088	1B5V68	6.9	B-1.625	1B5V110	11.1	B-1.6875	5VX590	59	9.38
028	7.5	1.38	773	BK55H	4.9	H-1.375	1B5V110	11.1	B-1.6875	BX56	59	6.87
	10	1.38	962	BK67H	6.1	H-1.375	1B5V110	11.1	B-1.6875	BX56	59	7.26
	15	1.62	1119	1B5V70	7.1	B-1.625	1B5V110	11.1	B-1.6875	5VX590	59	9.17
030	10	1.38	843	BK72	6.6	None-1.375	1B5V136	13.7	B-1.6875	BX62	65	6.96
	15	1.62	1056	1B5V66	6.7	B-1.625	1B5V110	11.1	B-1.6875	5VX590	59	9.60
	20	1.62	1182	1B5V74	7.5	B-1.625	1B5V110	11.1	B-1.6875	5VX600	60	11.67
034	10	1.38	896	BK70H	6.4	H-1.375	1B5V124	12.5	B-1.6875	BX60	63	7.20
	15	1.62	1088	1B5V68	6.9	B-1.625	1B5V110	11.1	B-1.6875	5VX590	59	9.38
	20	1.62	1182	1B5V74	7.5	B-1.625	1B5V110	11.1	B-1.6875	5VX600	60	11.17
038	10	1.38	788	2BK47	4.1	None-1.375	2B5V90	9.1	B-1.6875	BX51	54	5.49
	15	1.62	966	1B5V68	6.9	B-1.625	1B5V124	12.5	B-1.6875	5VX630	63	9.22
	20	1.62	1050	1B5V74	7.5	B-1.625	1B5V124	12.5	B-1.6875	5VX650	65	10.02
044	15	1.62	966	1B5V68	6.9	B-1.625	1B5V124	12.5	B-1.6875	5VX630	63	9.54
	20	1.62	1035	1B5V80	8.1	B-1.625	1B5V136	13.7	B-1.6875	5VX670	67	10.37
	25	1.88	1162	1B5V90	9.1	B-1.875	1B5V136	13.7	B-1.6875	5VX680	68	10.88
048	20	1.62	1019	2B5V52	5.3	B-1.625	2B5V90	9.1	B-1.6875	5VX550	55	7.93
	25	1.88	1135	2B5V58	5.9	B-1.875	2B5V90	9.1	B-1.6875	5VX560	56	8.66
	30	1.88	1182	2B5V76	7.5	B-1.875	2B5V110	11.1	B-1.6875	5VX610	59	9.07

NOTE: Motor shaft speed is 1750 rpm. The fan shaft diameter is $1\frac{11}{16}$ inches.

ROOF MOUNT — Check building codes for weight distribution requirements.

Step 3 — Field Fabricate Ductwork — Secure all ducts to building structure. Use flexible duct connectors between unit and ducts as required. Insulate and weatherproof all external ductwork, joints, and roof openings with counter flashing and mastic in accordance with applicable codes.

Ducts passing through an unconditioned space must be insulated and covered with a vapor barrier.

To attach ductwork to roof curb, insert ductwork approximately 10 to 11 in. up into the curb. Connect ductwork to 14-gage roof curb material using sheet metal screw driven from inside the duct.

The units with electric heat require a 1-in. clearance for the first 24 in. of ductwork.

NOTE: A 90-degree elbow must be provided in the ductwork to comply with UL (Underwriters' Laboratories) codes for use with electric heat.

Outlet grilles must not lie directly below unit discharge.

Step 4 — Make Unit Duct Connections

50EJ,EK UNITS — Unit is shipped for through-the-bottom duct connections. Ductwork openings are shown in Fig. 3 and 4. **Attach all ductwork to roof curb.** Air distribution is shown in Fig. 8. Refer to installation instructions shipped with accessory roof curb for more information.

50EW,EY UNITS — Remove shipping covers from supply and return air openings. Attach field-supplied ductwork to unit. Use a single duct over **both** return openings and a single duct over both supply openings. See Fig. 5 and 6 for duct opening dimensions. Secure all ducts to the building structure. See Fig. 9. Use flexible duct connectors between unit and ducts as required.

Install accessory barometric relief or power exhaust in the field-fabricated return ductwork. Refer to Position Power Exhaust/Barometric Relief Damper Hood Section on page 29 for more information.

Step 5 — Trap Condensate Drain — See Fig. 3-6 and 10 for drain location. Condensate drain is open to the atmosphere and must be trapped. Install a trapped drain at the drain location. One 1-in. FPT coupling is provided inside unit evaporator section for condensate drain connection. A trap at least 4-in. deep must be used. Trap must be installed to prevent freeze-up.

Condensate pans are sloped so that water will completely drain from the condensate pan to comply with indoor air quality guidelines.

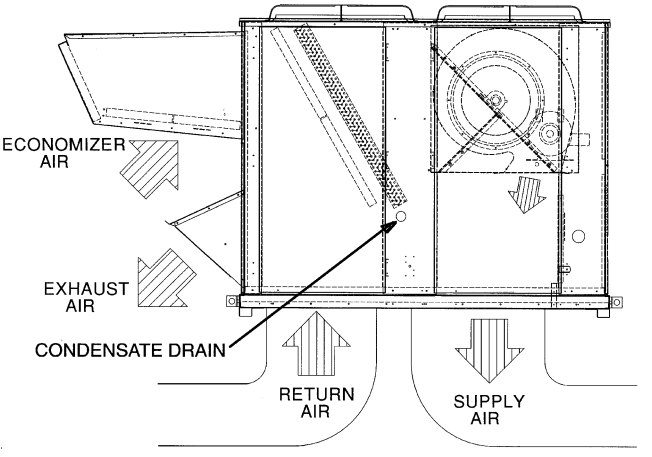

Fig. 8 — Air Distribution — Thru-the-Bottom

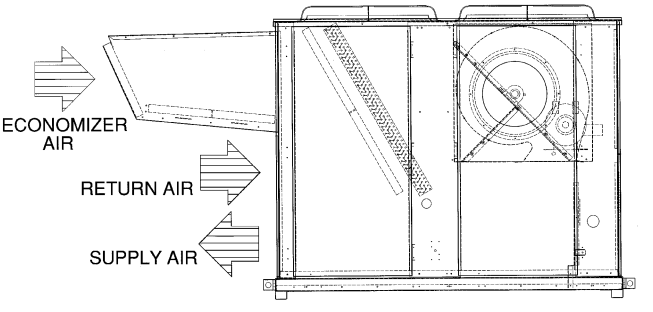

Fig. 9 — Air Distribution — Thru-the-Side

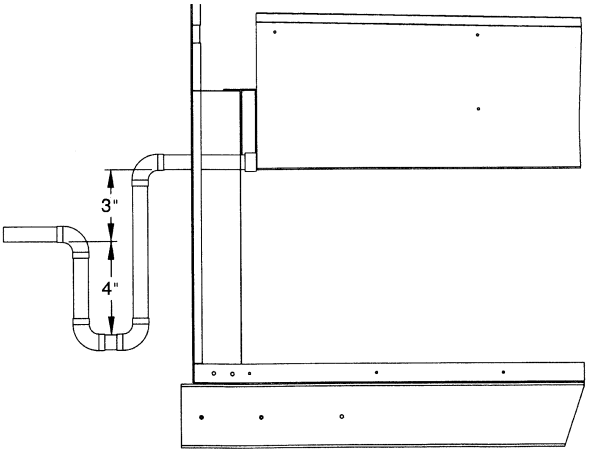

Fig. 10 — Condensate Drain Connections (Typical Roof Curb or Slab Mount Shown)

Step 6 — Controls Options — The control options that the units can provide are based on the following parameters: CV (constant volume) or VAV (variable air volume) operation; stand-alone unit with field-supplied sensors installed (CV or VAV); as a system via the Carrier Comfort System (TEMP or VVT); optional electronic expansion board installed (CV or VAV); linked to the Carrier Comfort Network; and availability of a computer and software (Comfort Works, Building Supervisor, and Service Tool) to access the base control board. See Table 3.

NOTE: Access to the base control board allows unit occupancy schedules, unit timeclock, and various set points to be changed from their factory-defined default settings.

CONSTANT VOLUME APPLICATIONS — The standard CV unit is capable of being operated with either a Carrier-approved thermostat or a field-supplied sensor. (See Price Pages for ordering information.)

Features with Thermostat Control of Unit

- two-stage heating (if installed)
- two-stage cooling
- control of unit using Y1, Y2, W1, W2, and G thermostat inputs
- control of the indoor fan
- outdoor air temperature/supply air temperature monitoring
- control of an outdoor air condenser fan based on outdoor air temperature
- control of modulating economizer damper to provide free cooling when outdoor conditions are suitable, using supply air temperature as a control point
- control of the economizer damper and indoor fan to obtain unoccupied free cooling
- provide power exhaust output to an external power exhaust controller
- support a field test for field checkout
- control of 2 stages of CV power exhaust
- compressor Time Guard® (power up and minimum off and on times)

Additional features are provided by accessing the standard unit control board via software with a computer. These features are:

- electronic expansion board features (if installed)
- compressor lockout during low supply air temperature
- control board diagnostics
- ability to change supply air set point (economizer control)
- ability to change high outdoor air temperature lockout set point (economizer control)
- ability to change power exhaust set points

NOTE: A CV unit without a thermostat requires a field-supplied sensor for operation.

Features with Sensor Control of Unit (Stand-Alone Applications — Unit control is limited to CV unoccupied default set points, 90 F for cooling, 55 F for heating. There are 3 sensor options available:

- T-57 sensor will monitor room temperature
- T-55 sensor will monitor room temperature and provide unoccupied override capability (1 hour)
- T-56 sensor will monitor room temperature, provide unoccupied override capability (1 hour), and provide a temperature offset of 5° F.

Standard features are:

- support of remote occupied/unoccupied input to start and stop the unit
- cooling capacity control of 3 stages using economizer and 2 compressors to maintain space temperature to an occupied or unoccupied set point
- enable heating (if installed) or cooling during unoccupied periods as required to maintain space temperature within the unoccupied set points
- adjustment of space temperature set points of ± 5° F when using a T-56 sensor

Table 3 — Controls Options and Configurations (Non-Thermostat Applications)

UNIT CONFIGURATION	DEFAULT COOLING	DEFAULT HEATING
UNITS RUNNING VERSION 1.0 UNIT CONTROL SOFTWARE		
CV or VAV Unit with SPT Sensor	Unoccupied Cooling — 90 F (SPT) Occupied Cooling — NA	Unoccupied Heating — 55 F (SPT) Occupied Heating — NA
CV Unit with SPT Sensor and Remote Start/Stop Switch	Unoccupied Cooling — 90 F (SPT) Occupied Cooling — 78 F (SPT)	Unoccupied Heating — 55 F (SPT) Occupied Heating — 68 F (SPT)
VAV Unit Remote Start/Switch Only	Unoccupied Cooling — NA Occupied Cooling — 55 F (SAT)	Unoccupied Heating — NA Occupied Heating — NA
VAV Unit with SPT Sensor and Remote Start/Stop Switch	Unoccupied Cooling — 90 F (SPT) Occupied Cooling — 55 F (SAT)	Unoccupied Heating — 55 F (SPT) Occupied Heating — NA
UNITS RUNNING VERSION 2.0 UNIT CONTROL SOFTWARE		
CV or VAV Unit with SPT Sensor	Unoccupied Cooling — 90 F (SPT) Occupied Cooling — NA	Unoccupied Heating — 55 F (SPT) Occupied Heating — NA
CV Unit with SPT Sensor and Remote Start/Stop Switch	Unoccupied Cooling — 90 F (SPT) Occupied Cooling — 78 F (SPT)	Unoccupied Heating — 55 F (SPT) Occupied Heating — 68 F (SPT)
VAV Unit Remote Start/Stop Switch Only	Unoccupied Cooling — 90 F (RAT) Occupied Cooling — 55 F (SAT)	Unoccupied Heating — 55 F (RAT) Occupied Heating — 68 F (RAT)*
VAV Unit with SPT Sensor and Remote Start/Stop Switch	Unoccupied Cooling — 90 F (SPT) Occupied Cooling — 55 F (SAT)	Unoccupied Heating — 55 F (SPT) Occupied Heating — 68 F (RAT)*

LEGEND

CV — Constant Volume
NA — Not Available
RAT — Return-Air Temperature
SAT — Supply-Air Temperature
SPT — Space Temperature
VAV — Variable Air Volume

*With DIP Switch No. 5 configured to OPEN (Occupied Heat Enabled).

NOTE: Space temperature sensor and remote stop/switch are field-supplied.

Features with sensor control of unit with computer access are:

- 365 day timeclock with backup (supports minute, hour, day of week, date, month, and year)
- daylight savings time function
- occupancy control with 8 periods for unit operation
- holiday table containing up to 18 holiday schedules
- ability to initiate timed override from T-55 or T-56 sensors
- ability to use multiple space temperature sensors to average the space temperature
- supply air temperature reset for the supply air temperature set point
- temperature compensated start to calculate early start times before occupancy
- access to the Display, Maintenance, Configuration, Service, and Set Point data table through network software

When the unit is equipped with a field-supplied space temperature sensor and a remote contact closure (remote start/stop) on the base control board, the occupied default set points will monitor unit operation. The occupied default set points are 78 F cooling and 68 F heating (if electric heat is installed). See Fig. 11 for remote start/stop wiring.

NOTE: For units which have not had the base unit control board accessed via software to set an occupancy schedule, the remote start/stop closure will allow the unit to operate in the pre-configured occupied default set points (based on return-air temperature) of 78 F cooling and 68 F heating. Without this feature, the unit will control to the unoccupied default set points of 90 F cooling and 55 F heating (if electric heat is installed).

An electronic expansion board may be field-installed to provide the following features:

- control of modulating economizer damper to maintain indoor air quality (IAQ) when outdoor conditions are suitable
- provide discrete inputs for fan status, filter status, field-applied status, and demand limit
- provide an output for the external alarm light indicator

When the unit is connected to the CCN (Carrier Comfort Network), the following expansion board features can be utilized.

- perform Demand Limit functions based on CCN loadshed commands or the state of the discrete input
- alarm monitoring of all key parameters
- CCN protocol
- provides power exhaust fire outputs for direct control of modulated power exhaust stages during fire or smoke modes
- smoke control modes including evacuation, smoke purge, pressurization, and fire shutdown (modulating power exhaust required)
- provides CCN IAQ participation

See Carrier TEMP or VVT® (Variable Volume and Temperature) literature for complete TEMP (single zone) or VVT (multi-zone) application information.

Features with Sensor Control of Unit (Network Applications) — The base control board provides, as standard, a connection for use with a Carrier VVT system and can also be integrated into a Carrier Comfort Network.

When the unit is accessed via a PC equipped with Comfort Works, Building Supervisor, or Service Tool, the following features can be accessed:

- on-board timeclock can be programmed
- occupancy schedules can be programmed
- unit set points can be changed
- alarms can be monitored

This access is available on the base control board via a RJ-11 phone jack or a 3-wire connection to the communication bus. See Fig. 12. The timeclock has a 10-hour minimum back-up time to provide for unit power off for servicing unit or during unexpected power outages. For complete Carrier Comfort System (CCS) or Carrier Comfort Network (CCN) features and benefits, refer to the product literature.

VARIABLE AIR VOLUME (VAV) APPLICATIONS

Features with Stand-Alone Applications — A VAV unit is capable of providing unoccupied cooling controlling to a 90 F return-air temperature utilizing the factory-supplied return-air thermistor located below the return-air damper in the return-air section for unit control. The unit will provide unoccupied heating (if electric heat is installed) controlling to a 55 F return-air temperature. Also provided is a morning warm-up which is initiated by the Occupied mode (if electric heat is installed) and continues until the return-air temperature rises to 68 F. The unit will provide occupied cooling with a default temperature of 55 F for the supply air. The supply-air temperature is measured by the supply-air thermistor, located in the indoor fan compartment.

Standard features of a VAV unit with a remote start/stop switch are:

- control of an outdoor condenser fan based upon outdoor air temperature
- control of modulating economizer to provide free cooling when outdoor conditions are suitable, using supply air temperature as a set point
- support of remote occupied/unoccupied input to start or stop the unit
- provide power exhaust output to an external power exhaust controller
- support supply air temperature reset to offset supply air set point
- support a field test for field check out
- support linkage to DAV systems
- cooling capacity control of 6 stages plus economizer with compressors and unloaders to maintain supply air temperature set point during occupied periods
- control of one stage of heat to maintain supply air temperature at supply air set point during occupied periods
- provide a variable frequency drive high voltage relay output to enable VFD
- control of heat interlock relay

With the addition of a remote start/stop switch heating or cooling is enabled during unoccupied periods as required to maintain space temperature to within unoccupied set points.

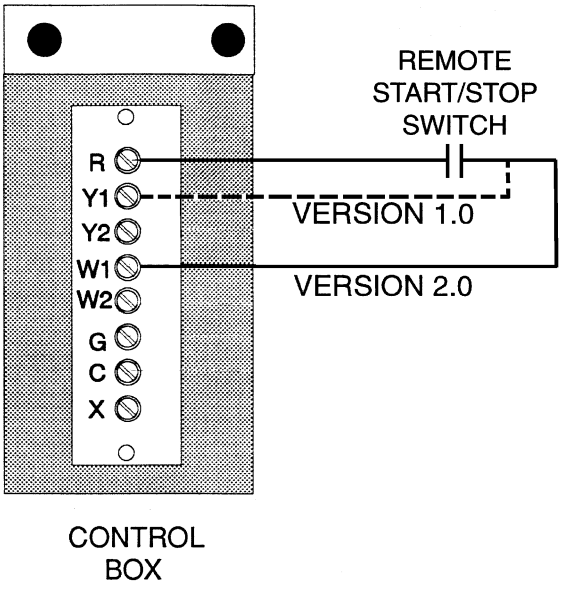

NOTE: On units running Version 1.0 of the Unit Control Software, the remote start/stop switch is connected to R and Y1. On units running Version 2.0 of the Unit Control Software, the remote start/stop switch is connected to R and W1.

Fig. 11 — Field Control Remote Start/Stop

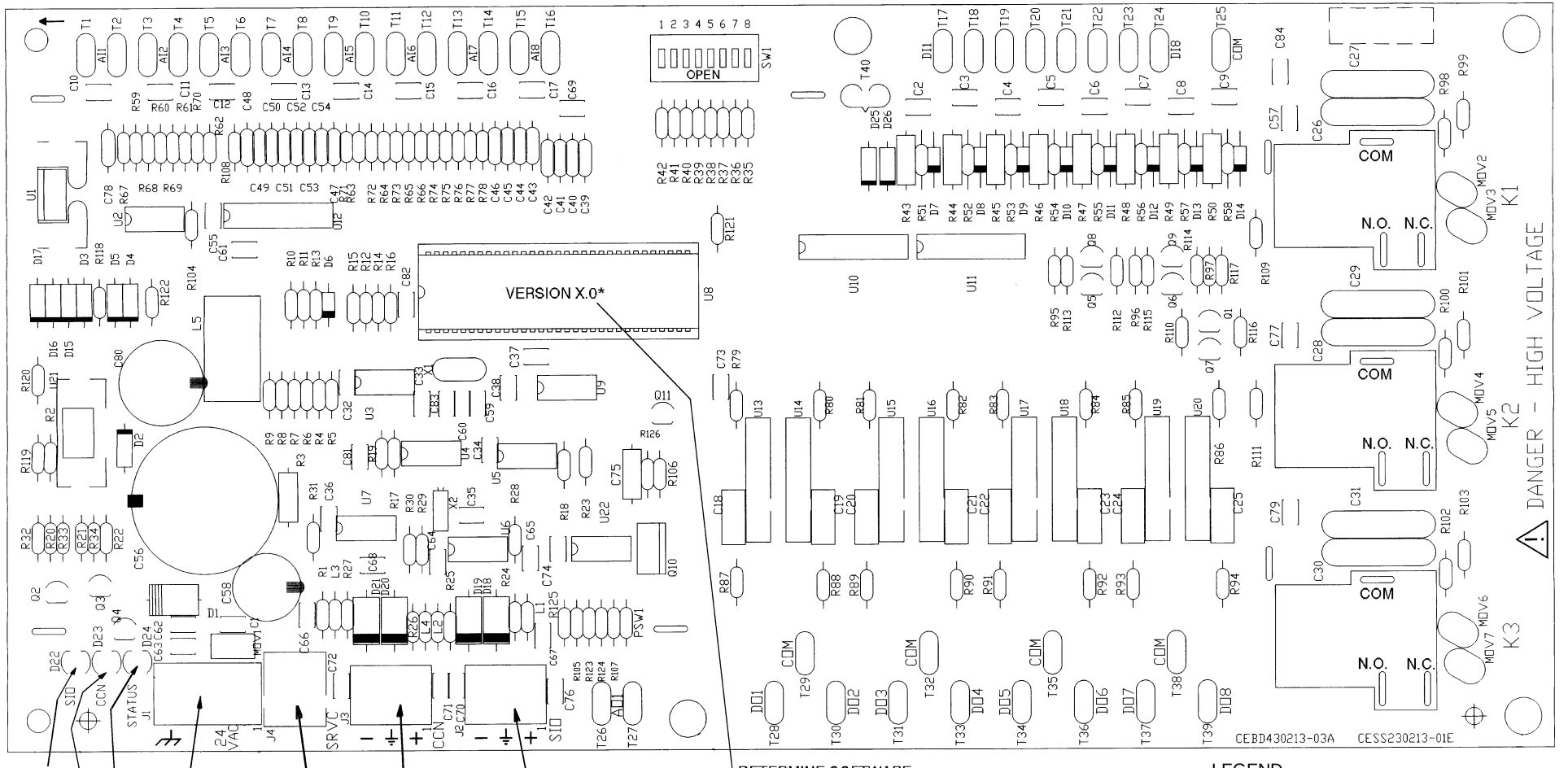

LEGEND

CCN	— Carrier Comfort Network	**R**	— Relay
COM	— Common	**SIO**	— Serial Input/Output
D	— Diode	**SW**	— Switch
N.C.	— Normally Closed	**T**	— Terminal
N.O.	— Normally Open		

*Where X is the unit control software version (1 or 2).

Fig. 12 — Control Board Diagram

For units running Version 1.0 of the unit control software, network access software is required to enable occupied heating. For units running Version 2.0 of the unit control software, occupied heating is enabled or disabled by the position of DIP switch no. 5.

Additional features may be provided with electronic access to Unit Control Board. These features are:
- control board diagnostics
- compressor time guard override (power up, minimum off and on times)
- compressor lockout during low supply-air temperature
- electronic expansion board features (if installed)
- field test capability
- control of the economizer damper and indoor fan to option unoccupied free cooling
- 365 day timeclock with backup (supports minute, hour, day, month, and year)
- holiday table containing up to 18 holiday schedules
- occupancy control with 8 periods for unit operation
- support a set of display, maintenance, configuration, service, and set point data tables for interface with Building Supervisor, Comfort Works, or Service Tool

When a VAV unit with a space temperature sensor is accessed via a computer, the following additional features are available:
- ability to initiate timed override from T-55 sensors
- ability to use multiple space temperature sensors to average space temperature
- temperature compensated start to calculate early start time before occupancy
- provide space temperature reset to reset the supply air set point upward when the temperature falls below the occupied cooling set point

An electronic expansion board may be field-installed to provide the following features:
- fan status
- filter status
- field-applied status
- demand limiting
- IAQ sensor
- OAQ sensor
- alarm light

When the unit is connected to the CCN (Carrier Comfort Network), the following expansion board features can be utilized:
- CCN IAQ (indoor air quality) participation
- CCN OAQ (outdoor air quality) participation
- CCN demand limit participation
- fire unit shutdown
- fire pressurization
- fire evacuation
- fire smoke purge
- modulated power exhaust override

A field-supplied space temperature sensor can be added to provide the following:
- T-57 sensor will monitor room temperature
- T-55 sensor will monitor room temperature and provide unoccupied override capability (1 hour)

When the unit is equipped with a field-supplied space temperature sensor and a remote contact closure (remote start/stop), the occupied default set points will monitor unit operation. The occupied default set points are 55 F (supply air) cooling and 68 F (space temperature) heating (if electric heat is installed). See Fig. 11 for remote start/stop wiring.

NOTE: For units without a space temperature sensor and which have not had the base unit control board accessed via software to set an occupancy schedule, the remote start/stop closure will allow the unit to operate in the pre-configured occupied default set points of 55 F (supply-air temperature) cooling and 68 F (return-air temperature) heating. Without an occupancy schedule, the unit will control to the unoccupied default set points of 90 F (return air) cooling and 55 F (return air) heating (if electric heat is installed).

Features with Network Applications — The base control board provides, as standard, a connection for use with a Carrier Comfort System and can also be integrated into a Carrier Comfort Network. When the unit is accessed via a PC equipped with Comfort Works, Building Supervisor, or Service Tool software, the following features can be accessed:
- on-board timeclock can be programmed
- occupancy schedules can be programmed
- unit set points can be changed
- alarms can be monitored

This access is available on the base control board via a RJ-11 phone jack or a 3-wire connection to the communication bus. See Fig. 12. The timeclock has a 10-hour minimum back-up time to provide for unit power off for servicing unit or during unexpected power outages. For complete Carrier Comfort System (CCS) or Carrier Comfort Network (CCN) features and benefits, refer to the product literature.

Step 7 — Make Electrical Connections

POWER WIRING — Units are factory wired for the voltage shown on the unit nameplate. The main terminal block is suitable for use with aluminum or copper wires and is sized for single-point electric heat.

When installing units, provide a disconnect per NEC (National Electrical Code) of adequate size (MOCP [maximum overcurrent protection] of unit is on the informative plate). All field wiring must comply with NEC and all local codes. Size wire based on MCA (minimum circuit amps) on the unit informative plate. See Fig. 13 for power wiring connections to the unit power terminal block and equipment ground.

The main power terminal block is suitable for use with aluminum or copper wire. See Fig. 13. Units have circuit breakers for compressors, fan motors, and control circuit. If required by local codes, provide an additional disconnect, per NEC and local codes requirements, of adequate size (Table 4). Whenever external electrical sources are used, unit must be electrically grounded in accordance with local codes, or in absence of local codes, with NEC, ANSI (American National Standards Institute) C1-latest year.

All field wiring must comply with NEC and local code requirements.

FIELD POWER SUPPLY — Unit is factory wired for voltage shown on nameplate. See Table 4 for electrical data.

Field wiring can be brought into the unit from bottom (through basepan and roof curb) or through side of unit (corner post next to control box).

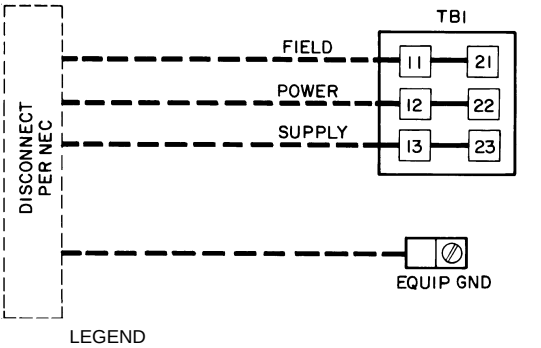

LEGEND

EQUIP — Equipment
GND — Ground
NEC — National Electrical Code
TB — Terminal Block

NOTE: Maximum wire size for TB1 is 500 MCM.

Fig. 13 — Field Power Wiring Connections

A 3½-in. NPT coupling for field power wiring and a ¾-in. NPT coupling for 24-v control wiring are provided in basepan. In the side post, there are two 2½-in. (024-034) or 3-in. (038-048) knockouts for the field power wiring. See Fig. 3-6. If control wiring is to be brought in through the side of unit, a ⅞-in. diameter hole is provided in the condenser side post next to the control box.

If disconnect box is mounted to corner post, be careful not to drill any screws into the condenser coil.

Routing Through Bottom of Unit — If wiring is brought in through bottom of unit, use field-supplied watertight conduit to run power wiring from basepan out through bottom 3½-in. hole to the disconnect box and back into unit to the main control box.

Use strain relief going into control box through 2½-in. diameter hole provided. After wires are in unit control box, connect to power terminal block (see Power Wiring section on this page 15).

Low-voltage wiring must be run in watertight conduit from the basepan to control box and through ⅞-in. diameter hole provided in bottom of unit control box. Field-supplied strain relief must be used going into the box. After wiring is in control box, make connections to proper terminals on terminal blocks (see Field Control Wiring section on this page).

Install conduit connector in unit basepan or side panel openings provided. Route power and ground lines through connector to connections in unit control box as shown on unit wiring diagram and Fig. 13.

Routing Through Side of Unit — Route power wiring in field-supplied watertight conduit into unit through 2½- or 3-in. hole. Strain relief (field supplied) must be used in hole. See Fig. 13.

Use field-supplied strain relief going into control box through 2½- or 3-in. diameter hole provided. After wires are in unit control box, connect to power terminal block (see Power Wiring section on page 15).

Bring low-voltage control wiring through factory-drilled ⅞-in. diameter hole in condenser side post. Use strain relief going into ⅞-in. diameter hole in bottom of unit control box.

After wiring is in control box, make connection to proper terminals on terminal blocks (see Field Control Wiring section on this page).

IMPORTANT: THE VAV (variable air volume) units incorporate VFD (variable frequency drives) which generate, use, and can radiate radio frequency energy. If units are not installed and used in accordance with these instructions, they may cause radio interference. They have been tested and found to comply with limits of a Class A computing device as defined by FCC (Federal Communications Commission) regulations, Subpart J of Part 15, which are designed to provide reasonable protection against such interference when operated in a commercial environment.

⚠ WARNING

The unit must be electrically grounded in accordance with local codes and NEC ANSI/NFPA 70 (National Fire Protection Association).

Operating voltage to compressor must be within voltage range indicated on unit nameplate. On 3-phase units, voltages between phases must be balanced within 2% and the current must be balanced within 10%.

Use the formula in Table 4 to determine the percentage of voltage imbalance.

IMPORTANT: If the supply voltage phase imbalance is more than 2%, contact your local electric utility company immediately.

Unit failure as a result of operation on improper line voltage or excessive phase imbalance constitutes abuse and may cause damage to electrical components.

On 208/230-v units, transformer no. 1 is wired for 230-v. If 208/230-v unit is to be run with 208-v power supply, the transformer must be rewired as follows:

1. Remove cap from red (208-v) wire.
2. Remove cap from spliced orange (230-v) wire. Disconnect orange wire from black unit power wire.
3. Cap orange wire.
4. Splice red wire and black unit power wire. Cap wires.

IMPORTANT: Be certain unused wires are capped. Failure to do so may damage the transformers.

FIELD CONTROL WIRING — Install either a Carrier-approved accessory thermostat or a CCN (Carrier Comfort Network) compatible temperature sensor. Thermostats are used on CV (constant volume) units only. Control box diagrams are shown in Fig. 14 and 15.

Thermostat Wiring (CV Only) — Install a Carrier-approved accessory thermostat assembly (per current price pages) according to the installation instructions included with the accessory or these instructions. Locate thermostat assembly on a solid wall in the conditioned space to sense average temperature.

Route thermostat cable or equivalent single leads of colored wire from subbase terminals to low-voltage connections as shown on unit label wiring diagram and in Fig. 16.

NOTE: For wire runs up to 50 ft, use no. 18 AWG (American Wire Gage) insulated wire (35 C minimum). For 50 to 75 ft, use no. 16 AWG insulated wire (35 C minimum). For over 75 ft, use no. 14 AWG insulated wire (35 C minimum). All wire larger than no. 18 AWG cannot be directly connected to the thermostat and will require a junction box and splice at the thermostat.

Set heat anticipators settings to 0.1 for all voltages. Settings may be changed slightly to provide a greater degree of comfort for a particular installation.

Sensor Wiring (CV or VAV) — The temperature sensor is wired into the unit control board. See Fig. 17.

The unit is controlled with a T55, T56 (CV only), or T57 zone sensor. Terminal TH on the sensor is connected to T1 of the base module board. Terminal COM on the sensor is connected to T2 on the base module board. If a T56 set point override sensor is used, the override connection SW on the sensor is connected to T3 on the base module board.

VAV units using Version 1.0 of the unit control software may operate without a space temperature sensor during occupied schedules, but unit will not provide unoccupied heating or cooling.

VAV Units — VAV units require a field-supplied heat interlock relay (HIR) to drive the air terminal wide open when in heat mode. The HIR part number is HN61KK041.

Remote Field Control (Units Running Version 1.0 of Unit Control Software) — A switch closure across terminals R and Y1 on TB-3 will initiate the Occupied mode. This can be done manually as well as through a field-supplied timeclock.

Table 4 — Electrical Data — 50EJ,EK,EW,EY024-048

UNIT SIZE	NOMINAL VOLTAGE (3 Ph 60 Hz)	VOLTAGE RANGE		COMPRESSOR				OFM			IFM		POWER EXHAUST		ELECTRIC HEAT*		POWER SUPPLY	
				No. 1		No. 2												
		Min	Max	RLA	LRA	RLA	LRA	Qty	Hp	FLA (ea)	Hp	FLA	FLA	LRA	kW	FLA	MCA	MOCP†
024	208/230	187	254	39.1	228	25.6	160	2	1	5.3	5	16.7/15.2	— 23.6	— 41.6	— —	— —	101.8/100.3 125.4/123.9	125/125 150/150
													— 23.6	— 41.6	29/36 29/36	75.1/ 86.6 75.1/ 86.6	114.7/127.3 144.2/156.8	125/150 150/175
													— 23.6	— 41.6	59/72 59/72	150.1/173.2 150.1/173.2	171.0/192.2 200.5/221.7	200/225 225/225
											10	30.8/28.0	— 23.6	— 41.6	— —	— —	115.9/113.1 139.5/136.7	150/150 175/175
													— 23.6	— 41.6	29/36 29/36	75.1/ 86.6 75.1/ 86.6	132.3/143.3 161.8/172.8	150/150 175/175
													— 23.6	— 41.6	59/72 59/72	150.1/173.2 150.1/173.2	188.6/208.2 218.1/237.7	220/225 250/250
											15	46.2/42.0	— 23.6	— 41.6	— —	— —	131.3/127.1 154.9/150.7	150/150 175/175
													— 23.6	— 41.6	29/36 29/36	75.1/ 86.6 75.1/ 86.6	151.6/160.8 181.1/190.3	175/175 200/200
													— 23.6	— 41.6	59/72 59/72	150.1/173.2 150.1/173.2	207.9/225.7 237.4/255.2	250/250 275/275
	460	414	508	19.9	114	11.5	80	2	1	2.7	5	7.6	— 12.6	— 23.6	— —	— —	49.4 62.0	60 80
													— 12.6	— 23.6	36 36	43.3 43.3	63.6 79.4	70 80
													— 12.6	— 23.6	72 72	86.6 86.6	96.1 111.9	110 125
											10	14	— 12.6	— 23.6	— —	— —	55.8 68.4	70 80
													— 12.6	— 23.6	36 36	43.3 43.3	71.6 87.4	80 90
													— 12.6	— 23.6	72 72	86.6 86.6	104.1 119.9	110 125
											15	21	— 12.6	— 23.6	— —	— —	62.8 75.4	80 90
													— 12.6	— 23.6	36 36	43.3 43.3	80.4 96.1	90 100
													— 12.6	— 23.6	72 72	86.6 86.6	112.9 128.6	125 150
	575	518	632	16.0	91	9.6	64	2	1	2.4	5	6.1	— 12.6	— 23.6	— —	— —	40.5 53.1	50 60
													— 12.6	— 23.6	36 36	34.6 34.6	50.9 66.7	60 70
													— 12.6	— 23.6	72 72	69.3 69.3	76.9 92.7	80 100
											10	11	— 12.6	— 23.6	— —	— —	45.4 58.0	60 70
													— 12.6	— 23.6	36 36	34.6 34.6	57.1 72.8	60 80
													— 12.6	— 23.6	72 72	69.3 69.3	83.0 98.8	90 100
											15	17	— 12.6	— 23.6	— —	— —	51.4 64.0	60 80
													— 12.6	— 23.6	36 36	34.6 34.6	64.6 80.3	70 90
													— 12.6	— 23.6	72 72	69.3 69.3	90.5 106.3	100 110

LEGEND

FLA — Full Load Amps
HACR — Heating, Air Conditioning and Refrigeration
IFM — Indoor (Evaporator) Fan Motor
LRA — Locked Rotor Amps
MCA — Minimum Circuit Amps
MOCP — Maximum Overcurrent Protection
NEC — National Electrical Code
OFM — Outdoor (Condenser) Fan Motor
RLA — Rated Load Amps

*Heater capacity (kW) is based on heater voltage of 208 v, 240 v, 480 v, and 575 v. If power distribution voltage to unit varies from rated heater voltage, heater kW will vary accordingly.
†Fuse or HACR circuit breaker.

NOTES:
1. In compliance with NEC requirements for multimotor and combination load equipment (refer to NEC Articles 430 and 440), the overcurrent protective device for the unit shall be fuse or HACR breaker. The Canadian units may be fuse or circuit breaker.
2. **Unbalanced 3-Phase Supply Voltage**
Never operate a motor where a phase imbalance in supply voltage is greater than 2%. Use the following formula to determine the percent of voltage imbalance.

$$\% \text{ Voltage Imbalance} = 100 \times \frac{\text{max voltage deviation from average voltage}}{\text{average voltage}}$$

EXAMPLE: Supply voltage is 460-3-60.

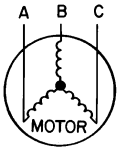

AB = 452 v
BC = 464 v
AC = 455 v

$$\text{Average Voltage} = \frac{452 + 464 + 455}{3} = \frac{1371}{3} = 457$$

Determine maximum deviation from average voltage.
(AB) 457 − 452 = 5 v
(BC) 464 − 457 = 7 v
(AC) 457 − 455 = 2 v

Maximum deviation is 7 v.

Determine percent of voltage imbalance.

$$\% \text{ Voltage Imbalance} = 100 \times \frac{7}{457} = 1.53\%$$

This amount of phase imbalance is satisfactory as it is below the maximum allowable 2%.

IMPORTANT: If the supply voltage phase imbalance is more than 2%, contact your local electric utility company immediately.

3. MCA calculation for units with electric heaters over 50 kW = (1.25 x IFM amps) + (1.00 x heater FLA).

Table 4 — Electrical Data — 50EJ,EK,EW,EY024-048 (cont)

UNIT SIZE	NOMINAL VOLTAGE (3 Ph 60 Hz)	VOLTAGE RANGE		COMPRESSOR				OFM			IFM		POWER EXHAUST		ELECTRIC HEAT*		POWER SUPPLY	
				No. 1		No. 2												
		Min	Max	RLA	LRA	RLA	LRA	Qty	Hp	FLA (ea)	Hp	FLA	FLA	LRA	kW	FLA	MCA	MOCP†
028	208/230	187	254	39.1	228	39.1	228	2	1	5.3	7.5	24.2/ 22.0	— 23.6	— 41.6	— —	— —	122.8/120.6 146.4/144.2	150/150 175/175
													— 23.6	— 41.6	29/36 29/36	75.1/ 86.6 75.1/ 86.6	124.1/135.8 153.6/165.3	150/150 175/175
													— 23.6	— 41.6	59/72 59/72	150.1/173.2 150.1/173.2	180.4/200.7 209.9/230.2	200/225 225/250
											10	30.8/ 28.0	— 23.6	— 41.6	— —	— —	129.4/126.6 153.0/150.2	150/150 175/175
													— 23.6	— 41.6	29/36 29/36	75.1/ 86.6 75.1/ 86.6	132.3/143.3 161.8/172.8	150/150 175/175
													— 23.6	— 41.6	59/72 59/72	150.1/173.2 150.1/173.2	188.6/208.2 218.1/237.7	200/225 225/250
											15	46.2/ 42.0	— 23.6	— 41.6	— —	— —	144.8/140.6 168.4/164.2	175/175 200/200
													— 23.6	— 41.6	29/36 29/36	75.1/ 86.6 75.1/ 86.6	151.6/160.8 181.1/190.3	175/175 200/200
													— 23.6	— 41.6	59/72 59/72	150.1/173.2 150.1/173.2	207.9/225.7 237.4/255.2	250/250 275/275
	460	414	508	19.9	114	19.9	114	2	1	2.7	7.5	11	— 12.6	— 23.6	— —	— —	61.2 73.8	80 90
													— 12.6	— 23.6	36 36	43.3 43.3	67.9 83.6	70 90
													— 12.6	— 23.6	72 72	86.6 86.6	100.4 116.1	110 125
											10	14	— 12.6	— 23.6	— —	— —	64.2 76.8	80 90
													— 12.6	— 23.6	36 36	43.3 43.3	71.6 87.4	80 90
													— 12.6	— 23.6	72 72	86.6 86.6	104.1 119.9	110 125
											15	21	— 12.6	— 23.6	— —	— —	71.2 83.8	90 100
													— 12.6	— 23.6	36 36	43.3 43.3	80.4 96.1	90 100
													— 12.6	— 23.6	72 72	86.6 86.6	112.9 128.6	125 150
	575	518	632	16.0	91	16.0	91	2	1	2.4	7.5	9	— 12.6	— 23.6	— —	— —	49.8 62.4	60 70
													— 12.6	— 23.6	36 36	34.6 34.6	54.6 70.3	60 80
													— 12.6	— 23.6	72 72	69.3 69.3	80.5 96.3	90 100
											10	11	— 12.6	— 23.6	— —	— —	51.8 64.4	60 80
													— 12.6	— 23.6	36 36	34.6 34.6	57.1 72.8	60 80
													— 12.6	— 23.6	72 72	69.3 69.3	83.0 98.8	90 100
											15	17	— 12.6	— 23.6	— —	— —	57.8 70.4	70 80
													— 12.6	— 23.6	36 36	34.6 34.6	64.6 80.3	70 90
													— 12.6	— 23.6	72 72	69.3 69.3	90.5 106.3	100 110

Table 4 — Electrical Data — 50EJ,EK,EW,EY024-048 (cont)

UNIT SIZE	NOMINAL VOLTAGE (3 Ph 60 Hz)	VOLTAGE RANGE		COMPRESSOR				OFM			IFM		POWER EXHAUST		ELECTRIC HEAT*		POWER SUPPLY	
				No. 1		No. 2												
		Min	Max	RLA	LRA	RLA	LRA	Qty	Hp	FLA (ea)	Hp	FLA	FLA	LRA	kW	FLA	MCA	MOCP†
030	208/230	187	254	57.1	266	39.1	228	2	1	5.3	10	30.8/28.0	— 23.6	— 41.6	— —	— —	151.9/149.1 175.5/172.7	200/200 225/225
													— 23.6	— 41.6	29/36 29/36	75.1/ 86.6 75.1/ 86.6	151.9/149.1 175.5/172.8	200/200 225/225
													— 23.6	— 41.6	59/72 59/72	150.1/173.2 150.1/173.2	188.6/208.2 218.1/237.7	200/225 225/250
											15	46.2/42.0	— 23.6	— 41.6	— —	— —	167.3/163.1 190.9/186.7	200/200 225/225
													— 23.6	— 41.6	29/36 29/36	75.1/ 86.6 75.1/ 86.6	167.3/163.1 190.9/186.7	200/200 225/225
													— 23.6	— 41.6	59/72 59/72	150.1/173.2 150.1/173.2	207.9/225.7 237.4/255.2	250/250 275/275
											20	59.4/54.0	— 23.6	— 41.6	— —	— —	180.5/175.1 204.1/198.7	225/225 250/250
													— 23.6	— 41.6	29/36 29/36	75.1/ 86.6 75.1/ 86.6	180.5/175.1 204.1/198.7	225/225 250/250
													— 23.6	— 41.6	59/72 59/72	150.1/173.2 150.2/173.2	224.4/240.7 253.9/270.2	275/275 300/300
	460	414	508	25.6	120	19.9	114	2	1	2.7	10	14	— 12.6	— 23.6	— —	— —	71.3 83.9	90 100
													— 12.6	— 23.6	36 36	43.3 43.3	71.6 87.4	90 100
													— 12.6	— 23.6	72 72	86.6 86.6	104.1 119.9	110 125
											15	21	— 12.6	— 23.6	— —	— —	78.3 90.9	100 110
													— 12.6	— 23.6	36 36	43.3 43.3	80.4 96.1	100 110
													— 12.6	— 23.6	72 72	86.6 86.6	112.9 128.6	125 150
											20	27	– 12.6	— 23.6	— —	— —	84.3 96.9	100 110
													— 12.6	— 23.6	36 36	43.3 43.3	87.9 103.6	100 110
													— 12.6	— 23.6	72 72	86.6 86.6	120.4 136.1	125 150
	575	518	632	20.5	96	16.0	91	2	1	2.4	10	11	— 12.6	— 23.6	— —	— —	57.4 70.0	70 90
													— 12.6	— 23.6	36 36	34.6 34.6	57.4 72.8	70 90
													— 12.6	— 23.6	72 72	69.3 69.3	83.0 98.8	90 100
											15	17	— 12.6	— 23.6	— —	— —	63.4 76.0	80 90
													— 12.6	— 23.6	36 36	34.6 34.6	64.6 80.3	80 90
													— 12.6	— 23.6	72 72	69.3 69.3	90.5 106.3	100 110
											20	22	— 12.6	— 23.6	— —	— —	68.4 81.0	80 100
													— 12.6	— 23.6	36 36	34.6 34.6	70.8 86.6	80 100
													— 12.6	— 23.6	72 72	69.3 69.3	96.8 112.5	110 125

LEGEND

FLA — Full Load Amps
HACR — Heating, Air Conditioning and Refrigeration
IFM — Indoor (Evaporator) Fan Motor
LRA — Locked Rotor Amps
MCA — Minimum Circuit Amps
MOCP — Maximum Overcurrent Protection
NEC — National Electrical Code
OFM — Outdoor (Condenser) Fan Motor
RLA — Rated Load Amps

*Heater capacity (kW) is based on heater voltage of 208 v, 240 v, 480 v, and 575 v. If power distribution voltage to unit varies from rated heater voltage, heater kW will vary accordingly.
†Fuse or HACR circuit breaker.

NOTES:
1. In compliance with NEC requirements for multimotor and combination load equipment (refer to NEC Articles 430 and 440), the overcurrent protective device for the unit shall be fuse or HACR breaker. The Canadian units may be fuse or circuit breaker.
2. **Unbalanced 3-Phase Supply Voltage**
Never operate a motor where a phase imbalance in supply voltage is greater than 2%. Use the following formula to determine the percent of voltage imbalance.

$$\% \text{ Voltage Imbalance} = 100 \times \frac{\text{max voltage deviation from average voltage}}{\text{average voltage}}$$

EXAMPLE: Supply voltage is 460-3-60.

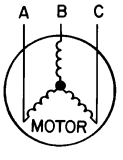

AB = 452 v
BC = 464 v
AC = 455 v

$$\text{Average Voltage} = \frac{452 + 464 + 455}{3} = \frac{1371}{3} = 457$$

Determine maximum deviation from average voltage.
(AB) 457 − 452 = 5 v
(BC) 464 − 457 = 7 v
(AC) 457 − 455 = 2 v

Maximum deviation is 7 v.

Determine percent of voltage imbalance.

$$\% \text{ Voltage Imbalance} = 100 \times \frac{7}{457} = 1.53\%$$

This amount of phase imbalance is satisfactory as it is below the maximum allowable 2%.

IMPORTANT: If the supply voltage phase imbalance is more than 2%, contact your local electric utility company immediately.

3. MCA calculation for units with electric heaters over 50 kW = (1.25 x IFM amps) + (1.00 x heater FLA).

Table 4 — Electrical Data — 50EJ,EK,EW,EY024-048 (cont)

UNIT SIZE	NOMINAL VOLTAGE (3 Ph 60 Hz)	VOLTAGE RANGE		COMPRESSOR				OFM			IFM		POWER EXHAUST		ELECTRIC HEAT*		POWER SUPPLY	
				No. 1		No. 2												
		Min	Max	RLA	LRA	RLA	LRA	Qty	Hp	FLA (ea)	Hp	FLA	FLA	LRA	kW	FLA	MCA	MOCP†
034	208/230	187	254	57.1	266	57.1	266	2	1	5.3	10	30.8/28.0	— 23.6	— 41.6	— —	— —	169.9/167.1 193.5/190.7	225/200 250/225
													— 23.6	— 41.6	29/36 29/36	75.1/ 86.6 75.1/ 86.6	169.9/167.1 193.5/190.7	225/200 250/225
													— 23.6	— 41.6	59/72 59/72	150.1/173.2 150.1/173.2	188.6/208.2 218.1/237.7	225/225 250/250
											15	46.2/42.0	— 23.6	— 41.6	— —	— —	185.3/181.1 208.9/204.7	225/225 250/250
													— 23.6	— 41.6	29/36 29/36	75.1/ 86.6 75.1/ 86.6	185.3/181.1 208.9/204.7	225/225 250/250
													— 23.6	— 41.6	59/72 59/72	150.1/173.2 150.1/173.2	207.9/225.7 237.4/255.2	250/250 275/275
											20	59.4/54.0	— 23.6	— 41.6	— —	— —	198.5/193.1 222.1/216.7	250/250 275/250
													— 23.6	— 41.6	29/36 29/36	75.1/ 86.6 75.1/ 86.6	198.5/193.1 222.1/216.7	250/250 275/250
													— 23.6	— 41.6	59/72 59/72	150.1/173.2 150.1/173.2	224.4/240.7 253.9/270.2	275/275 300/300
	460	414	508	25.6	120	25.6	120	2	1	2.7	10	14	— 12.6	— 23.6	— —	— —	77.0 89.6	100 110
													— 12.6	— 23.6	36 36	43.3 43.3	77.0 89.6	100 110
													— 12.6	— 23.6	72 72	86.6 86.6	104.1 119.9	110 125
											15	21	— 12.6	— 23.6	— —	— —	84.0 96.6	100 110
													— 12.6	— 23.6	36 36	43.3 43.3	84.0 96.6	100 110
													— 12.6	— 23.6	72 72	86.6 86.6	112.9 128.6	125 150
											20	27	— 12.6	— 23.6	— —	— —	90.0 102.6	110 125
													— 12.6	— 23.6	36 36	43.3 43.3	90.0 103.6	110 125
													— 12.6	— 23.6	72 72	86.6 86.6	120.4 136.1	125 150
	575	518	632	20.5	96	20.5	96	2	1	2.4	10	11	— 12.6	— 23.6	— —	— —	61.9 74.5	80 90
													— 12.6	— 23.6	36 36	34.6 34.6	61.9 74.5	70 90
													— 12.6	— 23.6	72 72	69.3 69.3	83.0 98.8	90 100
											15	17	— 12.6	— 23.6	— —	— —	67.9 80.5	80 100
													— 12.6	— 23.6	36 36	34.6 34.6	67.9 80.5	80 100
													— 12.6	— 23.6	72 72	69.3 69.3	90.5 106.3	100 110
											20	22	— 12.6	— 23.6	— —	— —	72.9 85.5	90 100
													— 12.6	— 23.6	36 36	34.6 34.6	72.9 86.6	90 100
													— 12.6	— 23.6	72 72	69.3 69.3	96.8 112.5	110 125

Table 4 — Electrical Data — 50EJ,EK,EW,EY024-048 (cont)

UNIT SIZE	NOMINAL VOLTAGE (3 Ph 60 Hz)	VOLTAGE RANGE		COMPRESSOR				OFM			IFM		POWER EXHAUST		ELECTRIC HEAT*		POWER SUPPLY	
				No. 1		No. 2												
		Min	Max	RLA	LRA	RLA	LRA	Qty	Hp	FLA (ea)	Hp	FLA	FLA	LRA	kW	FLA	MCA	MOCP†
038	208/230	187	254	57.1	266	57.1	266	4	1	5.3	10	30.8/28.0	— 23.6	— 41.6	— —	— —	180.5/177.7 204.1/201.3	225/225 250/250
													— 23.6	— 41.6	29/36 29/36	75.1/ 86.6 75.1/ 86.6	180.5/177.7 204.1/201.3	225/225 250/250
													— 23.6	— 41.6	59/72 59/72	150.1/173.2 150.1/173.2	188.6/208.2 218.1/237.7	225/225 250/250
											15	46.2/42.0	— 23.6	— 41.6	— —	— —	195.9/191.7 219.5/215.3	250/225 275/250
													— 23.6	— 41.6	29/36 29/36	75.1/ 86.6 75.1/ 86.6	195.9/191.7 219.5/215.3	250/225 275/250
													— 23.6	— 41.6	59/72 59/72	150.1/173.2 150.1/173.2	207.9/225.7 237.4/255.2	250/250 275/275
											20	59.4/54.0	— 23.6	— 41.6	— —	— —	209.1/203.7 232.7/227.3	250/250 275/275
													— 23.6	— 41.6	29/36 29/36	75.1/ 86.6 75.1/ 86.6	209.1/203.7 232.7/227.3	250/250 275/275
													— 23.6	— 41.6	59/72 59/72	150.1/173.2 150.1/173.2	224.4/240.7 253.9/270.2	275/275 300/300
	460	414	508	25.6	120	25.6	120	4	1	2.7	10	14	— 12.6	— 23.6	— —	— —	82.4 95.0	100 110
													— 12.6	— 23.6	36 36	43.3 43.3	82.4 95.0	100 110
													— 12.6	— 23.6	72 72	86.6 86.6	104.1 119.9	110 125
											15	21	— 12.6	— 23.6	— —	— —	89.4 102.0	110 125
													— 12.6	— 23.6	36 36	43.3 43.3	89.4 102.0	110 125
													— 12.6	— 23.6	72 72	86.6 86.6	112.9 128.6	125 150
											20	27	— 12.6	— 23.6	— —	— —	95.4 108.0	110 125
													— 12.6	— 23.6	36 36	43.3 43.3	95.4 108.0	110 125
													— 12.6	— 23.6	72 72	86.6 86.6	120.4 136.1	125 150
	575	518	632	20.5	96	20.5	96	4	1	2.4	10	11	— 12.6	— 23.6	— —	— —	66.7 79.3	80 90
													— 12.6	— 23.6	36 36	34.6 34.6	66.7 79.3	80 90
													— 12.6	— 23.6	72 72	69.3 69.3	83.0 98.8	90 100
											15	17	— 12.6	— 23.6	— —	— —	72.7 85.3	90 100
													— 12.6	— 23.6	36 36	34.6 34.6	72.7 85.3	80 100
													— 12.6	— 23.6	72 72	69.3 69.3	90.5 106.3	100 110
											20	22	— 12.6	— 23.6	— —	— —	77.7 90.3	90 110
													— 12.6	— 23.6	36 36	34.6 34.6	77.7 90.3	90 110
													— 12.6	— 23.6	72 72	69.3 69.3	96.8 112.5	110 125

LEGEND

FLA — Full Load Amps
HACR — Heating, Air Conditioning and Refrigeration
IFM — Indoor (Evaporator) Fan Motor
LRA — Locked Rotor Amps
MCA — Minimum Circuit Amps
MOCP — Maximum Overcurrent Protection
NEC — National Electrical Code
OFM — Outdoor (Condenser) Fan Motor
RLA — Rated Load Amps

*Heater capacity (kW) is based on heater voltage of 208 v, 240 v, 480 v, and 575 v. If power distribution voltage to unit varies from rated heater voltage, heater kW will vary accordingly.
†Fuse or HACR circuit breaker.

NOTES:
1. In compliance with NEC requirements for multimotor and combination load equipment (refer to NEC Articles 430 and 440), the overcurrent protective device for the unit shall be fuse or HACR breaker. The Canadian units may be fuse or circuit breaker.
2. **Unbalanced 3-Phase Supply Voltage**
Never operate a motor where a phase imbalance in supply voltage is greater than 2%. Use the following formula to determine the percent of voltage imbalance.

$$\% \text{ Voltage Imbalance} = 100 \times \frac{\text{max voltage deviation from average voltage}}{\text{average voltage}}$$

EXAMPLE: Supply voltage is 460-3-60.

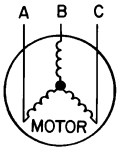

AB = 452 v
BC = 464 v
AC = 455 v

$$\text{Average Voltage} = \frac{452 + 464 + 455}{3} = \frac{1371}{3} = 457$$

Determine maximum deviation from average voltage.
(AB) 457 − 452 = 5 v
(BC) 464 − 457 = 7 v
(AC) 457 − 455 = 2 v

Maximum deviation is 7 v.

Determine percent of voltage imbalance.

$$\% \text{ Voltage Imbalance} = 100 \times \frac{7}{457} = 1.53\%$$

This amount of phase imbalance is satisfactory as it is below the maximum allowable 2%.

IMPORTANT: If the supply voltage phase imbalance is more than 2%, contact your local electric utility company immediately.

3. MCA calculation for units with electric heaters over 50 kW = (1.25 x IFM amps) + (1.00 x heater FLA).

Table 4 — Electrical Data — 50EJ,EK,EW,EY024-048 (cont)

UNIT SIZE	NOMINAL VOLTAGE (3 Ph 60 Hz)	VOLTAGE RANGE		COMPRESSOR				OFM			IFM		POWER EXHAUST		ELECTRIC HEAT*		POWER SUPPLY	
				No. 1		No. 2												
		Min	Max	RLA	LRA	RLA	LRA	Qty	Hp	FLA (ea)	Hp	FLA	FLA	LRA	kW	FLA	MCA	MOCP†
	208/230	187	254	69.2	345	69.2	345	4	1	5.3	15	46.2/ 42.0	— 23.6	— 41.6	— —	— —	223.1/218.9 246.7/242.5	275/275 300/300
													— 23.6	— 41.6	29/36 29/36	75.1/ 86.6 75.1/ 86.6	223.1/218.9 246.7/242.5	275/275 300/300
													— 23.6	— 41.6	59/72 59/72	150.1/173.2 150.1/173.2	223.1/225.7 246.7/255.2	275/275 300/300
											20	59.4/ 54.0	— 23.6	— 41.6	— —	— —	236.3/230.9 259.9/254.5	300/300 300/300
													— 23.6	— 41.6	29/36 29/36	75.1/ 86.6 75.1/ 86.6	236.3/230.9 259.9/254.5	300/300 300/300
													— 23.6	— 41.6	59/72 59/72	150.1/173.2 150.1/173.2	236.3/240.7 259.9/270.2	300/300 300/300
											25	74.8/ 68.0	— 23.6	— 41.6	— —	— —	251.7/244.9 275.3/268.5	300/300 300/300
													— 23.6	— 41.6	29/36 29/36	75.1/ 86.6 75.1/ 86.6	251.7/244.9 275.3/268.5	300/300 300/300
													— 23.6	— 41.6	59/72 59/72	150.1/173.2 150.2/173.2	251.7/258.2 275.3/287.7	300/300 300/300
044	460	414	508	28.8	173	28.8	173	4	1	2.7	15	21	— 12.6	— 23.6	— —	— —	96.6 109.2	125 125
													— 12.6	— 23.6	36 36	43.3 43.3	96.6 109.2	125 125
													— 12.6	— 23.6	72 72	86.6 86.6	112.9 128.6	125 150
											20	27	— 12.6	— 23.6	— —	— —	102.6 115.2	125 125
													— 12.6	— 23.6	36 36	43.3 43.3	102.6 115.2	125 125
													— 12.6	— 23.6	72 72	86.6 86.6	120.4 136.1	150 150
											25	34	- 12.6	— 23.6	— —	— —	109.6 122.2	125 150
													— 12.6	— 23.6	36 36	43.3 43.3	109.6 122.2	125 150
													— 12.6	— 23.6	72 72	86.6 86.6	129.1 144.9	150 175
	575	518	632	26.7	120	26.7	120	4	1	2.4	15	17	— 12.6	— 23.6	— —	— —	86.7 99.3	110 125
													— 12.6	— 23.6	36 36	34.6 34.6	86.7 99.3	110 125
													— 12.6	— 23.6	72 72	69.3 69.3	91.4 106.3	110 125
											20	22	— 12.6	— 23.6	— —	— —	91.7 104.3	110 125
													— 12.6	— 23.6	36 36	34.6 34.6	91.7 104.3	110 125
													— 12.6	— 23.6	72 72	69.3 69.3	96.8 112.5	125 125
											25	27	— 12.6	— 23.6	— —	— —	96.7 109.3	110 125
													— 12.6	— 23.6	36 36	34.6 34.6	96.7 109.3	110 125
													— 12.6	— 23.6	72 72	69.3 69.3	103.0 118.8	125 125

Table 3 — Electrical Data — 50EJ,EK,EW,EY024-048 (cont)

UNIT SIZE	NOMINAL VOLTAGE (3 Ph 60 Hz)	VOLTAGE RANGE		COMPRESSOR				OFM			IFM		POWER EXHAUST		ELECTRIC HEAT*		POWER SUPPLY	
				No. 1		No. 2												
		Min	Max	RLA	LRA	RLA	LRA	Qty	Hp	FLA (ea)	Hp	FLA	FLA	LRA	kW	FLA	MCA	MOCP†
048	208/230	187	254	82.1	446	69.2	345	4	1	5.3	20	59.4/ 54.0	— 23.6	— 41.6	— —	— —	252.4/247.0 276.0/270.6	300/300 300/300
													— 23.6	— 41.6	29/36 29/36	75.1/ 86.6 75.1/ 86.6	252.4/247.0 276.0/270.6	300/300 300/300
													— 23.6	— 41.6	59/72 59/72	150.1/173.2 150.1/173.2	252.4/247.0 276.0/270.6	300/300 300/300
											25	74.8/ 68.0	— 23.6	— 41.6	— —	— —	267.8/261.0 291.4/284.6	300/300 300/300
													— 23.6	— 41.6	29/36 29/36	75.1/ 86.6 75.1/ 86.6	267.8/261.0 291.4/284.6	300/300 300/300
													— 23.6	— 41.6	59/72 59/72	150.1/173.2 150.1/173.2	267.8/261.0 291.4/284.6	300/300 300/300
											30	88.0/ 80.0	— 23.6	— 41.6	— —	— —	281.0/273.0 304.6/296.6	300/300 350/300
													— 23.6	— 41.6	29/36 29/36	75.1/ 86.6 75.1/ 86.6	281.0/273.0 304.6/296.6	300/300 350/300
													— 23.6	— 41.6	59/72 59/72	150.1/173.2 150.2/173.2	281.0/273.0 304.6/296.6	300/300 350/300
	460	414	508	42.3	223	28.8	173	4	1	2.7	20	27	— 12.6	— 23.6	— —	— —	119.5 132.1	150 150
													— 12.6	— 23.6	36 36	43.3 43.3	119.5 132.1	150 150
													— 12.6	— 23.6	72 72	86.6 86.6	120.4 136.1	150 150
											25	34	— 12.6	— 23.6	— —	— —	126.5 139.1	150 175
													— 12.6	— 23.6	36 36	43.3 43.3	126.5 139.1	150 175
													— 12.6	— 23.6	72 72	86.6 86.6	129.1 144.9	150 175
											30	40	– 12.6	— 23.6	— —	— —	132.5 145.1	150 175
													— 12.6	— 23.6	36 36	43.3 43.3	132.5 145.1	150 175
													— 12.6	— 23.6	72 72	86.6 86.6	136.6 152.4	175 175
	575	518	632	34.6	164	26.7	120	4	1	2.4	20	22	— 12.6	— 23.6	— —	— —	101.6 114.2	125 125
													— 12.6	— 23.6	36 36	34.6 34.6	101.6 114.2	125 125
													— 12.6	— 23.6	72 72	69.3 69.3	101.6 114.2	125 125
											25	27	— 12.6	— 23.6	— —	— —	106.6 119.2	125 150
													— 12.6	— 23.6	36 36	34.6 34.6	106.6 119.2	125 150
													— 12.6	— 23.6	72 72	69.3 69.3	106.6 119.2	125 150
											30	32	— 12.6	— 23.6	— —	— —	111.6 124.2	125 150
													— 12.6	— 23.6	36 36	34.6 34.6	111.6 124.2	125 150
													— 12.6	— 23.6	72 72	69.3 69.3	111.6 124.2	125 150

LEGEND

FLA — Full Load Amps
HACR — Heating, Air Conditioning and Refrigeration
IFM — Indoor (Evaporator) Fan Motor
LRA — Locked Rotor Amps
MCA — Minimum Circuit Amps
MOCP — Maximum Overcurrent Protection
NEC — National Electrical Code
OFM — Outdoor (Condenser) Fan Motor
RLA — Rated Load Amps

*Heater capacity (kW) is based on heater voltage of 208 v, 240 v, 480 v, and 575 v. If power distribution voltage to unit varies from rated heater voltage, heater kW will vary accordingly.
†Fuse or HACR circuit breaker.

NOTES:
1. In compliance with NEC requirements for multimotor and combination load equipment (refer to NEC Articles 430 and 440), the overcurrent protective device for the unit shall be fuse or HACR breaker. The Canadian units may be fuse or circuit breaker.
2. **Unbalanced 3-Phase Supply Voltage**
Never operate a motor where a phase imbalance in supply voltage is greater than 2%. Use the following formula to determine the percent of voltage imbalance.

$$\% \text{ Voltage Imbalance} = 100 \times \frac{\text{max voltage deviation from average voltage}}{\text{average voltage}}$$

EXAMPLE: Supply voltage is 460-3-60.

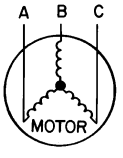

AB = 452 v
BC = 464 v
AC = 455 v

$$\text{Average Voltage} = \frac{452 + 464 + 455}{3} = \frac{1371}{3} = 457$$

Determine maximum deviation from average voltage.
(AB) 457 − 452 = 5 v
(BC) 464 − 457 = 7 v
(AC) 457 − 455 = 2 v

Maximum deviation is 7 v.

Determine percent of voltage imbalance.

$$\% \text{ Voltage Imbalance} = 100 \times \frac{7}{457} = 1.53\%$$

This amount of phase imbalance is satisfactory as it is below the maximum allowable 2%.

> IMPORTANT: If the supply voltage phase imbalance is more than 2%, contact your local electric utility company immediately.

3. MCA calculation for units with electric heaters over 50 kW = (1.25 x IFM amps) + (1.00 x heater FLA).

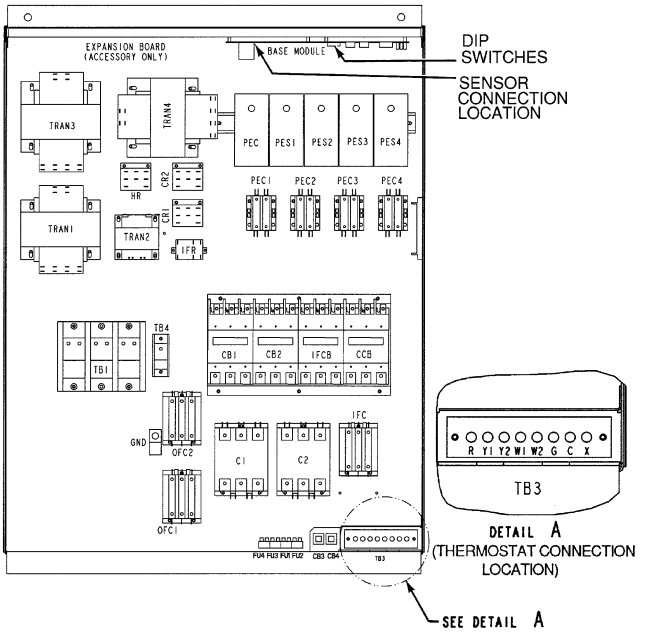

DIP — Dual In-Line Package
PEC – Power Exhaust Controller

Fig. 14 — Control Box Diagram (Sizes 024-034)

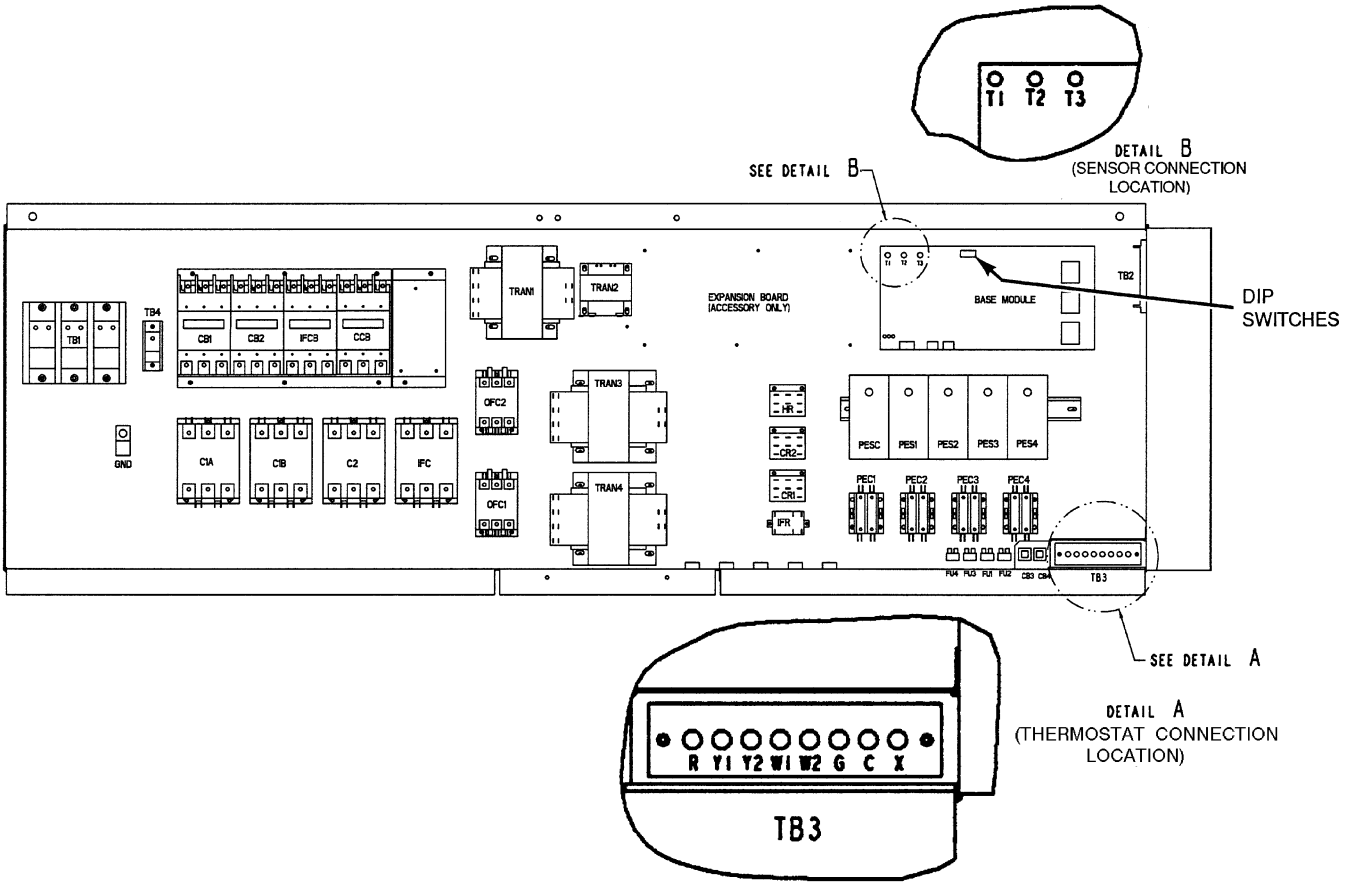

DIP — Dual In-Line Package
PEC — Power Exhaust Controller

Fig. 15 — Control Box Diagram (Sizes 038-048)

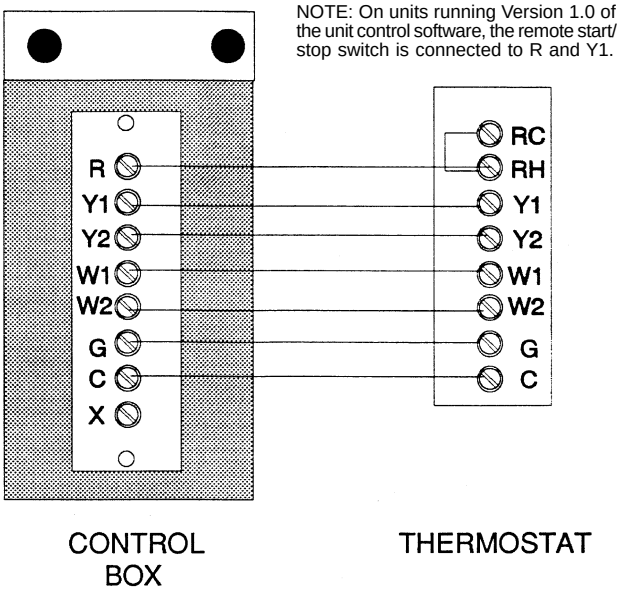

Fig. 16 — Field Control Thermostat Wiring

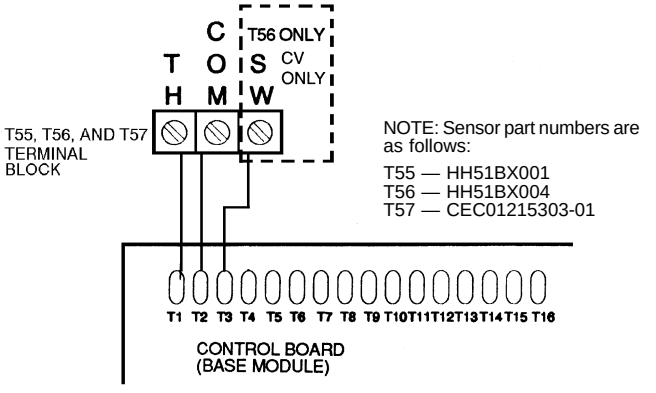

Fig. 17 — Field Control Temperature Sensor Wiring

Remote Field Control (Units Running Version 2.0 of Unit Control Software) — A switch closure across terminals R and W1 on TB-3 will initiate the Occupied mode. This can be done manually as well as through a field-supplied timeclock.

Service Tool, Building Supervisor, and Comfort Works — Access to the control board can be achieved through the terminal marked CCN via a 3-wire bus.

> IMPORTANT: Default bus address is 0. Default element number is 1. Refer to CCN literature for information on network addressing or changing CCN communication defaults.

Carrier Comfort Network Interface — The 50E units can be connected to the CCN. The communication bus wiring is supplied and installed in the field. Wiring consists of shielded, 3-conductor cable with drain wire.

The system elements are connected to the communication bus in a daisy chain arrangement. The positive pin of each system element communication connector must be wired to the positive pins of the system element on either side of it, the negative pins must be wired to the negative pins, and the signal pins must be wired to signal ground pins. Wiring connections for CCN should be made at the 3-pin plug (CCN located at the base board. Consult CCN literature for further information.

Conductors and drain wire must be 20 AWG minimum stranded, tinned copper. Individual conductors must be insulated with PVC, PVC/nylon, vinyl, Teflon, or polyethylene. An aluminum/polyester 100% foil shield and an outer jacket of PVC, PVC/nylon, chrome vinyl, or Teflon with a minimum operating temperature range of −20 C to 60 C (−4 F to 140 F) is required. Table 5 lists cables that meet the requirements.

Table 5 — CCN Connection Approved Shielded Cables

MANUFACTURER	CABLE PART NO.
Alpha	2413 or 5463
American	A22503
Belden	8772
Columbia	02525

> IMPORTANT: When connecting the CCN communication bus to a system element, use a color coding system for the entire network to simplify installation and checkout. See Table 6.

Table 6 — Color Code Recommendations

SIGNAL TYPE	CCN BUS CONDUCTOR INSULATION COLOR	CCN PLUG PIN NO.
Positive (+)	RED	1
Ground	WHITE	2
Negative (−)	BLACK	3

NOTE: If a cable with a different color scheme is selected, a similar color code should be adopted for the entire network.

At each system element, the shields of the communication bus cables must be tied together. If the communication bus is entirely within one building, the resulting continuous shield must be connected to a ground **at one point only**. If the communication bus cable exits from one building and enters another, the shields must be connected to grounds at the lightning suppressor in each building where the cable enters or exits the building (one point per building only).

To connect the unit to the network:

1. Turn off power to the control box.
2. Cut the CCN wire and strip the ends of the red (+), white (ground), and black (−) conductors. (If a different network color scheme is used, substitute appropriate colors.)
3. Remove the 3-pin male plug from the base module in the main control box, and connect the wires as follows:
   a. Insert and secure the red (+) wire to terminal 1 of the 3-pin plug.
   b. Insert and secure the white (ground) wire to terminal 2 of the 3-pin plug.
   c. Insert and secure the black (−) wire to terminal 3 of the 3-pin plug.
4. Insert the plug into the existing 3-pin mating connector on the base module in the main control box.

Step 8 — Make Outdoor-Air Inlet Adjustments

ECONOMIZER

NOTE: If accessory power exhaust or barometric relief packages are being added to the unit, install power exhaust or barometric relief before installing economizer hoods.

Economizer Hood Assembly — The economizer hood is shipped in a package secured to the outside of the unit and must be field-assembled. There are 2 hoods on every unit. The 50EW/EY units are side supply and side return. The return duct limits access to economizer filters from below. Filter tracks (mounting angle without tabs) must be installed correctly to allow access to economizer filters from each side. Perform the following procedure to assemble the economizer hood.

NOTE: Before assembly of the economizer hood, check along the outer edges of the economizer assembly for any seal strip protruding past the flanges. Trim the excess seal strip so that it is flush with the economizer assembly flanges.

1. Apply black seal strip (provided in package) to outside top-edge of hood sides. Wrap seal strip over edge to cover top flange (4 hood sides). Make sure seal strip covers screw holes. Allow strip to overhang ⅛-in. past the end opposite the mounting flange. See Fig. 18.
2. Assemble hood sides, top, and cross member with gasketed screws provided. See Fig. 19.
3. Attach 10 green speed clips (provided) to hood top.
4. Apply black seal strip (provided) to mounting flanges of hood sides being sure to cover mounting holes. See Fig. 20.
   NOTE: Each hood assembly has a slotted side that should be adjacent to the other hood when mounted to the unit.
5. Apply black seal strip (provided) to hood top mounting flange. Seal strip of hood top mounting flange must press tightly against seal strip of hood side mounting flanges. See Fig. 21.
6. Add gray foam strip (provided in package) to cross members on bottom tray. See Fig. 22.
7. Place gray foam strip (provided) on inside of slotted hood side between filter and cross member opposite the mounting end. See Fig. 23.
8. Attach gray foam strip (provided) to block-off baffle on outer face of flange. See Fig. 24.
9. Remove the screws on each end and along top of damper assembly of unit. Remove top 2 screws on each side of filter panel under damper assembly. Set hood assembly in place and attach to unit using these screws.
10. Attach accessory enthalpy bracket on hood side furthest from control box end. Locate bracket on inside upper right-hand corner of economizer hood using hood mounting holes. Mount outdoor-air thermistor to enthalpy bracket (if purchased). Attach and wire enthalpy assembly. Place quick connects on enthalpy wires.
11. Remove screws along bottom of damper assembly. Locate and mount blockoff baffle using these screws.
12. Assemble 2 filter tracks side-by-side with the assembled ends together.
13. Attach mounting angle (without tabs) to the assembled end of the filter track. See Fig. 25.
14. Attach 6 green speed clips (provided) to mounting angles. Engagement section of clip faces inside of rack.

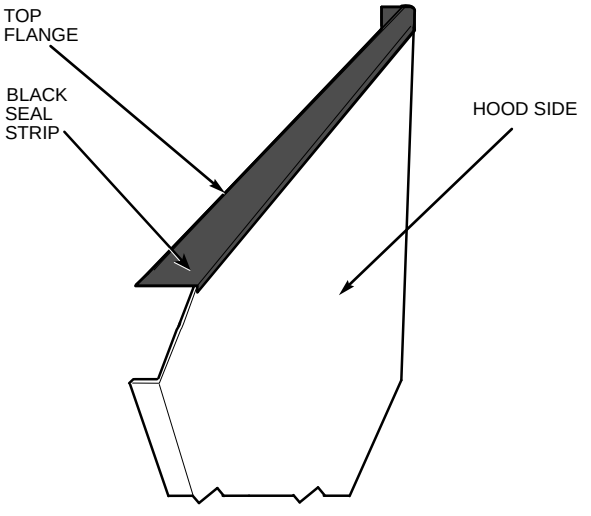

Fig. 18 — Adding Seal Strip to Top of Hood Sides

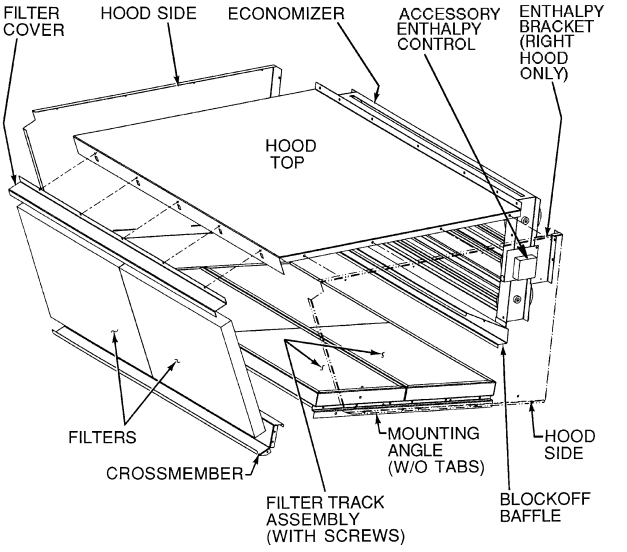

NOTE: Left side economizer hood has mounting angle without tabs and filter track assembled end on the opposite side.

Fig. 19 — Economizer Hood Assembly (Right-Side Economizer Hood Shown)

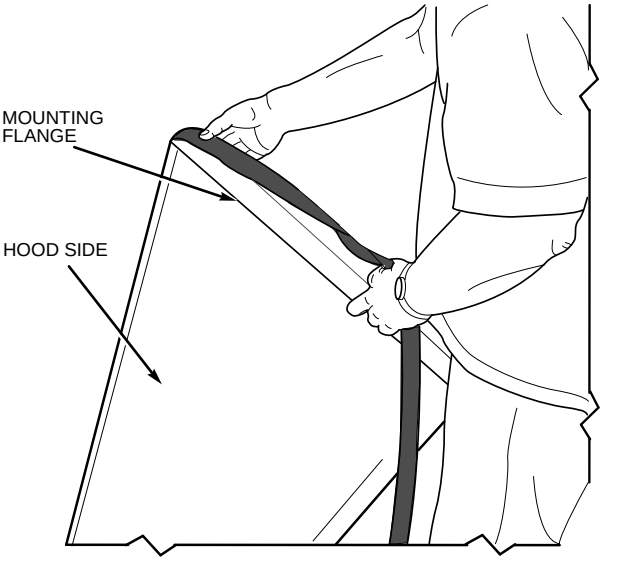

Fig. 20 — Adding Seal Strip to Mounting Flange of Hood Sides

15. Attach remaining mounting angle (with tabs) to other end of the filter track with no. 10 screws provided. See Fig. 26.
16. Place filter track assembly in bottom of hood by placing tabbed end into slotted side (with tab on bottom) and attaching opposite end to hood with speed clips and gasketed screws provided. Tabs can be hand bent after they have been inserted into the side.
    NOTE: The filter track assembly end with screws should face away from the other hood when mounted on the unit.
    NOTE: Tabs from both filter tracks will be in the same space. After one filter track has been inserted into board, bend the tabs so they will not interfere with installation of the second hood.
17. Attach black seal strip (provided) to filter cover. Seal strip should be applied to the center of the large flange making sure to cover holes. See Fig. 27.
18. Slide two 20 x 25-in. filters into cross members of hood assembly. Attach filter cover over filters with screws and speed clips provided.

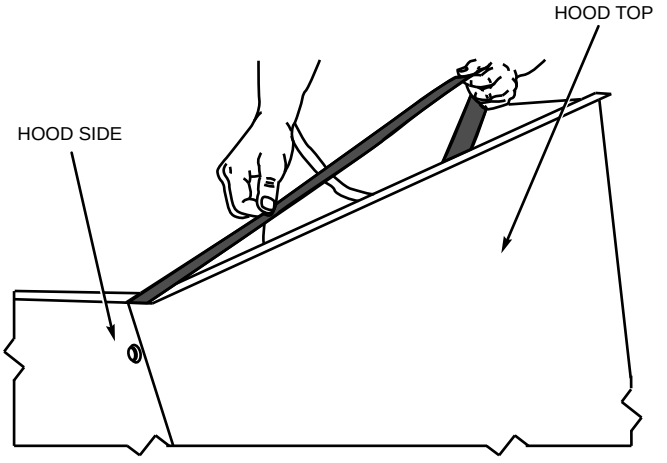

Fig. 21 — Adding Seal Strip to Hood Top Mounting Flange

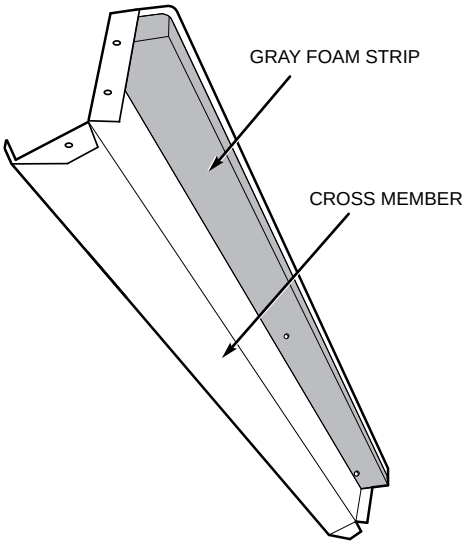

Fig. 22 — Adding Foam Strip to Cross Member

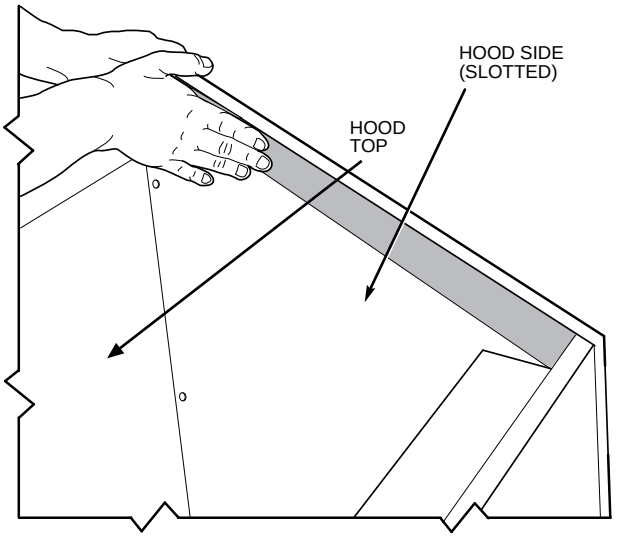

Fig. 23 — Adding Foam Strip to Hood Side

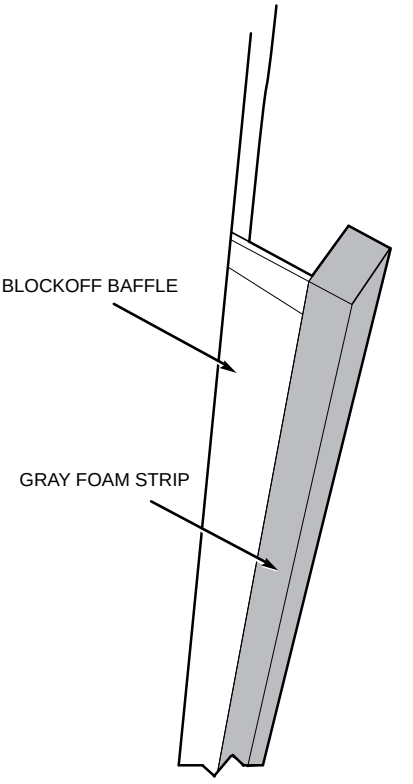

Fig. 24 — Adding Foam Strip to Blockoff Baffle

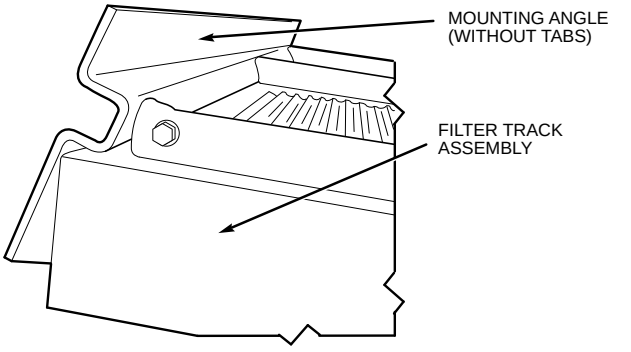

Fig. 25 — Mounting Angle (Without Tabs) Attached to Filter Track Assembly

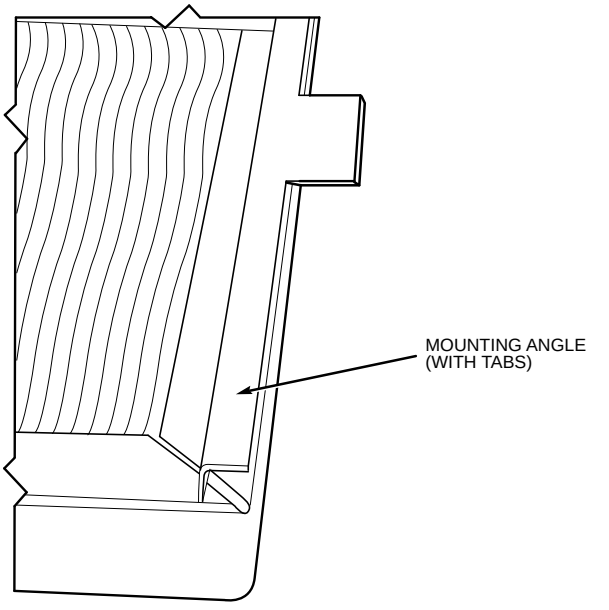

Fig. 26 — Mounting Angle (With Tabs) Attached to Filter Track Assembly

Minimum Damper Position Setting — Setting of the outdoor air damper position is performed in conjunction with a shortened version of the field-run test. This is performed by first opening DIP (Dual In-Line Package) switch no. 6 then no. 4. See Fig. 17 and Table 7.

The outdoor-air damper closes. The control allows 90 seconds for the damper to close in case it is in the full open position. Next, the indoor-fan contactor will energize. The outdoor-air damper will remain at 0% for 30 seconds. It will then move to the 10% position for another 30 seconds. This will be repeated at every 10% increment for 30 seconds until the damper reaches 100% open. Close DIP switch no. 6 during the 30 seconds immediately after the desired outdoor air minimum damper position. The 30-second time period is to allow time where DIP switch no. 6 can be closed. The default value of the minimum outdoor air damper position is 20%. If the desired minimum position is 30%, allow the damper position to go to 10% for 30 seconds, then 20% for 30 seconds, and when it reaches 30% close DIP switch no. 6 during the 30-second period following the 30% position.

The minimum outdoor air damper position is now set.

ECONOMIZER SETTINGS

Accessory Enthalpy Control (Fig. 28) — The control (HH57AC077) is mounted in the economizer hood. See Fig. 19. The enthalpy setting adjustment is on the enthalpy control. For maximum benefit of outdoor air, set enthalpy control to A. See Fig. 29 and 30.

Accessory Differential Enthalpy Control — The control (HH57AC077), in conjunction with the accessory enthalpy sensor (HH57AC078), controls economizer operation according to the differential enthalpy. The control is mounted in the economizer hood. The sensor is mounted in the return duct (50EJ/EK) or return air plenum (50EW/EY).

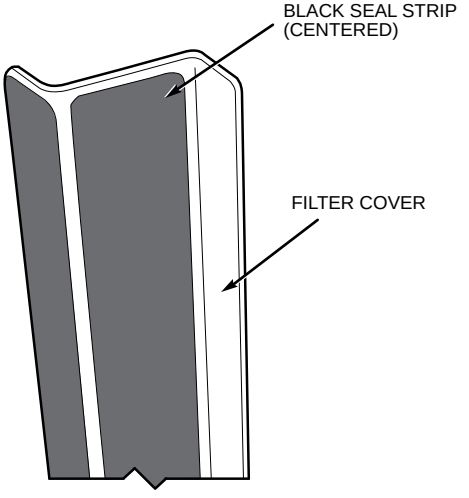

Fig. 27 — Attaching Seal Strip to Filter Cover

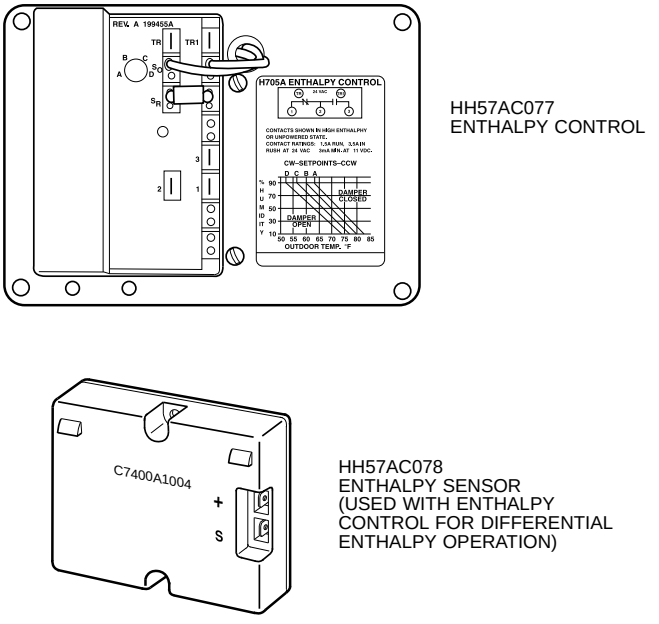

Fig. 28 — Differential Enthalpy Control and Sensor

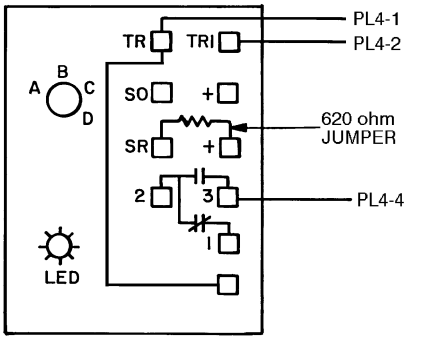

NOTE: Switches shown in high enthalpy state. Terminals 2 and 3 close on enthalpy decrease.

Fig. 29 — Wire Connections for Solid State Enthalpy Control (HH57AC077)

CONTROL CURVE	CONTROL POINT (APPROX. DEG.) AT 50% RH
A	73 (23)
B	70 (21)
C	67 (19)
D	63 (17)

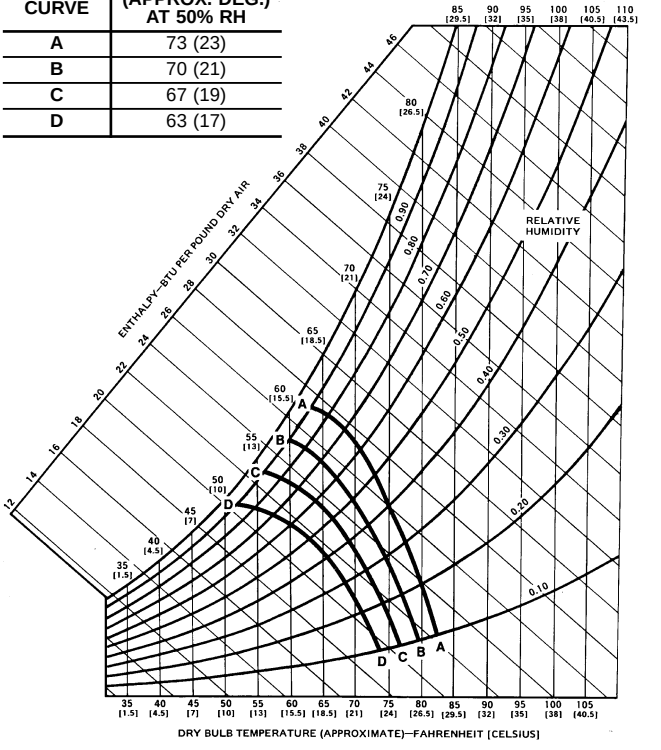

RH — Relative Humidity

Fig. 30 — Psychrometric Chart for Enthalpy Control

Step 9 — Position Power Exhaust/Barometric Relief Damper Hood — All electrical connections have been made and adjusted at the factory. The power exhaust blowers and barometric relief dampers are shipped assembled and tilted back into the unit for shipping. Brackets and extra screws are shipped in shrink wrap around the dampers. If ordered, each unit will have 4 power exhaust blowers and motors or 4 barometric relief dampers.

1. Remove 9 screws holding each damper assembly in place. See Fig. 31. Each damper assembly is secured with 3 screws on each side and 3 screws along the bottom. Save screws.
2. Pivot each damper assembly outward until edges of damper assembly rest against inside wall of unit.

> **⚠ CAUTION**
>
> Be careful when tilting blower assembly. Hoods and blowers are heavy and can cause injury if dropped.

3. Secure each damper assembly to unit with 6 screws across top (3 screws provided) and bottom (3 screws from Step 1) of damper.
4. With screws saved from Step 1, install brackets on each side of damper assembly.
5. Remove tape from damper blades.

VAV DUCT PRESSURE TRANSDUCER — The VAV duct pressure transducer (VAV inverter pressure transducer) is located behind the filter access door on the lower inner panel. See Fig. 32. A section of ¼-in. plastic tubing must be run from the high-pressure tap on the differential pressure switch and connected to a tap in the supply-air duct. The tap is usually located ⅔ of the way out on the main supply duct. Remove plug button in panel to route tubing.

VAV BUILDING PRESSURE TRANSDUCER — The VAV building pressure transducer (modulating power exhaust pressure transducer) is located behind the filter access door on the inner panel. See Fig. 32. A section of ¼-in. plastic tubing must be run from the high-pressure tap on the differential pressure switch to the conditioned space. The pressure tube must be terminated in the conditioned space where a constant pressure is required. This location is usually in an entrance lobby so that the building exterior doors will open and close properly. Remove plug button in panel to route tubing.

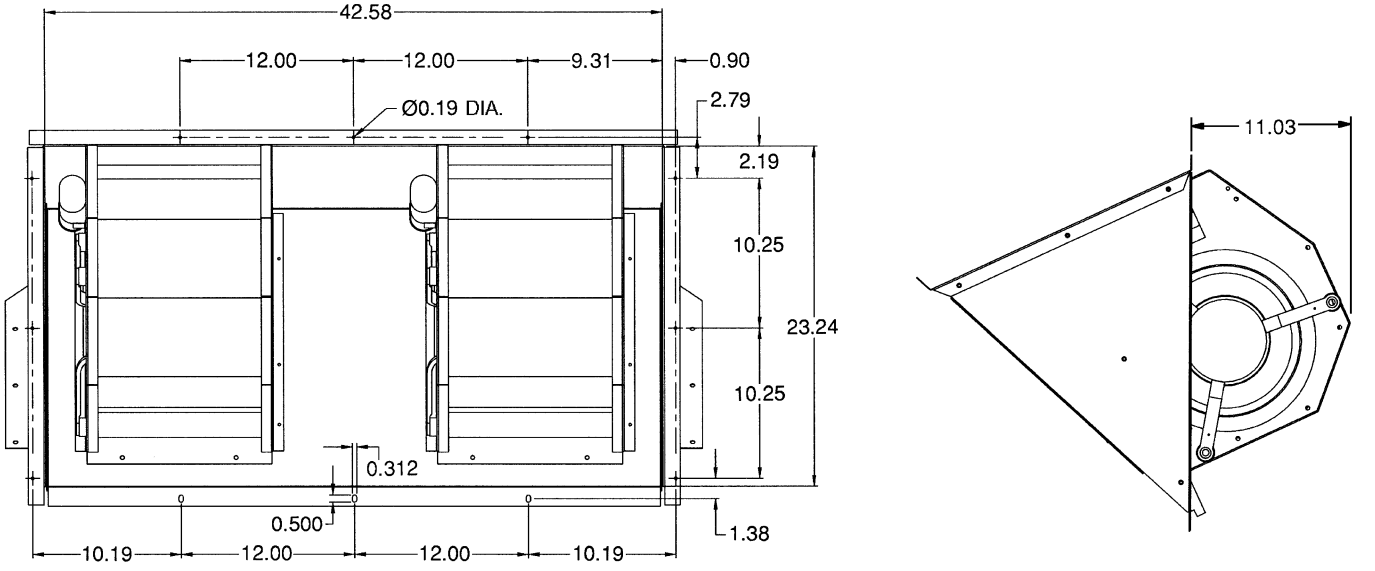

NOTES:
1. Unless otherwise specified, all dimensions are to outside of part.
2. Dimensions are in inches.

Fig. 31 — Barometric Relief Damper and Power Exhaust Mounting Details

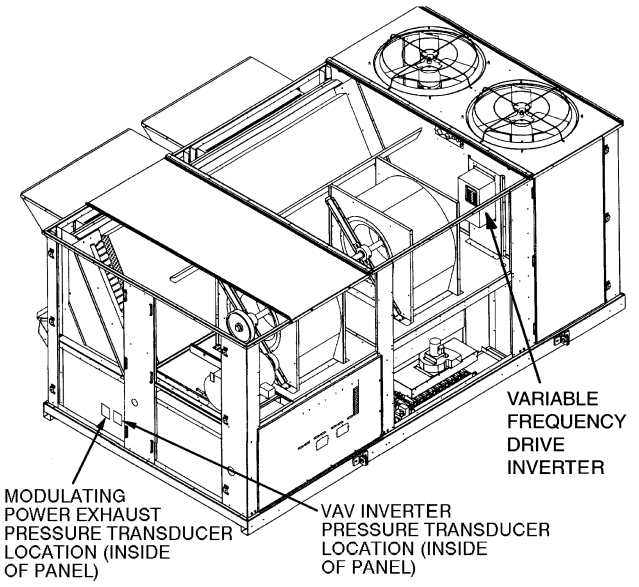

VAV — Variable Air Volume

Fig. 32 — Pressure Transducer Locations

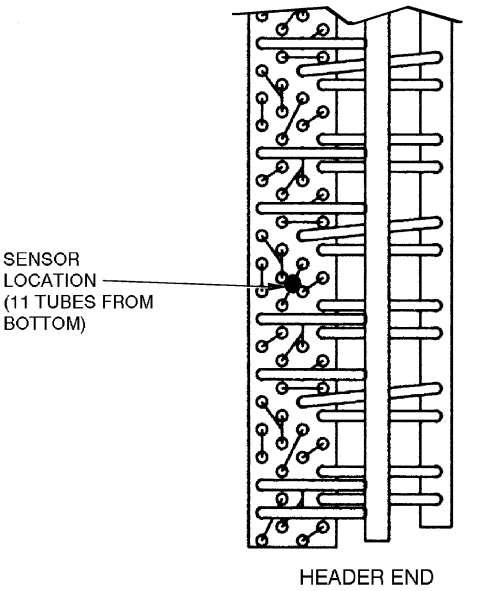

Fig. 33A — Motormaster III Sensor Location (Sizes 024-034)

Step 10 — Install Accessories — After all the factory-installed options have been adjusted, install all field-installed accessories. Refer to the accessory installation instructions included with each accessory.

MOTORMASTER® III SENSOR LOCATION — Motormaster III sensor locations are shown in Fig. 33A-33C. Refer to the Motormaster III installation instructions for wiring and installation information.

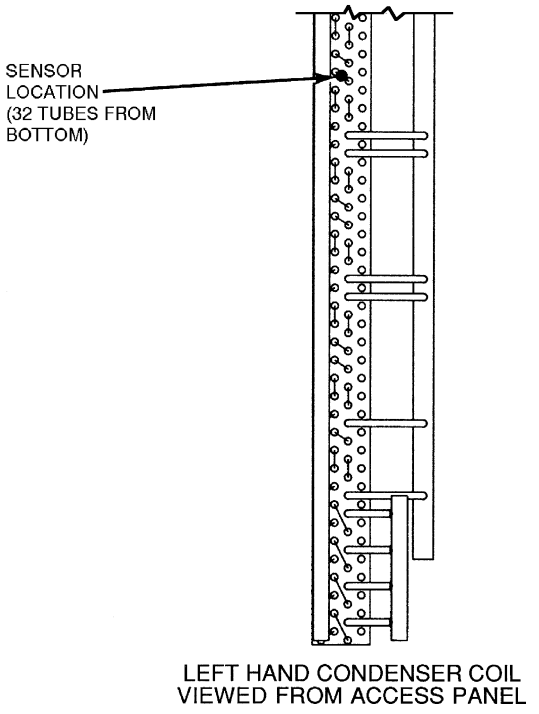

Fig. 33B — Motormaster® III Sensor Location (Sizes 038 and 044)

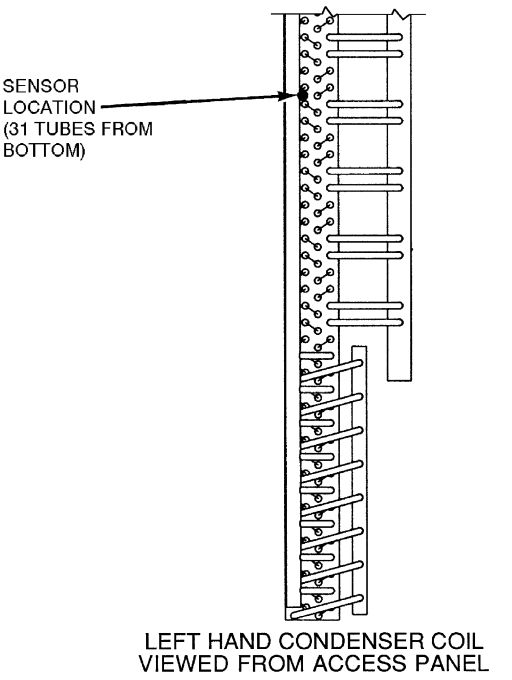

Fig. 33C — Motormaster III Sensor Location (Size 048)

START-UP

Use the following information and Start-Up Checklist on page CL-1 to check out unit PRIOR to start-up.

Unit Preparation — Check that unit has been installed in accordance with these installation instructions and applicable codes.

Compressor Mounting — Loosen the compressor holddown bolts until sidewise movement of the washer under each holddown bolt head can be obtained. Do not loosen completely as bolts are self-locking and will maintain adjustment.

Service Valves — Ensure that the suction, discharge, and liquid line service valves are open. Damage to the compressor could result if they are left closed.

Internal Wiring — Check all electrical connections in unit control boxes; tighten as required.

Refrigerant Service Ports — Each refrigerant system has one suction port located in the top of the compressor motor casing. All units also have one service port on the liquid line valve and one on the compressor discharge valve. Be sure that caps on the ports are tight.

Variable Frequency Drive (VFD) — The variable frequency drives are factory set. These settings include factory-installed jumpers and software configurations. The only configured set point is duct static pressure. An Operation Manual is shipped with each VAV unit. This manual should be used if the drive needs to be customized for a particular application.

To set the duct static pressure, perform the following steps. The factory setting is zero. The duct transducer has a range from 0 to 5 in. wg. The transducer output is 2 to 10 vdc, therefore, 0 to 5 in. wg is proportional to the 2 to 10 vdc and must be expressed to the VFD in terms of percentage of the frequency range. To do this, refer to Table 7. The set point value is a percentage of the maximum output frequency. Locate the duct static pressure closest to that desired and use the corresponding set point value. If necessary, interpolation between duct static pressures is permissible.

To set the VFD, the VFD must be powered up, however, since it is located near the indoor air fan, operation of the fan is not desirable. To disable the fan, perform the following procedure:

1. Open the indoor fan circuit breaker.
2. Remove the jumper between CC and ST on the terminal strip of the VFD (see Fig. 34).
3. Close the indoor fan circuit breaker. The VFD now is powered but the fan will not operate.
4. On the front of the VFD is a keypad and display which will be used to enter the set point. To access this field, press ‘‘SETUP’’ key, then press the ‘‘SETUP’’ key 6 times to scroll to the sixth parameter, which will display ‘‘Sr1.’’ This is the VFD set point listed in Table 7.
5. Press the ‘‘READ/WRITE’’ key. The set point value will be displayed. Use the up-arrow or down-arrow key to adjust the set point value to the value desired.
6. Press the ‘‘READ/WRITE’’ key again to enter the new value.
7. Open the indoor fan circuit breaker.
8. Replace the jumper between CC and ST on the terminal strip of the VFD.
9. Close the indoor fan circuit breaker, the VFD now is powered and the fan will operate.

NOTE: Any field measurement of supply fan amps must be taken with an RMS meter between the fan circuit breaker and fan contactor (upstream of VFD).

Table 7 — VFD Set Point

PRESSURE (in. wg)	VOLTAGE (vdc)	VFD SET POINT
0.00	2.0	12.0
0.25	2.4	14.4
0.50	2.8	16.8
0.75	3.2	19.2
1.00	3.6	21.6
1.25	4.0	24.0
1.50	4.4	26.4
1.75	4.8	28.8
2.00	5.2	31.2
2.25	5.6	33.6
2.50	6.0	36.0
2.75	6.4	38.4
3.00	6.8	40.8
3.25	7.2	43.2
3.50	7.6	45.6

VFD — Variable Frequency Drive

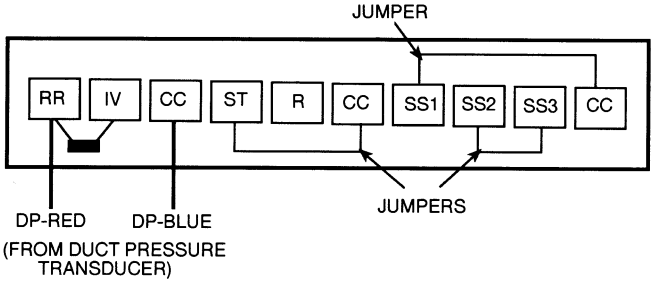

NOTE: Terminal strip is located inside the VFD (Variable Frequency Drive) at the bottom.

Fig. 34 — VFD Factory-Installed Jumpers

Power Exhaust — The optional non-modulating power exhaust (CV only) is a two-stage design where the operation of the exhaust fans is linked to economizer position. When the supply fan is running and the economizer is 25% open, the base module closes contacts, activating 2 exhaust fans. When the economizer position reaches 75% open, the base module activates the other 2 exhaust fans. The fans will turn off when the economizer closes below the same points. The economizer position set points that trigger the exhaust fans can be modified, but only through use of the Service Tool, Comfort Works, or Building Supervisor Software. If single-stage operation is desired, adjust the economizer set points to identical values at the desired point to activate all exhaust fans.

The optional modulating power exhaust (VAV standard, CV optional) is controlled by a modular electronic sequencer system. This system consists of a model R353 signal input module and 4 model S353 staging modules. The signal input module receives a 0 to 10 vdc signal from the building pressure transducer, which is mounted adjacent to the supply static transducer behind the filter access panel. The modules are mounted just below the unit control board. The left module is the R353, and the 4 modules on the right are S353 modules for stages 1 through 4. On the unit wiring label, the R353 is designated PESC, and the S353 modules are designated PES1 through PES4.

The building pressure transducer range is −0.5 to +0.5 in. wg. It is powered by a 0 to 10 vdc signal. A factory-installed hose at the ‘‘Lo’’ connection leads to atmosphere, and a field-supplied hose must be connected to the ‘‘Hi’’ connection and led into the building to a point where building pressure is to be controlled. There is a plug button in the bulkhead just above the transducers, for use in leading the hoses into the building via the return air ductwork.

There are 3 adjustments at the R353 module, all of which have been factory set. In the center of the circuit board is a set of 4 pins with a jumper, labeled J2. This determines the mode of operation. The bottom 2 pins must be jumpered for direct operation. Direct operation means that the staging modules are activated in sequence as the input signal increases.

At the upper right corner of the board is a set of 5 pins and jumper, which determines the time constant for the control. The time constant is the delay in response built into the controls. The jumper should be on the middle or bottom 2 pins, for the maximum time constant. The delay can be decreased, if desired, by moving the jumper progressively upward, always jumpering adjacent pins.

At the lower left corner of the board below the terminal strip is a resistor marked R27. This must be removed in order to obtain the 0 to 10 vdc signal output. There will not be a resistor on a factory-supplied module, but a resistor may be present on a replacement module and must be removed.

The R353 module has a terminal block with 7 connections available for wiring. The 2 right-hand terminals are for the 24 vac and common connections. The next 2 terminals are for the 0 to 10 vdc signal. Consult the wiring label for wire identification if replacing the module. The 3 left-hand terminals are not used for this application.

The S353 module has an LED (light-emitting diode), a set of 4 jumper pins, and 2 potentiometers. The LED will light whenever the module is activated, providing a visual indication of the number of exhaust fans running. The jumper pins are arranged in a square format. Two jumpers are used to determine the mode of operation (direct or reverse). The 2 jumpers must be arranged horizontally for direct action (factory set).

At the top of the module are 2 potentiometers. The left potentiometer adjusts the **offset**. The right potentiometer adjusts **differential**. The potentiometers are factory set for a nominal 0 in. wg building pressure.

The **offset** set point is defined as the point at which a module turns off a fan, and is measured in terms of percent of the input signal. For control purposes, 0 offset is at an arbitrary ‘‘floor’’ which is established at 10% of the input signal, or 1 vdc. In this example, the first stage will turn off at 30% (3 vdc), and the offset potentiometer will be set at 20%. The second stage will turn off at 50% signal (5 vdc), and the offset potentiometer will be set at 40%. The fourth stage is at the maximum 75% offset, which equates to 85% signal or 8.5 vdc. The offset potentiometer is calibrated in 10% increments.

Table 8 relates building pressure to signal level.

Table 8 — Potentiometer Signal Levels

BUILDING PRESSURE (in. wg)	SIGNAL LEVEL (vdc)
−0.50	2
−0.25	4
0.00	6
0.25	8
0.50	10

If the building pressure is controlled at 0 in. wg, offset of the first stage should be set at 50%, which equates to 60% of the input signal, or 6 vdc. The other stages can then be set as desired between 50% and 75%.

The default offset set points for modulating power exhaust are shown in Table 9.

Table 9 — Power Exhaust Default Set Points

STAGE	OFFSET	DIFFE-RENTIAL	OFF VOLTAGE	ON VOLTAGE	OFF STATIC PRESSURE (in. wg)
1	50%	3%	6.0	6.3	0.00
2	55%	3%	6.5	6.8	0.06
3	60%	3%	7.0	7.3	0.12
4	64%	3%	7.4	7.7	0.18

The **differential** set point is the difference between the turn off point and the turn on point for each module. It also is calibrated in terms of percent of input signal, and has a range of 1% to 7%. The differential potentiometer is calibrated in 1% increments, and is factory set at approximately 3%. It is recommended to leave the set point at 3%, to minimize cycling of the fans.

The offset and differential potentioments have been factory set for atmosphereic pressure. Do not change these settings until there is some experience with the building. In most cases the factory settings will be satisfactory. However, if the building pressure is not being maintained as desired, then some minor adjusting on a trial and error basis can be made.

Direct Digital Controls DIP Switch Configuration — The Direct Digital Control (DDC) board must be configured for each application. The DDC board is configured through the DIP switches located on the board. There are 8 DIP switches which configure 8 different applications of the DDC. See Tables 10A and 10B. DIP switch 1 is on the left of the block. DIP switch 8 is on the right of the block. To open a DIP switch, push the switch up with suitable tool (small-blade screwdriver). To close a DIP switch, push the switch down. Factory settings are shown in Tables 11A and 11B.

Table 10A — DIP Switch Configuration (Version 1.0 of Unit Control Software)

SETTING	1	2	3	4	5	6	7	8
OPEN	VAV	CCN/ Sensors	Expansion I/O Board	Field Test ON	Modulated Power Exhaust	Time Guard Override ON/ Set Min. Damper Pos. ON	Gas Heat	Factory Test ON
CLOSED	CV	TSTAT	Base Board Only	Field Test OFF	CV Power Exhaust	Time Guard Override OFF/ Set Min. Damper Pos. OFF	Electric Heat	Factory Test OFF

LEGEND

CCN — Carrier Comfort Network
CV — Constant Volume
I/O — Input/Output
POS. — Position
TSTAT — Thermostat
VAV — Variable Air Volume

NOTES:
1. The Factory Test DIP switch should not be enabled in the field.
2. The OPEN side of the DIP switch is marked "OPEN." When the rocker switch is on the "OPEN" side of the switch, the switch is open.
3. If DIP switch no. 1 is open, DIP switch no. 2 is ignored, since VAV units control to supply-air temperature.

Table 10B — DIP Switch Configuration (Version 2.0 of Unit Control Software)

SETTING	1	2	3	4	5	6	7	8
OPEN	VAV	VAV — Space Sensor Installed	Expansion Board	Field Test ON	VAV — Occupied Heat Enabled	Time Guard Override ON	Gas Heat	Heat Pump Operation
		CV — CCN or Sensors Used			CV — Modulated Power Exhaust	IN CONJUNCTION WITH FIELD TEST — Set Minimum Damper Position		
CLOSED	CV	VAV — No Space Sensor	Base Control Board Only	Field Test OFF	VAV — Occupied Heat Disabled	Time Guard Override OFF	Electric Heat	Air Conditioner Operation
		CV — Thermostat			CV — Constant Volume Power Exhaust			

LEGEND

CCN — Carrier Comfort Network
CV — Constant Volume
VAV — Variable Air Volume

NOTES:
1. The OPEN side of the DIP switch is marked "OPEN." When the rocker switch is on the "OPEN" side of the switch, the switch is OPEN.
2. The configuration of DIP switches 2 and 5 are dependent on DIP switch 1. If DIP switch 1 is set to OPEN (VAV operation), then DIP switches 2 and 5 will configure CV functions.
3. When the unit is field-tested (DIP switch 4 to OPEN), the function of DIP switch 6 changes and it is used to set the minimum damper position.

Table 11A — DIP Switch Factory Settings (Version 1.0 of Unit Control Software)

UNIT	1	2	3	4	5	6	7	8
50EJ/EW	Closed	Closed	Closed	Closed	Closed	Closed	Closed	Closed
50EK/EY	Open	Closed	Closed	Closed	Open	Closed	Closed	Closed

Table 11B — DIP Switch Factory Settings (Version 2.0 of Unit Control Software)

UNIT	1	2	3	4	5	6	7	8
50EJ/EW	Closed	Closed	Closed	Closed	Closed	Closed	Closed	Closed
50EK/EY	Open	Closed	Closed	Closed	Closed	Closed	Closed	Closed

DIP switch configurations for Version 1.0 of the Unit Control Software are as follows:

- DIP switch 1 configures the unit to operate as a variable air volume (VAV) or constant volume (CV) unit
- DIP switch 2 configures what type of sensors or thermostats are used with the unit
- DIP switch 3 configures the DDC for use with the electronic expansion board
- DIP switch 4 is used to field test the unit
- DIP switch 5 configures the unit to use constant volume or modulated power exhaust
- DIP switch 6 configures the Time Guard® override and the minimum damper position
- DIP switch 7 configures the unit for gas heat or electric heat
- DIP switch 8 is used to factory test the unit

The DIP switch configurations for Version 2.0 of the unit control software are as follows:

- DIP switch 1 configures the unit to operate as a VAV or CV unit
- DIP switch 2 configures the unit to use a space sensor (VAV units) or a thermostat (CV units)
- DIP switch 3 configures the DDC for use with an electronic expansion board
- DIP switch 4 is used to field test the unit
- DIP switch 5 is used to enable occupied heating (VAV units) or specify the type of power exhaust (CV units)
- DIP switch 6 configures the Time Guard override and, when used with the field test function, sets the minimum damper position
- DIP switch 7 configures the unit for gas heat or electric heat
- DIP switch 8 configures the unit for heat pump or air conditioner operation

Crankcase Heater(s) — Heater(s) is energized as long as there is power to the unit, except when the compressors are operating.

> IMPORTANT: Unit power must be on for 24 hours prior to start-up. Otherwise, damage to compressor may result.

Evaporator Fan — Fan belt and fixed pulleys are factory-installed. See Tables 12-14 for Fan Performance Data. See Table 15 for Air Quantity Limits. See Table 16 for Motor Limitation data. Be sure that fans rotate in the proper direction. Static pressure drop for power exhaust, barometric relief damper, and electric heat is negligible. To alter fan performance, see Evaporator Fan Performance Adjustment section on page 43.

Condenser Fans and Motors — Fans and motors are factory set. Refer to Condenser-Fan Adjustment section (page 44) as required.

Return-Air Filters — Check that correct filters are installed in filter tracks. See Table 1. Do not operate unit without return-air filters.

Filter Replacement — To replace filters, open filter access door (marked with label). Remove inner access panel. Remove plastic filter retainer in between filter tracks by sliding and pulling outward. Remove first filter by sliding it out of the opening in filter track. Locate filter removal tool, which is shipped next to the return air dampers. Use the filter removal tool to remove the remaining filters.

Outdoor-Air Inlet Screens — Outdoor-air inlet screens must be in place before operating unit.

Economizer Adjustment — Remove filter access panel. Check that outdoor-air damper is closed and return-air damper is open.

Economizer operation and adjustment is described in Sequence of Operation and Make Outdoor Air Inlet Adjustments sections (this page and page 25), respectively.

Sequence of Operation

NOTE: Unit is shipped with default values that can be changed through Service Tool or CCN software.

COOLING, CONSTANT VOLUME (CV) UNITS — On power up, the control module will activate the initialization software. The initialization software reads DIP switch no. 1 position to determine CV or VAV operation. Next, DIP switch no. 2 is read to determine if the control is TSTAT or sensor type operation. The initialization sequence: clears all alarms and alerts; re-maps the input/output database for CV operation; sets maximum heat stages to 2; and sets maximum cool stages to 3. The control module reads DIP switch no. 3 and determines if the unit will use expansion mode operation.

The TSTAT function performs a thermostat based control by monitoring Y1, Y2, W1, W2 and G inputs. These functions control stages: cool1, cool2, heat1, heat2, and the indoor fan respectively. If the TSTAT function is not selected, the control module determines the occupancy state based on the system time schedules or with remote occupied/unoccupied input. If Temperature Compensated Start is active, the unit will be controlled as in the Occupied mode. User defined set points are shown in Table 17.

Occupied or unoccupied comfort set points must be selected. Use of the space temperature offset input can also be configured. The control module will set appropriate operating mode and fan control. The control module will turn on indoor fan if in Occupied mode or if the unit is in Unoccupied mode and the space temperature is outside of the unoccupied comfort set points (Unoccupied Heat or Unoccupied Cool). The control module will then monitor space temperature against comfort set points and control heating or cooling stages as required. If the system is in the Occupied mode, the economizer will operate as required. If the system is in Unoccupied mode, the system will perform night time free cool and IAQ (indoor air quality) pre-occupancy purge as required (when functions are enabled via software). Whenever the DX (direct expansion) cooling is requested, the outdoor fan will operate.

Table 12 — Fan Performance, 50EJ/EK024-034 — Vertical Discharge Units

FOR EW/EY UNITS, REDUCE NET AVAILABLE EXTERNAL STATIC PRESSURE BY 0.3 IN. WG

AIRFLOW (Cfm)	AVAILABLE EXTERNAL STATIC PRESSURE (in. wg)															
	0.2		0.4		0.6		0.8		1.0		1.2		1.4		1.6	
	Rpm	Bhp	Rpm	Bhp	Rpm	Bhp	Rpm	Bhp	Rpm	Bhp	Rpm	Bhp	Rpm	Bhp	Rpm	Bhp
4,000	322	0.77	401	1.09	466	1.43	523	1.78	575	2.13	622	2.50	666	2.87	707	3.25
5,000	361	1.14	433	1.50	494	1.86	548	2.23	598	2.62	643	3.00	686	3.40	726	3.80
6,000	403	1.62	468	2.01	526	2.41	577	2.81	624	3.21	668	3.62	709	4.04	748	4.46
7,000	448	2.22	508	2.65	561	3.08	609	3.50	654	3.93	696	4.37	736	4.81	773	5.25
8,000	495	2.97	549	3.42	599	3.88	645	4.33	687	4.79	727	5.25	765	5.71	801	6.18
8,250	507	3.18	560	3.64	609	4.10	654	4.56	696	5.02	735	5.49	773	5.96	809	6.43
9,000	543	3.85	593	4.34	639	4.82	682	5.30	723	5.78	761	6.27	797	6.76	832	7.24
10,000	592	4.90	638	5.41	682	5.91	722	6.42	760	6.93	797	7.44	832	7.95	865	8.46
11,000	642	6.10	685	6.64	725	7.17	764	7.70	800	8.24	835	8.77	868	9.30	900	9.84
12,000	693	7.48	733	8.04	771	8.60	807	9.15	841	9.71	874	10.26	906	10.82	937	11.38
12,500	718	8.23	757	8.80	794	9.37	829	9.94	862	10.51	895	11.08	926	11.64	956	12.21
13,000	744	9.03	781	9.62	817	10.20	851	10.78	884	11.36	915	11.93	946	12.51	975	13.09
13,750	783	10.32	818	10.92	852	11.52	885	12.12	917	12.71	947	13.31	977	13.90	1005	14.50
14,000	795	10.77	831	11.38	864	11.98	896	12.59	928	13.19	958	13.79	987	14.39	1015	14.99
15,000	847	12.71	880	13.34	912	13.96	943	14.59	972	15.21	1001	15.83	1029	16.45	1056	17.08

AIRFLOW (Cfm)	AVAILABLE EXTERNAL STATIC PRESSURE (in. wg)															
	1.8		2.0		2.2		2.4		2.6		2.8		3.0		3.2	
	Rpm	Bhp	Rpm	Bhp	Rpm	Bhp	Rpm	Bhp	Rpm	Bhp	Rpm	Bhp	Rpm	Bhp	Rpm	Bhp
4,000	746	3.64	783	4.03	818	4.44	852	4.85	884	5.26	916	5.68	946	6.11	975	6.54
5,000	764	4.21	800	4.62	834	5.04	868	5.46	900	5.89	930	6.33	960	6.77	989	7.22
6,000	785	4.89	820	5.32	854	5.76	886	6.21	918	6.65	948	7.11	977	7.56	1006	8.02
7,000	809	5.70	843	6.16	876	6.61	908	7.08	939	7.54	968	8.01	997	8.49	1025	8.96
8,000	836	6.65	869	7.12	901	7.60	932	8.08	962	8.57	991	9.05	1019	9.55	1046	10.04
8,250	843	6.91	876	7.39	908	7.87	938	8.36	968	8.84	997	9.34	1025	9.83	1052	10.33
9,000	865	7.74	898	8.23	929	8.73	959	9.23	988	9.74	1016	10.24	1043	10.75	1070	11.27
10,000	897	8.98	928	9.49	958	10.01	987	10.53	1016	11.06	1043	11.58	1070	12.11	1096	12.64
11,000	931	10.37	961	10.91	990	11.45	1018	11.99	1046	12.54	1073	13.08	1099	13.63	1124	14.18
12,000	967	11.94	996	12.49	1024	13.06	1051	13.62	1078	14.18	1104	14.75	1129	15.31	1154	15.88
12,500	985	12.78	1014	13.35	1041	13.92	1068	14.49	1094	15.07	1120	15.64	1145	16.22	1169	16.80
13,000	1004	13.67	1032	14.25	1059	14.83	1086	15.42	1111	16.00	1137	16.59	1161	17.17	1185	17.76
13,750	1033	15.09	1060	15.69	1087	16.29	1112	16.88	1138	17.48	1162	18.08	1186	18.68	—	—
14,000	1043	15.59	1070	16.19	1096	16.79	1122	17.40	1147	18.00	1171	18.60	1195	19.21	—	—
15,000	1083	17.70	1109	18.32	1134	18.94	1159	19.56	1183	20.19	—	—	—	—	—	—

AIRFLOW (Cfm)	AVAILABLE EXTERNAL STATIC PRESSURE (in. wg)					
	3.4		3.6		3.8	
	Rpm	Bhp	Rpm	Bhp	Rpm	Bhp
4,000	1004	6.97	1032	7.41	1059	7.86
5,000	1017	7.67	1045	8.12	1072	8.58
6,000	1034	8.49	1061	8.96	1087	9.43
7,000	1052	9.44	1079	9.93	1105	10.42
8,000	1073	10.54	1099	11.04	1125	11.55
8,250	1079	10.84	1105	11.34	1130	11.85
9,000	1096	11.78	1122	12.30	1147	12.82
10,000	1122	13.18	1147	13.71	1171	14.25
11,000	1149	14.73	1173	15.29	1197	15.84
12,000	1178	16.45	1202	17.03	—	—
12,500	1193	17.38	—	—	—	—
13,000	—	—	—	—	—	—
13,750	—	—	—	—	—	—
14,000	—	—	—	—	—	—
15,000	—	—	—	—	—	—

LEGEND

Bhp — Brake Horsepower

NOTES:
1. Fan performance is based on wet coils, economizer, roof curb, cabinet losses, and clean 2-in. filters.
2. Conversion — Bhp to watts:

$$\text{Watts} = \frac{\text{Bhp x 746}}{\text{Motor efficiency}}$$

3. VAV units will operate down to 70 cfm/ton.

Table 13 — Fan Performance, 50EJ038,044 and 50EK044 — Vertical Discharge Units

For EW/EY UNITS, REDUCE NET AVAILABLE EXTERNAL STATIC PRESSURE BY 0.5 IN. WG

AIRFLOW (Cfm)	AVAILABLE EXTERNAL STATIC PRESSURE (in. wg)															
	0.2		0.4		0.6		0.8		1.0		1.2		1.4		1.6	
	Rpm	Bhp	Rpm	Bhp	Rpm	Bhp	Rpm	Bhp	Rpm	Bhp	Rpm	Bhp	Rpm	Bhp	Rpm	Bhp
8,000	448	2.18	498	2.87	544	3.25	589	3.64	631	4.04	671	4.44	710	4.86	747	5.27
9,000	492	2.87	537	3.68	580	4.09	621	4.50	660	4.92	698	5.35	734	5.78	769	6.22
10,000	537	3.69	578	4.63	617	5.07	655	5.50	692	5.95	727	6.39	761	6.85	795	7.30
11,000	582	4.65	620	5.75	657	6.20	692	6.66	726	7.13	759	7.60	792	8.07	823	8.55
12,000	629	5.75	664	7.02	698	7.50	730	7.98	763	8.47	794	8.96	824	9.45	854	9.95
13,000	675	7.00	708	8.48	739	8.98	770	9.48	800	9.99	830	10.50	859	11.01	887	11.53
14,000	722	8.42	753	10.11	782	10.63	811	11.16	840	11.69	868	12.22	895	12.75	922	13.29
15,000	770	10.00	798	11.94	826	12.48	853	13.03	880	13.57	907	14.13	932	14.68	958	15.24
16,000	817	11.76	844	13.96	870	14.53	896	15.09	922	15.66	947	16.23	971	16.81	995	17.38
17,000	865	13.70	890	16.19	915	16.78	940	17.37	964	17.95	988	18.54	1011	19.14	1034	19.73
18,000	913	15.83	937	18.64	961	19.25	984	19.85	1007	20.46	1030	21.07	1052	21.68	1074	22.30
19,000	961	18.16	984	21.32	1006	21.94	1029	22.56	1050	23.19	1072	23.82	1093	24.45	1115	25.08
20,000	1009	20.69	1031	24.22	1052	24.86	1074	25.50	1095	26.15	1115	26.80	1136	27.45	1156	28.10

AIRFLOW (Cfm)	AVAILABLE EXTERNAL STATIC PRESSURE (in. wg)															
	1.8		2.0		2.2		2.4		2.6		2.8		3.0		3.2	
	Rpm	Bhp	Rpm	Bhp	Rpm	Bhp	Rpm	Bhp	Rpm	Bhp	Rpm	Bhp	Rpm	Bhp	Rpm	Bhp
8,000	783	5.70	818	6.13	852	6.56	884	7.00	916	7.45	947	7.90	978	8.36	1007	8.82
9,000	803	6.66	836	7.11	869	7.56	900	8.02	930	8.48	960	8.95	989	9.42	1018	9.90
10,000	827	7.77	858	8.23	889	8.70	919	9.18	948	9.66	977	10.15	1005	10.64	1032	11.13
11,000	854	9.03	884	9.51	913	10.00	941	10.50	969	11.00	997	11.50	1024	12.01	1050	12.52
12,000	883	10.45	911	10.96	939	11.47	967	11.98	993	12.50	1020	13.02	1046	13.54	1071	14.07
13,000	914	12.05	942	12.57	968	13.10	994	13.63	1020	14.17	1045	14.71	1070	15.25	1094	15.79
14,000	948	13.83	974	14.37	999	14.92	1024	15.47	1049	16.02	1073	16.58	1096	17.14	1120	17.70
15,000	983	15.80	1007	16.36	1032	16.92	1056	17.49	1079	18.06	1102	18.64	1125	19.21	1148	19.79
16,000	1019	17.96	1043	18.54	1066	19.13	1089	19.71	1111	20.30	1134	20.89	1156	21.49	1177	22.08
17,000	1057	20.33	1079	20.93	1102	21.53	1124	22.14	1145	22.75	1167	23.35	1188	23.97	—	—
18,000	1096	22.91	1117	23.53	1138	24.15	1160	24.78	1180	25.40	—	—	—	—	—	—
19,000	1135	25.72	1156	26.36	1176	26.99	1197	27.63	—	—	—	—	—	—	—	—
20,000	1176	28.75	1196	29.41	—	—	—	—	—	—	—	—	—	—	—	—

AIRFLOW (Cfm)	AVAILABLE EXTERNAL STATIC PRESSURE (in. wg)					
	3.4		3.6		3.8	
	Rpm	Bhp	Rpm	Bhp	Rpm	Bhp
8,000	1036	9.29	1065	9.76	1092	10.24
9,000	1046	10.38	1073	10.87	1100	11.36
10,000	1059	11.63	1086	12.13	1112	12.64
11,000	1076	13.03	1102	13.55	1127	14.07
12,000	1096	14.60	1121	15.13	1145	15.67
13,000	1118	16.34	1142	16.89	1165	17.45
14,000	1143	18.26	1166	18.83	1188	19.40
15,000	1170	20.37	1192	20.96	—	—
16,000	1199	22.68	—	—	—	—
17,000	—	—	—	—	—	—
18,000	—	—	—	—	—	—
19,000	—	—	—	—	—	—
20,000	—	—	—	—	—	—

LEGEND

Bhp — Brake Horsepower

NOTES:
1. Fan performance is based on wet coils, economizer, roof curb, cabinet losses, and clean 2-in. filters.
2. Conversion − Bhp to watts:

$$\text{Watts} = \frac{\text{Bhp x 746}}{\text{Motor efficiency}}$$

3. VAV units will operate down to 70 cfm/ton.

Table 14 — Fan Performance, 50EJ048 — Vertical Discharge Units

FOR EW UNITS, REDUCE NET AVAILABLE EXTERNAL STATIC PRESSURE BY 0.5 IN. WG

AIRFLOW (Cfm)	AVAILABLE EXTERNAL STATIC PRESSURE (in. wg)															
	0.2		0.4		0.6		0.8		1.0		1.2		1.4		1.6	
	Rpm	Bhp	Rpm	Bhp	Rpm	Bhp	Rpm	Bhp	Rpm	Bhp	Rpm	Bhp	Rpm	Bhp	Rpm	Bhp
13,000	683	7.10	715	8.59	747	9.09	777	9.60	808	10.11	837	10.62	866	11.14	894	11.66
14,000	730	8.53	761	10.25	790	10.77	819	11.30	847	11.83	875	12.36	902	12.90	929	13.44
15,000	778	10.14	807	12.10	834	12.65	862	13.19	888	13.75	915	14.30	941	14.86	966	15.42
16,000	826	11.93	853	14.15	879	14.72	905	15.29	931	15.86	955	16.44	980	17.01	1004	17.59
17,000	875	13.90	900	16.42	925	17.01	949	17.60	973	18.19	997	18.78	1020	19.38	1043	19.98
18,000	923	16.06	947	18.90	971	19.51	994	20.12	1017	20.73	1039	21.34	1062	21.96	1084	22.58
19,000	972	18.42	995	21.61	1017	22.24	1039	22.87	1061	23.50	1083	24.13	1104	24.76	1125	25.40
20,000	1021	20.98	1042	24.55	1064	25.20	1085	25.85	1106	26.50	1126	27.15	1147	27.80	1167	28.46

AIRFLOW (Cfm)	AVAILABLE EXTERNAL STATIC PRESSURE (in. wg)															
	1.8		2.0		2.2		2.4		2.6		2.8		3.0		3.2	
	Rpm	Bhp	Rpm	Bhp	Rpm	Bhp	Rpm	Bhp	Rpm	Bhp	Rpm	Bhp	Rpm	Bhp	Rpm	Bhp
13,000	921	12.18	948	12.71	975	13.24	1001	13.77	1026	14.30	1051	14.84	1076	15.39	1100	15.93
14,000	955	13.98	981	14.53	1006	15.08	1031	15.63	1056	16.18	1080	16.74	1103	17.30	1127	17.86
15,000	991	15.98	1015	16.54	1040	17.11	1063	17.68	1087	18.25	1110	18.83	1133	19.41	1155	19.99
16,000	1028	18.17	1051	18.76	1074	19.34	1097	19.93	1120	20.52	1142	21.12	1164	21.71	1185	22.31
17,000	1066	20.58	1089	21.18	1111	21.78	1133	22.39	1154	23.00	1175	23.61	1197	24.23	—	—
18,000	1106	23.19	1127	23.82	1148	24.44	1169	25.07	1190	25.69	—	—	—	—	—	—
19,000	1146	26.04	1166	26.68	1187	27.32	—	—	—	—	—	—	—	—	—	—
20,000	1187	29.11	—	—	—	—	—	—	—	—	—	—	—	—	—	—

AIRFLOW (Cfm)	AVAILABLE EXTERNAL STATIC PRESSURE (in. wg)					
	3.4		3.6		3.6	
	Rpm	Bhp	Rpm	Bhp	Rpm	Bhp
13,000	1124	16.48	1148	17.03	1171	17.59
14,000	1150	18.43	1173	19.00	1195	19.57
15,000	1177	20.57	1199	21.16	—	—
16,000	—	—	—	—	—	—
17,000	—	—	—	—	—	—
18,000	—	—	—	—	—	—
19,000	—	—	—	—	—	—
20,000	—	—	—	—	—	—

LEGEND

Bhp — Brake Horsepower

NOTES:
1. Fan performance is based on wet coils, economizer, roof curb, cabinet losses, and clean 2-in. filters.
2. Conversion − Bhp to watts:

$$\text{Watts} = \frac{\text{Bhp x 746}}{\text{Motor efficiency}}$$

3. VAV units will operate down to 70 cfm/ton.

Table 15 — Air Quantity Limits

UNIT 50EJ,EK,EW,EY	MINIMUM HEATING CFM	MINIMUM COOLING CFM (VAV)	MINIMUM COOLING CFM (CV)	MAXIMUM CFM
024	6,000	2000	6,000	10,000
028	7,500	2500	7,500	12,500
030	8,250	2750	8,250	13,750
034	9,000	3000	9,000	15,000
038	10,500	3500	10,500	17,500
044	12,000	4000	12,000	20,000
048	13,500	4500	13,500	22,500

LEGEND

CV — Constant Volume
VAV — Variable Air Volume

Table 16 — Motor Limitations

STANDARD EFFICIENCY MOTORS

Nominal Hp	Maximum Bhp	Maximum Amps				Maximum Watts	Motor Efficiency
		208	230	460	575		
5	5.9	17.94	16.99	—	—	5,348	82.3
	5.9	—	—	8.50	5.78	5,240	84.0
7.5	8.7	25.52	24.36	—	—	7,717	84.1
	9.5	—	—	13.30	9.63	8,549	82.9
10	10.2	26.93	25.50	—	—	8,879	85.7
	11.8	—	—	14.75	11.33	10,284	85.6
15	15.3	42.84	40.80	—	—	13,686	83.4
	18.0	—	—	24.00	18.00	15,891	84.5
20	22.4	59.36	56.00	—	—	19,032	87.8
	23.4	—	—	29.25	22.82	19,950	87.5
25	28.9	76.30	72.83	—	—	24,499	88.0
	29.4	—	—	37.04	28.69	25,181	87.1
30	35.6	92.56	87.81	—	—	29,378	90.4
	34.7	—	—	42.80	n/a	29,316	88.3

HIGH EFFICIENCY MOTORS

Nominal Hp	Maximum Bhp	Maximum Amps				Maximum Watts	Motor Efficiency
		208	230	460	575		
5	5.9	16.76	13.92	—	—	5,030	87.5
	5.9	—	—	6.96	—	5,030	87.5
	5.9	—	—	—	5.66	4,918	89.5
7.5	8.7	26.10	22.27	—	—	7,334	88.5
	9.5	—	—	12.16	—	8,008	88.5
	9.5	—	—	—	9.50	7,728	91.7
10	10.2	28.56	24.89	—	—	8,502	89.5
	11.8	—	—	14.40	—	9,836	89.5
	11.8	—	—	—	11.68	9,600	91.0
15	15.3	45.08	39.17	—	—	12,543	91.0
	18.0	—	—	23.04	—	14,756	91.0
	18.0	—	—	—	18.12	14,439	93.0
20	22.4	63.84	55.55	—	—	18,363	91.0
	23.4	—	—	29.02	—	19,183	91.0
	23.4	—	—	—	23.17	18,650	93.6
25	28.9	80.69	70.05	—	—	23,511	91.7
	29.4	—	—	35.63	—	23,918	91.7
	29.4	—	—	—	28.81	23,432	93.6
30	35.6	102.65	89.00	—	—	28,742	92.4
	34.7	—	—	43.38	—	28,015	92.4
	34.7	—	—	—	33.89	27,656	93.6

LEGEND

BHP — Brake Horsepower

NOTE: Extensive motor and electrical testing on the Carrier units has ensured that the full horsepower range of the motor can be utilized with confidence. Using your fan motors up to the horsepower ratings shown on the Motor Limitations table will not result in nuisance tripping or premature motor failure. Unit warranty will not be affected.

Table 17 — User Defined Set Points

SET POINT	FORMAT	DESCRIPTION	LIMITS	DEFAULT
OHSP	xx.xF	Occupied Heat Set Point	55 to 80 F	68
OCSP	xx.xF	Occupied Cool Set Point	55 to 80 F	78
UHSP	xx.xF	Unoccupied Heat Set Point	40 to 80 F	55
UCSP	xx.xF	Unoccupied Cool Set Point	75 to 95 F	90
SASP	xx.xF	Supply Air Set Point	45 to 70 F	55
OATL	xx.xF	Hi OAT Lockout Temperature	55 to 75 F	65
NTLO	xx.xF	Unoccupied OAT Lockout Temperature	40 to 70 F	50
RTIO	xx.x	Reset Ratio	0 to 10	3
LIMT	xx.x^F	Reset Limit	0 to 20 F	10
MDP	xxx%	Minimum Damper Position	0 to 100%	20
IAQS	xxxx	IAQ Set Point	1 to 5000	650
UHDB	xx.x^F	Unoccupied Heating Deadband	0 to 10	1
UCDB	xx.x^F	Unoccupied Cooling Deadband	0 to 10	1
LTMP	xx.xF	Low Temp. Min. Position	0 to 100	10
HTMP	xx.xF	High Temp. Min. Position	0 to 100	35
PES1	xx.xF	CV Power Exhaust Stage 1 Point	0 to 100	25
PES2	xx.xF	CV Power Exhaust Stage 2 Point	0 to 100	75

LEGEND

CV — Constant Volume
IAQ — Indoor Air Quality
OAT — Outdoor Air Temperature

The control module will operate economizer, run diagnostics to monitor alarms/alerts at all times, and respond to CCN communications to perform any configured network POC (product outboard control) functions such as time/outdoor-air temperature broadcast and global occupancy broadcast. When the optional expansion I/O board is employed, it will: perform a periodic scan and maintain a database of expanded I/O points; perform Fire/Smoke control (power exhaust required); if in Occupied mode, perform IAQ control and monitor the fan, filter, demand limit, and field-applied status (with accessories).

If thermostats are used to energize the G input, the control module will turn on the indoor fan without delay and open the economizer dampers to minimum position. If thermostats are used to deenergize the G input, the control module will turn off the indoor fan without delay and close the economizer dampers.

When cooling, G must be energized before cooling can operate. The control module determines if outdoor conditions are suitable for economizer cooling using the standard outdoor air thermistor. For the economizer to function for outside air cooling: the enthalpy must be below the enthalpy set point; the outdoor-air temperature must be equal to or less than the High Outdoor Air Temperature Lockout (default is 65 F); the SAT (supply-air temperature) thermistor must not be in alarm; and the outdoor air reading is available. When these conditions are satisfied, the control module will use economizer as the first stage of cooling.

When Y1 input is energized, the economizer will be modulated to maintain SAT at the defined set point. (The default is 55 F.) When SAT is above the set point, the economizer will be 100% open. When SAT is below the set point, the economizer will modulate between minimum and 100% open position. When Y2 is energized, the control module will turn on compressor 1 and continue to modulate the economizer as described above. If the Y2 remains energized and the SAT reading remains above the set point for 15 minutes, compressor 2 will turn on. If Y2 is deenergized at any time, only the last stage of compression that was energized will be turned off. If outdoor conditions are not suitable for economizer cooling, the economizer will go to minimum position and cycle compressors 1 and 2 based on demand from Y1 and Y2 respectively. The compressors will be locked out when the SAT temperature is too low (less than 40 F for compressor 1 and less than 45 F for compressor 2). After a compressor is locked out, it can restart after normal time-guard period.

The Time Guard® function maintains a minimum off time of 5 minutes, a minimum on time of 10 seconds, and a minimum delay before starting the second compressor of 10 seconds.

When heating, the heat stages respond to the demand from W1 and W2 of the thermostat input. Heating and cooling will be mutually locked-out on demand on a first call basis. The heating and the cooling functions cannot operate simultaneously.

COOLING, VARIABLE VOLUME UNITS — On power up, the control module will activate the initialization software. The initialization software reads DIP switch no. 1 position to determine CV or VAV operation. The initialization sequence: clears all alarms and alerts; re-maps the input/output database for VAV operation; sets maximum heat stages to 1; and sets maximum cool stages to 6. The control module reads DIP switch no. 3 and determines if the unit will use expansion mode operation. Power up takes a random time of 1 to 63 seconds plus 5 minutes the first time power is sent to the control board after a power outage.

The control module will determine if an interface (linkage) is active and if the unit will operate in a Digital Air Volume (DAV) mode. In a DAV system, the room terminals are equipped with microprocessor controls that give commands to the base unit module. If a linkage is active, the control module will replace local comfort set points, space and return air temperatures, and occupancy status with the linkage data supplied.

The control module will determine occupancy status from Time Schedules (if programmed), Remote Occupied/Unoccupied input, global occupancy schedules, or DAV. If temperature compensated start is active, the unit will be controlled as in the Occupied mode.

NOTE: The temperature compensated start is a period of time calculated to bring the unit on while in Unoccupied mode to reach the occupied set point when occupancy occurs.

The control module will set the appropriate operating mode and fan control. The control module will turn on the VFD if Occupied mode is evident. If in Unoccupied mode and a valid space temperature reading is available (either from a sensor or DAV), the control module will monitor SPT (space temperature) against unoccupied heat and cool set points. The control module will start the VFD whenever SPT is outside of the set points (Unoccupied Heat or Unoccupied Cool). The VFD may also be started by nighttime thermostat via remote Occupied/Unoccupied input or by a temperature compensated start algorithm. When the VFD is running in a normal mode, the control module will start heating or cooling as required to maintain supply-air temperature at the supply air set point plus the reset (when enabled). The reset value is determined by SAT (supply-air temperature) reset and/or space temperature reset algorithms. The reset is only available when enabled through software.

When cooling, the control module will energize the power exhaust enable output to the external power exhaust controller (when power exhaust is used).

The control module will run continuous diagnostics for alarms/alerts; respond to CCN (Carrier Comfort Network) communications; perform any configured network POC (Product Outboard Control) functions such as time/outdoor air temperature broadcast and global broadcast; and perform Fire/Smoke control.

HEATING, CONSTANT VOLUME (CV) UNITS — The control module is powered by 24 vac. If the unit is controlled with a room sensor, the fan will run continuously in the Occupied mode, with the outside-air damper in the minimum position. If the unit is controlled through a room thermostat (with FAN set to AUTO), upon a call for heat the first stage of heat is energized, the indoor-fan motor will turn on, and the outdoor-air damper will move to the minimum position. Upon a call for additional heat (if the unit is equipped with a two-stage heater), the second stage of heat is energized. When the call for heat is satisfied, the heaters will deenergize. The indoor-fan motor will also deenergize (unless controlled by a room sensor) and the outdoor-air damper will move to the closed position.

If the unit is controlled with a room sensor the fan will not run in the unoccupied mode. Upon a call for heat, the first stage of heat is energized, the indoor-fan motor will turn on, and the outdoor air damper will move to the Unoccupied IAQ position (generally set to zero in the unoccupied mode). The IAQ feature is enabled through system software. Upon a call for additional heat (if the unit is equipped with a two-stage heater), the second stage of heat is energized. When the call for heat is satisfied, the heaters and indoor-fan motor will deenergize and the outdoor-air damper will move to the closed position (if open).

HEATING, VARIABLE AIR VOLUME (VAV) UNITS — The control board is powered by 24 vac. When there is a call for heating (from Morning Warm-Up, Unoccupied, or Occupied modes), power is sent from the control module to energize the first stage of electric heat. A field-supplied heat

interlock relay signals for the air terminals to fully open. See Fig. 35. In the Occupied mode, the indoor-fan motor will operate continuously and the outdoor-air dampers will be in the minimum position. In the Unoccupied mode, the indoor-fan motor will be off, but will energize upon the call for heat. The outdoor-air dampers will move to the IAQ unoccupied position (generally set to zero in the Unoccupied mode). The IAQ feature is enabled through system software. The duct pressure sensor will signal to the variable frequency drive to operate at full speed. Upon a call for additional heat (if the unit is equipped with a two-stage heater), the second stage of heat will be energized. When the call for heat is satisfied, the heaters will deenergize.

NOTE: The HIR is not needed in a DAV system.

If the unit is in the Unoccupied mode, the indoor-fan motor will deenergize and the outdoor-air damper will move to the closed position (if open).

MORNING WARM-UP (VAV ONLY WITH PC ACCESSED/ CCN OPERATION) — Morning warm-up occurs when the control module has been programmed to turn on heat, prior to the Occupied mode, to be ready for the occupancy. Morning warm-up is a condition in VAV systems that occurs when the Temperature Compensated Start algorithm calculates a biased occupied start time and the unit has a demand for heating. The warm-up will continue into the occupied period as long as there is a need for heat. During warm-up, the unit can continue heating into the occupied period, even if occupied heating is disabled. When the heating demand is satisfied, the warm-up condition will terminate. To increase or decrease the heating demand, use the network access software to change the occupied heating set point.

NOTE: To utilize morning warm-up mode, the unit occupancy schedule must be accessed via Service Tool, Comfort Works, or Building Supervisor software (units running Version 1.0 of unit control software).

MORNING WARM-UP (VAV ONLY WITH STAND-ALONE OPERATION) — When a unit running version 2.0 of the unit control software operates in stand-alone mode, morning warm-up occurs when the unit is energized in Occupied mode and return-air temperature (RAT) is below 68 F. Warm-up will not terminate until the RAT reaches 68 F. The heat interlock relay output is energized during morning warm-up. (A field-installed 24-vdc heat interlock relay is required.) The output will be energized until the morning warm-up cycle is complete. Refer to Fig. 35 for heat interlock relay wiring.

SPACE TEMPERATURE RESET (VAV ONLY) — An accessory space temperature sensor is required. Space temperature reset is used to reset the supply-air temperature set point of a VAV system higher, as the space temperature falls below the Occupied Cool set point. As the space temperature falls below the cool set point, the supply-air temperature will be reset upward as a function of the reset ratio. Reset ratio is expressed in degrees change in supply-air temperature per degree of space temperature change. A reset limit will exist which will limit the maximum number of degrees the supply-air temperature may be raised. Both the reset ratio and the reset limit are user definable. The sequence of operation is as follows:

1. The on/off status of the unit supply fan is determined.
2. If the fan is on, the sequence will check if the system is in Occupied mode.
3. If the system is in Occupied mode, the sequence will determine if the reset option is enabled.
4. If the reset option is enabled, the sequence will read the space temperature and compare it to the Occupied Cool set point. If the temperature is below the Occupied Cool set point, the algorithm will compute the reset value and compare this value against the reset limit. If it is greater than the reset limit, the sequence will use the reset limit as the reset value.

The field-supplied space temperature sensor input signal (4 to 20 ma and 2 to 10 vdc) enables the space temperature reset function. Refer to Fig. 36 for sensor wiring.

POWER EXHAUST OPERATION — The optional power exhaust packages are factory- or field-installed with vertical units and optionally installed in the return air ductwork for horizontal applications. The standard (only offered with constant volume units) and modulating power exhaust (offered on VAV units) are the 2 packages available. The modulating power exhaust package is equipped with a field-adjustable static pressure controller which will control up to 4 power exhaust stages to maintain a building static pressure. The blue sequencer located in the control box below the control board can be adjusted by removing the covers and adjusting the set point dial to the desired building pressure. The standard power exhaust package controls up to 2 stages of power exhaust to maintain building pressure. These power exhaust stages are staged according to a percentage of the economizer damper position. The default values are 25% for Stage 1 and 75% for Stage 2. This package has set points that are adjustable through software (such as Service Tool, Building Supervisor, or Comfort Works).

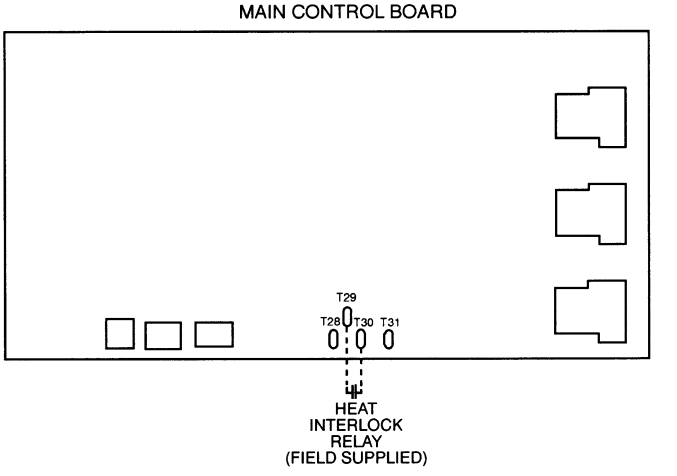

Fig. 35 — Heat Interlock Relay Wiring

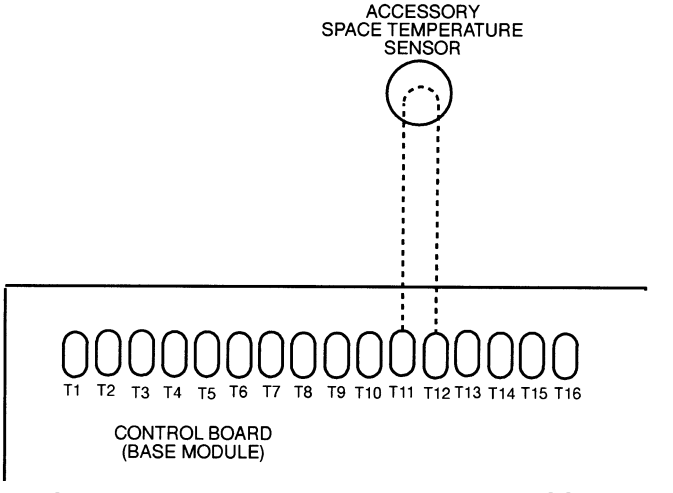

Fig. 36 — Space Temperature Sensor Wiring

CAPACITY CONTROL, COOLING — The cooling capacity staging tables are shown in Tables 18 and 19.

Table 18 — Cooling Capacity Staging Table CV Units with 2 Compressors

STAGES	0	1 ECONOMIZER	2	3
Compressor 1	Off	Off	On	On
Compressor 2	Off	Off	Off	On

NOTE: On CV units that require additional unloading, add suction pressure unloaders on Compressor 1 only.

Table 19 — Cooling Capacity Staging Table VAV Units with 2 Compressors and 2 Unloaders*

STAGES	0	1	2	3	4	5	6
Compressor 1	Off	On	On	On	On	On	On
Unloader 1	Off	On	On	Off	On	On	Off
Unloader 2	Off	On	Off	Off	On	Off	Off
Compressor 2	Off	Off	Off	Off	On	On	On

*40 ton units have only 1 unloader.

FIELD TEST — The field test program is initiated by moving up DIP switch no. 4 to the OPEN position. The outdoor-air damper will close. The control allows 90 seconds for the damper to close in case it was in the full open position. Next, the indoor-fan contactor will be energized, and the outside-air damper will begin to open to its default value of 20% and stay at that position for a short period of time. The outdoor-air damper will then open to its full open position and stay at that position for a short period of time. The outdoor-air damper will then close.

If the unit is equipped with power exhaust, stage 1 will be energized for 5 seconds. If the unit is configured for stage 2 of power exhaust, stage 2 will be energized for 5 seconds after the first stage is deenergized.

The first stage of heat will be energized for 30 seconds, after which the second stage heat will be energized for an additional 30 seconds. Heat is then deenergized.

The last step is the Cooling mode. Outdoor-fan contactor no. 1 is energized. This is followed by each stage of cooling energized with a 10-second delay between stages. After this is complete, outdoor-fan contactor no. 2 is energized for 10 seconds.

The compressors will now deenergize, followed by the outdoor-fan contactors and indoor-fan contactors.

The field test is then complete.

TIME GUARD® CIRCUIT — The Time Guard function (built into the rooftop's control module board) maintains a minimum off time of 5 minutes and a minimum on time of 10 seconds.

CRANKCASE HEATER — The unit main power supply must remain on to provide crankcase heater operation. The crankcase heater in each compressor keeps oil free of refrigerant while compressor is off.

HEAD PRESSURE CONTROL — Each unit has a fan cycling, outdoor thermostat to shut off outdoor-fan motor(s) at 55 F (one outdoor-fan motor on 024-034 units and 2 outdoor-fan motors on 038-048 units). The head pressure control permits the unit to operate with correct condensing temperatures down to 35 F outdoor-air temperature.

MOTORMASTER® III DEVICE — The Motormaster III Solid-State Head Pressure Control is a field-installed accessory, fan speed control device actuated by a temperature sensor. The Motormaster III device is specifically designed for use on Carrier equipment and controls the outdoor-fan motor speed in response to the saturated condensing temperature. For outdoor temperatures down to −20 F, the Motormaster III device maintains condensing temperature at 100 F.

SERVICE

⚠ WARNING

Before performing service or maintenance operations on unit, turn off main power switch to unit. Turn off accessory heater power switch if applicable. Electrical shock could cause personal injury.

Service Access — All unit components can be reached through clearly labelled hinged access doors. These doors are not equipped with tiebacks, so if heavy duty servicing is needed, either remove them or prop them open to prevent accidental closure.

Each door is held closed with 3 latches. The latches are secured to the unit with a single ¼-in. - 20 x ½-in. long bolt. See Fig. 37.

To open, loosen the latch bolt using a 7⁄16-in. wrench. Pivot the latch so it is not in contact with the door. Open the door. To shut, reverse the above procedure.

NOTE: Disassembly of the top cover may be required under special service circumstances. It is very important that the orientation and position of the top cover be marked on the unit prior to disassembly. This will allow proper replacement of the top cover onto the unit and prevent rainwater from leaking into the unit.

IMPORTANT: After servicing is completed, make sure door is closed and relatched properly, and that the latches are tight. Failure to do so can result in water leakage into the evaporator section of the unit.

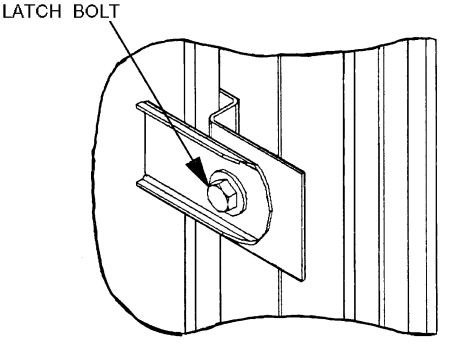

Fig. 37 — Door Latch

Cleaning — Inspect unit interior at beginning of each heating and cooling season and as operating conditions require. Remove unit top panel and/or side panels for access to unit interior.

EVAPORATOR COIL — Clean as required with a commercial coil cleaner.

CONDENSER COIL — Clean condenser coil annually and as required by location and outdoor-air conditions. Inspect coil monthly — clean as required.

CONDENSATE DRAIN — Check and clean each year at start of cooling season. In winter, keep drains and traps dry.

FILTERS — Clean or replace at start of each heating and cooling season, or more often if operating conditions require. Refer to Table 1 for type and size.

NOTE: The unit requires industrial grade throwaway filters capable of withstanding face velocities up to 625 fpm.

OUTDOOR-AIR INLET SCREENS — Clean screens with steam or hot water and a mild detergent. Do not use throwaway filters in place of screens.

Lubrication

COMPRESSORS — Each compressor is charged with the correct amount of oil at the factory. The correct oil charge is shown in Table 1. If oil is visible in the compressor sight glass, check unit for operating readiness as described in Start-Up section, then start the unit. Observe oil level and add oil, if required, to bring oil level in compressor crankcase up to between ¼ and ⅓ of sight glass during steady operation.

If oil charge is above ⅓ sight glass, do not remove any oil until the compressor crankcase heater has been energized for at least 24 hours with compressor off.

When additional oil or a complete charge is required, use only Carrier-approved compressor oil:

Petroleum Specialties, Inc. . . . . Cryol 150

Texaco, Inc. . . . . Capella WF-32

Witco Chemical Corp. . . . . Suniso 3GS

> IMPORTANT: Do not use reclaimed oil or oil that has been exposed to the atmosphere. Refer to Carrier Standard Service Techniques Manual, Chapter 1, Refrigerants section, for procedures to add or remove oil.

FAN SHAFT BEARINGS — Lubricate the bearings at least twice annually with suitable bearing grease. Do not over grease. Typical lubricants are show below:

MANUFACTURER	LUBRICANT
Texaco	Regal AFB-2*
Mobil	Mobilplex EP No. 1
Sunoco	Prestige 42
Texaco	Multifak 2

*Preferred lubricant because it contains rust and oxidation inhibitors.

CONDENSER AND EVAPORATOR-FAN MOTOR BEARINGS — The condenser and evaporator-fan motors have permanently-sealed bearings, so no field lubrication is necessary.

Evaporator Fan Performance Adjustment (Fig. 38) — Fan motor pulleys are factory set for speed shown in Table 1 (factory speed setting).

To change fan speeds, change pulleys.

To align fan and motor pulleys:

1. Shut off unit power supply.
2. Loosen fan shaft pulley bushing.
3. Slide fan pulley along fan shaft.
4. Make angular alignment by loosening motor from mounting plate.
5. Retighten pulley.

> IMPORTANT: Check to ensure that the unit drive matches the duct static pressure in Tables 12 to 14.

Evaporator Fan Service and Replacement

1. Turn off unit power.
2. Remove supply-air section panels.
3. Remove belt and blower pulley.
4. Loosen set screws in blower wheels.
5. Remove locking collars from bearings.
6. Remove shaft.
7. Remove venturi on opposite side of bearing.
8. Lift out wheel.
9. Reverse above procedure to reinstall fan.
10. Check and adjust belt tension as necessary.

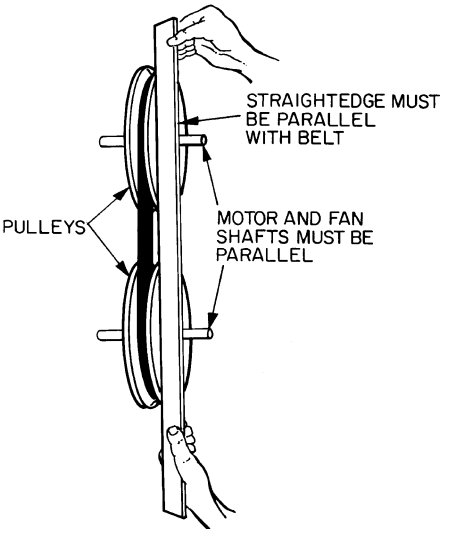

Fig. 38 — Evaporator-Fan Pulley Alignment and Adjustment

Belt Tension Adjustment — To adjust belt tension:

1. Remove power to unit.
2. Remove motor mount nuts and bolts.
3. Loosen fan motor nuts. See Fig. 39.
4. Turn motor jacking bolts to move motor mounting plate left or right for proper belt tension. A slight bow should be present in the belt on the slack side of the drive while running under full load.
5. Tighten nuts.
6. Adjust bolts and nut on mounting plate to secure motor in fixed position. Recheck belt tension after 24 hours of operation. Adjust as necessary.

Condenser-Fan Adjustment

1. Shut off unit power supply.
2. Remove fan guard.
3. Loosen fan hub setscrews.
4. Adjust fan height on shaft using a straightedge placed across venturi and measure per Fig. 40.
5. Tighten setscrews and replace fan guard.
6. Turn on unit power.

Evaporator-Fan Motor Replacement

1. Shut off unit power supply.
2. Remove upper outside panel and open hinged door to gain access to motor.

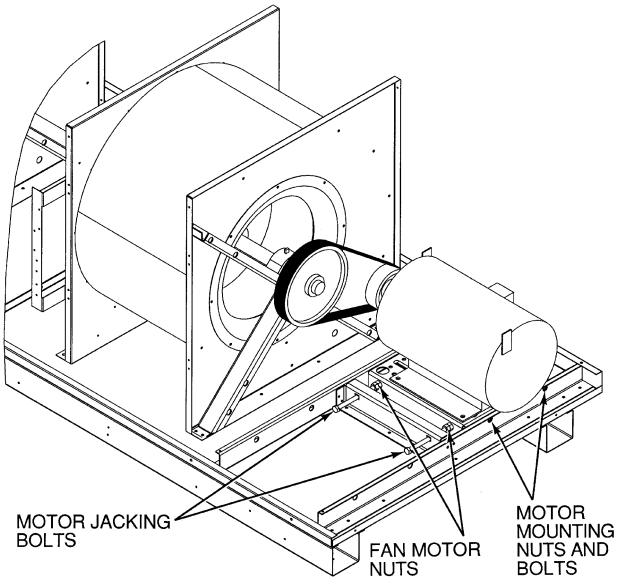

Fig. 39 — Belt Tension Adjustment

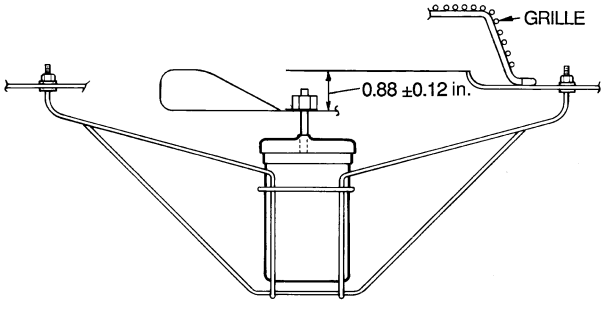

Fig. 40 — Condenser-Fan Adjustment

3. Fully retract motor plate adjusting bolts.
4. Loosen the 2 rear (nearest the evaporator coil) motor plate nuts.
5. Remove the 2 front motor plate nuts and carriage bolts.
6. Slide motor plate to the rear (toward the coil) and remove fan belt(s).
7. Slide motor plate to the front and hand tighten one of the rear motor plate nuts (tight enough to prevent the motor plate from sliding back but loose enough to allow the plate to pivot upward).
8. Pivot the front of the motor plate upward enough to allow access to the motor mounting hex bolts and secure in place by inserting a prop.
9. Remove the nuts from the motor mounting hex bolts and remove motor.
10. Reverse above steps to install new motor.

Power Failure — Dampers have a spring return. In event of power failure, dampers will return to fully closed position until power is restored.

Refrigerant Charge — Amount of refrigerant charge is listed on unit nameplate and in Table 1. Refer to Carrier GTAC II; Module 5; Charging, Recovery, Recycling, and Reclamation section for charging methods and procedures.

Unit panels must be in place when unit is operating during charging procedure.

NO CHARGE — Use standard evacuating techniques. After evacuating system, weigh in the specified amount of refrigerant (refer to Table 1).

LOW CHARGE COOLING — Using appropriate cooling charging chart (see Fig. 41 and 42), add or remove refrigerant until conditions of the appropriate chart are met. Note that charging chart is different from those normally used. An accurate pressure gage and temperature sensing device are required. Measure liquid line pressure at the liquid line service valve using pressure gage. Connect temperature sensing device to liquid line near the liquid line service valve and insulate it so that outdoor ambient temperature does not affect reading. Indoor-air cfm must be within normal operating range of unit. Take outdoor ambient temperature and read the suction pressure gage. Refer to appropriate chart to determine correct suction temperature. If intersection point on chart is above the curve, add refrigerant. If intersection point on chart is below curve, carefully recover some of the charge. Recheck suction pressure as charge is adjusted.

Filter Drier — Replace whenever refrigerant system is exposed to atmosphere.

Thermostatic Expansion Valve (TXV) — Each circuit has one. It is nonadjustable and is factory set to maintain 10 to 13° F superheat leaving the evaporator coil. Controls flow of liquid refrigerant to the evaporator coils.

Protective Devices

COMPRESSOR PROTECTION

Overcurrent — Each compressor has one manual reset, calibrated trip, magnetic circuit breaker. Do not bypass connections or increase the size of the circuit breaker to correct trouble. Determine the cause and correct it before resetting the breaker.

Overtemperature — Each 06D type compressor (024-038 units only) has an internal protector to protect it against excessively high discharge gas temperatures.

Crankcase Heater — Each compressor has a crankcase heater to prevent absorption of liquid refrigerant by oil in the crankcase when the compressor is idle. Since power for the crankcase heaters is drawn from the unit incoming power, main unit power must be on for the heaters to be energized.

> IMPORTANT: After a prolonged shutdown or service job, energize the crankcase heaters for 24 hours before starting the compressors.

EVAPORATOR-FAN MOTOR PROTECTION — A manual reset, calibrated trip, magnetic circuit breaker protects against overcurrent. Do not bypass connections or increase the size of the breaker to correct trouble. Determine the cause and correct it before resetting the breaker. If the evaporator-fan motor is replaced with a different horsepower motor, resizing of the circuit breaker is required. Contact Carrier Application Engineering.

CONDENSER-FAN MOTOR PROTECTION — Each condenser-fan motor is internally protected against overtemperature.

HIGH- AND LOW-PRESSURE SWITCHES — If either switch trips, or if the compressor overtemperature switch activates, that refrigerant circuit will be automatically locked out. To reset, manually move the thermostat setting.

FREEZE PROTECTION THERMOSTAT (FPT) — An FPT is located on the evaporator coil for each circuit. It detects frost build-up and turns off the compressor, allowing the coil to clear. Once the frost has melted, the compressor can be reenergized.

Relief Devices — All units have relief devices to protect against damage from excessive pressures (i.e., fire). These devices are installed on the suction line, liquid line, and on the compressor.

Control Circuit, 24-V — This control circuit is protected against overcurrent by a 3.2-amp circuit breaker (CB4). Breaker can be reset. If it trips, determine cause of trouble before resetting.

Control Circuit, 115-V — This control circuit is protected against overcurrent by a 5.0-amp circuit breaker (CB3). Breaker can be reset. If it trips, determine cause of trouble before resetting.

Compressor Lockout Logic — If any of the safeties trip, the circuit will automatically reset (providing the safety has reset) and restart the compressor in 15 minutes. If any of the safeties trip 3 times within a 90-minute period, then the circuit will be locked out and will require manual resetting by turning off either the unit disconnect or the control circuit breaker, or opening the thermostat.

Replacement Parts — A complete list of replacement parts may be obtained from any Carrier distributor upon request.

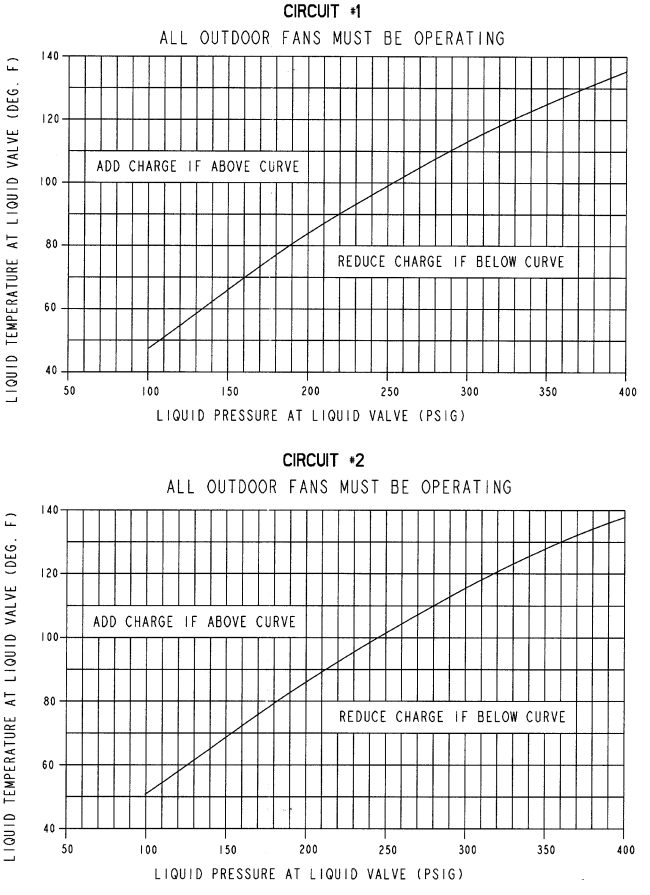

Fig. 41 — Cooling Charging Chart, Sizes 024-034

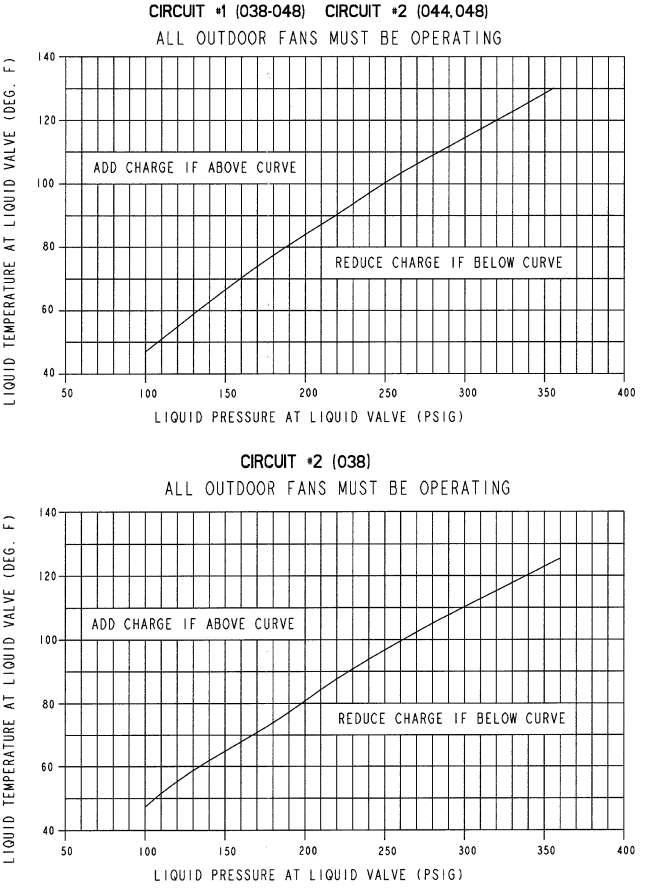

Fig. 42 — Cooling Charging Chart, Sizes 038-048

Typical refrigerant circuiting diagrams are shown in Fig. 43-45.

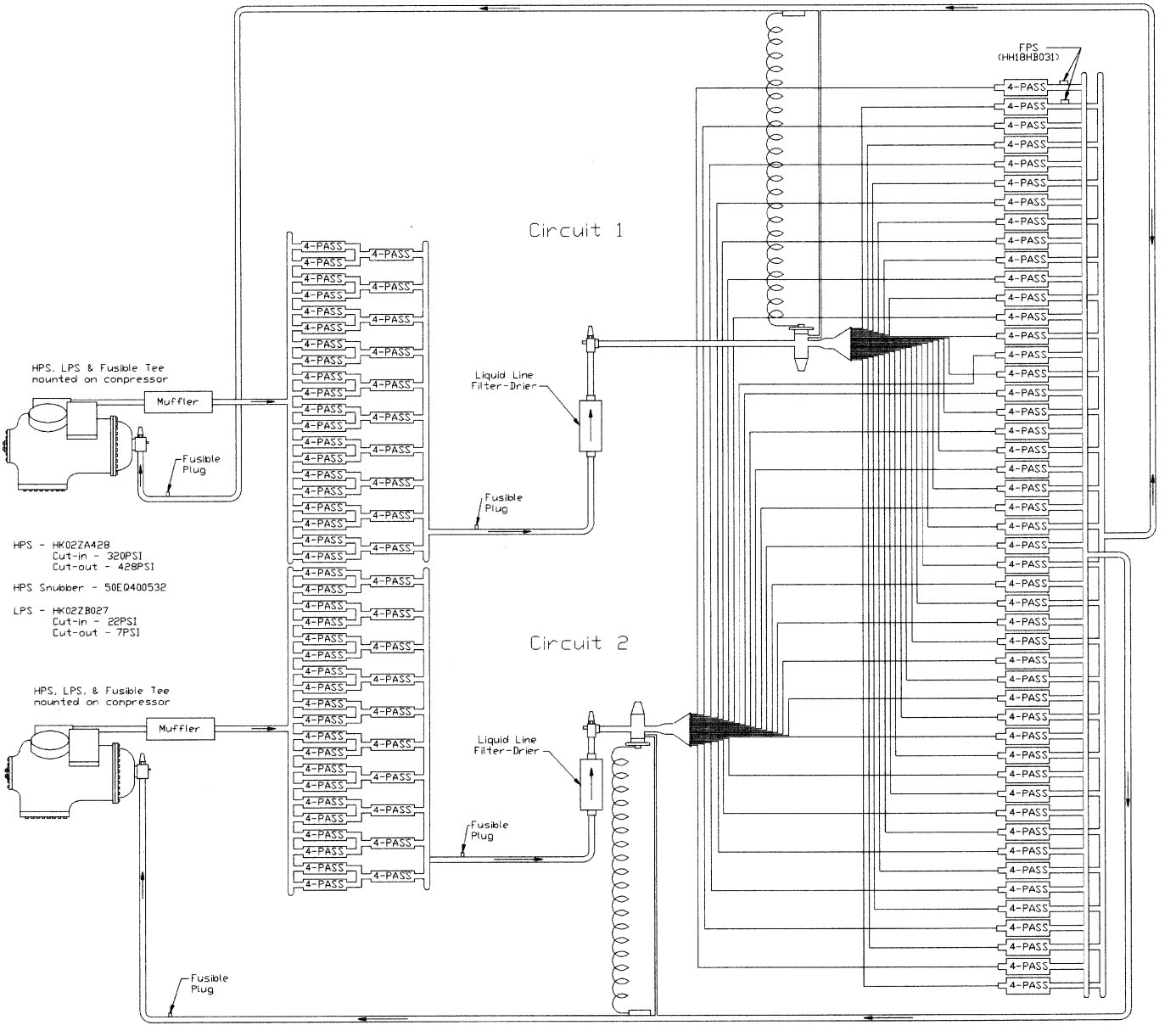

LEGEND

FPS — Freeze Protection Switch
HPS — High-Pressure Switch
LPS — Low-Pressure Switch

Fig. 43 — Typical Refrigerant Circuiting (50EJ,EK,EW,EY024-034)

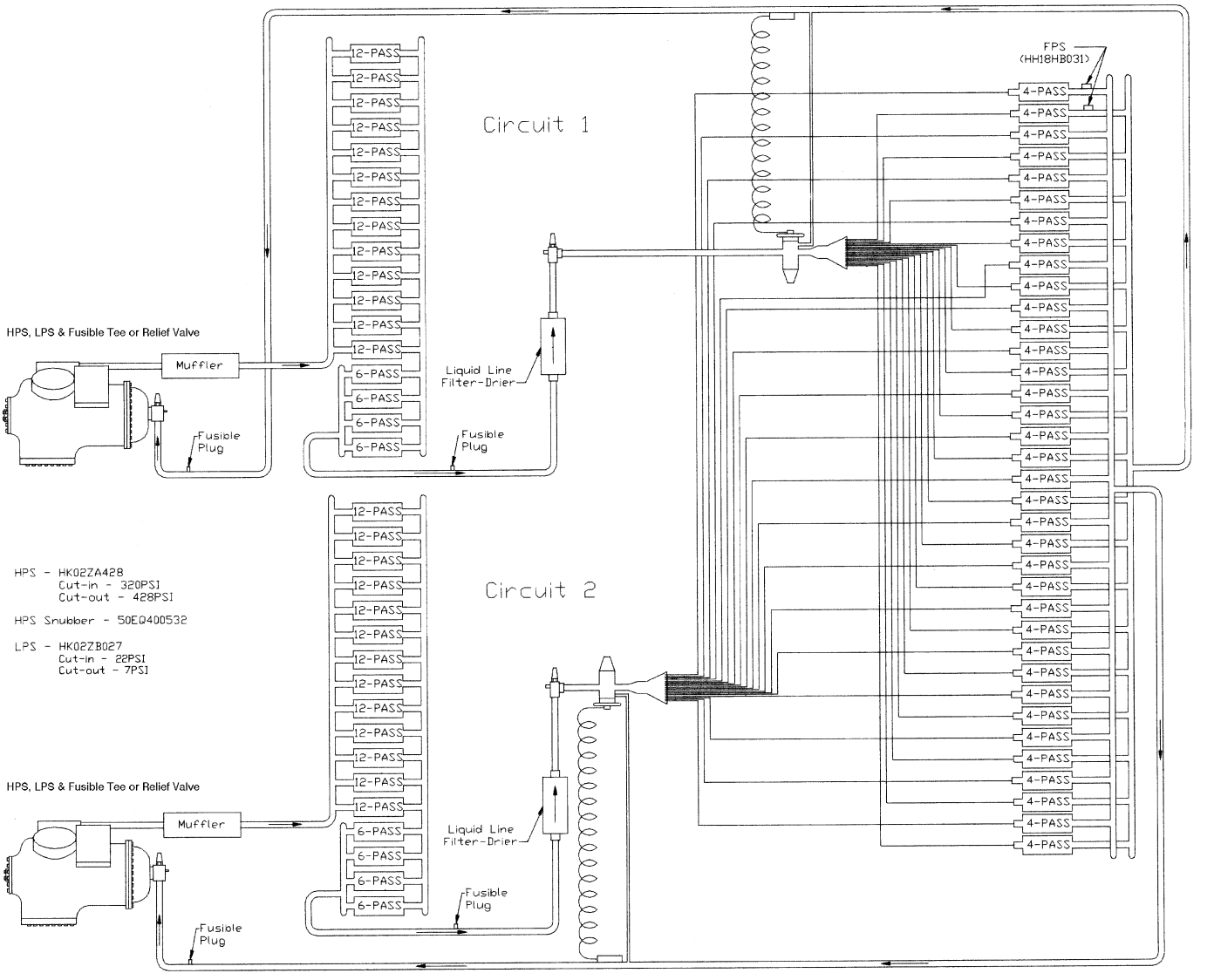

LEGEND

FPS — Freeze Protection Switch
HPS — High-Pressure Switch
LPS — Low-Pressure Switch

Fig. 44 — Typical Refrigerant Circuiting (50EJ,EK,EW,EY038,044)

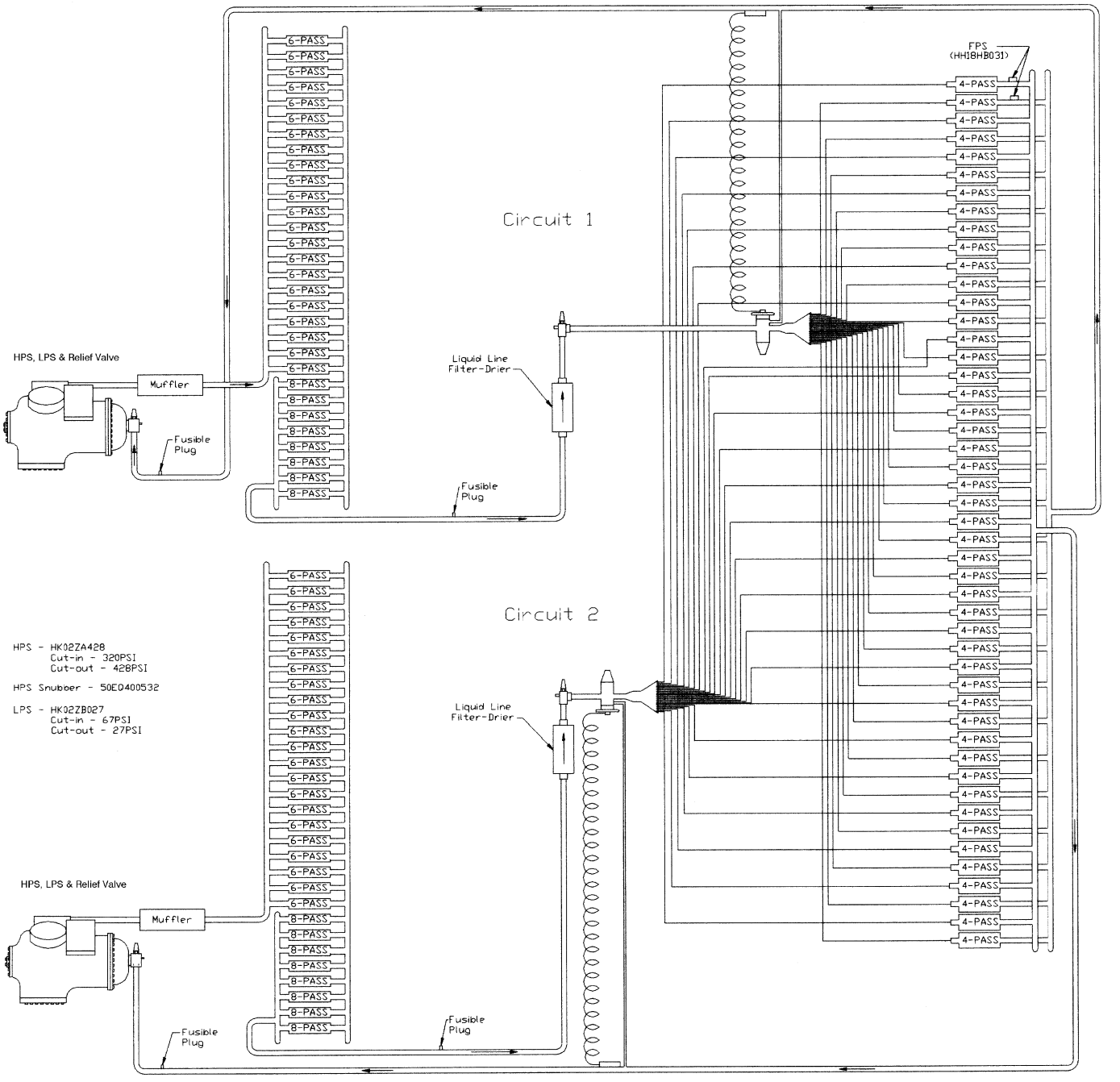

LEGEND

FPS — Freeze Protection Switch
HPS — High-Pressure Switch
LPS — Low-Pressure Switch

Fig. 45 — Typical Refrigerant Circuiting (50EJ,EW048)

Diagnostic LEDs (Light-Emitting Diodes) — There are 3 LEDs (red, yellow, and green) on the lower right hand side of the control board. The red light is used to check unit operation and alarms. A constant pulse is normal unit operation. A series of quick blinks indicates an alarm. Refer to Table 20 below for a description of alarms. The yellow LED blinks during transmission with the CCN (Carrier Comfort Network). The green LED blinks during transmission with the expansion board.

Table 20 — Control Board LED Alarms

LED BLINKS	ERROR CODE	DESCRIPTION	TROUBLESHOOTING COMMENTS
1		Normal Operation	The expansion board and control board flash the red LED in one-second intervals when the board is operating properly.
2	HF-13	Compressor 1 Safety	The high or low pressure safety switch for compressor no. 1 has opened for 3 seconds. The error will be cleared and compressor no. 1 will be allowed to turn on in 15 minutes. If the safeties have been tripped 3 times in 90 minutes, compressor no. 1 will be locked out until the control board has been manually reset.
3	HF-14	Compressor 2 Safety	The high or low pressure safety switch for compressor no. 2 has opened for 3 seconds. The error will be cleared and compressor no. 2 will be allowed to turn on in 15 minutes. If the safeties have been tripped 3 times in 90 minutes, compressor no. 2 will be locked out until the control board has been manually reset.
4	HF-15	Thermostat Failure	The thermostat is calling for both heating and cooling at the same time. The unit will operate on a first call basis and will automatically reset.
5	HF-05	SAT Thermistor Failure	The supply-air temperature (SAT) sensor has failed. First check for wiring errors, then replace sensor.
6	HF-06	OAT Thermistor Failure	The outside-air temperature (OAT) sensor has failed. First check for wiring errors, then replace sensor.
7	HF-03	Space Temp. Sen. Failure	The space temperature sensor has failed. First check for wiring errors, then replace sensor.
8	HF-12	RAT Thermistor Failure	The return-air temperature (RAT) sensor has failed. Ensure that the unit is a VAV unit. If NOT a VAV unit set DIP switch position 1 to the closed position and reset power. Then check for wiring errors. Finally, replace sensor.
9	SE-05	Loss of Communications with Expansion board	Communications between the expansion board and the control board have been interrupted. Ensure that an expansion board is installed and wired using the wire harness supplied with the expansion module. If an expansion board is not used ensure that DIP switch position 3 is in the closed position, and reset power.
10	HF-16	Control Board Failure	Generated when hardware has failed on control board. Replace the control board.
11	HF-17	Expansion Board Failure	Generated when hardware has failed on the expansion board. Replace the expansion board.

LEGEND

DIP — Dual In-Line Package
LED — Light-Emitting Diode
VAV — Variable Air Volume

Tables 21-23 show the input and output channel designations.

Table 21 — I/O Channel Designations Base Module — CV

TERMINAL NO.	ASSIGNMENT
T1-2	SPT (CCN) — 10KΩ Thermistor
T3-4	STO (CCN) — 10KΩ Thermistor
T5-6	OAT — 5KΩ Thermistor
T7-8	SAT — 5KΩ Thermistor
T9-10	—
T11-12	SAT Reset — AI (2-10 vdc)
T13-14	—
T15-16	—
T17-25	Y1 or Remote Start/Stop — DI (24 vac)
T18-25	Y2 — DI (24 vac)
T19-25	W1 — DI (24 vac)
T20-25	W2 — DI (24 vac)
T21-25	G — DI (24 vac)
T22-25	Compressor 1 Safety — DI (24 vac)
T23-25	Compressor 2 Safety — DI (24 vac)
T24-25	Outside Air Enthalpy — DI (24 vac)
T26-27	Economizer Pos. — AO (4-20 mA)
T28-29	Heat 1 Relay — DO (24 vac)
T30-29	Heat 2 Relay — DO (24 vac)
T31-32	CV Power Exhaust 1/Modulating Pwr Exht — DO (115 vac)
T33-32	CV Power Exhaust 2 — DO (115 vac)
T34-35	Condenser Fan — DO (115 vac)
T36-35	OFC2 — DO (115 vac)
T37-38	—
T39-38	—
K1	Indoor Fan Relay — DO (HV)
K2	Compr. 1 — DO (HV)
K3	Compr. 2 — DO (HV)

LEGEND
(Tables 21 and 22)

AI — Analog Input
AO — Analog Output
CCN — Carrier Comfort Network
CV — Constant Volume
DI — Direct Input
DO — Direct Output
HV — High Voltage
KΩ — Kilo-Ohms
OAT — Outdoor-Air Temperature
OFC — Outdoor Fan Contactor
RAT — Return-Air Temperature
SAT — Supply-Air Temperature
SPT — Space Temperature
STO — Space Temperature Offset
T — Terminal
VAV — Variable Air Volume

Table 22 — I/O Channel Designations Base Module — VAV

TERMINAL NO.	ASSIGNMENT
T1-2	SPT (CCN) — 10KΩ Thermistor
T3-4	RAT — 5KΩ Thermistor
T5-6	OAT — 5KΩ Thermistor
T7-8	SAT — 5KΩ Thermistor
T9-10	—
T11-12	SAT Reset — AI (2-10 vdc)
T13-14	—
T15-16	—
T17-25	Remote Start/Stop — DI (24 vac)
T18-25	—
T19-25	—
T20-25	—
T21-25	—
T22-25	Compressor 1 Safety — DI (24 vac)
T23-25	Compressor 2 Safety — DI (24 vac)
T24-25	Outside Air Enthalpy — DI (24 vac)
T26-27	Economizer Pos. — AO (4-20 mA)
T28-29	Heat 1 Relay — DO (115 vac)
T30-29	Heat Interlock Relay — DO (115 vac)
T31-32	Modulated Power Exhaust — DO (115 vac)
T33-32	—
T34-35	Condenser Fan — DO (115 vac)
T36-35	OFC2 — DO (115 vac)
T37-38	Unloader 1 — DO (115 vac)
T39-38	Unloader 2 — DO (115 vac)
K1	Indoor Fan Relay — DO (HV)
K2	Compr. 1 — DO (HV)
K3	Compr. 2 — DO (HV)

Table 23 — I/O Channel Designations Expansion Module — CV and VAV

TERMINAL NO.	ASSIGNMENT
T1-2	—
T3-4	—
T5-6	—
T7-8	—
T9-10	—
T11-12	IAQ Indoor — AI (2-10 vdc)
T13-14	IAQ Outdoor — AI (2-10 vdc)
T15-16	—
T17-25	Fan Status — DI (24 vac)
T18-25	Filter Status — DI (24 vac)
T19-25	Field Applied Status — DI (24 vac)
T20-25	Demand Limit — DI (24 vac)
T21-25	Fire — Unit Shutdown — DI (24 vac)
T22-25	Fire — Pressurization — DI (24 vac)
T23-25	Fire — Evacuation — DI (24 vac)
T24-25	Fire — Smoke Purge — DI (24 vac)
T26-27	—
T28-29	—
T30-29	Alarm Light Indicator — DO (24 vac)
T31-32	Power Exhaust Fire #1 — DO (115 vac)
T33-32	Power Exhaust Fire #2 — DO (115 vac)
T34-35	Power Exhaust Fire #3 — DO (115 vac)
T36-35	Power Exhaust Fire #4 — DO (115 vac)
T37-38	—
T39-38	—
K1	—
K2	—
K3	—

LEGEND

AI — Analog Input
DI — Direct Input
DO — Direct Output
IAQ — Indoor Air Quality
T — Terminal

PACKAGED SERVICE TRAINING

Our packaged service training programs provide an excellent way to increase your knowledge of the equipment discussed in this manual. Product programs cover:

- Unit Familiarization
- Installation Overview
- Maintenance
- Operating Sequence

A large selection of product, theory, and skills programs is available. All programs include a video cassette and/or slides and a companion booklet. Use these for self teaching or to conduct full training sessions.

For a free Service Training Material Catalog (STM), call 1-800-962-9212. Ordering instructions are included.

Copyright 1996 Carrier Corporation

START-UP CHECKLIST

MODEL NO.: _____ SERIAL NO.: _____

SOFTWARE VERSION (SEE FIG. 15) _____ TECHNICIAN: _____

DATE: _____

PRE-START-UP:

☐ VERIFY THAT DIP SWITCH SETTINGS ARE CORRECT

☐ VERIFY THAT ALL PACKING MATERIALS HAVE BEEN REMOVED FROM UNIT

☐ REMOVE ALL SHIPPING HOLDDOWN BOLTS AND BRACKETS PER INSTRUCTIONS

☐ VERIFY INSTALLATION OF ECONOMIZER HOOD

☐ VERIFY INSTALLATION OF ALL OPTIONS AND ACCESSORIES

☐ VERIFY THAT CONDENSATE CONNECTION IS INSTALLED PER INSTRUCTIONS

☐ VERIFY THAT ALL ELECTRICAL CONNECTIONS AND TERMINALS ARE TIGHT

☐ CHECK THAT INDOOR-AIR FILTER IS CLEAN AND IN PLACE

☐ VERIFY THAT UNIT IS LEVEL WITHIN TOLERANCES

☐ CHECK FAN WHEELS AND PROPELLERS FOR LOCATION IN HOUSING/ORIFICE, AND VERIFY SET SCREW IS TIGHT

☐ VERIFY THAT FAN SHEAVES ARE ALIGNED AND BELTS ARE PROPERLY TENSIONED

☐ VERIFY THAT SUCTION, DISCHARGE, AND LIQUID LINE SERVICE VALVES ON EACH CIRCUIT ARE OPEN

START-UP

ELECTRICAL

SUPPLY VOLTAGE L1-L2 _____ L2-L3 _____ L3-L1 _____

COMPRESSOR AMPS — COMPRESSOR NO. 1 L1 _____ L2 _____ L3 _____

— COMPRESSOR NO. 2 L1 _____ L2 _____ L3 _____

SUPPLY FAN AMPS (CV) _____ EXHAUST FAN AMPS _____

(VAV) _____*

*VAV fan supply amps reading must be taken with a true RMS meter for accurate readings.

ELECTRIC HEAT AMPS (IF SO EQUIPPED) L1 _____ L2 _____ L3 _____

TEMPERATURES

OUTDOOR-AIR TEMPERATURE _____ F DB (Dry-Bulb)

RETURN-AIR TEMPERATURE _____ F DB _____ F WB (Wet-Bulb)

COOLING SUPPLY AIR _____ F

ELECTRIC HEAT SUPPLY AIR (IF SO EQUIPPED) _____ F

PRESSURES

REFRIGERANT SUCTION CIRCUIT NO. 1 _____ PSIG CIRCUIT NO. 2 _____ PSIG

REFRIGERANT DISCHARGE CIRCUIT NO. 1 _____ PSIG CIRCUIT NO. 2 _____ PSIG

☐ VERIFY REFRIGERANT CHARGE USING CHARGING CHARTS ON PAGE 45

START-UP CHECKLIST (cont)

GENERAL

☐ ECONOMIZER MINIMUM VENT AND CHANGEOVER SETTINGS TO JOB REQUIREMENTS

☐ ENSURE DRIVES OPERATE WITHIN LIMITS OF FAN PERFORMANCE TABLES

HIGH-PRESSURE SWITCH SETTING _____ PSIG

LOW-PRESSURE SWITCH SETTING _____ PSIG

MOTOR PULLEY PART NUMBER _____

FAN PULLEY PART NUMBER _____

BELT PART NUMBER _____

BELT SIZE _____ in.

FILTER QUANTITY _____

FILTER SIZES _____ in.

ADDITIONAL NOTES:

CUT ALONG DOTTED LINE

CUT ALONG DOTTED LINE

Copyright 1996 Carrier Corporation