50FEQ 04-28, 50GEQ 04-12
Single Package Rooftop Heat Pump Units with SystemVu™ Controls Version 1.X and Puron Advance™(R-454B) Refrigerant

Controls, Start-Up, Operation and Troubleshooting Instructions

IMPORTANT: This literature covers 50FEQ 04-28 and 50GEQ 04-12 models with SystemVu controls version 1.X (factory-installed option).

CONTENTS

Page

SAFETY CONSIDERATIONS 3
GENERAL 3
Conventions Used in This Manual 3
SENSOR/ACCESSORY INSTALLATION 4
BASIC CONTROL USAGE 4
SystemVu Control (factory-installed option) 4
SystemVu Interface 4
SystemVu Interface Operation 4
Accessory Navigator Display 5
- NAVIGATOR DISPLAY OPERATION

CCN Tables and Display 6
- FORCE HIERARCHY

START-UP 6
Unit Preparation 6
Refrigerant Service Ports 6
Crankcase Heater 6
Compressor Rotation 6
Power Supply 6
Internal Wiring 6
Evaporator Fan 7
Condenser Fans and Motors 7
Return-Air Filters 9
Outdoor-Air Inlet Screens 9
Accessory Installation 9
Leak Dissipation System 10
CONTROLS QUICK SET-UP 11
Control Set Point and Configuration Log 11
Initial Start-Up 11
- QUICK SETUP
- NETWORK SETUP
- SYSTEM AUTO TEST

Thermostat Control 11
Space Temperature Sensor Control - Direct Wired (T-55 or T-56 or T-59) 11
CCN Communication 11
- CCN LINKAGE CONTROL

BACnet Communication 12
- SYSTEM TOUCH DEVICE

RNET Communication Space Sensors 12
Field-Installed Accessories 12
- ECONOMIZER
- POWER EXHAUST
- ELECTRIC HEAT
- FIRE SHUTDOWN
- OUTDOOR ENTHALPY
- RETURN ENTHALPY
- SPACE HUMIDITY SENSOR
- IAQ SENSOR
- OAQ SENSOR
- FILTER STATUS
- PHASE MONITOR
- TWO POSITION DAMPER
- LOW AMBIENT

Programming Operating Schedules 12
- OCCUPANCY SCHEDULE
- DAY OF WEEK
- OCCUPIED FROM
- OCCUPIED TO

SERVICE TEST 13
Independent Outputs 14
Fan Test 14
Cooling Test 14
Heating Test 14
Automatic Test 14
THIRD PARTY CONTROL 15
Cooling/Heating Control 15
Remote Occupancy 15
Remote Shutdown 15
Alarm Output 15
Economizer Damper Control 15
CONTROLS OPERATION 15
Display Configuration 15
Unit Configuration 15
Configurable Switches and Analog Sensors 16
General Operation 17
Demand Determination 18
- THERMOSTAT DEMAND
- SPACE SENSOR DEMAND

Setpoint Determination 18
Temperature Demand 19
- RAT DEMAND
- HUMIDITY DEMAND
- SPACE RELATIVE HUMIDITY

Occupancy Determination 19
- LEVEL 1 PRIORITY
- LEVEL 2 PRIORITY

Manufacturer reserves the right to discontinue, or change at any time, specifications or designs without notice and without incurring obligations.

- LEVEL 3 PRIORITY

Indoor Fan Operation 20
- INDOOR (SUPPLY) FAN MAXIMUM SPEED (MAXIMUM IDF SPEED)
- VENTILATION INDOOR FAN SPEED (VENT IDF SPEED)
- HEATING INDOOR FAN SPEED (HEATING IDF SPD)
- FREE COOLING INDOOR FAN SPEED (FREE COOL IDF SPD)
- LOW COOLING INDOOR FAN SPEED
- HIGH COOLING INDOOR FAN SPEED (HIGH COOL IDF SPD)

Cooling Operation 21
- COOLING MODE CONTROL
- COOLING STAGING CONTROL
- COMPRESSOR CONTROL
- OUTDOOR FAN CONTROL

Indoor Fan Based Dehumidification 24
- MAX DEHUM
- MAX COMFORT

Heating Operation 24
- HEATING MODE CONTROL
- SUPPLY-AIR TEMPERATURE SENSOR (SAT) HEAT MODE
- HEATING STAGING CONTROL
- HEATER CONTROL
- DEFROST CONTROL

Supply Air Tempering 26

Two Position Damper Operation 26

Economizer Operation 26
- MINIMUM VENTILATION

Free Cooling 28
- DRY BULB LOCKOUT
- ENTHALPY LOCKOUT
- UNOCCUPIED FREE COOLING LOCKOUT

Unoccupied Free Cooling 28

Power Exhaust 28

Indoor Air Quality (IAQ) 29
- IAQ (ANALOG INPUT)
- OUTDOOR AIR QUALITY (ANALOG INPUT)

Pre-occupancy Purge 30

Temperature Compensated Start 30

Smoke Control 30
- FIRE SHUTDOWN MODE
- EVACUATION MODE
- SMOKE PURGE MODE
- PRESSURIZATION MODE

Linkage 31

Carrier Comfort Network (CCN) Operation 31

BACnet Network Operation 31

Alarm Handling 32
- ALARM RELAY OUTPUT

TROUBLESHOOTING 32

Complete Unit Stoppage 32

Restart Procedure 32

Faults and Alerts 32
- VIEWING AND CLEARING UNIT ALARMS
- DIAGNOSTIC ALARM CODES AND POSSIBLE CAUSES

Control Module Communication 39
- RED LED
- GREEN LED
- YELLOW LED

Communication Failures 39

Cooling Troubleshooting 39

Economizer Troubleshooting 39
- ECONOMIZER CALIBRATION

Heating Troubleshooting 41
- ELECTRIC HEAT

Phase Protection 42
- PHASE REVERSAL PROTECTION
- PHASE LOSS PROTECTION
- CONTROL VOLTAGE NOTE

Thermistor Troubleshooting 42
- AIR TEMPERATURES
- THERMISTOR/TEMPERATURE SENSOR CHECK

Sensor Trim 43

Transducer Troubleshooting 43

Restore Factory Defaults 49

MAJOR SYSTEM COMPONENTS 49

General 49

Main Base Board (MBB) 64

Protective Devices 66
- COMPRESSOR PROTECTION
- EVAPORATOR FAN MOTOR PROTECTION
- CONDENSER FAN MOTOR PROTECTION
- LEAK PROTECTION
- SATURATED SUCTION PRESSURE (SSP)
- CONDENSATE OVERFLOW SWITCH (COFS)

Space Mounted Sensors 66
- SPACE TEMPERATURE SENSOR (T-55)
- SPACE TEMPERATURE SENSOR (T-56)
- ZS SPACE SENSOR

ZS Motion Sensor 68
- ZS MOTION SENSOR SCHEDULE OVERRIDE
- ZS MOTION SENSOR STANDALONE REMOTE OCCUPANCY SENSOR
- ZS MOTION SENSOR TEMPERATURE OFFSET ONLY SENSOR
- ZS MOTION SENSOR TROUBLESHOOTING

Carrier Comfort Network (CCN) Interface 69

APPENDIX A — SYSTEMVU™ CONTROLLER DISPLAY 71

APPENDIX B — SYSTEMVU CONTROLLER TEXT POINT REFERENCE 97

APPENDIX C — NAVIGATOR™ DISPLAY 98

APPENDIX D — SYSTEMVU CONTROLLER CCN TABLES 108

APPENDIX E — BACNET POINTS LIST 140

CONTROL SETPOINT AND CONFIGURATION LOG 152

UNIT START-UP CHECKLIST CL-1

SAFETY CONSIDERATIONS

Installation and servicing of air-conditioning equipment can be hazardous due to system pressure and electrical components. Only trained and qualified service personnel should install, repair, or service air-conditioning equipment. Untrained personnel can perform the basic maintenance functions of replacing filters. Trained service personnel should perform all other operations.

When working on air-conditioning equipment, observe precautions in the literature, tags and labels attached to the unit, and other safety precautions that may apply. Follow all safety codes. Wear safety glasses and work gloves. Use quenching cloth for unbrazing operations. Have fire extinguishers available for all brazing operations.

Follow all safety codes. Wear safety glasses and work gloves. Have fire extinguisher available. Read these instructions thoroughly and follow all warnings or cautions attached to the unit. Consult local building codes and National Electrical Code (NEC) for special requirements.

Recognize safety information. This is the safety-alert symbol ⚠.When you see this symbol on the unit and in instructions or manuals, be alert to the potential for personal injury.

Understand the signal words DANGER, WARNING, and CAUTION. These words are used with the safety-alert symbol. DANGER identifies the most serious hazards which will result in severe personal injury or death. WARNING signifies a hazard which could result in personal injury or death. CAUTION is used to identify unsafe practices which may result in minor personal injury or product and property damage. NOTE is used to highlight suggestions which will result in enhanced installation, reliability, or operation.

⚠ WARNING

ELECTRICAL SHOCK HAZARD

Failure to follow this warning could cause personal injury or death.

Before performing service or maintenance operations on unit, turn off main power switch to unit and install lockout tag. Ensure electrical service to rooftop unit agrees with voltage and amperage listed on the unit rating plate.

⚠ CAUTION

UNIT DAMAGE HAZARD

Failure to follow this caution may cause equipment damage.

This unit uses a microprocessor-based electronic control system. Do not use jumpers or other tools to short out components or to bypass or otherwise depart from recommended procedures. Any short-to-ground of the control board or accompanying wiring may destroy the electronic modules or electrical components.

⚠ WARNING

UNIT OPERATION AND SAFETY HAZARD

Failure to follow this warning could cause personal injury, death and/or equipment damage.

R-454B is an A2L refrigerant. All service equipment or components must be A2L refrigerant rated. Do not use non-A2L rated equipment or components on R-454B refrigerant equipment

⚠ WARNING

PROPERTY OR PERSONAL INJURY HAZARD

Risk of fire. Flammable refrigerant used.

To be installed and/or repaired only by trained service personnel. Do not puncture refrigerant tubing.

Auxiliary devices which may be ignition sources shall not be installed in the ductwork, other than the auxiliary devices listed for use with the specific appliance, See instructions.

Dispose of refrigerant properly in accordance with federal or local regulations.

⚠ WARNING

PERSONAL INJURY AND ENVIRONMENTAL HAZARD

Failure to follow this warning could cause personal injury or death.

Relieve pressure and recover all refrigerant before system repair or final unit disposal.

Wear safety glasses and gloves when handling refrigerants. Keep torches and other ignition sources away from refrigerants and oils.

GENERAL

This publication contains Start-Up, Controls, Operation, Service, and Troubleshooting information for the 50FEQ and 50GEQ rooftop heat pump units equipped with the factory-installed optional SystemVu controls (version 1.X or higher) and use Puron Advance™ (R-454B) refrigerant. The specific base unit installation instructions, service manual and/or wiring label diagram may also be required in conjunction with this book as a guide to a specific unit on the roof. All units in Table 1 allow for stand-alone or network operation. The 50FEQ 04, 05, and 06 are single speed operation units. The 50FEQ 07-28 and all 50GEQ units are Staged Air Volume (SAV™) units that allow for stand-alone or network operation.

Table 1 — Rooftop Units

MODEL	SIZE	NOMINAL TONS
50FEQ	04	3
	05	4
	06	5
	07	6
	08	7.5
	09	8.5
	12	10
	14	12.5
	17	15
	24	20
	28	25
50GEQ	04	3
	05	4
	06	5
	07	6
	08	7.5
	09	8.5
	12	10

Conventions Used in This Manual

The following conventions for discussing configuration points for the local display (SystemVu controller or Navigator™ accessory) will be used in this manual.

Menu paths will be written with the main menu name first, then any menus or sub menus, each separated by an arrow symbol (→) and will also be shown in bold and italics. As an example, the General sub menu which is located in the Setting main menu under Unit Configuration menu would be written as ***SETTINGS → UNIT CONFIGURATIONS → GENERAL***.

This path name will show the user how to navigate through the local display to reach the desired menu. The user scrolls through the Menus using the up and down keys. The arrow symbol in the path name represents pressing ENTER to move into the next level of the menu structure.

Point names are referenced in parentheses and bold and italics as would be shown on the local display.

CCN point names are also referenced for users configuring the unit with CCN software instead of the local display. See Appendix D starting on page page 108 at the end of this manual.

SENSOR/ACCESSORY INSTALLATION

There are a variety of sensors and accessories available for the SystemVu™ controller. Some of these can be factory or field installed, while others are only field installable. The SystemVu controller may also require connection to a building network system or building zoning system. All field control wiring that connects to the SystemVu controller must be routed through the raceway built into the corner post of the unit or secured to the unit control box with electrical conduit. The unit raceway provides the UL required clearance between high and low-voltage wiring. Pass the control wires through the hole provided in the corner post, then feed the wires through the raceway to the SystemVu controller. Refer to the unit installation instructions for wire routing per specific product and size variations. See the section "MAJOR SYSTEM COMPONENTS" on page 49 for board connections and typical controller wiring.

BASIC CONTROL USAGE

SystemVu Control (factory-installed option)

The SystemVu control is a comprehensive unit-management system. The control system is easy to access, configure, diagnose and troubleshoot.

The SystemVu control system is fully communicating and cable-ready for connection to the Carrier Comfort Network® (CCN), Carrier i-Vu®, and Third Party BACnet™[1] building management systems. The control provides high-speed communications for remote monitoring via the Internet. Multiple units can be linked together (and to other Direct Digital Control (DDC) equipped units) using a 3-wire communication bus.

The SystemVu control system is easy to access through the use of a integrated display module. A computer is not required for start-up. Access to control menus is simplified by the ability to quickly select from 7 main menu items. An expanded readout provides detailed explanations of control information. Only six buttons are required to maneuver through the entire controls menu. The display readout is designed to be visible even in bright sunlight.

SystemVu Interface

This integrated device is the keypad interface used to access the control information, read sensor values, and test the unit. The interface is located in the main control box and is standard on all units. The interface is a 6-key, 4x30 character, LCD (liquid-crystal display) display module. The interface also contains Status LEDs. (See Fig. 1.) The interface is easy to operate using 6 buttons and the main menu structures shown in Fig. 2.

Through the SystemVu interface, the user can access all of the inputs and outputs to check on their values and status, configure operating parameters, and evaluate the current decision status for operating modes. The control also includes an alarm history which can be accessed from the display. The user can access a built-in test routine that can be used at start-up commissioning and troubleshooting.

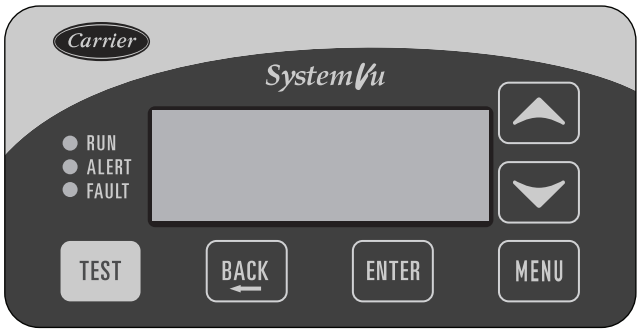

Fig. 1 — SystemVu Interface

SystemVu Interface Operation

Units are shipped from the factory with the SystemVu interface FIOP, located in the main control box. (See Fig. 1.) In addition, the interface has up and down arrow keys, BACK, ENTER, MENU, and TEST keys. These keys are used to navigate through the different levels of the menu structure. All discussions and examples in this document will be based on the SystemVu display except in the Navigator display section. See the section "Accessory Navigator Display" on page 5 for further details and Table 2 for the Navigator menu structure and usage.

The six keys are used to navigate through the display structure, which is organized in a tiered menu structure. If the buttons have not been used for a period, the display will default to a standby screen intended to provide a quick overall look at the system. To show the top-level display, press any key first to turn the display backlight on, and then press the MENU key. Then use the up and down arrow keys to scroll through the top-level menus. These are shown in Fig. 2 and listed in Appendix A.

When a specific menu or sub-menu is located, push the ENTER key to enter the menu. Depending on the menu, there may be additional tiers. Continue to use the up and down keys and the ENTER key until the desired display item is found. At any time, the user can move back a menu level by pressing the BACK key.

Once an item has been selected the display will flash showing the item, followed by the item value and then followed by the item units (if any). Pressing the TEST button at any time will jump the display to the test menu. Pressing the MENU button any time will jump the display to the main menu.

Items in the Configuration and Service Test menus are password protected. The display will prompt the enter password screen when required. Use the ENTER, BACK, and arrow keys to enter the four digits of the password. The default user password is 1111.

Pressing the BACK and ENTER keys simultaneously will show an expanded text description screen on the display indicating the full meaning of each display point. To put the screen in standby, hold down the BACK key for 5 seconds.

Some points can be forced from the SystemVu interface. To force a variable, follow the same process as editing a configuration parameter. A forced variable, regardless where the force has come from will be displayed with a lower case "f" following its value. For example, if ***ECON CMD POSITION*** is forced, the display shows "80%f", where the "f" is to signify a force on the point. Remove the force by selecting the point that is forced with the key ENTER and then pressing the up and down arrow keys simultaneously. Pressing ENTER and BACK on a forced item will display the expanded description for that item including the force level that is currently applied. Depending on the type of unit (50FEQ or 50GEQ), factory-installed options and field-installed accessories, some of the items in the various menus may not apply.

1. Third-party trademarks and logos are the property of their respective owners.

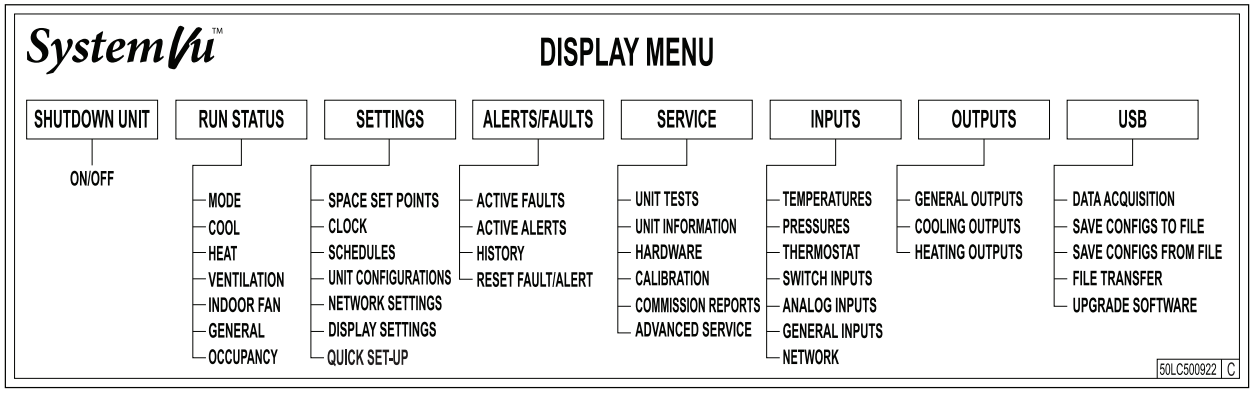

Fig. 2 — SystemVu - Main Menu Structures

Accessory Navigator Display

The accessory hand-held Navigator display can be used with the 50FEQ/50GEQ units. (See Fig. 3.) The Navigator display is plugged into the LEN (local equipment network) port on either the SystemVu display or the Main Base Board (MBB).

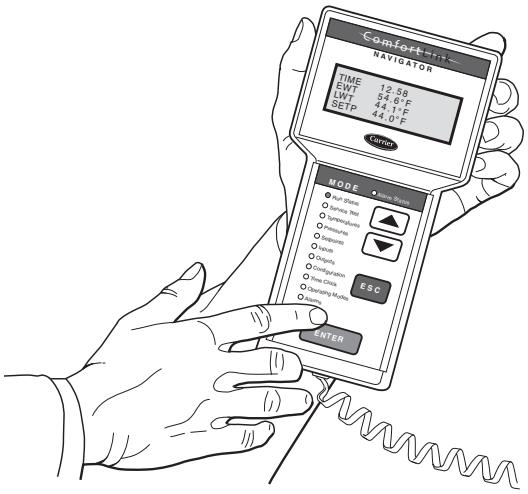

Fig. 3 — Accessory Navigator Display

NAVIGATOR DISPLAY OPERATION

The Navigator display has up and down arrow keys, an ESCAPE key and an ENTER key. These keys are used to navigate through the different levels of the display structure.

The four keys are used to navigate through the display structure, which is organized in a tiered mode structure. If the buttons have not been used for a period, the display will default to the AUTO VIEW display category as shown under the RUN STATUS category. To show the top-level display, press the ESCAPE key until a blank display is shown. Then use the up and down a row keys to scroll through the top-level categories. These are listed in Appendix C and will be indicated on the Navigator display by the LED next to each mode listed on the face of the display.

When a specific mode or sub-mode is located, push the ENTER key to enter the mode. Depending on the mode, there may be additional tiers. Continue to use the up and down keys and the ENTER keys until the desired display item is found. At any time, the user can move back a mode level by pressing the ESCAPE key. Once an item has been selected the display will flash showing the item, followed by the item value and then followed by the item units (if any).

Items in the Configuration and Service Test modes are password protected. The display will flash PASS and WORD when required. Use the ENTER and arrow keys to enter the four digits of the password. The default password is 1111.

Pressing the ESC and ENTER keys simultaneously will display an expanded text description across the display indicating the full meaning of each display point. Pressing the ESCAPE and ENTER keys when the display is blank (MODE LED level) will return the display to its default menu of rotating AUTO VIEW display items.

In addition, the password will need to be entered again before changes can be made.

Changing item values or testing outputs is accomplished in the same manner. Locate and display the desired item. If the display is in rotating auto-view, press the ENTER key to stop the display at the desired item. Press the ENTER key again so that the item value flashes. Use the arrow keys to change the value of state of an item and press the ENTER key to accept it. Press the ESCAPE key and the item, value or units display will resume. Repeat the process as required for other items.

There are some points that can be forced from the Navigator display. If the user needs to force a variable, follow the same process as when editing a configuration parameter. A forced variable, regardless where the force has come from will be displayed with a blinking “f” on a Navigator display following its value. For example, if economizer commanded position (***EC.CP***) is forced, the Navigator display shows “80f”, where the “f” is blinking to signify a force on the point. Remove the force by selecting the point that is forced with the key ENTER and then pressing the up and down arrow keys simultaneously.

Depending on the type of unit (50FEQ or 50GEQ), factory-installed options and field-installed accessories, some of the items in the various Mode categories may not apply.

See Table 2 and Appendix C for full Navigator display menu layout.

Table 2 — Navigator Mode and Menu Display Structure

RUN STATUS	SERVICE TEST	TEMPERATURES	PRESSURES	SETPOINTS	INPUTS	OUTPUTS	CONFIGURATION	TIMECLOCK	OPERATING MODES	ALARMS
Auto View of Run Status (VIEW) ↓ Cooling Status (COOL) ↓ Heating Status (HEAT) ↓ Ventilation Status (VENT) ↓ Assigned I/O Channels (A.IO) ↓ Versions (VERS)	Service Test Mode (TEST) ↓ Test Independent Outputs (INDP) ↓ Test Fans (FANS) ↓ Test Cooling (COOL) ↓ Test Heating (HEAT)				Thermostat Inputs (STAT) ↓ Switch Inputs (SW) ↓ Analog Inputs (AIS) ↓ General Inputs (GEN)	General Outputs (GEN) ↓ Cooling Outputs (COOL) ↓ Heating Outputs (HEAT)	General Unit Config (GEN) ↓ Indoor Fan Config (I.FAN) ↓ Economizer Config (ECON) ↓ Building Net Config (NET) ↓ User Display Config (DISP)	Time of Day (TIME) ↓ Month, Date Day and Year (DATE) ↓ Daylight Savings Config (DST) ↓ Schedules Adjust (SCHD) ↓ Holiday Adjustment (HLDY)		Curr Active Alarm (CURR) ↓ History (HIST) ↓ Reset All Current Alarms (R.CUR) ↓ Alarm Reset History (R.HIS)

CCN Tables and Display

In addition to the unit-mounted SystemVu display, the user can also access the same information through the CCN tables by using the service tool or other CCN programs/devices. The variable names used for the CCN tables and the SystemVu display menus may be different and more items may be displayed in the CCN tables. Details on the CCN tables are included in Appendix D.

FORCE HIERARCHY

There is a hierarchy in SystemVu controls with regards to forcing a point. Programs and devices write a force at different priority levels. A higher level (smaller number, 1 being the highest) will override a lower level force. The SystemVu controller uses a Control Force at level 7. The Navigator device writes a Service Force which is level 3. Network programs can be set to write different level priority forces.

NOTE: In the case of a control power reset, any force in effect at the time of power reset will be cleared.

IMPORTANT: All further discussions and examples in this document will be based on the SystemVu controller.

START-UP

IMPORTANT: Do not attempt to start unit, even momentarily, until all items on the Start-Up Checklist (see page CL-1) and the following steps have been read/completed.

Unit Preparation

Check that unit has been installed in accordance with installation instructions and all applicable codes.

Refrigerant Service Ports

The refrigerant system has a total of 3 Schrader-type service gauge ports per circuit. One port is located on the suction line, one on the compressor discharge line, and one on the liquid line. Be sure that caps on the ports are tight.

Crankcase Heater

The compressor is equipped with a crankcase heater. There is a control function used to turn the crankcase heaters on and off when the compressor is not running. This is a configurable value for which the factory default value is set to 65°F. If the ambient is above the selected value the control will prevent the crankcase heater from turning on.

IMPORTANT: Unit power must be on for 24 hours prior to start-up to allow the crankcase heater to run. Otherwise, damage to the compressor may result.

Compressor Rotation

⚠ CAUTION

UNIT DAMAGE HAZARD

Failure to follow this caution may result in unit damage.

Improper wiring will cause compressor stoppage and alarm.Correct wiring by switching leads as indicated below.

On 3-phase units, it is important to be certain the compressors are rotating in the proper direction. To determine whether or not compressors are rotating in the proper direction, use a phase-rotation meter on the unit input power to check for L1-L2-L3 or clockwise rotation or use the Service Test mode to energize a compressor. If the compressor is rotating in the wrong direction, the controls will stop the compressor and display alarm for “Circuit A Reverse Rotation”.

NOTE: Indoor or outdoor fan rotation direction may not indicate proper input power phase sequence, as some 3-phase units use single-phase fan motors.

To correct the wrong compressor rotation direction, perform the following procedure:

1. Turn off power to the unit and lock out the power.
2. Switch any two of the incoming unit power leads.
3. Turn on power to the unit.
4. Verify corrected compressor rotation.

Power Supply

All 208/230-v units are factory wired for 230-v power supply. If the 208/230-v unit is to be connected to a 208-v power supply, the transformers must be rewired by moving the wire from the 230-volt connection and moving to the 200-volt terminal on the primary side of the transformer. Refer to unit label diagram for additional information.

Internal Wiring

Check all electrical connections in unit control boxes; tighten as required.

Evaporator Fan

The evaporator fan does not need to be checked for rotation as it only operates in one direction. Refer to the unit product data for full Fan Performance tables and physical data. The specific unit's fan performance table is printed and adhered to the control box high voltage cover. See Fig. 4 for an example fan performance table.

Use the job specifications and unit fan performance table to determine the operating mode specific fan speeds. The following instructions are included in the unit installation instructions. When adjusting the Heating Fan Speed and High Cooling Fan Speed, ensure that the cfm is not lower than the minimum cfm allowed in the product data.

1. Check the job specifications for the cfm (cubic feet per minute) and ESP (external static pressure) required.
2. Using the chart on the Fan Speed Set Up labels (see Fig. 4), calculate the rpm from the cfm and ESP for the base unit plus any field accessories (as listed on the label).

   NOTE: The Fan Speed Set Up labels are located on the High Voltage cover in the Control Box.
3. Press any key on the SystemVu interface to activate the display backlight and then press the MENU key.
4. Using the UP and DOWN arrow keys highlight SETTINGS and then press ENTER.
5. Use the DOWN arrow key highlight the UNIT CONFIGURATIONS menu then press ENTER.
6. Highlight UNIT CONFIGURATIONS then press ENTER.
7. Highlight INDOOR FAN and then press ENTER.
8. Refer to the job specifications to set the following, determining the values per the RPM Calculator label (Fig. 4). Use the UP and DOWN arrow keys and the BACK key to set the values. Press ENTER after setting each value to continue to the next selection.

- IDF VENT SPD
- IDF HEAT SPD
- IDF HIGH COOL SPD
- IDF FREE COOL SPD

Service test mode can also be used to temporarily operate the Evaporator Fan with a percentage (0-100%) command. The fan test menu will show the converted rpm from the percentage being commanded. Refer to the section "SERVICE TEST" on page 13 for more details.

Adjust the IDF Maximum Fan Speed (***IDF MAX SPEED***) to restrict higher fan speeds as needed for sensitive applications.

> IMPORTANT: The IDF Maximum Fan Speed (***IDF MAX SPEED***) RPM must not produce a supply cfm that is lower than the minimum cfm allowed in the product data for heating and cooling. The IDF Maximum Fan Speed (***IDF MAX SPEED***) must also be greater than or equal to the highest operating mode speed setting.

Condenser Fans and Motors

Condenser fans and motors are factory set.

SystemVu™

FAN SPEED SETUP (RPM)

MAIN MENU:

SETTINGS

→ UNIT CONFIGURATIONS

→ INDOOR FAN

- → IDF VENT SPD -RPM
- → IDF HEAT SPD -RPM
- → IDF HIGH COOL SPD -RPM
- → IDF FREE COOL SPD -RPM

↓ DETERMINE RPM FROM BELOW ↓

48TC003136 REV. A

RPM Calculator

UNIT MODEL NUMBER / CFM	ESP in. wg 0.2	0.4	0.6	0.8	1.0	1.2	1.4	1.6	1.8	2.0
1500	1301	1477	1639	1788	1925	2054	2174	2289		
1625	1381	1544	1699	1843	1976	2101	2220	2332		
1750	1463	1615	1763	1902	2031	2152	2268	2378		
1875	1548	1688	1828	1962	2087	2206	2318			
2000	1633	1764	1897	2025	2146	2262	2372			
2125	1720	1842	1967	2090	2208	2320				
2250	1808	1921	2040	2157	2271	2380				
2375	1897	2003	2115	2227	2336					
2500	1987	2068	2191	2298						
Field Accessories:										
Economizer	66	66	66	66	66	66	66	66		
1 Stage E Heat	80	80	80	80	80	80	80	80		
2 Stage E Heat	107	107	107	107	107	107	107	107		

Fig. 4 — Example of Fan Speed Set Up Labels

Return-Air Filters

Check that correct filters are installed in filter tracks (see Physical Data table in unit Product Data). Do not operate unit without return-air filters. Determine the filter change run time (***DIRTY FILTER TIME***) to be set in the quick setup configurations menu. See Fig. 5-8 for filter access panel location.

Outdoor-Air Inlet Screens

Outdoor-air inlet screens must be in place before operating unit.

Accessory Installation

Check to make sure that all accessories including space thermostats and sensors have been installed and wired as required by the instructions and unit wiring diagrams.

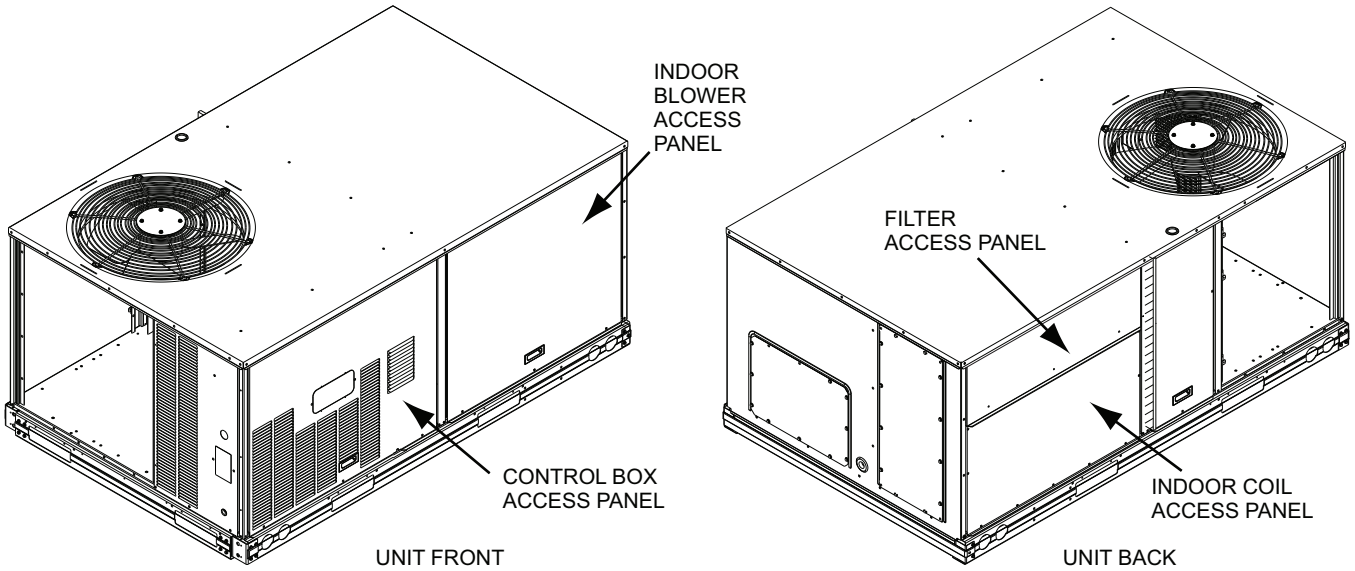

Fig. 5 — 50FEQ04-07 and 50GEQ04-06 Panel and Filter Locations

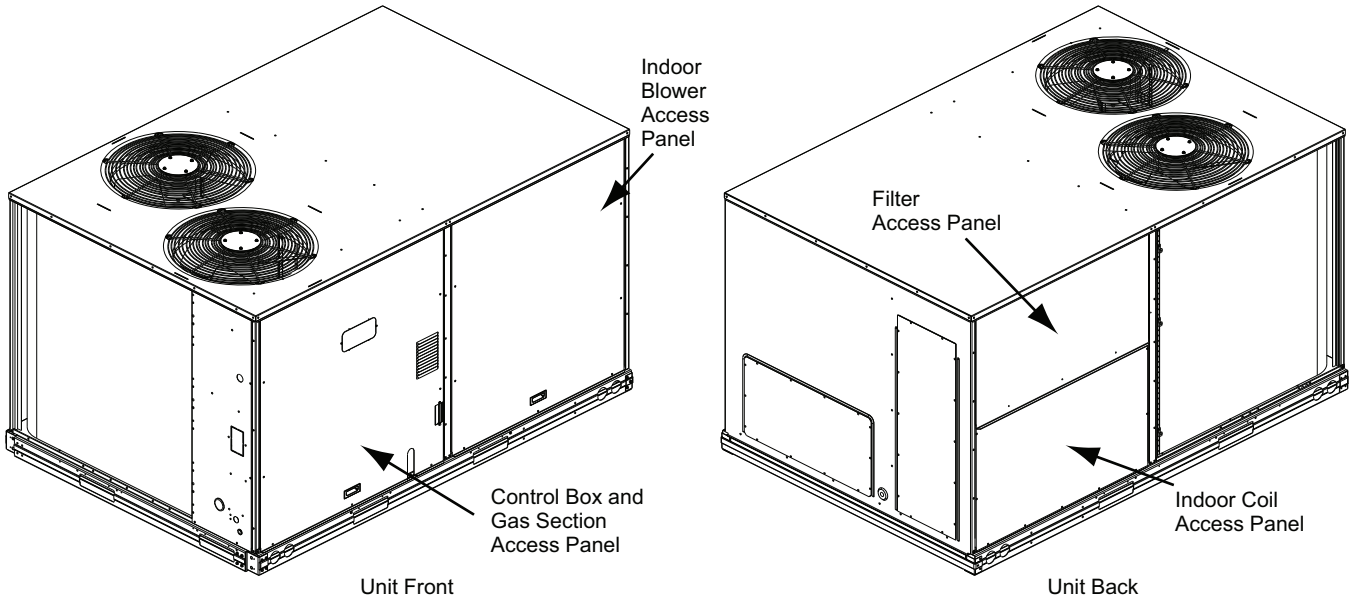

Fig. 6 — 50FEQ 08-12 and 50GEQ 07-09 Panel and Filter Locations

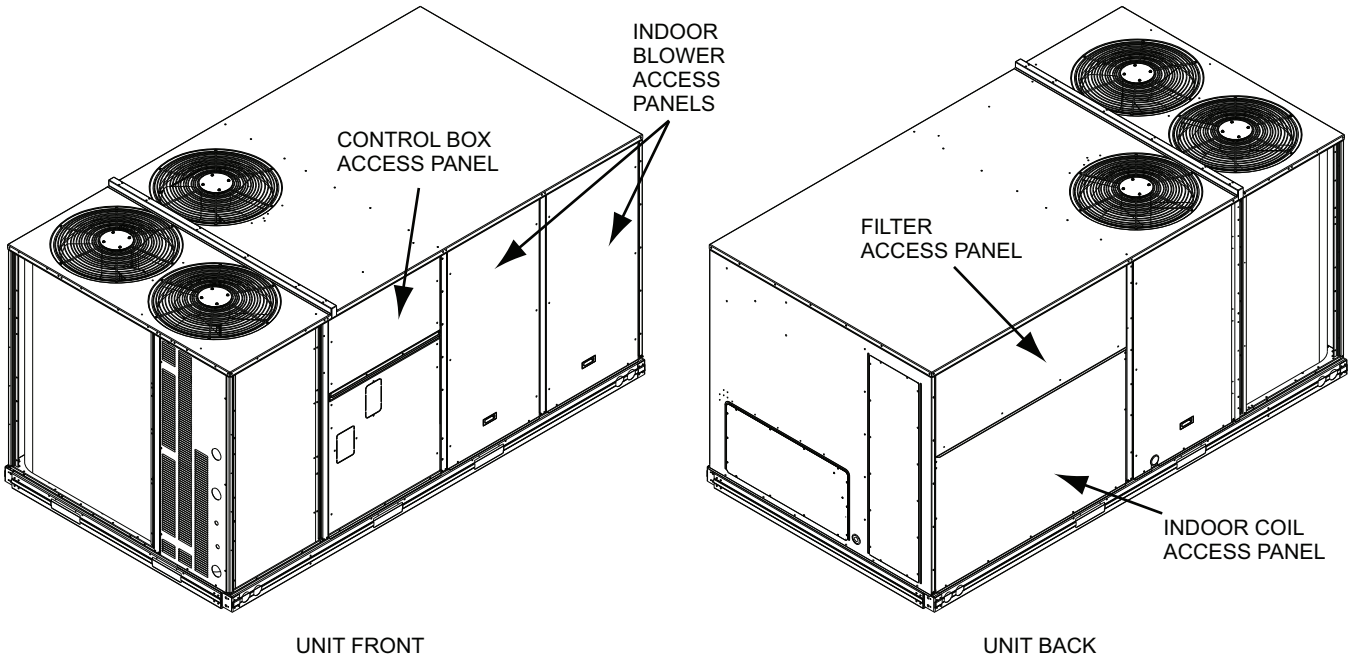

Fig. 7 — 50FEQ 14 and 50GEQ 12 Panel and Filter Locations

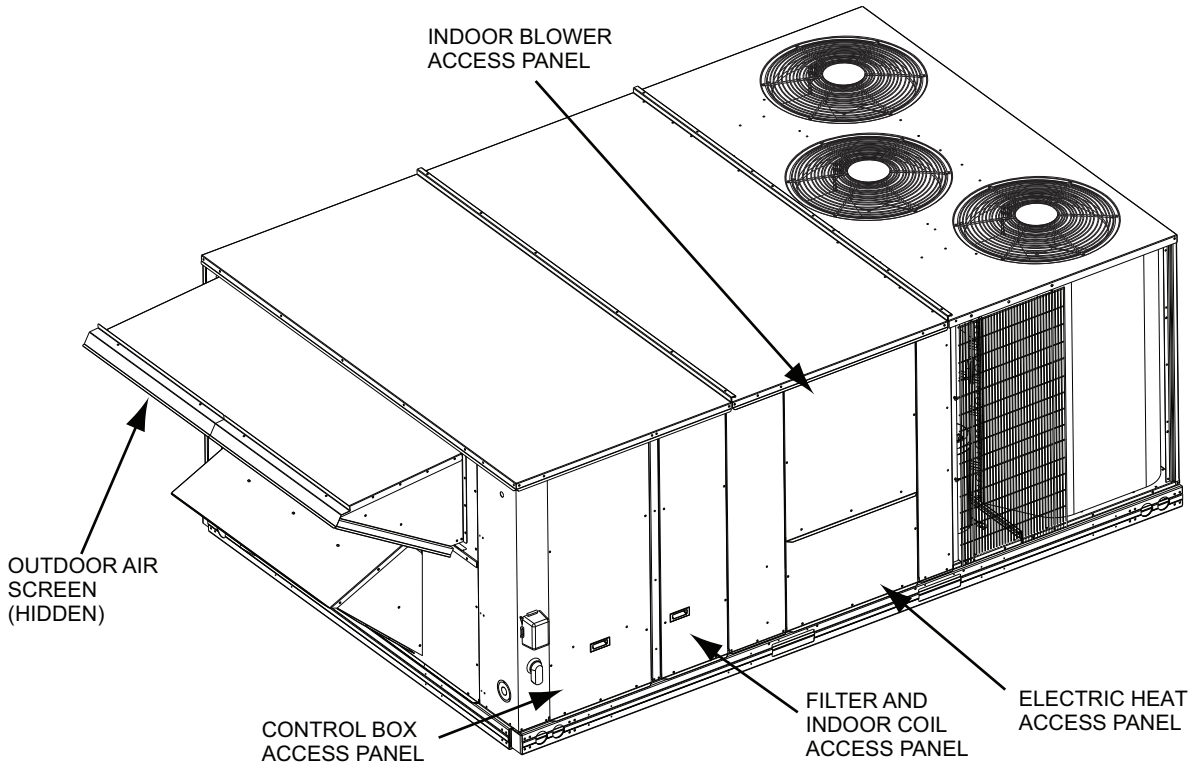

Fig. 8 — 50FEQ 17-28 Panel and Filter Locations – 15 Ton Unit Shown

Leak Dissipation System

Test the refrigerant leak dissipation system to ensure the system is function and at adequate air flow. In the return air section find the Dissipation control board (RDB), remove cover and press the test button for 1 to 2 seconds then release. The RDB will flash in test mode for 1 minute. During this time SystemVu will enter safety mode and issue the F220 alarm. The indoor fan will run at a fixed speed based on the unit size. The actual air flow will vary based on options and the building static, verify it meets the table in the base unit installation instructions. Once the test minute is over the Dissipation control (RDB) will return to normal but SystemVu will remain in safety mode for an additional 5 minute to ensure safety conditions. Refer to the base unit installation instructions for more details on the Leak Dissipation System.

CONTROLS QUICK SET-UP

The following information will provide a quick guide to setting up and configuring the 50FEQ and 50GEQ series units with SystemVu controls. Unit controls are pre-configured at the factory for factory-installed options. Field-installed accessories will require configuration at start-up. See Initial Start-Up below for recommended initial system start-up. Additionally, specific job requirements may require changes to default configuration values. See Appendix A and other sections of these instructions for more details. Refer to the Major System Components or accessory installation instructions for specific wiring detail.

Control Set Point and Configuration Log

During start up, accessory installation, and equipment service set points and/or configuration changes might have to be made. When setting set points or configuration settings, documentation is recommend. The "Control Set Point and Configuration Log" on page 152 should be filled out and left with the unit at all times, a copy should also be provided to the equipment owner. A USB jump drive can be used to back up the unit's configurations. Refer to the USB Operation section for details.

Initial Start-Up

Initial Startup refers to the first time this particular unit has a start-up performed. The SystemVu controller will continually display the Initial Startup prompt until it is completed. To complete the initial startup you must complete the Quick Setup, Network Setup, and the System Auto Test.

QUICK SETUP

This a list of common adjusted configurations set during startup. These are common accessories, and control means. Set the list in Table 3. After setting these per the specific unit set the ***QUICK SET CHKLIST*** point to done.

NETWORK SETUP

This is a shortcut to the Network Settings submenu. In this sub menu are the specific network settings required to get the network piece up and running. After setting these per the specific unit set the ***NETWORK CHKLIST*** point to done.

SYSTEM AUTO TEST

Turning this to Start will run enable test mode and execute the System Auto Test. After the auto test has completed, set this to done.

Table 3 — Quick Setup Menu Items

SYSTEMVU DISPLAY	EXPANDED NAME	RANGE	DEFAULT
QUICK SETUP CONFIG	QUICK SETUP CONFIG MENU		
DATE	Current Date	MM/DD/YYYY	
TIME	Clock Hour and Minute	HH:MM	
STARTUP DELAY	Unit Startup Delay	10 to 600	30
UNIT CONTROL TYPE	Unit Control Type	0=TSTAT, 1=SPACE SEN, 2=RAT SEN	0
THERMOSTAT TYPE	Thermostat Hardware Type	0=CONV 2C2H, 1=DIGI 2C2H, 2=CONV 3C2H, 3=DIGI 3C2H	2
DIRTY FILTER TIME	Change Filter Timer	0 to 9999	0
TIME BTWN DEFROST	Min Time BTWN Defrosts	30 to 120	60
HEATING STAG QTY	Number of Heating Stages	1 to 3	1[a]

Table 3 — Quick Setup Menu Items (cont)

SYSTEMVU DISPLAY	EXPANDED NAME	RANGE	DEFAULT
VENT METHOD	Ventilation Method	0=NONE 1=ECON 2=2POS DMPR 3=ERV 4=ECON ERV	0[a]
FREECOOL MAX OAT	Free Cooling Max OAT	0 to 90	65
FIRE SW CHANNEL	Fire Switch Channel	0 =None, 1=MBB DI12, 2=MBB DI13, 3=MBB DI14, 4=MBB DI02, 5=MBB DI03, 6=MBB Y3	0[a]=None,
IDF HIGH COOL SPD	IDF High Cool Speed-RPM	0 to 3000	2000[a]
IDF VENT SPD	IDF Vent Speed-RPM	0 to 3000	1300[a]
IDF HEAT SPD	IDF Heat Speed-RPM	0 to 3000	2100[a]
QUICK SET CHKLIST	QUICK SETUP CHECKLIST	0=Undone, 1=View, 2=Done	0

NOTE(S):

a. These defaults change based on the Unit model number.

Thermostat Control

Wire accessory thermostat to the corresponding R, Y1, Y2, W1, W2, and G terminals on the Main Base board.

The Unit Control Type configuration, (***UNIT CONTROL TYPE***) default value is for thermostat (0) so there is no need to configure this item.

The Thermostat Hardware Type (***THERMOSTAT TYPE***) selects the unit response to the thermostat inputs above.

NOTE: May not be compatible with heat anticipator thermostats.

Space Temperature Sensor Control - Direct Wired (T-55 or T-56 or T-59)

Wire accessory space temperature sensor(s) to the T-55 terminals on the field connection terminal board located at the unit control box. Refer to "Space Mounted Sensors" section on page 66 for additional information.

The Unit Control Type configuration, (***UNIT CONTROL TYPE***) must be set to Space Sensor (1).

CCN Communication

First configure the building protocol ***SETTINGS → NETWORK SETTINGS → BAS PROTOCOL*** to CCN (default is 0 = NONE). Configure the following under the CCN menu (***SETTINGS → NETWORK SETTINGS → CCN***).

CCN ELEMENT # - Default is 1

BUS NUMBER - Default is 0

CCN BAUDRATE - Default is 2 = 38400

CCN LINKAGE CONTROL

The CCN communication must be properly configured for the units and all other devices. Linkage configuration is automatically done by the supervisory CCN Linkage device.

The unit control type configuration, (***UNIT CONTROL TYPE***) must be set to space sensor (1).

The factory location of the SAT sensor will read accurately for heating and cooling for proper operation with linkage applications, therefore the SAT heating mode sensing configuration (***SAT DURING HEAT?***) is enabled from the factory. If a more accurate SAT reading is need, the sensor can be re-located into the duct and no configuration adjustment needed.

BACnet Communication

First configure the building protocol ***SETTINGS → NETWORK SETTINGS → BAS PROTOCOL*** to BACNET (default is 0 = NONE).

Configure the following under the BACNET menu ***(SETTINGS → NETWORK SETTINGS → BACNET)***.

MAC ADDRESS — Default is 1

BUS NUMBER — Default is 0

BACNET BAUDRATE — Default is 4 = 76800

SYSTEM TOUCH DEVICE

The System Touch™ device connects to a BACnet communication bus, so the building protocol must be set to BACNET. ***(SETTINGS → NETWORK SETTINGS → BAS PROTOCOL)***. The following settings must be set in the System Touch menu. ***(SETTINGS → NETWORK SETTINGS → BACNET → SYSTEM TOUCH)***:

DEVICE INSTANCE – The default is 160099 and must be set to that of the job specific System Touch device.

POLLING RATE – The default is 0 to prevent scanning. This must be set to at least 10 to allow communication with the System Touch device.

RNET Communication Space Sensors

The SystemVu controller will support the use of ZS sensors and Equipment Touch™ device on the RNET communication bus connections J20 and J24. Set the ***UNIT CONTROL TYPE*** configuration to space sensor to enable unit control with these sensors. RNET communication can only be enabled or disabled through BACnet communication and is defaulted to enabled.

Field-Installed Accessories

Below are quick configuration settings for field-installed accessories. When factory-installed as options the points will already be configured. See the section "Space Mounted Sensors" on page 66, third party control, control connection tables, and CCN or Display parameter tables for any accessories not mentioned below and refer to installation manual of the accessory.

ECONOMIZER

When an economizer is field-installed, the unit must be configured for it by setting ***SETTINGS → UNIT CONFIGURATIONS → ECONOMIZER → VENT METHOD*** to ECON. The default settings for the other economizer configurations should be satisfactory. If they need to be changed, additional information about these configuration settings can be found in the Economizer section.

POWER EXHAUST

When power exhaust is field-installed, the unit must be configured for it by setting ***SETTINGS → UNIT CONFIGURATIONS → ECONOMIZER → POWER EXHAUST CONFIGS → PE1 RELAY CHANNEL*** to the channel the accessory was wired into. The default settings for the other power exhaust configurations should be satisfactory. If they need to be changed, additional information about these configurations can be found in the Power Exhaust section.

ELECTRIC HEAT

When electric heat is field-installed, the number of electric heat stages must be configured by setting ***SETTINGS → UNIT CONFIGURATIONS → HEATING → HEATING STAGE QTY*** per the installed heater.

FIRE SHUTDOWN

When Fire Shutdown or Smoke Detector sensors are field-installed, the unit must be configured for it by setting ***SETTINGS → UNIT CONFIGURATIONS → SWITCH INPUTS CONFIGS → FIRE SW CHANNEL*** to the channel number the switch was wired into.

OUTDOOR ENTHALPY

When an Outdoor Enthalpy sensor is field-installed, the unit must be configured for it by setting ***SETTINGS → UNIT CONFIGURATIONS → ANALOG INPUTS CONFIGS → OARH SENSOR CHAN*** to the channel number the sensor was wired into.

RETURN ENTHALPY

When a Return Enthalpy sensor is field-installed, the unit must be configured for it by setting ***SETTINGS → UNIT CONFIGURATIONS → ANALOG INPUTS CONFIGS → RARH SENSOR CHAN*** to the channel number the sensor was wired into.

When wiring the sensor refer to the unit wiring diagram. The typical sensor is a loop powered sensor that requires 24vdc, which the factory has provided an Orange wire for in the return air section. The actual sensor input wire is a yellow wire in the return air section of the unit pre-run by the factory from TB5.

SPACE HUMIDITY SENSOR

When a Space Relative Humidity (SPRH) sensor is field-installed, the unit must be configured for it by setting ***SETTINGS → UNIT CONFIGURATIONS → ANALOG INPUTS CONFIGS → SPRH SENSOR CHAN*** to the channel number the sensor was wired into.

When wiring the sensor refer to the unit wiring diagram. The typical sensor is a loop powered sensor that requires 24vdc, which is located on TB5. To connect the input sensor wire into TB5-5, the pre-run Yellow wire from the factory must be removed and taped off.

IAQ SENSOR

When a CO_2 sensor is field-installed, the unit must be configured for it by setting ***SETTINGS → UNIT CONFIGURATIONS → ANALOG INPUT CONFIGS → IAQ SENSOR CHAN*** selects the unit response to this input. Default conversion to 0 to 2000 ppm.

OAQ SENSOR

When an Outdoor Air Quality sensor is field-installed, the unit must be configured for it by setting ***SETTINGS → UNIT CONFIGURATIONS → ANALOG INPUT CONFIGS → OAQ SENSOR CHAN***. Default conversion to 0 to 2000 ppm.

FILTER STATUS

When a Filter Status Switch is field-installed, the unit must be configured by setting the input channel it is wired to and normal state. ***SETTINGS → UNIT CONFIGURATIONS → SWITCH INPUT CONFIGS → FILTER SW CHANNEL*** and ***FILTER SW TYPE***.

PHASE MONITOR

When a phase monitor is field-installed, the unit must be configured by setting the input channel it is wired to and normal state ***SETTING → UNIT CONFIGURATIONS → SWITCH INPUTS CONFIGS → PHASE MON CHANNEL*** and ***PHASE MON SW TYPE***.

TWO POSITION DAMPER

When a Two Position damper is field-installed, the unit must be configured by setting the output channel it is wired to. ***SETTINGS → UNIT CONFIGURATION → GENERAL → 2POS/ERV CHANNEL***.

LOW AMBIENT

When low ambient option is field-installed, the unit must be configured by setting ***SETTINGS → UNIT CONFIGURATIONS → COOLING → LOW AMBIENT → CIR.A LOCKOUT OAT*** to 0.

Programming Operating Schedules

When the building automation system you have the SystemVu controller configured for (***BAS PROTOCOL SELECT***) is None (0) or CCN (1) the SystemVu controller can follow a standard CCN occupancy table. The occupancy can be modified from any CCN tool or from the local display.

OCCUPANCY SCHEDULE

For flexibility of scheduling, the occupancy programming is broken into eight separate periods. For each period the schedule contains the following fields: Day of Week, Occupied From, and Occupied To.

DAY OF WEEK

The day of week configuration consists of eight fields corresponding to the seven days of the week and a holiday field in the following order: Monday, Tuesday, Wednesday, Thursday, Friday, Saturday, Sunday, and Holiday. If a 1 is configured in the corresponding place for a certain day of the week, the related "Occupied from" and "Occupied to" times for that period will take effect on that day of the week. If a 1 is placed in the holiday field, the related times will take effect on a day configured as a holiday. A zero means the schedule period will not apply to that day.

Day of week: Range 0 or 1

Default Values 0 for all of the periods.

OCCUPIED FROM

This field is used to configure the hour and minute, in 24 hour clock, that the mode for the controller will switch to occupied.

Occupied From: Units Hours:Minutes

Range 00:00 to 24:00

(Minutes 00 to 59)

Default Value 00:00

OCCUPIED TO

This field is used to configure the hour and minute, in 24 hour clock, that the mode for the controller switches from occupied to unoccupied.

Occupied To: Units Hours:Minutes

Range 00:00 to 24:00

(Minutes 00 to 59)

Default Value 00:00

When the building automation system configured to (***BAS PROTOCOL***) is BACnet, the occupancy and holiday information will be reset to defaults in preparation for receiving a BACnet occupancy object. While participating on a BACnet network these configurations cannot be changed at the local interface or with CCN tools. All scheduling is done from the BACnet interface designated to provide schedules.

SERVICE TEST

The Service Test function can be used to verify proper operation of compressors, heating stages, indoor fan, outdoor fans, power exhaust fans, economizer, crankcase heaters, and the alarm relay. Use of Service Test is recommended at initial system start up and during troubleshooting. (See Table 4 for point details.)

Service Test mode has the following changes from normal operation:

- Outdoor air temperature limits for cooling circuits, economizer, and heating are ignored.
- Normal compressor time guards and other staging delays are reduced to one minute or less.
- Circuit strike out time is reduced to 1 minute instead of 15 minutes.
- It may take up to 30 seconds to actually enter test mode after activating the command.

Press the TEST button on the SystemVu interface anytime to access the Test menu. Service Test mode can only be turned ON/OFF at the unit display. Once turned ON, other entries may be made with the display or through CCN. To turn Service Test mode on, change the value of ***TEST MODE*** to ON. To turn service test mode off, change the value of ***TEST MODE*** to OFF. Service Test mode will be automatically turned off based on keypad inactivity and the Service Mode Test Time out (***TEST MODE TIM OUT***).

Test mode covers a variety of units with all test points visible at all times. Some tests may be prevented when not applicable for the specific unit as configured. Refer to the operations sections of this manual for details on the functions which make test cases applicable or not.

NOTE: Service Test mode may be password protected. Refer to "BASIC CONTROL USAGE" on page 4 for more information. Depending on the unit model, factory-installed options, and field-installed accessories, some of the Service Test functions may not apply.

Table 4 — Test Mode Unit Test Directory

DISPLY MENU/SUB MENU/NAME	EXPANDED NAME	VALUES
UNIT TESTS	Unit Tests Menu	
TEST MODE	Service Test Mode Enable	Off/On
SERVICE TEST	Service Test Menu	
INDEPENDENTS	INDEPENDENT TEST MENU	
ECON POS TEST	Economizer Position Test	0 to 100
BUMP COMP A1 TEST	Compressor Bump A1 Test	Off/On
BUMP COMP A2 TEST	Compressor Bump A2 Test	Off/On
REV VALVE SOL TST	Rev.Val. Sole. Cir.A Tst	Off/On
LLSV RELAY TEST	LiqLine Solenoid Test	Off/On
CCH RELAY 1 TEST	Crankcase Heater 1 test	Off/On
ALARM RELAY TEST	Alarm Output Relay Test	Off/On
PE1 RELAY TEST	Power Exhaust 1 Test	Off/On
PE2 RELAY TEST	Power Exhaust 2 Test	Off/On
2POS/ERV RLY TEST	2Position/ERV Relay Test	Off/On
DAMPER CALIBRATION	Damper Calibration Menu	
CALIBRATE DAMPER	Econ Damper Calibration	Off/On
FAN TESTS	Indoor and Outdoor Fan tests	
IDF SPEED TEST	Indoor Fan Speed Test	0 to 100
CONVERTED IDF RPM	Converted IDF Speed	XXXX
IDF MANUAL TRANS	IDF Manual Transition	Yes/No
ODF ON/OFF TEST	ODF On/Off Relay Test	Off/On
ODF RELAY TEST	ODF Speed Relay Test	Off/On
ODF RELAY2 TEST	ODF Relay2 Test	Off/On
ODF RELAY3 TEST	ODF Relay3 Test	Off/On
COOL	Cooling Status Menu	
COOL A1 TEST	Cooling W/Comp.A1 Test	Off/On
COOL A2 TEST	Cooling W/Comp.A2 Test	Off/On
CIR A LOADER TEST	Cooling W/Comp.ALD Test	Off/On
IDF SPEED TEST	Indoor Fan Speed Test	0 to 100
ODF ON/OFF TEST	ODF On/Off Relay Test	Off/On
ODF RELAY TEST	ODF Relay Test	Off/On
ODF RELAY2 TEST	ODF Relay2 Test	Off/On
ODF RELAY3 TEST	ODF Relay3 Test	Off/On
HEAT	Heating Status Menu	
MECH HEAT TEST	Mechanical Heating Test	Off/On
HEAT 1 TEST	Heating Stage 1 Test	Off/On
HEAT 2 TEST	Heating Stage 2 Test	Off/On
IDF SPEED TEST	Indoor Fan Speed Test	0 to 100
DEFROST TEST	Defrost Test	Off/On
AUTOMATIC TEST	Automatic Test Menu	
AUTO INDP TEST	AUTO INDEPENDENT TEST	Yes/No
AUTO COOL TEST	RUN AUTO COOLING TEST	Yes/No
AUTO HEAT TEST	RUN AUTO HEATING TEST	Yes/No
AUTO SYSTEM TEST	RUN AUTO SYSTEM TEST	Yes/No

Independent Outputs

The ***INDEPENDENTS*** submenu is used to change output status for the economizer, power exhaust stages, crankcase heaters, the alarm relay, as well as perform a compressor bump test. These independent outputs can operate simultaneously with other Service Test modes. All outputs return to normal operation when Service Test is turned off. The compressor bump tests cannot be run while running cooling tests and will automatically turn off after one minute.

Fan Test

The ***FAN TESTS*** submenu is used to setup or test speeds for the indoor fan. Use the ***IDF SPEED TEST*** point to control the indoor fan speed in terms of %, and use the ***CONVERTED IDF RPM*** point as feedback to help set the fan speed settings in terms of RPM. The indoor fan transition type point inform the test routine how to handle the fans while running the cooling or heating tests. Automatic will automatically transition the fans as the cooling or heating tests change. While the Manual transition will only run the fans as set by the test points.

Cooling Test

The ***COOL*** submenu is used to test mechanical heat, defrost, and change output status for the individual compressors operation. The ***HEAT*** submenu service test outputs are reset to OFF for the cooling service test. Indoor fans and outdoor fans are controlled normally to maintain proper unit operation when set for automatic transition. The ***IDF SPEED TEST*** can be changed as needed for testing. These fans points show the requested speed not actual speed. All normal cooling faults and alerts are functional.

Heating Test

The ***HEAT*** submenu is used to test mechanical heat, defrost, and test the individual heat stages. The ***COOL*** service test outputs are reset to OFF for the heating service test. Indoor fan and outdoor fan are controlled normally to maintain proper unit operation when set for automatic transition. The ***IDF SPEED TEST*** can be changed as needed for testing and shows the requested speed not actual speed. All normal heating faults and alerts are functional.

Automatic Test

The ***AUTOMATIC TEST*** submenu is used to execute all the applicable tests to the system automatically. These include independent components, cooling, heating, and system. Table 5 shows the steps taken during the independent, cooling, and heating automatic tests. The Hold time represents the time at which that control waits before moving on to the next step.

The ***AUTO SYSTEM TEST*** will execute the independent auto test, then the cooling auto test, then the heating auto test. At the end of the system auto test a prompt will ask if you want to enter measured data and complete a service report.

NOTE: If an auto test step is not applicable to the specific unit's configurations it will be skipped.

Table 5 — Independent, Cooling, and Heating Automatic Tests

AUTO INDP TEST		
Step	**Action**	**Hold (Sec)**
1	Turn on Crankcase Heater Relay	0
2	Turn on Outdoor Fan	20
3	Switch to High Speed Outdoor Fan	20
4	Turn off Outdoor Fan	10
5	Set IDF speed to 100%	30
6	Turn on 2 position damper/ERV relay	30
7	Set Economizer Damper to 100%	60
8	Turn on power exhaust 1	10
9	Turn on power exhaust 2	10
10	Set Economizer Damper to 0%	60
11	Turn off power exhaust 2	10
12	Turn off power exhaust 1	10
13	Set IDF to the ventilation speed	30
14	Turn off 2 position damper/ERV relay	0
15	Turn on alarm relay	10
16	Turn off alarm relay	10
17	Set IDF to 0% speed	30
18	Turn on Reversing Valve	10
19	Turn off Reversing Valve	10
20	Turn on Liquid Line Solenoid Valve	10
21	Turn off Liquid Line Solenoid Valve	10
22	Turn off Crankcase Heater relay	0
AUTO COOL TEST		
Step	**Action**	**Hold (Sec)**
1	Set IDF auto transition	0
2	Turn on Cool A1 test	60
3	Turn on Cool A2 test	60
4	Turn on Compressor Loader test	30
5	Turn off ODF Relay test	10
6	Turn off Compressor Loader test	60
7	Turn off Cool A2 test	30
8	Turn off Cool A1 test	30
AUTO HEAT TEST		
Step	**Action**	**Hold (Sec)**
1	Set IDF auto transition	0
2	Turn on Mechanical Heat	60
3	Switch to Defrost Mode	30
4	Switch to Mechanical Heat	30
5	Turn off Mechanical Heat	10
6	Turn on Heat 1 test	60
7	Turn on Heat 2 test	60
8	Turn off Heat 1 and Heat 2 tests	20

THIRD PARTY CONTROL

Third party controls may interface with the unit SystemVu controller through the connections described below. See other sections of these instructions for more information on the related unit control and configurations.

Cooling/Heating Control

The thermostat inputs are provided on TB1 of the board. The Unit Control Type configuration, ***UNIT CONTROL TYPE***, must be 0 (Tstat) to recognize the below inputs. Terminal R is the 24-VAC source for the following:

Y1 = first stage cooling

Y2 = second stage cooling

W1 = first stage heating

W2 = second stage heating

G = Indoor fan

Remote Occupancy

The remote occupancy input can be provided on one of the configurable inputs, most commonly TB3. The Remote Occupancy Switch configuration, ***REMOTE OCC TYPE***, identifies the normally open or normally closed status of this input when unoccupied. The Remote Occupancy Channel configuration, ***REMOTE OCC CHAN***, identifies the discrete input (DI) assigned for this function.

Remote Shutdown

The remote shutdown input is provided for unit shutdown in response to switch input configured most commonly on TB3. The Remote Shutdown Switch configuration, ***REM. SHUTDOWN TYPE***, identifies the normally open or normally closed status of this input when there is no shutdown command. The Remote Shutdown Channel configuration, ***REM. SHUTDOWN CHAN***, identifies the discrete input (DI) assigned for this function.

Alarm Output

The alarm output is provided on as a configurable relay, most commonly on TB2, to indicate when a current alarm is active. The output will be 24-VAC if a current alarm exists. The Alarm Relay Channel configuration, ***ALM RELY CHANNEL***, identifies the discrete output (DO) assigned for this function.

Economizer Damper Control

For units with the economizer option or accessory, the damper position can be directly controlled through the IAQ sensor input. The IAQ Analog Input configuration, ***IAQ LEVEL CONTROL*** will have to set to 2 (***CTL MINP***). When ***IA.CF*** = 2, an external 4 to 20 mA source is used to move the damper 0% to 100% directly.

CONTROLS OPERATION

Display Configuration

The ***SETTINGS → DISPLAY SETTINGS*** submenu is used to configure the local display settings.

METRIC DISPLAY

This variable is used to change the display from English units to Metric units.

LANGUAGE

This variable is used to change the language of the SystemVu display.

CONTRAST ADJUST

This is used to adjust the contrast of the SystemVu display.

PASSWORD ENABLE?

This variable enables or disables the use of a user password. The password is used to restrict use of the control to change configurations.

VIEW USER PASSWORD

This menu allows the user to view the user password. The password must be entered or disabled to view it.

CHANGE USER PASSWORD

This menu allows the user to change the user password. The password must be entered or disabled to change it.

Unit Configuration

Many configurations that indicate what factory options and/or field accessories are installed and other common operation variables are included in ***SETTINGS → UNIT CONFIGURATION*** submenu. Some of these configurations will be set in the factory for the factory-installed options (FIOPs). Field installed accessories and custom control functions will require configuration changes. The ***SETTINGS → UNIT CONFIGURATION → GENERAL*** submenu contains the following control configurations. Refer to other specific sections for other configurations.

STARTUP DELAY

This configuration sets the control start-up delay after the power is interrupted. This can be used to stagger the start-up of multiple units.

UNIT CONTROL TYPE

This configuration defines if temperature control is based on thermostat inputs or space temperature sensor input. TSTAT value is when then unit determines cooling and heating demand by the state of G, Y1, Y2, W1, and W2 inputs from a space thermostat. This value is the factory default. SPACE SEN value is when the unit determines cooling and heating demand based on the space temperature and the appropriate set point. RAT SEN value is when the unit determines cooling and heating demand based on the return air temperature and the appropriate set point. SPACE SEN or RAT SEN are also used as Linkage configuration.

THERMOSTAT TYPE

This configuration applies only if Unit Control Type is Thermostat. The value determines how the inputs are interpreted. See the specific operation sections for more information. The following descriptions define what each value means.

0 = ***CONV 2C2H*** — Conventional Thermostat 2 stage cool and 2 stage heat.

1 = ***DIGI 2C2H*** — Digital Thermostat 2 stage cool and 2 stage heat.

2 = ***CONV 3C2H*** — Conventional Thermostat 3 stage cool and 2 stage heat. This is the default setting.

3 = ***DIGI 3C2H*** — Digital Thermostat 3 stage cool and 2 stage heat.

ADAPTIVE TSTAT

This configuration applies only if the Unit control type is Thermostat. When this is YES the control will use Adaptive Control for cooling and heating staging.When this is set to NO the control will use the Traditional Thermostat Control, however during integrated cooling Adaptive is always used.

DIRTY FILTER TIME

This configuration defines the life of the installed filter. A timer will count down from this number while the indoor fan is running. At the expiration of this timer, an alert will be activated to indicate a filter change is required.

TEST MODE TIMEOUT

This configuration defines the time at which a test mode test has not changed state will automatically disable test mode. This configuration will disable the timeout when set to 0 (Disabled).

CCH MAX TEMP

This configuration defines the temperature threshold for which the crankcase heater is no longer required to heat the compressor shell.

STD BARO PRESSURE

This configuration is used to specify the job location's standard barometer pressure reading. This will feed the ***BAROMETRIC PRESS*** when a network is not writing to it. This should be used to account for job site elevation if enthalpy calculations are being used.

LINK STAGEUP TIME

This configuration sets the cooling and heating stage up time during linkage operation.

UNIT'S MAX SAT

This setting is used to trigger the F412 — Run Away Heat Fault. Any time the unit supply air temperature is higher than this value the alarm will be generated and shutdown the unit. Default is 200°F (93°C).

UNIT'S MIN SAT

This setting is used to trigger the F202 — Freeze Protection Fault. Any time the unit supply air temperature falls below this value the alarm will be generated and shutdown the unit. Default is 32°F (0°C).

AUTO SAT FAULTS?

This setting allows the user to select whether the F202 — Freeze Protection Fault and F412 — Run Away Heat Fault can automatically reset with improved supply air temperatures, or if the unit remains in shutdown until the unit can be manually reset. Default is Yes to allow auto reset.

SA FREEZE PROTECT

This setting allows the F202 — Freeze Protection Fault to be disabled if the function is not desired. The fault will not activate, and unit will continue to run with extreme low supply air temperatures. Default is enabled to allow the function.

Configurable Switches and Analog Sensors

The SystemVu controller has optional configurable inputs. These consist of six physical board switch inputs (discrete inputs) and three physical board analog inputs. There are more functions allowed for configuration than there are inputs. Each function will have a configuration for which input channel it is assigned to. Each switch function will also have a switch type configuration which defines that switches normal state. Table 6 shows the configurable switch input functions and what their normal and active states are. Table 7 shows the configurable analog input functions. The switch configurations can be found in the ***SETTINGS → UNIT CONFIGURATIONS → SWITCH INPUT CONFIGS*** sub-menu. The analog input configurations can be found in the ***SETTINGS → UNIT CONFIGURATIONS → SWITCH INPUT CONFIGS*** sub-menu. The configurable input assignment can be viewed in the ***SERVICE → HARDWARE → ASSIGNED INPUTS/OUTPUTS*** sub-menu.

Table 6 — Configurable Switch Input Function

FUNCTION DESCRIPTION	NORMAL STATE	ACTIVE STATE
Humidistat	OFF	ON
Fire Shutdown	NORMAL	ALARM
Condensate Overflow	LOW	HIGH
Filter Status Switch	CLEAN	DIRTY
Remote Occupancy	UNOCC	OCCUPIED
Remote Shutdown	RUN	SHUTDOWN
General Status Switch	GOOD	ALARM
Enthalpy Switch Input	LOW	HIGH
Fan Status Switch Input	OFF	ON
Indoor Air Quality Override	NO	YES
Phase Monitor Switch Input	NORMAL	ALARM
Smoke Purge	OFF	ON
Smoke Pressurization	OFF	ON
Smoke Evacuation	OFF	ON

Table 7 — Configurable Analog Input Functions

FUNCTION DESCRIPTION	SENSOR TYPE	SENSOR VALUES
Space Relative Humidity Sensor	0-20mA	%RH
Outside Air Relative Humidity Sensor	0-20mA	%RH
Return Air Relative Humidity Sensor	0-20mA	%RH
Indoor Air CO_2 Sensor	0-20mA	PPM
Outside Air CO_2 Sensor	0-20mA	PPM
Outdoor CFM Sensor	0-20mA	CFM

Any of the Switch input functions can be configured and wired for use on any of the discrete input channels, see Table 8. Any of the analog sensor functions can be configured and wired for use in any of the analog input channels, see Table 9.

Table 8 — Configurable Discrete Input Channels

CHANNEL NAME	BOARD CONNECTION	WIRE LOCATION
MBB DI12	MBB TB3-2	Included Connector on Board
MBB DI13	MBB TB3-4	Included Connector on Board
MBB DI14	MBB TB3-6	Included Connector on Board
MBB DI02	MBB J4-2	Special Connector on Board
MBB DI03	MBB J5-2	Special Connector on Board
MBB Y3	MBB TB1 – Y3	Screw Terminal

Table 9 — Configurable Analog Input Channels

CHANNEL NAME	BOARD CONNECTION	WIRE LOCATION
MBB AI06	MBB TB5-5	Included Connector on Board
MBB AI07	MBB J7-1	Pink Wire in return air section
MBB AI08	MBB J7-2	Gray Wire in return air section

General Operation

50FEQ and 50GEQ units can provide cooling, dehumidification, heating, and ventilation. The operating mode (MODE) shows the highest level of operation of the unit at any given time. The operating sub-mode (SUB-MODE) shows the detail operation occurring while under a specific mode. Figure 9 shows the MODE and SUB-MODE values.

Each unit will operate under one of three basic types of control, thermostat, space temperature sensor, or return air temperature sensor. There are many inputs, configurations, safety factors, and conditions that ultimately control the unit. Refer to the specific operation sections for detail on a specific unit operation. The control will set the demand based on these types of control and conditions, which then drives the operating mode.

When thermostat control is enabled (***UNIT CONTROL TYPE***), the unit will operate based on discrete input commands (G, Y1, Y2, W1, and W2) and there is a one minute time delay between modes and when re-entering a mode. The G command calls for ventilation, the Y1 and Y2 commands call for cooling, and the W1 and W2 commands call for heating. Thermostat Control Type (***THERMOSTAT TYPE***) affects how cooling operates based on Y1 and Y2 commands and if cooling/heating stage time guards are applied.

MODE	OFF	VENT	COOL	HEAT	TEST
SUB-MODE	STARTING UP	MODE TIMEGUARD	ECON FREE COOLING	HEATING	MANUAL TEST
	IDLE - NO DEMAND	SUPPLY FAN ON	UNOCC. FREE COOL	DEFROST	AUTO TEST
	MODE TIMEGUARD		MECH. COOLING	SA TEMPERING	SHUTTING TEST OFF
	UNIT DISABLED		ECON/MECH COOLING	HEATING PREVENTED	
	URGENT SHUTDOWN		DEHUMIDIFICATION	SHUTTING HEAT OFF	
	SAFETY CONTROL		DEHUM/MECH COOL		
			DEHUM PREVENTED		
			COOLING PREVENTED		
			SHUTTING COOL OFF		

Fig. 9 — Modes and Sub-Modes

Demand Determination

Based on the unit control type (***UNIT CONTROL TYPE***), alarm conditions, and user interaction, the control will determine an overall demand of the unit. Table 10 shows the possible system demands with their priority level and summary description.

THERMOSTAT DEMAND

When the unit control type is configured for thermostat (***UNIT CONTROL TYPE*** = ***TSTAT***) the level 6 demand in Table 10 will be determined by thermostat inputs and the Thermostat Type configuration (***THERMOSTAT TYPE***) as shown in the tables below. Table 11 shows the cooling thermostat inputs and how they map to the system demand. Table 12 shows the heating thermostat inputs and how they map to the system demand.

SPACE SENSOR DEMAND

When the unit control type is configured for space sensor (***UNIT CONTROL TYPE*** = ***SPACE SEN***) the level 5 demand in Table 8 will be determined by the space sensor inputs and setpoints as described below. The Effective Demand Temperature (***DEMAND CTRL TEMP***) represents the temperature which the control is using to control the space. This would come from the space sensor, building network, linkage, or the return air sensor.

Setpoint Determination

Setpoints are used to control the unit. The Cool Setpoint in Effect (***EFF COOL SETPOINT***) and the Heat Setpoint in Effect (***EFF HEAT SETPOINT***) are the points in which the unit is controlling to at a specific time. These points are read only points and change according to occupancy, the offset slider status, and network writes. The setpoint configurations are in the ***SETTINGS → SPACE SET POINTS*** submenu.

If the building is in occupied mode, the Occupied Cool Setpoint (***OCC COOL SETPOINT***) and the Occupied Heat Setpoint (***OCC HEAT SETPOINT***) are active. When the building is in unoccupied mode, the Unoccupied Cool Setpoint (***UNOCC COOL SETPNT***) and the Unoccupied Heat Setpoint (***UNOCC HEAT SETPNT***) are active. The heating and cooling set points are also separated by a Heat-Cool Set Point Gap (***HEAT-COOL SP GAP***) that is user configurable from 2 to 10 degrees F. This parameter will not allow the setpoints to be set too close together, it will change the last setpoint adjusted if it is set within the GAP.

When the space sensor has a setpoint slider adjustment, the cool and heat setpoints (occupied) can be offset by sliding the bar from one side to the other. The SPT Offset Range (+/-) (***SPT SLIDER RANGE***) sets the total positive or negative degrees that can be added to the setpoints. With the slider in the middle, no offset is applied. Moving the slider to the "COOL" side will subtract from each setpoint, and sliding it to the "WARM" side will add to the setpoints. The slider offset being applied at any given time is displayed as Space Temperature Offset (***SLIDER OFFSET VAL***).

Table 10 — Demand List and Priority

DEMAND	PRIORITY	DESCRIPTION
EMERGENCY	1	An emergency condition occurs which requires a unit shutdown
SMOKE CONTROL	2	A smoke input or building command is operating the unit.
SAFETY FAULT	3	A safety diagnostic requires the unit to run in safety mode.
SERVICE TEST	4	User request test mode
SHUTDOWN	5	A minor or user condition requires the unit to shutdown
NO DEMAND	6	There is no comfort demand from the building
FAN ONLY		Only circulation or ventilation is requested form the building
DEHUM		A dehumidification load is present in the building
LOW COOL		A low cooling load is present in the building
HIGH COOL		A high cooling load is present in the building
LOW COOL & DEHUM		A low cooling and dehumidification load is present in the building
HIGH COOL & DEHUM		A high cooling and dehumidification load is present in the building
UFC LOW COOL		A low cooling load is present in the building due to the unoccupied free cooling algorithm
UFC HIGH COOL		A high cooling load is present in the building due to the unoccupied free cooling algorithm
LOW HEAT		A low heating load is present in the building
HIGH HEAT		A high heating load is present in the building
SUPPLY AIR TEMPERING		Due to outside air, supply air is uncomfortably cool during ventilation

Table 11 — Thermostat Cooling System Demands

THERMOSTAT INPUTS		THERMOSTAT TYPE			
Y1	**Y2**	**CONV 2C2H[a]**	**CONV 3C2H**	**DIGI 2C2H**	**DIGI 3C2H**
0	**0**	No Cool	No Cool	No Cool	No Cool
0	**1**	Alert & Low Cool	Alert & Low Cool	High Cool	High Cool
1	**0**	Low Cool	Low Cool	Low Cool	Low Cool
1	**1**	High Cool	High Cool	High Cool	High Cool

NOTE(S):

a. Set the LOW COOL COMP as needed.

Table 12 — Thermostat Heating System Demands

THERMOSTAT INPUT		THERMOSTAT TYPE	
W1	W2	CONV 2C2H CONV 3C2H	DIGI 2C2H DIGI 3C2H
0	0	No Heat	No Heat
0	1	Alert & Low Heat	High Heat
1	0	Low Heat	Low Heat
1	1	High Heat	High Heat

Temperature Demand

Space sensor staging control is an adaptive anticipation control that weighs the actual space demand against the trend of that demand. The control tries to anticipate the change in the space because of its current stage status. This anticipation is based on the demand trends. These trends will show the control how the space is reacting to the current running conditions and help it decide when to change the actual demand of the system. The following points are in the ***RUN STATUS → MODE*** submenu:

COOLING DEMAND

This is the difference between the Cool Setpoint in Effect (***EFF COOL SETPOINT***) and the Effective Demand Temperature (***DEMAND CTRL TEMP***) representing the demand of the space for cooling.

COOL DEMAND TREND

This is the rate of change of the cooling demand in degrees per minute, representing how the space is changing its demand for cooling.

HEATING DEMAND

This is the difference between the Heat Setpoint in Effect (***EFF HEAT SETPOINT***) and the Effective Demand Temperature (***DEMAND CTRL TEMP***) representing the demand of the space for cooling.

HEAT DEMAND TREND

This is the rate of change of the heating demand in degrees per minute, representing how the space is changing its demand for cooling.

In general the system demand will increase based on the demand compared to the demand switch states in Fig. 10. The demand cannot increase until Time guard 1 (***DEMAND TIMEGUARD1***) expires. The ***LCON*** and ***LHON*** thresholds will also cause the system demand to be reduced.When the demand hits the off switch stages the system demand will be set to NO DEMAND. These switch stages are in the ***SETTINGS → SET POINTS → TEMP DEMAND CONFIG*** submenu.

The cooling and heating demand level up configurations (***COOL DMD LEVEL UP*** and ***HEAT DMD LEVEL UP***) will restrict a system demand increase if the demand trend is less than the level up configuration. These level up configurations will also increase the system demand if the demand trend is greater than it for greater than the Time guard 2 (***DEMAND TIMEGUARD2***).

The system demand will increase if it has remained at the same state for greater than Time Guard 3 (***DEMAND TIMEGUARD3***).

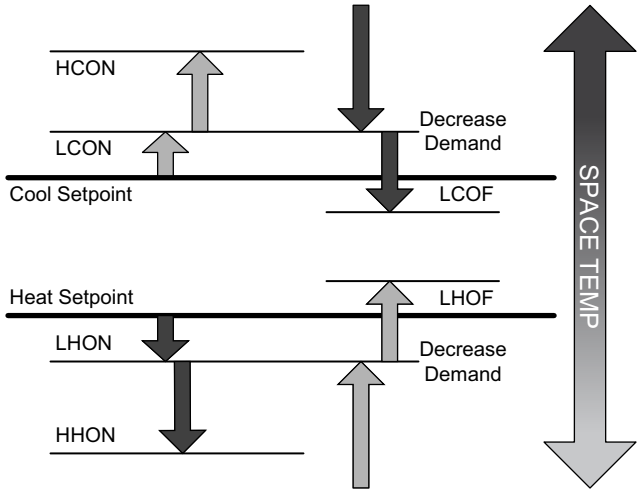

Fig. 10 — Space Sensor System Demand Switch States

RAT DEMAND

When the unit control type is configured for return air sensor (***UNIT CONTROL TYPE*** = ***RAT SEN***) the level 5 demand in Table 10 will be determined the same as space sensor but using the return air temperature (***RETURN AIR TEMP***) instead of the space temperature (***SPACE TEMPERATURE***).

HUMIDITY DEMAND

When the unit is configured for Space Humidity Sensor (***SPRH SENS CHANNEL***) the level 5 demand in Table 10 will include a determination of dehumidification demand.

SPACE RELATIVE HUMIDITY

On units with a relative humidity sensor, when the received value of space relative humidity (***SPRH LEVEL***) has exceed the humidity set point (***SPRH SETPOINT***), dehumidification will be demanded. This demand will remain until the space relative humidity has fallen below the humidity set point by more than the humidity set point deadband (***SPRH DEADBAND***). This would come from the space humidity sensor, or building network.

Occupancy Determination

The building's occupancy is affected by a number of different factors. Occupancy affects the unit set points and the operation of the economizer. The factors affecting occupancy are listed below from highest to lowest priority.

LEVEL 1 PRIORITY

Level 1 classification is a force/write to occupancy and can occur two ways. Listed in order of priority: force on OCCUPIED, and a Linkage write. The CCN point OCCUPIED is forced via an external device such as a ComfortID controller or a service tool: when OCCUPIED is forced to YES, the unit is considered occupied, when OCCUPIED is forced to NO, the unit is considered unoccupied. If the unit is being controlled by Linkage, the occupancy is communicated and mapped to OCCUPIED as an input. Linkage does not force the point only write to it, therefore a force applied to OCCUPIED will override it.

If OCCUPIED is not being forced or written to, proceed to the level 2 priority.

LEVEL 2 PRIORITY

Level 2 is considered occupant interaction, and consists of ZS Motion Sensor, Timed Override, and Remote Occupancy Switch. A timed override button press will override a remote occupancy switch if both are installed for operation. The motion sensor will override both timed override and remote occupancy switch. Refer to the section "ZS Motion Sensor" on page 68 for more details.

While using the programmed schedule, occupancy can be temporarily switched from unoccupied to occupied by pressing the override button for approximately 3 seconds on the T-55, T-56, or T-59 space temperature sensor. The length of the override period when pressing the override button is determined by the Override Time Limit (***TIMED OVR LENGTH***). The hours remaining in override is displayed as Timed Override Hours (***TIMED OVR HOURS***). This point can also be changed from the local display or network to set or change the override period length.

Remote Occupancy Switch (***REMOTE OCC SWITCH***) can be forced or configured for operation based on an actual switch. The physical switch should be configured to either Normally Open or Normally Closed when the user would like to control the occupancy with an external switch. This switch is field-supplied (24v, single pole, single throw [SPST]). There are two possible configurations for the remote occupancy switch:

1. (***REMOTE OCC TYPE = 0***) Normally Open Switch
2. (***REMOTE OCC TYPE = 1***) Normally Closed Switch

If the switch is configured to No Switch (***REMOTE OCC CHAN = None***), the switch input value will be ignored and software will proceed to level 3 priority. For each type of switch, the appropriate configuration and states are listed in the following table.

TYPE OF SWITCH	SWITCH CONFIGURATION	STATE OF SWITCH AND STATE OF OCCUPANCY
Occupied when Closed or Unoccupied when Open	Normal Open (0)	Open and Unoccupied
		Closed and Occupied
Occupied when Open or Unoccupied when Closed	Normal Closed (1)	Open and Occupied
		Closed and Unoccupied

LEVEL 3 PRIORITY

The following occupancy options are determined by the state of Occupancy Schedule Number (***SCHEDULE NUMBER***) and the Global Schedule Broadcast (***BROADCAST SCHEDL?***).

1. (***SCHEDULE NUMBER = 0***) The unit is always considered occupied and the programmed schedule is ignored. This is the factory default.
2. (***SCHEDULE NUMBER = 1-64***) Follow the local programmed schedule. Schedules 1 to 64 are local within the controller. The unit can only store one local schedule and therefore changing this number only changes the title of the schedule table.
3. (***SCHEDULE NUMBER = 65-99***) Follow the global programmed schedule. If the unit is configured as a Global Schedule Broadcaster (***BROADCAST SCHEDL? = YES***), the unit will follow the unit's programmed schedule and broadcast the schedule so that other devices programmed to follow this schedule number can receive the schedule. If the unit is not programmed as a Global Schedule Broadcaster (***BROADCAST SCHEDL? = NO***), the unit will receive broadcasted schedules from a unit programmed to broadcast this schedule number.

Indoor Fan Operation

These units use the Staged Air Volume (SAV) method of controlling the supply fan for a typical constant volume rooftop unit. This control method employs an Electronic Commutated Motor (ECM) to operate the supply fan at different speeds in order to achieve energy savings through reduced fan power. This method is specifically not concerned with controlling static pressure in the supply duct, but rather with setting different fan speeds for different operating conditions, such as ventilation mode or part-load mechanical cooling.

The SAV function is NOT a Variable Air Volume (VAV) function. The fan adapts its speed to one of seven based on mode and current state to satisfy a demand. The speeds consist of off (0%) and six configurable values. The configurable fan speeds are: Maximum Speed (***MAXIMUM IDF SPEED***), Ventilation (***VENT IDF SPEED***), Heating (***HEATING IDF SPD***), Free Cool (***FREE COOL IDF SPD***), Mechanical Low Cooling (***LOW COOL IDF SPD***), and Mechanical High Cooling (***HIGH COOL IDF SPD***), The ECM is powered direct from the distribution block and is always on with power applied unless the CB is tripped. When the thermostat or space sensor control conditions require the fan on, the ECM will then be ramped to desired speed. Fan speed is always calculated by evaluating the current applicable conditions. Each fan speed condition is evaluated independently, and the highest fan speed is used. For example, if a cooling call occurs during Ventilation mode, the unit mode will transition to cooling but the fan speed is set to the higher of the two (***VENT IDF SPEED*** or ***LOW COOL IDF SPD***). Refer to the speed configurations below for when the fan will run at them.

The Commanded Fan Speed (***OUTPUTS → GENERAL OUTPUTS → COMMANDED IDF RPM***) represents the controls commanded speed for the fan at any given time. This commanded speed is determined by the unit's current HVAC mode and the unit control type. If configured for IAQ fan operation, the fan may be turned on to satisfy air quality demands. See the Indoor Air Quality section if using IAQ (indoor air quality) accessory sensors. The fan can run under thermostat or space sensor control and will remain on if compressors or heat relays are ever stuck on. If Shut Down on IDF Failure is enabled (***SHUTDOWN IDF FAIL = Yes***), the fan and unit will be shutdown without delay on fan alarm conditions. Fan off delays are honored when exiting specific HVAC modes. The Fan-off Delay delays are as follows: Cooling (***COOL FANOFF DELAY***), and Heating (***HEAT FANOFF DELAY***).

INDOOR (SUPPLY) FAN MAXIMUM SPEED (***MAXIMUM IDF SPEED***)

Max speed is the highest fan speed allowed. This is set in terms of percentage instead of RPM and is defaulted to 100%. This max speed should be set lower if needed for building or duct protection. Most safety conditions for the unit will override the fan speed to this to help protect the unit.

> IMPORTANT: ***MAXIMUM IDF SPEED*** is used in the minimum position curves and therefore important to set properly.

VENTILATION INDOOR FAN SPEED
(***VENT IDF SPEED***)

This configuration defines the fan speed used in Ventilation (fan-only) mode. Ventilation mode is when the supply fan is running, but there is no demand for heating or cooling. In thermostat mode, this is with just a G call. In space sensor control, this is when the unit is Occupied mode and the indoor fan is configured to always run while occupied (***OCCUPIED FAN?***). If the indoor fan is configured for intermittent fan (***OCCUPIED FAN? = No***), the Mode will be off instead of Ventilation and the fan will not run unless a heating or cooling mode is needed. During the unoccupied period, the fan will always operate intermittently. The economizer damper will adjust its position based on how far away this speed is from max speed for ventilation.

> IMPORTANT: It is important that the ventilation rate is checked after setting this speed to verify that the unit can properly ventilate the space per requirements. Adjusting this configuration or the economizer minimum setting curve should be performed to meet job requirements.

HEATING INDOOR FAN SPEED (***HEATING IDF SPD)***

This configuration defines the fan speed used when in heating mode and running heat. On units configured for Electric heat (***UNIT TYPE OF HEAT***) and configured for Preheat without the fan (***PREHEAT W/O IDF***), this heat speed will be delayed on based on the Preheat fan delay time (***PREHEAT FAN DELAY***). Once this preheat time has expired or not configured for preheat, the fan will run at this heat speed while heat is on.

FREE COOLING INDOOR FAN SPEED
(***FREE COOL IDF SPD***)

This configuration defines the initial fan speed used when in Free Cooling. Refer to the Economizer Controls Operation section for details on free cooling. The fan will stay at this configured speed whenever only the damper is being used for free cooling. If the damper is at 100% for 5 minutes the fan will ramp to the high cooling speed. It is locked there until the actual damper position falls below 75% at which time it will ramp back down to this configured speed.

LOW COOLING INDOOR FAN SPEED

This is the fan speed used when the first stage of mechanical cooling is being performed. This is determined by an offset configuration (LOW COOL OFFSET) based on the unit model number. This impacts the unit efficiency and should only be changed by service personal if needed.

HIGH COOLING INDOOR FAN SPEED
(***HIGH COOL IDF SPD***)

This configuration defines the fan speed used when all (full load) stages of mechanical cooling is being performed. When performing integrated cooling with the economizer this speed will be used. When only free cooling with a high cool demand, this speed will be used.

Cooling Operation

The unit's cooling operation consists of: demand and mode determination, staging request to satisfy the demand, and handling a request with the unit's resources. These resources can include compressors, an economizer, and fan speed based on options. This section covers mechanical cooling. For economizer free cooling, refer to the Economizer Operation section (starting on page 26).

COOLING MODE CONTROL

The cooling HVAC mode (***OPERATING MODE***) has 9 different operating sub modes (***SUBMODE***): ECON FREE COOLING, UNOCC. FREE COOL, MECH. COOLING, ECON/MECH COOLING, DEHUMIDIFICATION, DEHUM/MECH COOLING, DEHUM PREVENTED, COOLING PREVENTED, and SHUTTING COOL OFF. These are all part of a general cooling mode and resemble the specific type of cooling that is being performed at any given time. All types of cooling are still performed under the general cooling function, and the expanded text is for user reference only.

For the unit to enter cooling mode, three things must be true: the indoor fan must be OK to use, the mode changeover time guard must be expired, and there must be a cooling or dehumidification demand (Y1, Y2, space cool demand, or humidity demand). The unit will remain in cooling for at least one minute or until any of the above conditions turn false. The cooling mode does not officially end until the compressor is off and the fan off delay has expired.

COOLING STAGING CONTROL

Once the unit is in a cooling mode, determine what the demand is and how to satisfy it. If an economizer is installed and can be used for cooling (***OK TO USE FREE COOLING? = Yes***), the unit will use it first (see economizer section for its operation). If the economizer cannot be used or additional cooling is needed, a mechanical cooling check is performed. OK to use Compressors? (***OK TO USE COMPS?***) will be set to yes when the outdoor temperature (***OUTDOOR AIR TEMP***) is above the Circuit A Lockout temperature (***CIR.A LOCKOUT OAT***) and the Circuit A is not locked out for diagnostic reasons (***CIRCUIT A LOCKOUT***). Based on the unit control configuration, requested cooling stages (***REQ. COOL STAGES***) will be determined then passed to compressor control to actually add the cooling stages.

There are two ways of requesting stages when thermostat control is enabled, Traditional thermostat control or adaptive control. Traditional thermostat control is used if set for non-adaptive thermostat (***ADAPTIVE TSTAT = NO***) and the unit cannot use the economizer for free cooling. If set for adaptive thermostat (***ADAPTIVE TSTAT = YES***) or any time the economizer is available for free cooling, the unit will use adaptive control for staging.

When configured for Space sensor or RAT control (***UNIT CONTROL TYPE***) the unit will use adaptive control for staging. With either staging method there are two supply air temperature limits that apply, one restricts more cooling stages and the other will remove cooling stages. If at any time the Supply-Air Temperature (***SUPPLY AIR TEMP***) falls below the Minimum Supply Air Temperature Upper Level (***UPPER MIN SAT***), the requested stages will not be allowed to increase. If at any time the SAT falls below the Minimum Supply Air Temperature Lower Level (***LOWER MIN SAT***), the requested stages will be reduced by one. If these SAT limits are configured so that they are too close together, the last stage might cycle rapidly, slowed only by its minimum on and off-time requirements.

Adaptive Control

Stage timers and Supply air trend apply when determining the request for stages. The first request (***REQ. COOL STAGES =1***) comes immediately when starting the staging process. The Cool Stage Increase Time (***COOL STAGEUP TIME***) has to expire and the Supply-Air Trend (***SUPPLY AIR TREND***) has to be above the cooling supply air trend level (***COOL SATTREND LEV***) before another stage can be added. Requested stages will only be allowed to increase as the actual system demand allows (***DEMAND***). A "LOW COOL" demand will only allow one requested stage, and "HIGH COOL" all stages. The requested stages will be reduced if the cooling demand is lowered or dropped completely, or if the supply air falls below the lower level (***LOWER MIN SAT***).

Traditional Thermostat Control

Stage timers and Supply air trend do not apply when determining the request for stages. Request staging will follow the thermostat inputs directly. "LOW COOL" will request one stage. "HIGH COOL" will request two stages.

COMPRESSOR CONTROL

The compressor control works hand and hand with the staging control. As the staging control request stages, the compressor control determines what is available or running and tries to provide stages for what is requested. The availability of the compressors depends on time guards, circuit diagnostics, and outdoor temperature. The low cooling compressor (***LOW COOL COMP***) informs the control which compressor is desired for a low cooling demand.

NOTE: ***LOW COOL COMP*** is not applicable on all systems. On single compressor units this setting should be left on the default of 1.

There are time guards to protect the compressors, Compressor Min On Time (***COMP MIN ON TIME***) and Compressor Min Off Time (***COMP MIN OFF TIME***) apply before a compressor can be turned back on or turned off. Timeguard A1 (***COMP A1 TIMEGUARD***), Timeguard A2 (***COMP A2 TIMEGUARD***), and Timeguard loader (***COMP LDR TIMEGUARD***) display the time the compressors and loader have before available for use or can be turned off.

Circuit diagnostic tests are performed during operation which may or may not allow the compressors to be used. The availability of the compressors are shown as Compressor A1 Available (***COMP A1 AVAILABLE***) and Compressor A2 Available (***COMPR A2 AVAILABLE***). The lockout status of the compressors are shown as Compressor A1 Lockout (***COMP A1 LOCKOUT***) and Compressor A2 Lockout (***COMP A2 LOCKOUT***). The actual stages running at any given time is displayed as Actual Cooling Stages (***ACTIVE COOL STAGE***). Individual compressor output state is shown as (***COMPRESSOR A1***), (***COMPRESSOR A2***), and (***COMP A LOADER***).

NOTE: The unit will have a compressor A2 or a Compressor Loader, never both.

Any time the outdoor ambient falls below the low cooling minimum outdoor temperature (***LOW COOL MIN OAT***), the low cooling lockout will be active (***LOW COOL LOCKOUT***) preventing compressor A1 from running by itself. This means the loader will be on with the compressor.

There are three types of compressor configuration in these units. This is determined by the Compressor Framework (***CMP FRAMEWORK***) and set in the factory based on the unit model number. The 3 frameworks are described below:

1CIR2 CMP

This is a system with one refrigerant circuit containing 2 compressors in tandem. Compressors are named A1 and A2. This is set for 50FEQ 08-28 and 50GEQ07-12 units.

1CMP+LDR

This is a system with one refrigerant circuit containing 1 compressor equipped with a loader. Compressor name is A1 and Loader is ALOADER. This is set for 50FEQ 07 and 50GEQ 04-06 units.

1CMP

This is a system with one refrigerant circuit containing only 1 compressor. The compressor name is A1. This is set for 50FEQ 04-06 units.

OUTDOOR FAN CONTROL

Outdoor fan control is different based on the unit model number. ***ODF CONTROL SCHEME*** sets the type of outdoor fan control used and should not be changed as it is set by the unit model in the factory.

50FEQ04-07 and 50GEQ04-06 units:

The outdoor fan can be set for a single speed or 2 speed motor. The 3 to 6 ton 50FEQ units will have a single speed ODF. The 3 to 5 ton 50GEQ will have a 2 speed ODF. The ODF Relay Enabled (***ODF RELAY ENABLE***) point will tell the control when a 2 speed motor is installed. The 2 speed relay state output is shown as Outdoor Fan Relay (***ODF RELAY***). The on and off relay for the ODF is shown as ***ODF ON/OFF RELAY***.

Normal Operation

On the single speed ODF system, the ODF will come on and off with the compressor shown as ***ODF ON/OFF RELAY.*** On the 2 speed ODF systems, the ODF will come on and off with the compressor at low speed. The High speed ODF will be active when the compressor loader is on, and done by energizing the ***ODF RELAY***.

Low Ambient Operation

When equipped with the head pressure device and the OAT is below approximately 40°F, the ODF speed will vary based on the condensing temperature. Regardless of active low or high speed the head pressure device will modulate the ODF speed to maintain approximately 95°F temperature at the coil sensor location. In low speed operation however the head pressure device cannot use high speed if needed until the control turns on the ***ODF RELAY***.

50FEQ08-09, 14-28 and 50GEQ07, 08, 12 units:

There are two to six outdoor fan systems each with a single speed motor. These motors are all powered from a single Relay/Contactor when the Outdoor Fan Relay (***ODF RELAY***) is turned on. The other outdoor fan relays (***ODF RELAY 2 and ODF RELAY 3***) allow the power to pass on to one or more outdoor fan motors and are turned on and off based on outdoor ambient temperature. The ***ODF ON/OFF RELAY*** point is not applicable on these units.

Normal Operation

When turning on a compressor, all the outdoor fans will be turned on with the Outdoor Fan Relay (***ODF RELAY***), Outdoor Fan Relay 2 (***ODF RELAY 2***), and Outdoor Fan Relay 3 (***ODF RELAY 3***). Refer to the unit's power wiring diagram for details on which motors are tied to which relay. ODF RELAY 2 will turn on/off one ODF on 2 fan systems and turn on/off 2 ODF on 3-6 fan systems. OFR RELAY 3 will turn on/off 2 ODF on 6 fan systems. When the outdoor temperature is below the low ambient setting (***LOW AMBIENT TEMP)*** the control will turn off Outdoor Fan Relay 2 ***(ODF REALY 2***), in addition on units with 6 ODF systems, when the outdoor temperature falls below the low ambient 2 setting (***LOW AMBIENT TEMP2***) the control will turn off Outdoor Fan Relay 3 (***ODF REALY 3***).

Low Ambient Operation

When equipped with the head pressure device and the OAT is below the low ambient setting (***LOW AMBIENT TEMP***), the ODFs speed will vary based on the condensing temperature. On 2 ODF systems only one fan will run with the head pressure control, and on 3-6 fan systems only 2 ODF will run with the head pressure device. The head pressure device will modulate the ODF's speed to maintain approximately 95°F temperature at the coil sensor location. Refer to the unit's wiring diagram for the specific ODFs run by the head pressure device. On 6 ODF systems while the outdoor temperature is between the ***LOW AMBIENT TEMP*** and the ***LOW AMBIENT TEMP2*** settings, only 2 ODFs will be on head pressure control and 2 ODF will be fixed speed.

50FEQ12 and 50GEQ09 units:

There is one ECM outdoor fan. The ECM is programmed with five discrete speeds that are activated with three control wires. Power is always on to the ECM and relays will dictate the speed command to the motor from the SystemVu controller. An isolation relay (OFR2 on the wiring diagram) will be used to prevent two of the ECM wires being active at the same time. The ***ODF ON/OFF RELAY*** point is not applicable on these units. See Table 13 for a summary of logic.

Normal Operation

When a compressor is turned on ***ODF RELAY*** will turn on to run the ECM at the low cooling speed. Then the second stage compressor is turned on ***ODF RELAY 2*** will turn on to energize the isolation relay causing the ECM to go to the High cooling speed.

Low Ambient Operation

When the outdoor temperature falls below the low ambient setting (***LOW AMBIENT TEMP***), ***ODF RELAY 3*** will turn on. This is in addition to ODF RELAY and ODF RELAY 2 to cause the low or high cooling speeds to be reduced. During low cooling, when the outdoor temperature falls below the low ambient 2 setting (***LOW AMBIENT TEMP2***), the ***ODF RELAY*** will be turned off so only ***ODF RELAY 3*** is on. This will run the ECM at its minimum speed. During high cooling, the ***LOW AMBIENT TEMP2*** has no impact, and all 3 relays will remain on.

Table 13 — 50FEQ12 and 50GEQ09 Outdoor Fan Relay Logic

MODE	OAT	COMP1	COMP2	SYSTEMVU RELAYS		
				OFR	OFR2	OFR3
Off	N/A	Off	Off	Off	Off	Off
Cool1	>LA	On	Off	On	Off	**Off**
	>LA2, ≤LA	On	Off	ON	Off	On
	≤LA2	On	Off	Off	Off	On
Cool2	>LA	On	On	On	On	Off
	>LA2, ≤LA	On	On	On	On	On
	≤LA2	On	On	On	On	On
Mechanical Heat[a]	N/A	On	On	On	On	Off

NOTE(S):

a. During mechanical heating all outdoor fans will be on and at maximum speed per the respective systems mentioned above. During defrost the fans will be turned off.

LEGEND

LA — Low Ambient Temp
LA2 — Low Ambient Temp2

Indoor Fan Based Dehumidification

Units can be set for improved dehumidification operation through fan based dehumidification (FBD), ***SETTINGS → UNIT CONFIGURATIONS → COOLING → FAN BASED DEHUM → FBD CONTROL TYPE***. Units are factory defaulted to ***FBD CONTROL TYPE = 0*** which means that any dehum demand is ignored. There are two fan based dehumidification options, Max Comfort (***FBD CONTROL TYPE = 1***) and Max Dehumidification (***FBD CONTROL TYPE = 2***). Fan based dehumidification requires the installation and configuration of either a space relative humidity sensor or a relative humidity switch input.

Max Dehum or Max Comfort dehumidification requires an existing demand for cooling to operate. This feature only modifies the fan speed during the cooling mode and will not enable the cooling mode by itself.

MAX DEHUM

When the ***FBD CONTROL TYPE*** is set to (2) Max Dehum, the control will try to satisfy the dehumidification demand. When the unit receives a dehum demand a PID control algorithm will modulate the indoor fan while the compressor is running to maintain minimum suction temperature (***FBDH_SST***). The cooling stages will be controlled as normal cooling demand requests, only the IDF will change for dehumidification demand.

MAX COMFORT

When the ***FBD CONTROL TYPE*** is set to (1) Max Comfort, the control will try to satisfy the dehumidification demand and minimize cold air dump. When the unit receives a dehum demand a PID control algorithm will modulate the indoor fan while the compressor is running to maintain the minimum FBD supply air comfort set point (***FBDH_SAT***) while also maintaining the minimum suction temperature (***FBDH_SST***). The cooling stages will be controlled as normal cooling demand requests, only the IDF will change for dehumidification demand.

Heating Operation

The unit's heating operation consists of: demand and mode determination, staging request to satisfy the demand, and handling a request with the unit's resources. The unit enters a heating mode based on a demand, decides how to satisfy the demand, executes its plan, and then leaves the heating mode.

HEATING MODE CONTROL

The heating HVAC mode (***OPERATING MODE***) has 5 different operating sub modes (***SUBMODE***): HEATING, DEFROST, SA TEMPERING, HEATING PREVENTED, and SHUTTING HEAT OFF. These are all part of a general heating mode and resemble the action heat mode is taking at any given time. All types of heating are still performed under the general heating function, and the expanded text is for user reference only. For the unit to be allowed to enter the heat mode, three things must be true: the indoor fan must be ok to use, the mode changeover time guard must be expired, and there must be a heating demand. The unit will remain in heating for at least one minute and until the demand is dropped or if any of the above conditions are false. The heating mode does not officially end until all heat stages are off, and the fan off delay has expired (***HEAT FANOFF DELAY***).

SUPPLY-AIR TEMPERATURE SENSOR (SAT) HEAT MODE

The SAT Heat Mode Sensing (***SAT DURING HEAT?***) informs the unit that the supply air sensor is valid during heating in its current location. This configuration affects the Supply Air Temperature (***SUPPLY AIR TEMP***) value displayed as listed below.

When ***SAT DURING HEAT?*** is disabled, the Supply Air Temperature (***SUPPLY AIR TEMP***) value on the SystemVu display and the network will hold a zero when heat outputs come ON and for 5 minutes after. When ***SAT DURING HEAT?*** is enabled, the Supply Air Temperature (***SUPPLY AIR TEMP***) sensor reading is displayed at the SystemVu controller and network during heating mode.

HEATING STAGING CONTROL

Once the unit is in a heating mode, it determines what the demand is and how to satisfy it. To request stages the number of heat stages (***HEATING STAGE QTY***) must be greater than zero. As a heat pump unit this will be set in the factory to 1 stage for mechanical heat, however if accessory electric heat is added in the field this must be updated. If the Outdoor Air Temperature (***OUTDOOR AIR TEMP***) is greater than the Heating Lockout Temp (***HEAT LOCKOUT OAT***), all the heat stages will be locked out (***HEAT LOCKOUT***). The heating check will display if it is OK to heat or not (***OK TO USE HEAT***). Requested Heating Stages (***REQ. HEAT STAGES***) will be determined then passed to heater control to properly add the heating stages.

There are two ways of requesting stages, traditional thermostat control or adaptive control. Traditional thermostat control is used if set for non-adaptive thermostat (***ADAPTIVE TSTAT = NO***) and thermostat control (***UNIT CONTROL TYPE***). If set for adaptive thermostat (***ADAPTIVE TSTAT = YES***), the unit will use adaptive control for staging. When configured for space sensor or RAT control (***UNIT CONTROL TYPE***) the unit will use adaptive control for staging.

With either staging method there are two supply air temperature limits, the Maximum SAT Lower Level (***LOWER MAX SAT***) the Maximum SAT Upper Level (***UPPER MAX SAT***). Any time the supply air temperature rises above lower level the heat staging will be limited to what is currently on and no additional stages will be added until the supply air temperature falls back below the lower level. If the supply air temperature rises above the upper level, then heating will be reduced by removing one stage. That stage will not be added again until the Supply Air Temperature falls below the lower level. If the supply air temperature stays above the upper level, then another stage will be removed. If the upper and lower levels are configured so that they are close together, the last stage of heat might cycle rapidly, slowed only by its minimum on and off-time requirements.

Adaptive Control

Stage timers and Supply air trend apply when determining the request for stages. The first request (***REQ. HEAT STAGES =1***) comes immediately when starting the staging process. The Heat Stage Increase Time (***HEAT STAGEUP TIME***) must expire and the Supply-Air Trend (***SUPPLY AIR TREND***) must be above the Heating supply air trend level (***HEAT SATTREND LEV***) before another stage can be added. Requested stages will only be allowed to increase as the actual system demand allows (***DEMAND***). A "LOW HEAT" will only allow one requested stage and "HIGH HEAT" 2 stages. The requested stages will be reduced if the heating demand is lowered or dropped completely, or if the supply air falls below the lower level (***LOWER MIN SAT***).

Traditional Thermostat Control

Stage timers and Supply air trend do not apply when determining the request for stages. Request staging will follow the thermostat inputs directly. "LOW HEAT" will request one stage. "HIGH HEAT" will request 2 stages.

HEATER CONTROL

Heater control is split into 2 types of heat: Mechanical Heat and Heat Relay control. The specific heat being used at any given time can be seen as the active heat type (***ACTV HEAT SOURCE***) with values of the following: mechanical heating only (***MECH ONLY***), mechanical heat and one stage electric heat (***MECH+1EH***), mechanical heat and two stages of electric heat (***MECH+2EH***), electric heat one stage (***ELCTHT1***), electric heat both stages (***EH1+EH2***), or defrost active (***DEFROST***). Heater control will determine the actual heat stages (***ACTIVE HEAT STAGES***) needed or allowed to satisfy the request. Actual stages can be up to three while the requested stages can only be up to two, this allow 2 stages of electric heat if needed. Refer to Table 14 for a quick look at heating stages, and read below for detailed operation.

Mechanical Heat Control

When the outdoor temperature is below the mechanical heating lockout (***MEC HEATLOCK TEMP***), mechanical heat will not be allowed to operate, and only electric heat will be used. The availability of the compressors depends on time guards and circuit diagnostics. When mechanical heat is active (***MECH HEAT ACTIVE =Yes***), the control will turn on the liquid line solenoid valve (***LIQUID LINE VALVE***). The liquid line valve will remain on for the configured amount (***LLSV ON TIME***) after ending mechanical heat to help with efficiency and equalization. The reversing valve (***REVERSING VALVE***) is de-energized during mechanical heat. Defrost mode will be turned on as needed to defrost the outdoor coil, refer to the section "Defrost Control" on page 26 for more details. The compressors and loader will always be run together for mechanical heat as the first heating stage (***ACTIVE HEAT STAGE***).

There are time guards to protect the compressor, Compressor Min On Time (***COMP MIN ON TIME***) and Compressor Min Off Time (***COMP MIN OFF TIME***) apply before the compressors can be turned back on or turned off. Timeguard A1 (***COMP A1 TIMEGUARD***), Timeguard A2 (***COMP A2 TIMEGUARD***), and Timeguard loader (***COMP LDR TIMEGUARD***) display the time the compressors and loader have before available for use.

NOTE: The unit will have a compressor A2 or a Compressor Loader, never both.

Circuit diagnostic tests are performed during operation which may or may not allow the compressors to be used. The availability of the compressors is shown as Compressor A1 Available (***COMP A1 AVAILABLE***) and Compressor A2 Available (***COMPR A2 AVAILABLE***). The lockout status of the compressors is shown as Compressor A1 Lockout (***COMP A1 LOCKOUT***) and Compressor A2 Lockout (***COMP A2 LOCKOUT***). Individual compressor output state is shown as (***COMPRESSOR A1***), (***COMPRESSOR A2***), and (***COMP A LOADER***). The compressor and circuit diagnostics are the same in heating as they are in cooling except for low suction and unexpected off. Refer to the alarm section for more details.

The outdoor fan state (***ODF STATE***) will always be on and at high speed during mechanical heat. Refer to the Cooling Operation section "Outdoor Fan Control" on page 22 for more details.

Heat Relay Control

The heat relay control is responsible for energizing or de-energizing the heat stage relays and works hand and hand with the staging control and mechanical heat control. As the staging control requests stages or mechanical heat is not allowed, the heat relay control determines what actual heat relays are available or energized and tries to provide stages for what is requested. The availability of heat relays depends on the heat installed, how many stages, and time guards. The Number of Heat Stages (***HEATING STAGE QTY***) configuration tells the control how many heat relays can be used. Heat Stage 1 Timeguard (***HEAT 1 TIMEGUARD***) and Heat Stage 2 Timeguard (***HEAT 2 TIMEGUARD***) display the time a respective heat relay has before it can change state. The available stages at any given time are displayed as heat 1 available and heat 2 available (***HEAT 1 AVAILABLE*** and ***HEAT 2 AVAILABLE***). Heat Stage 1 Relay (***HEAT 1 RELAY***) and Heat Stage 2 Relay (***HEAT 2 RELAY***) are displayed on when the respective relay is energized. There are time guards to protect from short cycling, Heat Minimum On Time (***HEAT MIN ON***) and Heat Minimum Off Time (***HEAT MIN OFF***) apply before a heat relay can be turned back on or turned off.

Table 14 — Heat Staging Summary

INPUTS				OUTPUTS			
REQ. HEAT STAGES	MECHANICAL HEAT LOCK	HEAT 2 OAT LOCKOUT	DELAY FOR EHEAT 2 expired	MECHANICAL HEAT ACTIVE	HEAT 1 RELAY	HEAT 2 RELAY	ACTIVE HEAT STAGES
0	—	—	—	No	Off	Off	0
1	No	—	—	Yes	Off	Off	1
1	Yes	—	—	No	On	Off	1
2	No	No	No	Yes	On	Off	2
2	No	No	Yes	Yes	On	On	3
2	No	Yes	—	Yes	On	Off	2
2	Yes	—	—	No	On	On	2

LEGEND

— Logic "don't care" state

If equipped, the Heat stage relay 2 (***HEAT 2 RELAY***) may be restricted for energy and comfort. While running mechanical heat (***MECH HEAT ACTIVE =Yes***), heat relay 2 will not operate as the third heat stage until heat relay 1 has been on for 30 minutes. This 30-minute timer is displayed as a delay timer for electric heat 2 (***DELAY FOR EHEAT2***). Also, the third stage heat (***HEAT 2 RELAY***) will be prevented if the outdoor temperature is higher than the 3-stage maximum temperature (***MAX OAT FOR 3STGS***). If mechanical heating is prevented or locked out, the heat relay 2 will be used as a standard second stage. Table 14 provided a quick summary for reference.

DEFROST CONTROL

Defrost is a sub mode to the heating mode and occurs when ice builds up on the outdoor coil. The defrost switch (***DEFROST SWITCH***) will close when the coil freezes up to its location. When starting up mechanical heat the defrost switch will be ignored for the start defrost delay (***START DEFROST DLY***). There is a wait time the control must wait between defrost cycles (***TIME BTWN DEFROST***), and should be adjusted for the specific location the unit is installed. At any given time, the time between defrost cycles can be checked with the defrost interval timer (***NEXT DEFROST IN***). During mechanical heat, defrost mode will activate (***DEFROST ACTIVE = Yes***) when the defrost switch closes and the time between defrost cycles has expired. The defrost mode will remain active for a minimum of 30 seconds and a maximum based on the max time setting (***MAX DEFROST TIME***) with the active time displayed as ***TIME IN DEFROST***. The defrost mode will end at the maximum time limit or when the defrost switch opens. During defrost mode the revering valve (***REVERSING VALVE***) will be energized putting the unit into cooling but the outdoor fan will be turned off, this will heat the outdoor coil to remove the ice. If equipped with 1 stage electric heat, it will be turned on. If equipped with 2 stage electric heat, the first stage will be turned on and stage 2 will only turn on if the heating demand is High Heat.

Supply Air Tempering

Supply air tempering control operates the electric heat to maintain a minimum supply air temperature during conditions where very cold outdoor air causes the supply air temperature to fall below the configured Supply Air Tempering Setpoint. This occurs during periods where DCV is active and increasing the amount of outdoor air or in cases where the system is operating at very low airflow and the calculated economizer position has increased to maintain a constant ventilation rate. The user can enable/disable Supply Air Tempering. The following conditions must be true for the supply air tempering algorithm to operate:

- The unit is equipped with electric heat (***HEATING STAGE QTY*** is greater than 1).
- The SA Tempering is set to Yes (***OK TO SA TEMPER = YES***).
- The indoor fan is on.
- The System Mode is in Vent (Ventilation or Supply Fan Only) or IAQ Override.
- The Outdoor Air Temperature < Maximum temperature (***TEMPER MAX OAT***).

If all the above are true, the SystemVu control will monitor the SAT sensor value and operate the first stage of heat to temper the supply air as required in order to maintain the configured SA Tempering Setpoint.

Two Position Damper Operation

The two position damper is used for ventilation. If the indoor fan is not on the two position damper will not open. If the two position damper is installed then ventilation method will be set to two position damper (***VENT METHOD = 2POS DMPER (2)***), and two position damper channel will be configured (***2POS/ERV CHANNEL***). When the unit is occupied and the indoor fan is running, the two position damper configured relay will energized. This then activated the motor at the damper to open to the mechanical stop position enforced at the actuator. This will provide the customer set ventilation rate determined for the space.

NOTE: If two position damper is installed with a multiple speed system, the ventilation rate will be high or low depending on the specific speed running during set up and the current speed being run for normal operation.

Economizer Operation

The economizer is used for ventilation, and cooling. If the indoor fan is not on, the economizer will not operate. If an economizer is installed, then Vent Method ***(VENT METHOD = ECON)*** should be set to economizer. The unit produces a 4-20mA signal which is then changed to a 2-10V signal with a 500 ohm resistor, which can control the economizer actuator. The economizer output signal is displayed by the Economizer Commanded Position (***ECON CMD POSITION***). The actuator's built-in 2 to 10VDC feedback signal is read in as an analog input to know the actual position which is displayed as Economizer Actual Position (***ECON ACT POSITION***). The economizer system also permits this unit to perform smoke control functions based on external control switch inputs. Refer to the section "Smoke Control" on page 30 for detailed discussions.

MINIMUM VENTILATION

The economizer will open to allow ventilation when the indoor fan is turned on and the unit is in the occupied state. The economizer damper position at any given time for ventilation is displayed as the Min Position in Effect (***EFFECTIVE MIN POS***). This minimum position can be effected by the indoor fan speed (***COMMANDED IDF RPM***) and indoor air quality. To maintain a constant airflow through the economizer, as the indoor fan speed decreases or increases the damper minimum position will increase or decrease, respectively. This relationship curve is shown in Fig. 11.

NOTE: The software point names are used in Fig. 11 as to not clutter the graph. These points are not individually set and therefore only visible from a network for troubleshooting.

These units can also be equipped with optional CO_2 sensors for additional indoor air quality control. When unit is equipped with a return duct CO_2 sensor or return duct CO_2 sensor and outside air CO_2 sensor the economizer minimum position vs. fan speed curve will be recalculated based on the CO_2 level of the return and/or outside air as shown in Fig. 11. When performing Demand Controlled Ventilation, the damper's Min Position in Effect (***EFFECTIVE MIN POS***) will operate in the shaded area of Fig. 11 based on the IAQ Level (***IAQ***) and the Commanded Fan Speed (***COMMANDED IDF RPM***). See the section "Indoor Air Quality (IAQ)" on page 29 for more details on Demand Controlled Ventilation (DCV).

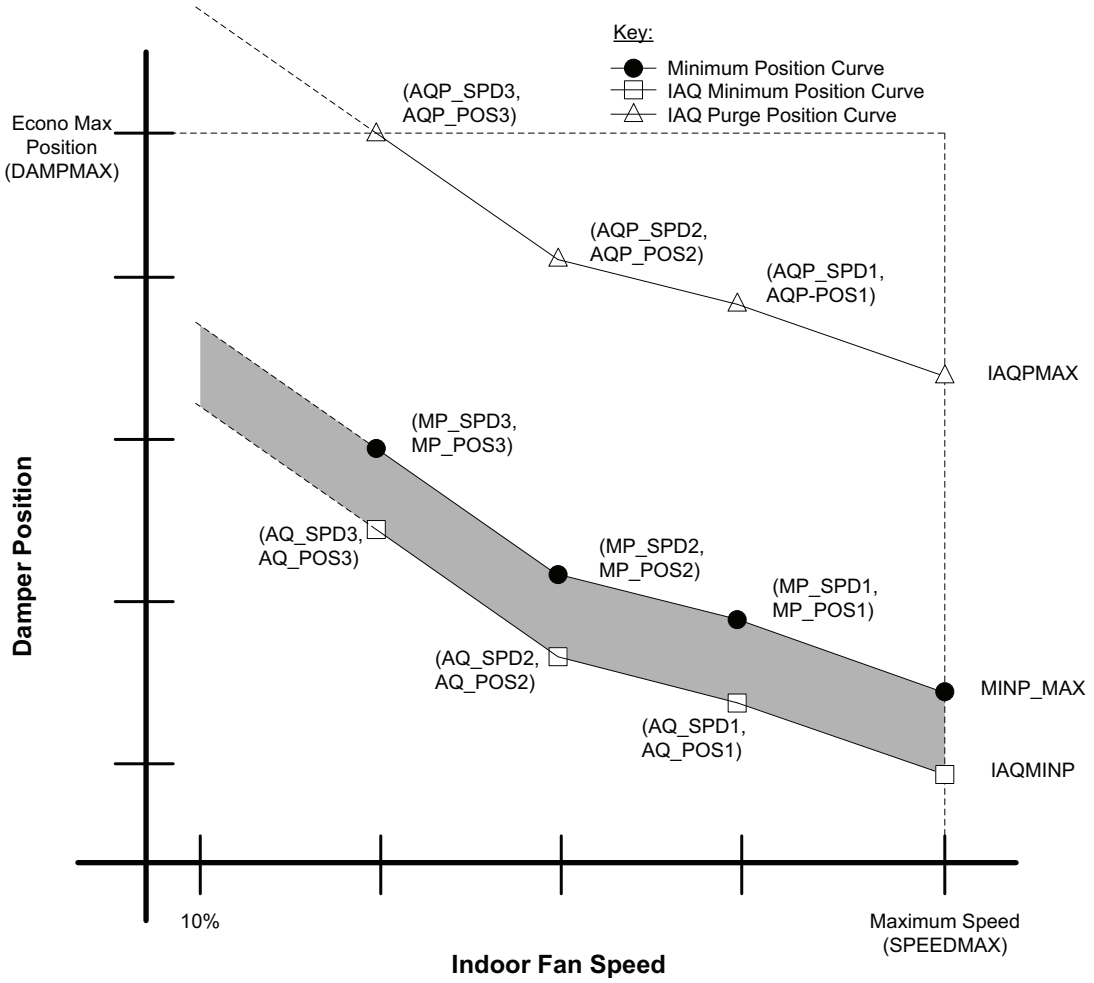

Fig. 11 — Minimum Damper Position Curves

The damper position curve can be field adjusted per application if needed.

1. Activate test mode to control the fan and dampers to achieve the correct numbers.
2. Set the fan speed percentage (%) to the highest speed allowed for building and duct integrity. This is 100% by default and typically left there. If different make sure that the IDF maximum fan speed (***IDF MAX SPEED***) is updated to this tested value.
3. Open the damper to the position which satisfies the highest ventilation requirement running maximum fan speed, and then set the Economizer minimum at maximum fan speed (***MIN POS → MAX FAN***) to this damper position.
4. Set the fan speed to a realistic operating speed in the upper range, and then set the User Minimum Position Speed 1 (***MIN POS SPEED 1***) equal to that speed. This should be somewhere in the 70% range.
5. Open the damper to the position which satisfies the highest ventilation requirement running speed 1 fan speed, and then set the User Minimum Position Damper Position 1 (***MIN POS DAMP 1***) to this damper position.
6. Set the fan speed to a realistic operating speed in the mid-range, and then set the User Minimum Position Speed 2 (***MIN POS SPEED 2***) equal to that speed. This should be somewhere in the 50% range.
7. Open the damper to the position which satisfies the highest ventilation requirement running speed 2 fan speed, and then set the User Minimum Position Damper Position 2 (***MIN POS DAMP 2***) to this damper position.
8. Set the fan speed to a realistic operating speed in the low-range, and then set the User Minimum Position Speed 3 (***MIN POS SPEED 3***) equal to that speed. This should be lowest fan speed in planned operating range, typically the vent speed.
9. Open the damper to the position which satisfies the highest ventilation requirement running speed 3 fan speed, and then set the User Minimum Position Damper Position 3 (***MIN POS DAMP 3***) to this damper position.

The shape of the curves in Fig. 11 are determined by the configuration parameters: User Minimum Position Speed 1 (***MIN POS SPEED 1***), User Minimum Position Damper Position 1 (***MIN POS DAMP 1***), User Minimum Position Speed 2 (***MIN POS SPEED 2***), User Minimum Position Damper Position 2 (***MIN POS DAMP 2***), User Minimum Position Speed 3 (***MIN POS SPEED 3***), User Minimum Position Damper Position 3 (***MIN POS DAMP 3***), and Economizer minimum at maximum fan speed (***MIN POS → MAX FAN***). These configurations are preset at the factory of default purposes. The Economizer minimum at maximum fan speed (***MIN POS → MAX FAN***) should be changed based on the air balance of the unit for proper ventilation.

The user adjustable points discussed above are defaulted to zero from the factory which forces the control to use a set of default points. The default points should not be left for permanent operation, as it may cause inadequate ventilation. Economizer minimum at maximum fan speed (***MIN POS → MAX FAN***) and at

least one set of user points User Minimum Position Speed 1 (***MIN POS SPEED 1***) and User Minimum Position Damper Position 1 (***MIN POS DAMP 1***) should be used to create a linear curve to cover the broad scope of fan operation.

Free Cooling

The economizer will be enabled for cooling (***OK TO FREE COOL? = Yes***) if the supply air temperature sensor reading is valid, there are no applied lockouts, and economizer is operational. Economizer Operational (***ECON OPERATIONAL?***) indicates if an economizer is installed (***VENT METHOD = ECON***) and feedback indicates it is operational. The three economizer lockouts that determine if free cooling should be used to help with cooling are: Dry Bulb Lockout (***DRY BULB LOCKOUT***), Enthalpy Lockout (***ENTHALPY LOCKOUT***), and Unoccupied Free Cooling Lockout (***UFC LOCKOUT?***). Any one of these lockouts will disable economizer free cooling. See below for how each lockout occurs.

When the economizer is available for free cooling (***OK TO FREE COOL? = Yes)*** and the compression is not on, the damper will start opening from the damper's minimum Position in Effect (***EFFECTIVE MIN POS***) based on the supply air temperature (***SUPPLY AIR TEMP***) to provide free cooling. A low cooling demand (***DEMAND = LOW COOL***) will utilize the Low Free Cooling SAT Setpoint (***LOW COOL SAT SP***) as the Free Cooling Setpoint (***FREECOOL SAT SP***) to control the economizer. A medium or high cooling demand (***DEMAND = HIGH COOL***) will utilize the High Free Cooling SAT Setpoint (***HIGH COOL SAT SP***) as the Free Cooling Setpoint (***FREECOOL SAT SP***) to control the economizer.

During free cooling the fan will start at the dedicated free cooling speed (***FREE COOL IDF SPD***). After the economizer (***ECON CMD POSITION***) reaches 100% (or Max) for 5 minutes, the fan will be changed to the High Cool Speed (***HIGH COOL IDF SPD***). When a high cooling demand (***DEMAND = HIGH COOL***) is active the control will use the High Cool Speed (***HIGH COOL IDF SPD***). The compressor will be allowed for use after the fan and economizer are 100% (or Max) for 5 minutes. Once compression is turned on the economizer and fan will remain at 100% until the call for cooling is removed or until the unit is no longer allowed to free cool (***OK TO FREE COOL = No***).

DRY BULB LOCKOUT

Dry Bulb Lockout (***DRY BULB LOCKOUT***) occurs when any of the following are true:

- The Outdoor Air Temperature (***OUTDOOR AIR TEMP***) is invalid.
- When Differential Dry Bulb Control is disabled (***DIFF DRY BULB CTL = Disable***) and the Outdoor Air Temperature (***OUTDOOR AIR TEMP***) is greater than the configured Free Cooling Maximum Temperature (***FREE COOL MAX OAT***) or less than the configured Free Cooling Minimum Temperature (***FREE COOL MIN OAT***).
- When Differential Dry Bulb Control is enabled (***DIFF DRY BULB CTL = Enable***) and the return air temperature (***RETURN AIR TEMP***) plus the Differential Dry Bulb deadband (***DIFF DB DEADBAND***) is lower than the outdoor air temperature (***OUTDOOR AIR TEMP***).

ENTHALPY LOCKOUT

The control uses the Outdoor Air Temperature (***OUTDOOR AIR TEMP***), Outdoor Relative Humidity (***OARH LEVEL***), and Barometric Pressure (***BAROMETRIC PRESS***) to calculate the Outdoor Enthalpy (***OUTDOOR ENTHALPY***). The control uses the Return Air Temperature (***RETURN AIR TEMP***), Return Relative Humidity (***RARH LEVEL***), and Barometric Pressure (***BAROMETRIC PRESS***) to calculate the Return Enthalpy (***RETURN ENTHALPY***). Enthalpy Lockout (***ENTHALPY LOCKOUT***) occurs when any of the following are true:

- When Differential Enthalpy Control is disabled (***DIFF ENTHALPY CTL = Disable***) and the outdoor enthalpy (***OUTDOOR ENTHALPY***) is greater than the Maximum Outdoor Enthalpy limit (***ENTHALPY HI LIMIT***).
- When Differential Dry Bulb Control is enabled (***DIFF DRY BULB CTL = Enable***) and the outdoor enthalpy (***OUTDOOR ENTHALPY***) is greater than the return enthalpy (***RESTURN ENTHALPY***). The Differential Enthalpy deadband (***ENTHALPY DEADBAND***) is use in the case of unlocking the Enthalpy lockout (***ENTHALPY LOCKOUT***).
- The Enthalpy switch input (***ENTHALPY SWITCH***) is reading high.

UNOCCUPIED FREE COOLING LOCKOUT

Unoccupied Free Cooling lockout (***UFC LOCKOUT?***) occurs when the unit is in the unoccupied period (***OCCUPIED NOW? = No***) and the Outdoor Air Temperature (***OUTDOOR AIR TEMP***) is less than the Unoccupied Free Cooling low temperature (***UFC LOW TEMP***).

Unoccupied Free Cooling

The unoccupied free cooling algorithm attempts to maintain the building space half way between the Occupied Cool Set Point (***OCC COOL SETPOINT***) and Occupied Heat Set Point (***OCC HEAT SETPOINT***) using only the economizer when the conditions in the building and the outdoors are suitable, during unoccupied periods. Three different points define this algorithm: Unoccupied Free Cooling configuration (***WHEN TO UNOCC FC***), Free Cooling Preoccupancy Time configuration (***UFC PREOCC TIME***), and Free cooling allowed (***OK TO FREE COOL?***).

WHEN TO UNOCC FC = 0 (Disabled)

Free Cooling will only occur if the space exceeds the unoccupied setpoints.

WHEN TO UNOCC FC = 1 (Preoccupancy)

Unoccupied free cooling can only occur when the time until the next occupied period is less than the Unoccupied Free Cool Pre-Occupancy Time (***UFC PREOCC TIME***) in minutes.

WHEN TO UNOCC FC = 2 (Unoccupied)

Unoccupied free cooling can occur throughout the entire unoccupied period. The space temperature must be higher then the mid-point between the occupied cooling and heating setpoints.

Power Exhaust

Power Exhaust is a function used to assist in the building exhaust air if the barometric relief damper is not enough. It can be one or two motors which can be controlled independently to provide 2 stages of exhaust. These two power exhaust stages are controlled by relays on the Main Base board, and therefore need to be configured on relay channels. To assign the channels set the ***PE1 RELAY CHANNEL*** and ***PE2 RELAY CHANNEL*** as needed.

NOTE: Factory installed power exhaust is only one channel and is on Relay 06.

When a power exhaust 1 relay channel is configured, the control will create a PE1 curve, example shown in Fig. 12. This curve is created by applying the difference of the power exhaust stage 1 at maximum fan speed (***PE1 POS → MAX SPD***) and the Economizer minimum at maximum fan speed (***MIN POS → MAX FAN***) in relationship to the minimum position curve. When a power exhaust 2 relay channel is configured, the control will create a PE2 curve, example shown in Fig. 12. This curve is created by applying the difference of the power exhaust stage 2 at maximum fan speed (***PE2 POS → MAX SPD***) and the Economizer minimum at maximum fan speed (***MIN POS → MAX FAN***) in relationship to the minimum position curve.

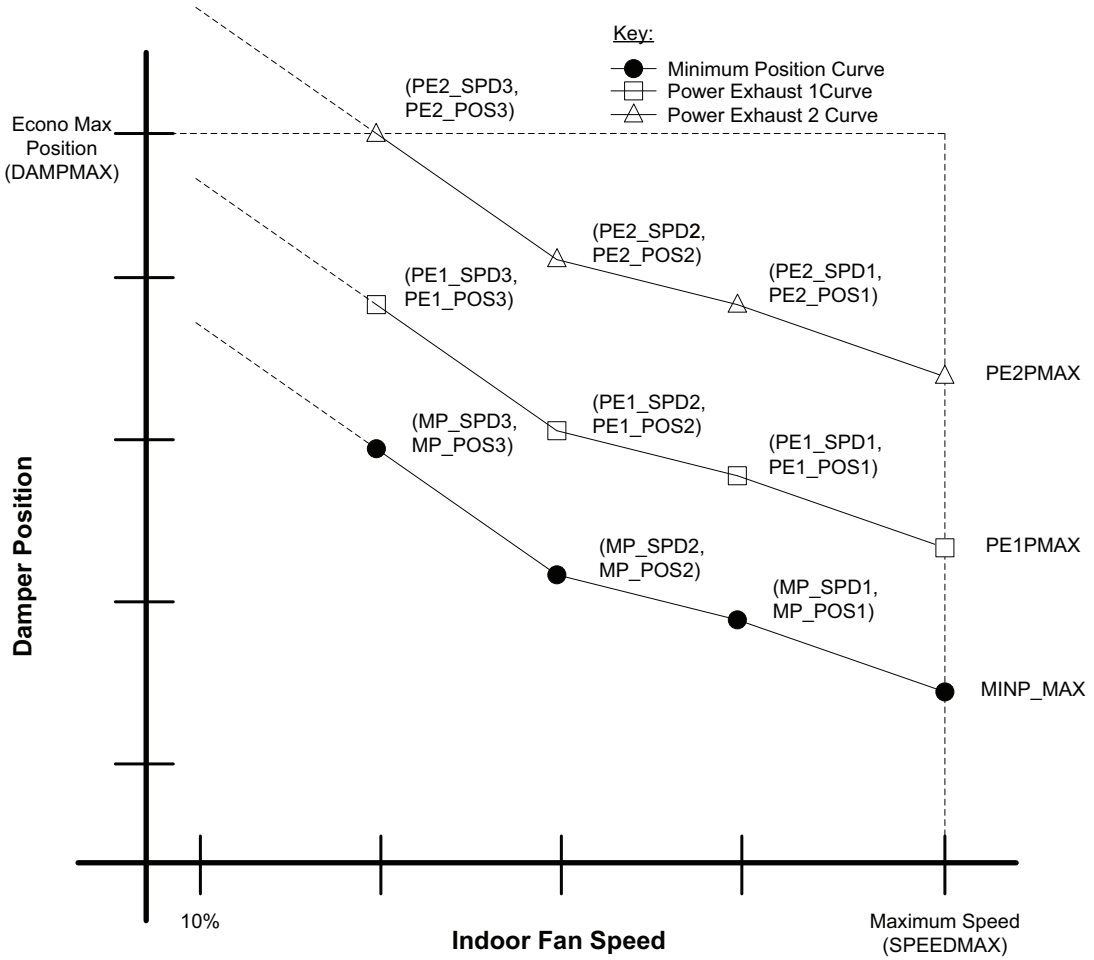

Fig. 12 — Power Exhaust Operation Curves

Power exhaust 1 (***PE1 RELAY***) and power exhaust 2 (***PE2 RELAY***) are controlled using their respective curves as a threshold. When the operating point of the Commanded Fan Speed (***IDF SPEED OUTPUT***) and Economizer Commanded Position (***ECON CMD POSITION***) is above the power exhaust 1 curve, the Power exhaust 1 (***PE1 RELAY***) will be turned on. When the operating point falls below the curve minus the power exhaust turn off deadband (***PE OFF DEADBAND***) the Power exhaust 1 (***PE1 RELAY***) will be turned off. Power exhaust 2 operates the same as Power exhaust 1 except using the PE2 curve.

Indoor Air Quality (IAQ)

Indoor air quality is typically measured using a CO_2 sensor whose measurements are displayed in parts per million (ppm). Outdoor air quality may be measured with a CO_2 sensor for indoor-outdoor differential demand ventilation control. The factory-installed indoor air quality CO_2 sensor is mounted in the return section. A field-installed indoor air quality CO_2 sensor may be mounted in the return or in the occupied space. The indoor air quality modes of operation can be affected by the IAQ Analog Input Config (***ANALOG IAQ CTRL***) and other related and limit configurations as described below.

IAQ (ANALOG INPUT)

When IAQ assigned channel (***IAQ SENSOR CHAN***) is set for an analog input that input channel will be mapped to the Indoor Air Quality (***IAQ LEVEL***). The control is configured for indoor air quality sensors which provide 4 to 20 mA signal for 0 to 2000 ppm CO_2. If the sensor being used has a different range, the ppm display range must be reconfigured by entering new values for the IAQ Sensor Value at 4mA (***IAQ PPM → 4MA***) and IAQ Sensor Value at 20mA (***IAQ PPM → 20MA***).

ANALOG IAQ CTRL = 0 (No IAQ)

This signifies that there is no IAQ sensor installed. The economizer damper will operate based on the minimum position curve.

ANALOG IAQ CTRL = 1 (DCV)

During Demand Controlled Ventilation (DCV), the damper modulates on or between two ventilation curves depending upon the difference between the Indoor Air Quality (***IAQ LEVEL***) and the Outdoor Air Quality (***OAQ LEVEL***). The lower of these two curves is referred to as the IAQ Minimum Position Curve, and the higher curve is the Minimum Position curve discussed in the Minimum Ventilation section under Economizer Operation. Refer to that section on how the minimum Position curve is created. See Example Curves in Fig 11.

The IAQ Minimum Position curve is created by applying the difference of the IAQ position at maximum fan speed (***IAQ POS → MAX SPD***) and the Economizer minimum at maximum fan speed (***MIN POS → MAX FAN***) in relationship to the minimum position curve. The IAQ position at maximum fan speed (***IAQ POS → MAX SPD***) should be set to an economizer position that brings in enough fresh air to remove contaminates and CO_2 generated by sources other than people. The Economizer minimum at maximum fan speed (***MIN POS → MAX FAN***) should be set to an economizer position that brings in fresh air to remove contaminates and CO_2 generated by all sources including people when the indoor fan is operating at the IDF Maximum Fan Speed (***MAXIMUM IDF SPEED***). The Economizer minimum at maximum fan speed (***MIN POS → MAX FAN***) value is the design value for maximum occupancy.

The economizer Min Position in Effect (***EFFECTIVE MIN POS***) will follow the IAQ Minimum Position curve while the Indoor Air Quality level (***IAQ LEVEL***) is less than the Outdoor Air Quality Level (***OAQ LEVEL***). The control will begin to open the damper more than the IAQ Minimum Position curve when the IAQ level begins to exceed the OAQ level by a configurable amount. This amount is referred to as AQ Differential Low (***LOW AIR.Q DIFF***). When the differential between IAQ and OAQ reaches AQ Differential High (***HIGH AIR.Q DIFF***), the economizer Min Position in Effect (***EFFECTIVE MIN POS***) will follow the Minimum Position Curve. When the IAQ/OAQ differential is between AQ Differential Low (***LOW AIR.Q DIFF***) and AQ Differential High (***HIGH AIR.Q DIFF***), the control will modulate the damper between the IAQ Minimum Position Curve and the Minimum Position Curve in a linear manner as shown as the shaded area in Fig. 11. As a simple example Fig. 13 shows the Min Position in Effect (***EFFECTIVE MIN POS***) relationship while the Commanded Fan Speed (***ECON CMD POSITION***) is held at the maximum speed.

ANALOG IAQ CTRL = 2 (Override IAQ)

Override IAQ is reserved for a future release.

ANALOG IAQ CTRL = 3 (Control Minimum Position)

An external 4 to 20 mA source is used to set the Min Position in Effect (***EFFECTIVE MIN POS***). The 4mA signal corresponds to 0% and the 20 mA signal corresponds to 100%. In this mode, configuration such as Economizer minimum at maximum fan speed (***MIN POS → MAX FAN***), IAQ position at maximum fan speed (***IAQ POS → MAX SPD***) and the economizer minimum position and DCV minimum position curves in Fig. 11 and Fig. 13 are not used. If the indoor fan is not operating, the economizer position will be zero. The actual damper position may exceed the economizer Min Position in Effect (***EFFECTIVE MIN POS***) to provide economizer cooling.

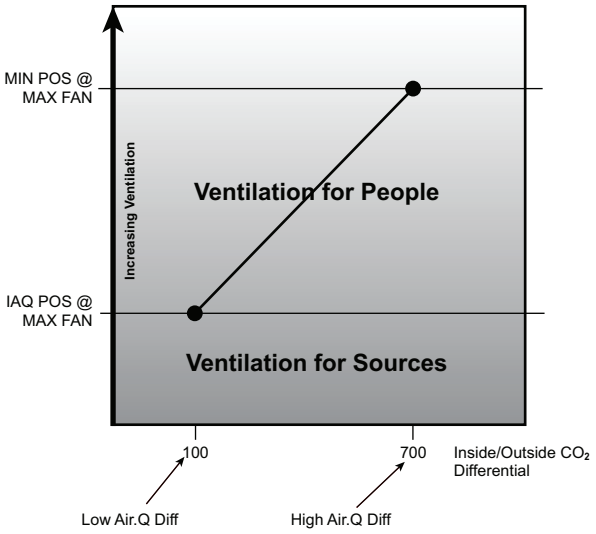

Fig. 13 — Example

OUTDOOR AIR QUALITY (ANALOG INPUT)

The default for the Outdoor Air Quality (***OAQ LEVEL***) is 400 ppm CO_2 when the OAQ sensor is not assigned an input channel. When OAQ Assigned channel (***OAQ SENSOR CHAN***) is set for an analog input that input channel will be mapped to the Outdoor Air Quality (***OAQ LEVEL***). The outdoor air quality sensor provides a 4 to 20 mA signal corresponding to 0 to 2000 ppm CO_2. If a field supplied sensor has a different range, the ppm display range must be reconfigured by entering new values for the OAQ Sensor Value at 4mA (***OAQ PPM → 4MA***) and OAQ Sensor Value at 20mA (***OAQ PPM → 20MA***).

Pre-occupancy Purge

The control has the option for a pre-occupancy purge to refresh the air in the space prior to occupancy. This feature is enabled by setting ***PREOCC PURGE ENBL*** to Yes. This function is also referred to as the IAQ purge function.

The IAQ Purge will operate under the following conditions:

- Purge is enabled
- the unit is in the unoccupied state
- Current Time is valid
- Next Occupied Time is valid
- time is one hour prior to next occupied period
- the OAT is greater than the lockout (***PREOCC LOW LIMIT***)

The IAQ Purge Position curve is created by applying the difference of the IAQ purge position at maximum fan speed (***PURGE POS → MAX***) and the Economizer minimum at maximum fan speed (***MIN POS → MAX FAN***) in relationship to the minimum position curve. The IAQ purge position at maximum fan speed (***PURGE POS → MAX***) should be set to an economizer position that brings in enough fresh air over an hour period to remove contaminates and CO_2 during the unoccupied period. When the preoccupancy purge function is active (***IN PREOCC PURGE?***), the economizer Min Position in Effect (***EFFECTIVE MIN POS***) will follow the IAQ Purge Position curve.

Temperature Compensated Start

Space control set points are usually set to 2 different levels for unoccupied period and occupied period. Unoccupied set points saves energy, while occupied set points provide occupant comfort. The time period it takes for the RTU to bring the space from its current condition in unoccupied mode to its occupied set point is referred to as start bias time, or bias time. The algorithm to calculate this bias time is called Temperature Compensated Start. This is required for ASHRAE 90.1 compliance. When temperature compensated start is running (***TCS ACTIVE?***) the control uses the occupied set points to control the space.

When Temperature compensated start is enabled (***ADAPTIVE TCS?***), no other configuration parameters are needed for this algorithm, because the algorithm will automatically adjust the Bias Time based on the data collected during the period of last time optimal start. The inputs to the calculation algorithm includes space temperature, unoccupied set points, occupied set points, outdoor air temperature, and supply air temperature. Bias time is changed dynamically per RTU operation.

When Temperature compensated start is disabled (***ADAPTIVE TCS?***), the control will use the User Temperature compensated Start bias time (***USER TCS BIASTIME***) in determining when to start controlling to the occupied set points. If the User Temperature compensated Start bias time (***USER TCS BIASTIME***) is set to zero, the control will switch to the occupied setpoints at the time of occupancy.

Smoke Control

There are four smoke control modes that can be used to control smoke within areas serviced by the unit: Pressurization mode, Evacuation mode, Smoke Purge mode, and Fire Shutdown. Evacuation, Pressurization and Smoke Purge modes are post event clean up modes, while Fire Shutdown is a detection and prevention mode. All four functions are configurable on any of the switch input channels. These functions can also be triggered through building commands. Refer to the Configurable Inputs and Outputs section for more details on inputs.

Multiple smoke inputs are handled in a priority scheme. Fire Shutdown is the highest priority and will override all other smoke control. The three other modes are in the following priority order: Evacuation, Purge, then Pressurization.

FIRE SHUTDOWN MODE

This mode will cause an immediate and complete shutdown of the unit.

EVACUATION MODE

This mode attempts to lower the pressure of the space to prevent infiltrating an adjacent space with its smoke. Closing the economizer (thereby opening the return air damper), turning on the power exhaust and shutting down the indoor fan decrease pressure in the space.

SMOKE PURGE MODE

This mode attempts to draw out smoke from the space after the emergency condition. Opening the economizer (thereby closing the return-air damper), turning on both the power exhaust and indoor fan will evacuate smoke and bring in fresh air.

PRESSURIZATION MODE

This mode attempts to raise the pressure of a space to prevent smoke infiltration from an adjacent space. Opening the economizer (thereby closing the return air damper), shutting down power exhaust and turning the indoor fan on will increase pressure in the space.

Airflow Control During the Fire/Smoke Modes

All non-smoke related control outputs will get shut down in the fire/smoke modes. Those related to airflow will be controlled as explained below. The following matrix specifies all actions the control shall undertake when each mode occurs.

DEVICE	FIRE SHUTDOWN	EVACUATION	PURGE	PRESSURIZATION
Economizer	Off	EVAC WITH DAMPER[a]	100% open	100% open
Power Exhaust 1 and 2	Off	On	On	Off
Indoor Fan	Off	Off	IDF MAX SPEED	IDF MAX SPEED
All other components	Off	Off	Off	Off

NOTE(S):

a. ***SETTINGS → UNIT CONFIGURATIONS → GENERAL → EVAC WITH DAMPER*** is a unit configuration that determines what the economizer damper does during the Evacuation smoke control mode. When set to yes the damper will open during Evacuation mode. When set to no, the damper will be closed during Evacuation mode.

NOTE: The importance of the ***EVAC WITH DAMPER*** setting depends on the intent of the Evacuation function. The tradition building Evacuation mode would be best with the off as it is using other spaces pressurization to help move the air. To truly help evacuate the direct space this setting should be yes.

Linkage

The SystemVu controller will support 3V, VAV and VVT zoning system on a CCN system or Open VVT and VAV systems on a BACnet MS/TP System. All that is required is to configure the Open or 3V Master zone to use the SystemVu rooftop unit as its air source. The SystemVu control will need to be configured for the proper network protocol (***BAS PROTOCOL***) and set for Space Sensor Control (***UNIT CTRL TYPE***). The SystemVu controller will reply to the zoning system and change its operating parameters to meet the demand of the zoning system. Status of this process can be viewed in the airside linkage tab of the property pages in the i-Vu application or by viewing the linkage maintenance table with a CCN tool.

Carrier Comfort Network (CCN) Operation

The SystemVu controller can be configured to connect to a CCN system. The SystemVu controller has one RS-485 BMS port that can be configured from the local display for BACnet or CCN. The BMS configuration parameters can be found in the ***SETTINGS → NETWORK SETTINGS*** submenu. The first configuration is the BMS system, for CCN systems change this configuration from NONE to CCN then set the CCN BAUD rate, the bus and element number and you will be able to find the controller with any CCN tool then upload the CCN tables in the controller for use by the tool.

BACnet Network Operation

The SystemVu controller is ready to connect to BACnet. The SystemVu controller has one RS-485 BMS port that can be configured from the local display for BACnet or CCN. The default setting is ***NONE*** and the Default BACnet Baud rate is 76800. These settings are found on the ***SETTINGS → NETWORK SETTINGS*** submenu of the local display. There are four other settings for i-Vu compatibility and for setting the device ID and MAC address of the controller. See the table below for assistance.

Before connecting to the BACnet system determine the system requirements and use the following guide to configure the BACnet settings. Then power the controller down, connect to the BACnet MS/TP network and you are ready to discover your controller.

For i-Vu systems with auto addressing desired the controller is already set with the defaults from the factory ready to connect to this type of system; just set the MAC address of the controller from 0 to 99 and then power down and connect to the network. The router will find and send the network number to the controller and the controller will set it device ID with the network base appended by the Mac address.

For i-Vu and other BACnet systems when it is required to send the device ID to the controller change the ALC/i-Vu auto ID scheme to no and set the MAC address from 0 to 99 like before. Then connect to the network and write the device ID to the controller at the MAC address you set. The controller will accept and retain the device ID written to the device ID property of the object ID.

To manually set the device ID from the local display set the BACnet auto/manual to manual. This allows use of the full range of 1 to 127 for the MAC address and set the device ID in the BACnet ID selection of the local display. It can only be set from the local display and will not accept a write to the device ID property in the object ID.

BACnet ID AUTO/MANUAL	i-VU AUTO SCHEME	HOW DEVICE IS DERIVED	MAC RANGE
Manual	ON or OFF	Local display BACnet Id-BACNet Writes not allowed	0-127
Auto	OFF	Device Id Prefix + Mac - BACnet writes allowed	0-99
Auto	ON	Device Id Prefix + MAC (prefix updated by color cache) - BACnet writes not allowed	0-99

Alarm Handling

There are a variety of different alerts and faults in the system, the term alarm is used to reference alerts and faults. Alerts are indicated by AXXX (where XXX is the alert number) on the display and generally signify a warning of some sort or the improperly functioning circuit can restart without human interaction. If an fault occurs, indicated by FXXX (where XXX is the fault number), a major function of the unit is inoperable or the damaged circuit will generally not restart without an alarm reset via the display or CCN.

The response of the control system to various alerts and faults depends on the seriousness of the particular alert or fault. In the mildest case, an alert does not affect the operation of the unit in any manner. An alert can also cause a "strike." A "striking" alert will cause the circuit to shut down for 15 minutes. This feature reduces the likelihood of false alarms causing a properly working system to be shut down incorrectly. If three strikes occur before the circuit has an opportunity to show that it can function properly, the circuit will strike out, causing the shutdown fault for that particular circuit. Once activated, the shutdown fault can only be cleared via an alarm reset.

However, circuits with strikes will be given an opportunity to reset their strike counter to zero. As discussed above, a strike typically causes the circuit to shut down. Fifteen minutes later, that circuit will once again be allowed to run. If the "troubled" circuit runs continuously for a user defined time (***SETTINGS → UNIT CONFIGURATIONS → COOLING → STRIKE CLEAR TIME***) with no detectable problems the strike counter will be reset to zero. Default value is 5 minutes.

ALARM RELAY OUTPUT

The alarm relay output is a configurable normally open 24-VAC output defaulted to relay 11 on the Main Base Board (MBB) TB2 connector. Selection of which alerts and faults will result in closing of the alarm relay may be set in the Alarm Relay Configuration (***SETTINGS → UNIT CONFIGURATIONS → ALARM RELAY***). Setting a configuration to YES will result in the alarm output relay to energize when that particular condition is in an alarm state. Setting a configuration to NO will result in no action by the alarm output relay for that particular condition.

NOTE: An accessory filter switch can be used along with the alarm relay output function to indicate dirty filter service need. See the Troubleshooting section for more information on viewing, diagnosing, and clearing alerts and alarms.

TROUBLESHOOTING

The SystemVu display shows actual operating conditions of the unit while it is running. If there are alarms or there have been alarms, they will be displayed in either the active faults, active alerts, or the history alarm list (see Table 15 starting on page 37). Service Test mode allows proper operation of the compressors, fans, and other components to be checked while the unit is not operating. See Service Test (on page 13).

Complete Unit Stoppage

There are several conditions that can cause a complete unit stoppage, including:

- A fault is active which causes the unit to shut down.
- Cooling and heating loads are satisfied.
- Programmed occupancy schedule.
- General power failure.
- Tripped 24-volt transformer circuit breakers.
- Blown fuse or circuit breakers
- Unit is turned off through the network.

Restart Procedure

Before attempting to restart the machine, check the faults and alerts list to determine the cause of the shut down. If the shutdown fault for a particular control function has occurred, determine and correct the cause before allowing the unit to run under its own control again. When there is problem, the unit should be diagnosed in Service Test mode. The faults must be reset before the control function can operate in either Normal mode or Service Test mode.

Faults and Alerts

VIEWING AND CLEARING UNIT ALARMS

Presence of active alarms will be indicated on the SystemVu display by the Alarm Status lights. When alerts are active the yellow "ALERT" light will be lit. When faults are active the red "FAULT" light will be lit. When the unit is operational, then green "RUN" light will be lit. The SystemVu controller standby screen will be updated with the active alarms for easy access. Presence of active alarms may also be signaled on the Alarm Output terminals. Each alarm may also be broadcast on the CCN network. Active alarms and past alarm history can be reviewed and cleared via the local display or a network device. The following menu locations are used for the local display:

ACTIVE FAULTS

Displays the list of active faults in order of occurrence.

ACTIVE ALERTS

Displays the list of active alerts in order of occurrence.

HISTORY

Displays the list of active and previously active faults and alerts in order of occurrence with time and date.

RESET FAULTS/ALERTS

User command to manually reset faults and alerts.

Each alarm can have up to 3 data points stamped along with date and time to assist in troubleshooting. Pressing ENTER on the alarm or expanded screen will provide these data points.

DIAGNOSTIC ALARM CODES AND POSSIBLE CAUSES

Fault F010 — MBB LOW VOLTAGE

This fault occurs when the MBB supply voltages falls below 17 volts AC. When this occurs the control will shut down the unit. This will automatically clear when the supply voltage rises above 19 volts AC. The cause of this fault is usually a brownout condition, low supply voltage, or supply power missing a phase.

Fault F011 – MBB REFERENCE VOLTAGE

This fault occurs when the MBB internal microprocessor's DC reference voltages is out of range.When this occurs the control will shut down the unit. This will automatically clear when the DC reference voltage goes back in range. The cause of this fault is usually a MBB failure or supply voltage out of range.

Alert A012 – MBB ZERO CROSSING

This alert occurs when the MBB supply voltage frequency is out of range. When this occurs the control will issue an alert. This will automatically clear when the supply voltage goes back in range. The cause of this alert is usually a MBB failure or supply voltage frequency to high or to low.

Fault F013 – MBB FUSE 2 OPEN

This fault occurs when the MBB's internal fuse number 2 exceeds threshold temperature. When this occurs the control will shut down the unit. This will automatically clear when the fuse temperature gets back in range. The cause of this fault is usually a switch input has a wiring error (short) or the switch pulled too much current. Discrete input number 2 and Fire Shutdown input are connected to fuse 2.

Fault F014 – MBB FUSE 3 OPEN

This fault occurs when the MBB's internal fuse number 3 exceeds threshold temperature. When this occurs the control will shut down the unit. This will automatically clear when the fuse temperature gets back in range. The cause of this fault is usually a switch input has a wiring error (short) or the switch pulled too much current. Configurable discrete input numbers 12, 13, and 14 are connected to fuse 3.

Alert A015 – MBB RNET VOLTAGE RANGE

This alert occurs when the MBB's Rnet 12 volt output is out of range. When this occurs the control will issue an alert, and any accessory connected to the Rnet plug may not operate properly. This will automatically clear when the voltage goes back in range. The cause of this alert is usually a MBB failure or supply voltage out of range.

Alert A016 – MBB 24VDC RANGE

The Alert A016 is an indicator that the MBB's 24vdc output falls below 17 volts DC. When this occurs, the control will put the Analog Input (AI) numbers 06, 07, and 08 into error state. This will automatically clear when the voltage rises above 19 volts DC. The cause of this alert can be a defect on one of the AI 06, 07, 08 devices, a low voltage control transformer defect, an issue with the incoming supply voltage being out of range, or a MBB voltage regulator circuit failure.

NOTE: Check the above items in order.

A serious defect on one of the AI 06, 07, 08 devices can also trigger any of the following alerts: A160, A161, A162, A163, A168, A169. If any of these alerts are observed in conjunction with an A016 alert, the affected device should be replaced.

For troubleshooting purposes, the wires for AI 06,07,08 terminate on the MBB per the Table 9 on page 17.

Alert A017 – MBB 5VDC RANGE

This alert occurs when the MBB's 5vdc output falls below 4.5 volts DC. When this occurs the control will put the Transducer inputs into error state. This will automatically clear when the voltage rises above 4.5 volts DC. The cause of this alert is usually a MBB failure or supply voltage out of range.

Fault F018 – MBB EEPROM FAILURE

The unit will completely shut down. The serial EEPROM chip on the MBB which stores the unit's configuration is not responding. Recovery is automatic but MBB board replacement may be necessary. Cycling the power to the control should be tried before board replacement.

Alert A019 – MBB CLOCK FAILURE

The alert occurs when the RTC clock chip on the MBB is not responding. Time and date functions will not operate, such as local occupancy schedules. The unit will default to 24/7 unoccupied mode. Recovery is automatic but MBB board replacement may be necessary. Cycling power to the control and reconfiguring the time and date should be tried before board replacement.

Fault F020 – SOFTWARE ERROR

The unit will completely shut down. The software on the MBB is not responding. Recovery is automatic if the software is able to reset the board but software change may be necessary. Cycling the power to the control should be tried before board replacement.

Alert A100 – SAT SENSOR FAILURE

This alert occurs when the fan supply temperature sensor is in an error state. Economizer cooling cannot occur while this alert is active. The unit will not be able to honor SAT limits. This alert resets automatically. The cause of the alert is usually a faulty thermistor, a shorted or open thermistor caused by a wiring error, or a loose connection.

Alert A101 – FST SENSOR RANGE

This alert occurs when the fan supply temperature sensor is outside the range –40°F to 245°F (–40°C to 116°C). This alert resets automatically. The cause of the alert is usually a faulty thermistor, a shorted or open thermistor caused by a wiring error, or a loose connection.

Alert A102 – FST OPEN SENSOR

This alert occurs when the fan supply temperature sensor reads as an open circuit. This alert resets automatically. The cause of the alert is usually a faulty thermistor or an open thermistor caused by a wiring error, or a loose connection.

Alert A103 – FST SHORTED SENSOR

This alert occurs when the fan supply temperature sensor reads as a short circuit. This alert resets automatically. The cause of the alert is usually a faulty thermistor or a shorted thermistor caused by a wiring error, or a loose connection.

Alert A104 – OAT SENSOR RANGE

This alert occurs when the outdoor air temperature is outside the range –40°F to 245°F (–40°C to 116°C). All ambient temperature lockout limits for cooling and heating are ignored. All cooling control logic will assume OAT is high. For economizer equipped units, the economizer will not operate to provide cooling. The economizer will still operate for ventilation. The control will use normal operation for outdoor fan control. For units with CCH crankcase heat relay control, the crankcase heat relay will be turned on if any compressor is off. This alert resets automatically. The cause of the alert is usually a faulty thermistor, a shorted or open thermistor caused by a wiring error, or a loose connection.

Alert A105 – OAT OPEN SENSOR

See Alert A104

Alert A106 – OAT SHORTED SENSOR

See Alert A104

Alert A107 - RAT SENSOR RANGE

This alert occurs when the return air temperature is outside the range –40°F to 245°F (–40°C to 116°C). Differential dry bulb crossover control can not occur. Free cooling can only be controlled by the OAT and enthalpy switch. The economizer mechanically disconnected alert will not be diagnosed. This alert resets automatically. The cause of the alert is usually a faulty thermistor, a shorted or open thermistor caused by a wiring error, or a loose connection.

Alert A108 – RAT OPEN SENSOR

See Alert A107

Alert A109 – RAT SHORTED SENSOR

See Alert A107

Alert A110 – SPT SENSOR RANGE

This alert occurs when the temperature is outside the range –40°F to 245°F (–40°C to 116°C). Cooling and heating will not operate. For economizer equipped units, the economizer will still operate for ventilation. This alert resets automatically. The cause of the alert is usually a faulty thermistor in the T-55, T-56, or T-58 device, a shorted or open thermistor caused by a wiring error, or a loose connection.

Alert A111 – SPT OPEN SENSOR

See Alert A110

Alert A112 – SPT SHORTED SENSOR

See Alert A110

Alert A130 – CIR.A SSP SENSOR RANGE

This alert occurs when the pressure is outside the range –6.7 to 420 psig. A circuit cannot run when this alert is active. The cause of the alert is usually a faulty transducer, faulty 5-v power supply, or a loose connection. Use the transducer voltage drop table to determine where the error is introduced.

Alert A131 – CIR.A SSP OPEN SENSOR

See Alert A130

Alert A132 – CIR.A SSP SHORT SENSOR

See Alert A130

Alert A133 – CIR.A SDP SENSOR RANGE

This alert occurs when the pressure is outside the range 14.5 to 667 psig. A circuit cannot run when this alert is active. The cause of the alert is usually a faulty transducer, faulty 5-v power supply, or a loose connection. Use the transducer voltage drop table to determine where the error is introduced.

Alert A134 – CIR.A SDP OPEN SENSOR

See Alert A133

Alert A135 – CIR.A SDP SHORT SENSOR

See Alert A133

Alert 150 - OACFM OPEN SENSOR

This alert occurs when the Outdoor Air CFM sensor input is 0 mA and the sensor is configured and installed. Check sensor and wiring. This alert clears automatically.

Alert 151 - OACFM SHORTED SENSOR

This alert occurs when the Outdoor Air CFM sensor input shorted and the sensor is configured as installed. Check sensor and wiring. This alert clears automatically.

Alert A160 – OARH OPEN SENSOR

This alert occurs when the Outdoor Air Relative Humidity sensor input is 0 mA and the sensor is configured as installed. Outside Air Enthalpy cannot be calculated therefore no enthalpy crossover can be used and only dry bulb will be used in determining free cooling. Check sensor and wiring. This alert clears automatically.

Alert A161 – OARH SHORTED SENSOR

This alert occurs when the Outdoor Air Relative Humidity sensor input shorted and the sensor is configured as installed. Outside Air Enthalpy cannot be calculated therefore no enthalpy crossover can be used and only dry bulb will be used in determining free cooling. Check sensor and wiring. This alert clears automatically.

Alert A162 – RARH OPEN SENSOR

This alert occurs when the Return Air Relative Humidity sensor input is 0 mA and the sensor is configured as installed. Return Air Enthalpy cannot be calculated therefore no differential enthalpy crossover can be used. Dry bulb and single enthalpy will be used in determining free cooling. Check sensor and wiring. This alert clears automatically.

Alert A163 – RARH SHORTED SENSOR

This alert occurs when the Return Air Relative Humidity sensor input shorted and the sensor is configured as installed. Return Air Enthalpy cannot be calculated therefore no differential enthalpy crossover can be used. Dry bulb and single enthalpy will be used in determining free cooling. Check sensor and wiring. This alert clears automatically.

Alert A164 - IAQ OPEN SENSOR

This alert occurs when the IAQ input is 0 mA and the sensor is configured as installed. IAQ operation will be disabled. Check sensor and wiring. This alert clears automatically.

Alert A165 - IAQ SHORTED SENSOR

This alert occurs when the IAQ input is shorted and the sensor is configured as installed. IAQ operation will be disabled. Check sensor and wiring. This alert clears automatically.

Alert A166 - OAQ OPEN SENSOR

This alert occurs when the OAQ input is 0 mA and the sensor is configured as installed. OAQ operation will be disabled. Check sensor and wiring. This alert clears automatically.

Alert A167 - OAQ SHORTED SENSOR

This alert occurs when the OAQ input is shorted and the sensor is configured as installed. OAQ operation will be disabled. Check sensor and wiring. This alert clears automatically.

Alert A168 - SPACE RELATIVE HUMIDITY OPEN SENSOR

This alert occurs when the SPRH input is 0 mA and the sensor is configured as installed. Check sensor and wiring. This alert clears automatically.

Alert A169 - SPACE HUMIDITY SHORTED SENSOR

This alert occurs when the SPRH input is shorted and the sensor is configured as installed. Check sensor and wiring. This alert clears automatically.

Alert A170 – ECON FEEDBACK RANGE

This alert occurs when the Economizer analog feedback signal is outside the range of 1.3vdc to 10.3vdc and the feedback is configured to use. A short is 10.5vdc and an open circuit is less than 0.1vdc. Economizer diagnostics operation will be disabled. This is usually caused by a wiring problem, actuator failure, or the wrong actuator. Investigate using the Low Voltage Schematic; make sure the feedback signal from the actuator is correct. This alert clears automatically.

Alert A171 – ECON FEEDBACK OPEN

See Alert A170

Alert A172 – ECON FEEDBACK SHORTED

See Alert A170

Alert A190 – TSTAT HEAT/COOL CALLS

This alert occurs in Thermostat mode when Y1 or Y2 is energized simultaneously with W1 or W2. Verify thermostat and thermostat wiring. The software will enter either the cooling or heating mode depending upon which input turned on first. This alert resets automatically when Y1 and Y2 are not on simultaneously with W1 and W2.

Alert A191 – TSTAT IMPROPER COOL

This alert occurs in Thermostat mode when Y2 or Y3 is energized and Y1 is not. Verify thermostat and thermostat wiring. When this occurs the control will treat the inputs as a number instead of specific input. Example a Y2 and Y3 would mean 2 cooling inputs so the control would treat that as is a Y1 and Y2 was active. This alert resets automatically when Y1 is turned On.

Alert A192 – TSTAT IMPROPER HEAT

This alert occurs in Thermostat mode when W2 is energized and W1 is not. Verify thermostat and thermostat wiring. When W2 turns On, the software will behave as if W1 and W2 are both On. When W2 turns Off, the software will behave as if W1 and W2 are both Off. This alert resets automatically when W1 is turned On.

Fault F200 – FIRE SHUTDOWN

This fault occurs when the fire shutdown input is either open or closed depending upon its configuration. This fault is usually caused by an auxiliary device that is trying to shut down the unit, e.g., smoke detector. This will cause a unit shutdown condition. Verify that the configuration is set correct, verify the wiring and auxiliary device. This fault resets automatically.

Fault F202 – FREEZE PROTECTION

This fault occurs when the SAT falls below the minimum SAT setting (***UNIT'S MIN SAT***) for 30 seconds. The control will enter the safety shutdown condition. This fault will automatically reset if allowed (***AUTO SAT FAULTS? = YES***) and the SAT rises above the minimum SAT (***UNIT'S MIN SAT***) plus 15. The cause of this fault is usually excessive cold outdoor air, low air flow, or low charge.

Fault F201 – CONDENSATE OVERFLOW

This fault occurs when the COFS input is either open or closed depending upon its configuration. This fault is usually caused by water reaching a high level in the drain pan. This will cause a cooling lockout. Verify that the configuration is set correct, verify the wiring and auxiliary device. This fault resets automatically.

Alert A203 — DIRTY FILTER

This alert occurs when the Filter Status switch senses a plugged filter for 5 continuous seconds after the indoor fan has been running for 10 seconds or if the fan has run for longer than the change filter time. Because the Dirty Air Filter switch can be configured normally opened or closed, the switch might be open or closed. Verify that the configurations are set correct, verify the wiring and filter status switch. The hose should be connected to the low side of the switch. The alert resets automatically if it was tripped due to the filter switch. If the alert is tripped because of the timer, it will need to be reset after the filter has been replaced or inspected. Rest the time with the ***RESET FILTER TIME*** point is located under ***RUN STATUS → GENERAL*** or ***INPUTS→GENERAL INPUTS***.

Fault F204 — REMOTE SHUTDOWN

This fault occurs when the remote shutdown input is either open or closed depending upon its configuration and configured to set a fault. This fault is usually caused by an auxiliary emergency device that is trying to shut down the unit. This will cause a unit shutdown condition. Verify that the configuration is set correct, verify the wiring and auxiliary device. This fault resets automatically.

Fault F205 — IDF MANUAL LIMIT TRIP

This fault occurs when the indoor fan limit device input is lost on the MBB HPS2 terminals. The input device varies depending on the type and size of the unit. It can be a manual reset device with a reset button, an auto reset device, or a safety relay internal to the fan motor, or some combination of these devices. Refer to the specific control wiring diagram for your unit to determine which limit device(s) are present on your unit.

Fault F206 — PHASE MONITOR TRIP

This fault occurs when the phase monitor input is either open or closed depending upon its configuration. This fault is usually caused by loss of phase or improper phasing of a 3 phase power supply. This will cause a unit shutdown condition. Verify that the configuration is set correct, verify the wiring and supply power. This fault resets automatically.

Alert A210 — GENERAL STATUS

This alert occurs when the general status input is either open or closed depending upon its configuration and configured to set a alert. This alert is usually caused by an auxiliary switch device that is trying to send a warning about the unit. Verify that the configuration is set correct, verify the wiring and auxiliary device. This alert resets automatically.

Fault F211 — GENERAL STATUS

This fault occurs when the general status input is either open or closed depending upon its configuration and configured to set a fault. This fault is usually caused by an auxiliary switch device that is trying to shut down the unit. This will cause a unit shutdown condition. Verify that the configuration is set correct, verify the wiring and auxiliary device. This fault resets automatically.

Fault F220 — REFRIGERANT DISSIPATION

The fault occurs when the leak dissipation system is active. The SystemVu MBB determines that the leak dissipation system is active when both DI04 and DI05 are open at the same time. DI04 and DI05 are internal to the SystemVu MBB and are connected to the HPS1 and HPS2 terminals on the bottom of the board. While active the unit will be shutdown in safety mode running the indoor fan at a dedicated speed to dissipate the refrigerant leak. Once the dissipation system clears the safety mode will continue for an additional 5 minutes. The dissipation system will active if it detects a leak, has a sensor fault, has a sensor communication issue, or the test button on the RDB is pressed. This is an automatic reset alarm that will return to normal operation when the situation is resolved. Refer to the base unit installation instructions for more details on the Leak Dissipation System.

Fault F310 — CIRA DOWN DUE TO FAIL

This fault occurs when both compressors on circuit A have 3 strikes. Investigate the alerts that caused the strikes to occur, and correct or test as needed. Manual alarm reset or power cycle is required to rest this fault.

Fault F311 — CIRA LOW CHARGE

This fault occurs when the compressors are off and both the discharge and suction pressure are less than the low charge level (***LOW CHARGE LEVEL***) and OAT is greater than the low charge limit (***NO LOW CHARGE OAT***). The cause of the fault is usually low refrigerant pressure or faulty pressure transducers. This fault only occurs when the compressor is OFF because the low refrigerant pressure alert will handle this situation when the compressor is operating. Manual alarm reset or power cycle is required to rest this fault.

Alert A312 — CIR.A UNEXPECTED OFF

These alerts occur when the suction pressure raises the configured amount and the pressure ratio drop the configured amount both in a 10 second window during compressor operation. When this occurs, the control turns off the compressors and logs a strike for which compressor that was on. This alerts reset automatically. The possible causes are: high-pressure switch (HPS) open (the HPS is wired in series with compressor relays on the MBB), compressor internal protection is open, or a wiring error (a wiring error might not allow the compressor to start). This alert can be enabled and disabled under menu ***SETTINGS→UNIT CONFIGURATION→COMPRESSOR DIAG→COMPRESSOR TRANSITION→DIAG. COMP OFF***.

During mechanical heat while transitioning in and out of defrost mode, this unexpected off alert will wait an additional time (***DEFROST UEOFF DLY***) before tripping to ensure proper transition.

Alert A313 — CIR.A HIGH DISCHARGE

This alert occurs when the discharge high pressure switch opens. This alert resets automatically when the pressure falls below the switch threshold and the switch closes for 3 minutes. The control will add a strike for which ever compressors were on. The control will also set the ODFs to the high cool speed. The cause of the alert is usually an overcharged system, high outdoor ambient temperature coupled with dirty outdoor coil, plugged filter drier, or ODF airflow is set too low.

Alert A314 — CIR.A HPS TRIP

This alert occurs when the discharge high pressure switch opens. This alert resets automatically when the pressure falls below the switch threshold and the switch closes for 3 minutes. The control will add a strike for which ever compressors were on. The control will also set the ODFs to the high cool speed. The cause of the alert is usually an overcharged system, high outdoor ambient temperature coupled with dirty outdoor coil, plugged filter drier, or ODF airflow is too low.

Alert A315 — CIR.A LOW DISCHARGE

This alert occurs when the discharge temperature is less than the OAT plus the configured ***LOW DISCHARGE LEV*** amount. This alert resets automatically. The control will add a strike for which ever compressors were on. The cause of the alert is usually an undercharged system, low outdoor ambient temperature coupled with dirty outdoor coil, plugged filter drier, or ODF airflow is too high. This alert can be enabled and disabled under menu ***SETTINGS → UNIT CONFIGURATION → COMPRESSOR DIAG → CHARGE DIAGNOSTICS → LOW DISCHARGE DIAG***.

Alert A316 — CIR.A LOW SUCTION

This alert occurs when the compressor is operating and the evaporating temperature (converted from the suction pressure) is less than configured low suction control levels, ***LOW SUC LEVEL 1***, ***LOW SUC LEVEL2***, or ***LOW SUC LEVEL3***. The circuit SST value must be less than ***LOW SUC LEVEL 1*** (for 5 minutes), ***LOW SUC LEVEL 2*** (for 4 minutes), or LOW SUC LEVEL 3 (for 3 minutes when using the economizer and 1.5 minutes when not using the economizer) for the alert to occur. When the outdoor temperature is less than 40°F, the above values are reduced 1°F for every 2°F OAT is below 40°F. All the above timers will reset if the suction temperature rises above ***LOW SUC OK TEMP*** for 1 minute. This alert causes a strike for the respective circuit. This alert will activate when the coil becomes frosted. However, during the 15-minute reset period, the coils will thaw and strike should clear and restart if there is nothing else wrong with the circuit. The alert resets automatically. The cause of the alert is usually low refrigerant charge, dirty filters, evaporator fan operating backwards, plugged filter drier, faulty transducer, excessively cold return air, or stuck open economizer when the ambient temperature is low.

This alert will trigger a fan override (***IDF SPD OVERRIDE***) which sets the indoor fan speed to maximum speed. This override will remain active until the HVAC mode is reset.

During mechanical heating there is an additional offset to shift the levels to account for heating lower suctions. The offset (***HEAT LO SUC OFFST***) is defaulted to 30°F to prevent most suction nuisances and should not need to be changed.

Alert A317 — CIR.A PRESSURE RATIO

This alert occurs when the Circuit A pressure ratio is less than the configured ***MIN PRESSURE RATIO*** amount. This alert resets automatically. The control will add a strike for which ever compressors were on. The cause of the alert is usually an undercharged system, low outdoor ambient temperature coupled with dirty outdoor coil, plugged filter drier, or ODF airflow is too high.

Fault F318 – COMPRESSOR STUCK ON

This fault occurs when the Suction pressure does not raise the minimum suction amount (***CIR.A MIN SUC.P***) and the ratio did not fall at least the off pressure ratio (***OFF P.RATIO***). When this occurs, the control turns off all of the compressors, and enters a safety shutdown condition. The possible causes are a welded contactor or frozen compressor relay on MBB. Manual alarm reset or power cycle is required to rest this fault. This fault can be enabled and disabled under menu ***SETTINGS → UNIT CONFIGURATION → COMPRESSOR DIAG → COMPRESSOR TRANSITION → CIR STUCK ON DIAG***.

Fault F319 – C.A1 DOWN DUE TOFAIL

This fault occurs when compressor A1 has 3 strikes. Investigate the alerts that caused the strikes to occur, and correct or test as needed. Manual alarm reset or power cycle is required to rest this fault.

Alert A320 – C.A1 REVERSE ROTATION

This alert occurs when 10 seconds after the compressor turns on, the suction rose and the discharge pressure dropped. This alert causes a strike for the compressor. The alert resets automatically. The cause of the alert is usually compressor wiring causing reverse rotation or a faulty compressor.

Alert A321 – C.A1 FAIL TO PRESSURE

This alert occurs when 10 seconds after the compressor turns on, the suction did not drop more that suction amount (***CIR.A MIN SUC.P***) and discharge pressure did not rise more than discharge amount (***CIR.A MIN DIS.P***). This alert causes a strike for the compressor. The alert resets automatically. The cause of the alert is usually compressor wiring causing reverse rotation or a faulty compressor.

Fault F322 – C.A2 DOWN DUE TO FAIL

This fault occurs when compressor A2 has 3 strikes. Investigate the alerts that caused the strikes to occur, and correct or test as needed. Manual alarm reset or power cycle is required to reset this fault.

Alert A323 – C.A2 REVERSE ROTATION

This alert occurs when 10 seconds after the compressor turns on, the suction rose and the discharge pressure dropped. This alert causes a strike for the compressor. The alert resets automatically. The cause of the alert is usually compressor wiring causing reverse rotation or a faulty compressor.

Alert A324 – C.A2 FAIL TO PRESSURE

This alert occurs when 10 seconds after the compressor turns on, the suction did not drop more than suction amount (***CIR.A MIN SUC.P***) and discharge pressure did not rise more than discharge amount (***CIR.A MIN DIS.P***). This alert causes a strike for the compressor. The alert resets automatically. The cause of the alert is usually compressor wiring causing reverse rotation or a faulty compressor.

Fault F412 – RUN AWAY HEAT

This fault occurs when the SAT rises above the maximum SAT (***UNIT'S MAX SAT***). The control will enter the safety shutdown condition. This fault will automatically reset if allowed (***AUTO SAT FAULTS? = YES***) and the SAT falls below the maximum SAT (***UNIT'S MAX SAT***) minus 50. The cause of this fault is usually heat stuck on causing high SAT, or low air flow.

Alert A510 – INDOOR FAN STATUS

This alert occurs when a fan status switch is installed, the unit is configured not to shut down on fan status, and the fan status switch does not match the state of the fan. The cause of this is usually a configuration error on the switch state in the software or the setting on the actual switch itself.

Fault F511 – IDF OFF WHEN COMMAND ON

This fault occurs when the unit is configured to shut down on fan status and the fan is requested greater than zero and the fan status switch indicates the fan is off. The cause of this fault is usually a configuration error on the switch state in the software or the setting on the actual switch itself. Manual alarm reset or power cycle is required to reset this fault.

Fault F512 – IDF ON WHEN COMMAND OFF

This fault occurs when the unit is configured to shut down on fan status and the fan is requested off and the fan status switch indicates the fan is off. The cause of this fault is usually a configuration error on the switch state in the software or the setting on the actual switch itself. Manual alarm reset or power cycle is required to reset this fault.

Alert A700 – ECON NOT MODULATING

This alert occurs when the economizer feedback is enabled and the actual speed does not reach the commanded speed in the economizer travel time configuration value. This alert will automatically reset when the actual position does reach the commanded position. This is usually caused by installation of the wrong actuator, no economizer gear motion, or actuator direction control switch (CCW, CW) wrong. Check damper blades, gears, and actuator. This alert will usually be accompanied by another descriptive informational alert.

Alert A701 – ECON STUCK CLOSED

This alert occurs when damper not modulating alert is active and actual damper position is zero. This alert will be reset once the damper not modulating alert becomes inactive. This alert will also be reset upon resetting all current alarm commands.

Alert A702 – ECON STUCK OPEN

This alert occurs when damper not modulating alert is active, commanded damper position is zero and actual damper position is greater than two. This alert will be reset once the damper not modulating alert becomes inactive. This alert will also be reset upon resetting all current alarm commands.

Alert A703 – ECON MECH DISCONNECTED

This alert occurs when Alert A700 is not active yet the control determines that the economizer changes are not aligning with the temperature changes. This will require a manual reset to ensure the economizer is inspected. This is usually caused by the actuator not properly secured to the damper shaft.

Alert A710 – ECON NOT COOLING

This alert occurs when freecooling is active, damper modulation alert is active and the actual damper position is less than the requested damper position by two. This alert will be reset once the damper not modulating alert becomes inactive and it is also reset when all the current alarm commands are reset.

Alert A711 – ECON IMPROPER COOLING

This alert occurs when freecooling is inactive, damper modulation alert is active and the actual damper position is greater than minimum position. This alert will be reset once the damper not modulating alert becomes inactive and it is also reset when all the current alarm commands are reset.

Alert A712 – EXCESSIVE OUTDOOR AIR

This alert occurs when freecooling is inactive, damper modulation alert is active and the actual damper position is greater than minimum position. This alert will be reset once the damper not modulating alert becomes inactive and it is also reset when all the current alarm commands are reset.

Table 15 — SystemVu Controller Alarm Codes

FAULT OR ALERT	ACTION TAKEN BY CONTROL	RESET METHOD	PROBABLE CAUSE
F010-MBB LOW VOLTAGE	Unit Shutdown	Automatic	Brownout condition, low supply voltage, supply power missing a phase.
F011-MBB REFERENCE VOLTAGE	Unit Shutdown	Automatic	MBB failure or supply voltage low
A012-MBB ZERO CROSSING	Alert Generated	Automatic	MBB failure or supply voltage frequency to high or too low.
F013-MBB FUSE 2 OPEN	Unit Shutdown	Automatic	A switch input has a wiring error or the switch pulled too much current.
F014-MBB FUSE 3 OPEN	Unit Shutdown	Automatic	A switch input has a wiring error or the switch pulled too much current.
A015-MBB RNET VOLTAGE RANGE	Alert Generated	Automatic	MBB failure or supply voltage low
A016-MBB 24VDC RANGE	4-20mA inputs will be in error	Automatic	Defect on one of the AI 06, 07, 08 devices, low voltage control transformer defect, incoming supply voltage out of range, MBB voltage regulator circuit failure. (Check the above items in the order listed.)
A017-MBB 5VDC RANGE	Transducer inputs will be in error	Automatic	MBB failure or supply voltage low
F018-MBB EEPROM FAILURE	Unit Shutdown	Automatic	Software failure or MBB failure
A019-MBB CLOCK FAILURE	No time, date, and schedule operation	Automatic	Software failure or MBB failure
F020-SOFTWARE ERROR	Unit Shutdown	Automatic	Corrupt Software or software failure
A100-SAT SENSOR ERROR	No free cooling, and no SAT limit protection	Automatic	Faulty, shorted, or open thermistor caused by wiring error or loose connection.
A101-FST SENSOR RANGE	Alert Generated	Automatic	Faulty or incorrect thermistor caused by improper ohm reading
A102-FST OPEN SENSOR	Alert Generated	Automatic	Missing or open thermistor caused by wiring error or loose connection.
A103-FST SHORTED SENSOR	Alert Generated	Automatic	Faulty or shorted thermistor caused by wiring error or loose connection.
A104-OAT SENSOR RANGE	No free cooling, no low ambient operation	Automatic	Faulty or incorrect thermistor caused by improper ohm reading
A105-OAT OPEN SENSOR	No free cooling, no low ambient operation	Automatic	Missing or open thermistor caused by wiring error or loose connection.
A106-OAT SHORTED SENSOR	No free cooling, no low ambient operation	Automatic	Faulty or shorted thermistor caused by wiring error or loose connection.
A107-RAT SENSOR RANGE	No differential DB crossover	Automatic	Faulty or incorrect thermistor caused by improper ohm reading
A108-RAT OPEN SENSOR	No differential DB crossover	Automatic	Missing or open thermistor caused by wiring error or loose connection.
A109-RAT SHORTED SENSOR	No differential DB crossover	Automatic	Faulty or shorted thermistor caused by wiring error or loose connection.
A110-SPT SENSOR RANGE	No heating or cooling	Automatic	Faulty or incorrect thermistor caused by improper ohm reading
A111-SPT OPEN SENSOR	No heating or cooling	Automatic	Missing or open thermistor caused by wiring error or loose connection.
A112-SPT SHORTED SENSOR	No heating or cooling	Automatic	Faulty or shorted thermistor caused by wiring error or loose connection.
A130-CIR.A SSP SENSOR RANGE	Shutdown Circuit A	Automatic	Faulty transducer, faulty 5-V power supply, or loose connection
A131-CIR.A SSP OPEN SENSOR	Shutdown Circuit A	Automatic	Faulty transducer, faulty 5-V power supply, or loose connection
A132-CIR.A SSP SHORT SENSOR	Shutdown Circuit A	Automatic	Faulty transducer, faulty 5-V power supply, or loose connection
A133-CIR.A SDP SENSOR RANGE	Shutdown Circuit A	Automatic	Faulty transducer, faulty 5-V power supply, or loose connection
A134-CIR.A SDP OPEN SENSOR	Shutdown Circuit A	Automatic	Faulty transducer, faulty 5-V power supply, or loose connection
A135-CIR.A SDP SHORT SENSOR	Shutdown Circuit A	Automatic	Faulty transducer, faulty 5-V power supply, or loose connection
A150-OACFM OPEN SENSOR	No OACFM Operations	Automatic	Wiring problem, or configuration error
A151-OACFM SHORTED SENSOR	No OACFM Operations	Automatic	Wiring problem, or configuration error
A160-OARH OPEN SENSOR	No Enthalpy crossover	Automatic	Bad sensor, bad wiring, or sensor configured incorrectly.
A161-OARH SHORTED SENSOR	No Enthalpy crossover	Automatic	Bad sensor, bad wiring, or sensor configured incorrectly.
A162-RARH OPEN SENSOR	No Differential Enthalpy crossover	Automatic	Bad sensor, bad wiring, or sensor configured incorrectly.
A163-RARH SHORTED SENSOR	No Differential Enthalpy crossover	Automatic	Bad sensor, bad wiring, or sensor configured incorrectly.
A164- IAQ OPEN SENSOR	No IAQ Operations	Automatic	Bad sensor, bad wiring, or sensor configured incorrectly.
A165- IAQ SHORTED SENSOR	No IAQ Operations	Automatic	Bad sensor, bad wiring, or sensor configured incorrectly.
A166-OAQ OPEN SENSOR	No OAQ Operations	Automatic	Bad sensor, bad wiring, or sensor configured incorrectly.

Table 15 — SystemVu Controller Alarm Codes (cont)

FAULT OR ALERT	ACTION TAKEN BY CONTROL	RESET METHOD	PROBABLE CAUSE
A167-OAQ SHORTED SENSOR	No OAQ Operations	Automatic	Bad sensor, bad wiring, or sensor configured incorrectly.
A168-SPACE RELATIVE HUMIDITY OPEN SENSOR	No dehumidifying	Automatic	Bad sensor, bad wiring, sensor configured incorrectly, loss of communication to SIOB.
A169-SPACE RELATIVE HUMIDITY SHORTED SENSOR	No dehumidifying	Automatic	Bad sensor, bad wiring, sensor configured incorrectly, loss of communication to SIOB.
A170-ECON FEEDBACK RANGE	No economizer diagnostics	Automatic	Wiring problem with actuator, or configuration error
A171-ECON FEEDBACK OPEN	No economizer diagnostics	Automatic	Wiring problem with actuator, or configuration error
A172-ECON FEEDBACK SHORTED	No economizer diagnostics	Automatic	Wiring problem with actuator, or configuration error
A190-TSTAT HEAT/COOL CALLS	Run unit in mode activated first	Automatic	Bad Thermostat or Thermostat Wiring
A191-TSTAT IMPROPER COOL	Run cooling per number of active inputs	Automatic	Bad Thermostat or Thermostat Wiring
A192-TSTAT IMPROPER HEAT	Run heating per number of active inputs	Automatic	Bad Thermostat or Thermostat Wiring
F200-FIRE SHUTDOWN	Unit Shutdown	Automatic	Smoke detected by smoke detector
F201-CONDENSATE OVERFLOW	Cooling Shutdown	Automatic	Drain pan plugged, sensor error, or configuration error
F202 - FREEZE PROTECTION	Unit Shutdown	Automatic	SAT is too low, caused by cold outdoor air, low air flow, or stuck on cooling.
A203-DIRTY FILTER	Alert Generated	Automatic	Dirty Filter or filter timer expired
F204-REMOTE SHUTDOWN	Unit Shutdown	Automatic	Remote activation of the shutdown switch
F205- IDF MANUAL LIMIT TRIP	Unit Shutdown	Automatic	Indoor fan limit device input lost on the MBB HPS2 terminals
F206-PHASE MONITOR TRIP	Unit Shutdown	Automatic	Power supply phase missing or out of phase
A210-GENERAL STATUS	Alert Generated	Automatic	General Switch activation or wrong configuration
F211-GENERAL STATUS	Unit Shutdown	Automatic	General Switch activation or wrong configuration
F220-REFRIGERANT DISSIPATION	Shutdown in Safety Mode IDF running	Automatic	Refrigerant leak detected, sensor fault or communication issue, or dissipation system in test
F310-CIRA DOWN DUE TO FAIL	Shutdown Circuit A	Manual	Compressors have 3 strikes or has been locked out by another alarm
F311-CIRA LOW CHARGE	Shutdown Circuit A	Manual	Low refrigerant or faulty pressure transducer
A312-CIR.A UNEXPECTED OFF	Strike for active compressors	Automatic	Compressor failure, transducer failure, or nuisance operating conditions
A313-CIR.A HIGH DISCHARGE	Unload compression and up ODF to High cool speed	Automatic	An overcharged system, high outdoor ambient temperature coupled with dirty outdoor coil, plugged filter drier, or ODF too low.
A314-CIR.A HPS TRIP	Add compressor strikes	Automatic	An overcharged system, high outdoor ambient temperature coupled with dirty outdoor coil, plugged filter drier, or ODF too low.
A315-CIR.A LOW DISCHARGE	Add compressor strikes	Automatic	An undercharged system, low outdoor ambient temperature coupled with dirty outdoor coil, plugged filter drier, or ODF too high
A316- CIR.A LOW SUCTION	Add compressor strikes	Automatic	Low refrigerant charge, dirty filters, evaporator fan turning backwards, plugged filter drier, faulty transducer, excessively cold return air, or stuck open economizer when the ambient temperature is low.
A317-CIR.A PRESSURE RATIO	Add compressor strikes	Automatic	Low refrigerant charge, plugged filter drier, faulty transducer, the ambient temperature is low and the ODF is running too fast.
F318-COMPRESSOR STUCK ON	Unit in Safety Shutdown	Manual	Welded contactor or frozen compressor relay on MBB
F319-C.A1 DOWN DUE TO FAIL	Lockout Compressor A1	Manual	Compressor A1 has 3 strikes or has been locked out by another alarm
F322-C.A2 DOWN DUE TO FAIL	Lockout Compressor A2	Manual	Compressor A2 has 3 strikes or has been locked out by another alarm.
A320-C.A1 REVERSE ROTATION	Add Strike for compressor A1	Automatic	Wiring causing reverse rotation or faulty compressor
A321-C.A1 FAIL TO PRESSURE	Add Strike for compressor A1	Automatic	Wiring causing reverse rotation or faulty compressor
A323-C.A2 REVERSE ROTATION	Add Strike for compressor A2	Automatic	Wiring causing reverse rotation or faulty compressor.
A324-C.A2 FAIL TO PRESSURE	Add Strike for compressor A2	Automatic	Wiring causing reverse rotation or faulty compressor.
F412-RUN AWAY HEAT	Unit in Safety Shutdown	Automatic	Heat stuck on causing high SAT, or low air flow
A510- INDOOR FAN STATUS	Alert Generated	Automatic	Motor failure, or configuration error.
F511- IDF OFF WHEN COMMAND ON	Unit Shutdown	Manual	Fan stuck on, or Configuration incorrect.
F512-IDF ON WHEN COMMAND OFF	Unit Shutdown	Manual	Tripped Circuit Breaker. Bad indoor fan motor. Configuration incorrect.
A700-ECON NOT MODULATING	Alert Generated	Automatic	No economizer motion. Check damper blades, gears, and actuator. Actuator direction control switch (CCW, CW) wrong.
A701-ECON STUCK CLOSED	Alert Generated	Automatic	No economizer motion. Check damper blades, gears, and actuator. Actuator direction control switch (CCW, CW) wrong.
A702-ECON STUCK OPEN	Alert Generated	Automatic	No economizer motion. Check damper blades, gears, and actuator. Actuator direction control switch (CCW, CW) wrong.
A703-ECON MECH DISCONNECTED	Alert Generated	Manual	No economizer motion. Check damper blades, gears, and actuator. Actuator direction control switch (CCW, CW) wrong.
A710-ECON NOT COOLING	Alert Generated	Automatic	No economizer motion. Check damper blades, gears, and actuator. Actuator direction control switch (CCW, CW) wrong.
A711-ECON IMPROPER COOLING	Alert Generated	Automatic	No economizer motion. Check damper blades, gears, and actuator. Actuator direction control switch (CCW, CW) wrong.
A712-EXCESSIVE OUTDOOR AIR	Alert Generated	Automatic	No economizer motion. Check damper blades, gears, and actuator. Actuator direction control switch (CCW, CW) wrong.

Control Module Communication

RED LED

Proper operation of the MBB control board can be visually checked by looking at the red status LED. When operating correctly, the red status LED should blink at a rate of once every 2 seconds. If the red LED is not blinking, verify that correct power is being supplied. A blinking red LED at the rate of once per second means that software is not loaded on the board. Also, be sure that the board is supplied with the current software. If necessary, reload current software. A board LED that is lit continuously should be replaced.

GREEN LED

The MBB has one green LED. The Local Equipment Network (LEN) LED should always be blinking whenever power is on. If LEN LED is not blinking, check LEN connections for potential communication errors (MBB J15, J16, J17, and on the Display J2). Communication between modules is accomplished by a 3-wire sensor bus. These 3 wires run in parallel from module to module. The MBB J17 and Display J2 connectors provide both power and communication directly at the connector for accessories like the Navigator display. The MBB J15 connector provides a LEN interface to the indoor fan VFD.

YELLOW LED

The MBB has one yellow LED which is used to indicate Building Automated System (BAS) communication activity. The LED will blink when the MBB transmits a message on the bus.

Communication Failures

If the Navigator displays Communication Failure or the green or yellow LEDs do not flash on the boards then the problem could be the communication chip on one of the control boards (MBB). Use an ohm meter to measure the resistance on the communication pins of the boards to determine if the board is bad. If the reading is less then half the value indicated in Table 16, then the board needs to be replaced.

IMPORTANT: The resistive values should be read when the board is powered off, the unit is locked out, and board connectors are disconnected.

Cooling Troubleshooting

Use the SystemVu display or a CCN device to view the cooling status display and the cooling diagnostic display (see Appendices) for information on the cooling operation. Check the current alarms and alarm history for any cooling alarm codes and correct any causes. (See Table 15.) Verify any unique control configurations per installed site requirements or accessories.

If alarm conditions are corrected and cleared, operation of the compressors and fans may be verified by using the Service Test Mode (see Table 4). See Table 17 for general cooling service analysis.

Economizer Troubleshooting

Use the SystemVu display to view the economizer status. Check the current alerts and faults and the alarm history for economizer specific alerts or any relevant faults or alerts and correct those issues. Use test mode to troubleshoot by ramping the economizer up and down with and without the indoor fan and power exhaust fan on. Inspect the mechanical economizer for actuator, gear, or blade damage. Ensure the actuator is mounted with the correct spring return (close damper when no power applied to unit). Ensure there is a 500 ohm resister across the actuator as the 4-20mA output signal must be converted to 2-10V.

Table 16 — Communication Resistances

DEVICE	(LEN) RESISTANCE BETWEEN PINS / CONNECTOR			(BAS) RESISTANCE BETWEEN PINS / CONNECTOR			(RNET) RESISTANCE BETWEEN PINS / CONNECTOR		
	Pins 1 to 3	Pins 1 to 2	Pins 2 to 3	Pins 1 to 3	Pins 1 to 2	Pins 2 to 3	Pins GND to +	Pins GND to –	Pins + to –
MBB	19.92 KΩ	10.63 KΩ	9.51 KΩ	19.92 KΩ	10.63 KΩ	9.51 KΩ	2.25 KΩ	1 KΩ	3.3 KΩ

Table 17 — Cooling Service Analysis

PROBLEM	CAUSE	REMEDY
Compressor and Fan Will Not Start.	Power failure.	Call power company.
	Fuse blown or circuit breaker tripped.	Replace fuse or reset circuit breaker.
	Disconnect off.	Power disconnect.
	Compressor time guard to prevent short cycling.	Check using SystemVu Display.
	Thermostat or occupancy schedule set point not calling for Cooling.	Check using SystemVu Display.
	Outdoor temperature too low.	Check Compressor Lockout Temperature using SystemVu Display.
	Active alarm.	Check active alarms using SystemVu Scrolling Marquee.
Compressor Cycles (other than normally satisfying thermostat).	Insufficient line voltage.	Determine cause and correct.
	Active alarm.	Check active alarms using SystemVu Scrolling Marquee.
Compressor Operates Continuously.	Unit undersized for load.	Decrease load or increase size of unit.
	Thermostat or occupancy schedule set point too low.	Reset thermostat or schedule set point.
	Dirty air filters.	Replace filters.
	Low refrigerant charge.	Check pressure, locate leak, repair, evacuate, and recharge.
	Condenser coil dirty or restricted.	Clean coil or remove restriction.
Excessive Condenser Pressures.	Dirty condenser coil.	Clean coil.
	Refrigerant overcharge.	Recover excess refrigerant.
	Faulty TXV.	1. Check TXV bulb mounting and secure tightly to suction line and insulate. 2. Replace TXV (and filter drier) if stuck open or closed.
	Condenser air restricted or air short cycling.	Determine cause and correct.
	Restriction in liquid tube.	Remove restriction.
Condenser Fans Not Operating.	No Power to contactors.	Fuse blown or plug at motor loose.
Excessive Suction Pressure.	High heat load.	Check for sources and eliminate
	Faulty TXV.	1. Check TXV bulb mounting and secure tightly to suction line and insulate. 2. Replace TXV (and filter drier) if stuck open or closed.
	Refrigerant overcharged.	Recover excess refrigerant.
Suction Pressure Too Low.	Dirty air filters.	Replace air filters.
	Low refrigerant charge.	Check pressure, locate leak, repair, evacuate, and recharge.
	Faulty TXV.	1. Check TXV bulb mounting and secure tightly to suction line and insulate. 2. Replace TXV (and filter drier) if stuck open or closed.
	Temperature too low in conditioned area (low return-air temperature).	Reset thermostat or occupancy schedule.

LEGEND

TXV — Thermostatic Expansion Valve

Feedback from the actuator is a 2 to 10 volt feedback. If the feedback does not reach 2 volts when commanded to 0% a negative trim (***ECO FEEDBACK TRIM*** in the Service Calibration menu) can be put on the feedback to stop economizer alarms occurring at 0%. If this done the max damper position (***ECON MAX POS*** in the Economizer Settings menu) must be set less than 100% to prevent Economizer alarms at 100% since the trimmed value will not reach 100% at 10 Volts. Both signals can be measured with a meter on the signal and feedback wires J7 pins 4 and 3 respectively and referenced to ground J7 pin 8 while the values can be displayed on the local display.

The economizer alerts can be summarized as a failure to modulate the damper blades. This can be due to the actuator not being properly connected to the damper, or because the actuator's feedback signal is indicating that damper is not performing as commanded. The mechanical disconnect diagnostic will run when conditions are appropriate to determine proper air temperature changes. This uses the OAT, RAT, and SAT to tell if the damper is mixing the outdoor air with the return air. The other alerts inform where the damper is stuck relative to the commanded position.

See Table 18 for further information on economizer troubleshooting.

Table 18 — Economizer Service Analysis

PROBLEM	POSSIBLE CAUSE	REMEDY
Damper Does Not Move.	Indoor Fan is off.	Check for proper thermostat connection.
		Unit is not configured for continuous fan operation and the thermostat is not calling for heating or cooling.
		Unit is in Unoccupied mode and there is no call for heating or cooling.
		Tripped circuit breaker.
		No power to the unit.
		Unit is off via CCN command.
	Actuator is unplugged at motor or at economizer board.	Check wiring connections.
	Unit is not configured for economizer.	Configure unit for economizer per the instructions.
	Outdoor-air temperature is above economizer high temperature lockout.	Adjust the high temperature lockout setting if it is incorrect, otherwise, economizer is operating correctly.
	Outdoor-air temperature is below economizer low temperature lockout.	Adjust the low temperature lockout setting if it is incorrect, otherwise, economizer is operating correctly.
	Damper is jammed.	Identify the obstruction and safely remove.
Economizer Operation is Limited to Minimum Position.	Minimum position is set incorrectly.	Adjust minimum position setting.
	Outdoor-air temperature is above economizer high temperature lockout.	Adjust the high temperature lockout setting if it is incorrect, otherwise, economizer is operating correctly.
	Outdoor-air temperature is below economizer low temperature lockout.	Adjust the low temperature lockout setting if it is incorrect, otherwise, economizer is operating correctly.
	Enthalpy or differential dry bulb are preventing free cooling.	Check enthalpy and return air compared to outside air temperature.
	Outdoor-air thermistor is faulty.	Replace outdoor-air thermistor.
	Low suction pressure problem with a compressor.	Economizer is operating correctly, identify compressor problem.
Economizer Position is Less Than Minimum Position.	IAQ is controlling minimum damper position.	Adjust the IAQ settings if incorrect, otherwise, the economizer is operating correctly.
	Unit is in Unoccupied mode.	Adjust unit occupied schedule if incorrect, otherwise, economizer is operating correctly.
Economizer Does Not Return to Minimum Position.	Unit is operating under free cooling.	Economizer is operating correctly.
Damper Does Not Close on Power Loss.	Damper is jammed or spring return is backwards.	Identify the obstruction and safely remove.
Economizer is Not at Configured Minimum Position	Unit is operating under free cooling or a force is applied to the commanded position.	Economizer is operating correctly.

LEGEND

CCN — Carrier Comfort Network
IAQ — Indoor Air Quality

ECONOMIZER CALIBRATION

For best accuracy of the damper actuator or if nuisance 700 alarms occur, a damper calibration should be performed. The damper calibration will drive the damper open then closed to find max and minimum values and correct its range of motion limits. The correction factors can be viewed after the calibration is done under the ***SERVICE → CALIBRATION → ECON DAMPER CAL*** menu.

To initiate an economizer calibration put the unit in test mode then turn on the Calibrate Damper ***(SERVICE TEST → INDEPENDENTS → CALIBRATE DAMPER)***. To ensure best performance, it is recommended that you readjust the actuator to the damper assembly. First power off unit (spring return the damper), loosen the actuator clamp, while pushing the outside air damper closed, tighten the clamp, and then perform the calibration. The calibration can take up to 5 minutes to complete and will inform you when completed. If any alerts were active for activated during the calibration, wait a few minutes to see if they go away. If not, using test mode open then close the damper to clear them, or reset alarms.

Heating Troubleshooting

Use the unit SystemVu Display or a CCN device to view the heating status display and the heating diagnostic display (see Appendices) for information on the heating operation. Check the current alarms and alarm history for any heating alarm codes and correct any causes. (See Table 15.) Verify any unique control configurations per installed site requirements or accessories. If alarms conditions are corrected and cleared, operation of the heat stages and indoor fan may be verified by using the Service Test mode. (See Table 4.)

ELECTRIC HEAT

See Table 19 for electric heating service analysis.

Table 19 — Electric Heat Service Analysis

PROBLEM	CAUSE	REMEDY
Heat Will Not Turn On.	Active alarm.	Check active alarms using SystemVu™ Display.
	Unit is NOT configured for heat.	Check heating configurations using the SystemVu Display
	No power to unit.	Check power supply, fuses, wiring, and circuit breakers.
	Unit is in minimum heat off-time, or minimum cool-heat changeover time.	Check using SystemVu Display.
	Thermostat or occupancy schedule setpoint not calling for heating.	Check using SystemVu Display.
	Heat forced off in Service Test mode.	Check using SystemVu Display. Turn Service Test mode off.
	No 24 VAC at heater contactor.	Check transformer and circuit breaker.
		Check auto-reset limit switches on heater.
		Check manual-reset limit switch (LS) on indoor fan housing.
	Open temperature limit switch on heater.	Check minimum airflow. Check limit switch when it is cool, replace if open.
Inadequate Heating.	Dirty air filters.	Replace air filters.
	Thermostat or occupancy schedule setpoint only calling for W1.	Allow time for W2 to energize or adjust setpoints.
	Heat undersized for load.	Decrease load or increase size of heater.
	Restricted airflow	Remove restriction. Check SAT compared to the SAT heating limits.
	Too much outdoor air.	Check economizer position and configuration. Adjust minimum position.
	Limit switch cycles heaters.	Check rotation of blower and minimum airflow.
	Bad heater elements.	Power off unit and remove high voltage wires. Check resistance of element, replace if open.
Heat Will Not Turn Off.	Unit is in minimum heat on-time.	Check using SystemVu Display.
	Thermostat or occupancy schedule setpoint still calling for heating.	Check using SystemVu Display.
	Heat forced on in Service Test mode.	Check using SystemVu Display. Turn Service Test mode off.
	Heater contactor failed.	Power off unit. Check contactor and replace if closed.

Phase Protection

The phase loss protection option will monitor the three-phase electrical system to provide phase reversal and phase loss protection.

PHASE REVERSAL PROTECTION

If the control senses an incorrect phase relationship, the relay (K1) will be de-energized (opening its contact). If the phase relationship is correct, the relay will be energized. The control has a self-bypass function after a pre-set time. If the control determines that the three phases stay in a correct relationship for 10 consecutive minutes, the relay will stay energized regardless of the phase sequence of three inputs as long as 24-VAC control voltage is applied. This self-bypass function will be reset if all three phases are restored in a phase loss event.

PHASE LOSS PROTECTION

If the reverse rotation board senses any one of the three phase inputs has no AC voltage, the relay will be de-energized (opening its contact). This protection is always active as long as 24-VAC control voltage is applied, and is not affected by the self-bypass function of the phase sequence monitoring function. However, in the event of phase loss, the relay will be re-energized only if all three phases are restored and the three phases are in the correct sequence.

A red LED is provided to indicate the function of the board. See the table below.

LED STATUS	FUNCTION
On Continuously	Relay contact closed (normal operation).
Blinking	Relay contact open (phase loss or phase reversal has occurred) — No power will be supplied to the control system.
Off	24-VAC control power not present (off).

CONTROL VOLTAGE NOTE

Low control voltage levels (below 24 VAC) to the MBB can cause a wide variety of nuisance alarms alerts and faults. If multiple nuisance conditions are observed check the primary and secondary voltage for the control voltage transformer serving the MBB. 208/230 volt units should be checked for correct control voltage transformer wiring per the installation instructions.

Thermistor Troubleshooting

The SystemVu controller uses thermistors to sense temperatures used to control operation of the unit. Resistances at various temperatures are listed in Table 20 (on page 44). Thermistor pin connection points are shown in the Major System Components section. The general locations of the thermistors are shown the Major System Components section.

AIR TEMPERATURES

Air temperatures are measured with 10K thermistors. This includes supply-air temperature (SAT), outdoor-air temperature (OAT), space temperature sensors (T55, T56, T59), and return air temperature (RAT).

The supply air temperature (SAT) and outdoor air temperature (OAT) thermistors use a snap-mount to attach through the unit sheet metal panels. The snap-mount tabs must be flattened on the tip end of the sensor to release for removal from the panel. (See Fig. 14.) To reinstall, make sure the snap-mount tabs extend out.

THERMISTOR/TEMPERATURE SENSOR CHECK

A digital volt-ohmmeter is required to perform this check.

Connect the digital volt-ohmmeter across the appropriate thermistor terminals at the J8 connector on the Main Base Board (see Major System Components section). Using the voltage reading obtained, read the sensor temperature from Table 20 (on page 44).

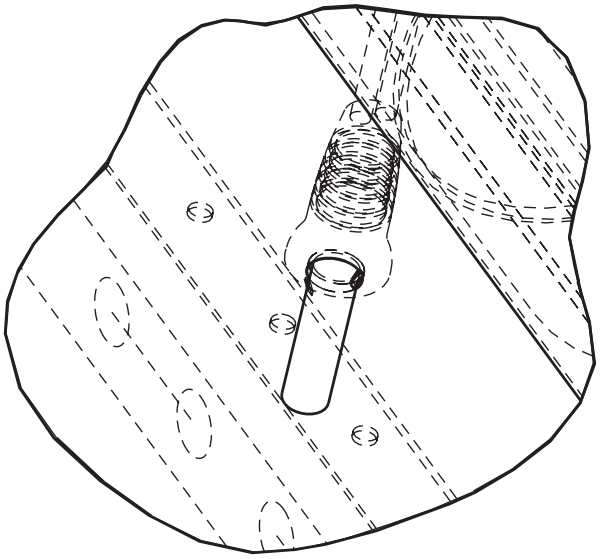

Fig. 14 — SAT and OAT Thermistor Mounting

To check thermistor accuracy, measure temperature at probe location with an accurate thermocouple-type temperature-measuring instrument. Insulate thermocouple to avoid ambient temperatures from influencing reading. Temperature measured by thermocouple and temperature determined from thermistor voltage reading should be close, within 5°F if care was taken in applying thermocouple and taking readings.

If a more accurate check is required, unit must be shut down and thermistor removed and checked at a known temperature (freezing point or boiling point of water) using either voltage drop measured across thermistor at the J8 connector, or by determining the resistance with unit shut down and thermistor disconnected from J8. Compare the values determined with the value read by the control in the Temperatures mode using the SystemVu display.

Sensor Trim

Corrective offsets can be applied to all the analog inputs. Trim can be used as a form of calibration. The trim works by adding or subtracting the specified amount on the specified analog input. These corrections should only be use when a proper calibrated tool is used to compare to the sensors reading. These corrections are only applied to the local sensor values, a building systems (BAS) communicating values will not account for these corrections. Use the ***SERVICE → CALIBRATION*** menu on the SystemVu display to adjust these values.

Transducer Troubleshooting

The electronic control uses suction and discharge pressure transducers to measure the pressure of the refrigerant circuits. The pressure/voltage characteristics of these transducers are in shown in Table 21 (on page 45) for suction transducers and Table 22 (on pages 47-49) for discharge transducers. The 5vdc power is applied to legs A and B of the transducer and legs B to C represent the signal voltage. To use the voltage drop table for troubleshooting, read the voltage across A and B, then subtract the voltage reading from B to C. The voltage drop can be looked up in Table 21 and Table 22 depending on the type of transducer. The accuracy of these transducers can be verified by connecting an accurate pressure gauge to the second refrigerant port in the suction and discharge lines.

Table 20 — Temperature (°F) vs Resistance/Voltage Drop Values for OAT, RAT, SAT, and SPT Thermistors (10K at 25°C Type II Resistors)

TEMP (F)	RESISTANCE (Ohms)	VOLTAGE DROP (V)	TEMP (F)	RESISTANCE (Ohms)	VOLTAGE DROP (V)	TEMP (F)	RESISTANCE (Ohms)	VOLTAGE DROP (V)
–25	196,453	4.758	**41**	25,396	3.587	**107**	4,984	1.663
–24	189,692	4.750	**42**	24,715	3.559	**108**	4,876	1.639
–23	183,300	4.741	**43**	24,042	3.531	**109**	4,769	1.615
–22	177,000	4.733	**44**	23,399	3.503	**110**	4,666	1.591
–21	171,079	4.724	**45**	22,770	3.474	**111**	4,564	1.567
–20	165,238	4.715	**46**	22,161	3.445	**112**	4,467	1.544
–19	159,717	4.705	**47**	21,573	3.416	**113**	4,370	1.521
–18	154,344	4.696	**48**	20,998	3.387	**114**	4,277	1.498
–17	149,194	4.686	**49**	20,447	3.357	**115**	4.185	1.475
–16	144,250	4.676	**50**	19,903	3.328	**116**	4,096	1.453
–15	139,443	4.665	**51**	19,386	3.298	**117**	4,008	1.431
–14	134,891	4.655	**52**	18,874	3.268	**118**	3,923	1.409
–13	130,402	4.644	**53**	18,384	3.238	**119**	3,840	1.387
–12	126,183	4.633	**54**	17,904	3.208	**120**	3,759	1.366
–11	122,018	4.621	**55**	17,441	3.178	**121**	3,681	1.345
–10	118,076	4.609	**56**	16,991	3.147	**122**	3,603	1.324
–9	114,236	4.597	**57**	16,552	3.117	**123**	3,529	1.304
–8	110,549	4.585	**58**	16,131	3.086	**124**	3,455	1.284
–7	107,006	4.572	**59**	15,714	3.056	**125**	3,383	1.264
–6	103,558	4.560	**60**	15,317	3.025	**126**	3,313	1.244
–5	100,287	4.546	**61**	14,925	2.994	**127**	3,244	1.225
–4	97,060	4.533	**62**	14,549	2.963	**128**	3,178	1.206
–3	94,020	4.519	**63**	14,180	2.932	**129**	3,112	1.187
–2	91,019	4.505	**64**	13,824	2.901	**130**	3,049	1.168
–1	88,171	4.490	**65**	13,478	2.870	**131**	2,986	1.150
0	85,396	4.476	**66**	13,139	2.839	**132**	2,926	1.132
1	82,729	4.461	**67**	12,814	2.808	**133**	2,866	1.114
2	80,162	4.445	**68**	12,493	2.777	**134**	2,809	1.096
3	77,662	4.429	**69**	12,187	2.746	**135**	2,752	1.079
4	75,286	4.413	**70**	11,884	2.715	**136**	2,697	1.062
5	72,940	4.397	**71**	11,593	2.684	**137**	2,643	1.045
6	70,727	4.380	**72**	11,308	2.653	**138**	2,590	1.028
7	68,542	4.363	**73**	11,031	2.622	**139**	2,539	1.012
8	66,465	4.346	**74**	10,764	2.592	**140**	2,488	0.996
9	64,439	4.328	**75**	10,501	2.561	**141**	2,439	0.980
10	62,491	4.310	**76**	10,249	2.530	**142**	2,391	0.965
11	60,612	4.292	**77**	10,000	2.500	**143**	2,343	0.949
12	58,781	4.273	**78**	9,762	2.470	**144**	2,297	0.934
13	57,039	4.254	**79**	9,526	2.439	**145**	2,253	0.919
14	55,319	4.235	**80**	9,300	2.409	**146**	2,209	0.905
15	53,693	4.215	**81**	9,078	2.379	**147**	2,166	0.890
16	52,086	4.195	**82**	8,862	2.349	**148**	2,124	0.876
17	50,557	4.174	**83**	8,653	2.319	**149**	2,083	0.862
18	49,065	4.153	**84**	8,448	2.290	**150**	2,043	0.848
19	47,627	4.132	**85**	8,251	2.260	**151**	2,003	0.835
20	46,240	4.111	**86**	8,056	2.231	**152**	1,966	0.821
21	44,888	4.089	**87**	7,869	2.202	**153**	1,928	0.808
22	43,598	4.067	**88**	7,685	2.173	**154**	1,891	0.795
23	42,324	4.044	**89**	7,507	2.144	**155**	1,855	0.782
24	41,118	4.021	**90**	7,333	2.115	**156**	1,820	0.770
25	39,926	3.998	**91**	7,165	2.087	**157**	1,786	0.758
26	38,790	3.975	**92**	6,999	2.059	**158**	1,752	0.745
27	37,681	3.951	**93**	6,838	2.030	**159**	1,719	0.733
28	36,610	3.927	**94**	6,683	2.003	**160**	1,687	0.722
29	35,577	3.903	**95**	6,530	1.975	**161**	1,656	0.710
30	34,569	3.878	**96**	6,383	1.948	**162**	1,625	0.699
31	33,606	3.853	**97**	6,238	1.921	**163**	1,594	0.687
32	32,654	3.828	**98**	6,098	1.894	**164**	1,565	0.676
33	31,752	3.802	**99**	5,961	1.867	**165**	1,536	0.666
34	30,860	3.776	**100**	5,827	1.841	**166**	1,508	0.655
35	30,009	3.750	**101**	5,698	1.815	**167**	1,480	0.645
36	29,177	3.723	**102**	5,571	1.789	**168**	1,453	0.634
37	28,373	3.697	**103**	5,449	1.763	**169**	1,426	0.624
38	27,597	3.670	**104**	5,327	1.738	**170**	1,400	0.614
39	26,838	3.654	**105**	5,210	1.713	**171**	1,375	0.604
40	26,113	3.615	**106**	5,095	1.688	**172**	1,350	0.595

Table 20 — Temperature (°F) vs Resistance/Voltage Drop Values for OAT, RAT, SAT, and SPT Thermistors (10K at 25°C Type II Resistors) (cont)

TEMP (F)	RESISTANCE (Ohms)	VOLTAGE DROP (V)	TEMP (F)	RESISTANCE (Ohms)	VOLTAGE DROP (V)	TEMP (F)	RESISTANCE (Ohms)	VOLTAGE DROP (V)
173	1,326	0.585	**191**	964	0.440	**209**	714	0.333
174	1,302	0.576	**192**	947	0.433	**210**	702	0.328
175	1,278	0.567	**193**	931	0.426	**211**	691	0.323
176	1,255	0.558	**194**	915	0.419	**212**	680	0.318
177	1,233	0.549	**195**	900	0.413	**213**	670	0.314
178	1,211	0.540	**196**	885	0.407	**214**	659	0.309
179	1,190	0.532	**197**	870	0.400	**215**	649	0.305
180	1,169	0.523	**198**	855	0.394	**216**	639	0.300
181	1,148	0.515	**199**	841	0.388	**217**	629	0.296
182	1,128	0.507	**200**	827	0.382	**218**	620	0.292
183	1,108	0.499	**201**	814	0.376	**219**	610	0.288
184	1,089	0.491	**202**	800	0.370	**220**	601	0.284
185	1,070	0.483	**203**	787	0.365	**221**	592	0.279
186	1,052	0.476	**204**	774	0.359	**222**	583	0.275
187	1,033	0.468	**205**	762	0.354	**223**	574	0.272
188	1,016	0.461	**206**	749	0.349	**224**	566	0.268
189	998	0.454	**207**	737	0.343	**225**	557	0.264
190	981	0.447	**208**	725	0.338			

Table 21 — Pressure (psig) vs. Voltage Drop Values for Suction Pressure Transducers

PRESSURE (psig)	VOLTAGE DROP (V)	PRESSURE (psig)	VOLTAGE DROP (V)	PRESSURE (psig)	VOLTAGE DROP (V)	PRESSURE (psig)	VOLTAGE DROP (V)
0	0.466	**43**	0.889	**86**	1.312	**129**	1.736
1	0.476	**44**	0.899	**87**	1.322	**130**	1.745
2	0.486	**45**	0.909	**88**	1.332	**131**	1.755
3	0.495	**46**	0.919	**89**	1.342	**132**	1.765
4	0.505	**47**	0.928	**90**	1.352	**133**	1.775
5	0.515	**48**	0.938	**91**	1.362	**134**	1.785
6	0.525	**49**	0.948	**92**	1.371	**135**	1.795
7	0.535	**50**	0.958	**93**	1.381	**136**	1.805
8	0.545	**51**	0.968	**94**	1.391	**137**	1.814
9	0.554	**52**	0.978	**95**	1.401	**138**	1.824
10	0.564	**53**	0.988	**96**	1.411	**139**	1.834
11	0.574	**54**	0.997	**97**	1.421	**140**	1.844
12	0.584	**55**	1.007	**98**	1.430	**141**	1.854
13	0.594	**56**	1.017	**99**	1.440	**142**	1.864
14	0.604	**57**	1.027	**100**	1.450	**143**	1.873
15	0.614	**58**	1.037	**101**	1.460	**144**	1.883
16	0.623	**59**	1.047	**102**	1.470	**145**	1.893
17	0.633	**60**	1.056	**103**	1.480	**146**	1.903
18	0.643	**61**	1.066	**104**	1.490	**147**	1.913
19	0.653	**62**	1.076	**105**	1.499	**148**	1.923
20	0.663	**63**	1.086	**106**	1.509	**149**	1.932
21	0.673	**64**	1.096	**107**	1.519	**150**	1.942
22	0.682	**65**	1.106	**108**	1.529	**151**	1.952
23	0.692	**66**	1.116	**109**	1.539	**152**	1.962
24	0.702	**67**	1.125	**110**	1.549	**153**	1.972
25	0.712	**68**	1.135	**111**	1.558	**154**	1.982
26	0.722	**69**	1.145	**112**	1.568	**155**	1.992
27	0.732	**70**	1.155	**113**	1.578	**156**	2.001
28	0.741	**71**	1.165	**114**	1.588	**157**	2.011
29	0.751	**72**	1.175	**115**	1.598	**158**	2.021
30	0.761	**73**	1.184	**116**	1.608	**159**	2.031
31	0.771	**74**	1.194	**117**	1.618	**160**	2.041
32	0.781	**75**	1.204	**118**	1.627	**161**	2.051
33	0.791	**76**	1.214	**119**	1.637	**162**	2.060
34	0.801	**77**	1.224	**120**	1.647	**163**	2.070
35	0.810	**78**	1.234	**121**	1.657	**164**	2.080
36	0.820	**79**	1.243	**122**	1.667	**165**	2.090
37	0.830	**80**	1.253	**123**	1.677	**166**	2.100
38	0.840	**81**	1.263	**124**	1.686	**167**	2.110
39	0.850	**82**	1.273	**125**	1.696	**168**	2.120
40	0.860	**83**	1.283	**126**	1.706	**169**	2.129
41	0.869	**84**	1.293	**127**	1.716	**170**	2.139
42	0.879	**85**	1.303	**128**	1.726	**171**	2.149

Table 21 — Pressure (psig) vs. Voltage Drop Values for Suction Pressure Transducers (cont)

PRESSURE (psig)	VOLTAGE DROP (V)	PRESSURE (psig)	VOLTAGE DROP (V)	PRESSURE (psig)	VOLTAGE DROP (V)	PRESSURE (psig)	VOLTAGE DROP (V)
172	2.159	**235**	2.779	**297**	3.389	**359**	4.000
173	2.169	**236**	2.789	**298**	3.399	**360**	4.009
174	2.179	**237**	2.799	**299**	3.409	**361**	4.019
175	2.188	**238**	2.809	**300**	3.419	**362**	4.029
176	2.198	**239**	2.818	**301**	3.429	**363**	4.039
177	2.208	**240**	2.828	**302**	3.438	**364**	4.049
178	2.218	**241**	2.838	**303**	3.448	**365**	4.059
179	2.228	**242**	2.848	**304**	3.458	**366**	4.068
180	2.238	**243**	2.858	**305**	3.468	**367**	4.078
181	2.247	**244**	2.868	**306**	3.478	**368**	4.088
182	2.257	**245**	2.877	**307**	3.488	**369**	4.098
183	2.267	**246**	2.887	**308**	3.498	**370**	4.108
184	2.277	**247**	2.897	**309**	3.507	**371**	4.118
185	2.287	**248**	2.907	**310**	3.517	**372**	4.128
186	2.297	**249**	2.917	**311**	3.527	**373**	4.137
187	2.307	**250**	2.927	**312**	3.537	**374**	4.147
188	2.316	**251**	2.936	**313**	3.547	**375**	4.157
189	2.326	**252**	2.946	**314**	3.557	**376**	4.167
190	2.336	**253**	2.956	**315**	3.566	**377**	4.177
191	2.346	**254**	2.966	**316**	3.576	**378**	4.187
192	2.356	**255**	2.976	**317**	3.586	**379**	4.196
193	2.366	**256**	2.986	**318**	3.596	**380**	4.206
194	2.375	**257**	2.996	**319**	3.606	**381**	4.216
195	2.385	**258**	3.005	**320**	3.616	**382**	4.226
196	2.395	**259**	3.015	**321**	3.626	**383**	4.236
197	2.405	**260**	3.025	**322**	3.635	**384**	4.246
198	2.415	**261**	3.035	**323**	3.645	**385**	4.255
199	2.425	**262**	3.045	**324**	3.655	**386**	4.265
200	2.434	**263**	3.055	**325**	3.665	**387**	4.275
201	2.444	**264**	3.064	**326**	3.675	**388**	4.285
202	2.454	**265**	3.074	**327**	3.685	**389**	4.295
203	2.464	**266**	3.084	**328**	3.694	**390**	4.305
204	2.474	**267**	3.094	**329**	3.704	**391**	4.315
205	2.484	**268**	3.104	**330**	3.714	**392**	4.324
206	2.494	**269**	3.114	**331**	3.724	**393**	4.334
207	2.503	**270**	3.124	**332**	3.734	**394**	4.344
208	2.513	**271**	3.133	**333**	3.744	**395**	4.354
209	2.523	**272**	3.143	**334**	3.753	**396**	4.364
210	2.533	**273**	3.153	**335**	3.763	**397**	4.374
211	2.543	**274**	3.163	**336**	3.773	**398**	4.383
212	2.553	**275**	3.173	**337**	3.783	**399**	4.393
213	2.562	**276**	3.183	**338**	3.793	**400**	4.403
214	2.572	**277**	3.192	**339**	3.803	**401**	4.413
215	2.582	**278**	3.202	**340**	3.813	**402**	4.423
216	2.592	**279**	3.212	**341**	3.822	**403**	4.433
217	2.602	**280**	3.222	**342**	3.832	**404**	4.442
218	2.612	**281**	3.232	**343**	3.842	**405**	4.452
219	2.622	**282**	3.242	**344**	3.852	**406**	4.462
220	2.631	**283**	3.251	**345**	3.862	**407**	4.472
221	2.641	**284**	3.261	**346**	3.872	**408**	4.482
222	2.651	**285**	3.271	**347**	3.881	**409**	4.492
223	2.661	**286**	3.281	**348**	3.891	**410**	4.502
224	2.671	**287**	3.291	**349**	3.901	**411**	4.511
225	2.681	**288**	3.301	**350**	3.911	**412**	4.521
226	2.690	**289**	3.311	**351**	3.921	**413**	4.531
227	2.700	**290**	3.320	**352**	3.931	**414**	4.541
228	2.710	**291**	3.330	**353**	3.940	**415**	4.551
229	2.720	**292**	3.340	**354**	3.950	**416**	4.561
230	2.730	**293**	3.350	**355**	3.960	**417**	4.570
231	2.740	**294**	3.360	**356**	3.970	**418**	4.580
232	2.749	**295**	3.370	**357**	3.980	**419**	4.590
233	2.759	**296**	3.379	**358**	3.990	**420**	4.600
234	2.769						

Table 22 — Discharge Pressure Transducer (psig) vs. Voltage

PRESSURE (psig)	VOLTAGE DROP (V)	PRESSURE (psig)	VOLTAGE DROP (V)	PRESSURE (psig)	VOLTAGE DROP (V)	PRESSURE (psig)	VOLTAGE DROP (V)
14.5	0.500	**81**	0.908	**148**	1.318	**215**	1.729
16	0.509	**82**	0.914	**149**	1.325	**216**	1.735
17	0.515	**83**	0.920	**150**	1.331	**217**	1.741
18	0.521	**84**	0.926	**151**	1.337	**218**	1.747
19	0.528	**85**	0.932	**152**	1.343	**219**	1.754
20	0.534	**86**	0.938	**153**	1.349	**220**	1.760
21	0.540	**87**	0.944	**154**	1.355	**221**	1.766
22	0.546	**88**	0.951	**155**	1.361	**222**	1.772
23	0.552	**89**	0.957	**156**	1.367	**223**	1.778
24	0.558	**90**	0.963	**157**	1.374	**224**	1.784
25	0.564	**91**	0.969	**158**	1.380	**225**	1.790
26	0.570	**92**	0.975	**159**	1.386	**226**	1.797
27	0.577	**93**	0.981	**160**	1.392	**227**	1.803
28	0.583	**94**	0.987	**161**	1.398	**228**	1.809
29	0.589	**95**	0.993	**162**	1.404	**229**	1.815
30	0.595	**96**	1.000	**163**	1.410	**230**	1.821
31	0.601	**97**	1.006	**164**	1.416	**231**	1.827
32	0.607	**98**	1.012	**165**	1.423	**232**	1.833
33	0.613	**99**	1.018	**166**	1.429	**233**	1.839
34	0.620	**100**	1.024	**167**	1.435	**234**	1.846
35	0.626	**101**	1.030	**168**	1.441	**235**	1.852
35	0.626	**102**	1.036	**169**	1.447	**236**	1.858
36	0.632	**103**	1.043	**170**	1.453	**237**	1.864
37	0.638	**104**	1.049	**171**	1.459	**238**	1.870
38	0.644	**105**	1.055	**172**	1.466	**239**	1.876
39	0.650	**106**	1.061	**173**	1.472	**240**	1.882
40	0.656	**107**	1.067	**174**	1.478	**241**	1.888
41	0.662	**108**	1.073	**175**	1.484	**242**	1.895
42	0.669	**109**	1.079	**176**	1.490	**243**	1.901
43	0.675	**110**	1.085	**177**	1.496	**244**	1.907
44	0.681	**111**	1.092	**178**	1.502	**245**	1.913
45	0.687	**112**	1.098	**179**	1.508	**246**	1.919
46	0.693	**113**	1.104	**180**	1.515	**247**	1.925
47	0.699	**114**	1.110	**181**	1.521	**248**	1.931
48	0.705	**115**	1.116	**182**	1.527	**249**	1.938
49	0.711	**116**	1.122	**183**	1.533	**250**	1.944
50	0.718	**117**	1.128	**184**	1.539	**251**	1.950
51	0.724	**118**	1.134	**185**	1.545	**252**	1.956
52	0.730	**119**	1.141	**186**	1.551	**253**	1.962
53	0.736	**120**	1.147	**187**	1.557	**254**	1.968
54	0.742	**121**	1.153	**188**	1.564	**255**	1.974
55	0.748	**122**	1.159	**189**	1.570	**256**	1.980
56	0.754	**123**	1.165	**190**	1.576	**257**	1.987
57	0.761	**124**	1.171	**191**	1.582	**258**	1.993
58	0.767	**125**	1.177	**192**	1.588	**259**	1.999
59	0.773	**126**	1.184	**193**	1.594	**260**	2.005
60	0.779	**127**	1.190	**194**	1.600	**261**	2.011
61	0.785	**128**	1.196	**195**	1.606	**262**	2.017
62	0.791	**129**	1.202	**196**	1.613	**263**	2.023
63	0.797	**130**	1.208	**197**	1.619	**264**	2.029
64	0.803	**131**	1.214	**198**	1.625	**265**	2.036
65	0.810	**132**	1.220	**199**	1.631	**266**	2.042
66	0.816	**133**	1.226	**200**	1.637	**267**	2.048
67	0.822	**134**	1.233	**201**	1.643	**268**	2.054
68	0.828	**135**	1.239	**202**	1.649	**269**	2.060
69	0.834	**136**	1.245	**203**	1.656	**270**	2.066
70	0.840	**137**	1.251	**204**	1.662	**271**	2.072
71	0.846	**138**	1.257	**205**	1.668	**272**	2.079
72	0.852	**139**	1.263	**206**	1.674	**273**	2.085
73	0.859	**140**	1.269	**207**	1.680	**274**	2.091
74	0.865	**141**	1.275	**208**	1.686	**275**	2.097
75	0.871	**142**	1.282	**209**	1.692	**276**	2.103
76	0.877	**143**	1.288	**210**	1.698	**277**	2.109
77	0.883	**144**	1.294	**211**	1.705	**278**	2.115
78	0.889	**145**	1.300	**212**	1.711	**279**	2.121
79	0.895	**146**	1.306	**213**	1.717	**280**	2.128
80	0.902	**147**	1.312	**214**	1.723	**281**	2.134

Table 22 — Discharge Pressure Transducer (psig) vs. Voltage (cont)

PRESSURE (psig)	VOLTAGE DROP (V)	PRESSURE (psig)	VOLTAGE DROP (V)	PRESSURE (psig)	VOLTAGE DROP (V)	PRESSURE (psig)	VOLTAGE DROP (V)
282	2.140	**350**	2.557	**418**	2.974	**486**	3.390
283	2.146	**351**	2.563	**419**	2.980	**487**	3.397
284	2.152	**352**	2.569	**420**	2.986	**488**	3.403
285	2.158	**353**	2.575	**421**	2.992	**489**	3.409
286	2.164	**354**	2.581	**422**	2.998	**490**	3.415
287	2.170	**355**	2.587	**423**	3.004	**491**	3.421
288	2.177	**356**	2.593	**424**	3.010	**492**	3.427
289	2.183	**357**	2.600	**425**	3.016	**493**	3.433
290	2.189	**358**	2.606	**426**	3.023	**494**	3.439
291	2.195	**359**	2.612	**427**	3.029	**495**	3.446
292	2.201	**360**	2.618	**428**	3.035	**496**	3.452
293	2.207	**361**	2.624	**429**	3.041	**497**	3.458
294	2.213	**362**	2.630	**430**	3.047	**498**	3.464
295	2.220	**363**	2.636	**431**	3.053	**499**	3.470
296	2.226	**364**	2.643	**432**	3.059	**500**	3.476
297	2.232	**365**	2.649	**433**	3.066	**501**	3.482
298	2.238	**366**	2.655	**434**	3.072	**502**	3.488
299	2.244	**367**	2.661	**435**	3.078	**503**	3.495
300	2.250	**368**	2.667	**436**	3.084	**504**	3.501
301	2.256	**369**	2.673	**437**	3.090	**505**	3.507
302	2.262	**370**	2.679	**438**	3.096	**506**	3.513
303	2.269	**371**	2.685	**439**	3.102	**507**	3.519
304	2.275	**372**	2.692	**440**	3.108	**508**	3.525
305	2.281	**373**	2.698	**441**	3.115	**509**	3.531
306	2.287	**374**	2.704	**442**	3.121	**510**	3.538
307	2.293	**375**	2.710	**443**	3.127	**511**	3.544
308	2.299	**376**	2.716	**444**	3.133	**512**	3.550
309	2.305	**377**	2.722	**445**	3.139	**513**	3.556
310	2.311	**378**	2.728	**446**	3.145	**514**	3.562
311	2.318	**379**	2.734	**447**	3.151	**515**	3.568
312	2.324	**380**	2.741	**448**	3.157	**516**	3.574
313	2.330	**381**	2.747	**449**	3.164	**517**	3.580
314	2.336	**382**	2.753	**450**	3.170	**518**	3.587
315	2.342	**383**	2.759	**451**	3.176	**519**	3.593
316	2.348	**384**	2.765	**452**	3.182	**520**	3.599
317	2.354	**385**	2.771	**453**	3.188	**521**	3.605
318	2.361	**386**	2.777	**454**	3.194	**522**	3.611
319	2.367	**387**	2.784	**455**	3.200	**523**	3.617
320	2.373	**388**	2.790	**456**	3.206	**524**	3.623
321	2.379	**389**	2.796	**457**	3.213	**525**	3.629
322	2.385	**390**	2.802	**458**	3.219	**526**	3.636
323	2.391	**391**	2.808	**459**	3.225	**527**	3.642
324	2.397	**392**	2.814	**460**	3.231	**528**	3.648
325	2.403	**393**	2.820	**461**	3.237	**529**	3.654
326	2.410	**394**	2.826	**462**	3.243	**530**	3.660
327	2.416	**395**	2.833	**463**	3.249	**531**	3.666
328	2.422	**396**	2.839	**464**	3.256	**532**	3.672
329	2.428	**397**	2.845	**465**	3.262	**533**	3.679
330	2.434	**398**	2.851	**466**	3.268	**534**	3.685
331	2.440	**399**	2.857	**467**	3.274	**535**	3.691
332	2.446	**400**	2.863	**468**	3.280	**536**	3.697
333	2.452	**401**	2.869	**469**	3.286	**537**	3.703
334	2.459	**402**	2.875	**470**	3.292	**538**	3.709
335	2.465	**403**	2.882	**471**	3.298	**539**	3.715
336	2.471	**404**	2.888	**472**	3.305	**540**	3.721
337	2.477	**405**	2.894	**473**	3.311	**541**	3.728
338	2.483	**406**	2.900	**474**	3.317	**542**	3.734
339	2.489	**407**	2.906	**475**	3.323	**543**	3.740
340	2.495	**408**	2.912	**476**	3.329	**544**	3.746
341	2.502	**409**	2.918	**477**	3.335	**545**	3.752
342	2.508	**410**	2.925	**478**	3.341	**546**	3.758
343	2.514	**411**	2.931	**479**	3.347	**547**	3.764
344	2.520	**412**	2.937	**480**	3.354	**548**	3.770
345	2.526	**413**	2.943	**481**	3.360	**549**	3.777
346	2.532	**414**	2.949	**482**	3.366	**550**	3.783
347	2.538	**415**	2.955	**483**	3.372	**551**	3.789
348	2.544	**416**	2.961	**484**	3.378	**552**	3.795
349	2.551	**417**	2.967	**485**	3.384	**553**	3.801

Table 22 — Discharge Pressure Transducer (psig) vs. Voltage (cont)

PRESSURE (psig)	VOLTAGE DROP (V)	PRESSURE (psig)	VOLTAGE DROP (V)	PRESSURE (psig)	VOLTAGE DROP (V)	PRESSURE (psig)	VOLTAGE DROP (V)
554	3.807	**583**	3.985	**612**	4.163	**641**	4.341
555	3.813	**584**	3.991	**613**	4.169	**642**	4.347
556	3.820	**585**	3.997	**614**	4.175	**643**	4.353
557	3.826	**586**	4.003	**615**	4.181	**644**	4.359
558	3.832	**587**	4.010	**616**	4.187	**645**	4.365
559	3.838	**588**	4.016	**617**	4.193	**646**	4.371
560	3.844	**589**	4.022	**618**	4.200	**647**	4.377
561	3.850	**590**	4.028	**619**	4.206	**648**	4.384
562	3.856	**591**	4.034	**620**	4.212	**649**	4.390
563	3.862	**592**	4.040	**621**	4.218	**650**	4.396
564	3.869	**593**	4.046	**622**	4.224	**651**	4.402
565	3.875	**594**	4.052	**623**	4.230	**652**	4.408
566	3.881	**595**	4.059	**624**	4.236	**653**	4.414
567	3.887	**596**	4.065	**625**	4.243	**654**	4.420
568	3.893	**597**	4.071	**626**	4.249	**655**	4.426
569	3.899	**598**	4.077	**627**	4.255	**656**	4.433
570	3.905	**599**	4.083	**628**	4.261	**657**	4.439
571	3.911	**600**	4.089	**629**	4.267	**658**	4.445
572	3.918	**601**	4.095	**630**	4.273	**659**	4.451
573	3.924	**602**	4.102	**631**	4.279	**660**	4.457
574	3.930	**603**	4.108	**632**	4.285	**661**	4.463
575	3.936	**604**	4.114	**633**	4.292	**662**	4.469
576	3.942	**605**	4.120	**634**	4.298	**663**	4.475
577	3.948	**606**	4.126	**635**	4.304	**664**	4.482
578	3.954	**607**	4.132	**636**	4.310	**665**	4.488
579	3.961	**608**	4.138	**637**	4.316	**666**	4.494
580	3.967	**609**	4.144	**638**	4.322	**667**	4.500
581	3.973	**610**	4.151	**639**	4.328		
582	3.979	**611**	4.157	**640**	4.334		

Restore Factory Defaults

Incorrect software configurations can cause nuisance alarms and erratic unit behavior. In the event that an improper software configuration is suspected, the software settings can be restored to factory defaults as follows:

1. Record all network settings and TAB settings as needed.
2. Verify model and serial number are exactly the same as on the control box label. The model number must have all letters and NO dashes in it except for fifth digit of electric unit with no electric heat.. The model and serial can be viewed as follows: ***MAIN MENU →SERVICE → UNIT INFORMATION***
   a. If the model and serial are NOT correct, correct them as follows: ***MAIN MENU → SERVICE → ADVANCED SERVICE → EDIT MODEL NUMBER/EDIT SERIAL NUMBER***
3. Restore Factory Defaults as follows: ***MAIN MENU → SERVICE → ADVANCED SERVICE → RESTORE DEFAULTS →KEEP CONFIGS = N***

NOTE: The process takes several minutes. When completed if you did not keep configs, you will need to re-enter BAS, TAB, etc. settings.

MAJOR SYSTEM COMPONENTS

General

The 50FEQ and 50GEQ single package rooftop heat pump units are available with the factory-installed optional SystemVu electronic control system that monitors all operations of the rooftop. The control system is composed of several main control components and available factory-installed options or field-installed accessories as listed in sections below. See Fig. 15-28 for examples of typical control and power schematics.

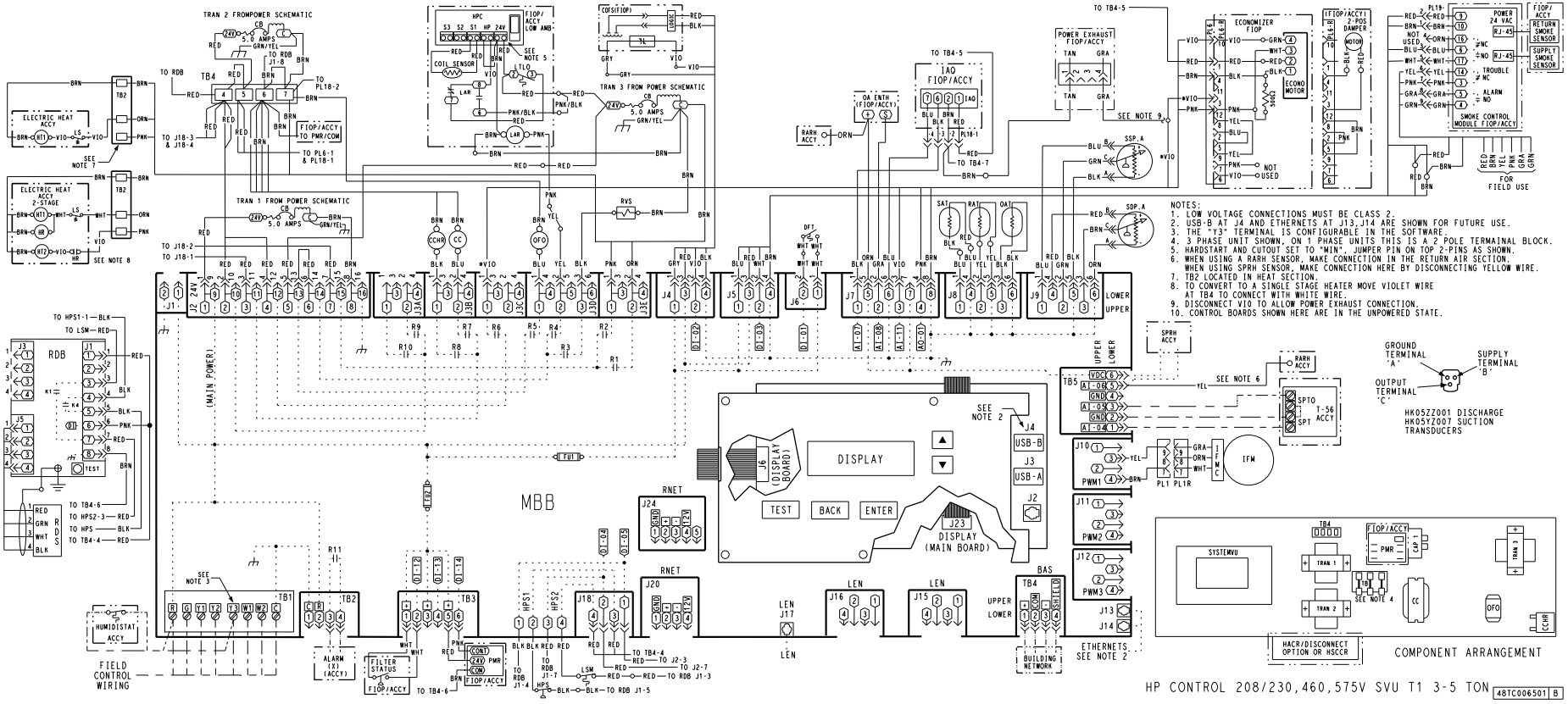

Fig. 15 — 50FEQ 04-06 SystemVu Control Schematic

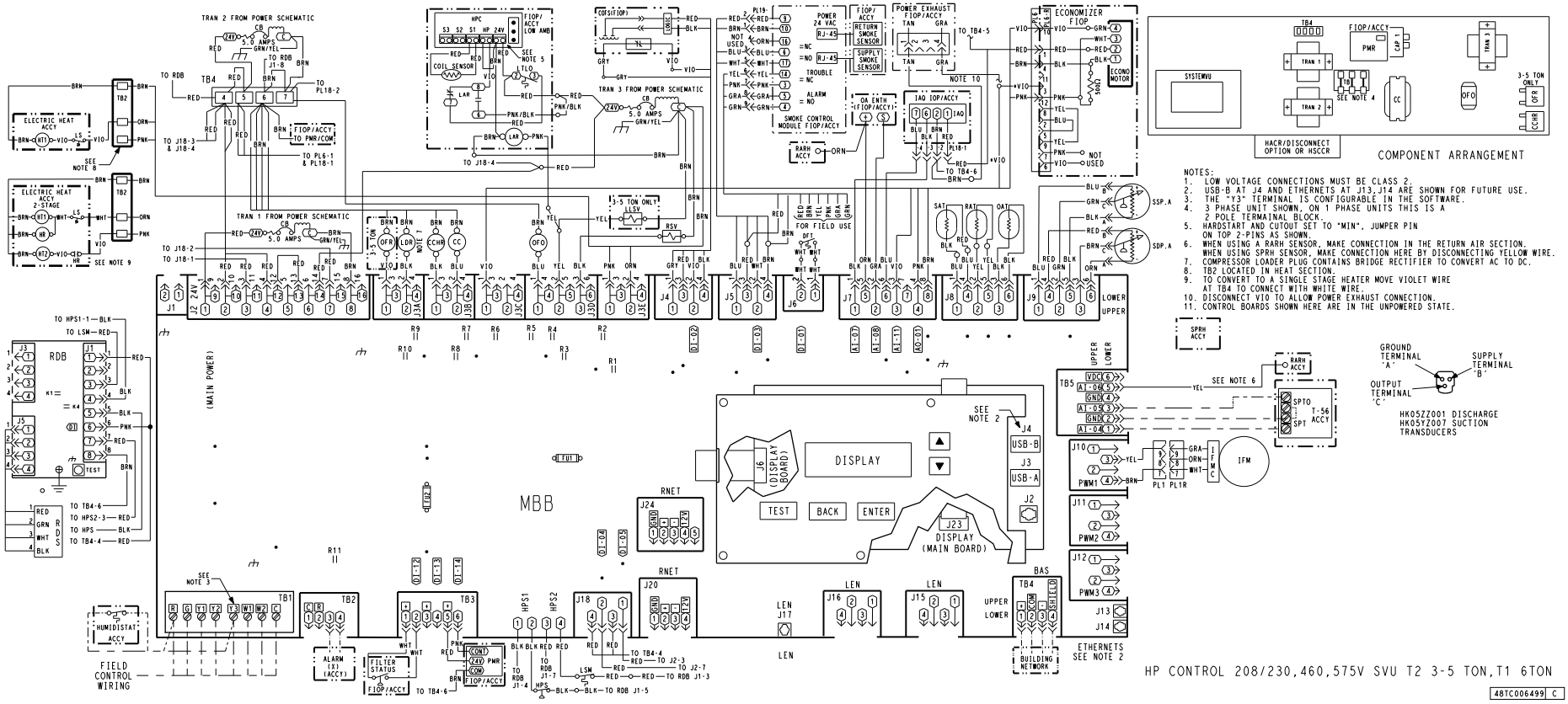

Fig. 16 — 50FEQ 07 and 50GEQ 04-06 SystemVu Control Schematic

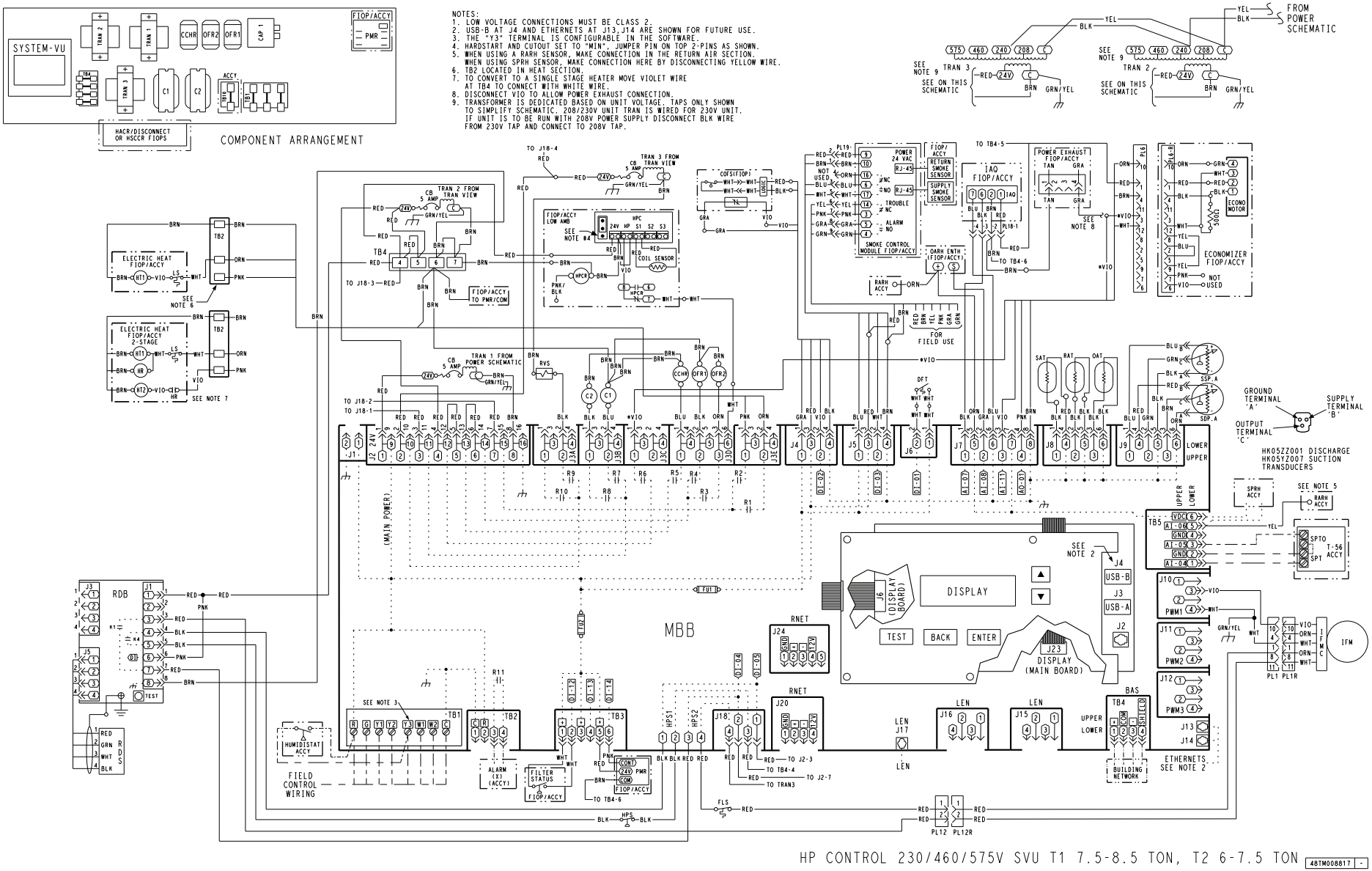

Fig. 17 — 50FEQ 08-09 and 50GEQ 07-08 SystemVu Control Schematic

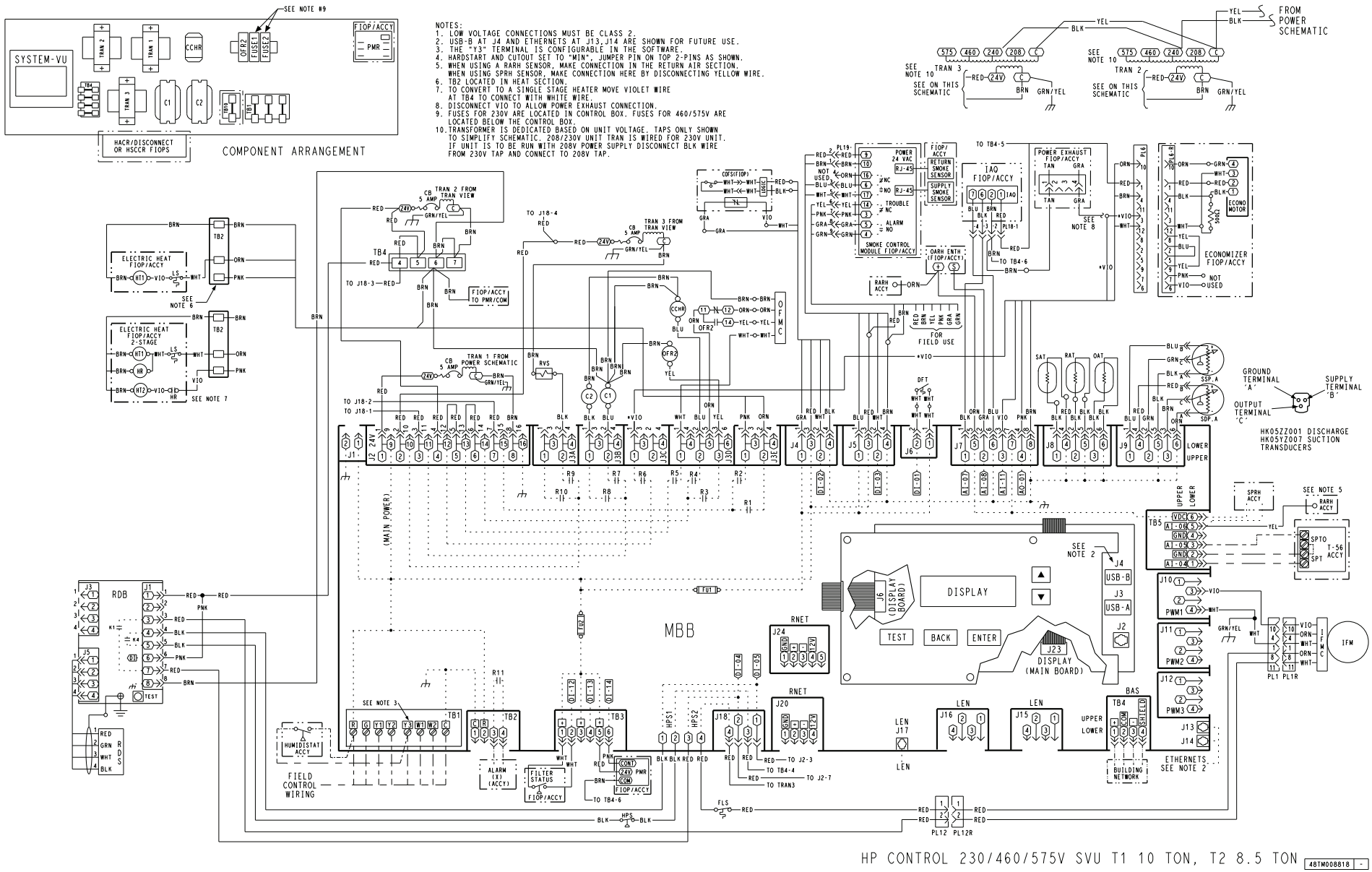

Fig. 18 — 50FEQ 12 and 50GEQ 09 SystemVu Control Schematic

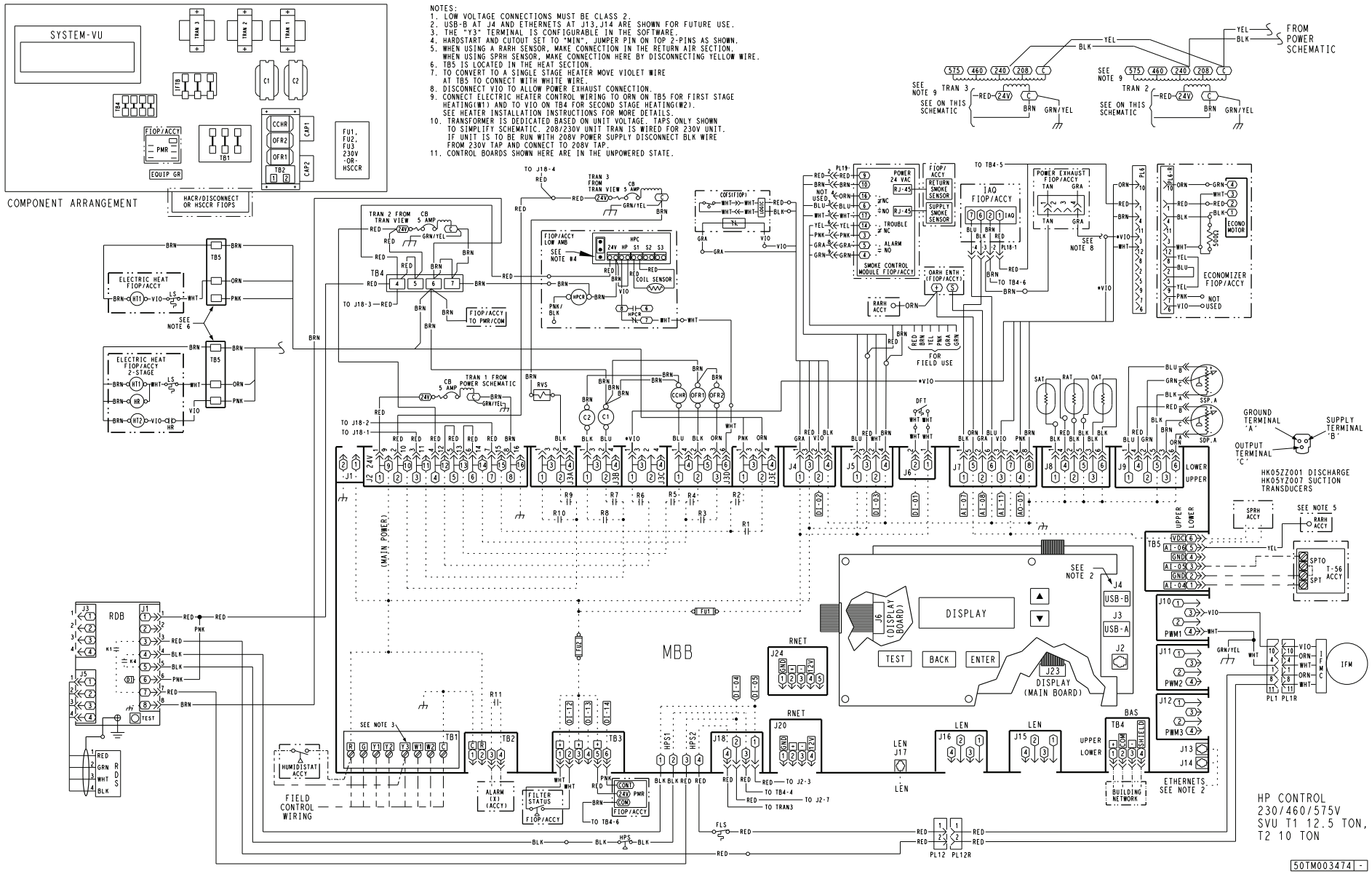

Fig. 19 — 50FEQ 14 and 50GEQ 12 SystemVu Control Schematic

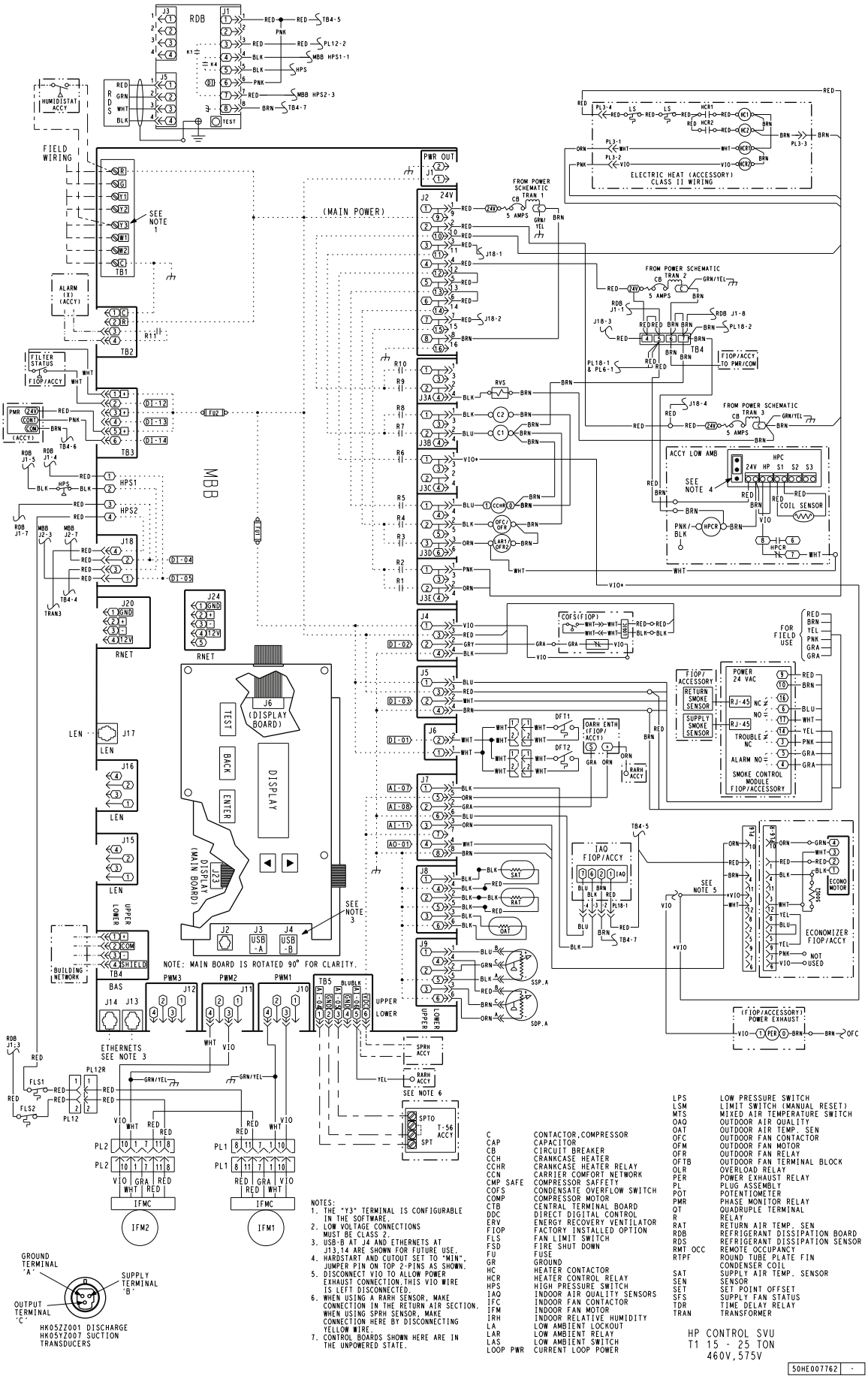

Fig. 20 — 50FEQ 17-28 SystemVu Control Schematic (460, 575-3-60)

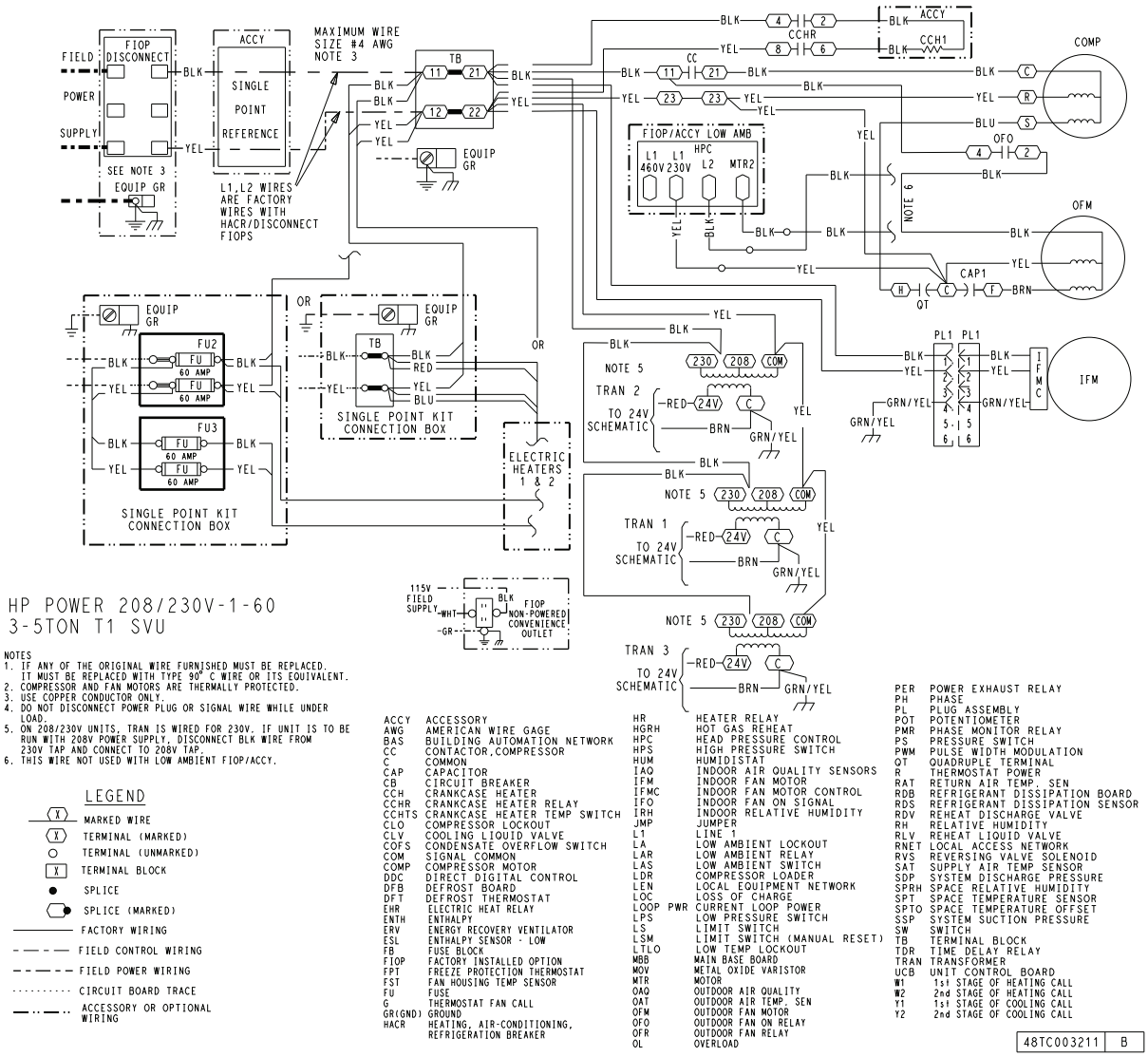

NOTES
1. IF ANY OF THE ORIGINAL WIRE FURNISHED MUST BE REPLACED. IT MUST BE REPLACED WITH TYPE 90° C WIRE OR ITS EQUIVALENT.
2. COMPRESSOR AND FAN MOTORS ARE THERMALLY PROTECTED.
3. USE COPPER CONDUCTOR ONLY.
4. DO NOT DISCONNECT POWER PLUG OR SIGNAL WIRE WHILE UNDER LOAD.
5. ON 208/230V UNITS, TRAN IS WIRED FOR 230V. IF UNIT IS TO BE RUN WITH 208V POWER SUPPLY, DISCONNECT BLK WIRE FROM 230V TAP AND CONNECT TO 208V TAP.
6. THIS WIRE NOT USED WITH LOW AMBIENT FIOP/ACCY.

ACCY	ACCESSORY
AWG	AMERICAN WIRE GAGE
BAS	BUILDING AUTOMATION NETWORK
CC	CONTACTOR,COMPRESSOR
C	COMMON
CAP	CAPACITOR
CB	CIRCUIT BREAKER
CCH	CRANKCASE HEATER
CCHR	CRANKCASE HEATER RELAY
CCHTS	CRANKCASE HEATER TEMP SWITCH
CLO	COMPRESSOR LOCKOUT
CLV	COOLING LIQUID VALVE
COFS	CONDENSATE OVERFLOW SWITCH
COM	SIGNAL COMMON
COMP	COMPRESSOR MOTOR
DDC	DIRECT DIGITAL CONTROL
DFB	DEFROST BOARD
DFT	DEFROST THERMOSTAT
EHR	ELECTRIC HEAT RELAY
ENTH	ENTHALPY
ERV	ENERGY RECOVERY VENTILATOR
ESL	ENTHALPY SENSOR - LOW
FB	FUSE BLOCK
FIOP	FACTORY INSTALLED OPTION
FPT	FREEZE PROTECTION THERMOSTAT
FST	FAN HOUSING TEMP SENSOR
FU	FUSE
G	THERMOSTAT FAN CALL
GR(GND)	GROUND
HACR	HEATING, AIR-CONDITIONING, REFRIGERATION BREAKER
HR	HEATER RELAY
HGRH	HOT GAS REHEAT
HPC	HEAD PRESSURE CONTROL
HPS	HIGH PRESSURE SWITCH
HUM	HUMIDISTAT
IAQ	INDOOR AIR QUALITY SENSORS
IFM	INDOOR FAN MOTOR
IFMC	INDOOR FAN MOTOR CONTROL
IFO	INDOOR FAN ON SIGNAL
IRH	INDOOR RELATIVE HUMIDITY
JMP	JUMPER
L1	LINE 1
LA	LOW AMBIENT LOCKOUT
LAR	LOW AMBIENT RELAY
LAS	LOW AMBIENT SWITCH
LDR	COMPRESSOR LOADER
LEN	LOCAL EQUIPMENT NETWORK
LOC	LOSS OF CHARGE
LOOP PWR	CURRENT LOOP POWER
LPS	LOW PRESSURE SWITCH
LS	LIMIT SWITCH
LSM	LIMIT SWITCH (MANUAL RESET)
LTLO	LOW TEMP LOCKOUT
MBB	MAIN BASE BOARD
MOV	METAL OXIDE VARISTOR
MTR	MOTOR
OAQ	OUTDOOR AIR QUALITY
OAT	OUTDOOR AIR TEMP. SEN
OFM	OUTDOOR FAN MOTOR
OFO	OUTDOOR FAN ON RELAY
OFR	OUTDOOR FAN RELAY
OL	OVERLOAD
PER	POWER EXHAUST RELAY
PH	PHASE
PL	PLUG ASSEMBLY
POT	POTENTIOMETER
PMR	PHASE MONITOR RELAY
PS	PRESSURE SWITCH
PWM	PULSE WIDTH MODULATION
QT	QUADRUPLE TERMINAL
R	THERMOSTAT POWER
RAT	RETURN AIR TEMP. SEN
RDB	REFRIGERANT DISSIPATION BOARD
RDS	REFRIGERANT DISSIPATION SENSOR
RDV	REHEAT DISCHARGE VALVE
RH	RELATIVE HUMIDITY
RLV	REHEAT LIQUID VALVE
RNET	LOCAL ACCESS NETWORK
RVS	REVERSING VALVE SOLENOID
SAT	SUPPLY AIR TEMP SENSOR
SDP	SYSTEM DISCHARGE PRESSURE
SPRH	SPACE RELATIVE HUMIDITY
SPT	SPACE TEMPERATURE SENSOR
SPTO	SPACE TEMPERATURE OFFSET
SSP	SYSTEM SUCTION PRESSURE
SW	SWITCH
TB	TERMINAL BLOCK
TDR	TIME DELAY RELAY
TRAN	TRANSFORMER
UCB	UNIT CONTROL BOARD
W1	1st STAGE OF HEATING CALL
W2	2nd STAGE OF HEATING CALL
Y1	1st STAGE OF COOLING CALL
Y2	2nd STAGE OF COOLING CALL

Fig. 21 — Typical Single Phase 230V SystemVu Power Schematic (50FEQ 04-06 shown)

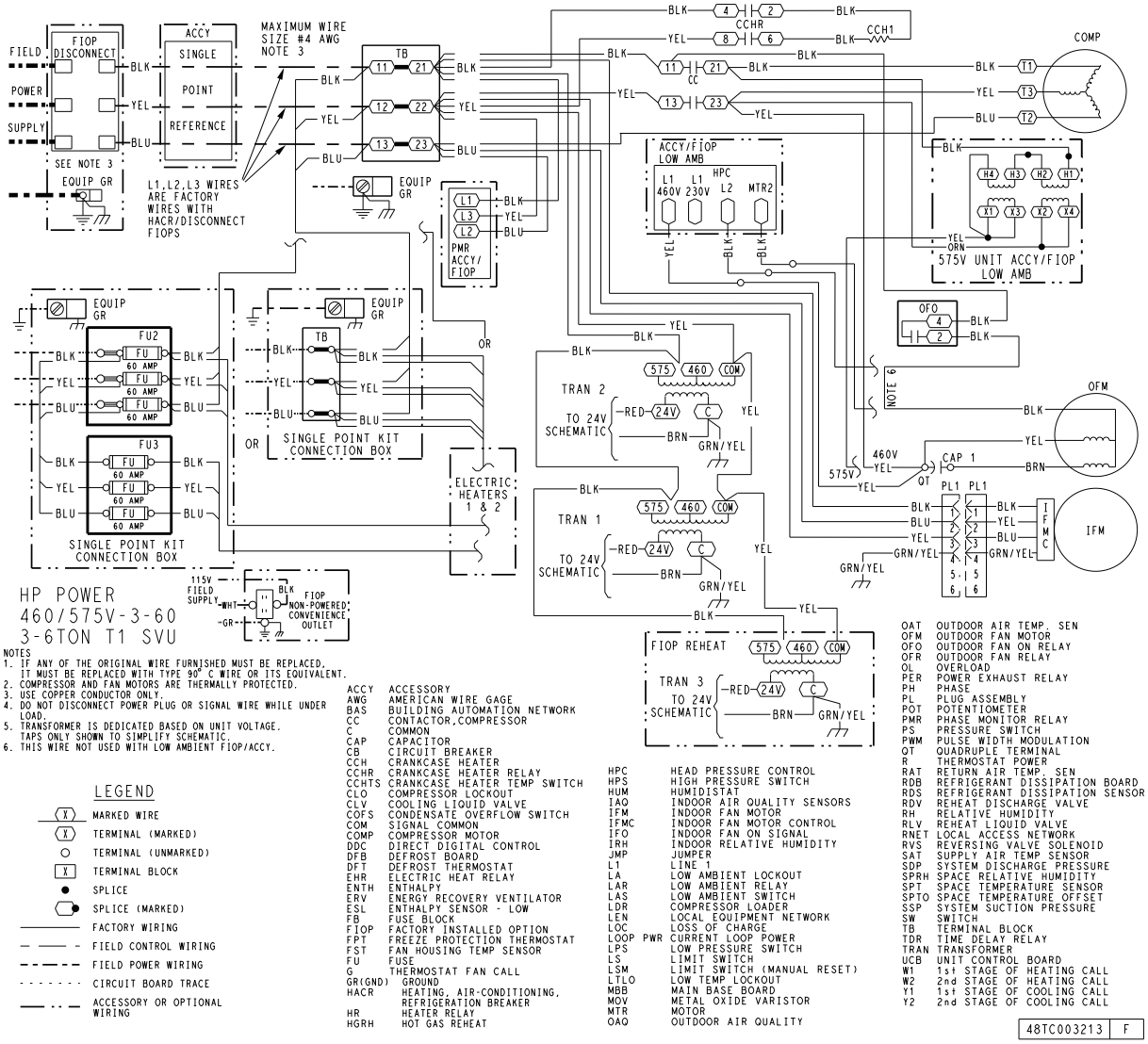

NOTES
1. IF ANY OF THE ORIGINAL WIRE FURNISHED MUST BE REPLACED, IT MUST BE REPLACED WITH TYPE 90° C WIRE OR ITS EQUIVALENT.
2. COMPRESSOR AND FAN MOTORS ARE THERMALLY PROTECTED.
3. USE COPPER CONDUCTOR ONLY.
4. DO NOT DISCONNECT POWER PLUG OR SIGNAL WIRE WHILE UNDER LOAD.
5. TRANSFORMER IS DEDICATED BASED ON UNIT VOLTAGE. TAPS ONLY SHOWN TO SIMPLIFY SCHEMATIC.
6. THIS WIRE NOT USED WITH LOW AMBIENT FIOP/ACCY.

LEGEND

- (X) MARKED WIRE
- (X) TERMINAL (MARKED)
- ○ TERMINAL (UNMARKED)
- [X] TERMINAL BLOCK
- ● SPLICE
- SPLICE (MARKED)
- FACTORY WIRING
- FIELD CONTROL WIRING
- FIELD POWER WIRING
- CIRCUIT BOARD TRACE
- ACCESSORY OR OPTIONAL WIRING

ACCY	ACCESSORY
AWG	AMERICAN WIRE GAGE
BAS	BUILDING AUTOMATION NETWORK
CC	CONTACTOR,COMPRESSOR
C	COMMON
CAP	CAPACITOR
CB	CIRCUIT BREAKER
CCH	CRANKCASE HEATER
CCHR	CRANKCASE HEATER RELAY
CCHTS	CRANKCASE HEATER TEMP SWITCH
CLO	COMPRESSOR LOCKOUT
CLV	COOLING LIQUID VALVE
COFS	CONDENSATE OVERFLOW SWITCH
COM	SIGNAL COMMON
COMP	COMPRESSOR MOTOR
DDC	DIRECT DIGITAL CONTROL
DFB	DEFROST BOARD
DFT	DEFROST THERMOSTAT
EHR	ELECTRIC HEAT RELAY
ENTH	ENTHALPY
ERV	ENERGY RECOVERY VENTILATOR
ESL	ENTHALPY SENSOR - LOW
FB	FUSE BLOCK
FIOP	FACTORY INSTALLED OPTION
FPT	FREEZE PROTECTION THERMOSTAT
FST	FAN HOUSING TEMP SENSOR
FU	FUSE
G	THERMOSTAT FAN CALL
GR(GND)	GROUND
HACR	HEATING, AIR-CONDITIONING, REFRIGERATION BREAKER
HR	HEATER RELAY
HGRH	HOT GAS REHEAT
HPC	HEAD PRESSURE CONTROL
HPS	HIGH PRESSURE SWITCH
HUM	HUMIDISTAT
IAQ	INDOOR AIR QUALITY SENSORS
IFM	INDOOR FAN MOTOR
IFMC	INDOOR FAN MOTOR CONTROL
IFO	INDOOR FAN ON SIGNAL
IRH	INDOOR RELATIVE HUMIDITY
JMP	JUMPER
L1	LINE 1
LA	LOW AMBIENT LOCKOUT
LAR	LOW AMBIENT RELAY
LAS	LOW AMBIENT SWITCH
LDR	COMPRESSOR LOADER
LEN	LOCAL EQUIPMENT NETWORK
LOC	LOSS OF CHARGE
LOOP PWR	CURRENT LOOP POWER
LPS	LOW PRESSURE SWITCH
LS	LIMIT SWITCH
LSM	LIMIT SWITCH (MANUAL RESET)
LTLO	LOW TEMP LOCKOUT
MBB	MAIN BASE BOARD
MOV	METAL OXIDE VARISTOR
MTR	MOTOR
OAQ	OUTDOOR AIR QUALITY
OAT	OUTDOOR AIR TEMP. SEN
OFM	OUTDOOR FAN MOTOR
OFO	OUTDOOR FAN ON RELAY
OFR	OUTDOOR FAN RELAY
OL	OVERLOAD
PER	POWER EXHAUST RELAY
PH	PHASE
PL	PLUG ASSEMBLY
POT	POTENTIOMETER
PMR	PHASE MONITOR RELAY
PS	PRESSURE SWITCH
PWM	PULSE WIDTH MODULATION
QT	QUADRUPLE TERMINAL
R	THERMOSTAT POWER
RAT	RETURN AIR TEMP. SEN
RDB	REFRIGERANT DISSIPATION BOARD
RDS	REFRIGERANT DISSIPATION SENSOR
RDV	REHEAT DISCHARGE VALVE
RH	RELATIVE HUMIDITY
RLV	REHEAT LIQUID VALVE
RNET	LOCAL ACCESS NETWORK
RVS	REVERSING VALVE SOLENOID
SAT	SUPPLY AIR TEMP SENSOR
SDP	SYSTEM DISCHARGE PRESSURE
SPRH	SPACE RELATIVE HUMIDITY
SPT	SPACE TEMPERATURE SENSOR
SPTO	SPACE TEMPERATURE OFFSET
SSP	SYSTEM SUCTION PRESSURE
SW	SWITCH
TB	TERMINAL BLOCK
TDR	TIME DELAY RELAY
TRAN	TRANSFORMER
UCB	UNIT CONTROL BOARD
W1	1st STAGE OF HEATING CALL
W2	2nd STAGE OF HEATING CALL
Y1	1st STAGE OF COOLING CALL
Y2	2nd STAGE OF COOLING CALL

48TC003213 | F

Fig. 22 — Typical 50FEQ 04-07 SystemVu Power Schematic (460/575V-3-60 shown)

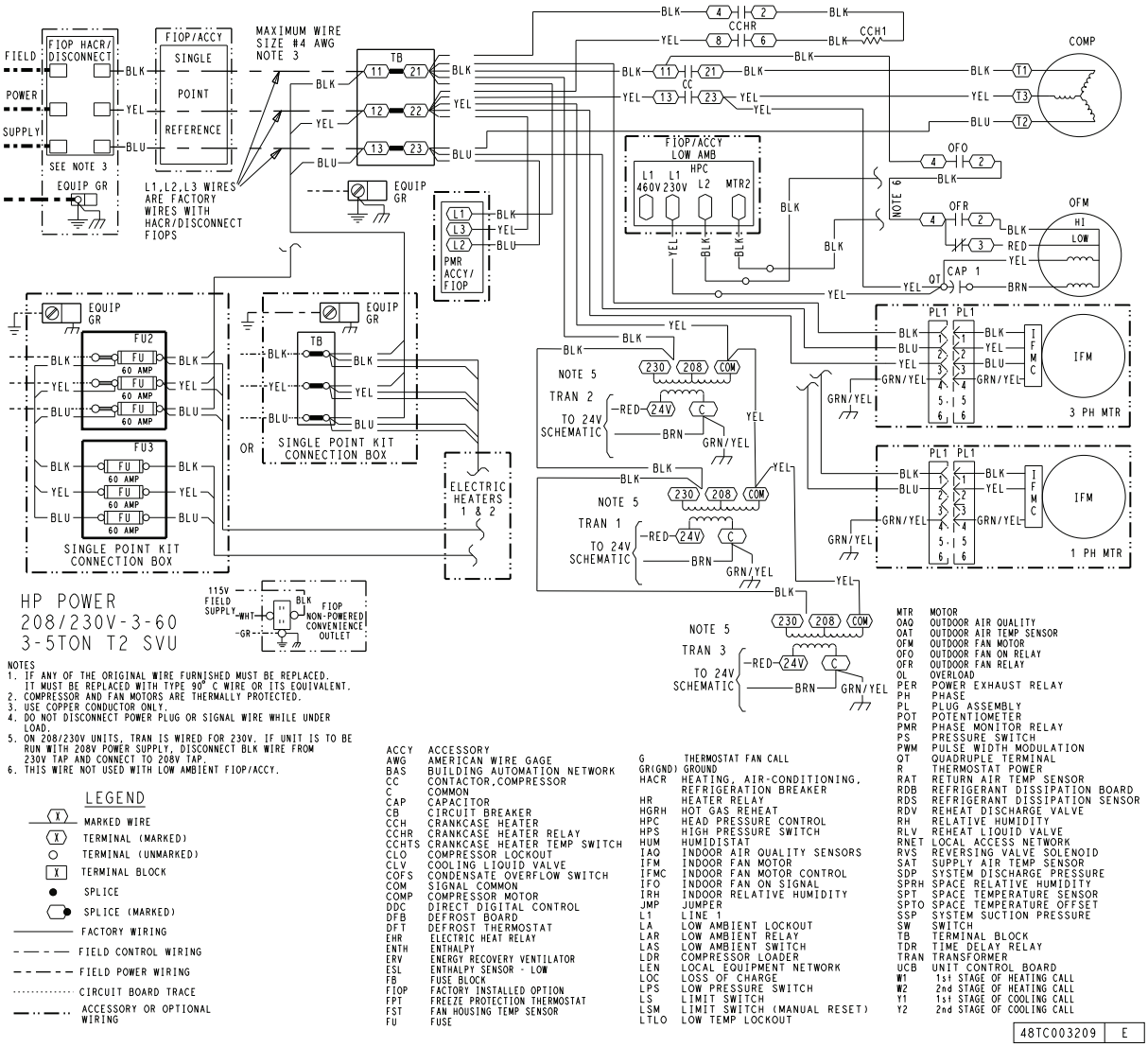

NOTES
1. IF ANY OF THE ORIGINAL WIRE FURNISHED MUST BE REPLACED. IT MUST BE REPLACED WITH TYPE 90° C WIRE OR ITS EQUIVALENT.
2. COMPRESSOR AND FAN MOTORS ARE THERMALLY PROTECTED.
3. USE COPPER CONDUCTOR ONLY.
4. DO NOT DISCONNECT POWER PLUG OR SIGNAL WIRE WHILE UNDER LOAD.
5. ON 208/230V UNITS, TRAN IS WIRED FOR 230V. IF UNIT IS TO BE RUN WITH 208V POWER SUPPLY, DISCONNECT BLK WIRE FROM 230V TAP AND CONNECT TO 208V TAP.
6. THIS WIRE NOT USED WITH LOW AMBIENT FIOP/ACCY.

LEGEND

- MARKED WIRE
- TERMINAL (MARKED)
- TERMINAL (UNMARKED)
- TERMINAL BLOCK
- SPLICE
- SPLICE (MARKED)
- FACTORY WIRING
- FIELD CONTROL WIRING
- FIELD POWER WIRING
- CIRCUIT BOARD TRACE
- ACCESSORY OR OPTIONAL WIRING

ACCY	ACCESSORY
AWG	AMERICAN WIRE GAGE
BAS	BUILDING AUTOMATION NETWORK
CC	CONTACTOR,COMPRESSOR
C	COMMON
CAP	CAPACITOR
CB	CIRCUIT BREAKER
CCH	CRANKCASE HEATER
CCHR	CRANKCASE HEATER RELAY
CCHTS	CRANKCASE HEATER TEMP SWITCH
CLO	COMPRESSOR LOCKOUT
CLV	COOLING LIQUID VALVE
COFS	CONDENSATE OVERFLOW SWITCH
COM	SIGNAL COMMON
COMP	COMPRESSOR MOTOR
DDC	DIRECT DIGITAL CONTROL
DFB	DEFROST BOARD
DFT	DEFROST THERMOSTAT
EHR	ELECTRIC HEAT RELAY
ENTH	ENTHALPY
ERV	ENERGY RECOVERY VENTILATOR
ESL	ENTHALPY SENSOR - LOW
FB	FUSE BLOCK
FIOP	FACTORY INSTALLED OPTION
FPT	FREEZE PROTECTION THERMOSTAT
FST	FAN HOUSING TEMP SENSOR
FU	FUSE
G	THERMOSTAT FAN CALL
GR(GND)	GROUND
HACR	HEATING, AIR-CONDITIONING, REFRIGERATION BREAKER
HR	HEATER RELAY
HGRH	HOT GAS REHEAT
HPC	HEAD PRESSURE CONTROL
HPS	HIGH PRESSURE SWITCH
HUM	HUMIDISTAT
IAQ	INDOOR AIR QUALITY SENSORS
IFM	INDOOR FAN MOTOR
IFMC	INDOOR FAN MOTOR CONTROL
IFO	INDOOR FAN ON SIGNAL
IRH	INDOOR RELATIVE HUMIDITY
JMP	JUMPER
L1	LINE 1
LA	LOW AMBIENT LOCKOUT
LAR	LOW AMBIENT RELAY
LAS	LOW AMBIENT SWITCH
LDR	COMPRESSOR LOADER
LEN	LOCAL EQUIPMENT NETWORK
LOC	LOSS OF CHARGE
LPS	LOW PRESSURE SWITCH
LS	LIMIT SWITCH
LSM	LIMIT SWITCH (MANUAL RESET)
LTLO	LOW TEMP LOCKOUT
MTR	MOTOR
OAQ	OUTDOOR AIR QUALITY
OAT	OUTDOOR AIR TEMP SENSOR
OFM	OUTDOOR FAN MOTOR
OFO	OUTDOOR FAN ON RELAY
OFR	OUTDOOR FAN RELAY
OL	OVERLOAD
PER	POWER EXHAUST RELAY
PH	PHASE
PL	PLUG ASSEMBLY
POT	POTENTIOMETER
PMR	PHASE MONITOR RELAY
PS	PRESSURE SWITCH
PWM	PULSE WIDTH MODULATION
QT	QUADRUPLE TERMINAL
R	THERMOSTAT POWER
RAT	RETURN AIR TEMP SENSOR
RDB	REFRIGERANT DISSIPATION BOARD
RDS	REFRIGERANT DISSIPATION SENSOR
RDV	REHEAT DISCHARGE VALVE
RH	RELATIVE HUMIDITY
RLV	REHEAT LIQUID VALVE
RNET	LOCAL ACCESS NETWORK
RVS	REVERSING VALVE SOLENOID
SAT	SUPPLY AIR TEMP SENSOR
SDP	SYSTEM DISCHARGE PRESSURE
SPRH	SPACE RELATIVE HUMIDITY
SPT	SPACE TEMPERATURE SENSOR
SPTO	SPACE TEMPERATURE OFFSET
SSP	SYSTEM SUCTION PRESSURE
SW	SWITCH
TB	TERMINAL BLOCK
TDR	TIME DELAY RELAY
TRAN	TRANSFORMER
UCB	UNIT CONTROL BOARD
W1	1st STAGE OF HEATING CALL
W2	2nd STAGE OF HEATING CALL
Y1	1st STAGE OF COOLING CALL
Y2	2nd STAGE OF COOLING CALL

48TC003209 | E

Fig. 23 — Typical 50GEQ 04-06 SystemVu Power Schematic (208/230V-3-60 shown)

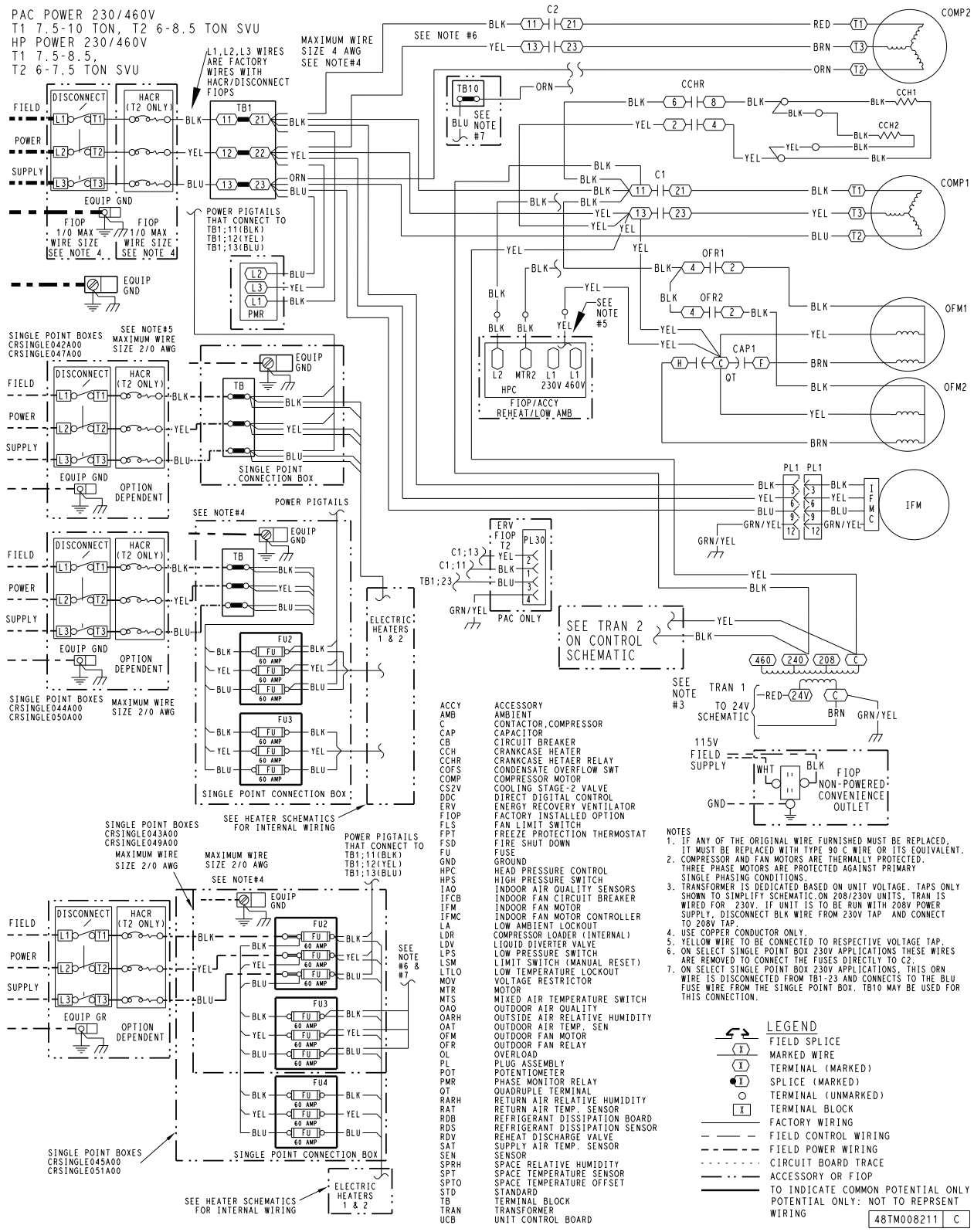

ACCY	ACCESSORY
AMB	AMBIENT
C	CONTACTOR,COMPRESSOR
CAP	CAPACITOR
CB	CIRCUIT BREAKER
CCH	CRANKCASE HEATER
CCHR	CRANKCASE HETAER RELAY
COFS	CONDENSATE OVERFLOW SWT
COMP	COMPRESSOR MOTOR
CS2V	COOLING STAGE-2 VALVE
DDC	DIRECT DIGITAL CONTROL
ERV	ENERGY RECOVERY VENTILATOR
FIOP	FACTORY INSTALLED OPTION
FLS	FAN LIMIT SWITCH
FPT	FREEZE PROTECTION THERMOSTAT
FSD	FIRE SHUT DOWN
FU	FUSE
GND	GROUND
HPC	HEAD PRESSURE CONTROL
HPS	HIGH PRESSURE SWITCH
IAQ	INDOOR AIR QUALITY SENSORS
IFCB	INDOOR FAN CIRCUIT BREAKER
IFM	INDOOR FAN MOTOR
IFMC	INDOOR FAN MOTOR CONTROLLER
LA	LOW AMBIENT LOCKOUT
LDR	COMPRESSOR LOADER (INTERNAL)
LDV	LIQUID DIVERTER VALVE
LPS	LOW PRESSURE SWITCH
LSM	LIMIT SWITCH (MANUAL RESET)
LTLO	LOW TEMPERATURE LOCKOUT
MOV	VOLTAGE RESTRICTOR
MTR	MOTOR
MTS	MIXED AIR TEMPERATURE SWITCH
OAQ	OUTDOOR AIR QUALITY
OARH	OUTSIDE AIR RELATIVE HUMIDITY
OAT	OUTDOOR AIR TEMP. SEN
OFM	OUTDOOR FAN MOTOR
OFR	OUTDOOR FAN RELAY
OL	OVERLOAD
PL	PLUG ASSEMBLY
POT	POTENTIOMETER
PMR	PHASE MONITOR RELAY
QT	QUADRUPLE TERMINAL
RARH	RETURN AIR RELATIVE HUMIDITY
RAT	RETURN AIR TEMP. SENSOR
RDB	REFRIGERANT DISSIPATION BOARD
RDS	REFRIGERANT DISSIPATION SENSOR
RDV	REHEAT DISCHARGE VALVE
SAT	SUPPLY AIR TEMP. SENSOR
SEN	SENSOR
SPRH	SPACE RELATIVE HUMIDITY
SPT	SPACE TEMPERATURE SENSOR
SPTO	SPACE TEMPERATURE OFFSET
STD	STANDARD
TB	TERMINAL BLOCK
TRAN	TRANSFORMER
UCB	UNIT CONTROL BOARD

NOTES
1. IF ANY OF THE ORIGINAL WIRE FURNISHED MUST BE REPLACED, IT MUST BE REPLACED WITH TYPE 90 C WIRE OR ITS EQUIVALENT.
2. COMPRESSOR AND FAN MOTORS ARE THERMALLY PROTECTED. THREE PHASE MOTORS ARE PROTECTED AGAINST PRIMARY SINGLE PHASING CONDITIONS.
3. TRANSFORMER IS DEDICATED BASED ON UNIT VOLTAGE. TAPS ONLY SHOWN TO SIMPLIFY SCHEMATIC.ON 208/230V UNITS, TRAN IS WIRED FOR 230V. IF UNIT IS TO BE RUN WITH 208V POWER SUPPLY, DISCONNECT BLK WIRE FROM 230V TAP AND CONNECT TO 208V TAP.
4. USE COPPER CONDUCTOR ONLY.
5. YELLOW WIRE TO BE CONNECTED TO RESPECTIVE VOLTAGE TAP.
6. ON SELECT SINGLE POINT BOX 230V APPLICATIONS THESE WIRES ARE REMOVED TO CONNECT THE FUSES DIRECTLY TO C2.
7. ON SELECT SINGLE POINT BOX 230V APPLICATIONS, THIS ORN WIRE IS DISCONNECTED FROM TB1-23 AND CONNECTS TO THE BLU FUSE WIRE FROM THE SINGLE POINT BOX. TB10 MAY BE USED FOR THIS CONNECTION.

LEGEND

	FIELD SPLICE
X	MARKED WIRE
X	TERMINAL (MARKED)
X	SPLICE (MARKED)
	TERMINAL (UNMARKED)
X	TERMINAL BLOCK
	FACTORY WIRING
	FIELD CONTROL WIRING
	FIELD POWER WIRING
	CIRCUIT BOARD TRACE
	ACCESSORY OR FIOP
	TO INDICATE COMMON POTENTIAL ONLY
	POTENTIAL ONLY: NOT TO REPRSENT WIRING

48TM008211 C

Fig. 24 — Typical 50FEQ 08-09 and 50GEQ 07-08 SystemVu Power Schematic (230/460v shown)

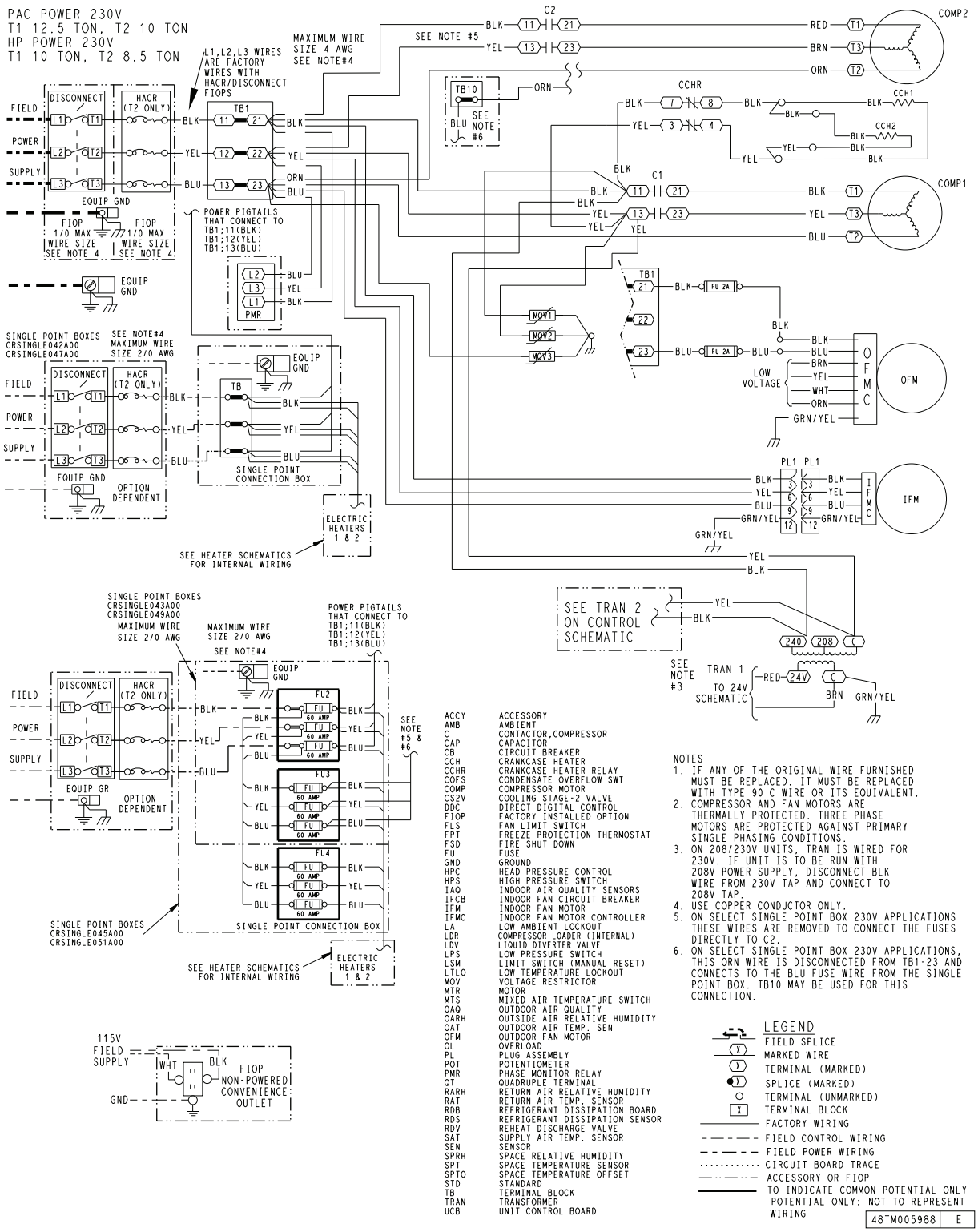

ACCY	ACCESSORY
AMB	AMBIENT
C	CONTACTOR,COMPRESSOR
CAP	CAPACITOR
CB	CIRCUIT BREAKER
CCH	CRANKCASE HEATER
CCHR	CRANKCASE HEATER RELAY
COFS	CONDENSATE OVERFLOW SWT
COMP	COMPRESSOR MOTOR
CS2V	COOLING STAGE-2 VALVE
DDC	DIRECT DIGITAL CONTROL
FIOP	FACTORY INSTALLED OPTION
FLS	FAN LIMIT SWITCH
FPT	FREEZE PROTECTION THERMOSTAT
FSD	FIRE SHUT DOWN
FU	FUSE
GND	GROUND
HPC	HEAD PRESSURE CONTROL
HPS	HIGH PRESSURE SWITCH
IAQ	INDOOR AIR QUALITY SENSORS
IFCB	INDOOR FAN CIRCUIT BREAKER
IFM	INDOOR FAN MOTOR
IFMC	INDOOR FAN MOTOR CONTROLLER
LA	LOW AMBIENT LOCKOUT
LDR	COMPRESSOR LOADER (INTERNAL)
LDV	LIQUID DIVERTER VALVE
LPS	LOW PRESSURE SWITCH
LSM	LIMIT SWITCH (MANUAL RESET)
LTLO	LOW TEMPERATURE LOCKOUT
MOV	VOLTAGE RESTRICTOR
MTR	MOTOR
MTS	MIXED AIR TEMPERATURE SWITCH
OAQ	OUTDOOR AIR QUALITY
OARH	OUTSIDE AIR RELATIVE HUMIDITY
OAT	OUTDOOR AIR TEMP. SEN
OFM	OUTDOOR FAN MOTOR
OL	OVERLOAD
PL	PLUG ASSEMBLY
POT	POTENTIOMETER
PMR	PHASE MONITOR RELAY
QT	QUADRUPLE TERMINAL
RARH	RETURN AIR RELATIVE HUMIDITY
RAT	RETURN AIR TEMP. SENSOR
RDB	REFRIGERANT DISSIPATION BOARD
RDS	REFRIGERANT DISSIPATION SENSOR
RDV	REHEAT DISCHARGE VALVE
SAT	SUPPLY AIR TEMP. SENSOR
SEN	SENSOR
SPRH	SPACE RELATIVE HUMIDITY
SPT	SPACE TEMPERATURE SENSOR
SPTO	SPACE TEMPERATURE OFFSET
STD	STANDARD
TB	TERMINAL BLOCK
TRAN	TRANSFORMER
UCB	UNIT CONTROL BOARD

NOTES
1. IF ANY OF THE ORIGINAL WIRE FURNISHED MUST BE REPLACED. IT MUST BE REPLACED WITH TYPE 90 C WIRE OR ITS EQUIVALENT.
2. COMPRESSOR AND FAN MOTORS ARE THERMALLY PROTECTED. THREE PHASE MOTORS ARE PROTECTED AGAINST PRIMARY SINGLE PHASING CONDITIONS.
3. ON 208/230V UNITS, TRAN IS WIRED FOR 230V. IF UNIT IS TO BE RUN WITH 208V POWER SUPPLY, DISCONNECT BLK WIRE FROM 230V TAP AND CONNECT TO 208V TAP.
4. USE COPPER CONDUCTOR ONLY.
5. ON SELECT SINGLE POINT BOX 230V APPLICATIONS THESE WIRES ARE REMOVED TO CONNECT THE FUSES DIRECTLY TO C2.
6. ON SELECT SINGLE POINT BOX 230V APPLICATIONS, THIS ORN WIRE IS DISCONNECTED FROM TB1-23 AND CONNECTS TO THE BLU FUSE WIRE FROM THE SINGLE POINT BOX. TB10 MAY BE USED FOR THIS CONNECTION.

LEGEND

	FIELD SPLICE
(X)	MARKED WIRE
(X)	TERMINAL (MARKED)
(X)	SPLICE (MARKED)
○	TERMINAL (UNMARKED)
[X]	TERMINAL BLOCK
———	FACTORY WIRING
- - - -	FIELD CONTROL WIRING
— — —	FIELD POWER WIRING
·····	CIRCUIT BOARD TRACE
—··—··—	ACCESSORY OR FIOP
═══	TO INDICATE COMMON POTENTIAL ONLY POTENTIAL ONLY: NOT TO REPRESENT WIRING

48TM005988 | E

Fig. 25 — Typical 50FEQ 12 and 50GEQ 09 SystemVu Power Schematic (230v shown)

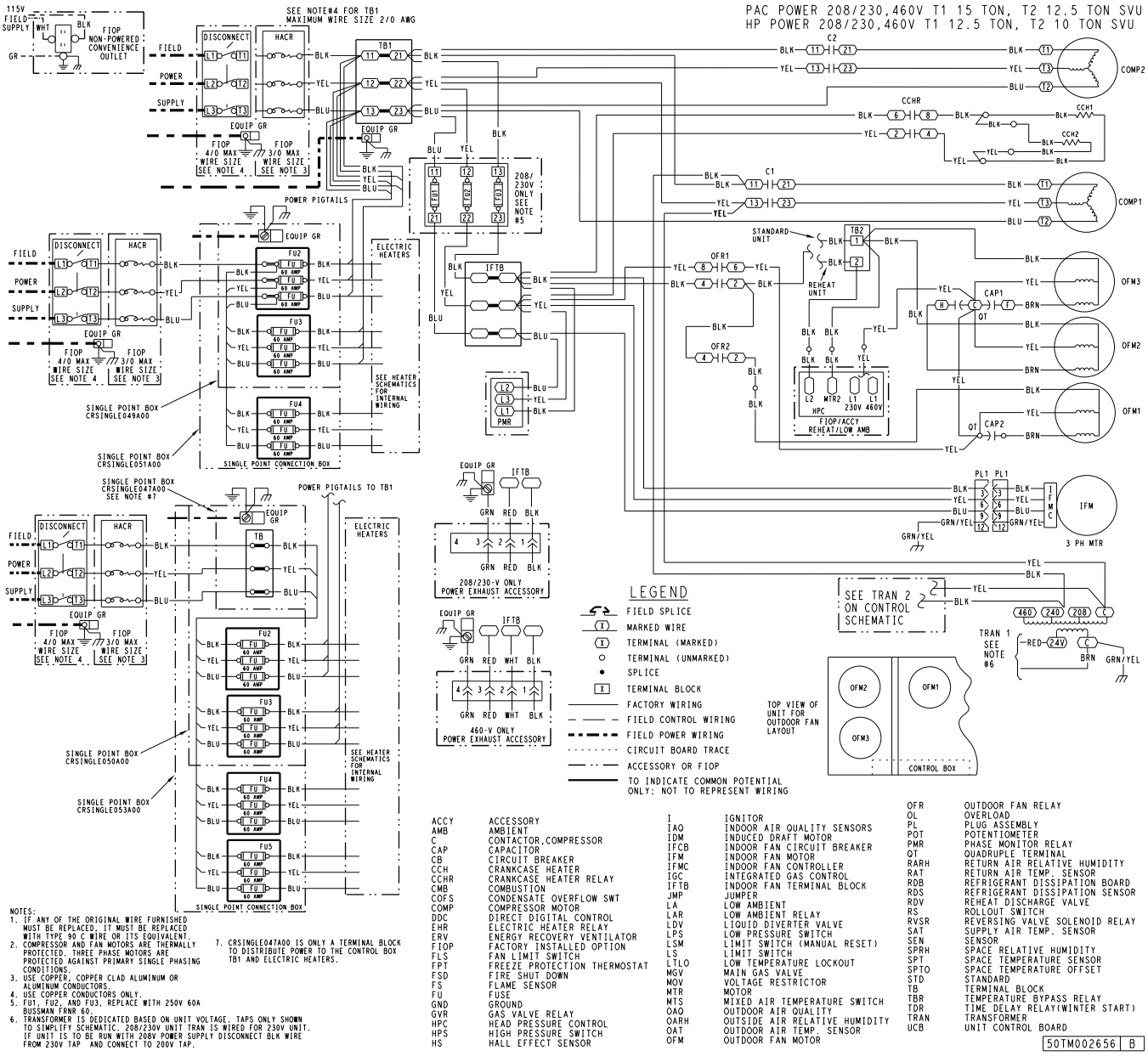

Fig. 26 — Typical 50FEQ 14 and 50GEQ 12 SystemVu Power Schematic

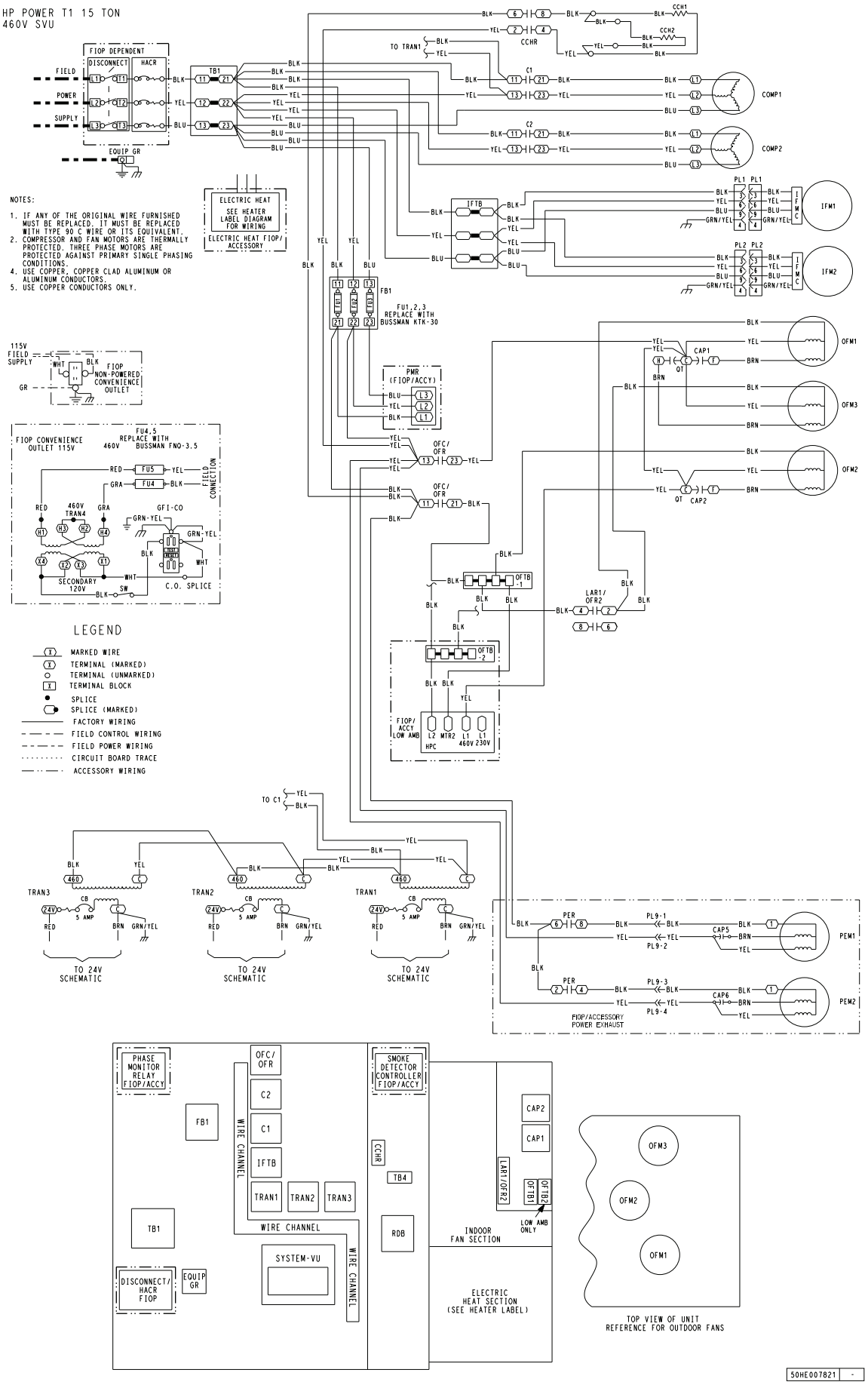

Fig. 27 — Typical 50FEQ 17 SystemVu Power Schematic (460v shown)

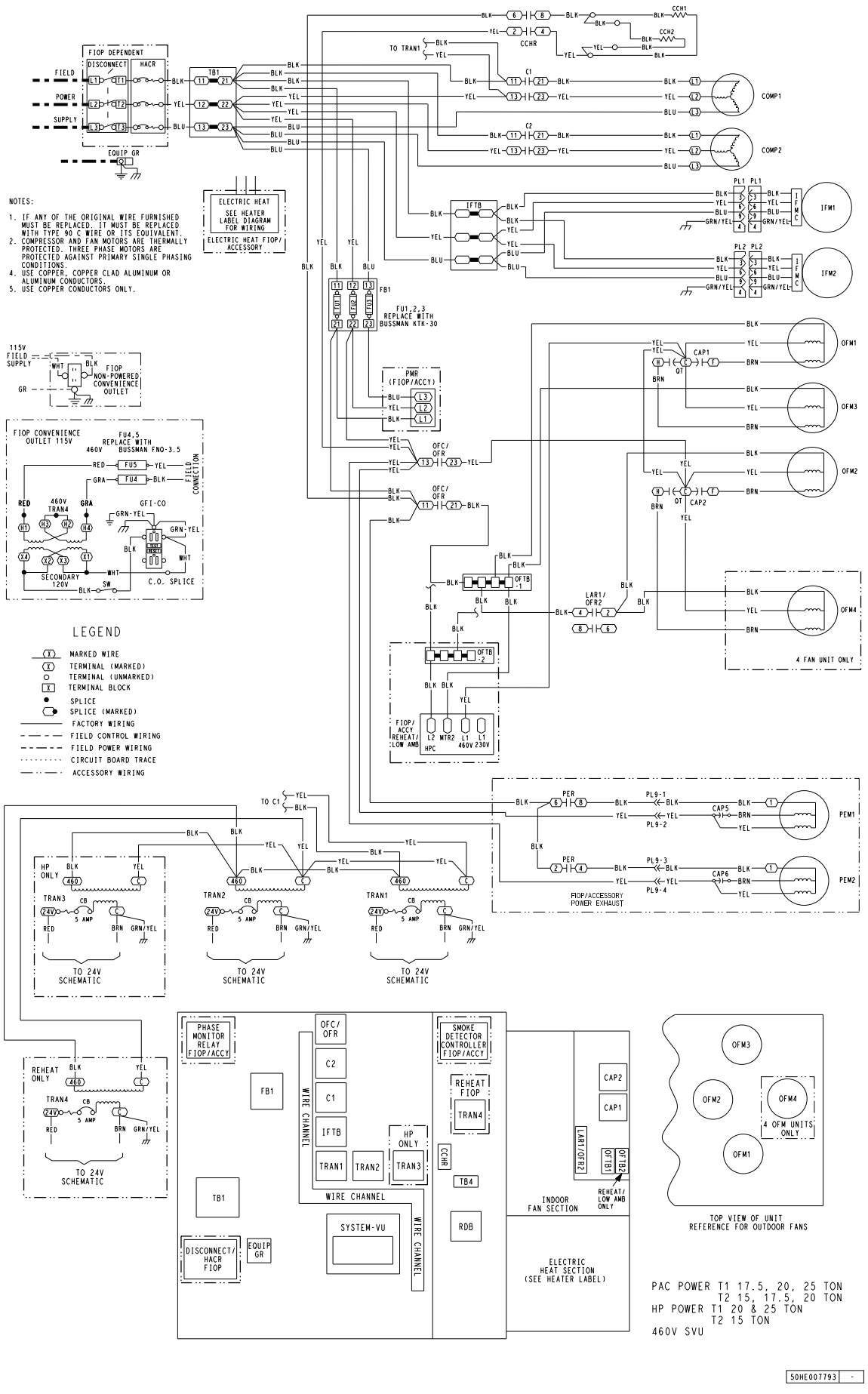

Fig. 28 — Typical 50FEQ 24-28 SystemVu Power Schematic (460v shown)

Main Base Board (MBB)

See Fig. 29 and Tables 23 and 24. The majority of the I/O is connected to the MBB which executes the controls operation of the unit from the software that is loaded onto it.

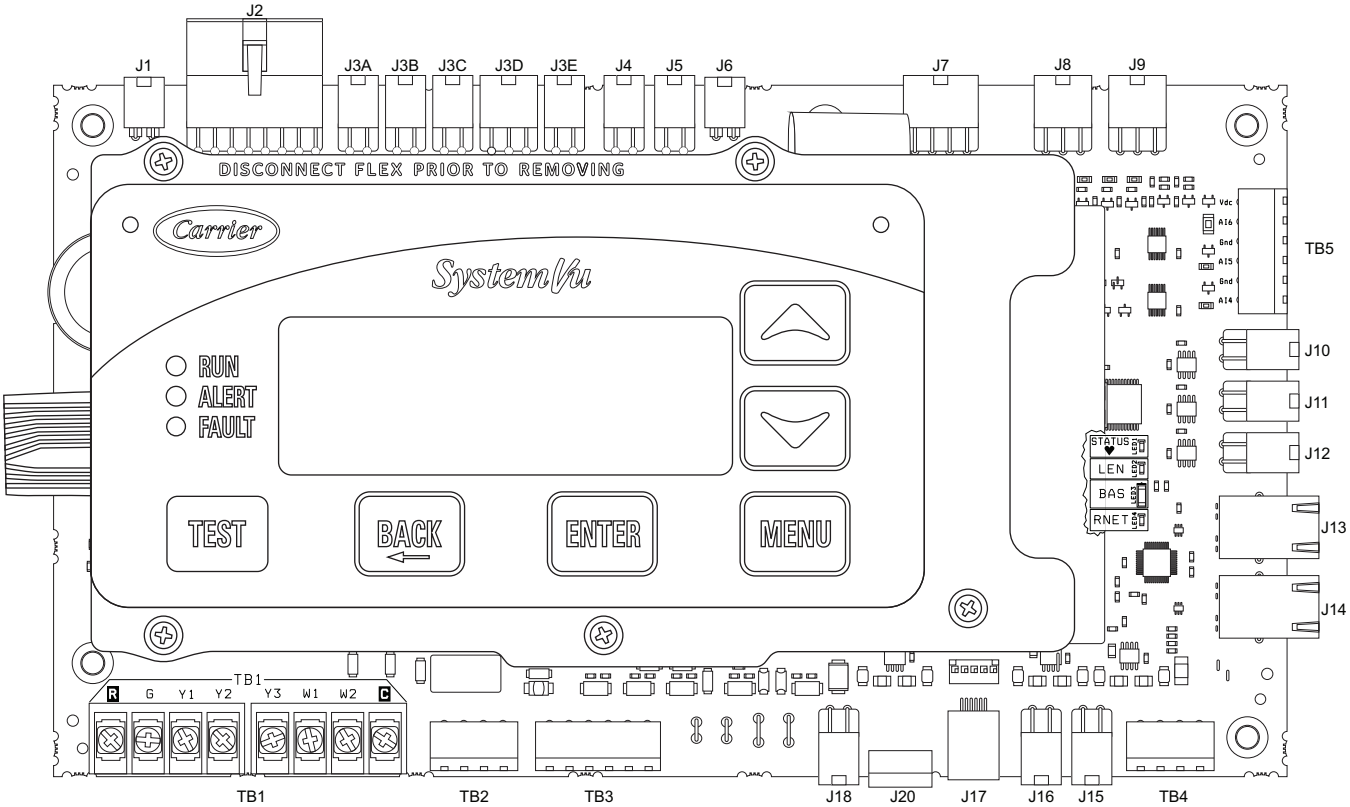

Fig. 29 — Main Base Board (MBB)

Table 23 — Main Base Board Dependent Relay Outputs

RELAY #	CONNECTION	POINT NAME (based on unit model)				
		FEQ 04-06	FEQ 07	GEQ 04-06	FEQ08-09, FEQ 14-28 GEQ07-08, GEQ12	FEQ 12 GEQ09
3	J3D 3,6	REVERSING VALVE (RVS_A)	REVERSING VALVE (RVS_A)	REVERSING VALVE (RVS_A)	ODF RELAY 2 (OFR2)	ODF RELAY 2 (OFR2)
4	J3D 2,5	NOT USED	NOT USED	LIQUID LINE VALVE (LLSV)	ODF RELAY (OFR)	ODF RELAY (OFR)
5	J3D 1,4	ODF ON/OFF RELAY (ODF_ON)	ODF ON/OFF RELAY (ODF_ON)	ODF ON/OFF RELAY (ODF_ON)	CCH RELAY (CCHR1)	ODF RELAY 3 (OFR3)
8	J3B 1,3	CCH RELAY (CCHR1)	CCH RELAY (CCHR1)	CCH RELAY (CCHR1)	COMPRESSOR A2 (COMP_A2)	COMPRESSOR A2 (COMP_A2)
9	J3A 2,4	NOT USED	COMP A LOADER (COMP_ALD)	COMP A LOADER (COMP_ALD)	REVERSING VALVE (RVS_A)	REVERSING VALVE (RVS_A)
10	J3A 1,3	NOT USED	NOT USED	ODF RELAY (OFR)	NOT USED	NOT USED

Table 24 — Main Base Board (MBB) Connections

DISPLAY NAME	SENSOR LOCATION	I/O TYPE	POINT NAME	CONNECTION PIN NUMBER
INPUTS				
Input power from TRAN2	Control Box	24 VAC		J2, 1 and 8
Configurable (COFS)	Drain Pan	24 VAC	COFS	J4, 1- 4
Configurable (FIRE SHUTDOWN)	Supply/Return/Space	Switch Input	FIREDOWN	J5, 1- 4
DEFROST SWITCH	Outdoor Coil	Switch Input	DFRST_SW	J6, 1- 2
Configurable (IAQ LEVEL)	Return/Space	0- 20 mA	IAQ	J7, 1, 5-6
Configurable (OARH LEVEL	Economizer	0- 20 mA	OARH	J7, 2, 6-7
ECON ACT POSITION	Economizer	2- 10vdc	DAMPPOS	J7, 3, 8
FAN SUPPLY TEMP	Indoor fan deck	10k thermistor	FST	J8, 1, 4
RETURN AIR TEMP	Return	10k thermistor	RAT	J8, 2, 5
OUTDOOR AIR TEMP	Outdoor coil	10k thermistor	OAT	J8, 3, 6
CIR.A SUC. PRESS	Circuit A Suction pipe	0-5 VDC pressure transducer	SSP_A	J9, 1- 2, 5
CIR.A DIS. PRESS	Circuit A Discharge pipe	0-5 VDC pressure transducer	SDP_A	J9, 4- 3, 6
Configurable		0- 20 mA		TB5, 4- 6
SLIDER OFFSET VAL	Space	10k thermistor	SPTO	TB5, 2- 3
SPACE TEMPERATURE	Space	10k thermistor	SPACE_T	TB5, 1- 2
CIR.A HPS Circuit A	Discharge pipe	Switch Input	CIRA_HPS	QC, 1-2J18, 1, 3
IDF LIMIT SWITCH	Indoor Fan	Switch Input	IDF_LSM	QC, 3-4J18, 2,4
DISSIPATION INPUT	Return Air Section	Switch Input	LEAK_DTC	QC-1,2 J18-1,3 and QC-3,4 J18-2,4
Configurable (FILTER STATUS SW)	FIOP/Field-installed	Switch Input	FILTSAT	TB3, 1- 2
Configurable	Field-installed	Switch Input		TB3, 3- 4
Configurable (PHASE MONITOR SW)	Control Box	Switch Input	PWR_STAT	TB3, 5- 6
TSTAT G INPUT	Space	Switch Input	G	TB1, G
TSTAT Y1 INPUT	Space	Switch Input	Y1	TB1, Y1
TSTAT Y2 INPUT	Space	Switch Input	Y2	TB1, Y2
Configurable (HUMIDISTAT)	Field-Installed	Switch Input	HUMDSTAT	TB1, Y3
TSTAT W1 INPUT	Space	Switch Input	W1	TB1, W1
TSTAT W2 INPUT	Space	Switch Input	W2	TB1, W2
OUTPUTS				
Optional power out	Not Used	24 VAC		J1, 1- 2
ECON CMD POSITION		0- 20 mA	DAMPCMD	J7, 4, 8
COMMANDED IDF RPM	Indoor fan section	PWM1	FSPD_RPM	J10, 1-4
not used		PWM2		J11, 1-4
not used		PWM3		J12, 1-4
Configurable (ALARM RELAY)		Relay 11	ALMOUT	TB2, 3- 4
Dependent Relay (see Table 23)		Relay 10		J3A, 1, 3
Dependent Relay (see Table 23)	Not Used	Relay 9		J3A, 2, 4
Dependent Relay (see Table 23)	Not Used	Relay 8		J3B, 1, 3
COMPRESSOR A1	Not Used	Relay 7	COMP_A1	J3B, 2, 4
Configurable (PE1 RELAY)		Relay 6	PE1	J3C, 1- 4
Dependent Relay (see Table 23)		Relay 5		J3D, 1, 4
Dependent Relay (see Table 23)		Relay 4		J3D, 2, 5
Dependent Relay (see Table 23)		Relay 3		J3D, 3, 6
HEAT 2 RELAY		Relay	HEAT_2	J3E, 1, 3
HEAT 1 RELAY		Relay	HEAT_1	J3E, 2, 4
COMMUNICATION				
Building Automated System (BAS)	Building	Communication		TB4, 1- 5
Ethernet	Not Used	Communication		J13, J14
Expansion LEN Bus	Not Used	Communication		J15, 1-4
Expansion LEN Bus	Not Used	Communication		J16, 1-4
Local Equipment Network (LEN)		Communication		J17
RNET Sensors	Building	Communication		J20, 1-4
Display Copper Cable		Communication		J23
RNET Service Access		Communication		J24, 1-5
DISPLAY CONNECTIONS				
Display Copper Cable		Communication		J1
Local Equipment Network (LEN)		Communication		J2
USB- A		Communication		J3
USB- B	Not Used	Communication		J4
Keypad Ribbon Cable		Communication		J6

Protective Devices

COMPRESSOR PROTECTION

Overcurrent

Each compressor has internal line break motor protection.

Overtemperature

Each compressor has an internal protector to protect it against excessively high discharge gas temperatures.

High-Pressure Switch

If the high-pressure switch trips, the compressor will shut down and the Circuit A High Pressure Alert will activate. Refer to the alarm section for the High pressure alert.

EVAPORATOR FAN MOTOR PROTECTION

The ECM motor is protected from locked rotor and overcurrent protection through the electronic control module attached to the motor.

CONDENSER FAN MOTOR PROTECTION

The motor is internally protected against overload.

LEAK PROTECTION

These units are equipped with a leak detection and dissipation system. This system is UL certified with specific sensors to detect and dissipate refrigerant that leaks in the indoor air section of the unit. Refer to the alarm section for F220 and the base unit installation instructions for more details.

SATURATED SUCTION PRESSURE (SSP)

If the SSP for a particular circuit is reading below the alarm set point for an extended period of time, that circuit will be shut down. After 15 minutes, the alarm will automatically reset. If this alarm occurs 3 times consecutively, the circuit will remain locked out until an alarm reset is initiated via CCN or manually via the SystemVu controller display (see Alarms and Alerts section for more details).

CONDENSATE OVERFLOW SWITCH (COFS)

A separate factory installed device can detect a full drain pan. This device consists of a pan sensor to detect the water level and a relay control switch to read the sensor. The control switch is located in the supply fan section and feeds into the SystemVu control to trip a condensate overflow fault. The relay switch is a normally open device that closes when power is applied. If the sensor detects high water levels for 10 seconds straight, it will open the contact removing the input provided to the SystemVu control. The switch will also turn its red LED on. If the water level is low enough for 5 minutes the relay will close again applying the input back to the SystemVu controller. A blinking red LED on the switch indicates that the sensor has been disconnected.

Space Mounted Sensors

SPACE TEMPERATURE SENSOR (T-55)

The T-55 space temperature sensor (part no. 33ZCT55SPT) is a field-installed accessory. The sensor is installed on a building interior wall to measure room air temperature. The T-55 sensor also includes an override button on the front cover to permit occupants to override the Unoccupied Schedule (if programmed).

TB5-1 . . . . . Sensor Input

TB5-2 . . . . . Sensor Common

SPACE TEMPERATURE SENSOR (T-56)

The T-56 space temperature sensor (part no. 33ZCT56SPT) is a field-installed accessory. This sensor includes a sliding scale on the front cover that permits an occupant to adjust the space temperature set point remotely. The T-56 sensor also includes an override button on the front cover to allow occupants to override the unoccupied schedule (if programmed).

TB5-1 . . . . . Sensor Input

TB5-2 . . . . . Sensor Common

TB5-2 . . . . . Setpoint Offset Input

Space Temperature Sensor Averaging

See Fig. 30 for space temperature averaging with T-55 sensors only. If the use of one T-56 sensor is required, refer to Fig. 31.

ZS SPACE SENSOR

The ZS Standard, Plus, or Pro can be wired into J20 or J24 of the SystemVu controller, J20 provides an easy field connection plug. A maximum of 5 ZS sensors can be connected but a separate power supply may be needed. Use the ZS SENSOR CFG menu (***SETTINGS → NETWORK SETTINGS***) when setting up the ZS sensors in SystemVu. The Sensor addresses have to be unique and set in the actual sensors via DIP also. The Typical default for the ZS Sensor is address 1. Follow the ZS installation instruction for further details on the sensors. ZS sensor data can be monitored on SystemVu in the ZS Sensor Info menu (***INPUTS → NETWORK → ZS SENSOR INFO***).

J20-1 . . . . . Sensor Common

J20-2 . . . . . Sensor Communication Positive (+)

J20-3 . . . . . Sensor Communication Negative (-)

J20-4. . . . . Sensor +12vdc Power

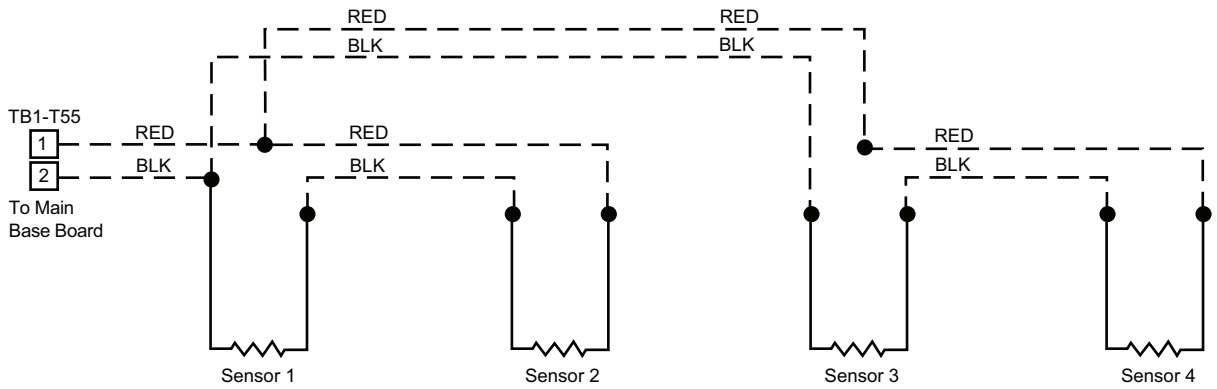

Space Temperature Averaging — 4 T-55 Sensor Application

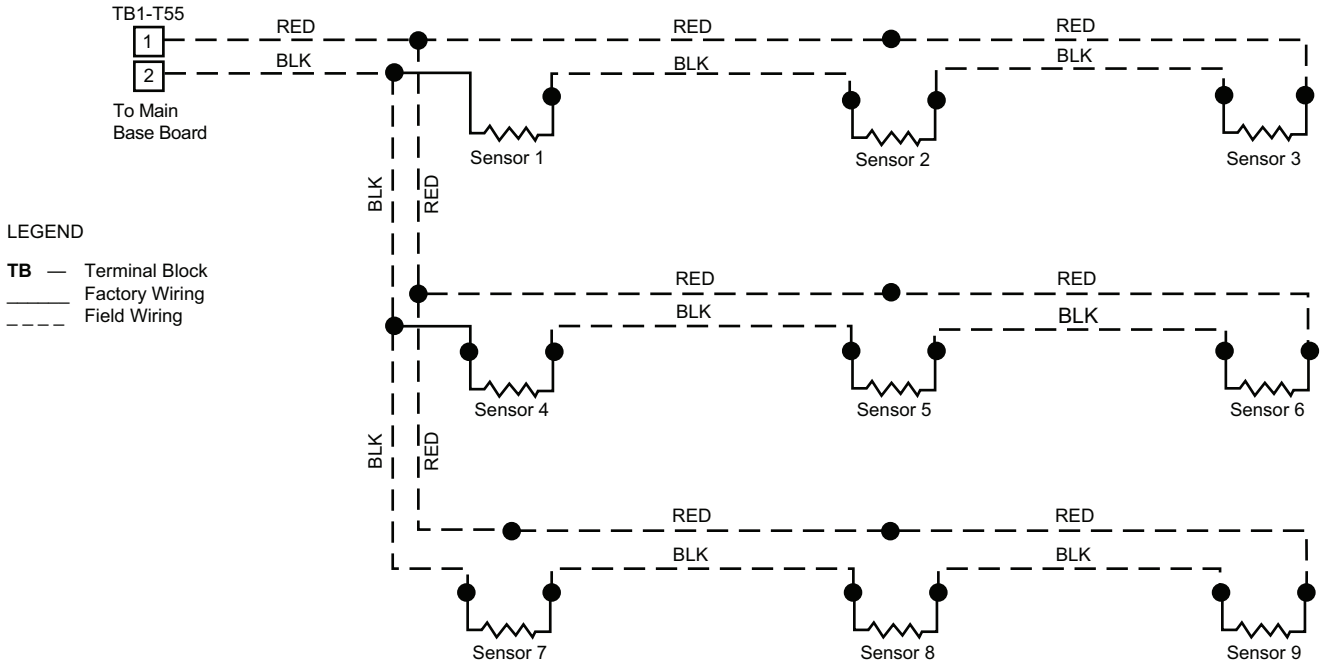

Space Temperature Averaging — 9 T-55 Sensor Application

Fig. 30 — Space Temperature Sensor Averaging

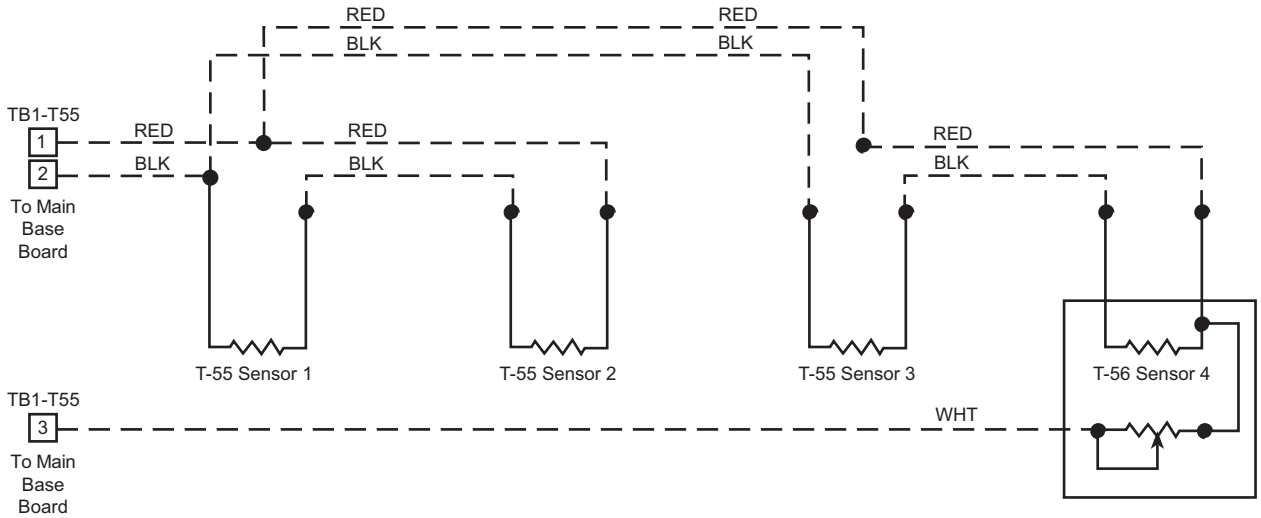

Fig. 31 — Space Temperature Sensor Averaging with 3 T-55 Sensors and One T-56 Sensor

ZS Motion Sensor

The ZS motion sensor(s) can be integrated with SystemVu and paired with a local schedule, used as a standalone remote occupancy sensor, or used to offset occupied setpoints. The motion sensor will transition the SystemVu controller from "unoccupied" to an "occupied" state when used as a schedule override or remote occupancy. When used as offset setpoints the occupancy state will not change. The ***ZSM SENSOR CONFIG*** setting tells the control which of the three types of application is desired with the motion sensors.

The ZS motion sensors have a built in 5 minute off delay. SystemVu as the ability to add time to this off delay with the ***MOTION TIMEOUT*** setting. When using the sensor with a local schedule or standalone remote occupancy sensor, the control will transition to an "unoccupied" state after this ***MOTION TIMEOUT*** time with no motion detection. When using the sensor for temperature offset only, the control will offset the occupied setpoints after this ***MOTION TIMEOUT*** time with no motion detected. Sensor placement and application is important to keep the space tempered appropriately. Sensor placement should include an unobstructed view of motion in the desired space being served. If the space is large, multiple sensors (up to 5) may be used to cover the area. The ZS motion sensor should only be used in a space that has constant motion when it is occupied.

ZS MOTION SENSOR SCHEDULE OVERRIDE

ZS motion sensor(s) can be utilized with a SystemVu local schedule. During this operation the SystemVu controller will switch between "occupied" and "unoccupied" modes based on the local schedule. The ZS motion sensor(s) will override the local schedule during "unoccupied" mode forcing SystemVu to transition from "unoccupied" to an "occupied" state and following the occupied heating and cooling setpoints.

NOTE: The following steps are menus followed by → **"Settings"** for enabling ZS motion sensor control with a local schedule.

1. ***SETTINGS → UNIT CONFIGURATION → GENERAL → UNIT CONTROL TYPE →*** **Space Sen (1)**
2. ***SETTINGS → UNIT CONFIGURATIONS → SWITCH INPUT CONFIGS → REMOTE OCC CHAN →*** **None (0)**
3. ***SETTINGS → SCHEDULE → SCHEDULE NUM →*** **Local Schedule (1)**
4. ***SETTINGS → NETWORK SETTINGS → ZS SENSOR CFG → ZSM SENSOR CONFIG →*** **LOCOCC (2)**

ZS MOTION SENSOR STANDALONE REMOTE OCCUPANCY SENSOR

ZS motion sensor(s) can be utilized as a standalone remote occupancy switch. This will allow SystemVu to remain in an "unoccupied" state and use the ZS motion sensor(s) to "occupy" SystemVu. In this application SystemVu will maintain the space between its "unoccupied heating" and "unoccupied cooling" setpoints when the space in not in use. When the motion sensor is activated SystemVu will occupy the unit and follow the occupied heating and cooling setpoints.

NOTE: The following steps are menus followed by → **"Settings"** for enabling ZS motion sensor control only.

1. ***SETTINGS → UNIT CONFIGURATION → GENERAL → UNIT CONTROL TYPE →*** **Space Sen (1)**
2. ***SETTINGS → UNIT CONFIGURATIONS → SWITCH INPUT CONFIGS → REMOTE OCC CHAN →*** **(choose any open DI between DI-1 to DI-7)**
3. ***SETTINGS → SCHEDULE → SCHEDULE NUM →*** **Always Occupied (0)**
4. ***SETTINGS → NETWORK SETTINGS → ZS SENSOR CFG → ZSM SENSOR CONFIG →*** **REMLOC (1)**

ZS MOTION SENSOR TEMPERATURE OFFSET ONLY SENSOR

ZS motion sensor(s) can be utilized as a temperature offset only sensor. This will allow SystemVu to remain in an "occupied" state and use the ZS motion sensor(s) to offset the occupied setpoints. In this application SystemVu will maintain the space between its "occupied heating" and "occupied cooling" setpoints but apply a demand limit level of one. When the motion sensor is activated SystemVu will remove the demand limit level and the unit and follow the occupied heating and cooling setpoints. The unit's occupancy state does not change during this application, and this control is not functional during the unoccupied mode. The specific amount of setpoint offset can be changed with the demand limit level 1 settings for heating and cooling (***COOL DMD LIM LEV1*** and ***HEAT DMD LIM LEV1***). Demand limit status can be viewed real time in the ***RUN STATUS MODE → DMD LIMIT STATUS*** menu and through the building network.

NOTE: The following steps are menus followed by → **"Settings"** for enabling ZS motion sensor control only.

1. ***SETTINGS → UNIT CONFIGURATION → GENERAL → UNIT CONTROL TYPE →*** **Space Sen (1)**
2. ***SETTINGS → SPACE SETPOINTS → DMD LIMIT CONFIG → COOL DMD LIM LEV1 →*** **(choose desired offset in degrees)**
3. ***SETTINGS → SPACE SETPOINTS → DMD LIMIT CONFIG → HEAT DMD LIM LEV1 →*** **(choose desired offset in degrees)**
4. ***SETTINGS → NETWORK SETTINGS → ZS SENSOR CFG → ZSM SENSOR CONFIG →*** **TEMP ONLY (3)**

NOTE: When using this type of application with the ZS Motion sensors, if a building demand limit is imposed on the control it will override this control. If the building demand limit is activated first, this control will override the building demand level.

ZS MOTION SENSOR TROUBLESHOOTING

1. ZS motion sensor not performing as expected
- Motion sensor blocked
- Motion sensor out of range. May need multiple motion sensors to cover the occupied area
- Improper sensor placement
- Settings Incorrect follow "SystemVu Motion Sensor Setting Guide"
- Occupancy or demand limiting commands from the building control system.

2. ZS senor not communicating to SystemVu
- Network settings are not configured
- ZS sensor not addressed
- ZS sensor wired incorrectly

Carrier Comfort Network (CCN) Interface

The units can be connected to the CCN if desired. The communication bus wiring is a shielded, 3-conductor cable with drain wire and is field supplied and installed. The system elements are connected to the communication bus in a daisy chain arrangement. (See Fig. 32.) The positive pin of each system element communication connector must be wired to the positive pins of the system elements on either side of it. This is also required for the negative and signal ground pins of each system element. Wiring connections for CCN should be made at the CIB. (See Fig. 15 and 16.) Consult the CCN Contractor's Manual for further information.

NOTE: Conductors and drain wire must be 20 AWG (American Wire Gauge) minimum stranded, tinned copper. Individual conductors must be insulated with PVC, PVC/nylon, vinyl, Teflon[1], or polyethylene. An aluminum/polyester 100% foil shield and an outer jacket of PVC, PVC/nylon, chrome vinyl, or Teflon with a minimum operating temperature range of –20°C to 60°C is required. See table below for acceptable wiring.

MANUFACTURER	PART NO.
Alpha	2413 or 5463
Belden	8772
Carol	C2528
West Penn	302

It is important when connecting to a CCN communication bus that a color-coding scheme be used for the entire network to simplify the installation. It is recommended that red be used for the signal positive, black for the signal negative and white for the signal ground. Use a similar scheme for cables containing different colored wires.

1. Third-party trademarks and logos are the property of their respective owners.

At each system element, the shields of its communication bus cables must be tied together. The shield screw on CIB can be used to tie the cables together. If the communication bus is entirely within one building, the resulting continuous shield must be connected to a ground at one point only. The shield screw on CIB is not acceptable for grounding. If the communication bus cable exits from one building and enters another, the shields must be connected to grounds at the lightning suppressor in each building where the cable enters or exits the building (one point per building only).

To connect the unit to the network:

1. Turn off power to the control box.
2. Cut the CCN wire and strip the ends of the red (+), white (ground), and black (–) conductors. (Substitute appropriate colors for different colored cables.)
3. Connect the red wire to (+) terminal on CIB, the white wire to COM terminal, and the black wire to the (–) terminal.
4. The RJ14 CCN connector on CIB can also be used, but is only intended for temporary connection (for example, a laptop computer running Carrier network software).
5. Restore power to unit.

IMPORTANT: A shorted CCN bus cable will prevent some routines from running and may prevent the unit from starting. If abnormal conditions occur, unplug the connector. If conditions return to normal, check the CCN connector and cable. Run new cable if necessary. A short in one section of the bus can cause problems with all system elements on the bus.

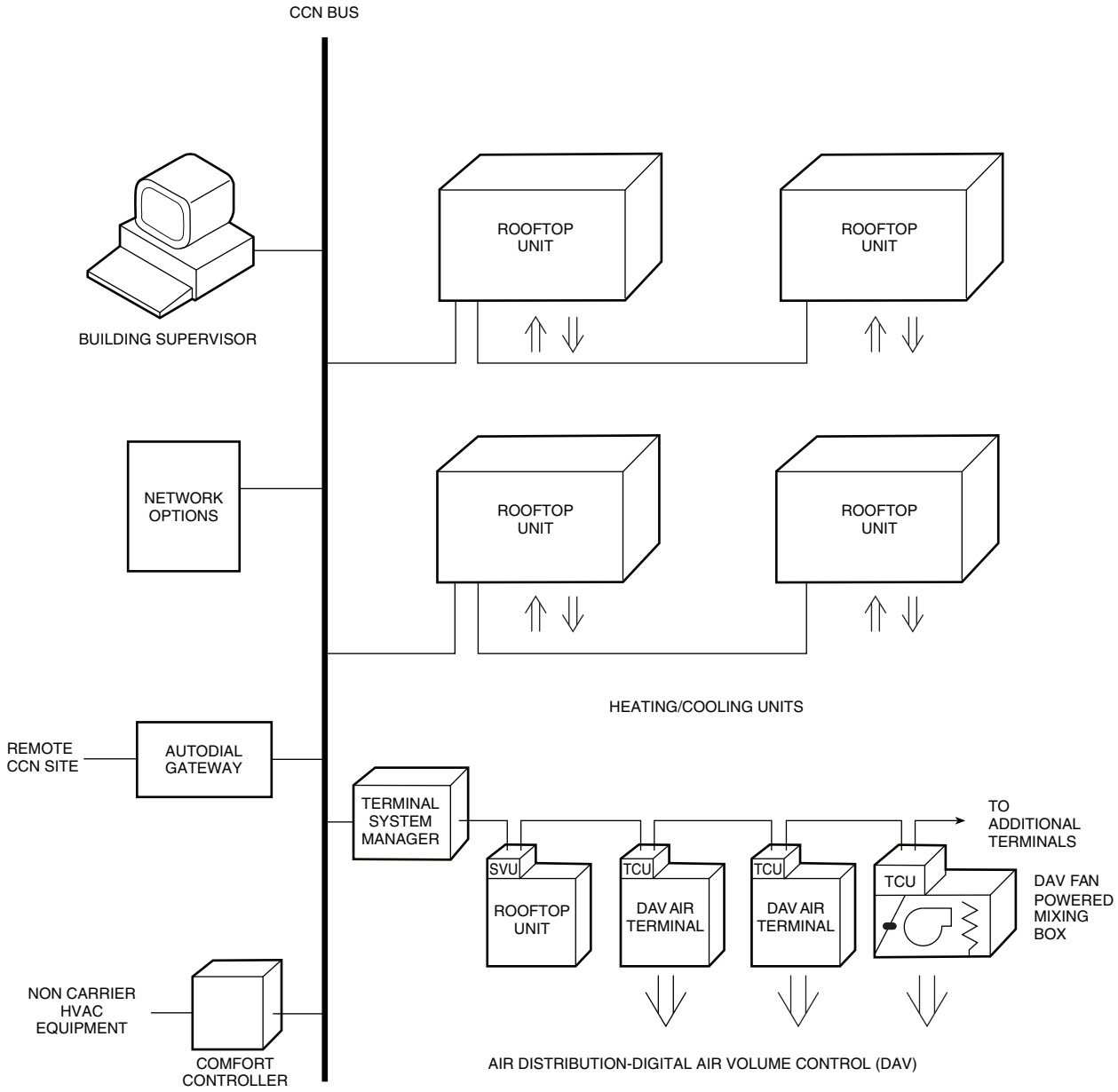

LEGEND

CCN — Carrier Comfort Network®
DAV — Digital Air Volume
HVAC — Heating, Ventilation, and Air Conditioning
SVU — SystemVu™ Controller
TCU — Terminal Control Unit

Fig. 32 — CCN System Architecture

APPENDIX A — SYSTEMVU™ CONTROLLER DISPLAY

Table A — Run Status Main Menu Layout

DISPLAY TEXT	EXPANDED DISPLAY TEXT	VALUES	UNITS	WRITE STATUS	POINT
SHUTDOWN UNIT?	Local Unit Shutdown Req.	Yes/No		Command	LOCSHUT
RUN STATUS	Run Status Menu				
MODE	Mode Status Menu				
MODE	Operating Mode	see Appendix B			MODETEXT
SUB-MODE	Operating Sub-Mode	see Appendix B			SUBMTEXT
DEMAND	System Demand	see Appendix B			SYS_DMDT
LINKAGE ACTIVE	Linkage Active	Yes/No			LNK_ACT
EFF COOL SETPOINT	Cool Setpoint In Effect	xx.x	°F		CSP_EFF
EFF HEAT SETPOINT	Heat Setpoint In Effect	xx.x	°F		HSP_EFF
DEMAND CTRL TEMP	Effective Demand Temp	xxx.x	°F		TEMP_EFF
OCC SPRH SETPOINT	Occupied SPRH Setpoint	xxx.x	%		SPRH_OSP
UNOCC SPRH SP	Unoccupied SPRH Setpoint	xxx.x	%		SPRH_USP
COOL MODE T.GUARD	Cool Mode Select T.guard	xxx	sec		COOLMSTG
HEAT MODE T.GUARD	Heat Mode Select T.guard	xxx	sec		HEATMSTG
COOLING DEMAND	Space Cooling Demand	xx.x	ΔF		COOL_DMD
COOL DEMAND TREND	Cooling Demand Trend	xx.x			CLDTREND
HEATING DEMAND	Heating Space Demand	xx.x	ΔF		HEAT_DMD
HEAT DEMAND TREND	Heat Space Demand Trend	xx.x			HTDTREND
DMD LIMIT STATUS	DEMAND LIMIT STATUS				
COOL DMD LIM OFF	Cool Demand Limiting	Yes/No			CDMLMOFF
HEAT DMD LIM OFF	Heat Demand Limiting	Yes/No			HDMLMOFF
COOL DMD LIM LEV	Cool demand Limit Level	0 to 3			CDMDLLEV
HEAT DMD LIM LEV	Heat demand Limit Level	0 to 3			HDMDLLEV
CL DMD LIM OFFSET	Cool Demand limit offset	xx.x	°F		COOLDLMO
HT DMD LIM OFFSET	Heat Demand limit offset	xx.x	°F		HEATDLMO
COOL	Cooling Status Menu				
COMMANDED IDF RPM	IDF Commanded RPM	0 to 3000	RPM		FSPD_RPM
ACTIVE COOL STAGE	Actual Cool Stage Active	x			ACTCSTGS
ECON CMD POSITION	Econo Commanded Position	0 to 100	%	Forcible	DAMPCMD
MECHANICAL COOLING	Mechanical Cooling Detail Sub-Menu				
COOLING DEMAND	Space Cooling Demand	xx.x	ΔF		COOL_DMD
OK TO MECH COOL	Ok to use compressors?	Yes/No			OKMECHCL
MECH COOL ACTIVE	Mechanical Cool active?	Yes/No			MECHCOOL
MAX COOL STAGES	Max Allowed Cool Stages	0 to 3		Forcible	MAXCSTGS
REQ. COOL STAGES	Requested Cooling Stages	0 to 3			REQCSTGS
ACTIVE COOL STAGE	Actual Cool Stage Active	x			ACTCSTGS
ODF STATE	ODF State	0=OFF, 1=ON, 2=LOW, 3=HIGH			ODFSTATE
COMP A1 TIMEGUARD	Compressor A1 Timeguard	xxx	sec		TIMGD_A1
COMP A2 TIMEGUARD	Compressor A2 Timeguard	xxx	sec		TIMGD_A2
CMP LDR TIMEGUARD	Comp A1 Loader Timeguard	xxx	sec		TIMG_ALD
SUPPLY AIR TREND	Supply Air Temp Trend	xxx.x			SATTREND
COMP A1 STRIKES	Compressor A1 strikes	x			A1STRIKE
COMP A2 STRIKES	Compressor A2 strikes	x			A2STRIKE
RECENT A1 STRIKE	Recent Comp A1 Strike	Yes/No			A1STKACT
RECENT A2 STRIKE	Recent Comp A2 Strike	Yes/No			A2STKACT
HI PRESS OVERRIDE	High Pressure Override	Yes/No			HP_OVR
CIRCUIT A LOCKOUT	Circuit A Locked Out	Yes/No			CIRALOCK
LOW COOL LOCKOUT	Low cooling locked out	Yes/No			LC_LOCK
COMP A1 AVAILABLE	Compressor A1 Available	Yes/No			CA1_AVAL
COMP A2 AVAILABLE	Compressor A2 Available	Yes/No			CA2_AVAL
COMP A1 LOCKOUT	Compressor A1 Locked Out	Yes/No			CA1_LOCK
COMP A2 LOCKOUT	Compressor A2 Locked Out	Yes/No			CA2_LOCK
FREE COOLING	Free Cooling Detail Sub-menu				
OK TO FREE COOL	OK to Use Free Cooling?	Yes/No			OKFREECL
IN FREE COOLING	Free Cooling active	Yes/No			FREECOOL
FREECOOL SAT SP	Free Cooling SAT Setpnt	xx.x	°F		FC_SATSP
REQ. DAMPER POS	Requested Damper Pos	0 to 100	%		REQDAMP
ECON OPERATIONAL?	Econ Damper Operational	Yes/No			DAMPGOOD

Table A — Run Status Main Menu Layout (cont)

DISPLAY TEXT	EXPANDED DISPLAY TEXT	VALUES	UNITS	WRITE STATUS	POINT
DRY BULB LOCKOUT	Dry Bulb Lockout	Yes/No		Forcible	DBLOCK
ENTHALPY LOCKOUT	Enthalpy Lockout	Yes/No		Forcible	ENTHLOCK
OK TO UNOCC FC?	Ok to Unocc Free Cool?	Yes/No			OKTOUFC
IN UNOC FREECOOL?	Unocc Free Cool Active	Yes/No			UFC_ACT
UFC LOCKOUT?	Unocc Free Cool Lockout	Yes/No			UNOCLOCK
DEHUMIDIFICATION	DEHUMIDIFICATION				
OK TO DEHUM	Ok to Dehumidify	Yes/No			OKTODHUM
OK TO USE FBD	Ok to use Fan Dehum	Yes/No			OKTOFBD
FBD SST LOCK OUT	FBDH SST Lockout	Yes/No			FBDSSTLO
FBD SAT LOCK OUT	FBDH SAT Lockout	Yes/No			FBDSATLO
HEAT	Heating Status Menu				
COMMANDED IDF RPM	IDF Commanded RPM	0 to 3000	RPM		FSPD_RPM
ACTV HEAT SOURCE	Active Type of Heat	0=NONE, 1=MECH ONLY, 2=MECH+1EH, 3=MECH+2EH, 4=ELCTHT1, 5=EH1+EH2, 6=DEFROST			HTSRCTYP
ECON CMD POSITION	Econo Commanded Position	0 to 100	%	Forcible	DAMPCMD
HEAT LOCKOUT	All Heat Stages Lockout	Yes/No		Forcible	ALLHTLOC
DEFROST ACTIVE	Defrost Mode Active	Yes/No			DFRSTACT
OK TO USE HEAT	OK to Run Heat	Yes/No			OKTOHEAT
REQ. HEAT STAGES	Requested Heating Stages	x			REQHSTGS
ACTIVE HEAT STAGE	Actual Heat Stage Active	x			ACTHSTGS
MAX HEAT STAGES	Max Allowed Heat Stages	x		Forcible	MAXHSTGS
TIME IN DEFROST	Defrost Mode Timer	xxxx	sec		DF_TIMER
NEXT DEFROST IN	Defrost Interval Timer	xxxx	sec		DFINT_T
OK TO SA TEMPER	OK to SupplyAirTempering	Yes/No			OKTOTEMP
MECHANICAL HEATING	Mechanical Heating Menu				
MECH HEAT ACTIVE	Mechanical Heating	Yes/No			MECHT_EN
ODF STATE	ODF State	0=OFF, 1=ON, 2=LOW, 3=HIGH			ODFSTATE
COMP A1 TIMEGUARD	Compressor A1 Timeguard	xxx	sec		TIMGD_A1
COMP A2 TIMEGUARD	Compressor A2 Timeguard	xxx	sec		TIMGD_A2
CMP LDR TIMEGUARD	Comp A1 Loader Timeguard	xxx	sec		TIMG_ALD
SUPPLY AIR TREND	Supply Air Temp Trend	xxx.x			SATTREND
COMP A1 STRIKES	Compressor A1 strikes	x			A1STRIKE
COMP A2 STRIKES	Compressor A2 strikes	x			A2STRIKE
RECENT A1 STRIKE	Recent Comp A1 Strike	Yes/No			A1STKACT
RECENT A2 STRIKE	Recent Comp A2 Strike	Yes/No			A2STKACT
CIRCUIT A LOCKOUT	Circuit A Locked Out	Yes/No			CIRALOCK
COMP A1 AVAILABLE	Compressor A1 Available	Yes/No			CA1_AVAL
COMP A2 AVAILABLE	Compressor A2 Available	Yes/No			CA2_AVAL
COMP A1 LOCKOUT	Compressor A1 Locked Out	Yes/No			CA1_LOCK
COMP A2 LOCKOUT	Compressor A2 Locked Out	Yes/No			CA2_LOCK
ELECTRIC HEATING	Electric Heating Menu				
HEAT 1 TIMEGUARD	Heat Stage 1 Timeguard	xxx	sec		TIMGD_H1
HEAT 2 TIMEGUARD	Heat Stage 2 Timeguard	xxx	sec		TIMGD_H2
DELAY FOR EHEAT2	Heat2 delay timer	xxx	sec		H2DLTMR
HEAT 1 AVAILABLE	Heat Stage 1 Available	Yes/No			HT1_AVAL
HEAT 2 AVAILABLE	Heat Stage 2 Available	Yes/No			HT2_AVAL
VENTILATION	Ventilation Status Menu				
VENT MODE	Ventilation Status	see Appendix B			VENTTEXT
EFFECTIVE MIN POS	Min Position in Effect	0 to 100	%	Forcible	MIN_POS
ECON ACT POSITION	Damper Actual Position	0 to 100	%		DAMPPOS
COMMANDED IDF RPM	IDF Commanded RPM	0 to 3000	RPM		FSPD_RPM
OCCUPIED NOW	Currently Occupied	Yes/No		Forcible	OCCUPIED
OCCUPIED STAND BY	OccupiedStandBY	Yes/No			OCCSTDBY
IN PREOCC PURGE?	In Pre-Occupancy Purge?	Yes/No			PREOCCON
IN FREE COOLING	Free Cooling active	Yes/No			FREECOOL
DIFF AIR QUALITY	Differential Air Quality	-5000 to 5000	PPM		AQ_DIFF

Table A — Run Status Main Menu Layout (cont)

DISPLAY TEXT	EXPANDED DISPLAY TEXT	VALUES	UNITS	WRITE STATUS	POINT
OK TO PREOC PURGE	Ok to Preoccupancy Purge	Yes/No			OKPREOCC
IN IAQ OVERRIDE	Is IAQ Override Active?	Yes/No			IAQ_OVRD
DCV CURVE OFFSET	IAQ DCV Curve Offset	0 to 100	%		IAQ_OFFS
INDOOR FAN	Indoor Fan Status Menu				
COMMANDED IDF RPM	IDF Commanded RPM	0 to 3000	RPM		FSPD_RPM
IDF SPD OVERRIDE	IDF Speed Override Flag	On/Off			FAN_OVRD
IDF ERROR STATUS	IDF Operation Errors?	Yes/No			IDFBAD
GENERAL	General Run Data Menu				
FILTER TIME LEFT	Filter hour remaining	xxxx	hrs		FILTLEFT
RESET FILTER TIME	Reset Filter Timer	Yes/No		Command	RESETFLT
IN DAYLIGHT SAVE?	DST currently active	Yes/No			DST_ACTV
TCS ACTIVE?	Temp Compensate Start On	Yes/No			TCS_ACT
OCCUPANCY	OCCUPANCY DATA				
OCCUPIED NOW	Currently Occupied	Yes/No		Forcible	OCCUPIED
OCCUPIED STAND BY	OccupiedStandBY	Yes/No			OCCSTDBY
MINS UNTIL OCC	Mins until next occupied	x-1 to 10080	min		MINTILOC
ACTIVE OCC CTRL	Active Occupancy control	0=24/7 OCC, 1=SCHEDULE, 2=BAS CTRL, 3=REMOC CTL, 4=TIME OVRD, 5=LINKAGE, 6=FORCED			OCC_CTRL
LINKAGE OCC REQ	Linkage Occupied Request	0=Unocc, 1=Occupied, 2=Disabled		Forcible	LNK_OCC
TIMED OVRD REMAIN	Timed Override Remaining	0 to 240	min	Forcible	OVR_EXT
REMOTE OCC SWITCH	Remote Occupancy Switch	On/Off		Forcible	REMOCC
BMS OCC REQUEST	BMS Occupancy Request	0=UNOCC, 1=OCCUPIED, 2=DISABLED		Forcible	BMS_OCC
LOCAL OCC REQUEST	Local Sched Occ Request	0=Unocc, 1=Occupied		Forcible	LOC_OCC
ACTIVE PERIOD	Active Schedule period	0 to 8			PER_NO
HOLIDAY TOMORROW?	Tomorrow Is A Holiday	Yes/No			HOL_TMRW
HOLIDAY TODAY?	Today Is A Holiday	Yes/No			HOLTODAY
NEXT OCC DAY	Next Occupied Day	DDD			NXTOCDAY
NEXT OCC TIME	Next Occupied Time	hh:mm	min		NXTOCTIM
NEXT UNOCC DAY	Next Unoccupied Day	DDD			NXTUNDAY
NEXT UNOCC TIME	Next Unoccupied Time	hh:mm	min		NXTUNTIM
PREV UNOCC DAY	Previous Unoccupied Day	DDD			PRVUNDAY
PREV UNOCC TIME	Previous Unoccupied Time	hh:mm	min		PRVUNTIM

Table B — Settings Main Menu Layout

DISPLAY TEXT	EXPANDED DISPLAY TEXT	VALUES	UNITS	DEFAULT	POINT
SETTINGS	SETTINGS MENU				
SPACE SET POINTS	Space Setpoints Adjustment Menu				
OCC COOL SETPOINT	Occupied Cool Setpoint	55 to 80	°F	78	OCSP
OCC HEAT SETPOINT	Occupied Heat Setpoint	55 to 80	°F	68	OHSP
UNOCC COOL SETPNT	Unoccupied Cool Setpoint	65 to 95	°F	85	UCSP
UNOCC HEAT SETPNT	Unoccupied Heat Setpoint	40 to 80	°F	60	UHSP
HEAT-COOL SP GAP	Heat-Cool Setpoint Gap	2 to 10	°F	5	HCSP_GAP
SPT SLIDER RANGE	SPT Offset Range (+/-)	0 to 5	°F	5	SPTO_RNG
OCC SPRH SETPOINT	Occupied SPRH Setpoint	0 to 100	%	50	SPRH_OSP
UNOCC SPRH SET PT	Unoccupied SPRH Setpoint	0 to 100	%	80	SPRH_USP
SPRH RH DEADBAND	Space RH Deadband	2 to 20	%	8	SPRH_DB
SA TEMPERING SP	SA tempering Set point	35 to 80	°F	55	SATEMPSP
TEMP DEMAND CONFIG	Temperature Demand Configuration menu				
LOW COOL DMD ON	Low Cool Demand On	-1 to 2	°F	0.5	DMDLCON
HIGH COOL DMD ON	High Cool Demand On	0.5 to 20	°F	1.5	DMDHCON
LOW COOL DMD OFF	Low Cool Demand Off	-1 to 2	°F	-0.5	DMDLCOFF
COOL DMD LEVEL UP	Cool Demand Level Up	-2 to 2	°F	-0.2	CDMD_LUP

Table B — Settings Main Menu Layout (cont)

DISPLAY TEXT	EXPANDED DISPLAY TEXT	VALUES	UNITS	DEFAULT	POINT
LOW HEAT DMD ON	Low Heat Demand On	-1 to 2	°F	0.5	DMDLHON
HIGH HEAT DMD ON	High Heat Demand On	0.5 to 20	°F	2	DMDHHON
LOW HEAT DMD OFF	Low Heat Demand Off	-1 to 2	°F	-0.5	DMDLHOFF
HEAT DMD LEVEL UP	Heat Demand Level Up	-2 to 2	°F	-0.2	HDMD_LUP
DEMAND TIMEGUARD1	Space Demand Time Guard1	60 to 600	sec	120	TDMD_TG1
DEMAND TIMEGUARD2	Space Demand Time Guard2	0 to 600	sec	240	TDMD_TG2
DEMAND TIMEGUARD3	Space Demand Time Guard3	5 to 120	min	10	TDMD_TG3
DMD LIMIT CONFIG	DEMAND LIMIT CONFIG				
COOL DMD LIM LEV1	COOL DMD Offset level 1	0 to 99	°F	1	CLDOLEV1
COOL DMD LIM LEV2	COOL DMD Offset level 2	0 to 99	°F	3	CLDOLEV2
COOL DMD LIM LEV3	COOL DMD Offset level 3	0 to 99	°F	5	CLDOLEV3
HEAT DMD LIM LEV1	Heat DMD Offset level 1	0 to 99	°F	1	HTDOLEV1
HEAT DMD LIM LEV2	Heat DMD Offset level 2	0 to 99	°F	3	HTDOLEV2
HEAT DMD LIM LEV3	Heat DMD Offset level 3	0 to 99	°F	5	HTDOLEV3
CLOCK	CLOCK ADJUSTMENT MENU				
DATE	Current Date	MM/DD/YYYY			DATE
TIME	Clock Hour and Minute	xx:xx	hh.mm		TIME
DAYLIGHT SAVINGS	Daylight Savings Configuration Menu				
DAYLIGHT SAVINGS?	DST allowed?	Enable/Disable		Enable	DST_CFG
DST START MONTH	DST Start Month	1=JANUARY 2=FEBRUARY 3=MARCH 4=APRIL 5=MAY 6=JUNE 7=JULY 8=AUGUST 9=SEPTEMBER 10=OCTOBER 11=NOVEMBER 12=DECEMBER		3	STARTM
DST START WEEK	DST Start Week	1 to 5		2	STARTW
DST START DAY	DST Start Day	1=MONDAY, 2=TUESDAY, 3=WEDNES-DAY, 4=THURSDAY, 5=FRIDAY, 6=SATURDAY, 7=SUNDAY		7	STARTD
DST MINS TO ADD	DST Minutes to Add	0 to 90	min	60	MINADD
DST STOP MONTH	DST Stop Month	1=JANUARY, 2=FEBRUARY, 3=MARCH, 4=APRIL, 5=MAY, 6=JUNE, 7=JULY, 8=AUGUST, 9=SEPTEM-BER, 10=OCTOBER, 11=NOVEM-BER, 12=DECEM-BER		11	STOPM
DST STOP WEEK	DST Stop Week	1 to 5		1	STOPW
DST STOP DAY	DST Stop Day	1=MONDAY, 2=TUESDAY, 3=WEDNES-DAY, 4=THURSDAY, 5=FRIDAY, 6=SATURDAY, 7=SUNDAY		7	STOPD
DST MINS TO SUB	DST Minutes to Subtract	0 to 90	min	60	MINSUB
START TIME IN DAY	Time in day to start DST	0 to 600	min	120	DST_TOD
SCHEDULES	SCHEDULES ADJUSTMENT MENU				

Table B — Settings Main Menu Layout (cont)

DISPLAY TEXT	EXPANDED DISPLAY TEXT	VALUES	UNITS	DEFAULT	POINT
SCHEDULE NUMBER	CCN Schedule Number	0=Always Occupied, 1-64=Local Schedule, 65-99=Global Schedule		0=Always Occupied	SCHEDNUM
OCCUPANCY SCHEDULE	OCCUPANCY SCHEDULE DATA				
HOLIDAY ADJUSTMENT MENU	Holiday adjustment Menu				
ALLOW G. HOLIDAY?	Accept Global Holidays?	Yes/No		No	HOLIDAYT
TIMED OVR LENGTH	Timed Override Duration	0 to 4	hrs	4	OTL_CFG
CAN CANCEL T.OVR	Allow SPT Ovrd Cancel	Yes/No		No	CLROVCFG
UNIT CONFIGURATIONS	UNIT CONFIGURATIONS MENU				
GENERAL	General Unit Configurations Menu				
STARTUP DELAY	Unit Startup Delay	10 to 600	sec	30	STARTDLY
UNIT CONTROL TYPE	Unit Control Type	0=TSTAT, 1=SPACE SEN, 2=RAT SEN		0=TSTAT	CTRLTYPE
THERMOSTAT TYPE	Thermostat Hardware Type	0=CONV 2C2H, 1=DIGI 2C2H, 2=CONV 3C2H, 3=DIGI 3C2H		0=CONV 2C2H	STATTYPE
VENT METHOD	Ventilation Method	0=NONE, 1=ECON, 2=2POS DMPR, 3=ERV, 4=ECON ERV		0: No FIOP 1: Economizer FIOP 2: Two Position Damper FIOP	VENTTYPE
2POS/ERV CHANNEL	2-Pos Damper/ERV Channel	0=NONE, 1=MBB RLY11, 2=MBB RLY06		0: No FIOP 2: FIOP	EV2PCHAN
ADAPTIVE TSTAT	Tstat Adaptive Staging	Yes/No		Yes	ADPTSTAT
DIRTY FILTER TIME	Change Filter Timer	0 to 9999	hrs	0	FILTLIFE
TEST MODE TIMEOUT	Test inactivity time out	0=Disabled, 1=30 minutes, 2=1 hour, 3=2 hours, 4=4 hours, 5=8 hours, 6=12 hours		4	TEST_ITO
CCH MAX TEMP	CCH Max Temperature	40 to 90	°F	65	CCHMAXT
STD BARO PRESSURE	Std Barometric Pressure	13 to 35	in. Hg	29.92	STD_BARP
LINK STAGEUP TIME	Linkage Stage inc. time	60 to 600	sec	180	LSTAGINC
UNIT'S MAX SAT	Unit's Maximum SAT	130 to 210	°F	200	UMAX_SAT
UNIT'S MIN SAT	Unit's Minimum SAT	30 to 70	°F	32	UMIN_SAT
AUTO SAT FAULTS?	Auto Clr SAT Limit Fault	Yes/No		Yes	SATLACLR
SA FREEZE PROTECT	SAT Freeze Protection	Enable/Disable		Enable	SATFZPRO
ADAPTIVE TCS?	Adaptive Temp Comp Start	Enable/Disable		Disable	TCS_CFG
USER TCS BIASTIME	User TCS Start Bias Time	0 to 180	min	0	TCSUBIAS
SWITCH INPUTS CONFIGS	DI Config Menu				
FIRE SW CHANNEL	Fire Switch Channel	0=None, 1=MBB DI12, 2=MBB DI13, 3=MBB DI14, 4=MBB DI02, 5=MBB DI03, 6=MBB Y3		0: No FIOP 5: FIOP	FIRECHAN
FIRE SHUTDOWN SW	Fire Shutdown Sw Type	0=NORM OPEN, 1=NORM CLSD		0=NORM OPEN	FIRE_CFG
HUMSTAT CHANNEL	Humidistat Status Chan.	0=None, 1=MBB DI12, 2=MBB DI13, 3=MBB DI14, 4=MBB DI02, 5=MBB DI03, 6=MBB Y3		0=None	HUMDCHAN
HUMSTAT SW TYPE	Humidistat Switch Type	0=NORM OPEN, 1=NORM CLSD		0=NORM OPEN	HUMD_CFG

Table B — Settings Main Menu Layout (cont)

DISPLAY TEXT	EXPANDED DISPLAY TEXT	VALUES	UNITS	DEFAULT	POINT
FILTER SW CHANNEL	Filter Status Sw Channel	0=None, 1=MBB DI12, 2=MBB DI13, 3=MBB DI14, 4=MBB DI02, 5=MBB DI03, 6=MBB Y3		0: No FIOP 1: FIOP	FILTCHAN
FILTER SW TYPE	Filter Status Switch Type	0=NORM OPEN, 1=NORM CLSD		0=NORM OPEN	FILT_CFG
REMOTE OCC CHAN	Remote Occupancy Channel	0=None, 1=MBB DI12, 2=MBB DI13, 3=MBB DI14, 4=MBB DI02, 5=MBB DI03, 6=MBB Y3		0=None	RMOCCHAN
REMOTE OCC TYPE	Remote Occupancy Sw Type	0=NORM OPEN, 1=NORM CLSD		0=NORM OPEN	RMOC_CFG
REM.SHUTDOWN CHAN	Remote Shutdown Channel	0=None, 1=MBB DI12, 2=MBB DI13, 3=MBB DI14, 4=MBB DI02, 5=MBB DI03, 6=MBB Y3		0=None	ROFFCHAN
REM.SHUTDOWN SW T	Remote Shutdown SW Type	0=NORM OPEN, 1=NORM CLSD		0=NORM OPEN	ROFF_CFG
REM.SHUTDOWN TYPE	Remote Shutdown ALM Type	0=Normal, 1=Emergency		0=Normal	ROFFTYPE
COFS CHANNEL	COFS Assigned Channel	0=None, 1=MBB DI12, 2=MBB DI13, 3=MBB DI14, 4=MBB DI02, 5=MBB DI03, 6=MBB Y3		0: No FIOP 4: FIOP	COFSCHAN
COFS TYPE	COFS Switch Type	0=NORM OPEN, 1=NORM CLSD		1=NORM CLSD	COFS_CFG
GEN STATUS CHAN	General Status Channel	0=None, 1=MBB DI12, 2=MBB DI13, 3=MBB DI14, 4=MBB DI02, 5=MBB DI03, 6=MBB Y3		0=None	GEN_CHAN
GEN STAT SW TYPE	General Status Sw Type	0=NORM OPEN, 1=NORM CLSD		0=NORM OPEN	GENS_CFG
SHUTDOWN GEN STAT	General Status shutdown?	Yes/No		Yes	GENFATAL
ENTHALPY SW CHAN	Enthalpy Sw Channel	0=None, 1=MBB DI12, 2=MBB DI13, 3=MBB DI14, 4=MBB DI02, 5=MBB DI03, 6=MBB Y3		0=NONE	ENTHCHAN
ENTHALPY SW TYPE	Enthalpy Switch Type	0=NORM OPEN, 1=NORM CLSD		0=NORM OPEN	ENTH_CFG
FAN STAT CHANNEL	Fan Status Channel	0=None, 1=MBB DI12, 2=MBB DI13, 3=MBB DI14, 4=MBB DI02, 5=MBB DI03, 6=MBB Y3		0=NONE	FNSTCHAN
FAN STAT SW CFG	Fan Status SW Type	0=NORM OPEN, 1=NORM CLSD		0=NORM OPEN	FANSTICFG

Table B — Settings Main Menu Layout (cont)

DISPLAY TEXT	EXPANDED DISPLAY TEXT	VALUES	UNITS	DEFAULT	POINT
IAQ OVERIDE SW CH	IAQ Override Sw Channel	0=None, 1=MBB DI12, 2=MBB DI13, 3=MBB DI14, 4=MBB DI02, 5=MBB DI03, 6=MBB Y3		0=NONE	IAQOCHAN
IAQ OVRRD SW TYPE	IAQ Override Switch Type	0=NORM OPEN, 1=NORM CLSD		0=NORM OPEN	IAQOSCFG
PHASE MON CHANNEL	Phase Monitor Channel	0=None, 1=MBB DI12, 2=MBB DI13, 3=MBB DI14, 4=MBB DI02, 5=MBB DI03, 6=MBB Y3		0: No FIOP 3: FIOP	PMR_CHAN
PHASE MON SW TYPE	Phase Monitor SW Type	0=NORM OPEN, 1=NORM CLSD		1=NORM CLSD	PMR_CFG
SMOKE PURGE CHAN	Smoke Purge Sw Channel	0=None, 1=MBB DI12, 2=MBB DI13, 3=MBB DI14, 4=MBB DI02, 5=MBB DI03, 6=MBB Y3		0=NONE	PURGCHAN
SMOKE PURGE TYPE	Smoke Purge Switch Type	0=NORM OPEN, 1=NORM CLSD		0=NORM OPEN	PURG_CFG
SMOKE PRESS CHAN	Smoke Pressure Sw Chan	0=None, 1=MBB DI12, 2=MBB DI13, 3=MBB DI14, 4=MBB DI02, 5=MBB DI03, 6=MBB Y3		0=NONE	PRESCHAN
SMOKE PRESS TYPE	Smoke Pressure Sw Type	0=NORM OPEN, 1=NORM CLSD		0=NORM OPEN	PRES_CFG
SMOKE EVAC CHAN	Smoke Evacuation Sw Chan	0=None, 1=MBB DI12, 2=MBB DI13, 3=MBB DI14, 4=MBB DI02, 5=MBB DI03, 6=MBB Y3		0=NONE	EVACCHAN
SMOKE EVAC TYPE	Smoke Evacuation Sw Type	0=NORM OPEN, 1=NORM CLSD		0=NORM OPEN	EVAC_CFG
ANALOG INPUT CONFIGS	Analog Inputs Configuration Menu				
SPRH SENS CHANNEL	SPRH Assigned Channel	0=None, 1=MBB AI06, 2=MBB AI07, 3=MBB AI08		0=NONE	SPRHCHAN
SPRH RH @ 4MA	SPRH Sensor Value at 4mA	0 to 100	%	0	SPRH_4MA
SPRH RH @ 20MA	SPRH Sensor Value at 20mA	0 to 100	%	100	SPRH20MA
IAQ SENSOR CHAN	IAQ Assigned Channel	0=None, 1=MBB AI06, 2=MBB AI07, 3=MBB AI08		0: No FIOP 2:FIOP	IAQ_CHAN
IAQ PPM @ 4MA	IAQ Sensor Value at 4mA	0 to 5000	PPM	0	IAQ_4MA
IAQ PPM @ 20MA	IAQ Sensor Value at 20mA	0 to 5000	PPM	2000	IAQ_20MA
OAQ SENSOR CHAN	OAQ Assigned Channel	0=None, 1=MBB AI06, 2=MBB AI07, 3=MBB AI08		0=NONE	OAQ_CHAN
OAQ PPM @ 4MA	OAQ Sensor Value at 4mA	0 to 5000	PPM	0	OAQ_4MA
OAQ PPM @ 20MA	OAQ Sensor Value at 20mA	0 to 5000	PPM	2000	OAQ_20MA
OARH SENSOR CHAN	OARH Assigned Channel	0=None, 1=MBB AI06, 2=MBB AI07, 3=MBB AI08		0: No FIOP 3: FIOP	OARHCHAN
OARH RH @ 4MA	OARH Sensor Value at 4mA	0 to 100	%	0	OARH_4MA
OARH RH @ 20MA	OARH Sensor Val. at 20mA	0 to 100	%	100	OARH20MA

Table B — Settings Main Menu Layout (cont)

DISPLAY TEXT	EXPANDED DISPLAY TEXT	VALUES	UNITS	DEFAULT	POINT
RARH SENS CHANNEL	RARH Assigned Channel	0=None, 1=MBB AI06, 2=MBB AI07, 3=MBB AI08		0=NONE	RARHCHAN
RARH RH @ 4MA	RARH Sensor Value at 4mA	0 to 100	%	0	RARH_4MA
RARH RH @ 20MA	RARH Sensor Value at 20mA	0 to 100	%	100	RARH20MA
OACFM SENSOR CHAN	OACFM Assigned Channel	0=None, 1=MBB AI06, 2=MBB AI07, 3=MBB AI08		0=NONE	OCFMCHAN
OACFM @ 4MA	OACFM value at 4mA	0 to 2000	CFM	0	OCFM_4MA
OACFM @ 20MA	OACFM Value at 20mA	2000 to 5000	CFM	2000	OCFM20MA
COOLING	Cooling Configurations Menu				
COOL STAGEUP TIME	Cool Stage Increase Time	120 to 999	sec	450	CSTAGINC
COOL SATTREND LEV	Cooling SAT Trend Level	-1 to 1		-0.2	SAT_TLC
UPPER MIN SAT	Cool Min SAT Upper Level	35.0 to 65.0	°F	56	SATMIN_H
LOWER MIN SAT	Cool Min SAT Lower Level	35.0 to 65.0	°F	46	SATMIN_L
COOL FANOFF DELAY	Cooling Fan-Off Delay	0 to 600	sec	60	COOL_FOD
ODF HIGH SPD TIME	ODF High Speed Time	0 to 300	sec	120	MINODFTM
FAN BASED DEHUM	Fan Based Dehum CFG Menu				
FBD CONTROL TYPE	Fan Based Dehum Type	0=NONE, 1=Comfort, 2=Max		0=NONE	FBD_TYPE
FBD COOL DELTA	FBDH Low Set Point	-20 to 0	ΔF	-2.5	FBDLO_SP
FBD MAX SST SP	FBDH Max Mode SST SP	20 to 60	°F	38	FBDSSTSP
FBD SST MIN VALUE	FBDH Min SST Threshold	10 to 60	°F	32	FBDH_SST
FBD CMFT SAT SP	FBDH Comfort SAT SP	35 to 80	°F	46	FBDH_SAT
FBD CMFT SAT DT	FBD Comfort SAT Delta	0 to 30	°F	11	FBDSATDT
FBD MIN FAN SPD	FBDH Min Fan Speed	0 to 3000	RPM	same as IDF VENT SPD (see Page 79)	FDRPMMIN
FBD MAX FAN SPD	FBDH Max Fan Speed	0 to 3000	RPM	same as IDF HIGH COOL SPD (See page 80)	FDRPMMAX
LOW AMBIENT	LOW AMBIENT CONFIGS MENU				
CIR.A LOCKOUT OAT	Circuit A Lockout Temp	xx.x	°F		OATLCMPA
LOW COOL MIN OAT	Low Cool lockout Temp	-20 to 60	°F	10	LCLOCKSP
LOW AMBIENT TEMP	Low Ambient Temperature	0 to 80	°F	70: 50FEQ 24-28 66: 50FEQ 04-07, 50GEQ 04-06 60: 50FEQ 08-17, 50GEQ07-17 40: 50FEQ14, 50GEQ12	LA_TEMP
LOW AMBIENT TEMP2	Low Ambient Temp2	0 to 80	°F	40	LA_TEMP2
HEATING	Heating Configurations Menu				
TIME BTWN DEFROST	Min Time BTWN Defrosts	30 to 120	min	60	MINDFINT
MAX DEFROST TIME	Defrost Max Duration	5 to 25	min	10	MAXDFTMR
HEAT STAGEUP TIME	Heat Stage Increase Time	120 to 999	sec	450	HSTAGINC
HEAT SATTREND LEV	Heating SAT Trend Level	-1 to 1		0.2	SAT_TLH
LOWER MAX SAT	Heat Max SAT Lower Level	85 to 200	°F	140: all except below 105: Sizes 17-28	SATMAX_L
UPPER MAX SAT	Heat Max SAT Upper Level	85 to 200	°F	170: All except below 115: sizes 17-28	SATMAX_H
HEAT FANOFF DELAY	Heating Fan-Off Delay	10 to 600	sec	60	HEAT_FOD
HEAT LOCKOUT OAT	Heating Lockout Temp	40 to 125	°F	75	OATLHEAT
MEC HEATLOCK TEMP	Mech Heat Lockout Temp	-30 to 40	°F	-8	OATLMECH
LLSV ON TIME	LiquidLine Valve On Time	0 to 300	sec	60	LLSV_CT
SAT DURING HEAT?	SAT heat mode sensing	Enable/Disable		Enable	SAT_HEAT
SA TEMPER ENABLED	Supply Air Temper Enable	Yes/No		No	SATEMPEN
SA TEMPERING SP	SA tempering Set point	35 to 80	°F	55	SATEMPSP
TEMPER MAX OAT	Max OAT for SA tempering	40 to 80	°F	65	OATSTEMP
START DEFROST DLY	Startup Defrost Delay	0 to 120	min	5	DFHLD_T
ELECTRIC HEAT	Electric Heat Setting Menu				
HEATING STAGE QTY	Number Of Heating Stages	0 to 3		1	NUMHSTGS
MAX OAT FOR 3STGS	Max OAT for 3 Heat Stags	0 to 90	°F	20	HT2LCTMP
HEAT MIN ON	Heat Minimum On Time	60 to 600	sec	120	H_MINON
HEAT MIN OFF	Heat Minimum Off Time	60 to 600	sec	120	H_MINOFF
PREHEAT W/O IDF?	Pre-Heat HX without IDF?	Enable/Disable		Disable	PREHT_HX
PREHEAT FAN DELAY	Pre-Heat Fan On Delay	0 to 120	sec	30	PREHT_TM

Table B — Settings Main Menu Layout (cont)

DISPLAY TEXT	EXPANDED DISPLAY TEXT	VALUES	UNITS	DEFAULT	POINT
COMPRESSOR DIAG	COMPRESSOR DIAGNOSTIC MENU				
COMP MIN ON TIME	Compressor Min On Time	180 to 600	sec	300	C_MINON
COMP MIN OFF TIME	Compressor Min Off Time	120 to 600	sec	180	C_MINOFF
STRIKE CLEAR TIME	Runtime to Reset Strikes	120 to 999	sec	300	MIN_ON_S
CHARGE DIAGNOSTICS	Refrigerant Charge Diagnostic Config Menu				
LOW CHARGE LEVEL	Low Refrig Charge Level	0 to 150	PSI	50	LOCHARGE
NO LOW CHARGE OAT	Low Charge Disable Temp	-40 to 50	°F	10	LOCH_LOT
CIR.A SDP LIMIT	CirA High Pressure Limit	400 to 700	PSI	670: 50FEQ04-07, 50GEQ04-06 600: 50FEQ08-30, 50GEQ07-28	HIPLIM_A
LOW DISCHARGE LEV	Low Discharge Level	0 to 20	°F	0	SDTLEV
LOW DISCHRGE DIAG	Low Discharge Diagnostic	Enable/Disable		Disable	DISLDPAL
MIN PRESS RATIO	Minimum Pressure Ratio	0 to 5		1.35	MINPSI_R
LOW SUCTION DIAG.	Low Suction Diagnostic Config Menu				
LOW SUC OK TEMP	Suction OK Temperature	10 to 50	°F	18	SSTOK
LOW SUC LEVEL 1	Low Suction Level 1 Temp	10 to 50	°F	20	SSTLEV1
LOW SUC LEVEL 2	Low Suction Level 2 Temp	5 to 50	°F	15	SSTLEV2
LOW SUC LEVEL 3	Low Suction Level 3 Temp	0 to 50	°F	10	SSTLEV3
LO SUC DIAG DELAY	Delay On Low SST Check	0 to 300	sec	0	SSTCKDLY
HEAT LO SUC OFFST	Heat Low Suc Lvl Offset	0 to 100	°F	30	SSTOFSET
COMPRESSOR TRANSISTION	Compressor Transition diagnostic config menu				
COMP L2 DIAG DLY	Comp Level 2 Diag Delay	1 to 99	sec	15	CDDTLEV2
CIR STUCK ON DIAG	Circuit Stuck On Diag.	Enable/Disable		Enable	DCKTOFF
CIR.A MIN DIS.P	Min discharge change	0 to 99	PSI	8	MDP_DISA
CIR.A MIN SUC.P	Min Suction change	0 to 99	PSI	10	MDP_SUCA
OFF P.RATIO	CirA P.Ratio off change	-1 to 1		-0.3	OFFPR_A
DEFROST UEOFF DLY	Comp UEOFF Diag Delay	0 to 300	sec	30	ACAOFF_T
INDOOR FAN	Indoor Fan Configurations Menu				
OCCUPIED FAN?	Fan On When Occupied	Yes/No		Yes	FANON_OC
IDF MAX SPEED	IDF Maximum Fan Speed	0 to 100	%	100	SPEEDMAX
IDF VENT SPD	IDF Vent Speed-RPM	0 to 3000	RPM	1281: Size 04 Medium Static Fan 1457: Size 04 High Static Fan 1269: Size 05 Medium Static Fan 1439: Size 05 High Static Fan 230v 1 ph 1556: Size 05 High Static Fan 230v 3ph, 460v, 575v 1398: Size 06 Medium Static Fan 1556: Size 06 High Static Fan 230v 1 ph 1659: Size 06 High Static Fan 230v 3ph, 460v, 575v 1302: FEQ07 Medium Static Fan 1460: FEQ 07 High Static Fan 780: FEQ 08-12 Std/Med Static Fan 858: FEQ 08-12 High Static Fan 936: Size 17-24 Std/Med Static Fan 1030: Size 17-24 High Static Fan 858: FEQ 14 1030: FEQ 28 936: GEQ 07-12 Std/Med Static 1030: GEQ 07-12 High Static	RPM_VENT
IDF HEAT SPD	IDF Heat Speed-RPM	0 to 3000	RPM	same as IDF HIGH COOL SPD (See page 80)	RPM_HEAT

Table B — Settings Main Menu Layout (cont)

DISPLAY TEXT	EXPANDED DISPLAY TEXT	VALUES	UNITS	DEFAULT	POINT
IDF HIGH COOL SPD	IDF High Cool Speed-RPM	0 to 3000	RPM	1708: Size 04 Medium Static Fan 1942: Size 04 High Static Fan 1693: Size 05 Medium Static Fan 1919: Size 05 High Static Fan 230v 1 ph 2075: Size 05 High Static Fan 230v 3ph, 460v, 575v 1864: Size 06 Medium Static Fan 2075: Size 06 High Static Fan 230v 1 ph 2212: Size 06 High Static Fan 230v 3ph, 460v, 575v 1973: FEQ07 Medium Static Fan 2212: Size 07 High Static Fan 1560: Size 08-12, 17-24 Std/Med Static Fan 1716: Size 08-12, 17-24 High Static Fan, 1716: Size 14 and 28 1560: GEQ 07-12 Std/Med Static 1716: GEQ 07-12 High Static	RPM_HCL
IDF FREE COOL SPD	IDF Free Cool Speed-RPM	0 to 3000	RPM	same as IDF VENT SPD (see Page 79)	RPM_FCL
FAULT ON ERROR	Shut Down on IDF Failure	Yes/No		Yes	FATALFAN
ECONOMIZER	Economizer Configurations Menu				
VENT METHOD	Ventilation Method	0=NONE, 1=ECON, 2=2POS DMPR, 3=ERV, 4=ECON ERV		0: No FIOP 1: Economizer FIOP 2: Two Position Damper FIOP	VENTTYPE
ECON MAX POS	Econ Max Damper Position	0 to 100	%	100	DAMPMAX
ECON TRAVEL TIME	Economizer Travel Time	5 to 300	sec	150	ECONOTRV
MINIMUM POSITION CONFIGS	Minimum Position Configurations menu				
MIN POS @ MAX FAN	Econ Min at Max Fanspeed	0 to 100	%	30	MINP_MAX
MIN POS SPEED 1	Min Pos - User Speed 1	0 to 100	%	0	MP_USPD1
MIN POS DAMP 1	Min Pos - User Pos 1	0 to 100	%	0	MP_UPOS1
MIN POS SPEED 2	Min Pos - User Speed 2	0 to 100	%	0	MP_USPD2
MIN POS DAMP 2	Min Pos - User Pos 2	0 to 100	%	0	MP_UPOS2
MIN POS SPEED 3	Min Pos - User Speed 3	0 to 100	%	0	MP_USPD3
MIN POS DAMP 3	Min Pos - User Pos 3	0 to 100	%	0	MP_UPOS3
FREE COOL CONFIGS	Free Cooling Specific Configurations Menu				
LOW COOL SAT SP	LowFree Cool SAT Setpnt	40 to 80	°F	65	LCSASP
HIGH COOL SAT SP	High FreeCool SAT Setpnt	40 to 80	°F	55	HCSASP
FREE COOL MAX OAT	Free Cooling Max OAT	0 to 90	°F	65	MAXFREET
FREE COOL MIN OAT	Free Cooling Min Temp	-30 to 70	°F	0	MINFREET
DIFF DRY BULB CTL	Diff. Dry Bulb Control	Enable/Disable		Disable	DIFFBULB
DIFF DB DEADBAND	Diff. Dry Bulb Deadband	0 to 20	°F	3	OATRATDB
ENTHALPY HI LIMIT	Max Enthalpy OA limit	1 to 99	BTU/LB	28	FREEMAXE
DIFF ENTHALPY CTL	Diff. Enthalpy Control	Enable/Disable		Disable	DIFFENTH
ENTHALPY DEADBAND	Enthalpy Cross Deadband	0 to 20	BTU/LB	2	OAERAEDB
UNOCCUPIED FREE COOL	Unoccupied Free Cooling Configs Menu				
WHEN TO UNOCC FC	When to Unocc Free Cool?	0=Disabled, 1=PreOcc, 2=Unocc		1=PreOcc	UFC_CFG
UFC PREOCC TIME	UFC PreOcc Time	1 to 999	min	120	UFCTIME
UFC LOW TEMP	Unocc Free Cool Low Temp	-30 to 70	°F	50	OATLUFC
POWER EXHAUST CONFIGS	Power Exhaust Configurations Menu				
PE1 RELAY CHANNEL	PE1 Relay Channel	0=NONE, 1=MBB RLY11, 2=MBB RLY06		0: no FIOP 2: FIOP	PE1_CHAN
PE1 POS @ MAX SPD	PE Stage 1 at Max speed	0 to 100	%	40	PE1_PMAX
PE OFF DEADBAND	PE Turn Off Dead band	0 to 100	%	5	PE_OFFDB
PE2 RELAY CHANNEL	PE2 Relay Channel	0=NONE, 1=MBB RLY11, 2=MBB RLY06		0=NONE	PE2_CHAN
PE2 POS @ MAX SPD	PE Stage 2 at Max Speed	0 to 100	%	75	PE2_PMAX

Table B — Settings Main Menu Layout (cont)

DISPLAY TEXT	EXPANDED DISPLAY TEXT	VALUES	UNITS	DEFAULT	POINT
ECON ACT MECH DISC DIAG	Econ Actuator Mechanical disconnect diagnostic menu				
MDD-H/C END DLY	T24 Heat/Cool End Delay	0 to 60	min	25	T24CHDLY
MDD-MIN MOVE	T24Econ Min Move for SAT	10 to 20	%	10	T24ECSTS
MDD-SAT DB	Damper SAT deadband	0 to 20	°F	12	T24SATDB
MDD-MIN RAT-OAT	T24 Min Diff in RAT-OAT	5 to 20	°F	15	T24RATDF
MDD-MIN TEST POS	T24 Test Minimum Pos	0 to 100	%	15	T24TSTMN
MDD-MAX TEST POS	T24 Test Maximum Pos	0 to 100	%	85	T24TSTMX
AIR QUALITY	Air Quality Configurations Menu				
ANALOG IAQ CTRL	Analog Input IAQ Control	0=NO IAQ, 1=DCV, 2=IAQ OVRD, 3=CTRL MINP		0: no FIOP 1: FIOP	IAQANCFG
IAQ POS @ MAX SPD	IAQ Position at Max Fan	0 to 100	%	10	IAQMINP
LOW AIR.Q DIFF	AQ Differential Low	0 to 5000		100	DAQ_LOW
HGH AIR.Q DIFF	AQ Differential High	0 to 5000		700	DAQ_HIGH
PREOCC PURGE ENBL	IAQ Preoccupancy Purge	Yes/No		Yes	IAQPURGE
PURGE POS @ MAX	IAQ Purge Pos at Max IDF	0 to 100	%	40	IAQPMAX
PREOCC LOW LIMIT	Preocc Purge Lockout OAT	0 to 70	°F	50	IAQP_LA
PREOCC PURGE TIME	Preocc Purge Duration	5 to 120	min	15	IAQPTIME
AQ DIF HI-IAQ OVR	AQ Diff High IAQOVERRIDE	0 to 5000	PPM	700	AQD_HIGH
AQ DIF LO-IAQ OVR	AQ Diff Low-IAQ OVERRIDE	0 to 5000	PPM	100	AQD_LOW
IAQ OVRRD ENABLE	IAQ override enable	Yes/No		No	IAQOVREN
SW IAQ FAN CTRL	Switch Input IAQ Fan ctl	0=Never, 1=Occupied, 2=Always		0=Never	IAQSWFAN
AI IAQ FAN CTRL	Analog Input IAQ Fan ctl	0=Never, 1=Occupied, 2=Always		0=Never	IAQANFAN
AQ OVR POSITION	IAQ Override Position	0 to 100	%	100	IAQOVPOS
ALARM RELAY	Alarm Relay Configurations Menu				
ALM RELAY CHANNEL	ALM Relay Assigned Chan	0=NONE, 1=MBB RLY11, 2=MBB RLY06		1=MBB RLY11	ALM_CHAN
THERMOSTAT ALERTS	Thermostat Alerts	Yes/No		Yes	TSTAT_AL
HARDWARE ALERTS	Hardware Failures Alerts	Yes/No		Yes	HW_AL
SAT/RAT ALERTS	SAT/RAT Sensor Alerts	Yes/No		Yes	SATRATAL
OAT SENSOR ALERTS	OAT Thermistor Alerts	Yes/No		Yes	OATRL_AL
SPACE SENS ALERTS	Space Sensors Alerts	Yes/No		Yes	SPACE_AL
TRANSDUCER ALERTS	Transducer Sensor Alerts	Yes/No		Yes	TRANS_AL
RH SENSOR ALERTS	RH sensor failure Alert	Yes/No		Yes	RHS_AL
CO2 SENSOR ALERTS	Air Quality CO2 Alerts	Yes/No		Yes	CO2S_AL
OACFM SENS ALERTS	OACFM Alarm Relay	Yes/No		No	OACFM_AL
ECONOMIZER ALERTS	Economizer Alerts	Yes/No		Yes	ECON_AL
AIR FILTER ALERTS	Dirty Filter Alerts	Yes/No		Yes	FILT_AL
GEN STATUS ALERTS	General Status Alerts	Yes/No		Yes	GENS_AL
REFRIG CIR ALERTS	Refrig Circuit Alerts	Yes/No		Yes	CKT_AL
COMPRESSOR ALERTS	Compressor Alerts	Yes/No		Yes	COMP_AL
HEATING ALERTS	Heating Failure Alerts	Yes/No		Yes	HEAT_AL
INDOOR FAN ALERTS	Indoor Fan Alerts	Yes/No		Yes	FAN_AL
ON ACTIVE FAULTS	Relay On Active Faults	Yes/No		Yes	FAULT_AL
SERVICE CONFIG MENU	Service Configuration Menu				
UNIT SIZE	Unit Model Number Size	0 to 255		Match Model Size: 04, 05, 06, 07, 08, 09, 12, 14, 17, 24, 28	UNITSIZE
LOW COOL OFFSET	LOW COOL OFFSET	0 to 100	%	100: FEQ sizes 04-06 75: GEQ sizes 04-06 66: FEQ size 07, GEQ size 12 60: FEQ sizes 17-28 50: FEQ sizes 08-14, GEQ sizes 07-09	LCLOFSET
IFM2 OFFSET	INDOOR MOTOR2 OFFSET	0 to 100	%	15	IFM2OFST
IFM2 OFST ENABLE	INDOOR MOTOR2 OFFSET EN	Enable/Disable		Disable: all except below Enable: Horizontal sizes 17-28	IFM2OFEN
CMP FRAMEWORK	Compressor Framework	0=1CIR 2CMP, 1=1CMP+LDR, 2=1CMP		0: Sizes 08-28, GEQ 07 1: GEQ 04-06 2: 50FEQ 04-06	SYSVTYPE

Table B — Settings Main Menu Layout (cont)

DISPLAY TEXT	EXPANDED DISPLAY TEXT	VALUES	UNITS	DEFAULT	POINT
SHUTDWN A1 FIRST	Comp A1 Shutdown First	Yes/No		No	SDWN_A1
SHUTDWN A2 FIRST	Comp A2 Shutdown First	Yes/No		Yes	SDWN_A2
SHUTDWN ALD FIRST	Comp Loader Shutdown 1st	Yes/No		Yes: All except below No: 50FEQ 04-06	SDWN_ALD
IDF CURVE LO RPM	IDF Curve Low End RPM	0 to 3000	RPM	219: Size 04 Medium Static Fan 249: Size 04 High Static Fan 217: Size 05 Medium Static Fan 246: Size 05 High Static Fan 230v 1 ph 266: Size 05 High Static Fan 230v 3ph, 460v, 575v 239: Size 06 Medium Static Fan 266: Size 06 High Static Fan 230v 1 ph 284: Size 06 High Static Fan 230v 3ph, 460v, 575v 253: Size 07 Medium Static Fan 284: Size 07 High Static Fan 250: Size 08-28 and GEQ 07	IFMLORPM
IDF CURVE HI RPM	IDF Curve High End RPM	0 to 3000	RPM	2190: Size 04 Medium Static Fan 2490: Size 04 High Static Fan 2170: Size 05 Medium Static Fan 2460: Size 05 High Static Fan 230v 1 ph 2660: Size 05 High Static Fan 230v 3ph, 460v, 575v 2390: Size 06 Medium Static Fan 2660: Size 06 High Static Fan 230v 1 ph 2836: Size 06 High Static Fan 230v 3ph, 460v, 575v 2530: Size 07 Medium Static Fan 2836: Size 07 High Static Fan 2000: Size 08-12 and 17-24 Std/Med Static Fan 2200: Size 08-12 and 17-24 Std/Med Static Fan 2200: Size 14 and 28 2000: GEQ 07-12 Std/Med Static 2200: GEQ 07-12 High Static	IFMHIRPM
CCH RELAY1 ENABLE	CCH Relay 1 Enabled	Yes/No		Yes	CCHR1_EN
ECONO PID - KP	ECONO PID - KP	0.00 to 99.90		2.5	ECONO_P
ECONO PID - KI	ECONO PID - KI	0.00 to 99.90		0.12	ECONO_I
ECONO PID - KD	ECONO PID - KD	0.00 to 99.90		1	ECONO_D
ECONO PID - RATE	ECONO PID - RATE	10 to 180	sec	15	ECONO_DT
FBD PID - KP	FBD PID - Kp	0 to 99.99		0.01	FBDPID_P
FBD PID - KI	FBD PID Ki	0 to 99.999		0	FBDPID_I
FBD PID - KD	FBD PID Kd	0 to 99.999		0	FBDPID_D
FBD KI RES VAL	FBD Ki Reset Val.	0.00 to 99.90		0	FBDKIRES
ODF CONTROL SCHEME	ODF Control Scheme	0=NO_CTL 1=1RLY_ECM 2=1RLY_STGC 3=2RLY_OAT 4=3RLY_OAT 5=3RLY_ECM		0: FEQ sizes 04-07 1: None 2: GEQ04-06 3: FEQ sizes 08-28, GEQ sizes 07,08,12 4: None 5: FEQ12, GEQ09	ODF_CTL
NEW HARDWARE	Quick Menu for New Hardware				
UNIT CONTROL TYPE	Unit Control Type	0=TSTAT, 1=SPACE SEN, 2=RAT SEN		0=TSTAT	CTRLTYPE
VENT METHOD	Ventilation Method	0=NONE, 1=ECON, 2=2POS DMPR, 3=ERV, 4=ECON ERV		0: No FIOP 1: Economizer FIOP 2: Two Position Damper FIOP	VENTTYPE

Table B — Settings Main Menu Layout (cont)

DISPLAY TEXT	EXPANDED DISPLAY TEXT	VALUES	UNITS	DEFAULT	POINT
SPRH SENS CHANNEL	SPRH Assigned Channel	0=None, 1=MBB AI06, 2=MBB AI07, 3=MBB AI08		0=NONE	SPRHCHAN
IAQ SENSOR CHAN	IAQ Assigned Channel	0=None, 1=MBB AI06, 2=MBB AI07, 3=MBB AI08		0: no FIOP 2: FIOP	IAQ_CHAN
OAQ SENSOR CHAN	OAQ Assigned Channel	0=None, 1=MBB AI06, 2=MBB AI07, 3=MBB AI08		0=NONE	OAQ_CHAN
OARH SENSOR CHAN	OARH Assigned Channel	0=None, 1=MBB AI06, 2=MBB AI07, 3=MBB AI08		0: no FIOP 3: FIOP	OARHCHAN
RARH SENS CHANNEL	RARH Assigned Channel	0=None, 1=MBB AI06, 2=MBB AI07, 3=MBB AI08		0=NONE	RARHCHAN
OACFM SENS CHANNEL	OACFM Assigned Channel	0=None, 1=MBB AI06, 2=MBB AI07, 3=MBB AI08, 4=SIOB AI10		0=NONE	OCFMCHAN
FIRE SW CHANNEL	Fire Switch Channel	0=None, 1=MBB DI12, 2=MBB DI13, 3=MBB DI14, 4=MBB DI02, 5=MBB DI03, 6=MBB Y3		0: No FIOP 5: FIOP	FIRECHAN
HUMSTAT CHANNEL	Humidistat Status Chan.	0=None, 1=MBB DI12, 2=MBB DI13, 3=MBB DI14, 4=MBB DI02, 5=MBB DI03, 6=MBB Y3		0=NONE	HUMDCHAN
FILTER SW CHANNEL	Filter Status Sw Channel	0=None, 1=MBB DI12, 2=MBB DI13, 3=MBB DI14, 4=MBB DI02, 5=MBB DI03, 6=MBB Y3		0: No FIOP 1: FIOP	FILTCHAN
REMOTE OCC CHAN	Remote Occupancy Channel	0=None, 1=MBB DI12, 2=MBB DI13, 3=MBB DI14, 4=MBB DI02, 5=MBB DI03, 6=MBB Y3		0=NONE	RMOCCHAN
REM.SHUTDOWN CHAN	Remote Shutdown Channel	0=None, 1=MBB DI12, 2=MBB DI13, 3=MBB DI14, 4=MBB DI02, 5=MBB DI03, 6=MBB Y3		0=NONE	ROFFCHAN
COFS CHANNEL	COFS Assigned Channel	0=None, 1=MBB DI12, 2=MBB DI13, 3=MBB DI14, 4=MBB DI02, 5=MBB DI03, 6=MBB Y3		0: No FIOP 4: FIOP	COFSCHAN
GEN STATUS CHAN	General Status Channel	0=None, 1=MBB DI12, 2=MBB DI13, 3=MBB DI14, 4=MBB DI02, 5=MBB DI03, 6=MBB Y3		0=NONE	GEN_CHAN

Table B — Settings Main Menu Layout (cont)

DISPLAY TEXT	EXPANDED DISPLAY TEXT	VALUES	UNITS	DEFAULT	POINT
ENTHALPY SW CHAN	Enthalpy Sw Channel	0=None, 1=MBB DI12, 2=MBB DI13, 3=MBB DI14, 4=MBB DI02, 5=MBB DI03, 6=MBB Y3		0=NONE	ENTHCHAN
FAN STAT CHANNEL	Fan Status Channel	0=None, 1=MBB DI12, 2=MBB DI13, 3=MBB DI14, 4=MBB DI02, 5=MBB DI03, 6=MBB Y3		0=NONE	FNSTCHAN
IAQ OVERIDE SW CH	IAQ override sw channel	0=None, 1=MBB DI12, 2=MBB DI13, 3=MBB DI14, 4=MBB DI02, 5=MBB DI03, 6=MBB Y3		0=NONE	IAQOCHAN
PHASE MON CHANNEL	Phase Monitor Channel	0=None, 1=MBB DI12, 2=MBB DI13, 3=MBB DI14, 4=MBB DI02, 5=MBB DI03, 6=MBB Y3		0: No FIOP 3: FIOP	PMR_CHAN
SMOKE PURGE CHAN	Smoke Purge Sw Channel	0=None, 1=MBB DI12, 2=MBB DI13, 3=MBB DI14, 4=MBB DI02, 5=MBB DI03, 6=MBB Y3		0=NONE	PURGCHAN
SMOKE PRESS CHAN	Smoke Pressure Sw Chan	0=None, 1=MBB DI12, 2=MBB DI13, 3=MBB DI14, 4=MBB DI02, 5=MBB DI03, 6=MBB Y3		0=NONE	PRESCHAN
SMOKE EVAC CHAN	Smoke Evacuation Sw Chan	0=None, 1=MBB DI12, 2=MBB DI13, 3=MBB DI14, 4=MBB DI02, 5=MBB DI03, 6=MBB Y3		0=NONE	EVACCHAN
NETWORK SETTINGS	Building Network Configurations Menu				
BAS PROTOCOL	BAS Protocol Select	0=NONE, 1=CCN, 2=BACNET		0=NONE	BMS_CFG
NETWORK TIMEOUT	Network Input Timeout	0 to 600	min	30	NETINTO
CCN	CCN Network Configuration Menu				
BUS NUMBER	CCN Bus Number	0 to 239		0	CCNBUS
CCN ELEMENT #	CCN Element Number	1 to 239		1	CCNADD
CCN BAUDRATE	CCN Baud Rate	0=9600, 1=19200, 2=38400		2=38400	BAUDENUM
BROADCAST ACK?	CCN Broadcast Ack'er	Yes/No		No	CCNBCACK
BROADCAST SCHEDL?	Global Schedule Broadcst	Yes/No		No	CCN_GSBC
BROADCAST TIME?	CCN Time Broadcast	Yes/No		No	CCNBC
BROADCAST OAT?	Broadcast OAT On Network	Yes/No		No	OATBC
BROADCAST OARH?	Broadcast OARH On Netwrk	Yes/No		No	OARHBC
BROADCAST OAQ?	Broadcast OAQ On Network	Yes/No		No	OAQBC
BROADCAST IAQ?	Broadcast IAQ On Network	Yes/No		No	IAQBC
ALLOW G. OVERRIDE	Allow Global Overrides	Yes/No		Yes	GLBLOVER
LOCATION	Device Location	text			DEV_LOC
REFERENCE NUMBER	Reference number	text			REF_NUM
BACNET	BACnet network configuration menu				
MAC ADDRESS	BACnet Device Macaddress	1 to 127		01	BAC_MAC

Table B — Settings Main Menu Layout (cont)

DISPLAY TEXT	EXPANDED DISPLAY TEXT	VALUES	UNITS	DEFAULT	POINT
BACNET BAUDRATE	BACnet BMS baud rate	0=9600, 1=19200, 2=38400, 3=57600, 4=76800, 5=115200		4=76800	BAC_BAUD
AUTO ID SCHEME	ALC Auto Id Scheme	Yes/No		Yes	AUID
BACNET AUTO ID	BACnet ID Auto ID	Yes/No		Yes	BAC_AUID
BACNET ID	BACnet ID Number	0 to 4194302		1610101	BAC_ID
LOCAL_SHEDL_EDIT	Allow Local Sched Edit	Yes/No		No	LCL_EDIT
LINKAGE SETTINGS	LINKAGE SETTINGS MENU				
DEVICE IAQ	BACnet device for IAQ	0 to 4194303		1610100	DEVIAQ
OBJECT ID IAQ	Object instance for IAQ	0 to 9999		1009	OBJIAQ
COV IAQ	Change of value for IAQ	0 to 60		0	COVIAQ
DEVICE OAQ	BACnet device for OAQ	0 to 4194303		1610100	DEVOAQ
OBJECT ID OAQ	Object instance for OAQ	0 to 9999		1012	OBJOAQ
COV OAQ	Change of value for OAQ	0 to 60		0	COVOAQ
DEVICE OARH	BACnet device for OARH	0 to 4194303		1610100	DEVOARH
OBJECT ID OARH	Object instance for OARH	0 to 9999		1022	OBJOARH
COV OARH	Change of value for OARH	0 to 60		0	COVOARH
DEVICE OAT	BACnet device for OAT	0 to 4194303		1610100	DEVOAT
OBJECT ID OAT	Object instance for OAT	0 to 9999		1003	OBJOAT
COV OAT	Change of value for OAT	0 to 60		0	COVOAT
DEVICE RARH	BACnet device for RARH	0 to 4194303		1610100	DEVRARH
OBJECT ID RARH	Object instance for RARH	0 to 9999		30	OBJRARH
COV RARH	Change of value for RARH	0 to 60		0	COVRARH
DEVICE RAT	BACnet device for RAT	0 to 4194303		1610100	DEVRAT
OBJECT ID RAT	Object instance for RAT	0 to 9999		1010	OBJRAT
COV RAT	Change of value for RAT	0 to 60		0	COVRAT
DEVICE SPT	BACnet device for SPT	0 to 4194303		1610100	DEVSPT
OBJECT ID SPT	Object instance for SPT	0 to 9999		2007	OBJSPT
COV SPT	Change of value for SPT	0 to 60		0	COVSPT
SYSTEM TOUCH	System Touch Menu				
DEVICE INSTANCE	System Touch Device Inst	0 to 4194303		160099	DEVST
POLLING RATE	System Touch Poll Rate	0 to 60		0	POLLST
SPACE TEMP AI	System Touch AI for SPT	0 to 9999		1	AISTSPT
SPACE RH AI	System Touch AI for SPRH	0 to 9999		4	AISTSPRH
ZS SENSOR CFG	ZS Sensor Configuration				
ZS1 ADDRESS	Zone Sensor 1 Address	0 to 255		255	ZSADDR1
ZS2 ADDRESS	Zone Sensor 2 Address	0 to 255		255	ZSADDR2
ZS3 ADDRESS	Zone sensor 3 address	0 to 255		255	ZSADDR3
ZS4 ADDRESS	Zone sensor 4 address	0 to 255		255	ZSADDR4
ZS5 ADDRESS	Zone sensor 5 address	0 to 255		255	ZSADDR5
ZSM SENSOR CFG	ZS motion sensor cfg	0=NONE, 1=REMLOC, 2=LOCOC 3=TEMP_ONLY		1=REMLOC	ZSM_CFG
ZS TIME OUT	ZS Time Out	5 to 60	min	5	ZSM_TMR
ZS POLL RATE	Zone sensor poll rate	1 to 100	sec	5	ZSPOLLRT
ZS UNIT	Zone sensor unit	0=degrees F		0=degrees F	ZSUNIT
ZS FRC UNOC ENBL	ZS Force Unoccup enable	Yes/No		No	ZSFUNEN
ZS FRC UNOC DELAY	ZS Force unocc wt delay	Yes/No		No	ZSFUNWT
ZS TLO CONT ENBL	ZS TLO Cont Enable	Yes/No		No	ZSTLOEN
TLO SET DURING OC	ZS TLO set during occ	Yes/No		No	ZSTLSOC
ZS UI MODE	Zone sensor UI Mode	1=Dual Offsets		1=Dual Offsets	ZSUIM
NETWORK CHKLIST	NETWORK SETUP CHECKLIST	0=Undone, 1=Perfom, 2=Done		0=Undone	CHK_NET
DISPLAY SETTINGS	User Display Configurations Menu				
METRIC DISPLAY	Metric Display	Yes/No		No	DISPUNIT
LANGUAGE	Display Language Select	0=English, 1=Spanish		0=English	LANGUAGE
CONTRAST ADJUST	LCD Contrast Adjustment	1 to 10		5	LCD_CONT
PASSWORD ENABLE?	User Password Protection	Enable/Disable		Enable	PASS_EBL

Table B — Settings Main Menu Layout (cont)

DISPLAY TEXT	EXPANDED DISPLAY TEXT	VALUES	UNITS	DEFAULT	POINT
VIEW USER PASSWORD	View User Password Menu				
CHANGE USER PASSWORD	Change User Password Menu				
DATE	Current Date	MM/DD/YYYY			DATE
TIME	Clock Hour and Minute	xx:xx			TIME
STARTUP DELAY	Unit Startup Delay	10 to 600	sec	30	STARTDLY
UNIT CONTROL TYPE	Unit Control Type	0=TSTAT, 1=SPACE SEN, 2=RAT SEN		0=TSTAT	CTRLTYPE
THERMOSTAT TYPE	Thermostat Hardware Type	0=CONV 2C2H, 1=DIGI 2C2H, 2=CONV 3C2H, 3=DIGI 3C2H		0=CONV 2C2H	STATTYPE
DIRTY FILTER TIME	Change Filter Timer	0 to 9999	hrs	0	FILTLIFE
TIME BTWN DEFROST	Min Time BTWN Defrosts	30 to 120	min	60	MINDFINT
HEATING STAGE QTY	Number of Heating Stages	0 to 2		1	NUMHSTGS
VENT METHOD	Ventilation Method	0=NONE, 1=ECON, 2=2POS DMPR, 3=ERV, 4=ECON ERV		0: No FIOP 1: Economizer FIOP 2: Two Position Damper FIOP	VENTTYPE
FREE COOL MAX OAT	Free Cooling Max OAT	0 to 90	°F	65	MAXFREET
QUICK SETUP CONFIG	QUICK SETUP CONFIG MENU				
FIRE SW CHANNEL	Fire Switch Channel	0=None, 1=MBB DI12, 2=MBB DI13, 3=MBB DI14, 4=MBB DI02, 5=MBB DI03, 6=MBB Y3		0: No FIOP 5: FIOP	FIRECHAN
IDF HIGH COOL SPD	IDF High Cool Speed-RPM	0 to 3000	RPM	1708: Size 04 Medium Static Fan 1942: Size 04 High Static Fan 1693: Size 05 Medium Static Fan 1919: Size 05 High Static Fan 230v 1 ph 2075: Size 05 High Static Fan 230v 3ph, 460v, 575v 1864: Size 06 Medium Static Fan 2075: Size 06 High Static Fan 230v 1 ph 2212: Size 06 High Static Fan 230v 3ph, 460v, 575v 1973: FEQ 07 Medium Static Fan 2212: Size 07 High Static Fan 1560: Size 08-12, 17-24 Std/ Med Static Fan 1716: Size 08-12, 17-24 High Static Fan 1716: Size 14 and 28 1560: GEQ 07-12 Std/Med Static 1716: GEQ 07-12 High Static	RPM_HCL

Table B — Settings Main Menu Layout (cont)

DISPLAY TEXT	EXPANDED DISPLAY TEXT	VALUES	UNITS	DEFAULT	POINT
IDF VENT SPD	IDF Vent Speed-RPM	0 to 3000	RPM	1281: Size 04 Medium Static Fan 1457: Size 04 High Static Fan 1269: Size 05 Medium Static Fan 1439: Size 05 High Static Fan 230v 1 ph 1556: Size 05 High Static Fan 230v 3ph, 460v, 575v 1398: Size 06 Medium Static Fan 1556: Size 06 High Static Fan 230v 1 ph 1659: Size 06 High Static Fan 230v 3ph, 460v, 575v 1302: FEQ 07 Medium Static Fan 1460: FEQ 07 High Static Fan 780: FEQ 08-12 Std/Med Static Fan 858: FEQ 08-12 High Static Fan 936: Size 17-24 Std/Med Static Fan 1030: Size 17-24 High Static Fan 858: FEQ 14 1030: FEQ 28 936: GEQ 07-12 Std/Med Static 1030: GEQ 07-12 High Static	RPM_VENT
IDF HEAT SPD	IDF Heat Speed-RPM	0 to 3000	RPM	same as IDF HIGH COOL SPD	RPM_HEAT
QUICK SET CHKLIST	QUICK SETUP CHECKLIST	0=Undone, 1=Perfom, 2=Done		0=Undone	CHK_QUIK

Table C — Alerts/Faults Main Menu Layout

DISPLAY TEXT	EXPANDED DISPLAY TEXT	VALUES	WRITE STATUS	POINT
ALERTS/FAULTS	Alerts/Faults Menu			
ACTIVE FAULTS	Active Faults Menu			
ACTIVE ALERTS	Active Alerts Menu			
HISTORY	History Of Faults And Alerts Menu			
RESET FAULT/ALERT	Reset All Current Alarms	Yes/No	Command	ALRESET

Table D — Service Main Menu Layout

DISPLAY TEXT	EXPANDED DISPLAY TEXT	VALUES	UNITS	WRITE STATUS	POINT
SERVICE	Service Menu				
UNIT TESTS	Unit Tests Menu				
TEST MODE	Service Test Mode Enable	On/Off		Command	
SERVICE TEST	Service Test Menu				
INDEPENDENTS	INDEPENDENT TEST MENU				
ECON POS TEST	Economizer Position Test	0 to 100	%	Command	S_DAMPER
BUMP COMP A1 TEST	Compressor Bump A1 Test	On/Off		Command	S_BMPA1
BUMP COMP A2 TEST	Compressor Bump A2 Test	On/Off		Command	S_BMPA2
REV VALVE SOL TST	Rev.Val. Sole. Cir.A Tst	On/Off		Command	S_RVS_A
LLSV RELAY TEST	LiqLine Solenoid Test	On/Off		Command	S_LLSV
CCH RELAY 1 TEST	Crankcase Heater 1 test	On/Off		Command	S_CCHR1
ALARM RELAY TEST	Alarm Output Relay Test	On/Off		Command	S_ALARM
PE1 RELAY TEST	Power Exhaust 1 Test	On/Off		Command	S_PE_1
PE2 RELAY TEST	Power Exhaust 2 Test	On/Off		Command	S_PE_2
2POS/ERV RLY TEST	2Position/ERV Relay Test	On/Off		Command	S_ERV2P
DAMPER CALIBRATION	Damper Calibration Menu				
CALIBRATE DAMPER	Econ Damper Calibration	On/Off		Command	S_ECOCAL
FAN TESTS	Indoor and Outdoor Fan tests Menu				
IDF SPEED TEST	Indoor Fan Speed Test	0 to 100	%	Command	S_IDFSPD
CONVERTED IDF RPM	Converted IDF Speed	0 to 5000	RPM		IFRPMTST

Table D — Service Main Menu Layout (cont)

DISPLAY TEXT	EXPANDED DISPLAY TEXT	VALUES	UNITS	WRITE STATUS	POINT
IDF MANUAL TRANS	IDF Manual Transition	Yes/No		Command	S_IDFTRN
ODF ON/OFF TEST	ODF On/Off Relay Test	On/Off		Command	S_ODFON
ODF RELAY TEST	ODF Speed Relay Test	On/Off		Command	S_OFRSPD
ODF RELAY2 TEST	ODF Relay2 Test	On/Off		Command	S_OFR2
ODF RELAY3 TEST	ODF Relay3 Test	On/Off		Command	S_OFR3
COOL TESTS	Cooling Test Menu				
COOL A1 TEST	Cooling W/Comp.A1 Test	On/Off		Command	S_COOLA1
COOL A2 TEST	Cooling W/Comp.A2 Test	On/Off		Command	S_COOLA2
CIR A LOADER TEST	Cooling W/Comp.ALD Test	On/Off		Command	S_COLALD
IDF SPEED TEST	Indoor Fan Speed Test	0 to 100	%	Command	S_IDFSPD
ODF ON/OFF TEST	ODF On/Off Relay Test	On/Off		Command	S_ODFON
ODF RELAY TEST	ODF Speed Relay Test	On/Off		Command	S_OFRSPD
ODF RELAY2 TEST	ODF Relay2 Test	On/Off		Command	S_OFR2
ODF RELAY3 TEST	ODF Relay3 Test	On/Off		Command	S_OFR3
HEAT TESTS	Heating Test Menu				
MECH HEAT TEST	Mechanical Heating Test	On/Off		Command	S_MECHT
HEAT 1 TEST	Heating Stage 1 Test	On/Off		Command	S_HEAT1
HEAT 2 TEST	Heating Stage 2 Test	On/Off		Command	S_HEAT2
IDF SPEED TEST	Indoor Fan Speed Test	0 to 100	%	Command	S_IDFSPD
DEFROST TEST	Defrost Test	On/Off		Command	S_DFRST
AUTOMATIC TEST	Automatic Test Menu				
AUTO INDP TEST	AUTO INDEPENDENT TEST	Yes/No		Command	AUTOINDP
AUTO COOL TEST	RUN AUTO COOLING TEST	Yes/No		Command	AUTOCOOL
AUTO HEAT TEST	RUN AUTO HEATING TEST	Yes/No		Command	AUTOHEAT
AUTO SYSTEM TEST	RUN AUTO SYSTEM TEST	Yes/No		Command	AUTOSYS
UNIT INFORMATION	Unit Information Menu				
MODEL #	Equipment Model number	xxxxxxxxxxxxxxxxxx		Command	EQ_MOD
SERIAL #	Equipment Serial number	xxxxxxxxxx		Command	EQ_SER
VERSIONS	Versions Menu				
MAIN APP	Application SW Version	CESR131805-01-xx			FW_CESR
BOOTLOADER	Bootloader SW Version	CESR131659-xx-xx			BL_CESR
USER MEASURED DATA	User Measured Data Menu				
SUPPLY VOLTAGE L1	Supply Voltage Leg 1	0 to 700	V	Command	L1VOLTS
SUPPLY VOLTAGE L2	Supply Voltage Leg 2	0 to 700	V	Command	L2VOLTS
SUPPLY VOLTAGE L3	Supply Voltage Leg 3	0 to 700	V	Command	L3VOLTS
COMP A1 AMPS L1	Comp A1 Amps Leg 1	0 to 100	A	Command	CA1L1_A
COMP A1 AMPS L2	Comp A1 Amps Leg 2	0 to 100	A	Command	CA1L2_A
COMP A1 AMPS L3	Comp A1 Amps Leg 3	0 to 100	A	Command	CA1L3_A
COMP A2 AMPS L1	Comp A2 Amps Leg 1	0 to 100	Amps	Command	CA2L1_A
COMP A2 AMPS L2	Comp A2 Amps Leg 2	0 to 100	Amps	Command	CA2L2_A
COMP A2 AMPS L3	Comp A2 Amps Leg 3	0 to 100	Amps	Command	CA2L3_A
E.HEAT AMPS L1	Elec. Heat Amps Leg 1	0 to 100	A	Command	EHTL1_A
E.HEAT AMPS L2	Elec. Heat Amps Leg 2	0 to 100	A	Command	EHTL2_A
E.HEAT AMPS L3	Elec. Heat Amps Leg 3	0 to 100	A	Command	EHTL3_A
CONTINUE?	Start Diag Report	Yes/No		Command	GO_DIAG
RUN HOURS & CYCLES	Run Hours & Cycles Menu				
RUN HOURS DATA MENU	Run hours menu				
2POS/ERV RUN HOUR	2Position/ERV Run Hours	xxxxxx.x	hrs		HR_ERV2P
COMP A1 RUN HOURS	Compressor A1 Run Hours	xxxxxx.x	hrs		HR_A1
COMP A2 RUN HOURS	Compressor A2 Run Hours	xxxxxx.x	hrs		HR_A2
CMP ALD RUN HOURS	CMP A1 Loader Run Hours	xxxxxx.x	hrs		HR_ALDR
ALM RELAY HOURS	Alarm Relay Run Hours	xxxxxx.x	hrs		HR_ALM
CCH RELAY HOURS	CCH1 Relay Run Hours	xxxxxx.x	hrs		HR_CCHR1
ECON RUN HOURS	Econ Damper Run Hours	xxxxxx.x	hrs		HR_DAMP
DEFROST HOURS	Defrost Run Hours	xxxxxx.x	hrs		HR_DFRST
FULL LOAD HOURS	Unit Full Load Run Hours	xxxxxx.x	hrs		HR_FLOAD
FREE COOL HOURS	Free Cooling Run Hours	xxxxxx.x	hrs		HR_FREEC
HEAT 1 RUN HOURS	Heat Stage 1 Run Hours	xxxxxx.x	hrs		HR_HTR_1
HEAT 2 RUN HOURS	Heat Stage 2 Run Hours	xxxxxx.x	hrs		HR_HTR_2
IDF RUN HOURS	Indoor Fan Run Hours	xxxxxx.x	hrs		HR_IDF
IDF2 RUN HOURS	Indoor Fan2 Run Hours	xxxxxx.x	hrs		HR_IDF2

Table D — Service Main Menu Layout (cont)

DISPLAY TEXT	EXPANDED DISPLAY TEXT	VALUES	UNITS	WRITE STATUS	POINT
LLSV RUN HOURS	LiquidLineValv Run Hours	xxxxxx.x	hrs		HR_LLSV
MAX IDF RUN HOURS	Max Fan Speed Run Hours	xxxxxx.x	hrs		HR_MAXF
MECH COOL HOURS	MechanicalCool Run Hours	xxxxxx.x	hrs		HR_MECHC
MECH HEAT HOURS	MechanicalHeat Run Hours	xxxxxx.x	hrs		HR_MECHT
ODF ON HOURS	ODF Run Hours	xxxxxx.x	hrs		HR_ODF
ODF RELAY HOURS	ODF Relay Run Hours	xxxxxx.x	hrs		HR_OFR
ODF RELAY 2 HOURS	ODF Relay 2 Run Hours	xxxxxx.x	hrs		HR_OFR2
ODF RELAY 3 HOURS	ODF Relay 3 Run Hours	xxxxxx.x	hrs		HR_OFR3
PE1 RELAY HOURS	Power Exhaust1 Run Hours	xxxxxx.x	hrs		HR_PE_1
PE2 RELAY HOURS	Power Exhaust2 Run Hours	xxxxxx.x	hrs		HR_PE_2
RVS_A RUN HOURS	ReverseSolValv Run Hours	xxxxxx.x	hrs		HR_RVS_A
TEST MODE HOURS	Service Test Run Hours	xxxxxx.x	hrs		HR_STEST
VENT IDF HOURS	Vent IDF Run Hours	xxxxxx.x	hrs		HR_VENTF
START COUNT DATA MENU	Start Counts menu				
2POS/ERV STARTS	2Position/ERV Starts	xxxxxx			ST_ERV2P
COMP A1 STARTS	Compressor A1 Starts	xxxxxx			ST_A1
COMP A2 STARTS	Compressor A2 Starts	xxxxxx			ST_A2
CMP ALD STARTS	CMP A1 Loader Starts	xxxxxx			ST_ALDR
ALM RELAY STARTS	Alarm Relay Starts	xxxxxx			ST_ALM
ALM RESET COUNTS	Alarm Reset Counts	xxxxxx			ST_ALRST
CCH RELAY STARTS	CCH1 Relay Starts	xxxxxx			ST_CCHR1
DAMPER STARTS	Economizer Damper Starts	xxxxxx			ST_DAMP
DEFROST STARTS	Defrost Mode Starts	xxxxxx			ST_DFRST
FULL LOAD STARTS	Unit Full Load Starts	xxxxxx			ST_FLOAD
FREE COOL STARTS	Free Cooling Starts	xxxxxx			ST_FREEC
HEAT 1 STARTS	Heat Stage 1 Starts	xxxxxx			ST_HTR_1
HEAT 2 STARTS	Heat Stage 2 Starts	xxxxxx			ST_HTR_2
IDF STARTS	Indoor Fan Starts	xxxxxx			ST_IDF
IDF2 STARTS	Indoor Fan 2 Starts	xxxxxx			ST_IDF2
LLSV STARTS	Liquid Line Valve Starts	xxxxxx			ST_LLSV
MAX IDF SPD START	Max IDF Speed Starts	xxxxxx			ST_MAXF
MECH COOL START	Mechanical Cool Starts	xxxxxx			ST_MECHC
MECH HEAT START	Mechanical Heat Starts	xxxxxx			ST_MECHT
ODF ON STARTS	ODF Starts Count	xxxxxx			ST_ODF
ODF RELAY STARTS	ODF Relay Starts	xxxxxx			ST_OFR
ODF RELAY 2 STARTS	ODF Relay 2 Starts	xxxxxx			ST_OFR2
ODF RELAY 3 STARTS	ODF Relay 3 Starts	xxxxxx			ST_OFR3
PE1 RELAY STARTS	Power Exhaust 1 Starts	xxxxxx			ST_PE_1
PE2 RELAY STARTS	Power Exhaust 2 Starts	xxxxxx			ST_PE_2
POR COUNT	Power Cycle Counts	xxxxxx			ST_POR
RVS_A STARTS	ReverseSolValv Starts	xxxxxx			ST_RVS_A
TEST MODE STARTS	Service Test Starts	xxxxxx			ST_STEST
VENT FAN STARTS	Ventilation Fan Starts	xxxxxx			ST_VENTF
RESET COUNTS MENU	Reset Counts menu				
2POS/ERV RESETS	2Position/ERV ResetCount	xxxxxx			RS_ERV2P
COMP A1 RESET QTY	Comp A1 Resets Count	xxxxxx			RS_A1
COMP A2 RESET QTY	Comp A2 Resets Count	xxxxxx			RS_A2
CMP ALD RESET QTY	A1 Loader Resets Count	xxxxxx			RS_ALDR
ALM RLY RESET QTY	Alarm Relay Resets Count	xxxxxx			RS_ALM
ALM RESET RESETS	Alarm Reset Resets Count	xxxxxx			RS_ALRST
CCH RELAY RESETS	CCH1 Relay Resets Count	xxxxxx			RS_CCHR1
DAMPER RESET QTY	Econ Damper Resets Count	xxxxxx			RS_DAMP
DEFROST RESET QTY	Defrost Reset Count	xxxxxx			RS_DFRST
FULL LOAD RESETS	Full Load Resets Count	xxxxxx			RS_FLOAD
FREE COOL RESETS	Free Cooling Reset Count	xxxxxx			RS_FREEC
HEAT 1 RESET QTY	Heat Stage 1 Reset Count	xxxxxx			RS_HTR_1
HEAT 2 RESET QTY	Heat Stage 2 Reset Count	xxxxxx			RS_HTR_2
IDF RESET QTY	Indoor Fan Reset Count	xxxxxx			RS_IDF
IDF2 RESET QTY	Indoor Fan 2 Reset Count	xxxxxx			RS_IDF2
LLSV RESET QTY	LiquidLineValv Reset Cnt	xxxxxx			RS_LLSV
MAX IDF RESET QTY	Max IDF Spd Resets Count	xxxxxx			RS_MAXF

Table D — Service Main Menu Layout (cont)

DISPLAY TEXT	EXPANDED DISPLAY TEXT	VALUES	UNITS	WRITE STATUS	POINT
MECH.CL RESET QTY	Mech Cool Reset Count	xxxxxx			RS_MECHC
MECH.HT RESET QTY	Mech Heat Reset Count	xxxxxx			RS_MECHT
ODF ON RESET QTY	ODF Resets Count	xxxxxx			RS_ODF
ODF RELAY RESETS	ODF Relay Resets Counts	xxxxxx			RS_OFR
ODF RELAY 2 RESETS	ODF Relay 2 Resets Counts	xxxxxx			RS_OFR2
ODF RELAY 3 RESETS	ODF Relay 3 Resets Counts	xxxxxx			RS_OFR3
PE1 RESET QTY	P.Exhaust 1 Resets Count	xxxxxx			RS_PE_1
PE2 RESET QTY	P.Exhaust 2 Resets Count	xxxxxx			RS_PE_2
POR RESET QTY	Power Cycle Resets Count	xxxxxx			RS_POR
RVS_A RESET QTY	RevSolValv Reset Count	xxxxxx			RS_RVS_A
TEST MODE RESETS	Service Test Reset Count	xxxxxx			RS_STEST
VENT IDF RESETS	Vent IDF Resets Count	xxxxxx			RS_VENTF
POWER RESET HISTORY	Power On Reset History Menu				
POWRES00	Power Reset Event 00	mm/dd/yy, hh:mm:ss			POWRES00
POWRES01	Power Reset Event 01	mm/dd/yy, hh:mm:ss			POWRES01
POWRES02	Power Reset Event 02	mm/dd/yy, hh:mm:ss			POWRES02
POWRES03	Power Reset Event 03	mm/dd/yy, hh:mm:ss			POWRES03
POWRES04	Power Reset Event 04	mm/dd/yy, hh:mm:ss			POWRES04
POWRES05	Power Reset Event 05	mm/dd/yy, hh:mm:ss			POWRES05
POWRES06	Power Reset Event 06	mm/dd/yy, hh:mm:ss			POWRES06
POWRES07	Power Reset Event 07	mm/dd/yy, hh:mm:ss			POWRES07
POWRES08	Power Reset Event 08	mm/dd/yy, hh:mm:ss			POWRES08
POWRES09	Power Reset Event 09	mm/dd/yy, hh:mm:ss			POWRES09
ALARM RESET HISTORY	Alarm Reset History Menu				
ALMRES00	Alarm Reset Event 00	mm/dd/yy, hh:mm:ss			ALMRES00
ALMRES01	Alarm Reset Event 01	mm/dd/yy, hh:mm:ss			ALMRES01
ALMRES02	Alarm Reset Event 02	mm/dd/yy, hh:mm:ss			ALMRES02
ALMRES03	Alarm Reset Event 03	mm/dd/yy, hh:mm:ss			ALMRES03
ALMRES04	Alarm Reset Event 04	mm/dd/yy, hh:mm:ss			ALMRES04
ALMRES05	Alarm Reset Event 05	mm/dd/yy, hh:mm:ss			ALMRES05
ALMRES06	Alarm Reset Event 06	mm/dd/yy, hh:mm:ss			ALMRES06
ALMRES07	Alarm Reset Event 07	mm/dd/yy, hh:mm:ss			ALMRES07
ALMRES08	Alarm Reset Event 08	mm/dd/yy, hh:mm:ss			ALMRES08
ALMRES09	Alarm Reset Event 09	mm/dd/yy, hh:mm:ss			ALMRES09
ALMRES10	Alarm Reset Event 10	mm/dd/yy, hh:mm:ss			ALMRES10
ALMRES11	Alarm Reset Event 11	mm/dd/yy, hh:mm:ss			ALMRES11
ALMRES12	Alarm Reset Event 12	mm/dd/yy, hh:mm:ss			ALMRES12
ALMRES13	Alarm Reset Event 13	mm/dd/yy, hh:mm:ss			ALMRES13
ALMRES14	Alarm Reset Event 14	mm/dd/yy, hh:mm:ss			ALMRES14
ALMRES15	Alarm Reset Event 15	mm/dd/yy, hh:mm:ss			ALMRES15
ALMRES16	Alarm Reset Event 16	mm/dd/yy, hh:mm:ss			ALMRES16
ALMRES17	Alarm Reset Event 17	mm/dd/yy, hh:mm:ss			ALMRES17
ALMRES18	Alarm Reset Event 18	mm/dd/yy, hh:mm:ss			ALMRES18
ALMRES19	Alarm Reset Event 19	mm/dd/yy, hh:mm:ss			ALMRES19
HARDWARE	Hardware Information Menu				
HARDWARE INPUTS	Hardware inputs menu				
OAT SENSOR VALUE	Outdoor Air Temp Sensor	xxx.x	°F		OAT_LOC
RAT SENSOR VALUE	Return Air Temp Sensor	xxx.x	°F		RAT_LOC
SPT SENSOR VALUE	Space Temperature Sensor	xxx.x	°F		SPT_LOC
SPTO SENSOR VALUE	Local Space Temp Offset	xxxx	ΔF		SPTO_LOC
SPRH SENSOR VALUE	SPRH Sensor Value	0 to 100	%		SPRH_LOC
OARH SENSOR VALUE	OARH Sensor Value	0 to 100	%		OARH_LOC
RARH SENSOR VALUE	RARH Sensor Value	0 to 100	%		RARH_LOC
IAQ SENSOR VALUE	IAQ Sensor value	xxxx	PPM		IAQ_LOC
OAQ SENSOR VALUE	OAQ Sensor Value	xxxx	PPM		OAQ_LOC
OACFM SENSOR VALUE	OACFM Sensor value	xxx.x	CFM		OCFM_LOC
ASSIGNED INPUTS/ OUPUTS	Assigned Input/Output Channels				

Table D — Service Main Menu Layout (cont)

DISPLAY TEXT	EXPANDED DISPLAY TEXT	VALUES	UNITS	WRITE STATUS	POINT
AI06 FUNCTION	Assigned AI06 Function	0=None, 1=IAQ, 2=OARH, 3=RARH, 4=OAQ, 5=SPRH, 6=OACFM			MBBAI06F
AI07 FUNCTION	Assigned AI07 Function				MBBAI07F
AI08 FUNCTION	Assigned AI08 Function				MBBAI08F
DI02 FUNCTION	Assigned DI02 Function	0=None, 1=COFS, 2=REMOCC, 3=REMOFF, 4=FILTER, 5=ENTHALPY, 6=GEN STAT, 7=HUMSTAT, 8=IAQOVRD, 9=SMK EVAC, 10=SMK PRESS, 11=SMK PURGE, 12=FIREDOWN, 13=FANSTATUS, 14=PHASEMON			MBBDI02F
DI03 FUNCTION	Assigned DI03 Function	See DI02 FUNCTION			MBBDI03F
MBB Y3 FUNCTION	Assigned MBB Y3 Function	See DI02 FUNCTION			MBBDI09F
DI12 FUNCTION	Assigned DI12 Function	See DI02 FUNCTION			MBBDI12F
DI13 FUNCTION	Assigned DI13 Function	See DI02 FUNCTION			MBBDI13F
DI14 FUNCTION	Assigned DI14 Function	See DI02 FUNCTION			MBBDI14F
RELAY 06 FUNCTION	Assigned Rly 06 Function	0=None, 1=ALM Relay, 2=PE1, 3=PE2			MBBRY06F
RELAY 11 FUNCTION	Assigned Rly 11 Function	0=None, 1=ALM Relay, 2=PE1, 3=PE2			MBBRY11F
INDOOR FAN INPUTS/ OUTPUTS	Indoor Fan Input/Outputs Menu				
IDF SPEED REQUEST	Requested IDF Speed	0 to 100	%		RQFANSPD
COMMANDED IDF RPM	IDF Commanded RPM	0 to 3000	RPM		FSPD_RPM
IDF SPEED OUTPUT	Commanded IDF Speed	0 to 100	%		FANSPEED
COMMAND IDF2 RPM	IDF2 Commanded RPM	0 to 3000	RPM		FSP2_RPM
IDF2 SPEED OUTPUT	Commanded IDF Speed2	0 to 100	%		FANSPED2
MBB PART #	MBB Part Number	CEPL131117-xx-R			BD_CEPL
MBB PP #	MBB Program Part Number	CEPP130644-xx-xx-xx-R			BD_CEPP
MBB SERIAL #	Base Board serial number	xxxxMxxxxx			BD_SER
CALIBRATION	Calibration Menu				
OAT TRIM OFFSET	OAT Sensor Trim Offset	-10 to 10	°F	Configurable	OAT_TRIM
RAT TRIM OFFSET	RAT Sensor Trim Offset	-30 to 30	°F	Configurable	RAT_TRIM
FST TRIM OFFSET	FST Sensor Trim Offset	-10 to 10	°F	Configurable	FST_TRIM
SPT TRIM OFFSET	SPT Sensor Trim Offset	-30 to 30	°F	Configurable	SPT_TRIM
SLIDER SEN. TRIM	SPTO Sensor Offset Trim	-1 to 1	°F	Configurable	SPTOTRIM
SPRH TRIM OFFSET	SPRH Sensor Trim Offset	-15 to 15	%	Configurable	SPRHTRIM
IAQ TRIM OFFSET	IAQ sensor trim offset	-200 to 200	PPM	Configurable	IAQ_TRIM
OAQ TRIM OFFSET	OAQ Sensor Trim Offset	-200 to 200	PPM	Configurable	OAQ_TRIM
OARH TRIM OFFSET	OARH Sensor Trim Offset	-15 to 15	%	Configurable	OARHTRIM
RARH TRIM OFFSET	RARH Sensor Trim Offset	-15 to 15	%	Configurable	RARHTRIM
CIR.A SSP TRIM	Cir.A SSP Sensor Trim	-50 to 50	PSI	Configurable	SSPATRIM
CIR.A SDP TRIM	Cir.A SDP Sensor Trim	-50 to 50	PSI	Configurable	SDPATRIM
ECO FEEDBACK TRIM	Econ Fdback Trim Offset	-15 to 15	%	Configurable	EC1DTRIM
OACFM TRIM OFFSET	OACFM sensor trim offset	-200 to 200	CFM	Configurable	OCFMTRIM
ECON DAMPER CAL.	Econ Damper Calibration				
DMPR LO CAL ERROR	Damper Low Calib. Error	xx	%		ECOMINCA
DMPR HI CAL ERROR	Damper High Calib. Error	xx	%		ECOMAXCA
COMMISSION REPORTS	Commission Report Menu				
SYSTEM STARTUP CHECKLIST	SYSTEM STARTUP CHECKLIST MENU				

Table D — Service Main Menu Layout (cont)

DISPLAY TEXT	EXPANDED DISPLAY TEXT	VALUES	UNITS	WRITE STATUS	POINT
QUICK SET CHKLIST	QUICK SETUP CHECKLIST	0=Undone, 1=Perform, 2=Done		Configurable	CHK_QUIK
NETWORK CHKLIST	NETWORK SETUP CHECKLIST	0=Undone, 1=Perform, 2=Done		Configurable	CHK_NET
SYSTEM AUTOTEST	Checklist Auto Test	0=Undone, 1=Perform, 2=Done		Configurable	CHK_ATST
ADVANCED SERVICE	Advanced Service Restricted Access Menu				
RESTORE DEFAULTS?	Factory Reset Configs?	Yes/No		Command	RESFDFLT
EDIT MODEL NUMBER	Edit Equipment Model Number				
EDIT SER NUMBER	Edit Equip Ser Num Menu				
CLEAR COMPONENT DATA	RESET COMPONENT DATA MENU				
2POS/ERV DATA	Reset 2Position/ERV Data	Yes/No		Command	CR_ERV2P
COMP A1 DATA	Reset Compressor A1 Data	Yes/No		Command	CR_A1
COMP A2 DATA	Reset Compressor A2 Data	Yes/No		Command	CR_A2
COMP ALD DATA	Reset CompressorALD Data	Yes/No		Command	CR_ALD
ALARM RELAY DATA	Reset Alarm Relay Data	Yes/No		Command	CR_ALM
ALARM RESET DATA	Reset Alarm Resets Data	Yes/No		Command	CR_ALRST
CCH RELAY DATA	Reset CCH1 Relay Data	Yes/No		Command	CR_CCHR1
ECON DAMPER DATA	Reset Econ Damper Data	Yes/No		Command	CR_DAMP
DEFROST DATA	Reset Defrost run Data	Yes/No		Command	CR_DFRST
FULL LOAD DATA	Reset Full Load Data	Yes/No		Command	CR_FLOAD
FREE COOL DATA	Reset Free Cooling Data	Yes/No		Command	CR_FREEC
HEAT 1 DATA	Reset Heat Stage 1 Data	Yes/No		Command	CR_HTR_1
HEAT 2 DATA	Reset Heat Stage 2 Data	Yes/No		Command	CR_HTR_2
IDF RUN DATA	Reset Indoor Fan Data	Yes/No		Command	CR_IDF
LLSV DATA	Reset LLSV run Data	Yes/No		Command	CR_LLSV
IDF MAX SPD DATA	Reset Max Fan Speed Data	Yes/No		Command	CR_MAXF
MECH COOL DATA	Reset Mech Cool run Data	Yes/No		Command	CR_MECHC
MECH HEAT DATA	Reset MECHT run Data	Yes/No		Command	CR_MECHT
ODF ON DATA	Reset ODF Run Data	Yes/No		Command	CR_ODF
ODF RELAY2 DATA	Reset ODF Speed Relay 2	Yes/No		Command	CR_OFR2
ODF RELAY3 DATA	Reset ODF Speed Relay 3	Yes/No		Command	CR_OFR3
ODF RELAY DATA	Reset ODF Speed Relay	Yes/No		Command	CR_OFR
PE1 RELAY DATA	Reset Pwr Exhaust 1 Data	Yes/No		Command	CR_PE_1
PE2 RELAY DATA	Reset Pwr Exhaust 2 Data	Yes/No		Command	CR_PE_2
POWER RESET DATA	Reset Power Resets Data	Yes/No		Command	CR_POR
RVS_A DATA	Reset RVS_A run Data	Yes/No		Command	CR_RVS_A
TEST MODE DATA	Reset Service Test Data	Yes/No		Command	CR_STEST
VENT IDF DATA	Reset Vent IDF Data	Yes/No		Command	CR_VENTF
RESTRICTED ACCESS	Restricted Access Only				
IDF CURVE LO PWM	IDF Curve Low End PWM	0 to 100	%	Configurable	IFMLOPWM
IDF CURVE HI PWM	IDF Curve High End PWM	0 to 100	%	Configurable	IFMHIPWM
MIN SPEED TIME	IDF Start Speed Time	xxx	sec	Configurable	IDFSSTIM
MIN START SPEED	IDF Min Start RPM	xxxx	RPM	Configurable	IDFSTSPD

Table E — Inputs Main Menu Layout

DISPLAY TEXT	EXPANDED DISPLAY TEXT	VALUES	UNITS	WRITE STATUS	POINT
INPUTS	Inputs Menu				
TEMPERATURES	Temperatures Menu				
SUPPLY AIR TEMP	Supply Air Temperature	xxx..x	°F		SAT
OUTDOOR AIR TEMP	Outdoor Air Temperature	xxx.x	°F	Forcible	OAT
RETURN AIR TEMP	Return Air Temperature	xxx.x	°F	Forcible	RAT
SPACE TEMPERATURE	Space Temperature	xxx.x	°F	Forcible	SPACE_T
SLIDER OFFSET VAL	Space Temperature Offset	xx.x	ΔF	Forcible	SPTO
CIR.A SUC TEMP	Cir.A Sat.Suction Temp	xxx.x	°F		SST_A
CIR.A DIS. TEMP	Cir.A Sat.Discharge Temp	xxx.x	°F		SDT_A
FAN SUPPLY TEMP	Fan Supply Air Temp	xxx.x	°F		FST
PRESSURES	Pressures Menu				

Table E — Inputs Main Menu Layout (cont)

DISPLAY TEXT	EXPANDED DISPLAY TEXT	VALUES	UNITS	WRITE STATUS	POINT
CIR.A SUC. PRESS	Cir.A Suction Pressure	xxx.x	PSI		SSP_A
CIR.A DIS. PRESS	Cir.A Discharge Pressure	xxx.x	PSI		SDP_A
CIR.A PRESS RATIO	Circuit A Pressure Ratio	xx.xx			CIRA_PR
BAROMETRIC PRESS	Barometric Pressure	xx.xx	Hg	Forcible	BARP
THERMOSTAT	Thermostat Inputs menu				
TSTAT G INPUT	Thermostat G Input	On/Off		Forcible	G
TSTAT Y1 INPUT	Thermostat Y1 Input	On/Off		Forcible	Y1
TSTAT Y2 INPUT	Thermostat Y2 Input	On/Off		Forcible	Y2
TSTAT W1 INPUT	Thermostat W1 Input	On/Off		Forcible	W1
TSTAT W2 INPUT	Thermostat W2 Input	On/Off		Forcible	W2
SWITCH INPUTS	Switch Inputs Menu				
DEFROST SWITCH	Defrost Switch	Open/Close			DFRST_SW
CIR.A HPS	Cir.A High Pressure Sw	Open/Close			CIRA_HPS
IDF LIMIT SWITCH	IDF Manual Limit Switch	Open/Close			IDF_LSM
HUMIDISTAT	Humidistat Input	On/Off		Forcible	HUMDSTAT
FIRE SHUTDOWN	Fire Shutdown Switch	Alarm/Normal		Forcible	FIREDOWN
COFS	COFS Switch State	High/Low		Forcible	COFS
PHASE MONITOR SW	Phase Monitor Switch	Alarm/Normal		Forcible	PMR_STAT
FILTER STATUS SW	Filter Status Switch	Dirty/Clean		Forcible	FILTSTAT
REMOTE OCC SWITCH	Remote Occupancy Switch	On/Off		Forcible	REMOCC
REMOTE SHUTDOWN	Remote Shutdown Switch	On/Off		Forcible	REMSHUT
FAN STATUS SWITCH	Fan Status Switch	On/Off		Forcible	FAN_STAT
GENERAL STATUS SW	General Status Switch	Alarm/Normal		Forcible	GENSTAT
IAQ OVRRD SWITCH	IAQ Override Switch	On/Off		Forcible	IAQ_OVRS
ENTHALPY SWITCH	Enthalpy Switch	High/Low		Forcible	ENTH_SW
SMOKE PURGE INPUT	Smoke Purge Switch	On/Off		Forcible	PURGE
SMOKE PRESSURE	Smoke Pressure Switch	On/Off		Forcible	PRESSURE
SMOKE EVAC INPUT	Smoke Evacuation Switch	On/Off		Forcible	EVAC
DISSIPATION INPUT	Refrig Dissipation Input	Open/Close			LEAK_DTC
ANALOG INPUTS	ANALOG Inputs Menu				
ECON ACT POSITION	Damper Actual Position	0 to 100	%		DAMPPOS
SPRH LEVEL	Space Relative Humidity	0 to 100	%	Forcible	SPRH
OARH LEVEL	OA Relative Humidity	0 to 100	%	Forcible	OARH
RARH LEVEL	RA Relative Humidity	0 to 100	%	Forcible	RARH
IAQ LEVEL	Indoor Air Quality Level	xxxx	PPM	Forcible	IAQ
OAQ LEVEL	OA Quality Level	xxxx	PPM	Forcible	OAQ
OUTDOOR AIR CFM	Outdoor Air in CFM	0 to 8000	CFM	Forcible	OACFM
GENERAL INPUTS	General Inputs Menu				
FILTER TIME LEFT	Filter hour remaining	xxxx	hrs		FILTLEFT
RESET FILTER TIME	Reset Filter Timer	Yes/No		Command	RESETFLT
OUTDOOR ENTHALPY	Outdoor Air Enthalpy	-9.6 to 334.2	BTU/LB	Forcible	OA_ENTH
RETURN ENTHALPY	Return Air Enthalpy	-9.6 to 334.2	BTU/LB	Forcible	RA_ENTH
DIFF AIR QUALITY	Differential Air Quality	-5000 to 5000	PPM		AQ_DIFF
NETWORK	Network Menu				
BMS OCC REQUEST	BMS Occupancy Request	0=UNOCC, 1=OCCUPIED, 2=DISABLED		Forcible	BMS_OCC
LINKAGE OCC REQ	Linkage Occupied Request	0=Unocc, 1=Occupied, 2=Disabled		Forcible	LNK_OCC
OAT NETWORK VALUE	Network OAT Value	xxx.x	°F	Forcible	OAT_NET
RAT NETWORK VALUE	Network Return Air Temp	xxx.x	°F	Forcible	RAT_NET
SPT NETWORK VAL.	Network Space Temp Value	xxx.x	°F	Forcible	SPT_NET
SPRH NETWORK VAL	Network SPRH Value	0 to 100	%	Forcible	SPRH_NET
OARH NETWORK VAL.	Network OARH Value	0 to 100	%	Forcible	OARH_NET
RARH NETWORK VAL.	Network RARH Value	0 to 100	%	Forcible	RARH_NET
IAQ NETWORK VALUE	Network IAQ Value	xxxx	PPM	Forcible	IAQ_NET
OAQ NETWORK VALUE	Network OAQ Value	xxxx	PPM	Forcible	OAQ_NET
OACFM NETWORK VAL	Network OACFM Value	xxx.x	CFM	Forcible	OCFM_NET
ZS SENSOR INFO	ZS Sensor Information				
ZS SPACE TEMP	Zone Sensor Temp Out	0	°F		ZSZT
ZS SPACE RH	Zone Sensor Humidity Out	0	%		ZSSPRH

Table E — Inputs Main Menu Layout (cont)

DISPLAY TEXT	EXPANDED DISPLAY TEXT	VALUES	UNITS	WRITE STATUS	POINT
ZS CO2	Zone Sensor CO2 Level	xxxx	PPM		ZSZCO2
ZS SPOFFSET	ZS Setpoint OffsetOutput	0	ΔF		ZSSPTO
ZS OVR TIME LEFT	ZS Override time remain	0	min		ZSOTR
ZS MOTION SENSOR	ZS Motion Sensor	0			ZSZM
ZS TEMPERATURE	ZS Space Temperature				
ZS1 TEMPERATURE	Zone Sensor 1 Temp	0	°F		ZS1ZT
ZS2 TEMPERATURE	ZS2 Temperature	0	°F		ZS2ZT
ZS3 TEMPERATURE	ZS3 Temperature	0	°F		ZS3ZT
ZS4 TEMPERATURE	ZS4 Temperature	0	°F		ZS4ZT
ZS5 TEMPERATURE	ZS5 Temperature	0	°F		ZS5ZT
ZS HUMIDITY	ZS Space Humidity				
ZS1 HUMIDITY	ZS1 Humidity	0	%		ZS1ZHUM
ZS2 HUMIDITY	ZS2 Humidity	0	%		ZS2ZHUM
ZS3 HUMIDITY	ZS3 Humidity	0	%		ZS3ZHUM
ZS4 HUMIDITY	ZS4 Humidity	0	%		ZS4ZHUM
ZS5 HUMIDITY	ZS5 Humidity	0	%		ZS5ZHUM
ZS CO2	ZS CO2				
ZS1 CO2	Zone Sensor1 CO2 Level	xxxx	PPM		ZS1ZCO2
ZS2 CO2	Zone Sensor2 CO2 Level	xxxx	PPM		ZS2ZCO2
ZS3 CO2	Zone Sensor3 CO2 Level	xxxx	PPM		ZS3ZCO2
ZS4 CO2	Zone Sensor4 CO2 Level	xxxx	PPM		ZS4ZCO2
ZS5 CO2	Zone Sensor5 CO2 Level	xxxx	PPM		ZS5ZCO2
ZS CSP OFFSET	ZS Cool Set Point Offset				
ZS1 CSP OFFSET	ZS1 cool setpoint offset	0	ΔF		ZS1CSOFF
ZS2 CSP OFFSET	ZS2 cool setpoint offset	0	ΔF		ZS2CSOFF
ZS3 CSP OFFSET	ZS3 cool setpoint offset	0	ΔF		ZS3CSOFF
ZS4 CSP OFFSET	ZS4 cool setpoint offset	0	ΔF		ZS4CSOFF
ZS5 CSP OFFSET	ZS5 cool setpoint offset	0	ΔF		ZS5CSOFF
ZS HSP OFFSET	ZS Heat Set Point Offset				
ZS1 HSP OFFSET	ZS1 heat setpoint offset	0	ΔF		ZS1HSOFF
ZS2 HSP OFFSET	ZS2 heat setpoint offset	0	ΔF		ZS2HSOFF
ZS3 HSP OFFSET	ZS3 heat setpoint offset	0	ΔF		ZS3HSOFF
ZS4 HSP OFFSET	ZS4 heat setpoint offset	0	ΔF		ZS4HSOFF
ZS5 HSP OFFSET	ZS5 heat setpoint offset	0	ΔF		ZS5HSOFF
ZS OCC TIME OVER	ZS Occ Timed Override				
ZS1 OCC TIME OVER	ZS1 Override time remain	0	min		ZS1OTR
ZS2 OCC TIME OVER	ZS2 Override time remain	0	min		ZS2OTR
ZS3 OCC TIME OVER	ZS3 Override time remain	0	min		ZS3OTR
ZS4 OCC TIME OVER	ZS4 Override time remain	0	min		ZS4OTR
ZS5 OCC TIME OVER	ZS5 Override time remain	0	min		ZS5OTR
ZS MOTION SENSOR	ZS Motion Sensor				
ZS MOTION SENSOR1	ZS Motion Sensor 1	0			ZS1ZM
ZS MOTION SENSOR2	ZS Motion Sensor 2	0			ZS2ZM
ZS MOTION SENSOR3	ZS Motion Sensor 3	0			ZS3ZM
ZS MOTION SENSOR4	ZS Motion Senso4	0			ZS4ZM
ZS MOTION SENSOR5	ZS Motion Sensor 5	0			ZS5ZM

Table F — Outputs Main Menu Layout

DISPLAY TEXT	EXPANDED DISPLAY TEXT	VALUES	UNITS	WRITE STATUS	POINT
OUTPUTS	Outputs Menu				
GENERAL OUTPUTS	General Outputs Menu				
COMMANDED IDF RPM	IDF Commanded RPM	xxxx	RPM		FSPD_RPM
ECON CMD POSITION	Econo Commanded Position	0 to 100	%	Forcible	DAMPCMD
CCH RELAY	CCH Relay 1 State	On/Off			CCHR1
PE1 RELAY	Power Exhaust 1 Relay	On/Off		Forcible	PE1
PE2 RELAY	Power Exhaust 2 Relay	On/Off		Forcible	PE2
ALARM RELAY	Alarm Output Relay State	On/Off		Forcible	ALMOUT
2POS/ERV RELAY	2-Pos Damper/ERV relay	On/Off		Forcible	ERV_2POS
COOLING OUTPUTS	Cooling Outputs Menu				
COMPRESSOR A1	Circuit A Compressor 1	On/Off			COMP_A1
COMPRESSOR A2	Circuit A Compressor 2	On/Off			COMP_A2
COMP A LOADER	Circuit A CMP A1 Loader	On/Off			COMP_ALD
ODF SPEED RELAY	Outdoor Fan Speed Relay	On/Off			OFR
ODF RELAY 2	Outdoor Fan Relay 2	On/Off			OFR2
ODF RELAY 3	Outdoor Fan Relay 3	On/Off			OFR3
ODF ON/OFF RELAY	ODF On/Off Relay	On/Off			ODF_ON
REVERSING VALVE	Rev.Valve Solenoid Cir.A	On/Off			RVS_A
HEATING OUTPUTS	Heating Outputs Menu				
COMPRESSOR A1	Circuit A Compressor 1	On/Off			COMP_A1
COMPRESSOR A2	Circuit A Compressor 2	On/Off			COMP_A2
COMP A LOADER	Circuit A CMP A1 Loader	On/Off			COMP_ALD
ODF RELAY	Outdoor Fan Relay	On/Off			OFR
ODF RELAY 2	Outdoor Fan Relay 2	On/Off			OFR2
ODF RELAY 3	Outdoor Fan Relay 3	On/Off			OFR3
ODF ON/OFF RELAY	ODF On/Off Relay	On/Off			ODF_ON
REVERSING VALVE	Rev.Valve Solenoid Cir.A	On/Off			RVS_A
LIQUID LINE VALVE	Liquid Solenoid Valve	On/Off			LLSV
HEAT 1 RELAY	Heat Stage 1 Relay	On/Off			HEAT_1
HEAT 2 RELAY	Heat Stage 2 Relay	On/Off			HEAT_2

Table G — USB Main Menu Layout

DISPLAY TEXT	EXPANDED DISPLAY TEXT	VALUES	UNITS	WRITE STATUS	POINT
USB	USB Menu				
DATA ACQUISITION	Data Acquisition Menu				
TREND STATUS	USB TREND STATUS	0=IDLE, 1=TRENDING, 2=NO POINTS, 3=USB FULL			TRNDSTAT
TREND DURATION	USB TREND DURATION	0=FULL, 1=ROLLING, 2=LASTWEEK, 3=1 MINUTE, 4=5 MINUTES, 5=15 MINUTES, 6=30 MINUTES, 7=1 HOUR, 8=3 HOURS, 9=8 HOURS, 10=12 HOURS, 11=1 DAY, 12=1.5 DAYS, 13=2 DAYS, 14=3 DAYS, 15=5 DAYS, 16=1 WEEK, 17=2 WEEKS, 18=4 WEEKS		Command	TRNDDUR
TREND RATE	USB TREND RATE	1 to 300		Command	TRNDRATE
TREND POINTS FROM	USB TREND POINTS FROM	0=FILE, 1=LIST		Command	TRNDPNTS
TREND FROM USB FILE?	TREND FROM USB FILE MENU				
TREND FROM PRELIST?	TREND FROM PRELIST MENU				
EQUIP PERFORMANCE	TREND EQUIP PERFORMANCE	On/Off		Command	TRNDEQPR
GEN. INPUT/OUTPUT	TREND GEN INPUTS/OUTPUTS	On/Off		Command	TRNDIO
COOL PERFORMANCE	TREND COOL PERFORMANCE	On/Off		Command	TRNDCLPR
HEAT PERFORMANCE	TREND HEAT PERFORMANCE	On/Off		Command	TRNDHTPR
COOL DIAGNOSTIC	TREND COOLING DIAGNOSTIC	On/Off		Command	TRNDCLDG
IDF DIAGNOSTIC	TREND IDF DIAGNOSTIC	On/Off		Command	TRNDIDF
VENT DIAGNOSTIC	TREND VENTILATION	On/Off		Command	TRNDVENT
TREND GO?	Start USB Trending	Yes/No		Command	TREND_EN
SAVE CONFIGS TO FILE	Save Configuration to file				
SAVE CONFIGS	Make Config Backup File	Start/Stop		Command	DDBCKUP
SAVE CONFIG STATUS	Backup File is ready	0=IDLE, 1=SUCCESS, 2=FAILURE			BACKUP_R
SAVE CONFIGS FROM FILE	Save Configuration from file				
FIND CONFIG FILE	USB Find Restore File	Yes/No		Command	BACKFILE
FILE TRANSFER	File Transfer Menu				
BACKUP SERVICE FILES	BACKUP SERVICE FILES				
UPGRADE SOFTWARE	Upgrade Software Menu				
FIND APPLICATION FILE	USB search for app file	Yes/No		Command	APPFILE

APPENDIX B — SYSTEMVU™ CONTROLLER TEXT POINT REFERENCE

SystemVu Display Name = MODE
SystemVu Text point = MODETEXT
SystemVu Numeric point = SYS_MODE

MODETEXT	SYS_MODE
OFF	1
COOL	2
HEAT	3
VENT	4
TEST	5

SystemVu Display Name = SUB-MODE
SystemVu Text point = SUBMTEXT
SystemVu Numeric point = SUB_MODE

SUBMTEXT	SUB_MODE
NO COOLING	**3**
ECON FREE COOLING	4
UNOCC. FREE COOL	5
MECH. COOLING	6
ECON/MECH COOLING	7
DEHUM/MECH COOLING	8
DEHUMIDIFYING	9
DEHUM PREVENTED	10
COOLING PREVENTED	11
SHUTTING COOL OFF	12
NO HEATING	13
HEATING	14
HEATING PREVENTED	15
SHUTTING HEAT OFF	16
SA TEMPERING	17
DEFROST	18
NO VENT	19
MODE TIMEGUARD	20, 27
SUPPLY FAN ON	21
MANUAL TEST	24
AUTO TEST	25
SHUTTING TEST OFF	26
IDLE - NO DEMAND	28
UNIT DISABLED	29
URGENT SHUTDOWN	30
SAFETY CONTROL	31
STARTING UP	32
PURGING SMOKE	33
PRESSURIZING	34
EVACUATING SMOKE	35

SystemVu Display Name = VENT MODE
SystemVu Text point = VENTTEXT
SystemVu Numeric point = VENTSTAT

VENTTEXT	VENTSTAT
SUPPLY FAN OFF	0
CIRCULATION	1
PRE-OCC PURGE	2
IAQ OVERRIDE	3
MINIMUM POSITION	4
UNDER VENTILATION	5
OVER VENTILATION	6
DCV POSITION	7
FREECOOL POSITION	8
TESTING	9

SystemVu Display Name = DEMAND
SystemVu Text point = SYSDMDT
SystemVu Numeric point = SYS_DMD

SYSDMDT	SYS_DMD
NO DEMAND	0
DEHUM	4, 12
FAN ONLY	8
LOW COOL	17, 25
MED COOL	18, 26
HIGH COOL	19, 27
LOW COOL DEHUM	21, 29
MED COOL DEHUM	22, 30
HIGH COOL DEHUM	23, 31
LOW HEAT	33, 37, 41, 45
HIGH HEAT	35, 39, 43, 47
SERVICE TEST	49
SHUTDOWN	65
SAFETY FAULT	66
EMERGENCY	67
UFC LOW COOL	81
UFC MED COOL	82
UFC HIGH COOL	83
LOW UFC DEHUM	85
MED UFC DEHUM	86
HIGH UFC DEHUM	87
SMOKE PURGE	97
SMOKE PRESSURE	98
SMOKE EVAC	99
SATEMPERING	129, 137

Table H — Mode — Run Status

DISPLAY TEXT	EXPANDED DISPLAY TEXT	VALUES	UNITS	WRITE STATUS	POINT
RUN STATUS	Run Status Menu				
VIEW	View Menu				
MODE	Operating Mode	see Appendix B			MODETEXT
SUBM	Operating Sub-Mode	see Appendix B			SUBMTEXT
S.DMD	System Demand	see Appendix B			SYS_DMDT
LINK	Linkage Active	Yes/No		Forcible	LNK_ACT
OCC	Currently Occupied	Yes/No		Forcible	OCCUPIED
OC.ST	OccupiedStandBY	Yes/No			OCCSTDBY
SAT	Supply Air Temperature	xxx..x	°F		SAT
COOL	Cooling Status Menu				
MC.ON	Mechanical Cool active?	Yes/No			MECHCOOL
MAX.C	Max Allowed Cool Stages	0 to 3		Forcible	MAXCSTGS
REQ.C	Requested Cooling Stages	0 to 3			REQCSTGS
ACT.C	Actual Cool Stage Active	x			ACTCSTGS
TG.A1	Compressor A1 Timeguard	xxx	sec		TIMGD_A1
TG.AL	Comp A1 Loader Timeguard	xxx	sec		TIMG_ALD
FC.ON	Free Cooling active	Yes/No			FREECOOL
REQ.D	Requested Damper Pos	0 to 100	%		REQDAMP
HEAT	Heating Status Menu				
C.SPD	IDF Commanded RPM	xxxx	RPM		FSPD_RPM
HS.TY	Active Type of Heat	0=NONE, 1=MECH ONLY, 2=MECH+1EH, 3=MECH+2EH, 4=ELCTHT1, 5=EH1+EH2, 6=DEFROST			HTSRCTYP
EC.CP	Econo Commanded Position	xxx	%	Forcible	DAMPCMD
H.LOC	All Heat Stages Lockout	Yes/No			ALLHTLOC
DF.A	Defrost Mode Active	Yes/No			DFRSTACT
OK.HT	OK to Run Heat	Yes/No			OKTOHEAT
REQ.H	Requested Heating Stages	x			REQHSTGS
ACT.H	Actual Heat Stage Active	x			ACTHSTGS
MAX.H	Max Allowed Heat Stages	0 to 2		Forcible	MAXHSTGS
TG.H1	Heat Stage 1 Timeguard	xxx	sec		TIMGD_H1
TG.H2	Heat Stage 2 Timeguard	xxx	sec		TIMGD_H2
DF.TR	Defrost Mode Timer	xxxx	sec		DF_TIMER
DF.IR	Defrost Interval Timer	xxxx	sec		DFINT_T
H2.DT	Heat2 delay timer	xxx	sec		H2DLTMR
H1.AV	Heat Stage 1 Available	Yes/No			HT1_AVAL
H2.AV	Heat Stage 2 Available	Yes/No			HT2_AVAL
OK.ST	OK to SupplyAirTempering	Yes/No			OKTOTEMP
ME.H	Mechanical Heating Menu				
MH.ON	Mechanical Heating	Yes/No			MECHT_EN
OD.ST	ODF State	0=OFF, 1=ON, 2=LOW, 3=HIGH			ODFSTATE
TG.A1	Compressor A1 Timeguard	xxx	sec		TIMGD_A1
TG.A2	Compressor A2 Timeguard	xxx	sec		TIMGD_A2
TG.AL	Comp A1 Loader Timeguard	xxx	sec		TIMG_ALD
SA.TR	Supply Air Temp Trend	xxx.x			SATTREND
ST.A1	Compressor A1 strikes	x			A1STRIKE
ST.A2	Compressor A2 Strikes	x			A2STRIKE
RA1.S	Recent Comp A1 Strike	Yes/No			A1STKACT
RA2.S	Recent Comp A2 Strike	Yes/No			A2STKACT
C.LO	Circuit A Locked Out	Yes/No			CIRALOCK
A1.AV	Compressor A1 Available	Yes/No			CA1_AVAL
A2.AV	Compressor A2 Available	Yes/No			CA2_AVAL
A1.LO	Compressor A1 Locked Out	Yes/No			CA1_LOCK
A2.LO	Compressor A2 Locked Out	Yes/No			CA2_LOCK

Table H — Mode — Run Status (cont)

DISPLAY TEXT	EXPANDED DISPLAY TEXT	VALUES	UNITS	WRITE STATUS	POINT
VENT	Ventilation Status Menu				
VENT	Ventilation Status	see Appendix B			VENTTEXT
EC.MP	Min Position in Effect	0 to 100	%	Forcible	MIN_POS
OCC	Currently Occupied	Yes/No		Forcible	OCCUPIED
OC.ST	OccupiedStandBY	Yes/No			OCCSTDBY
A.IO	ASSIGNED INPUTS/OUPUTS				
AI06	Assigned AI06 Function	0=None, 1=IAQ, 2=OARH, 3=RARH, 4=OAQ, 5=SPRH, 6=OACFM			MBBAI06F
AI07	Assigned AI07 Function	0=None, 1=IAQ, 2=OARH, 3=RARH, 4=OAQ, 5=SPRH, 6=OACFM			MBBAI07F
AI08	Assigned AI08 Function	0=None, 1=IAQ, 2=OARH, 3=RARH, 4=OAQ, 5=SPRH, 6=OACFM			MBBAI08F
DI02	Assigned DI02 Function	0=None, 1=COFS, 2=REMOCC, 3=REMOFF, 4=FILTER, 5=ENTHALPY, 6=GEN STAT, 7=HUMSTAT, 8=IAQOVRD, 9=SMK EVAC, 10=SMK PRESS, 11=SMK PURGE, 12=FIREDOWN, 13=FANSTATUS, 14=PHASEMON			MBBDI02F
DI03	Assigned DI03 Function	0=None, 1=COFS, 2=REMOCC, 3=REMOFF, 4=FILTER, 5=ENTHALPY, 6=GEN STAT, 7=HUMSTAT, 8=IAQOVRD, 9=SMK EVAC, 10=SMK PRESS, 11=SMK PURGE, 12=FIREDOWN, 13=FANSTATUS, 14=PHASEMON			MBBDI03F
DI.Y3	Assigned MBB Y3 Function	0=None, 1=COFS, 2=REMOCC, 3=REMOFF, 4=FILTER, 5=ENTHALPY, 6=GEN STAT, 7=HUMSTAT, 8=IAQOVRD, 9=SMK EVAC, 10=SMK PRESS, 11=SMK PURGE, 12=FIREDOWN, 13=FANSTATUS, 14=PHASEMON			MBBDI09F

Table H — Mode — Run Status (cont)

DISPLAY TEXT	EXPANDED DISPLAY TEXT	VALUES	UNITS	WRITE STATUS	POINT
DI12	Assigned DI12 Function	0=None, 1=COFS, 2=REMOCC, 3=REMOFF, 4=FILTER, 5=ENTHALPY, 6=GEN STAT, 7=HUMSTAT, 8=IAQOVRD, 9=SMK EVAC, 10=SMK PRESS, 11=SMK PURGE, 12=FIREDOWN, 13=FANSTATUS, 14=PHASEMON			MBBDI12F
DI13	Assigned DI13 Function	0=None, 1=COFS, 2=REMOCC, 3=REMOFF, 4=FILTER, 5=ENTHALPY, 6=GEN STAT, 7=HUMSTAT, 8=IAQOVRD, 9=SMK EVAC, 10=SMK PRESS, 11=SMK PURGE, 12=FIREDOWN, 13=FANSTATUS, 14=PHASEMON			MBBDI13F
DI14	Assigned DI14 Function	0=None, 1=COFS, 2=REMOCC, 3=REMOFF, 4=FILTER, 5=ENTHALPY, 6=GEN STAT, 7=HUMSTAT, 8=IAQOVRD, 9=SMK EVAC, 10=SMK PRESS, 11=SMK PURGE, 12=FIREDOWN, 13=FANSTATUS, 14=PHASEMON			MBBDI14F
RY06	Assigned Rly 06 Function	0=None, 1=ALM Relay, 2=PE1, 3=PE2			MBBRY06F
RY11	Assigned Rly 11 Function	0=None, 1=ALM Relay, 2=PE1, 3=PE2			MBBRY11F
VERS	Versions Menu				
MODL	Equipment Model number	xxxxxxxxxxxxxxxxxx			EQ_MOD
SERL	Equipment Serial number	xxxxxxxxxx			EQ_SER
SW	Application SW Version	text			FW_CESR
BOOT	Bootloader SW Version	text			BL_CESR

Table I — Mode — Service Test

DISPLAY TEXT	EXPANDED DISPLAY TEXT	VALUES	UNITS	WRITE STATUS	POINT
SERVICE TEST	Service Test Menu				
TEST	Service Test Mode Enable	On/Off			
INDP	INDEPENDENT TEST MENU				
DAMP	Economizer Position Test	0 to 100	%		S_DAMPER
BMP1	Compressor Bump A1 Test	On/Off			S_BMPA1
BMP2	Compressor Bump A2 Test	On/Off			S_BMPA2
S.RV	Rev.Val. Sole. Cir.A Tst	On/Off			S_RVS_A
S.LL	LiqLine Solenoid Test	On/Off			S_LLSV
CCH1	Crankcase Heater 1 test	On/Off			S_CCHR1
ALRM	Alarm Output Relay Test	On/Off			S_ALARM
PE1	Power Exhaust 1 Test	On/Off			S_PE_1
PE2	Power Exhaust 2 Test	On/Off			S_PE_2
2P.EV	2Position/ERV Relay Test	On/Off			S_ERV2P
E.CAL	Econ Damper Calibration	On/Off			S_ECOCAL
FAN	FAN TESTS				
IDFS	Indoor Fan Speed Test	0 to 100	%		S_IDFSPD
IF.SP	Converted IDF Speed	0 to 5000	RPM		IFRPMTST
IF.TR	IDF Manual Transition	Yes/No			S_IDFTRN
T.ODF	ODF On/Off Relay Test	On/Off			S_ODFON
T.OFR	ODF Speed Relay Test	On/Off			S_OFRSPD
OFR2	ODF Relay2 Test	On/Off			S_OFR2
OFR3	ODF Relay3 Test	On/Off			S_OFR3
COOL	Cooling Test Menu				
CL.A1	Cooling W/Comp.A1 Test	On/Off			S_COOLA1
CL.AL	Cooling W/Comp.ALD Test	On/Off			S_COLALD
IDFS	Indoor Fan Speed Test	0 to 100	%		S_IDFSPD
T.ODF	ODF On/Off Relay Test	On/Off			S_ODFON
OFR	ODF Speed Relay Test	On/Off			S_OFRSPD
OFR2	ODF Relay2 Test	On/Off			S_OFR2
OFR3	ODF Relay3 Test	On/Off			S_OFR3
HEAT	Heating Test Menu				
HT.1	Heating Stage 1 Test	On/Off			S_HEAT1
HT.2	Heating Stage 2 Test	On/Off			S_HEAT2
T.MHT	Mechanical Heating Test	On/Off			S_MECHT
T.DFR	Defrost Test	On/Off			S_DFRST
IDFS	Indoor Fan Speed Test	0 to 100	%		S_IDFSPD

Table J — Mode — Temperatures

ITEM	EXPANSION	VALUES	UNITS	WRITE STATUS	POINT
TEMPERATURES	Temperature Menu				
SAT	Supply Air Temperature	xxx..x	°F		SAT
OAT	Outdoor Air Temperature	xxx.x	°F	Forcible	OAT
RAT	Return Air Temperature	xxx.x	°F	Forcible	RAT
SPT	Space Temperature	xxx.x	°F	Forcible	SPACE_T
SPTO	Space Temperature Offset	xx.x	ΔF	Forcible	SPTO
SST.A	Cir.A Sat.Suction Temp	xxx.x	°F		SST_A
SDT.A	Cir.A Sat.Discharge Temp	xxx.x	°F		SDT_A
FST	Fan Supply Air Temp	xxx.x	°F		FST

Table K — Mode — Pressures

ITEM	EXPANSION	VALUES	UNITS	WRITE STATUS	POINT
PRESSURES	Pressures Menu				
SSP.A	Cir. A Suction Pressure	xxx.x	PSI		SSP_A
SDP.A	Cir. A Discharge Pressure	xxx.x	PSI		SDP_A
PR.A	Circuit A Pressure Ratio	xx.xx			CIRA_PR
BARP	Barometric Pressure	xx.xx		Forcible	BARP

Table L — Mode — Setpoints

ITEM	EXPANSION	VALUES	UNITS	DEFAULT	POINT
SETPOINTS	Setpoint Menu				
OCSP	Occupied Cool Setpoint	55 to 80	°F	78	OCSP
OHSP	Occupied Heat Setpoint	55 to 80	°F	68	OHSP
UCSP	Unoccupied Cool Setpoint	65 to 95	°F	85	UCSP
UHSP	Unoccupied Heat Setpoint	40 to 80	°F	60	UHSP
GAP	Heat-Cool Setpoint Gap	2 to 10	°F	5	HCSP_GAP
STO.R	SPT Offset Range (+/-)	0 to 5	°F	5	SPTO_RNG
RH.OS	Occupied SPRH Setpoint	0 to 100	%	50	SPRH_OSP
RH.US	Unoccupied SPRH Setpoint	0 to 100	%	80	SPRH_USP
RH.DB	Space RH Deadband	2 to 20	%	8	SPRH_DB

Table M — Mode — Inputs

ITEM	EXPANSION	VALUES	UNITS	WRITE STATUS	POINT
INPUTS	Inputs Menu				
STAT	Thermostat Inputs menu				
G	Thermostat G Input	On/Off		Forcible	G
Y1	Thermostat Y1 Input	On/Off		Forcible	Y1
Y2	Thermostat Y2 Input	On/Off		Forcible	Y2
W1	Thermostat W1 Input	On/Off		Forcible	W1
W2	Thermostat W2 Input	On/Off		Forcible	W2
SW	Switch Inputs Menu				
DF.SW	Defrost Switch	Open/Close			DFRST_SW
HPS.A	Cir.A High Pressure Sw	Open/Close			CIRA_HPS
F.LSM	IDF Manual Limit Switch	Open/Close			IDF_LSM
HUMD	Humidistat Input	On/Off		Forcible	HUMDSTAT
FDWN	Fire Shutdown Switch	Alarm/Normal		Forcible	FIREDOWN
COFS	COFS Switch State	High/Low		Forcible	COFS
PMR	Phase Monitor Switch	Alarm/Normal			PMR_STAT
FIL.S	Filter Status Switch	Dirty/Clean		Forcible	FILTSTAT
RM.OC	Remote Occupancy Switch	On/Off		Forcible	REMOCC
R.OFF	Remote Shutdown Switch	On/Off		Forcible	REMSHUT
FAN.S	Fan Status Switch	On/Off			FAN_STAT
GEN.S	General Status Switch	Alarm/Normal		Forcible	GENSTAT
IAQ.O	IAQ Override Switch	On/Off		Forcible	IAQ_OVRS
ENTH	Enthalpy Switch	High/Low		Forcible	ENTH_SW
PURG	Smoke Purge Switch	On/Off		Forcible	PURGE
PRES	Smoke Pressure Switch	On/Off		Forcible	PRESSURE
EVAC	Smoke Evacuation Switch	On/Off		Forcible	EVAC
LK.DT	Refrig Dissipation Input	Open/Close			LEAK_DTC
AIS	ANALOG Inputs Menu				
EC.AP	Damper Actual Position	0 to 100	%		DAMPPOS
SPRH	Space Relative Humidity	0 to 100	%	Forcible	SPRH
OARH	OA Relative Humidity	0 to 100	%	Forcible	OARH
RARH	RA Relative Humidity	0 to 100	%	Forcible	RARH
IAQ	Indoor Air Quality Level	xxxx	PPM	Forcible	IAQ
OAQ	OA Quality Level	xxxx	PPM	Forcible	OAQ
OCFM	Outdoor Air in CFM	0 to 8000	CFM	Forcible	OACFM
GEN	General Inputs Menu				
FT.RM	Filter hour remaining	xxxx	hrs		FILTLEFT
R.FLT	Reset Filter Timer	Yes/No			RESETFLT
OAE	Outdoor Air Enthalpy	-9.6 to 334.2		Forcible	OA_ENTH
RAE	Return Air Enthalpy	-9.6 to 334.2		Forcible	RA_ENTH
DF.AQ	Differential Air Quality	-5000 to 5000	PPM		AQ_DIFF

Table N — Mode — Outputs

ITEM	EXPANSION	VALUES	UNITS	WRITE STATUS	POINT
OUTPUTS	Outputs Menu				
GEN	General Outputs Menu				
C.SPD	IDF Commanded RPM	0 to 3000	RPM		FSPD_RPM
EC.CP	Econo Commanded Position	0 to 100	%	Forcible	DAMPCMD
CCH	CCH Relay 1 State	On/Off			CCHR1
PE.1	Power Exhaust 1 Relay	On/Off		Forcible	PE1
PE.2	Power Exhaust 2 Relay	On/Off		Forcible	PE2
ALRM	Alarm Output Relay State	On/Off		Forcible	ALMOUT
EV2P	2-Pos Damper/ERV relay	On/Off			ERV_2POS
COOL	Cooling Outputs Menu				
C.A1	Circuit A Compressor 1	On/Off			COMP_A1
C.A2	Circuit A Compressor 2	On/Off			COMP_A2
C.AL	Circuit A CMP A1 Loader	On/Off			COMP_ALD
OFR	Outdoor Fan Speed Relay	On/Off			OFR
OFR2	Outdoor Fan Relay 2	On/Off			OFR2
OFR3	Outdoor Fan Relay 3	On/Off			OFR3
OF.R2	ODF On/Off Relay	On/Off			ODF_ON
RVS.A	Rev.Valve Solenoid Cir.A	On/Off			RVS_A
HEAT	Heating Outputs Menu				
C.A1	Circuit A Compressor 1	On/Off			COMP_A1
C.A2	Circuit A Compressor 2	On/Off			COMP_A2
C.AL	Circuit A CMP A1 Loader	On/Off			COMP_ALD
OF.R	Outdoor Fan Speed Relay	On/Off			OFR
OFR2	Outdoor Fan Relay 2	On/Off			OFR2
OFR3	Outdoor Fan Relay 3	On/Off			OFR3
OF.R2	ODF On/Off Relay	On/Off			ODF_ON
LL.SV	Liquid Solenoid Valve	On/Off			LLSV
RVS.A	Rev.Valve Solenoid Cir.A	On/Off			RVS_A
HT.1	Heat Stage 1 Relay	On/Off			HEAT_1
HT.2	Heat Stage 2 Relay	On/Off			HEAT_2

Table O — Mode — Configurations

ITEM	EXPANSION	VALUES	UNITS	DEFAULTS	POINT
CONFIGURATION	Configuration				
GEN	GENERAL				
S.DLY	Unit Startup Delay	10 to 600	sec	30	STARTDLY
U.CTL	Unit Control Type	0=TSTAT, 1=SPACE SEN, 2=RAT SEN		0=TSTAT	CTRLTYPE
T.CTL	Thermostat Hardware Type	0=CONV 2C2H, 1=DIGI 2C2H, 2=CONV 3C2H, 3=DIGI 3C2H		0=CONV 2C2H	STATTYPE
VNT.C	Ventilation Method	0=NONE, 1=ECON, 2=2POS DMPR, 3=ERV, 4=ECON ERV		0: No FIOP 1: Economizer FIOP 2: Two Position Damper FIOP	VENTTYPE
FT.TM	Change Filter Timer	0 to 9999	hrs	0	FILTLIFE
T.TO	Test Inactivity Time Out	0=Disabled, 1=30 minutes, 2=1 hour, 3=2 hours, 4=4 hours, 5=8 hours, 6=12 hours		4	TEST_ITO
CA.LO	Circuit A Lockout Temp	-20 to 75	°F	40: no FIOP 0: Low Ambient FIOP 0: Size 12	OATLCMPA
D.INV	Min Time BTWN Defrosts	30 to 120	min	60	MINDFINT
N.HTR	Number Of Heating Stages	0 to 2		1	NUMHSTGS
HT.LO	Heating Lockout Temp	40 to 125	°F	75	OATLHEAT
MH.LO	Mech Heat Lockout Temp	-30 to 40	°F	-8	OATLMECH

Table O — Mode — Configurations (cont)

ITEM	EXPANSION	VALUES	UNITS	DEFAULTS	POINT
I.FAN	INDOOR FAN				
S.MAX	IDF Maximum Fan Speed	0 to 100	%	100	SPEEDMAX
S.VNT	IDF Vent Speed-RPM	0 to 3000	RPM	1281: Size 04 Medium Static Fan 1457: Size 04 High Static Fan 1269: Size 05 Medium Static Fan 1439: Size 05 High Static Fan 230v 1 ph 1556: Size 05 High Static Fan 230v 3ph, 460v, 575v 1398: Size 06 Medium Static Fan 1556: Size 06 High Static Fan 230v 1 ph 1659: Size 06 High Static Fan 230v 3ph, 460v, 575v 1302: FEQ 07 Medium Static Fan 1460: FEQ 07 High Static Fan 780: FEQ 08-12 Std/Med Static Fan 858: FEQ 08-12 High Static Fan 936: Size 17-24 Std/Med Static Fan 1030: Size 17-24 High Static Fan 858: FEQ 14 1030: FEQ 28 936: GEQ 07-12 Std/Med Static 1030: GEQ 07-12 High Static	RPM_VENT
S.HT	IDF Heat Speed-RPM	0 to 3000	RPM	same as S.HCL	RPM_HEAT
S.HCL	IDF High Cool Speed-RPM	0 to 3000	RPM	1708: Size 04 Medium Static Fan 1942: Size 04 High Static Fan 1693: Size 05 Medium Static Fan 1919: Size 05 High Static Fan 230v 1 ph 2075: Size 05 High Static Fan 230v 3ph, 460v, 575v 1864: Size 06 Medium Static Fan 2075: Size 06 High Static Fan 230v 1 ph 2212: Size 06 High Static Fan 230v 3ph, 460v, 575v 1973: FEQ 07 Medium Static Fan 2212: Size 07 High Static Fan 1560: Size 08-12, 17-24 Std/Med Static Fan 1716: Size 08-12, 17-24 High Static Fan 1716: Size 14 and 28 1560: GEQ 07-12 Std/Med Static 1716: GEQ 07-12 High Static	RPM_HCL
S.FCL	IDF Free Cool Speed-RPM	0 to 3000	RPM	same as S.VNT	RPM_FCL
ECON	ECONOMIZER				
VNT.C	Ventilation Method	0=NONE, 1=ECON, 2=2POS DMPR, 3=ERV, 4=ECON ERV		0: No FIOP 1: Economizer FIOP 2: Two Position Damper FIOP	VENTTYPE
FC.MX	Free Cooling Max OAT	0 to 90	°F	65	MAXFREET
EC.MX	Econ Max Damper Position	0 to 100	%	100	DAMPMAX
MIN.P	MINIMUM POSITION CONFIGS				
MP.MX	Econ Min at Max Fanspeed	0 to 100	%	30	MINP_MAX
MP.S1	Min Pos - User Speed 1	0 to 100	%	0	MP_USPD1
MP.D1	Min Pos - User Pos 1	0 to 100	%	0	MP_UPOS1
MP.S2	Min Pos - User Speed 2	0 to 100	%	0	MP_USPD2
MP.D2	Min Pos - User Pos 2	0 to 100	%	0	MP_UPOS2
MP.S3	Min Pos - User Speed 3	0 to 100	%	0	MP_USPD3
MP.D3	Min Pos - User Pos 3	0 to 100	%	0	MP_UPOS3
NET	NETWORK SETTINGS				
BAS	BAS Protocol Select	0=NONE, 1=CCN, 2=BACNET		0=NONE	BMS_CFG
NW.TO	Network Input Timeout	0 to 600	min	30	NETINTO
CCN	CCN				
CCN.B	CCN Bus number	0 to 239		0	CCNBUS
CCN.A	CCN Element Number	1 to 239		1	CCNADD
BAUD	CCN Baud Rate	0=9600, 1=19200, 2=38400		2=38400	BAUDENUM

Table O — Mode — Configurations (cont)

ITEM	EXPANSION	VALUES	UNITS	DEFAULTS	POINT
BNET	BACNET				
MAC	BACnet Device Macaddress	1 to 127		1	BAC_MAC
BAUD	BACnet BMS baud rate	0=9600, 1=19200, 2=38400, 3=57600, 4=76800, 5=115200		4=76800	BAC_BAUD
AUID	ALC Auto Id Scheme	Yes/No		Yes	AUID
B.AID	BACnet ID Auto ID	Yes/No		Yes	BAC_AUID
ID	BACnet ID Number	0 to 4194302		1610101	BAC_ID
DISP	DISPLAY SETTINGS				
METR	Metric Display	Yes/No		No	DISPUNIT
LANG	Display Language Select	0=English, 1=Spanish, 2=French, 3=Portuguese		0=English	LANGUAGE
PROT	User Password Protection	Enable/Disable		Enable	PASS_EBL
PSWD	User Password	0 to 9999		1111	PASSWORD

Table P — Mode — Time Clock

ITEM	EXPANSION	RANGE	UNITS	DEFAULT	POINT
TIME CLOCK					
TIME	Clock Hour and Minute	xx:xx	hh.mm		
MNTH	Month of Year	1=JANUARY, 2=FEBRUARY, 3=MARCH, 4=APRIL, 5=MAY, 6=JUNE, 7=JULY, 8=AUGUST, 9=SEPTEMBER, 10=OCTOBER, 11=NOVEMBER, 12=DECEMBER			MOY
DOM	Day Of month	1 to 31			DOM
YEAR	Year	2000 to 9999			YOC_DISP
DAY	Day Of week	1=MONDAY, 2=TUESDAY, 3=WEDNESDAY, 4=THURSDAY, 5=FRIDAY, 6=SATURDAY, 7=SUNDAY			dow
DST.A	DST currently active	Yes/No			DST_ACTV
DST	Daylight Savings Config				
DST	DST allowed?	Enable/Disable		Enable	DST_CFG
STR.M	DST Start Month	1=JANUARY, 2=FEBRUARY, 3=MARCH, 4=APRIL, 5=MAY, 6=JUNE, 7=JULY, 8=AUGUST, 9=SEPTEMBER, 10=OCTOBER, 11=NOVEMBER, 12=DECEMBER		3	STARTM
STR.W	DST Start Week	1 to 5		2	STARTW
STR.D	DST Start Day	1=MONDAY, 2=TUESDAY, 3=WEDNESDAY, 4=THURSDAY, 5=FRIDAY, 6=SATURDAY, 7=SUNDAY		7	STARTD
M.ADD	DST Minutes to Add	0 to 90	min	60	MINADD

Table P — Mode — Time Clock (cont)

ITEM	EXPANSION	RANGE	UNITS	DEFAULT	POINT
STP.M	DST Stop Month	1=JANUARY, 2=FEBRUARY, 3=MARCH, 4=APRIL, 5=MAY, 6=JUNE, 7=JULY, 8=AUGUST, 9=SEPTEMBER, 10=OCTOBER, 11=NOVEMBER, 12=DECEMBER		11	STOPM
STP.W	DST Stop Week	1 to 5		1	STOPW
STP.D	DST Stop Day	1=MONDAY, 2=TUESDAY, 3=WEDNESDAY, 4=THURSDAY, 5=FRIDAY, 6=SATURDAY, 7=SUNDAY		7	STOPD
M.SUB	DST Minutes to Subtract	0 to 90	min	60	MINSUB
TOD	Time in day to start DST	0 to 600	min	120	DST_TOD
SCHD	Schedules Adjust Menu				
SCH.N	CCN Schedule Number	0=Always Occupied, 1-64=Local Schedule, 65-99=Global Schedule	n/a	0	SCHEDNUM
OV.TL	Timed Override Duration	0 to 4	hours	4	OTL_CFG
MON	Mon Schedule Adjust Menu				
OC.x	Monday Occupied x	00:00 to 24:00 or None	HH:MM	None	MO_OC1 - MO_OC8
UOC.x	Monday Unoccupied x	00:00 to 24:00 or None	HH:MM	None	MO_UNOC1 - MO_UNOC8
TUE	Tue Schedule Adjust Menu				
OC.x	Tuesday Occupied x	00:00 to 24:00 or None	HH:MM	None	TU_OC1 - TU_OC8
UOC.x	Tuesday Unoccupied x	00:00 to 24:00 or None	HH:MM	None	TU_UNOC1 - TU_UNOC8
WED	Wed Schedule Adjust Menu				
OC.x	Wednesday Occupied x	00:00 to 24:00 or None	HH:MM	None	WE_OC1 - WE_OC8
UOC.x	Wednesday Unoccupied x	00:00 to 24:00 or None	HH:MM	None	WE_UNOC1 - WE_UNOC8
THU	Thu Schedule Adjust Menu				
OC.x	Thursday Occupied x	00:00 to 24:00 or None	HH:MM	None	TH_OC1 - TH_OC8
UOC.x	Thursday Unoccupied x	00:00 to 24:00 or None	HH:MM	None	TH_UNOC1 - TH_UNOC8
FRI	Fri Schedule Adjust Menu				
OC.x	Friday Occupied x	00:00 to 24:00 or None	HH:MM	None	FR_OC1 - FR_OC8
UOC.x	Friday Unoccupied x	00:00 to 24:00 or None	HH:MM	None	FR_UNOC1 - FR_UNOC8
SAT	Sat Schedule Adjust Menu				
OC.x	Saturday Occupied x	00:00 to 24:00 or None	HH:MM	None	SA_OC1 - SA_OC8
UOC.x	Saturday Unoccupied x	00:00 to 24:00 or None	HH:MM	None	SA_UNOC1 - SA_UNOC8
SUN	Sun Schedule Adjust Menu				
OC.x	Sunday Occupied x	00:00 to 24:00 or None	HH:MM	None	SU_OC1 - SU_OC8
UOC.x	Sunday Unoccupied x	00:00 to 24:00 or None	HH:MM	None	SU_UNOC1 - SU_UNOC8
HOL	Hol Schedule Adjust Menu				
OC.x	Holiday Occupied x	00:00 to 24:00 or None	HH:MM	None	HD_OC1 - HD_OC8
UOC.x	Holiday Unoccupied x	00:00 to 24:00 or None	HH:MM	None	HD_UNOC1 - HD_UNOC8
(repeat up to x=8 Periods)					
HLDY	Holiday adjustment Menu				
HOL.G	Accept Global Holidays?	Yes/No		No	HOLIDAYT
HL.TY	Today Is A Holiday	Yes/No			HOLTODAY
HL.TW	Tomorrow Is A Holiday	Yes/No			HOL_TMRW
HO.xx	Holiday adjustment Menu				
LEN	Holiday Duration (days)	0 to 99		0	HD01LEN - HD30LEN
DAY	Holiday Start Day	0 to 31		0	HD01STDY - HD30STDY
MON	Holiday Start Month	0 to 12=January to December		0	HD01STMN - HD30STMN
(repeat up to xx=30 Holidays)					

Table Q — Mode — Operating Modes

ITEM	EXPANSION	RANGE	UNITS	WRITE STATUS	POINT
OPERATING MODES	Operating Modes Menu				
MODE	Operating Mode	see Appendix B			MODETEXT
SUBM	Operating Sub-Mode	see Appendix B			SUBMTEXT
S.DMD	System Demand	see Appendix B			SYS_DMDT
LINK	Linkage Active	Yes/No		Forcible	LNK_ACT
CLTG	Cool Mode Select T.guard	xxx	sec		COOLMSTG
HTTG	Heat Mode Select T.guard	xxx	sec		HEATMSTG

Table R — Mode — Alarms

ITEM	EXPANSION	RANGE	DEFAULT	POINT
ALARMS				
CURR	Curr Active Alarm Menu			
alarm#	text string			ALARM01C - ALARM25C
(repeat up to 25 times)				
HIST	History Menu			
alarm#	alarm# - mm/dd/yy-hh.mm- text string			ALHIS001 - ALHIS050
(repeat up to 50 times)				
R.CUR	Reset All Current Alarms	Yes/No	Yes	ALRESET
R.HIS	Alarm Reset History Menu			
ARxx	mm/dd/yy, hh:mm:ss			ALMRES00 - ALMRES19
(repeat up to 20 times)				

APPENDIX D — SYSTEMVU™ CONTROLLER CCN TABLES

Table S — Status Display Tables

TABLE	DISPLAY NAME	VALUES	UNITS	POINT NAME	WRITE STATUS
UINPUT					
	Supply Air Temperature	xxx..x	°F	SAT	
	Outdoor Air Temperature	xxx.x	°F	OAT	Forcible
	Return Air Temperature	xxx.x	°F	RAT	Forcible
	Space Temperature	xxx.x	°F	SPACE_T	Forcible
	Space Temperature Offset	xx.x	^F	SPTO	Forcible
	Fan Supply Air Temp	xxx.x	°F	FST	
	Cir.A Sat.Suction Temp	xxx.x	°F	SST_A	
	Cir.A Sat.Discharge Temp	xxx.x	°F	SDT_A	
	Cir.A Suction Pressure	xxx.x	PSI	SSP_A	
	Cir.A Discharge Pressure	xxx.x	PSI	SDP_A	
	Thermostat G Input	On/Off		G	Forcible
	Thermostat Y1 Input	On/Off		Y1	Forcible
	Thermostat Y2 Input	On/Off		Y2	Forcible
	Thermostat W1 Input	On/Off		W1	Forcible
	Thermostat W2 Input	On/Off		W2	Forcible
	Defrost Switch	Open/Close		DFRST_SW	
	Humidistat Input	On/Off		HUMDSTAT	Forcible
	IDF Manual Limit Switch	Open/Close		IDF_LSM	
	Cir.A High Pressure Sw	Open/Close		CIRA_HPS	
	Fire Shutdown Switch	Alarm/Normal		FIREDOWN	Forcible
	COFS Switch State	High/Low		COFS	Forcible
	Filter Status Switch	Dirty/Clean		FILTSTAT	Forcible
	Phase Monitor Switch	Alarm/Normal		PMR_STAT	
	Fan Status Switch	On/Off		FAN_STAT	
	Remote Occupancy Switch	On/Off		REMOCC	Forcible
	Remote Shutdown Switch	On/Off		REMSHUT	Forcible
	General Status Switch	Alarm/Normal		GENSTAT	Forcible
	IAQ Override Switch	On/Off		IAQ_OVRS	Forcible
	Enthalpy Switch	High/Low		ENTH_SW	Forcible
	Smoke Purge Switch	On/Off		PURGE	Forcible
	Smoke Pressure Switch	On/Off		PRESSURE	Forcible
	Smoke Evacuation Switch	On/Off		EVAC	Forcible
	Damper Actual Position	0 to 100	%	DAMPPOS	
	Space Relative Humidity	0 to 100	%	SPRH	Forcible
	OA Relative Humidity	0 to 100	%	OARH	Forcible
	RA Relative Humidity	0 to 100	%	RARH	Forcible
	Indoor Air Quality Level	xxxx	PPM	IAQ	Forcible
	OA Quality Level	xxxx	PPM	OAQ	Forcible
	Outdoor Air in CFM	0 to 8000	CFM	OACFM	Forcible
	Refrig Dissipation Input	Open/Close		LEAK_DTC	
UOUTPUT					
	IDF Commanded RPM	0 to 3000	RPM	FSPD_RPM	
	Econo Commanded Position	0 to 100	%	DAMPCMD	Forcible
	CCH Relay 1 State	On/Off		CCHR1	
	Power Exhaust 1 Relay	On/Off		PE1	Forcible
	Power Exhaust 2 Relay	On/Off		PE2	Forcible
	Alarm Output Relay State	On/Off		ALMOUT	Forcible
	2-Pos Damper/ERV relay	On/Off		ERV_2POS	
	Circuit A Compressor 1	On/Off		COMP_A1	
	Circuit A Compressor 2	On/Off		COMP_A2	
	Circuit A CMP A1 Loader	On/Off		COMP_ALD	
	ODF On/Off Relay	On/Off		ODF_ON	
	Outdoor Fan Speed Relay	On/Off		OFR	
	Outdoor Fan Relay 2	On/Off		OFR2	
	Outdoor Fan Relay 3	On/Off		OFR3	
	Heat Stage 1 Relay	On/Off		HEAT_1	
	Heat Stage 2 Relay	On/Off		HEAT_2	
	Rev.Valve Solenoid Cir.A	On/Off		RVS_A	
	Liquid Solenoid Valve	On/Off		LLSV	

Table S — Status Display Tables (cont)

TABLE	DISPLAY NAME	VALUES	UNITS	POINT NAME	WRITE STATUS
GENDISP					
	Circuit A Pressure Ratio	xx.xx		CIRA_PR	
	Barometric Pressure	xx.xx	"Hg	BARP	Forcible
	Filter hour remaining	xxxx	hrs	FILTLEFT	
	Reset Filter Timer	Yes/No		RESETFLT	Writable
	Outdoor Air Enthalpy	-9.6 to 334.2	BTU_LB	OA_ENTH	Forcible
	Return Air Enthalpy	-9.6 to 334.2	BTU_LB	RA_ENTH	Forcible
	Differential Air Quality	-5000 to 5000	PPM	AQ_DIFF	
	DST currently active	Yes/No		DST_ACTV	
	Network OAT Value	xxx.x	°F	OAT_NET	Forcible
	Network Return Air Temp	xxx.x	°F	RAT_NET	Forcible
	Network Space Temp Value	xxx.x	°F	SPT_NET	Forcible
	Network SPRH Value	0 to 100	%	SPRH_NET	Forcible
	Network OARH Value	0 to 100	%	OARH_NET	Forcible
	Network RARH Value	0 to 100	%	RARH_NET	Forcible
	Network IAQ Value	xxxx	PPM	IAQ_NET	Forcible
	Network OAQ Value	xxxx	PPM	OAQ_NET	Forcible
	Network OACFM Value	xxx.x	CFM	OCFM_NET	Forcible
MODEDISP					
	System Mode	see Appendix B		SYSMODE	
	Running Mode Operation	see Appendix B		SUB_MODE	
	Ventilation Status	see Appendix B		VENTSTAT	
	System Demand	0 to 99		SYS_DMD	
	Currently Occupied	Yes/No		OCCUPIED	Forcible
	OccupiedStandBY	Yes/No			OCCSTDBY
	Linkage Active	Yes/No		LNK_ACT	
	Unocc Free Cool Active	Yes/No		UFC_ACT	
	Temp Compensate Start On	Yes/No		TCS_ACT	
	Cool Setpoint in Effect	xx.x	°F	CSP_EFF	
	Heat Setpoint in Effect	xx.x	°F	HSP_EFF	
	Effective Demand Temp	xxx.x	°F	TEMP_EFF	
	Cool Demand Limiting	Yes/No		CDMLMOFF	
	Cool Demand limit offset	0	°F	COOLDLMO	
	Heat Demand Limiting	0		HDMLMOFF	
	Heat Demand Limit offset	0	°F	HEATDLMO	
	Cool demand Limit Level	0 to 3		CDMDLLEV	
	Heat demand Limit Level	0 to 3		HDMDLLEV	

Table S — Status Display Tables (cont)

TABLE	DISPLAY NAME	VALUES	UNITS	POINT NAME	WRITE STATUS
COOLDISP					
	OK to Use Free Cooling?	Yes/No		OKFREECL	
	Free Cooling active	Yes/No		FREECOOL	
	Free Cooling SAT Setpnt	xx.x	°F	FC_SATSP	
	Econo Commanded Position	0 to 100	%	DAMPCMD	Forcible
	IDF Commanded RPM	0 to 3000	RPM	FSPD_RPM	
	Ok to use compressors?	Yes/No		OKMECHCL	
	Mechanical Cool active?	Yes/No		MECHCOOL	
	Max Allowed Cool Stages	0 to 3		MAXCSTGS	Forcible
	Requested Cooling Stages	0 to 3		REQCSTGS	
	Actual Cool Stage Active	x		ACTCSTGS	
	Circuit A Compressor 1	On/Off		COMP_A1	
	Circuit A Compressor 2	On/Off		COMP_A2	
	Circuit A CMP A1 Loader	On/Off		COMP_ALD	
	Rev.Valve Solenoid Cir.A	On/Off		RVS_A	
	Compressor A1 Timeguard	xxx	sec	TIMGD_A1	
	Comp A1 Loader Timeguard	xxx	sec	TIMG_ALD	
	Compressor A2 Timeguard	xxx	sec	TIMGD_A2	
	Ok to use Fan Dehum	Yes/No		OKTOFBD	
	Cir.A Sat.Discharge Temp	xxx.x	°F	SDT_A	
	Cir.A Sat.Suction Temp	xxx.x	°F	SST_A	
	Cir.A Discharge Pressure	xxx.x	PSI	SDP_A	
	Cir.A Suction Pressure	xxx.x	PSI	SSP_A	
	Circuit A Pressure Ratio	xx.xx		CIRA_PR	
	Cir.A High Pressure Sw	Open/Close		CIRA_HPS	
	Supply Air Temperature	xxx..x	°F	SAT	
	Outdoor Air Temperature	xxx.x	°F	OAT	Forcible
	ODF State	0=OFF, 1=ON, 2=LOW, 3=HIGH		ODFSTATE	
	Outdoor Fan Speed Relay	On/Off		OFR	
	Outdoor Fan Relay 2	On/Off		OFR2	
	Outdoor Fan Relay 3	On/Off		OFR3	
	ODF On/Off Relay	On/Off		ODF_ON	

Table S — Status Display Tables (cont)

TABLE	DISPLAY NAME	VALUES	UNITS	POINT NAME	WRITE STATUS
HEATDISP					
	OK to Run Heat	Yes/No		OKTOHEAT	
	OK to SupplyAirTempering	Yes/No		OKTOTEMP	
	IDF Commanded RPM	0 to 3000	RPM	FSPD_RPM	
	Max Allowed Heat Stages	0 to 2		MAXHSTGS	Forcible
	Requested Heating Stages	0 to 2		REQHSTGS	
	Actual Heat Stage Active	x		ACTHSTGS	
	Heat Stage 1 Relay	On/Off		HEAT_1	
	Heat Stage 2 Relay	On/Off		HEAT_2	
	Heat Stage 1 Timeguard	xxx	sec	TIMGD_H1	
	Heat Stage 2 Timeguard	xxx	sec	TIMGD_H2	
	Defrost Mode Active	Yes/No		DFRSTACT	
	Defrost Switch	Open/Close		DFRST_SW	
	Mechanical Heating	Yes/No		MECHT_EN	
	Defrost Mode Active	Yes/No		DFRSTACT	
	Defrost Mode Timer	xxxx	sec	DF_TIMER	
	Defrost Interval Timer	xxxx	sec	DFINT_T	
	Heat2 delay timer	xxx	sec	H2DLTMR	
	Circuit A Compressor 1	On/Off		COMP_A1	
	Circuit A Compressor 2	On/Off		COMP_A2	
	Circuit A CMP A1 Loader	On/Off		COMP_ALD	
	Rev.Valve Solenoid Cir.A	On/Off		RVS_A	
	Compressor A1 Timeguard	xxx	sec	TIMGD_A1	
	Comp A1 Loader Timeguard	xxx	sec	TIMG_ALD	
	Compressor A2 Timeguard	xxx	sec	TIMGD_A2	
	ODF State	0=OFF, 1=ON, 2=LOW, 3=HIGH		ODFSTATE	
	Outdoor Fan Speed Relay	On/Off		OFR	
	Outdoor Fan Relay 2	On/Off		OFR2	
	Outdoor Fan Relay 3	On/Off		OFR3	
	ODF On/Off Relay	On/Off		ODF_ON	
	Cir.A Sat.Discharge Temp	xxx.x	°F	SDT_A	
	Cir.A Sat.Suction Temp	xxx.x	°F	SST_A	
	Cir.A Discharge Pressure	xxx.x	PSI	SDP_A	
	Cir.A Suction Pressure	xxx.x	PSI	SSP_A	
VENTDISP					
	Ventilation Status	see Appendix B		VENTSTAT	
	Ventilation Status	see Appendix B		VENTTEXT	
	Min Position in Effect	0 to 100	%	MIN_POS	Forcible
	In Pre-Occupancy Purge?	Yes/No		PREOCCON	
	Differential Air Quality	-5000 to 5000	PPM	AQ_DIFF	
	IDF Commanded RPM	0 to 3000	RPM	FSPD_RPM	
	Econo Commanded Position	0 to 100	%	DAMPCMD	Forcible
	Damper Actual Position	0 to 100	%	DAMPPOS	
	Free Cooling active	Yes/No		FREECOOL	
	Currently Occupied	Yes/No		OCCUPIED	Forcible
	OccupiedStandBY	Yes/No		OCCSTDBY	
	Mins until next occupied	-1 to 10080	min	MINTILOC	
	Ok to Preoccupancy Purge	Yes/No		OKPREOCC	
	Power Exhaust 1 Relay	On/Off		PE1	Forcible
	Power Exhaust 2 Relay	On/Off		PE2	Forcible
	2-Pos Damper/ERV relay	On/Off		ERV_2POS	
ALRMDISP					
	Active Alarm 1 Code	xxx		ALMCODE1	
	Active Alarm 2 Code	xxx		ALMCODE2	
	Active Alarm 3 Code	xxx		ALMCODE3	
	Active Alarm 4 Code	xxx		ALMCODE4	
	Active Alarm 5 Code	xxx		ALMCODE5	
	Reset All Current Alarms	Yes/No		ALRESET	Writable

Table S — Status Display Tables (cont)

TABLE	DISPLAY NAME	VALUES	UNITS	POINT NAME	WRITE STATUS
STRTHOUR					
	Compressor A1 Run Hours	xxxxxx.x	hrs	HR_A1	
	Compressor A2 Run Hours	xxxxxx.x		HR_A2	
	CMP A1 Loader Run Hours	xxxxxx.x	hrs	HR_ALDR	
	Alarm Relay Run Hours	xxxxxx.x	hrs	HR_ALM	
	CCH1 Relay Run Hours	xxxxxx.x	hrs	HR_CCHR1	
	Econ Damper Run Hours	xxxxxx.x	hrs	HR_DAMP	
	2Position/ERV Run Hours	xxxxxx.x	hrs	HR_ERV2P	
	Unit Full Load Run Hours	xxxxxx.x	hrs	HR_FLOAD	
	Free Cooling Run Hours	xxxxxx.x	hrs	HR_FREEC	
	Heat Stage 1 Run Hours	xxxxxx.x	hrs	HR_HTR_1	
	Heat Stage 2 Run Hours	xxxxxx.x	hrs	HR_HTR_2	
	Indoor Fan Run Hours	xxxxxx.x	hrs	HR_IDF	
	Indoor Fan2 Run Hours	xxxxxx.x	hrs	HR_IDF2	
	Defrost Run Hours	xxxxxx.x	hrs	HR_DFRST	
	LiquidLineValv Run Hours	xxxxxx.x	hrs	HR_LLSV	
	Max Fan Speed Run Hours	xxxxxx.x	hrs	HR_MAXF	
	MechanicalCool Run Hours	xxxxxx.x	hrs	HR_MECHC	
	MechanicalHeat Run Hours	xxxxxx.x	hrs	HR_MECHT	
	ODF Run Hours	xxxxxx.x	hrs	HR_ODF	
	ODF Relay Run Hours	xxxxxx.x	hrs	HR_OFR	
	ODF Relay 2 Run Hours	xxxxxx.x	hrs	HR_OFR2	
	ODF Relay 3 Run Hours	xxxxxx.x	hrs	HR_OFR3	
	ReverseSolValv Run Hours	xxxxxx.x	hrs	HR_RVS_A	
	Power Exhaust1 Run Hours	xxxxxx.x	hrs	HR_PE_1	
	Power Exhaust2 Run Hours	xxxxxx.x	hrs	HR_PE_2	
	Service Test Run Hours	xxxxxx.x	hrs	HR_STEST	
	Vent IDF Run Hours	xxxxxx.x	hrs	HR_VENTF	
STRTCNTS					
	Compressor A1 Starts	xxxxxx		ST_A1	
	Compressor A2 Starts	xxxxxx		ST_A2	
	CMP A1 Loader Starts	xxxxxx		ST_ALDR	
	Alarm Relay Starts	xxxxxx		ST_ALM	
	Alarm Reset Counts	xxxxxx		ST_ALRST	
	CCH1 Relay Starts	xxxxxx		ST_CCHR1	
	Economizer Damper Starts	xxxxxx		ST_DAMP	
	2Position/ERV Starts	xxxxxx		ST_ERV2P	
	Unit Full Load Starts	xxxxxx		ST_FLOAD	
	Free Cooling Starts	xxxxxx		ST_FREEC	
	Heat Stage 1 Starts	xxxxxx		ST_HTR_1	
	Heat Stage 2 Starts	xxxxxx		ST_HTR_2	
	Indoor Fan Starts	xxxxxx		ST_IDF	
	Indoor Fan2 Starts	xxxxxx		ST_IDF2	
	Defrost Mode Starts	xxxxxx		ST_DFRST	
	Liquid Line Valve Starts	xxxxxx		ST_LLSV	
	Max IDF Speed Starts	xxxxxx		ST_MAXF	
	Mechanical Cool Starts	xxxxxx		ST_MECHC	
	Mechanical Heat Starts	xxxxxx		ST_MECHT	
	ODF Starts Count	xxxxxx		ST_ODF	
	ODF Relay Starts	xxxxxx		ST_OFR	
	ODF Relay 2 Starts	xxxxxx		ST_OFR2	
	ODF Relay 3 Starts	xxxxxx		ST_OFR3	
	Power Exhaust 1 Starts	xxxxxx		ST_PE_1	
	Power Exhaust 2 Starts	xxxxxx		ST_PE_2	
	Power Cycle Counts	xxxxxx		ST_POR	
	ReverseSolValv Starts	xxxxxx		ST_RVS_A	
	Service Test Starts	xxxxxx		ST_STEST	
	Ventilation Fan Starts	xxxxxx		ST_VENTF	

Table S — Status Display Tables (cont)

TABLE	DISPLAY NAME	VALUES	UNITS	POINT NAME	WRITE STATUS
STRTRSTS					
	Comp A1 Resets Count	xxxxxx		RS_A1	
	Comp A2 Resets Count	xxxxxx		RS_A2	
	A1 Loader Resets Count	xxxxxx		RS_ALDR	
	Alarm Relay Resets Count	xxxxxx		RS_ALM	
	Alarm Reset Resets Count	xxxxxx		RS_ALRST	
	CCH1 Relay Resets Count	xxxxxx		RS_CCHR1	
	Econ Damper Resets Count	xxxxxx		RS_DAMP	
	2Position/ERV ResetCount	xxxxxx		RS_ERV2P	
	Full Load Resets Count	xxxxxx		RS_FLOAD	
	Free Cooling Reset Count	xxxxxx		RS_FREEC	
	Heat Stage 1 Reset Count	xxxxxx		RS_HTR_1	
	Heat Stage 2 Reset Count	xxxxxx		RS_HTR_2	
	Indoor Fan Reset Count	xxxxxx		RS_IDF	
	Indoor Fan2 Reset Count	xxxxxx		RS_IDF2	
	Defrost Reset Count	xxxxxx		RS_DFRST	
	LiquidLineValv Reset Cnt	xxxxxx		RS_LLSV	
	Max IDF Spd Resets Count	xxxxxx		RS_MAXF	
	Mech Cool Reset Count	xxxxxx		RS_MECHC	
	Mech Heat Reset Count	xxxxxx		RS_MECHT	
	ODF Resets Count	xxxxxx		RS_ODF	
	ODF Relay Resets Counts	xxxxxx		RS_OFR	
	ODF Relay2 Resets Counts	xxxxxx		RS_OFR2	
	ODF Relay3 Resets Counts	xxxxxx		RS_OFR3	
	P.Exhaust 1 Resets Count	xxxxxx		RS_PE_1	
	P.Exhaust 2 Resets Count	xxxxxx		RS_PE_2	
	Power Cycle Resets Count	xxxxxx		RS_POR	
	RevSolValv Reset Count	xxxxxx		RS_RVS_A	
	Reheat lev 1 Rst Count	xxxxxx		RS_RQHL1	
	Reheat lev 2 Rst Count	xxxxxx		RS_RQHL2	
	Service Test Reset Count	xxxxxx		RS_STEST	
	Vent IDF Resets Count	xxxxxx		RS_VENTF	

Table T — Maintenance Table

TABLE	DISPLAY NAME	VALUES	UNITS	POINT NAME	WRITE STATUS
MODES					
	Operating Mode	see Appendix B		MODETEXT	
	System Mode	see Appendix B		SYSMODE	
	Operating Sub-Mode	see Appendix B		SUBMTEXT	
	Running Mode Operation	see Appendix B		SUB_MODE	
	Ventilation Status	see Appendix B		VENTTEXT	
	Ventilation Status	see Appendix B		VENTSTAT	
	System Demand	see Appendix B		SYS_DMDT	
	System Demand	0 to 99		SYS_DMD	
	Currently Occupied	Yes/No		OCCUPIED	Forcible
	OccupiedStandBY	Yes/No		OCCSTDBY	
	Linkage Active	Yes/No		LNK_ACT	
	Unocc Free Cool Active	Yes/No		UFC_ACT	
	Temp Compensate Start On	Yes/No		TCS_ACT	
	Current Mode Ended	Yes/No		MODEDONE	
	Cool Mode Select T.guard	xxx	sec	COOLMSTG	
	Heat Mode Select T.guard	xxx	sec	HEATMSTG	
	Cool Setpoint in Effect	xx.x	°F	CSP_EFF	
	Heat Setpoint in Effect	xx.x	°F	HSP_EFF	
	Effective Demand Temp	xxx.x	°F	TEMP_EFF	
	Space Cooling Demand	xx.x	^F	COOL_DMD	
	Cooling Demand Trend	xx.x		CLDTREND	
	Heating Space Demand	xx.x	^F	HEAT_DMD	
	Heat Space Demand Trend	xx.x		HTDTREND	

Table T — Maintenance Table (cont)

TABLE	DISPLAY NAME	VALUES	UNITS	POINT NAME	WRITE STATUS
TESTMODE					
	Economizer Position Test	0 to 100	%	S_DAMPER	Writable
	Compressor Bump A1 Test	On/Off		S_BMPA1	Writable
	Rev.Val. Sole. Cir.A Tst	On/Off		S_RVS_A	Writable
	Compressor Bump A2 Test	On/Off		S_BMPA2	Writable
	LiqLine Solenoid Test	On/Off		S_LLSV	Writable
	Crankcase Heater 1 test	On/Off		S_CCHR1	Writable
	Alarm Output Relay Test	On/Off		S_ALARM	Writable
	Power Exhaust 1 Test	On/Off		S_PE_1	Writable
	Power Exhaust 2 Test	On/Off		S_PE_2	Writable
	2Position/ERV Relay Test	On/Off		S_ERV2P	Writable
	Econ Damper Calibration	On/Off		S_ECOCAL	Writable
	Indoor Fan Speed Test	0 to 100	%	S_IDFSPD	Writable
	IDF Manual Transition	Yes/No		S_IDFTRN	Writable
	Cooling W/Comp.A1 Test	On/Off		S_COOLA1	Writable
	Cooling W/Comp.A2 Test	On/Off		S_COOLA2	Writable
	Cooling W/Comp.ALD Test	On/Off		S_COLALD	Writable
	ODF On/Off Relay Test	On/Off		S_ODFON	Writable
	ODF Relay Test	On/Off		S_OFRSPD	Writable
	ODF Relay2 Test	On/Off		S_OFR2	Writable
	ODF Relay3 Test	On/Off		S_OFR3	Writable
	Heating Stage 1 Test	On/Off		S_HEAT1	Writable
	Heating Stage 2 Test	On/Off		S_HEAT2	Writable
	Mechanical Heating Test	On/Off		S_MECHT	Writable
	Defrost Test	On/Off		S_DFRST	Writable
	AUTO INDEPENDENT TEST	Yes/No		AUTOINDP	Writable
	RUN AUTO COOLING TEST	Yes/No		AUTOCOOL	Writable
	RUN AUTO HEATING TEST	Yes/No		AUTOHEAT	Writable
	RUN AUTO SYSTEM TEST	Yes/No		AUTOSYS	Writable
IDF_DIAG					
	IDF Commanded RPM	0 to 3000	RPM	FSPD_RPM	
	Commanded IDF Speed	0 to 100	%	FANSPEED	
	Commanded IDF Speed2	0 to 100	%	FANSPED2	
	Requested IDF Speed	0 to 100	%	RQFANSPD	
	IDF Vent Speed-RPM	0 to 3000	RPM	RPM_VENT	
	IDF Heat Speed-RPM	0 to 3000	RPM	RPM_HEAT	
	IDF Free Cool Speed-RPM	0 to 3000	RPM	RPM_FCL	
	IDF High Cool Speed-RPM	0 to 3000	RPM	RPM_HCL	
	IDF Maximum Fan Speed	0 to 100	%	SPEEDMAX	
	Fan Status Switch	On/Off		FAN_STAT	
	IDF Manual Limit Switch	Open/Close		IDF_LSM	
	IDF Speed Override Flag	On/Off		FAN_OVRD	
	IDF Speed Reduction On	Yes/No		FANRED10	
	IDF Operation Errors?	Yes/No		IDFBAD	

Table T — Maintenance Table (cont)

TABLE	DISPLAY NAME	VALUES	UNITS	POINT NAME	WRITE STATUS
USB_DIAG					
	USB TREND STATUS	0=IDLE, 1=TRENDING, 2=NO POINTS, 3=USB FULL		TRNDSTAT	
	USB TREND DURATION	0=FULL, 1=ROLLING, 2=LASTWEEK, 3=1 MINUTE, 4=5 MINUTES, 5=15 MINUTES, 6=30 MINUTES, 7=1 HOUR, 8=3 HOURS, 9=8 HOURS, 10=12 HOURS, 11=1 DAY, 12=1.5 DAYS, 13=2 DAYS, 14=3 DAYS, 15=5 DAYS, 16=1 WEEK, 17=2 WEEKS, 18=4 WEEKS		TRNDDUR	Writable
	USB TREND RATE	1 to 300	sec	TRNDRATE	Writable
	USB TREND POINTS FROM	0=FILE, 1=LIST		TRNDPNTS	Writable
	TREND FILE SEARCH	text		TRNDFILE	
	TREND EQUIP PERFORMANCE	On/Off		TRNDEQPR	Writable
	TREND COOL PERFORMANCE	On/Off		TRNDCLPR	Writable
	TREND HEAT PERFORMANCE	On/Off		TRNDHTPR	Writable
	Trend Cooling Diagnostic	On/Off		TRNDCLDG	Writable
	TREND IDF DIAGNOSTIC	On/Off		TRNDIDF	Writable
	TREND VENTILATION	On/Off		TRNDVENT	Writable
	TREND GEN INPUTS/OUTPUTS	On/Off		TRNDIO	Writable
	Start USB Trending	Yes/No		TREND_EN	Writable
	Make Config Backup File	Start/Stop		DDBCKUP	Writable
	Backup file is ready	0=IDLE, 1=SUCCESS, 2=FAILURE		BACKUP_R	
	USB Find Restore File	Yes/No		BACKFILE	Writable
	Start Config Restore	Start/Stop		DDRSTRE	Writable
	File Error	Yes/No		FILE_ERR	

Table T — Maintenance Table (cont)

TABLE	DISPLAY NAME	VALUES	UNITS	POINT NAME	WRITE STATUS
COOLDIAG					
	System Demand	see Appendix B		SYS_DMDT	
	Operating Sub-Mode	see Appendix B		SUBMTEXT	
	IDF Commanded RPM	0 to 3000	RPM	FSPD_RPM	
	OK to Use Free Cooling?	Yes/No		OKFREECL	
	Econ Damper Operational	Yes/No		DAMPGOOD	
	Dry Bulb Lockout	Yes/No		DBLOCK	Forcible
	Enthalpy Lockout	Yes/No		ENTHLOCK	Forcible
	Free Cooling active	Yes/No		FREECOOL	
	Unocc Free Cool Active	Yes/No		UFC_ACT	
	Free Cooling SAT Setpnt	xx.x	°F	FC_SATSP	
	Requested Damper Pos	0 to 100	%	REQDAMP	
	Econo Commanded Position	0 to 100	%	DAMPCMD	Forcible
	Ok to use compressors?	Yes/No		OKMECHCL	
	Compressor A1 strikes	x		A1STRIKE	
	Compressor A2 strikes	x		A2STRIKE	
	Circuit A Locked Out	Yes/No		CIRALOCK	
	Mechanical Cool active?	Yes/No		MECHCOOL	
	Max Allowed Cool Stages	0 to 3		MAXCSTGS	Forcible
	Supply Air Temp Trend	xxx.x		SATTREND	
	Supply Air Temperature	xxx..x	°F	SAT	
	Requested Cooling Stages	0 to 3		REQCSTGS	
	Low cooling locked out	Yes/No		LC_LOCK	
	Compressor A1 Timeguard	xxx	sec	TIMGD_A1	
	Compressor A2 Timeguard	xxx	sec	TIMGD_A2	
	Comp A1 Loader Timeguard	xxx	sec	TIMG_ALD	
	Compressor A1 Locked Out	Yes/No		CA1_LOCK	
	Compressor A2 Locked Out	Yes/No		CA2_LOCK	
	Compressor A1 Available	Yes/No		CA1_AVAL	
	Compressor A2 Available	Yes/No		CA2_AVAL	
	Recent Comp A1 Strike	Yes/No		A1STKACT	
	Recent Comp A2 Strike	Yes/No		A2STKACT	
	Circuit A Compressor 1	On/Off		COMP_A1	
	Circuit A Compressor 2	On/Off		COMP_A2	
	Circuit A CMP A1 Loader	On/Off		COMP_ALD	
	Rev.Valve Solenoid Cir.A	On/Off		RVS_A	
	Actual Cool Stage Active	x		ACTCSTGS	
	ODF On/Off Relay	On/Off		ODF_ON	
	Outdoor Fan Relay	On/Off		OFR	
	Outdoor Fan Relay 2	On/Off		OFR2	
	Outdoor Fan Relay 3	On/Off		OFR3	
	ODF State	0=OFF, 1=ON, 2=LOW, 3=HIGH		ODFSTATE	
	High Pressure Override	Yes/No		HP_OVR	
	Outdoor Air Temperature	xxx.x	°F	OAT	Forcible
	Ok to use Fan Dehum	Yes/No		OKTOFBD	
	FBDH SST Lockout	Yes/No		FBDSSTLO	
	FBDH SAT Lockout	Yes/No		FBDSATLO	
	Fan Based Dehum Type	0=NONE, 1=Comfort, 2=Max		FBD_TYPE	
	FBDH Comfort SAT SP	35 to 80	°F	FBDH_SAT	
	FBDH Max Mode SST SP	20 to 60	°F	FBDSSTSP	
	FBDH Low Set Point	-20 to 0	^F	FBDLO_SP	
	Cir.A High Pressure Sw	Open/Close		CIRA_HPS	
	Cir.A Discharge Pressure	xxx.x	PSI	SDP_A	
	Cir.A Suction Pressure	xxx.x	PSI	SSP_A	
	Circuit A Pressure Ratio	xx.xx		CIRA_PR	
	Cir.A Sat.Discharge Temp	xxx.x	°F	SDT_A	
	Cir.A Sat.Suction Temp	xxx.x	°F	SST_A	

Table T — Maintenance Table (cont)

TABLE	DISPLAY NAME	VALUES	UNITS	POINT NAME	WRITE STATUS
OKFCDIAG					
	Outdoor Air Temperature	xxx.x	°F	OAT	Forcible
	OA Relative Humidity	0 to 100	%	OARH	Forcible
	Outdoor Air Enthalpy	-9.6 to 334.2	BTU_LB	OA_ENTH	Forcible
	Return Air Temperature	xxx.x	°F	RAT	Forcible
	RA Relative Humidity	0 to 100	%	RARH	Forcible
	Return Air Enthalpy	-9.6 to 334.2	BTU_LB	RA_ENTH	Forcible
	Barometric Pressure	xx.xx	"Hg	BARP	Forcible
	Diff. Dry Bulb Control	Enable/Disable		DIFFBULB	
	Free Cooling Min Temp	-30 to 70	°F	MINFREET	
	Free Cooling Max OAT	0 to 90	°F	MAXFREET	
	Diff. Dry Bulb Deadband	0 to 20	°F	OATRATDB	
	Dry Bulb Lockout	Yes/No		DBLOCK	Forcible
	Diff. Enthalpy Control	Enable/Disable		DIFFENTH	
	Max Enthalpy OA limit	1 to 99	BTU_LB	FREEMAXE	
	Enthalpy Cross Deadband	0 to 20	BTU_LB	OAERAEDB	
	Enthalpy Switch	High/Low		ENTH_SW	Forcible
	Enthalpy Lockout	Yes/No		ENTHLOCK	Forcible
	Currently Occupied	Yes/No		OCCUPIED	Forcible
	Unocc Free Cool Low Temp	-30 to 70	°F	OATLUFC	
	Unocc Free Cool Lockout	Yes/No		UNOCLOCK	
	Econ Damper Operational	Yes/No		DAMPGOOD	
	OK to Use Free Cooling?	Yes/No		OKFREECL	
	Ok to Unocc Free Cool?	Yes/No		OKTOUFC	

Table T — Maintenance Table (cont)

TABLE	DISPLAY NAME	VALUES	UNITS	POINT NAME	WRITE STATUS
HEATDIAG					
	System Demand	see Appendix B		SYS_DMDT	
	Operating Sub-Mode	see Appendix B		SUBMTEXT	
	IDF Commanded RPM	0 to 3000	RPM	FSPD_RPM	
	OK to Run Heat	Yes/No		OKTOHEAT	
	All Heat Stages Lockout	Yes/No		ALLHTLOC	Forcible
	Max Allowed Heat Stages	0 to 2		MAXHSTGS	Forcible
	Supply Air Temp Trend	xxx.x		SATTREND	
	Supply Air Temperature	xxx..x	°F	SAT	
	Requested Heating Stages	0 to 2		REQHSTGS	
	Heat Stage 1 Timeguard	xxx	sec	TIMGD_H1	
	Heat Stage 2 Timeguard	xxx	sec	TIMGD_H2	
	Heat Stage 1 Available	Yes/No		HT1_AVAL	
	Heat Stage 2 Available	Yes/No		HT2_AVAL	
	Heat Stage 1 Relay	On/Off		HEAT_1	
	Heat Stage 2 Relay	On/Off		HEAT_2	
	Actual Heat Stage Active	x		ACTHSTGS	
	Outdoor Air Temperature	xxx.x	°F	OAT	Forcible
	Return Air Temperature	xxx.x	°F	RAT	Forcible
	Fan Supply Air Temp	xxx.x	°F	FST	
	Econo Commanded Position	0 to 100	%	DAMPCMD	Forcible
	Defrost Mode Timer	xxxx	sec	DF_TIMER	
	Defrost Interval Timer	xxxx	sec	DFINT_T	
	Defrost Mode Active	Yes/No		DFRSTACT	
	Heat2 delay timer	xxx	sec	H2DLTMR	
	Mechanical Heating	Yes/No		MECHT_EN	
	ODF State	0=OFF, 1=ON, 2=LOW, 3=HIGH		ODFSTATE	
	Compressor A1 Timeguard	xxx	sec	TIMGD_A1	
	Compressor A2 Timeguard	xxx	sec	TIMGD_A2	
	Comp A1 Loader Timeguard	xxx	sec	TIMG_ALD	
	Supply Air Temp Trend	xxx.x		SATTREND	
	Compressor A1 Strikes	x		A1STRIKE	
	Compressor A2 Strikes	x		A2STRIKE	
	Circuit A Locked Out	Yes/No		CIRALOCK	
	Compressor A1 Available	Yes/No		CA1_AVAL	
	Compressor A2 Available	Yes/No		CA2_AVAL	
	Compressor A1 Locked Out	Yes/No		CA1_LOCK	
	Compressor A2 Locked Out	Yes/No		CA2_LOCK	

Table T — Maintenance Table (cont)

TABLE	DISPLAY NAME	VALUES	UNITS	POINT NAME	WRITE STATUS
PE_DIAG					
	0=None				
	1=MBB RLY11				
	2=MBB RLY06				
	PE1 Relay Channel	0 to 2		PE1_CHAN	
	PE2 Relay Channel	0 to 2		PE2_CHAN	
	PE Turn Off Dead band	0 to 100	%	PE_OFFDB	
	Power Exhaust 1 Relay	On/Off		PE1	Forcible
	Power Exhaust 2 Relay	On/Off		PE2	Forcible
	Econo Commanded Position	0 to 100	%	DAMPCMD	Forcible
	IDF Commanded RPM	0 to 3000	RPM	FSPD_RPM	
	IDF Maximum Fan Speed	0 to 100	%	SPEEDMAX	
	P.Exhaust 1 Curve Offset	0 to 100	%	PE1_OFFS	
	P.Exhaust 2 Curve Offset	0 to 100	%	PE2_OFFS	
	Power Exhaust 1 - Speed1	0 to 100	%	PE1_SPD1	
	Power Exhaust 1 - Speed2	0 to 100	%	PE1_SPD2	
	Power Exhaust 1 - Speed3	0 to 100	%	PE1_SPD3	
	PE Stage 1 At Max Speed	0 to 100	%	PE1_PMAX	
	Power Exhaust 1 - Pos 1	0 to 100	%	PE1_POS1	
	Power Exhaust 1 - Pos 2	0 to 100	%	PE1_POS2	
	Power Exhaust 1 - Pos 3	0 to 100	%	PE1_POS3	
	Power Exhaust 2 - Speed1	0 to 100	%	PE2_SPD1	
	Power Exhaust 2 - Speed2	0 to 100	%	PE2_SPD2	
	Power Exhaust 2 - Speed3	0 to 100	%	PE2_SPD3	
	PE Stage 2 At Max Speed	0 to 100	%	PE2_PMAX	
	Power Exhaust 2 - Pos 1	0 to 100	%	PE2_POS1	
	Power Exhaust 2 - Pos 2	0 to 100	%	PE2_POS2	
	Power Exhaust 2 - Pos 3	0 to 100	%	PE2_POS3	

Table T — Maintenance Table (cont)

TABLE	DISPLAY NAME	VALUES	UNITS	POINT NAME	WRITE STATUS
VENTDIAG					
	Operating Sub-Mode	see Appendix B		SUBMTEXT	
	Ventilation Status	see Appendix B		VENTTEXT	
	Ventilation Status	see Appendix B		VENTSTAT	
	Currently Occupied	Yes/No		OCCUPIED	Forcible
	OccupiedStandBY	Yes/No		OCCSTDBY	
	Mins until next occupied	-1 to 10080	min	MINTILOC	
	Fan On When Occupied	Yes/No		FANON_OC	
	IDF Commanded RPM	0 to 3000	RPM	FSPD_RPM	
	Free Cooling active	Yes/No		FREECOOL	
	Min Position in Effect	0 to 100	%	MIN_POS	Forcible
	Requested Damper Pos	0 to 100	%	REQDAMP	
	Econo Commanded Position	0 to 100	%	DAMPCMD	Forcible
	Damper Actual Position	0 to 100	%	DAMPPOS	
	Analog Input IAQ Control	0=NO IAQ, 1=DCV, 2=IAQ OVRD, 3=CTRL MINP		IAQANCFG	
	Indoor Air Quality Level	xxxx	PPM	IAQ	Forcible
	OA Quality Level	xxxx	PPM	OAQ	Forcible
	Differential Air Quality	-5000 to 5000	PPM	AQ_DIFF	
	AQ Differential High	0 to 5000		DAQ_HIGH	
	AQ Differential Low	0 to 5000		DAQ_LOW	
	AQ Diff High IAQOVERRIDE	0 to 5000	PPM	AQD_HIGH	
	AQ Diff Low-IAQ OVERRIDE	0 to 5000	PPM	AQD_LOW	
	IAQ override enable	Yes/No		IAQOVREN	
	IAQ Preoccupancy Purge	Yes/No		IAQPURGE	
	Preocc Purge Lockout OAT	0 to 70	°F	IAQP_LA	
	Ok to Preoccupancy Purge	Yes/No		OKPREOCC	
	Preocc Purge Duration	5 to 120	min	IAQPTIME	
	In Pre-Occupancy Purge?	Yes/No		PREOCCON	
	Is IAQ Override Active?	Yes/No		IAQ_OVRD	
	IAQ Override Switch	On/Off		IAQ_OVRS	Forcible
	2-Pos Damper/ERV Channel	0=NONE, 1=MBB RLY11, 2=MBB RLY06		EV2PCHAN	
	Supply Air Temperature	xxx..x	°F	SAT	
	Return Air Temperature	xxx.x	°F	RAT	Forcible
	Outdoor Air Temperature	xxx.x	°F	OAT	Forcible
	Damper SAT deadband	0 to 20	°F	T24SATDB	
	T24 Min Diff in RAT-OAT	5 to 20	°F	T24RATDF	
	T24 Heat/Cool End Delay	0 to 60	min	T24CHDLY	
	SAT heat mode sensing	Enable/Disable		SAT_HEAT	
	Actual Heat Stage Active	x		ACTHSTGS	
	Actual Cool Stage Active	x		ACTCSTGS	
	OK to Use Free Cooling?	Yes/No		OKFREECL	
	T24 Test Minimum Pos	0 to 100	%	T24TSTMN	
	Econo Commanded Position	0 to 100	%	DAMPCMD	Forcible
	T24 Test Maximum Pos	0 to 100	%	T24TSTMX	
	T24Econ Min Move for SAT	10 to 20	%	T24ECSTS	
	Damper Actual Position	0 to 100	%	DAMPPOS	

Table T — Maintenance Table (cont)

TABLE	DISPLAY NAME	VALUES	UNITS	POINT NAME	WRITE STATUS
VENTCURV					
	Econ Min at Max Fanspeed	0 to 100	%	MINP_MAX	
	IDF Maximum Fan Speed	0 to 100	%	SPEEDMAX	
	Min Pos - User Pos 1	0 to 100	%	MP_UPOS1	
	Min Pos - User Pos 2	0 to 100	%	MP_UPOS2	
	Min Pos - User Pos 3	0 to 100	%	MP_UPOS3	
	Min Pos - User Speed 1	0 to 100	%	MP_USPD1	
	Min Pos - User Speed 2	0 to 100	%	MP_USPD2	
	Min Pos - User Speed 3	0 to 100	%	MP_USPD3	
	User Min Pos Pnt 1 Valid	Yes/No		MP_UPT1	
	User Min Pos Pnt 2 Valid	Yes/No		MP_UPT2	
	User Min Pos Pnt 3 Valid	Yes/No		MP_UPT3	
	Min Pos - Default Pos 1	0 to 100	%	MP_DPOS1	
	Min Pos - Default Pos 2	0 to 100	%	MP_DPOS2	
	Min Pos - Default Pos 3	0 to 100	%	MP_DPOS3	
	Min Pos - Default Speed1	0 to 100	%	MP_DSPD1	
	Min Pos - Default Speed2	0 to 100	%	MP_DSPD2	
	Min Pos - Default Speed3	0 to 100	%	MP_DSPD3	
	Min Pos Curve - Pos 1	0 to 100	%	MP_POS1	
	Min Pos Curve - Pos 2	0 to 100	%	MP_POS2	
	Min Pos Curve - Pos 3	0 to 100	%	MP_POS3	
	Min Pos Curve - Speed 1	0 to 100	%	MP_SPD1	
	Min Pos Curve - Speed 2	0 to 100	%	MP_SPD2	
	Min Pos Curve - Speed 3	0 to 100	%	MP_SPD3	
	IAQ DCV Curve Offset	0 to 100	%	IAQ_OFFS	
	IAQ Position at Max Fan	0 to 100	%	IAQMINP	
	IAQ DCV Curve - Pos 1	0 to 100	%	AQ_POS1	
	IAQ DCV Curve - Pos 2	0 to 100	%	AQ_POS2	
	IAQ DCV Curve - Pos 3	0 to 100	%	AQ_POS3	
	IAQ DCV Curve - Speed 1	0 to 100	%	AQ_SPD1	
	IAQ DCV Curve - Speed 2	0 to 100	%	AQ_SPD2	
	IAQ DCV Curve - Speed 3	0 to 100	%	AQ_SPD3	
	IAQ Purge Curve Offset	0 to 100	%	AQP_OFFS	
	IAQ Purge Pos at Max IDF	0 to 100	%	IAQPMAX	
	IAQ Purge Curve - Pos 1	0 to 100	%	AQP_POS1	
	IAQ Purge Curve - Pos 2	0 to 100	%	AQP_POS2	
	IAQ Purge Curve - Pos 3	0 to 100	%	AQP_POS3	
	IAQ Purge Curve - Speed1	0 to 100	%	AQP_SPD1	
	IAQ Purge Curve - Speed2	0 to 100	%	AQP_SPD2	
	IAQ Purge Curve - Speed3	0 to 100	%	AQP_SPD3	

Table T — Maintenance Table (cont)

TABLE	DISPLAY NAME	VALUES	UNITS	POINT NAME	WRITE STATUS
LINKDATA					
	Linkage CCN element #	xxx		LNK_SUPE	Forcible
	Linkage CCN Bus number	xxx		LNK_SUPB	Forcible
	Block No: in Master Zone	1 to 8		LNK_MZBK	Forcible
	Average Occup. Heat Stp.	xxx.x	°F	LNK_OHSP	Forcible
	Average Occup. Cool Stp.	xxx.x	°F	LNK_OCSP	Forcible
	Average Unocc. Heat Stp.	xxx.x	°F	LNK_UHSP	Forcible
	Average Unocc. Cool Stp.	xxx.x	°F	LNK_UCSP	Forcible
	Average Zone Temperature	xxx.x	°F	LNK_AZT	Forcible
	Average Occup. Zone Temp	xxx.x	°F	LNK_AOZT	Forcible
	Linkage Occupied Request	0 to 2		LNK_OCC	Forcible
	0=Unoccupied				
	1=Occupied				
	2=Disabled				
	Linkage Next Occ Day			LNEXTOCD	
	Linkage Next Occ Time			LNEXTOCT	
	Linkage Last Unocc Day			LNEXTUOD	
	Linkage Next Unocc Time			LNEXTUCT	
	Linkage Last Unocc Day			LLASTUOD	
	Linkage Last Unocc Time			LLASTUCT	
	Linkage Active	Yes/No		LNK_ACT	
	Linkage Equipment Mode	1 to 8		LNK_MODE	Forcible
	Linkage Start Bias time	xxx	min	LNK_SBT	Forcible
	Value of Prime variable	xxx.x		PRIME_V	

Table T — Maintenance Table (cont)

TABLE	DISPLAY NAME	VALUES	UNITS	POINT NAME	WRITE STATUS
OCC_DIAG					
	Currently Occupied	Yes/No		OCCUPIED	Forcible
	OccupiedStandBY	Yes/No		OCCSTDBY	
	Active Occupancy control	0 to 7		OCC_CTRL	
	0=24/7 OCC				
	1=Schedule				
	2=BAS CTRL				
	3=REMOC CTL				
	4=Time Override				
	5=Linkage				
	6=Forced				
	7=MOTION				
	Linkage Occupied Request	0=Unocc, 1=Occupied, 2=Disabled		LNK_OCC	Forcible
	Timed Override Hours	0 to 240	min	OVR_EXT	Forcible
	Remote Occupancy Switch	On/Off		REMOCC	Forcible
	BMS Occupancy Request	0 to 2		BMS_OCC	Forcible
	0=Unoccupied				
	1=Occupied				
	2=Disabled				
	Local Sched Occ Request	0 to 1		LOC_OCC	Forcible
	0=Unoccupied				
	1=Occupied				
	Active Schedule period	0 to 8		PER_NO	
	Mins until next occupied	-1 to 10080	min	MINTILOC	
	BACnetCal Object Status			CALOBJST	
	Today Is A Holiday	Yes/No		HOLTODAY	
	Tomorrow Is A Holiday	Yes/No		HOL_TMRW	
	Next Occupied Day	DDD		NXTOCDAY	
	Next Occupied Time	hh:mm	min	NXTOCTIM	
	Next Unoccupied Day	DDD		NXTUNDAY	
	Next Unoccupied Time	hh:mm	min	NXTUNTIM	
	Previous Unoccupied Day	DDD		PRVUNDAY	
	Previous Unoccupied Time	hh:mm	min	PRVUNTIM	
	Accept Global Holidays?	Yes/No		HOLIDAYT	
	Global Schedule Broadcst	Yes/No		CCN_GSBC	
	CCN Schedule Number	0 to 99		SCHEDNUM	
	0=Always Occupied				
	1-64=Local Schedule				
	65-99=Global Schedule				
	Remote Occupancy Channel	0=None, 1=MBB DI12, 2=MBB DI13, 3=MBB DI14, 4=MBB DI02, 5=MBB Y3		RMOCCHAN	
	Remote Occupancy Switch	On/Off		REMOCC	Forcible
	Timed Override Duration	0 to 4	hrs	OTL_CFG	
	BAS Protocol Select	0=NONE, 1=CCN, 2=BACNET		BMS_CFG	

Table T — Maintenance Table (cont)

TABLE	DISPLAY NAME	VALUES	UNITS	POINT NAME	WRITE STATUS
HW_IO					
	0=None				
	1=IAQ				
	2=OARH				
	3=RARH				
	4=OAQ				
	5=SPRH				
	6=OACFM				
	Assigned AI06 Function	0 to 6		MBBAI06F	
	Assigned AI07 Function	0 to 6		MBBAI07F	
	Assigned AI08 Function	0 to 6		MBBAI08F	
	0=None				
	1=COFS				
	2=REMOCC				
	3=REMOFF				
	4=FILTER				
	5=ENTHALPY				
	6=GEN STAT				
	7=HUMSTAT				
	8=IAQOVRD				
	9=SMK EVAC				
	10=SMK PRESS				
	11=SMK PURGE				
	12=FIREDOWN				
	13=FANSTATUS				
	14=PHASEMON				
	Assigned DI02 Function	0 to 14		MBBDI02F	
	Assigned DI03 Function	0 to 14		MBBDI03F	
	Assigned MBB Y3 Function	0 to 14		MBBDI09F	
	Assigned DI12 Function	0 to 14		MBBDI12F	
	Assigned DI13 Function	0 to 14		MBBDI13F	
	Assigned DI14 Function	0 to 14		MBBDI14F	
	0=None				
	1=Alarm Relay				
	2=PE1				
	3=PE2				
	Assigned Rly 06 Function	0 to 3		MBBRY06F	
	Assigned Rly 11 Function	0 to 3		MBBRY11F	
	Outdoor Air Temp Sensor	xxx.x	°F	OAT_LOC	
	Return Air Temp Sensor	xxx.x	°F	RAT_LOC	
	Space Temperature Sensor	xxx.x	°F	SPT_LOC	
	SPRH Sensor Value	0 to 100	%	SPRH_LOC	
	Local Space Temp Offset	xxxx	°F delta	SPTO_LOC	
	OARH Sensor Value	0 to 100	%	OARH_LOC	
	RARH Sensor Value	0 to 100	%	RARH_LOC	
	IAQ Sensor value	xxxx	PPM	IAQ_LOC	
	OAQ Sensor Value	xxxx	PPM	OAQ_LOC	
	OACFM Sensor value	xxx.x	CFM	OCFM_LOC	
	Equipment Model number	xxxxxxxxxxxxxxxxxx		EQ_MOD	
	Equipment Serial number	xxxxxxxxxx		EQ_SER	
	Application SW Version	CESR131805-01-xx		FW_CESR	
	Bootloader SW Version	CESR131659-xx-xx		BL_CESR	
	MBB Part Number	CEPL131117-xx-R		BD_CEPL	
	MBB Program Part Number	CEPP130644-xx-xx-xx-R		BD_CEPP	
	Base Board serial number	xxxxMxxxxx		BD_SER	

Table T — Maintenance Table (cont)

TABLE	DISPLAY NAME	VALUES	UNITS	POINT NAME	WRITE STATUS
ZSENSORS					
	Zone Sensor Temp Out	0	°F	ZSZT	
	Zone Sensor 1 Temp	0	°F	ZS1ZT	
	ZS2 temperature	0	°F	ZS2ZT	
	ZS3 temperature	0	°F	ZS3ZT	
	ZS4 temperature	0	°F	ZS4ZT	
	ZS5 temperature	0	°F	ZS5ZT	
	Zone Sensor Humidity Out	0	%	ZSSPRH	
	ZS1 humidity	0	%	ZS1ZHUM	
	ZS2 humidity	0	%	ZS2ZHUM	
	ZS3 humidity	0	%	ZS3ZHUM	
	ZS4 humidity	0	%	ZS4ZHUM	
	ZS5 humidity	0	%	ZS5ZHUM	
	ZS Motion Sensor	0		ZSZM	
	ZS motion sensor 1	0		ZS1ZM	
	ZS motion sensor 2	0		ZS2ZM	
	ZS motion sensor 3	0		ZS3ZM	
	ZS motion sensor 4	0		ZS4ZM	
	ZS motion sensor 5	0		ZS5ZM	
	ZS Override time remain	0	min	ZSOTR	
	ZS1 override time remain	0	min	ZS1OTR	
	ZS2 override time remain	0	min	ZS2OTR	
	ZS3 override time remain	0	min	ZS3OTR	
	ZS4 override time remain	0	min	ZS4OTR	
	ZS5 override time remain	0	min	ZS5OTR	
	ZS Setpoint Offset Output	0	°F delta	ZSSPTO	
	Zone Sensor CO2 Level	xxxx	PPM	ZS CO2	
	Zone sensor1 CO2 level	xxxx	PPM	ZS1 CO2	
	Zone sensor2 CO2 level	xxxx	PPM	ZS2 CO2	
	Zone sensor3 CO2 level	xxxx	PPM	ZS3 CO2	
	Zone sensor4 CO2 level	xxxx	PPM	ZS4 CO2	
	Zone sensor5 CO2 level	xxxx	PPM	ZS5 CO2	
	ZS1 cool setpoint offset	0	°F delta	ZS1CSOFF	
	ZS2 cool setpoint offset	0	°F delta	ZS2CSOFF	
	ZS3 cool setpoint offset	0	°F delta	ZS3CSOFF	
	ZS4 cool setpoint offset	0	°F delta	ZS4CSOFF	
	ZS5 cool setpoint offset	0	°F delta	ZS5CSOFF	
	ZS1 heat setpoint offset	0	°F delta	ZS1HSOFF	
	ZS2 heat setpoint offset	0	°F delta	ZS2HSOFF	
	ZS3 heat setpoint offset	0	°F delta	ZS3HSOFF	
	ZS4 heat setpoint offset	0	°F delta	ZS4HSOFF	
	ZS5 heat setpoint offset	0	°F delta	ZS5HSOFF	
USER_INS					
	Supply Voltage Leg 1	xxx	volts	L1VOLTS	Writable
	Supply Voltage Leg 2	xxx	volts	L2VOLTS	Writable
	Supply Voltage Leg 3	xxx	volts	L3VOLTS	Writable
	Comp A1 Amps Leg 1	0 to 100	Amps	CA1L1_A	Writable
	Comp A1 Amps Leg 2	0 to 100	Amps	CA1L2_A	Writable
	Comp A1 Amps Leg 3	0 to 100	Amps	CA1L3_A	Writable
	Comp A2 Amps Leg 1	0 to 100	Amps	CA2L1_A	Writable
	Comp A2 Amps Leg 2	0 to 100	Amps	CA2L2_A	Writable
	Comp A2 Amps Leg 3	0 to 100	Amps	CA2L3_A	Writable
	Elec. Heat Amps Leg 1	0 to 100	Amps	EHTL1_A	Writable
	Elec. Heat Amps Leg 2	0 to 100	Amps	EHTL2_A	Writable
	Elec. Heat Amps Leg 3	0 to 100	Amps	EHTL3_A	Writable

Table T — Maintenance Table (cont)

TABLE	DISPLAY NAME	VALUES	UNITS	POINT NAME	WRITE STATUS
POWRESET					
	Power Reset Event 00	mm/dd/yy, hh:mm:ss		POWRES00	
	Power Reset Event 01	mm/dd/yy, hh:mm:ss		POWRES01	
	Power Reset Event 02	mm/dd/yy, hh:mm:ss		POWRES02	
	Power Reset Event 03	mm/dd/yy, hh:mm:ss		POWRES03	
	Power Reset Event 04	mm/dd/yy, hh:mm:ss		POWRES04	
	Power Reset Event 05	mm/dd/yy, hh:mm:ss		POWRES05	
	Power Reset Event 06	mm/dd/yy, hh:mm:ss		POWRES06	
	Power Reset Event 07	mm/dd/yy, hh:mm:ss		POWRES07	
	Power Reset Event 08	mm/dd/yy, hh:mm:ss		POWRES08	
	Power Reset Event 09	mm/dd/yy, hh:mm:ss		POWRES09	
ALRESET1					
	Alarm Reset Event 00	mm/dd/yy, hh:mm:ss		ALMRES00	
	Alarm Reset Event 01	mm/dd/yy, hh:mm:ss		ALMRES01	
	Alarm Reset Event 02	mm/dd/yy, hh:mm:ss		ALMRES02	
	Alarm Reset Event 03	mm/dd/yy, hh:mm:ss		ALMRES03	
	Alarm Reset Event 04	mm/dd/yy, hh:mm:ss		ALMRES04	
	Alarm Reset Event 05	mm/dd/yy, hh:mm:ss		ALMRES05	
	Alarm Reset Event 06	mm/dd/yy, hh:mm:ss		ALMRES06	
	Alarm Reset Event 07	mm/dd/yy, hh:mm:ss		ALMRES07	
	Alarm Reset Event 08	mm/dd/yy, hh:mm:ss		ALMRES08	
	Alarm Reset Event 09	mm/dd/yy, hh:mm:ss		ALMRES09	
ALRESET2					
	Alarm Reset Event 10	mm/dd/yy, hh:mm:ss		ALMRES10	
	Alarm Reset Event 11	mm/dd/yy, hh:mm:ss		ALMRES11	
	Alarm Reset Event 12	mm/dd/yy, hh:mm:ss		ALMRES12	
	Alarm Reset Event 13	mm/dd/yy, hh:mm:ss		ALMRES13	
	Alarm Reset Event 14	mm/dd/yy, hh:mm:ss		ALMRES14	
	Alarm Reset Event 15	mm/dd/yy, hh:mm:ss		ALMRES15	
	Alarm Reset Event 16	mm/dd/yy, hh:mm:ss		ALMRES16	
	Alarm Reset Event 17	mm/dd/yy, hh:mm:ss		ALMRES17	
	Alarm Reset Event 18	mm/dd/yy, hh:mm:ss		ALMRES18	
	Alarm Reset Event 19	mm/dd/yy, hh:mm:ss		ALMRES19	
TOUCH					
	Equip Sys Touch Active			ETST_ACT	
	Equipment Touch SPT		°F	ETSPT	
	Equipment Touch RH		%	ETSPRH	
	System Touch Temp Value		°F	STST_NET	
	System Touch SPRH Value		%	STRH_NET	
	ET ST Aggregated SPT		°F	ETSTSPT	
	ET ST Aggregated SPRH		%	ETSTSPRH	

Table U — Service Config Table

TABLE	DISPLAY NAME	VALUES	UNITS	POINT NAME	DEFAULT
UNIT_CFG					
	Unit Startup Delay	10 to 600	sec	STARTDLY	30
	Unit Control Type	0 to 2		CTRLTYPE	0=TSTAT
	0=Thermostat				
	1=Space Sensor				
	2=RAT Control				
	Thermostat Hardware Type	0 to 3		STATTYPE	0=CONV 2C2H
	0=2 Stage Conventional				
	1=2 Stage Digital				
	2=3 Stage Conventional				
	3=3 Stage Digital				
	Unit Model Number Size	0 to 255		UNITSIZE	Match Model Size: 04, 05, 06, 07, 08, 09, 12, 14, 17, 24, 28
	Ventilation Method	0 to 4		VENTTYPE	0: No FIOP 1: Economizer FIOP 2: Two Position Damper FIOP
	0=None				
	1=Economizer				
	2=2-Position Damper				
	3=ERV				
	4=Economizing ERV				
	2-Pos Damper/ERV Channel	0 to 2		EV2PCHAN	0: No FIOP 2: FIOP
	0=None				
	1=MBB RLY11				
	2=MBB RLY06				
	Tstat Adaptive Staging	Yes/No		ADPTSTAT	Yes
	Change Filter Timer	0 to 9999	hrs	FILTLIFE	0
	Test Inactivity Time Out	0 to 6		TEST_ITO	4
	0=Disabled				
	1=30 Minutes				
	2=1 Hour				
	3=2 Hours				
	4=4 Hours				
	5=8 Hours				
	6=12 Hours				
	CCH Max Temperature	40 to 90	°F	CCHMAXT	65
	Std Barometric Pressure	13 to 35	"Hg	STD_BARP	29.92
	Linkage Stage inc. time	60 to 600	sec	LSTAGINC	180
	Unit's Maximum SAT	130 to 210	°F	UMAX_SAT	200
	Unit's Minimum SAT	30 to 70	°F	UMIN_SAT	32
	Auto Clr SAT Limit Fault	Yes/No		SATLACLR	No
	SAT Freeze Protection	Enable/Disbale		SATFZPRO	Enable
	Adaptive Temp Comp Start	Enable/Disable		TCS_CFG	Disable
	User TCS Start Bias Time	0 to 180	min	TCSUBIAS	0

Table U — Service Config Table (cont)

TABLE	DISPLAY NAME	VALUES	UNITS	POINT NAME	DEFAULT
DMD_CFG					
	Low Cool Demand On	-1 to 2	°F	DMDLCON	0.5
	Medium Cool Demand On	0.5 to 20	°F	DMDMCON	1
	High Cool Demand On	0.5 to 20	°F	DMDHCON	1.5
	Low Cool Demand Off	-1 to 2	°F	DMDLCOFF	-0.5
	Cool Demand Level Up	-2 to 2	°F	CDMD_LUP	-0.2
	Low Heat Demand On	-1 to 2	°F	DMDLHON	0.5
	High Heat Demand On	0.5 to 20	°F	DMDHHON	2
	Low Heat Demand Off	-1 to 2	°F	DMDLHOFF	-0.5
	Heat Demand Level Up	-2 to 2	°F	HDMD_LUP	-0.2
	Space Demand Time Guard1	60 to 600	sec	TDMD_TG1	120
	Space Demand Time Guard2	0 to 600	sec	TDMD_TG2	240
	Space Demand Time Guard3	5 to 120	min	TDMD_TG3	10
	COOL DMD Offset level 1	0 to 99	°F	CLDOLEV1	1
	COOL DMD Offset level 2	0 to 99	°F	CLDOLEV2	3
	COOL DMD Offset level 3	0 to 99	°F	CLDOLEV3	5
	Heat DMD Offset level 1	0 to 99	°F	HTDOLEV1	1
	Heat DMD Offset level 2	0 to 99	°F	HTDOLEV2	3
	Heat DMD Offset level 3	0 to 99	°F	HTDOLEV3	5

Table U — Service Config Table (cont)

TABLE	DISPLAY NAME	VALUES	UNITS	POINT NAME	DEFAULT
IN_D_CFG					
	0=None				
	1=MBB DI12				
	2=MBB DI13				
	3=MBB DI14				
	4=MBB DI02				
	5=MBB DI03				
	6=MBB Y3				
	COFS Assigned Channel	0 to 6		COFSCHAN	0: No FIOP 4: FIOP
	Remote Occupancy Channel	0 to 6		RMOCCHAN	0=NONE
	Remote Shutdown Channel	0 to 6		ROFFCHAN	0=NONE
	Filter Status Sw Channel	0 to 6		FILTCHAN	0: No FIOP 1: FIOP
	Enthalpy Sw Channel	0 to 6		ENTHCHAN	0=NONE
	General Status Channel	0 to 6		GEN_CHAN	0=NONE
	Humidistat Status Chan.	0 to 6		HUMDCHAN	0=NONE
	IAQ override sw channel	0 to 6		IAQOCHAN	0=NONE
	Fan Status Channel	0 to 6		FNSTCHAN	0=NONE
	Phase Monitor Channel	0 to 6		PMR_CHAN	0: no FIOP 3: FIOP
	Smoke Evacuation Sw Chan	0 to 6		EVACCHAN	0
	Smoke Pressure Sw Chan	0 to 6		PRESCHAN	0
	Smoke Purge Sw Channel	0 to 6		PURGCHAN	0
	Fire Switch Channel	0 to 6		FIRECHAN	0
	0=Normally Open				
	1=Normally Closed				
	COFS Switch Type	0 to 1		COFS_CFG	0=NORM CLSD
	Remote Occupancy Sw Type	0 to 1		RMOC_CFG	0=NORM OPEN
	Remote Shutdown SW Type	0 to 1		ROFF_CFG	0=NORM OPEN
	Filter Status Switch Type	0 to 1		FILT_CFG	0=NORM OPEN
	Enthalpy Switch Type	0 to 1		ENTH_CFG	0=NORM OPEN
	General Status Sw Type	0 to 1		GENS_CFG	0=NORM OPEN
	Humidistat Switch Type	0 to 1		HUMD_CFG	0=NORM OPEN
	IAQ Override Switch Type	0 to 1		IAQOSCFG	0=NORM OPEN
	Fan Status SW Type	0 to 1		FANSTCFG	0=NORM OPEN
	Phase Monitor SW Type	0 to 1		PMR_CFG	0=NORM CLSD
	Smoke Evacuation Sw Type	0 to 1		EVAC_CFG	0
	Smoke Pressure Sw Type	0 to 1		PRES_CFG	0
	Smoke Purge Switch Type	0 to 1		PURG_CFG	0
	Fire Shutdown Sw Type	0 to 1		FIRE_CFG	0
	General Status shutdown?	Yes/No		GENFATAL	Yes
	0=Normal				
	1=Emergency				
	Remote Shutdown ALM Type	0 to 1		ROFFTYPE	0=NORMAL

Table U — Service Config Table (cont)

TABLE	DISPLAY NAME	VALUES	UNITS	POINT NAME	DEFAULT
IN_A_CFG					
	0=None				
	1=MBB AI06				
	2=MBB AI07				
	3=MBB AI08				
	IAQ Assigned Channel	0 to 3		IAQ_CHAN	0: No FIOP 2: FIOP
	OAQ Assigned Channel	0 to 3		OAQ_CHAN	0=NONE
	OARH Assigned Channel	0 to 3		OARHCHAN	0: no FIOP 3: FIOP
	RARH Assigned Channel	0 to 3		RARHCHAN	0=NONE
	SPRH Assigned Channel	0 to 3		SPRHCHAN	0=NONE
	OACFM Assigned Channel	0 to 3		OCFMCHAN	0=NONE
	SPRH Sensor Value at 4mA	0 to 100	%	SPRH_4MA	0
	SPRH Sensor Value at 20mA	0 to 100	%	SPRH20MA	100
	IAQ Sensor Value at 4mA	0 to 5000	PPM	IAQ_4MA	0
	IAQ Sensor Value at 20mA	0 to 5000	PPM	IAQ_20MA	2000
	OAQ Sensor Value at 4mA	0 to 5000	PPM	OAQ_4MA	0
	OAQ Sensor Value at 20mA	0 to 5000	PPM	OAQ_20MA	2000
	OARH Sensor Value at 4mA	0 to 100	%	OARH_4MA	0
	OARH Sensor Val. at 20mA	0 to 100	%	OARH20MA	100
	RARH Sensor Value at 4mA	0 to 100	%	RARH_4MA	0
	RARH Sensor Value at 20mA	0 to 100	%	RARH20MA	100
	OACFM value at 4MA	0 to 2000	CFM	OCFM_4MA	0
	OACFM Value at 20mA	2000 to 5000	CFM	OCFM20MA	2000
IDF_CFG					
	Fan On When Occupied	Yes/No		FANON_OC	Yes
	IDF Maximum Fan Speed	0 to 100	%	SPEEDMAX	100
	IDF Vent Speed-RPM	0 to 3000	RPM	RPM_VENT	1281: Size 04 Medium Static Fan 1457: Size 04 High Static Fan 1269: Size 05 Medium Static Fan 1439: Size 05 High Static Fan 230v 1 ph 1556: Size 05 High Static Fan 230v 3ph, 460v, 575v 1398: Size 06 Medium Static Fan 1556: Size 06 High Static Fan 230v 1 ph 1659: Size 06 High Static Fan 230v 3ph, 460v, 575v 1302: FEQ 07 Medium Static Fan 1460: FEQ 07 High Static Fan 780: FEQ 08-12 Std/Med Static Fan 858: FEQ 08-12 High Static Fan 936: Size 17-24 Std/Med Static Fan 1030: Size 17-24 High Static Fan 858: FEQ 14 1030: FEQ 28 936: GEQ 07-12 Std/Med Static 1030: GEQ 07-12 High Static
	IDF Heat Speed-RPM	0 to 3000	RPM	RPM_HEAT	same as IDF HIGH COOL SPD (See page 80)
	IDF Free Cool Speed-RPM	0 to 3000	RPM	RPM_FCL	same as IDF VENT SPD (see Page 79)

Table U — Service Config Table (cont)

TABLE	DISPLAY NAME	VALUES	UNITS	POINT NAME	DEFAULT
IDF_CFG (cont)					
	IDF High Cool Speed-RPM	0 to 3000	RPM	RPM_HCL	1708: Size 04 Medium Static Fan 1942: Size 04 High Static Fan 1693: Size 05 Medium Static Fan 1919: Size 05 High Static Fan 230v 1ph 2075: Size 05 High Static Fan 230v 3ph, 460v, 575v 1864: Size 06 Medium Static Fan 2075: Size 06 High Static Fan 230v 1ph 2212: Size 06 High Static Fan 230v 3ph, 460v, 575v 1973: FEQ 07 Medium Static Fan 2212: Size 07 High Static Fan 1560: Size 08-12, 17-24 Std/Med Static Fan 1716: Size 08-12, 17-24 High Static Fan 1716: Size 14 and 28 1560: GEQ 07-12 Std/Med Static 1716: GEQ 07-12 High Static
	LOW COOL OFFSET	0 to 100	%	LCLOFSET	100: FEQ sizes 04-06 75: GEQ sizes 04-06 66: FEQ size 07, GEQ size 12 60: FEQ sizes 17-28 50: FEQ sizes 08-14, GEQ sizes 07-09
	FBDH Min Fan Speed	0 to 3000	RPM	FDRPMMIN	same as IDF VENT SPD (see Page 79)
	FBDH Max Fan Speed	0 to 3000	RPM	FDRPMMAX	same as same as IDF HIGH COOL SPD (See page 80)
	Shut down on IDF Failure	Yes/No		FATALFAN	Yes
	INDOOR MOTOR2 OFFSET	0 to 100	%	IFM2OFST	
	INDOOR MOTOR2 OFFSET EN	Enable/Disable		IFM2OFEN	Disable: all except below Enable: Horizontal sizes 17-28
	IDF Curve High End RPM	0 to 3000	RPM	IFMHIRPM	2190: Size 04 Medium Static Fan 2490; Size 04 High Static Fan 2170: Size 05 Medium Static Fan 2460: Size 05 High Static Fan 230v 1ph 2660: Size 05 High Static Fan 230v 3ph, 460v, 575v 2390: Size 06 Medium Static Fan 2660: Size 06 High Static Fan 230v 1ph 2836: Size 06 High Static Fan 230v 3ph, 460v, 575v 2530: Size 07 Medium Static Fan 2836: Size 07 High Static Fan 2000: Size 08-12 and 17-24 Std/ Med Static Fan 2200: Size 08-12 and 17-24 Std/ Med Static Fan 2200: Size 14 and 28 2000: GEQ 07-12 Std/Med Static 2200: GEQ 07-12 High Static
	IDF Curve Low End RPM	0 to 3000	RPM	IFMLORPM	219: Size 04 Medium Static Fan 249: Size 04 High Static Fan 217: Size 05 Medium Static Fan 246: Size 05 High Static Fan 230v 1ph 266: Size 05 High Static Fan 230v 3ph, 460v, 575v 239: Size 06 Medium Static Fan 266: Size 06 High Static Fan 230v 1ph 284: Size 06 High Static Fan 230v 3ph, 460v, 575v 253: Size 07 Medium Static Fan 284: Size 07 High Static Fan 250: Size 08-28 and GEQ 07
IDF_CFG (cont)					
	IDF Min Start RPM	xxxx	RPM	IDFSTSPD	300
	IDF Start Speed Time	xxx	sec	IDFSSTIM	30
	IDF Curve High End PWM	0 to 100	%	IFMHIPWM	97
	IDF Curve Low End PWM	0 to 100	%	IFMLOPWM	10

Table U — Service Config Table (cont)

TABLE	DISPLAY NAME	VALUES	UNITS	POINT NAME	DEFAULT
COOL_CFG					
	Compressor Min On Time	180 to 600	sec	C_MINON	300
	Compressor Min Off Time	120 to 600	sec	C_MINOFF	180
	Runtime to Reset Strikes	120 to 999	sec	MIN_ON_S	300
	Cool Stage Increase Time	120 to 999	sec	CSTAGINC	450
	Cooling SAT Trend Level	-1 to 1		SAT_TLC	-0.2
	Cool Min SAT Upper Level	35.0 to 65.0	°F	SATMIN_H	56
	Cool Min SAT Lower Level	35.0 to 65.0	°F	SATMIN_L	46
	Cooling Fan-Off Delay	0 to 600	sec	COOL_FOD	60
	ODF High Speed Time	0 to 300	sec	MINODFTM	120
	Circuit A Lockout Temp	-20 to 75	°F	OATLCMPA	40: no FIOP 0: Low Ambient FIOP 0: Size 12
	Low Cool lockout Temp	-20 to 60	°F	LCLOCKSP	10
	Low Refrig Charge Level	0 to 150	PSI	LOCHARGE	50
	Low Charge Disable Temp	-40 to 50	°F	LOCH_LOT	10
	CirA High Pressure Limit	400 to 700	PSI	HIPLIM_A	670: 50FEQ04-07, 50GEQ04-06 600: 50FEQ08-30, 50GEQ07-12
	Low Discharge Level	0 to 20	°F	SDTLEV	0
	Low Discharge Diagnostic	Enable/Disbale		DISLDPAL	Disable
	Minimum Pressure Ratio	0 to 5		MINPSI_R	1.35
	Suction OK Temperature	10 to 50	°F	SSTOK	18
	Low Suction Level 1 Temp	10 to 50	°F	SSTLEV1	20
	Low Suction Level 2 Temp	5 to 50	°F	SSTLEV2	15
	Low Suction Level 3 Temp	0 to 50	°F	SSTLEV3	10
	Delay On Low SST Check	0 to 300	sec	SSTCKDLY	0: no FIOP
	Comp Level 2 Diag Delay	1 to 99	sec	CDDTLEV2	15
	Low Discharge Diagnostic	Enable/Disable		DISLDPAL	Disable
	Circuit Stuck On Diag.	Enable/Disable		DCKTOFF	Enable
	Min discharge change	0 to 99	PSI	MDP_DISA	8
	Min Suction change	0 to 99	PSI	MDP_SUCA	10
	CirA P.Ratio off change	-1 to 1		OFFPR_A	-0.3
	Compressor Framework	0 to 2	0 to 2	SYSVTYPE	1: All except below 2: 50FEQ 04-06 0: 08-28; GEQ 07
	0=2 Compressors				
	1=Compressor + Loader				
	2=Compressor Only				
	Comp A1 Shutdown First	Yes/No		SDWN_A1	No
	Compressor A2 Shutdown	Yes/No		SDWN_A2	Yes
	Comp Loader Shutdown 1st	Yes/No		SDWN_ALD	Yes: All except below No: 50FEQ 04-06
	Fan Based Dehum Type	0=NONE, 1=Comfort, 2=Max		FBD_TYPE	0=NONE
	FBDH Low Set Point	-20 to 0	^F	FBDLO_SP	-2.5
	FBDH Max Mode SST SP	20 to 60	°F	FBDSSTSP	38
	FBDH Min SST Threshold	10 to 60	°F	FBDH_SST	32
	FBDH Comfort SAT SP	35 to 80	°F	FBDH_SAT	46
	FBD Comfort SAT Delta	0 to 30	°F	FBDSATDT	11
	Low Ambient Temperature	0 to 80	°F	LA_TEMP	70: 50FEQ 24-28 66: 50FEQ 04-07, 50GEQ 04-06 60: 50FEQ 08-17, 50GEQ 07-09 40: 50FEQ 14, 50GEQ 12
	Low Ambient Temp2	0 to 80	°F	LA_TEMP2	40

Table U — Service Config Table (cont)

TABLE	DISPLAY NAME	VALUES	UNITS	POINT NAME	DEFAULT
HEATCFG					
	Number Of Heating Stages	0 to 2		NUMHSTGS	1
	Heat Minimum On Time	60 to 600	sec	H_MINON	120
	Heat Minimum Off Time	60 to 600	sec	H_MINOFF	120
	Heat Stage Increase Time	120 to 999	sec	HSTAGINC	450
	Heating SAT Trend Level	-1 to 1		SAT_TLH	0.2
	Heat Max SAT Lower Level	85 to 200	°F	SATMAX_L	140: all except below 105: sizes 17-28
	Heat Max SAT Upper Level	85 to 200	°F	SATMAX_H	170: all except below 115: sizes 17-28
	Heating Fan-Off Delay	10 to 600	sec	HEAT_FOD	60
	Heating Lockout Temp	40 to 125	°F	OATLHEAT	75
	SAT heat mode sensing	Enable/Disable		SAT_HEAT	Enable
	Pre-Heat HX without IDF?	Enable/Disable		PREHT_HX	Disable
	Supply Air Temper Enable	Yes/No		SATEMPEN	No
	SA tempering Set point	35 to 80	°F	SATEMPSP	55
	Max OAT for SA tempering	40 to 80	°F	OATSTEMP	65
	LiquidLine Valve On Time	0 to 300	sec	LLSV_CT	60
	Min Time BTWN Defrosts	30 to 120	min	MINDFINT	60
	Defrost Max Duration	5 to 25	min	MAXDFTMR	10
	Startup Defrost Delay	0 to 120	min	DFHLD_T	5
	Comp UEOFF Diag Delay	0 to 300	sec	ACAOFF_T	30
	Max OAT for 3 Heat Stags	0 to 90	°F	HT2LCTMP	20
	Mech Heat Lockout Temp	-30 to 40	°F	OATLMECH	-8
ECON_CFG					
	Ventilation Method	0 to 4		VENTTYPE	0: No FIOP 1: Economizer FIOP 2: Two Position Damper FIOP
	0=None				
	1=Economizer				
	2=2-Position Damper				
	3=ERV				
	4=Economizing ERV				
	Econ Max Damper Position	0 to 100	%	DAMPMAX	100
	Economizer Travel Time	5 to 300	sec	ECONOTRV	150
	IDF Maximum Fan Speed	0 to 100	%	SPEEDMAX	100
	Econ Min at Max Fanspeed	0 to 100	%	MINP_MAX	30
	Min Pos - User Speed 1	0 to 100	%	MP_USPD1	0
	Min Pos - User Pos 1	0 to 100	%	MP_UPOS1	0
	Min Pos - User Speed 2	0 to 100	%	MP_USPD2	0
	Min Pos - User Pos 2	0 to 100	%	MP_UPOS2	0
	Min Pos - User Speed 3	0 to 100	%	MP_USPD3	0
	Min Pos - User Pos 3	0 to 100	%	MP_UPOS3	0
	LowFree Cool SAT Setpnt	40 to 80	°F	LCSASP	65
	High FreeCool SAT Setpnt	40 to 80	°F	HCSASP	55
	Free Cooling Max OAT	0 to 90	°F	MAXFREET	65
	Free Cooling Min Temp	-30 to 70	°F	MINFREET	0
	Diff. Dry Bulb Control	Enable/Disable		DIFFBULB	Disable
	Diff. Dry Bulb Deadband	0 to 20	°F	OATRATDB	3
	Max Enthalpy OA limit	1 to 99	BTU_LB	FREEMAXE	28
	Diff. Enthalpy Control	Enable/Disable		DIFFENTH	Disable
	Enthalpy Cross Deadband	0 to 20	BTU_LB	OAERAEDB	2
	ECONO PID - KP	0.00 to 99.90		ECONO_P	2.5
	ECONO PID - KI	0.00 to 99.90		ECONO_I	0.12
	ECONO PID - KD	0.00 to 99.90		ECONO_D	1
	ECONO PID - RATE	10 to 180	sec	ECONO_DT	15

Table U — Service Config Table (cont)

TABLE	DISPLAY NAME	VALUES	UNITS	POINT NAME	DEFAULT
ECON_CFG (cont)					
	When to Unocc Free Cool?	0 to 2		UFC_CFG	1=PreOcc
	0=Disabled				
	1=Pre-Occupancy				
	2=Unoccupied				
	UFC PreOcc Time	1 to 999	min	UFCTIME	120
	Unocc Free Cool Low Temp	-30 to 70	°F	OATLUFC	50
	PE Stage 1 At Max Speed	0 to 100	%	PE1_PMAX	40
	PE1 Relay Channel	0=NONE, 1=MBB RLY11, 2=MBB RLY06		PE1_CHAN	0: No FIOP 2: FIOP
	PE Turn Off Dead band	0 to 100	%	PE_OFFDB	5
	PE2 Relay Channel	0=NONE, 1=MBB RLY11, 2=MBB RLY06		PE2_CHAN	0=NONE
	PE Stage 2 At Max Speed	0 to 100	%	PE2_PMAX	75
	T24 Heat/Cool End Delay	0 to 60	min	T24CHDLY	25
	T24Econ Min Move for SAT	10 to 20	%	T24ECSTS	10
	Damper SAT deadband	0 to 20	°F	T24SATDB	12
	T24 Min Diff in RAT-OAT	5 to 20	°F	T24RATDF	15
	T24 Test Minimum Pos	0 to 100	%	T24TSTMN	15
	T24 Test Maximum Pos	0 to 100	%	T24TSTMX	85
IAQ_CFG					
	Analog Input IAQ Control	0 to 3		IAQANCFG	0: No FIOP 1: CO_2 FIOP
	0=No IAQ				
	1=DCV				
	2=IAQ Override				
	3=MINPOS Control				
	IAQ Position at Max Fan	0 to 100	%	IAQMINP	10
	AQ Differential Low	0 to 5000		DAQ_LOW	100
	AQ Differential High	0 to 5000		DAQ_HIGH	700
	IAQ Preoccupancy Purge	Yes/No		IAQPURGE	Yes
	IAQ Purge Pos at Max IDF	0 to 100	%	IAQPMAX	40
	Preocc Purge Lockout OAT	0 to 70	°F	IAQP_LA	50
	Preocc Purge Duration	5 to 120	min	IAQPTIME	15
	IAQ Sensor Value at 4mA	0 to 5000	PPM	IAQ_4MA	0
	IAQ Sensor Value at 20mA	0 to 5000	PPM	IAQ_20MA	2000
	OAQ Sensor Value at 4mA	0 to 5000	PPM	OAQ_4MA	0
	OAQ Sensor Value at 20mA	0 to 5000	PPM	OAQ_20MA	2000
	IAQ override sw channel	0=None, 1=MBB DI12, 2=MBB DI13, 3=MBB DI14, 4=MBB DI02, 5=MBB DI03, 6=MBB Y3		IAQOCHAN	0=NONE
	IAQ Override Switch Type	0=NORM OPEN, 1=NORM CLSD		IAQOSCFG	0=NORM OPEN

Table U — Service Config Table (cont)

TABLE	DISPLAY NAME	VALUES	UNITS	POINT NAME	DEFAULT
ALM_CFG					
	ALM Relay Assigned Chan	0 to 2		ALM_CHAN	1=MBB RLY11
	0=None				
	1=MBB RLY11				
	2=MBB RLY06				
	Thermostat Alerts	Yes/No		TSTAT_AL	Yes
	Hardware Failures Alerts	Yes/No		HW_AL	Yes
	SAT/RAT Sensor Alerts	Yes/No		SATRATAL	Yes
	OAT Thermistor Alerts	Yes/No		OATRL_AL	Yes
	Space Sensors Alerts	Yes/No		SPACE_AL	Yes
	Transducer Sensor Alerts	Yes/No		TRANS_AL	Yes
	RH sensor failure Alert	Yes/No		RHS_AL	Yes
	Air Quality CO2 Alerts	Yes/No		CO2S_AL	Yes
	OACFM Alarm Relay	Yes/No		OACFM_AL	No
	Economizer Alerts	Yes/No		ECON_AL	Yes
	Dirty Filter Alerts	Yes/No		FILT_AL	Yes
	General Status Alerts	Yes/No		GENS_AL	Yes
	Refrig Circuit Alerts	Yes/No		CKT_AL	Yes
	Compressor Alerts	Yes/No		COMP_AL	Yes
	Heating Failure Alerts	Yes/No		HEAT_AL	Yes
	Indoor Fan Alerts	Yes/No		FAN_AL	Yes
	Relay On Active Faults	Yes/No		FAULT_AL	Yes
ZSENSCFG					
	Zone Sensor 1 Address	0 to 255		ZSADDR1	255
	Zone Sensor 2 Address	0 to 255		ZSADDR2	255
	Zone sensor 3 address	0 to 255		ZSADDR3	255
	Zone sensor 4 address	0 to 255		ZSADDR4	255
	Zone sensor 5 address	0 to 255		ZSADDR5	255
	ZS Force Unoccup enable	Yes/No		ZSFUNEN	No
	ZS Force unocc wt delay	Yes/No		ZSFUNWT	No
	Zone sensor poll rate	1 to 100	sec	ZSPOLLRT	5
	ZS TLO Cont Enable	Yes/No		ZSTLOEN	No
	ZS TLO set during occ	Yes/No		ZSTLSOC	No
	Zone sensor UI Mode	1=Dual Offsets		ZSUIM	1=Dual Offsets
	Zone sensor unit	0=degrees F		ZSUNIT	0=degrees F
	ZS Motion Sensor Configuration	0=NONE, 1=REMLOC, 2=LOCOCC 3=TEMP_ONLY		ZSM_CFG	1=REMLOC
	ZS Time Out	5 to 60	min	ZSM_TMR	5
TOUCHCFG					
	System Touch Device Inst	0 to 4194303		DEVST	160099
	System Touch Poll Rate	0 to 60		POLLST	0
	System Touch AI for SPT	0 to 9999		AISTSPT	1
	System Touch AI for SPRH	0 to 9999		AISTSPRH	4
TRIM					
	OAT Sensor Trim Offset	-10 to 10	°F	OAT_TRIM	0
	RAT Sensor Trim Offset	-30 to 30	°F	RAT_TRIM	0
	FST Sensor Trim Offset	-10 to 10	°F	FST_TRIM	0
	SPT Sensor Trim Offset	-30 to 30	°F	SPT_TRIM	0
	SPTO Sensor Offset Trim	-1 to 1	°F	SPTOTRIM	0
	SPRH Sensor Trim Offset	-15 to 15	%	SPRHTRIM	0
	IAQ sensor trim offset	-200 to 200	PPM	IAQ_TRIM	0
	OAQ Sensor Trim Offset	-200 to 200	PPM	OAQ_TRIM	0
	OARH Sensor Trim Offset	-15 to 15	%	OARHTRIM	0
	RARH Sensor Trim Offset	-15 to 15	%	RARHTRIM	0
	Cir.A SSP Sensor Trim	-50 to 50	PSI	SSPATRIM	0
	Cir.A SDP Sensor Trim	-50 to 50	PSI	SDPATRIM	0
	Econ Fdback Trim Offset	-15 to 15	%	EC1DTRIM	0
	OACFM sensor trim offset	-200 to 200	CFM	OCFMTRIM	0
	Damper Low Calib. Error	xx	%	ECOMINCA	
	Damper High Calib. Error	xx	%	ECOMAXCA	

Table U — Service Config Table (cont)

TABLE	DISPLAY NAME	VALUES	UNITS	POINT NAME	DEFAULT
DISPLAY					
	Metric Display	Yes/No		DISPUNIT	No
	Display Language Select	0=English, 1=Spanish		LANGUAGE	0=English
	LCD Contrast Adjustment	1 to 10		LCD_CONT	5
	User Password Protection	Enable/Disable		PASS_EBL	Enable
	User Password	0 to 9999		PASSWORD	1111

Table V — Configuration Table

TABLE	DISPLAY NAME	VALUES	UNITS	POINT NAME	WRITE STATUS/ DEFAULT
SCHEDOVR					
	CCN Schedule Number	0=Always Occupied, 1-64=Local Schedule, 65-99=Global Schedule		SCHEDNUM	0
	Accept Global Holidays?	Yes/No		HOLIDAYT	No
	Global Schedule Broadcst	Yes/No		CCN_GSBC	No
	Timed Override Duration	0 to 4	hours	OTL_CFG	4
	Timed Override Remaining	0 to 240	min	OVR_EXT	Forcible
	Remote Occupancy Channel	0=None, 1=MBB DI12, 2=MBB DI13, 3=MBB DI14, 4=MBB DI02, 5=MBB Y3		RMOCCHAN	0=None
	Allow Global Overrides	Yes/No		GLBLOVER	Yes
	Allow SPT Ovrd Cancel	Yes/No		CLROVCFG	No
BAS_CFG					
	BAS Protocol Select	0=NONE, 1=CCN, 2=BACNET		BMS_CFG	0=NONE
	Network Input Timeout	0 to 600	min	NETINTO	30
	CCN Bus Number	0 to 239		CCNBUS	0
	CCN Element Number	1 to 239		CCNADD	1
	CCN Baud Rate	0=9600, 1=19200, 2=38400		BAUDENUM	2
	BACnet ID Number	0 to 4194302		BAC_ID	1610101
	BACnet Device Macaddress	1 to 127		BAC_MAC	1
	BACnet BMS baud rate	0=9600, 1=19200, 2=38400, 3=57600, 4=76800, 5=115200		BAC_BAUD	4=76800
	BACnet ID Auto ID	Yes/No		BAC_AUID	Yes
	ALC Auto Id Scheme	Yes/No		AUID	Yes

Table V — Configuration Table (cont)

TABLE	DISPLAY NAME	VALUES	UNITS	POINT NAME	WRITE STATUS/ DEFAULT
BACNET					
	BACnet ID Number	0 to 4194302		BAC_ID	1610101
	BACnet Device Macaddress	1 to 127		BAC_MAC	1
	BACnet BMS baud rate	0=9600, 1=19200, 2=38400, 3=57600, 4=76800, 5=115200		BAC_BAUD	4=76800
	BACnet ID Auto ID	Yes/No		BAC_AUID	Yes
	ALC Auto Id Scheme	Yes/No		AUID	Yes
	BACnet device for IAQ	0 to 4194303		DEVIAQ	1610100
	Object instance for IAQ	0 to 9999		OBJIAQ	1009
	Change of value for IAQ	0 to 60		COVIAQ	0
	BACnet device for OAQ	0 to 4194303		DEVOAQ	1610100
	Object instance for OAQ	0 to 9999		OBJOAQ	285
	Change of value for OAQ	0 to 60		COVOAQ	0
	BACnet device for OARH	0 to 4194303		DEVOARH	1610100
	Object instance for OARH	0 to 9999		OBJOARH	1022
	Change of value for OARH	0 to 60		COVOARH	0
	BACnet device for OAT	0 to 4194303		DEVOAT	1610100
	Object instance for OAT	0 to 9999		OBJOAT	1003
	Change of value for OAT	0 to 60		COVOAT	0
	BACnet device for RARH	0 to 4194303		DEVRARH	1610100
	Object instance for RARH	0 to 9999		OBJRARH	30
	Change of value for RARH	0 to 60		COVRARH	0
	BACnet device for RAT	0 to 4194303		DEVRAT	1610100
	Object instance for RAT	0 to 9999		OBJRAT	1010
	Change of value for RAT	0 to 60		COVRAT	0
	BACnet device for SPT	0 to 4194303		DEVSPT	1610100
	Object instance for SPT	0 to 9999		OBJSPT	2007
	Change of value for SPT	0 to 60		COVSPT	0

Table V — Configuration Table (cont)

TABLE	DISPLAY NAME	VALUES	UNITS	POINT NAME	WRITE STATUS/ DEFAULT
BRODEFS					
	CCN Broadcast Ack'er	Yes/No		CCNBCACK	No
	Global Schedule Broadcst	Yes/No		CCN_GSBC	No
	CCN Time Broadcast	Yes/No		CCNBC	No
	Broadcast OAT On Network	Yes/No		OATBC	No
	Broadcast OARH On Netwrk	Yes/No		OARHBC	No
	Broadcast OAQ On Network	Yes/No		OAQBC	No
	Broadcast IAQ On Network	Yes/No		IAQBC	No
	DST allowed?	Enable/Disable		DST_CFG	Enable
	DST Start Month	1=JANUARY, 2=FEBRUARY, 3=MARCH, 4=APRIL, 5=MAY, 6=JUNE, 7=JULY, 8=AUGUST, 9=SEPTEMBER, 10=OCTOBER, 11=NOVEMBER, 12=DECEMBER		STARTM	3
	DST Start Week	1 to 5		STARTW	2
	DST Start Day	1=MONDAY, 2=TUESDAY, 3=WEDNESDAY, 4=THURSDAY, 5=FRIDAY, 6=SATURDAY, 7=SUNDAY		STARTD	7
	DST Minutes to Add	0 to 90	min	MINADD	60
	DST Stop Month	1=JANUARY, 2=FEBRUARY, 3=MARCH, 4=APRIL, 5=MAY, 6=JUNE, 7=JULY, 8=AUGUST, 9=SEPTEMBER, 10=OCTOBER, 11=NOVEMBER, 12=DECEMBER		STOPM	11
	DST Stop Week	1 to 5		STOPW	1
	DST Stop Day	1=MONDAY, 2=TUESDAY, 3=WEDNESDAY, 4=THURSDAY, 5=FRIDAY, 6=SATURDAY, 7=SUNDAY		STOPD	7
	DST Minutes to Subtract	0 to 90	min	MINSUB	60
	Time in day to start DST	0 to 600	min	DST_TOD	120
ALARMDEF					
	Alarm Routing Control	00000000 to 11111111		ALRM_CNT	11000000
	Equipment Priority	0 to 7		EQP_TYPE	5
	Comm Failure Retry Time	1 to 240	min	RETRY_TM	10
	Re-Alarm Time	1 to 255	min	RE-ALARM	180
	Alarm System Name	up to 8 alphanum		ALRM_NAM	FEQGEQQE

Table V — Configuration Table (cont)

TABLE	DISPLAY NAME	VALUES	UNITS	POINT NAME	WRITE STATUS/ DEFAULT
HOLIDAY					
HOLDYxxS					
MON	Holiday Start Month	1 to 12=January to December		HD01STMN - HD30STMN	0
DAY	Holiday Start Day	1 to 31		HD01STDY - HD30STDY	0
LEN	Holiday Duration (days)	1 to 99		HD01LEN - HD30LEN	0
(repeat up to xx=30 Holidays)					
OCCDEFCS					
OCCPC01S					
	Timed Override Hours	0 to 240	min	OVR_EXT	Forcible
	Period x DOW (MTWTFSSH)	00000000 to 11111111		DOWx	00000000
	Occupied from	hh:mm		OCCTODx	00:00
	Occupied to	hh:mm		UNOCTODx	00:00
(repeat up to x=8 periods)					

Table W — Setpoint Table

TABLE NAME	DISPLAY NAME	VALUES	UNITS	POINT NAME	DEFAULT
SET_PNT					
	Occupied Cool Setpoint	55 to 80	°F	OCSP	78
	Occupied Heat Setpoint	55 to 80	°F	OHSP	68
	Unoccupied Cool Setpoint	65 to 95	°F	UCSP	85
	Unoccupied Heat Setpoint	40 to 80	°F	UHSP	60
	Heat-Cool Setpoint Gap	2 to 10	°F	HCSP_GAP	5
	SPT Offset Range (+/-)	0 to 5	°F	SPTO_RNG	5
	Occupied SPRH Setpoint	0 to 100	%	SPRH_OSP	55
	Unoccupied SPRH Setpoint	0 to 100	%	SPRH_USP	55
	Space RH Deadband	2 to 20	%	SPRH_DB	8

Table X — Contol ID Table

TABLE NAME	DISPLAY NAME	VALUES	UNITS	POINT NAME	DEFAULT
CTLRID					
	Device Name:	FEQGEQQE			
	Description:	text string			
	Location:	text string			
	Software Part Number:	CESR131805-01-xx			
	Model Number:	2 to 10			
	Serial Number:	0 to 5			
	Reference Number:	0 to 5			

APPENDIX E — BACNET™[1] POINTS LIST

Table Y — Analog Value (AV) Points

POINT DESCRIPTION	POINT ACCESS	UNITS	BACnet OBJECT NAME	BACnet ID	VALUE RANGE	CCN POINT EQUIVALENT
2-Pos Damper/ERV Channel	R/W	R/W	erv2chan	AV:8049	0 to 2	EV2PCHAN
2Position/ERV ResetCount	READ ONLY		rs_erv2p	AV:8046	0 to 65535	RS_ERV2P
2Position/ERV Run Hours	READ ONLY	hrs	hr_erv2p	AV:8055	0 to 999999	HR_ERV2P
2Position/ERV Starts	READ ONLY		st_erv2p	AV:8047	0 to 999999	ST_ERV2P
A1 Loader Resets Count	READ ONLY		rs_aldr	AV:7012	0 to 65535	RS_ALDR
Actual Cool Stage Active	READ ONLY		actcstgs	AV:194	0 to 3	ACTCSTGS
Actual Heat Stage Active	READ ONLY		acthstgs	AV:46	0 to 2	ACTHSTGS
Alarm display info	READ ONLY		alarm_info	AV:14	0 to 2	ALARM
Alarm Relay Resets Count	READ ONLY		rs_alm	AV:99	0 to 65535	RS_ALM
Alarm Relay Run Hours	READ ONLY	hrs	hour_alarm	AV:49	0 to 999999	HR_ALM
Alarm Relay Starts	READ ONLY		st_alm	AV:136	0 to 999999	ST_ALM
Alarm Reset Counts	READ ONLY		st_alrst	AV:137	0 to 999999	ST_ALRST
Alarm Reset Resets Count	READ ONLY		rs_alrst	AV:100	0 to 65535	RS_ALRST
AQ Diff Low-IAQ OVERRIDE	R/W	PPM	aqd_low	AV:443	0 to 5000	AQD_LOW
AQ Differential High	R/W		daq_high	AV:212	0 to 5000	DAQ_HIGH
AQ Differential Low	R/W	R	daq_low	AV:213	0 to 5000	DAQ_LOW
AQ DiffHigh-IAQ OVERRIDE	R/W	PPM	aqd_high	AV:442	0 to 5000	AQD_HIGH
Auto Clr SAT Limit Fault	R/W		satlaclr	AV:618	0 to 1	SATLACLR
Average Occup. Cool Stp.	R/W	°F	lnk_ocsp	AV:264	55 to 80	LNK_OCSP
Average Occup. Heat Stp.	R/W	°F	lnk_ohsp	AV:266	55 to 80	LNK_OHSP
Average Occup. Zone Temp	R/W	°F	lnk_aozt	AV:255	-40 to 245	LNK_AOZT
Average Unocc. Cool Stp.	R/W	°F	lnk_ucsp	AV:274	65 to 90	LNK_UCSP
Average Unocc. Heat Stp.	R/W	°F	lnk_uhsp	AV:275	40 to 80	LNK_UHSP
Average Zone Temperature	R/W	°F	lnk_azt	AV:256	-40 to 245	LNK_AZT
BACKUP Preparation Time	READ ONLY		bkpreptm	AV:336	0 to 65535	BKPREPTM
BACnet device for IAQ	R/W		deviaq	AV:8001	0 to 4194303	DEVIAQ
BACnet device for OAQ	R/W		devoaq	AV:8002	0 to 4194303	DEVOAQ
BACnet device for OARH	R/W		devoarh	AV:8004	0 to 4194303	DEVOARH
BACnet device for OAT	R/W		devoat	AV:8003	0 to 4194303	DEVOAT
BACnet device for RARH	R/W		devrarh	AV:8005	0 to 4194303	DEVRARH
BACnet device for RAT	R/W		devrat	AV:8006	0 to 4194303	DEVRAT
BACnet device for SPRH	R/W		devsprh	AV:8028	0 to 4194303	DEVSPRH
BACnet device for SPT	R/W		devspt	AV:8007	0 to 4194303	DEVSPT
BACnet Device Macaddress	R/W		bac_mac	AV:189	0 to 127	BAC_MAC
BACnet ID Number	R/W		bac_id	AV:188	0 to 4194302	BAC_ID
Barometric Pressure	R/W	IN_HG_OF_KPAG	barp	AV:161	10 to 35	BARP
Block No: in Master Zone	R/W		lnk_mzbk	AV:262	0 to 255	LNK_MZBK
CCH Max Temperature	R/W	°F	cch_max_t	AV:2	40 to 90	CCHMAXT
CCH1 Relay Resets Count	READ ONLY		rs_cchr1	AV:294	0 to 65535	RS_CCHR1
CCH1 Relay Run Hours	READ ONLY	hrs	hour_cchr1	AV:242	0 to 999999	HR_CCHR1
CCH1 Relay Starts	READ ONLY		st_cchr1	AV:301	0 to 999999	ST_CCHR1
Change Filter Timer	R/W	hrs	filter_service_hrs	AV:2019	0 to 9999	FILTLIFE
Change of value for IAQ	R/W		coviaq	AV:8015	0 to 60	COVIAQ
Change of value for OAQ	R/W		covoaq	AV:8016	0 to 60	COVOAQ
Change of value for OARH	R/W		covoarh	AV:8018	0 to 60	COVOARH
Change of value for OAT	R/W		covoat	AV:8017	0 to 60	COVOAT
Change of value for RARH	R/W		covrarh	AV:8019	0 to 60	COVRARH
Change of value for RAT	R/W		covrat	AV:8020	0 to 60	COVRAT
Change of value for SPRH	R/W		covsprh	AV:8030	0 to 60	COVSPRH
Change of value for SPT	R/W		covspt	AV:8021	0 to 60	COVSPT
Cir.A Discharge Pressure	R/W	PSI	sdp_a	AV:124	-67.06 to 699.63	SDP_A
Cir.A Sat.Discharge Temp	READ ONLY	°F	sdt_a	AV:295	-100 to 500	SDT_A
Cir.A Sat.Suction Temp	READ ONLY	°F	sst_a	AV:339	-100 to 500	SST_A
Cir.A Suction Pressure	READ ONLY	PSI	ssp_a	AV:131	-47.33 to 430.16	SSP_A
Circuit A Pressure Ratio	READ ONLY		cira_pr	AV:204	14.5 to 667.0	CIRA_PR
CMP A1 Loader Run Hours	READ ONLY	hrs	hr_aldr	AV:7010	0 to 999999	HR_ALDR
CMP A1 Loader Starts	READ ONLY		st_aldr	AV:7011	0 to 999999	ST_ALDR

1. Third-party trademarks and logos are the property of their respective owners.

Table Y — Analog Value (AV) Points (cont)

POINT DESCRIPTION	POINT ACCESS	UNITS	BACnet OBJECT NAME	BACnet ID	VALUE RANGE	CCN POINT EQUIVALENT
CMP Loader Timeguard	READ ONLY	sec	timg_ald	AV:164	0 to 600	TIMG_ALD
Commanded IDF Speed2	READ ONLY	%	FANSPEED2	AV:9078	0 to 100	FANSPEED2
Comp A1 Resets Count	READ ONLY		rs_a1	AV:97	0 to 65535	RS_A1
Comp UEOFF Diag Delay	R/W	sec	acaoff_t	AV:462	0 to 300	ACAOFF_T
Compressor A1 Run Hours	READ ONLY	hrs	hour_a1	AV:47	0 to 999999	HR_A1
Compressor A1 Run Hours	READ ONLY	hrs	hr_rlv_a	AV:458	0 to 999999	HR_RLV_A
Compressor A1 Starts	READ ONLY		st_a1	AV:134	0 to 999999	ST_A1
Compressor A1 strikes	READ ONLY		a1strike	AV:192	0 to 3	A1STRIKE
Compressor A1 Timeguard	READ ONLY	sec	timgd_a1	AV:162	0 to 600	TIMGD_A1
Compressor Min Off Time	R/W	sec	c_minoff	AV:202	120 to 600	C_MINOFF
Compressor Min On Time	R/W	sec	c_minon	AV:203	180 to 600	C_MINON
COOL DMD Offset level 1	R/W	°F	cdlm_level1	AV:400	0 to 40	CLDOLEV1
COOL DMD Offset level 2	R/W	°F	cdlm_level2	AV:401	0 to 40	CLDOLEV2
COOL DMD Offset level 3	R/W	°F	cdlm_level3	AV:402	0 to 40	CLDOLEV3
Cool Mode Select T.guard	READ ONLY	sec	cl_sel_timeguard	AV:40	0 to 65535	COOLMSTG
Cool Setpoint in Effect	READ ONLY	°F	csp_eff	AV:208	55 to 95	CSP_EFF
Cool Shed 1 demand band	R/W		coolsh1	AV:6014	0 to 55	COOLSH1
Cool Shed 2 demand band	R/W		coolsh2	AV:6015	0 to 55	COOLSH2
Cool Shed 3 demand band	R/W		coolsh3	AV:6016	0 to 55	COOLSH3
Cooling Demand Trend	READ ONLY		cldtrend	AV:205	-99 to 99	CLDTREND
Cooling Fan-Off Delay	R/W	sec	cool_fod	AV:207	0 to 600	COOL_FOD
Damper Actual Position	R/W	%	oa_dmpr_pos	AV:2022	0 to 100	DAMPPOS
Damper SAT deadband	R/W	°F	t24satdb	AV:308	0 to 20	T24SATDB
Defrost Max Duration	R/W	min	maxdftmr	AV:8042	5 to 25	MAXDFTMR
Defrost Mode Starts	READ ONLY		st_dfrst	AV:9012	0 to 999999	ST_DFRST
Defrost Reset Count	READ ONLY		rs_dfrst	AV:9013	0 to 65535	RS_DFRST
Defrost Run Hours	READ ONLY	hrs	hr_dfrst	AV:9011	0 to 999999	HR_DFRST
Delay On Low SST Check	R/W	sec	sstckdly	AV:300	0 to 300	SSTCKDLY
Diff. Dry Bulb Deadband	R/W	°F	oa_ra_diff_temp	AV:78	1.0 to 99.0	OATRATDB
Differential Air Quality	READ ONLY	PPM	aq_diff	AV:195	-5000 to 5000	AQ_DIFF
Econ Damper Resets Count	READ ONLY		rs_damp	AV:102	0 to 65535	RS_DAMP
Econ Damper Run Hours	READ ONLY	hrs	hour_damp	AV:51	0 to 999999	HR_DAMP
Econ Max Damper Position	R/W	%	dampmax	AV:185	0 to 100	DAMPMAX
Econ Min at Max Fanspeed	R/W	%	minp_max	AV:318	0 to 100	MINP_MAX
Econo Commanded Position	R/W	%	dmpr_cmd	AV:4	0 to 100	DAMPCMD
Economizer Damper Starts	READ ONLY		st_damp	AV:139	0 to 999999	ST_DAMP
Economizer Position Test	R/W	%	s_damper	AV:118	0 to 100	S_DAMPER
Economizer Travel Time	R/W	sec	eceonotrv	AV:226	5 to 300	ECONOTRV
Effective Deadband	R/W		effdb	AV:6007	0 to 55	EFFDB
Effective Demand Temp	READ ONLY	°F	temp_eff	AV:163	-40 to 245	TEMP_EFF
Effective Zone Setpoint	R/W	°F	effsp	AV:6006	55 to 90	EFFSP
Enthalpy Cross Deadband	R/W	BTU_LB	oa_ra_diff_enth	AV:77	0 to 20	OAERAEDB
Equipment Touch RH	R/W	%	EquipmentTouchRH	AV:1904	0 to 100	ETSPRH
Equipment Touch SPT	R/W	°F	EquipmentTouchSPT	AV:1902	-40 to 240	ETSPT
Fan Supply Air Temp	READ ONLY	°F	idf_sa_temp	AV:10	-40 to 245	FST
FBDH Low Set Point	R/W	°F delta	fbdlosp	AV:438	-20 to 0	FBDLO_SP
FBDH Max Fan Speed	R/W	RPM	fdrpmmax	AV:8057	0 to 5000	FDRPMMAX
FBDH Min Fan Speed	R/W	RPM	fdrpmmin	AV:8056	0 to 5000	FDRPMMIN
FBDH SAT Min value	R/W	°F	fbdh_sat	AV:436	35 to 80	FBDH_SAT
FBDH SAT Set Point	READ ONLY	°F	fbdsatsp	AV:441	0 to 240	FBDSATSP
FBDH SST Min value	R/W	°F	fbdh_sst	AV:437	10 to 60	FBDH_SST
Filter hour remaining	READ ONLY	hrs	filter_rntm	AV:2015	0 to 9999	FILTLEFT
Free Cooling Max OAT	R/W	°F	max_free_cl_temp	AV:67	0 to 90	MAXFREET
Free Cooling Min Temp	R/W	°F	min_free_cl_temp	AV:71	-30 to 70	MINFREET
Free Cooling Reset Count	READ ONLY		rs_freec	AV:104	0 to 65535	RS_FREEC
Free Cooling Run Hours	READ ONLY	hrs	hour_free_cl	AV:53	0 to 999999	HR_FREEC
Free Cooling Starts	READ ONLY		st_freec	AV:141	0 to 999999	ST_FREEC
Full Load Resets Count	READ ONLY		rs_fload	AV:103	0 to 65535	RS_FLOAD
Heat Demand Level Up	R/W	°F	hadmd_lup	AV:239	-2 to 2	HDMD_LUP
Heat DMD Offset level 1	R/W	°F	hdlm_level1	AV:403	0 to 40	HTDOLEV1
Heat DMD Offset level 2	R/W	°F	hdlm_level2	AV:404	0 to 40	HTDOLEV2

Table Y — Analog Value (AV) Points (cont)

POINT DESCRIPTION	POINT ACCESS	UNITS	BACnet OBJECT NAME	BACnet ID	VALUE RANGE	CCN POINT EQUIVALENT
Heat DMD Offset level 3	R/W	°F	hdlm_level3	AV:405	0 to 40	HTDOLEV3
Heat Low Suc Lvl Offset	R/W	°F	sstofset	AV:464	0 to 100	SSTOFSET
Heat Minimum Off Time	R/W	sec	h_minoff	AV:235	60 to 600	H_MINOFF
Heat Minimum On Time	R/W	sec	h_minon	AV:236	60 to 600	H_MINON
Heat Mode Select T.guard	READ ONLY	sec	ht_sel_timeguard	AV:45	0 to 65535	HEATMSTG
Heat Setpoint in Effect	READ ONLY	°F	hsp_eff	AV:243	40 to 80	HSP_EFF
Heat Shed 1 demand band	R/W		heatsh1	AV:6011	0 to 55	HEATSH1
Heat Shed 2 demand band	R/W		heatsh2	AV:6012	0 to 55	HEATSH2
Heat Shed 3 demand band	R/W		heatsh3	AV:6013	0 to 55	HEATSH3
Heat Space Demand Trend	READ ONLY		htdtrend	AV:244	-99 to 99	HTDTREND
Heat Stage 1 Reset Count	READ ONLY		rs_htr_1	AV:106	0 to 65535	RS_HTR_1
Heat Stage 1 Run Hours	READ ONLY	hrs	hour_ht_1	AV:54	0 to 999999	HR_HTR_1
Heat Stage 1 Starts	READ ONLY		st_htr_1	AV:142	0 to 999999	ST_HTR_1
Heat Stage 1 Timeguard	READ ONLY	sec	timgd_h1	AV:173	0 to 600	TIMGD_H1
Heat Stage 2 Reset Count	READ ONLY		rs_htr_2	AV:107	0 to 65535	RS_HTR_2
Heat Stage 2 Run Hours	READ ONLY	hrs	hour_ht_2	AV:55	0 to 999999	HR_HTR_2
Heat Stage 2 Starts	READ ONLY		st_htr_2	AV:143	0 to 999999	ST_HTR_2
Heat Stage 2 Timeguard	READ ONLY	sec	timgd_h2	AV:50	0 to 600	TIMGD_H2
Heat-Cool Setpoint Gap	R/W	°F delta	hcsp_gap	AV:238	2 to 10	HCSP_GAP
Heating Fan-Off Delay	R/W	sec	heat_fod	AV:241	10 to 600	HEAT_FOD
Heating Lockout Temp	R/W	°F	oatlheat	AV:8033	40 to 125	OATLHEAT
Heating Space Demand	READ ONLY	°F delta	heat_dmd	AV:240	-100 to 100	HEAT_DMD
High Cool Demand On	R/W	°F	dmdhcon	AV:215	0.5 to 20	DMDHCON
High FreeCool SAT Setpnt	R/W	°F	high_cool_sasp	AV:237	40 to 80	HCSASP
High Heat Demand On	R/W	°F	dmdhhon	AV:217	0.5 to 20	DMDHHON
IAQ Assigned Channel	R/W		iaq_channel	AV:7	0 to 3	IAQ_CHAN
IAQ DCV Curve - Pos 1	READ ONLY	%	aq_pos1	AV:196	0 to 100	AQ_POS1
IAQ DCV Curve - Pos 2	READ ONLY	%	aq_pos2	AV:197	0 to 100	AQ_POS2
IAQ DCV Curve - Pos 3	READ ONLY	%	aq_pos3	AV:198	0 to 100	AQ_POS3
IAQ DCV Curve - Speed 1	READ ONLY	%	aq_spd1	AV:199	0 to 100	AQ_SPD1
IAQ DCV Curve - Speed 2	READ ONLY	%	aq_spd2	AV:200	0 to 100	AQ_SPD2
IAQ DCV Curve - Speed 3	READ ONLY	%	aq_spd3	AV:201	0 to 100	AQ_SPD3
IAQ DCV Curve Offset	READ ONLY	%	iaq_offs	AV:245	0 to 100	IAQ_OFFS
IAQ Position at Max Fan	R/W	%	iaqminp	AV:246	0 to 100	IAQMINP
IAQ Purge Curve - Pos 1	READ ONLY	%	aqp_pos1	AV:358	0 to 100	AQP_POS1
IAQ Purge Curve - Pos 2	READ ONLY	%	aqp_pos2	AV:359	0 to 100	AQP_POS2
IAQ Purge Curve - Pos 3	READ ONLY	%	aqp_pos3	AV:360	0 to 100	AQP_POS3
IAQ Purge Curve - Speed1	READ ONLY	%	aqp_spd1	AV:361	0 to 100	AQP_SPD1
IAQ Purge Curve - Speed2	READ ONLY	%	aqp_spd2	AV:362	0 to 100	AQP_SPD2
IAQ Purge Curve - Speed3	READ ONLY	%	aqp_spd3	AV:363	0 to 100	AQP_SPD3
IAQ Purge Curve Offset	READ ONLY	%	aqp_offs	AV:364	0 to 100	AQP_OFFS
IAQ Sensor Value at 20mA	R/W	PPM	iaq_20ma	AV:12	0 to 5000	IAQ_20MA
IAQ Sensor Value at 4mA	R/W	PPM	iaq_4ma	AV:13	0 to 5000	IAQ_4MA
IDF Commanded RPM	READ ONLY	RPM	fspd_rpm	AV:8048	0 to 5000	FSPD_RPM
IDF Free Cool Speed-RPM	R/W	RPM	rpm_fcl	AV:8050	0 to 5000	RPM_FCL
IDF Heat Speed-RPM	R/W	RPM	rpm_heat	AV:8052	0 to 5000	RPM_HEAT
IDF High Cool Speed-RPM	R/W	RPM	rpm_hcl	AV:8051	0 to 5000	RPM_HCL
IDF Low Cool Speed-RPM	R/W	RPM	rpm_lcl	AV:8053	0 to 5000	RPM_LCL
IDF Maximum Fan Speed	R/W	%	speed_max	AV:36	80 to 100	SPEEDMAX
IDF Vent Speed-RPM	R/W	RPM	rpm_vent	AV:8054	0 to 5000	RPM_VENT
IDF2 Commanded RPM	R/W	RPM	fsp2_rpm	AV:9085	0 to 5000	FSP2_RPM
IMF2OFST	R/W	%	IFM2OFST	AV:9083	0 to 100	IFM2OFST
Indoor Air Quality Level	R/W	PPM	iaq	AV:1009	0 to 5000	IAQ
Indoor Fan Reset Count	READ ONLY		rs_idf	AV:108	0 to 65535	RS_IDF
Indoor Fan Run Hours	READ ONLY	hrs	hour_idf	AV:56	0 to 999999	HR_IDF
Indoor Fan Speed Test	R/W	%	s_idfspd	AV:119	0 to 100	S_IDFSPD
Indoor Fan Starts	READ ONLY		st_idf	AV:144	0 to 999999	ST_IDF
Indoor Fan2 Reset Count	R/W		rs_idf2	AV:622	0 to 65535	RS_IDF2
Indoor Fan2 Run Hours	READ ONLY	hrs	hour_idf2	AV:620	0 to 999999	HR_IDF2
Indoor Fan2 Starts	R/W	None	st_idf2	AV;621	0 to 999999	ST_IDF2
LA_TEMP2	R/W	°F	la_temp2	AV:9079	0 to 80	LA_TEMP2

Table Y — Analog Value (AV) Points (cont)

POINT DESCRIPTION	POINT ACCESS	UNITS	BACnet OBJECT NAME	BACnet ID	VALUE RANGE	CCN POINT EQUIVALENT
LDV_A Resets Count	READ ONLY		rs_ldv_a	AV:388	0 to 65535	RS_IDF3
LDV_A Run Hours	READ ONLY	hrs	hour_ldv_a	AV:380	0 to 999999	HR_LDV_A
LDV_A Starts	READ ONLY		st_ldv_a	AV:384	0 to 999999	ST_LDV_A
Linkage CCN Bus number	R/W		lnk_supb	AV:272	0 to 239	LNK_SUPB
Linkage CCN element #	R/W		lnk_supe	AV:273	0 to 239	LNK_SUPE
Linkage Cooling Required	READ ONLY	°F	lnk_creq	AV:257	0 to 30	LNK_CREQ
Linkage Damper Position	READ ONLY	%	lnk_dpos	AV:258	0 to 100	LNK_DPOS
Linkage Equipment Mode	READ ONLY		lnk_mode	AV:261	0 to 8	LNK_MODE
Linkage Heating Required	READ ONLY	°F	lnk_hreq	AV:259	0 to 30	LNK_HREQ
Linkage Maximum Airflow	READ ONLY		lnk_mair	AV:260	0 to 5000	LNK_MAIR
Linkage Optimal Start	READ ONLY	min	lnk_opst	AV:267	0 to 180	LNK_OPST
Linkage Space Air Qual.	READ ONLY	PPM	lnk_siaq	AV:270	0 to 2000	LNK_SIAQ
Liquid Line Valve Starts	READ ONLY		st_llsv	AV:8059	0 to 999999	ST_LLSV
LiquidLine Valve On Time	R/W	sec	llsv_ct	AV:463	0 to 300	LLSV_CT
LiquidLineValv Reset Cnt	READ ONLY		rs_llsv	AV:8060	0 to 65535	RS_LLSV
LiquidLineValv Run Hours	READ ONLY	hrs	hr_llsv	AV:8058	0 to 999999	HR_LLSV
Linkage Space RH	READ ONLY	%	lnk_sprh	AV:271	0 to 100	LNK_SPRH
Linkage Start Bias time	R/W	min	lnk_sbt	AV:269	0 to 180	LNK_SBT
Linkage static pressure	READ ONLY	IN_H2O	link_ahu_static	AV:312	-5 to 5	LNK_DSP
Linkage Supply air temp	READ ONLY	°F	lnk_sat	AV:268	-40 to 240	LNK_SAT
Local Std Time offset	R/W	min	utc_ofst	AV:191	-780 to 780	UTC_OFST
Low Charge Disable Temp	R/W	°F	loch_lot	AV:276	-40 to 50	LOCH_LOT
Low Cool Demand Off	R/W	°F	dmdlcoff	AV:218	-1 to 2	DMDLCOFF
Low Cool Demand On	R/W	°F	dmdlcon	AV:219	-1 to 2	DMDLCON
Low Cool Lockout Temp	R/W	°F	lclocksp	AV:8031	-20 to 60	LCLOCKSP
LOW COOL OFFSET	R/W	%	LCLOFSET	AV:9087	0 to 100	LCLOFSET
Low Heat Demand Off	R/W	°F	dmdlhoff	AV:220	-1 to 2	DMDLHOFF
Low Heat Demand On	R/W	°F	dmdlhon	AV:221	-1 to 2	DMDLHON
Low Refrig Charge Level	R/W	PSI	locharge	AV:277	0 to 150	LOCHARGE
LowFree Cool SAT Setpnt	R/W	°F	low_cool_sasp	AV:254	40 to 80	LCSASP
Max Allowed Cool Stages	R/W		max_cstgs	AV:278	0 to 3	MAXCSTGS
Max Allowed Heat Stages	R/W		max_hstgs	AV:279	0 to 2	MAXHSTGS
Max Enthalpy OA limit	R/W	BTU_LB	max_enth	AV:44	1.0 to 99.0	FREEMAXE
Max Fan Speed Run Hours	READ ONLY	hrs	hour_max_fan	AV:57	0 to 999999	HR_MAXF
Max IDF Spd Resets Count	READ ONLY		rs_maxf	AV:109	0 to 65535	RS_MAXF
Max IDF Speed Starts	READ ONLY		st_maxf	AV:145	0 to 999999	ST_MAXF
Max OAT for 3 Heat Stags	R/W	°F	ht2lctmp	AV:8039	-20 to 60	HT2LCTMP
Mech Cool Reset Count	READ ONLY		rs_mechc	AV:8069	0 to 65535	RS_MECHC
Mech Heat Reset Count	READ ONLY		rs_mecht	AV:8066	0 to 65535	RS_MECHT
Mechanical Cool Starts	READ ONLY		st_mechc	AV:8068	0 to 999999	ST_MECHC
Mechanical Heat Starts	READ ONLY		st_mecht	AV:8065	0 to 999999	ST_MECHT
MechanicalCool Run Hours	READ ONLY	hrs	hr_mechc	AV:8067	0 to 999999	HR_MECHC
MechanicalHeat Run Hours	READ ONLY	hrs	hr_mecht	AV:8064	0 to 999999	HR_MECHT
Medium Cool Demand On	R/W	°F	dmdmcon	AV:223	0.5 to 20	DMDMCON
Min Pos - Default Pos 1	READ ONLY	%	mp_dpos1	AV:319	0 to 100	MP_DPOS1
Min Pos - Default Pos 2	READ ONLY	%	mp_dpos2	AV:290	0 to 100	MP_DPOS2
Min Pos - Default Pos 3	READ ONLY	%	mp_dpos3	AV:320	0 to 100	MP_DPOS3
Min Pos - Default Speed1	READ ONLY	%	mp_dspd1	AV:321	0 to 100	MP_DSPD1
Min Pos - Default Speed2	READ ONLY	%	mp_dspd2	AV:322	0 to 100	MP_DSPD2
Min Pos - Default Speed3	READ ONLY	%	ms_dspd3	AV:323	0 to 100	MP_DSPD3
Min Pos - User Pos 1	R/W	%	mp_upos1	AV:329	0 to 100	MP_UPOS1
Min Pos - User Pos 2	R/W	%	mp_upos2	AV:330	0 to 100	MP_UPOS2
Min Pos - User Pos 3	R/W	%	mp_upos3	AV:331	0 to 100	MP_UPOS3
Min Pos - User Speed 1	R/W	%	mp_uspd1	AV:222	0 to 100	MP_USPD1
Min Pos - User Speed 2	R/W	%	mp_uspd2	AV:5	0 to 100	MP_USPD2
Min Pos - User Speed 3	R/W	%	mp_uspd3	AV:138	0 to 100	MP_USPD3
Min Pos Curve - Pos 1	READ ONLY	%	mp_pos1	AV:324	0 to 100	MP_POS1
Min Pos Curve - Pos 2	READ ONLY	%	mp_pos2	AV:325	0 to 100	MP_POS2
Min Pos Curve - Pos 3	READ ONLY	%	mp_pos3	AV:326	0 to 100	MP_POS3
Min Pos Curve - Speed 1	READ ONLY	%	mp_spd1	AV:327	0 to 100	MP_SPD1
Min Pos Curve - Speed 2	READ ONLY	%	mp_spd2	AV:15	0 to 100	MP_SPD2

Table Y — Analog Value (AV) Points (cont)

POINT DESCRIPTION	POINT ACCESS	UNITS	BACnet OBJECT NAME	BACnet ID	VALUE RANGE	CCN POINT EQUIVALENT
Min Pos Curve - Speed 3	READ ONLY	%	mp_spd3	AV:328	0 to 100	MP_SPD3
Min Position in Effect	R/W	%	min_pos	AV:412	0 to 100	MIN_POS
Min Time BTWN Defrosts	R/W	min	mindfint	AV:8040	30 to 120	MINDFINT
Mins until next occupied	READ ONLY	min	mintiloc	AV:175	-1 to 10080	MINTILOC
Momentary Setpoint Adj	R/W	°F delta	moset	AV:6022	0 to 20	MOSET
Momentary TLO Adjustment	R/W	sec	motlo	AV:6025	0 to 14400	MOTLO
Network IAQ Value	R/W	PPM	iaq_net	AV:7001	0 to 5000	IAQ_NET
Network Input Timeout	R/W	Min	netinto	AV:9089	1 to 600	NETINTO
Network OACFM Value	R/W	CFM	ocfm_net	AV:371	0 to 5000	OCFM_NET
Network OAQ Value	R/W	PPM	oaq_net	AV:7002	0 to 5000	OAQ_NET
Network OARH Value	R/W	%	oarh_net	AV:7003	0 to 100	OARH_NET
Network OAT Value	R/W	°F	oat_net	AV:7007	-40 to 245	OAT_NET
Network RARH Value	R/W	%	rarh_net	AV:7004	0 to 100	RARH_NET
Network Return Air Temp	R/W	°F	rat_net	AV:7005	-40 to 245	RAT_NET
Network Space Temp Value	R/W	°F	spt_net	AV:7006	-40 to 245	SPT_NET
Network SPRH Value	R/W	%	sprh_net	AV:376	0 to 100	SPRH_NET
Next Occupied Time	READ ONLY	min	nxtoctim	AV:176	-1 to 10080	NXTOCTIM
Next Unoccupied Time	READ ONLY	min	nxtuntim	AV:177	-1 to 10079	NXTUNTIM
Number of Active Alerts	READ ONLY		num_active_alerts	AV:334	0 to 100	NUMALRTS
Number of Active Faults	READ ONLY		num_active_faults	AV:335	0 to 100	NUMFLTS
Number Of Heating Stages	R/W		numhstgs	AV:284	0 to 2	NUMHSTGS
OA Quality Level	R/W	PPM	oaq	AV:1012	0 to 5000	OAQ
OA Relative Humidity	R/W	%	oarh	AV:1022	0 to 100	OARH
OACFM Assigned Channel	R/W		ocfmchan	AV:370	0 to 3	OCFMCHAN
OACFM at 4MA	R/W	CFM	ocfm_4ma	AV:369	0 to 5000	OCFM_4MA
OACFM Value at 20mA	R/W	CFM	ocfm20ma	AV:417	0 to 5000	OCFM20MA
OAQ Assigned Channel	R/W		oaq_channel	AV:426	0 to 3	OAQ_CHAN
OARH Assigned Channel	R/W		oarh_channel	AV:23	0 to 3	OARHCHAN
OARH Sensor Val. @ 20mA	R/W	%	oarh_20ma	AV:22	0 to 100	OARH20MA
OARH Sensor Value @ 4mA	R/W	%	oarh_4ma	AV:21	0 to 100	OARH_4MA
OATLimitForSupAirTemp	R/W	°F	oatstemp	AV:424	-40 to 125	OATSTEMP
Object instance for IAQ	R/W		objiaq	AV:8008	0 to 9999	OBJIAQ
Object instance for OAQ	R/W		objoaq	AV:8009	0 to 9999	OBJOAQ
Object instance for OARH	R/W		objoarh	AV:8011	0 to 9999	OBJOARH
Object instance for OAT	R/W		objoat	AV:8010	0 to 9999	OBJOAT
Object instance for RARH	R/W		objrarh	AV:8012	0 to 9999	OBJRARH
Object instance for RAT	R/W		objrat	AV:8013	0 to 9999	OBJRAT
Object instance for SPRH	R/W		objsprh	AV:8029	0 to 9999	OBJSPRH
Object instance for SPT	R/W		objspt	AV:8014	0 to 9999	OBJSPT
Occ Cooling Required	READ ONLY	°F	lnk_ocrq	AV:263	0 to 30	LNK_OCRQ
Occ Heating required	READ ONLY	°F	lnk_ohrq	AV:265	0 to 30	LNK_OHRQ
Occupied Cool Setpoint	R/W	°F	ocsp	AV:288	55 to 80	OCSP
Occupied Heat Setpoint	R/W	°F	ohsp	AV:289	55 to 80	OHSP
Occupied Setpoint Gap	R/W		odb	AV:6003	0 to 10	ODB
Occupied SPRH Setpoint	READ ONLY	%	sprh_osp	AV:367	0 to 100	SPRH_OSP
Occupied Zone Setpoint	R/W	°F	osp	AV:6002	40 to 80	OSP
ODF High Speed Time	R/W	sec	minodftm	AV:280	0 to 300	MINODFTM
ODF Relay Resets Counts	READ ONLY		rs_ofr	AV:8044	0 to 65535	RS_OFR
ODF Relay Run Hours	READ ONLY	hrs	hour_ofr	AV:8043	0 to 999999	HR_OFR
ODF Relay Starts	READ ONLY		st_ofr	AV:8045	0 to 999999	ST_OFR
ODF Relay 2 Run Hours	READ ONLY	hrs	hour_ofr2	AV:623	0 to 999999	HR_OFR2
ODF Relay 2 Starts	READ ONLY		st_ofr2	AV:624	0 to 999999	ST_OFR2
ODF Relay 3 Run Hours	READ ONLY	hrs	hour_ofr3	AV:626	0 to 999999	HR_OFR3
ODF Relay 3 Starts	READ ONLY		st_ofr3	AV:627	0 to 999999	ST_OFR3
ODF Relay2 Resets Counts	READ ONLY		rs_ofr2	AV:625	0 to 65535	PS_OFR2
ODF Relay3 Resets Counts	READ ONLY		rs_ofr3	AV:628	0 to 65535	RS_OFR3
Outdoor Air Enthalpy	R/W	BTU_LB (°F)	oa_enth	AV:76	-9.6 to 334.2	OA_ENTH
Outdoor Air in CFM	R/W	CFM	oacfm	AV:416	0 to 5000	OACFM
Outdoor Air Temp Sensor	READ ONLY	°F	oat_loc	AV:286	-40 to 245	OAT_LOC
Outdoor Air Temperature	R/W	°F	oa_temp	AV:1003	-40 to 245	OAT
P.Exhaust 1 Curve Offset	READ ONLY	%	pe1_offs	AV:317	0 to 100	PE1_OFFS

Table Y — Analog Value (AV) Points (cont)

POINT DESCRIPTION	POINT ACCESS	UNITS	BACnet OBJECT NAME	BACnet ID	VALUE RANGE	CCN POINT EQUIVALENT
P.Exhaust 1 Resets Count	READ ONLY		rs_pe_1	AV:113	0 to 65535	RS_PE_1
P.Exhaust 2 Curve Offset	READ ONLY	%	pe2_offs	AV:229	0 to 100	PE2_OFFS
P.Exhaust 2 Resets Count	READ ONLY		rs_pe_2	AV:114	0 to 65535	RS_PE_2
PE Stage 1 At Max Speed	R/W	%	pe1_pmax	AV:343	0 to 100	PE1_PMAX
PE Stage 2 At Max Speed	R/W	%	pe2_pmax	AV:344	0 to 100	PE2_PMAX
PE Turn Off Dead band	R/W	%	pe_offdb	AV:316	0 to 100	PE_OFFDB
PE1 Assigned Relay	R/W		pe1_channel	AV:365	0 to 2	PE1_CHAN
PE2 Assigned Relay	R/W		pe2_channel	AV:366	0 to 2	PE2_CHAN
Space Temp Value	R/W	°F	space_temp	AV:2007	-40 to 245	SPT
Power Cycle Counts	READ ONLY		st_por	AV:150	0 to 999999	ST_POR
Power Cycle Resets Count	READ ONLY		rs_por	AV:115	0 to 65535	RS_POR
Power Exhaust 1 - Pos 1	READ ONLY	%	pe1_pos1	AV:345	0 to 100	PE1_POS1
Power Exhaust 1 - Pos 2	READ ONLY	%	pe1_pos2	AV:346	0 to 100	PE1_POS2
Power Exhaust 1 - Pos 3	READ ONLY	%	pe1_pos3	AV:347	0 to 100	PE1_POS3
Power Exhaust 1 - Speed1	READ ONLY	%	pe1_spd1	AV:348	0 to 100	PE1_SPD1
Power Exhaust 1 - Speed2	READ ONLY	%	pe1_spd2	AV:349	0 to 100	PE1_SPD2
Power Exhaust 1 - Speed3	READ ONLY	%	pe1_spd3	AV:350	0 to 100	PE1_SPD3
Power Exhaust 1 Starts	READ ONLY		st_pe_1	AV:148	0 to 999999	ST_PE_1
Power Exhaust 2 - Pos 1	READ ONLY	%	pe2_pos1	AV:351	0 to 100	PE2_POS1
Power Exhaust 2 - Pos 2	READ ONLY	%	pe2_pos2	AV:352	0 to 100	PE2_POS2
Power Exhaust 2 - Pos 3	READ ONLY	%	pe2_pos3	AV:353	0 to 100	PE2_POS3
Power Exhaust 2 - Speed1	READ ONLY	%	pe2_spd1	AV:354	0 to 100	PE2_SPD1
Power Exhaust 2 - Speed2	READ ONLY	%	pe2_spd2	AV:355	0 to 100	PE2_SPD2
Power Exhaust 2 - Speed3	READ ONLY	%	pe2_spd3	AV:356	0 to 100	PE2_SPD3
Power Exhaust 2 Starts	READ ONLY		st_pe_2	AV:149	0 to 999999	ST_PE_2
Power Exhaust1 Run Hours	READ ONLY	hrs	hour_pe_1	AV:61	0 to 999999	HR_PE_1
Power Exhaust2 Run Hours	READ ONLY	hrs	hour_pe_2	AV:62	0 to 999999	HR_PE_2
Preocc Purge Duration	R/W	min	iaqptime	AV:252	5 to 120	IAQPTIME
Preocc Purge Lockout OAT	R/W	°F	iaqp_la	AV:248	0 to 70	IAQP_LA
Previous Unoccupied Time	READ ONLY	min	prvuntim	AV:182	-1 to 10079	PRVUNTIM
RA Relative Humidity	R/W	%	rarh	AV:30	0 to 100	RARH
RARH Assigned Channel	R/W		rarh_channel	AV:33	0 to 3	RARHCHAN
RARH Sensor Value @ 20mA	R/W	%	rarh_20ma	AV:32	0 to 100	RARH20MA
RARH Sensor Value @ 4mA	R/W	%	rarh_4ma	AV:31	0 to 100	RARH_4MA
Req Compr DehumStgs	R/W		reqdstgs	AV:413	0 to 10	REQDSTGS
Requested Cooling Stages	READ ONLY		req_cstgs	AV:292	0 to 3	REQCSTGS
Requested Damper Pos	R/W	%	dmpr_req_pos	AV:4006	0 to 100	DAMPRQ
Requested Heating Stages	READ ONLY		reqhstgs	AV:293	0 to 2	REQHSTGS
Requested IDF Speed	READ ONLY	%	req_fan_spd	AV:35	0 to 100	RQFANSPD
Reset Device	R/W		resetdev	AV:184	0 to 1	RESETDEV
Restore Completion Time	READ ONLY		rstcomtm	AV:337	0 to 65535	RSTCOMTM
Return Air Enthalpy	R/W	BTU_LB (°F)	ra_enth	AV:95	-9.6 to 334.2	RA_ENTH
Return Air Temp Sensor	READ ONLY	°F	rat_loc	AV:291	-40 to 245	RAT_LOC
Return Air Temperature	R/W	°F	ra_temp	AV:1010	-40 to 245	RAT
ReverseSolValv Run Hours	READ ONLY	hrs	hr_rvs_a	AV:8061	0 to 999999	HR_RVS_A
ReverseSolValv Run Hours	READ ONLY	hrs	hr_rvs_a	AV:8061	0 to 999999	HR_RVS_A
ReverseSolValv Starts	READ ONLY		st_rvs_a	AV:8062	0 to 999999	ST_RVS_A
RevSolValv Reset Count	READ ONLY		rs_rvs_a	AV:8063	0 to 65535	RS_RVS_A
SAT Freeze Protection	R/W		satfzpro	AV:619	0 to 1	SATFZPRO
SA Tempering Set point	R/W	°F	sup_air_temp_setpt	AV:411	-20 to 60	SATEMPSP
Service Test Reset Count	READ ONLY		rs_stest	AV:116	0 to 65535	RS_STEST
Service Test Run Hours	READ ONLY	hrs	hour_serv_tst	AV:63	0 to 999999	HR_STEST
Service Test Starts	READ ONLY		st_stest	AV:151	0 to 999999	ST_STEST
Setpoint adjustment	R/W	°F delta	setadj	AV:6021	0 to 1	SETADJ
Single Zone Setpoint	R/W	°F	zonespt	AV:6001	55 to 80	ZONESPT
Software Build Time	READ ONLY		fw_bldtm	AV:169	0 to 4294967295	FW_BLDTM
Space Demand Time Guard2	R/W	sec	tdmd_tg2	AV:186	0 to 600	TDMD_TG2
Space Demand Time Guard3	R/W	min	tdmd_tg3	AV:187	5 to 120	TDMD_TG3
Space RH	R/W	%	space_rh	AV:1011	0 to 100	SPRH
Space RH Deadband	R/W	%	sprh_db	AV:368	0 to 100	SPRH_DB
Space Temperature	R/W	°F	space_t	AV:296	-40 to 245	SPACE_T

Table Y — Analog Value (AV) Points (cont)

POINT DESCRIPTION	POINT ACCESS	UNITS	BACnet OBJECT NAME	BACnet ID	VALUE RANGE	CCN POINT EQUIVALENT
Space Temperature Offset	R/W	°F delta	stpt_adj	AV:1006	-10 to 10	SPTO
Space Temperature Sensor	READ ONLY	°F	spt_loc	AV:297	-40 to 245	SPT_LOC
SPRH Assigned Channel	R/W		sprhchan	AV:372	0 to 3	SPRHCHAN
SPRH Sensor Value @ 20mA	R/W	%	sprh_20ma	AV:373	0 to 100	SPRH20MA
SPRH Sensor Value @ 4mA	R/W	%	sprh_4ma	AV:375	0 to 100	SPRH_4MA
SPT Offset Range (+/-)	R/W	°F	spto_rng	AV:298	0 to 5	SPTO_RNG
SPT Offset Total diff	READ ONLY	°F delta	sptodiff	AV:6020	0 to 20	SPTODIFF
Std Barometric Pressure	R/W	IN_HG_OF_KPAG	std_barp	AV:303	10 to 35	STD_BARP
Supply Air Temp Trend	READ ONLY		sattrend	AV:342	-285 to 285	SATTREND
Supply Air Temperature	READ ONLY	°F	sa_temp	AV:1008	-40 to 245	SAT
System Demand	READ ONLY		sys_demand	AV:37	0 to 255	SYS_DMD
System Touch AI for SPRH	R/W		aistsprh	AV:8027	0 to 9999	AISTSPRH
System Demand Alert	R/W		sys_dmd_alert	AV:227	0 to 65535	SYSDMDAT
System Touch AI for SPT	R/W		aistspt	AV:8026	0 to 9999	AISTSPT
Space Cooling Demand	READ ONLY	°F delta	cool_dmd	AV:206	-100 to 100	COOL_DMD
Space Demand Time Guard1	R/W	sec	tdmd_tg1	AV:311	60 to 600	TDMD_TG1
System Touch Device Inst	R/W		devst	AV:8024	0 to 4194303	DEVST
System Touch Poll Rate	R/W		pollst	AV:8025	10 to 60	POLLST
System Touch RH Value	R/W	%	strh_net	AV:8022	0 to 100	STRH_NET
System Touch Temp Value	R/W	°F	stst_net	AV:8023	-40 to 245	STST_NET
T24 Heat/Cool End Delay	R/W	min	t24chdly	AV:305	0 to 60	T24CHDLY
T24 Min Diff in RAT-OAT	R/W	°F	t24ratdf	AV:307	5 to 20	T24RATDF
T24 Test Maximum Pos	R/W	%	t24tstmx	AV:310	0 to 100	T24TSTMX
T24 Test Minimum Pos	R/W	%	t24tstmn	AV:309	0 to 100	T24TSTMN
T24Econ Min Move for SAT	R/W	%	t24ecsts	AV:306	0 to 100	T24ECSTS
Timed Override Duration	R/W	hrs	otl_cfg	AV:179	0 to 4	OTL_CFG
Timed Override Hours	R/W	min	ovr_ext	AV:180	0 to 240	OVR_EXT
TLO cancel	R/W	sec	tlocan	AV:6029	0 to 10	TLOCAN
TLO limit	R/W	sec	tlolim	AV:6027	0 to 14400	TLOLIM
TLO Time Remaining	READ ONLY	sec	tlorem	AV:6028	0 to 14400	TLOREM
UFC PreOcc Time	R/W	min	ufctime	AV:105	1 to 999	UFCTIME
Unit Full Load Run Hours	READ ONLY	hrs	hour_full_ld	AV:52	0 to 999999	HR_FLOAD
Unit Full Load Starts	READ ONLY		st_fload	AV:140	0 to 999999	ST_FLOAD
Unit Minimum SAT	R/W	°F	umin_sat	AV:617	-40 to 245	UMIN_SAT
Unit Model Number Size	R/W		unitsize	AV:8075	0 to 255	UNITSIZE
Unit Startup Delay	R/W	sec	startdly	AV:153	10 to 600	STARTDLY
Unocc Free Cool Low Temp	R/W	°F	oatlufc	AV:287	-30 to 70	OATLUFC
Unoccupied Cool Setpoint	R/W	°F	ucsp	AV:8	65 to 95	UCSP
Unoccupied Heat Setpoint	R/W	°F	uhsp	AV:178	40 to 80	UHSP
Unoccupied Setpoint Gap	R/W		udb	AV:6004	0 to 55	UDB
Unoccupied SPRH Setpoint	READ ONLY	%	sprh_usp	AV:461	0 to 100	SPRH_USP
UnoccupiedZone Setpoint	R/W	°F	usp	AV:6005	40 to 95	USP
User Min Pos Pnt 1 Valid	READ ONLY		mp_upt1	AV:332	0 to 1	MP_UPT1
User Min Pos Pnt 2 Valid	READ ONLY		mp_upt2	AV:333	0 to 1	MP_UPT2
User Min Pos Pnt 3 Valid	READ ONLY		mp_upt3	AV:214	0 to 1	MP_UPT3
User Password	R/W		password	AV:181	0 to 9999	PASSWORD
Value of Prime variable	READ ONLY		prime_v	AV:39	-40 to 245	PRIME_V
Vent IDF Resets Count	READ ONLY		rs_ventf	AV:117	0 to 65535	RS_VENTF
Vent IDF Run Hours	READ ONLY	hrs	hour_vent_fan	AV:64	0 to 999999	HR_VENTF
Ventilation Fan Starts	READ ONLY		st_ventf	AV:152	0 to 999999	ST_VENTF
Zone Sensor 1 Address	R/W		zsaddr1	AV:8034	0x00 to 0xFF	ZSADDR1
Zone Sensor 2 Address	R/W		zsaddr2	AV:8035	0x00 to 0xFF	ZSADDR2
Zone sensor 3 address	R/W		zsaddr3	AV:8036	0x00 to 0xFF	ZSADDR3
Zone sensor 4 address	R/W		zsaddr4	AV:8037	0x00 to 0xFF	ZSADDR4
Zone sensor 5 address	R/W		zsaddr5	AV:8038	0x00 to 0xFF	ZSADDR5
Zone Sensor CO2 Level	READ ONLY	PPM	ZSZCO2	AV:1906	0 to 5000	ZSZCO2
Zone Sensor Humidity Out	R/W	%	zs_humidity	AV:9091	0 to 100	ZSSPRH
ZS Time Out	R/W	min	zsm_tmr	AV:9093	5 to 60	ZSM_TMR
ZS Zone Temp	R/W	°F	ZSZoneTemp	AV:1905	-40 to 245	ZSZT

Table Z — Binary Value (BV) Points

POINT DESCRIPTION	POINT ACCESS	UNITS	BACnet OBJECT NAME	BACnet ID	VALUE RANGE	CCN POINT EQUIVALENT
2-Pos Damper/ERV relay	R/W		erv_2pos	BV:6002	0 to 1	ERV_2POS
2Position/ERV Relay Test	R/W		s_erv2p	BV:457	0 to 1	S_ERV2P
A051 Cmp off expected ON	R/W		a_caoff	BV:181	0 to 1	
Act Mech Disconnect Alrt	R/W		a_dnmemd	BV:218	0 to 1	1
Air Quality CO2 Alerts	R/W		co2s_al	BV:307	0 to 1	CO2S_AL
Alarm Output Relay State	R/W		equip_alarm	BV:7048	0 to 1	ALMOUT
Alarm Output Relay Test	R/W		s_alarm	BV:70	0 to 1	S_ALARM
Alarm Reporting Enable	R/W		ALARMEN	BV:27	0 to 1	ALARMEN
ALC Auto Id Scheme	R/W		auid	BV:106	0 to 1	AUID
All Heat Stages Lockout	R/W		allhtloc	BV:122	0 to 1	ALLHTLOC
AUTO INDEPENDENT TEST	R/W		autoindp	BV:163	0 to 1	AUTOINDP
BACnet BMS Schedule	READ ONLY		bms_sced	BV:108	0 to 1	BMS_SCED
BACnet ID Auto ID	R/W		bac_auid	BV:107	0 to 1	BAC_AUID
BACnetCal Object Status	READ ONLY		calobjst	BV:110	0 to 1	CALOBJST
Bad DD Point-OutOfRange	R/W		f_bad_dd	BV:243	0 to 1	
CA1 DDF Fault	R/W		f_ca1ddf	BV:178	0 to 1	
CA1 FTP alert	R/W		a_ca1ftp	BV:182	0 to 1	
CA1 Rev Rotation alert	R/W		a_ca1rr	BV:179	0 to 1	
CCH Relay 1 State	READ ONLY		cch_relay	BV:3	0 to 1	CCHR1
Cir A DDF Fault	R/W		f_caddf	BV:168	0 to 1	
Cir A HDP alert	R/W		a_cahdp	BV:172	0 to 1	
Cir A HPS alert	R/W		a_cahps	BV:171	0 to 1	
Cir A LDP Alert	R/W		a_caldp	BV:236	0 to 1	
Cir A LSP Alert	R/W		a_calsp	BV:170	0 to 1	
Cir A Press Ratio Alert	R/W		a_capr	BV:169	0 to 1	
Cir A SSP out Rng Alert	R/W		a_badspa	BV:189	0 to 1	
Cir.A High Pressure Sw	READ ONLY		circa_hps	BV:4	0 to 1	CIRA_HPS
Circ A SDP Open Alert	R/W		a_opndpa	BV:191	0 to 1	
Circ A SDP range alert	R/W		a_baddpa	BV:183	0 to 1	
Circ A SDP Short Alert	R/W		a_shtdpa	BV:202	0 to 1	
Circ A SSP Open Alert	R/W		a_opnspa	BV:200	0 to 1	
Circuit A CMP A1 Loader	READ ONLY		cmpalena	BV:9	0 to 1	COMP_ALD
Circuit A Compressor 1	READ ONLY		cmpa1ena	BV:5	0 to 1	COMP_A1
Circuit A Locked Out	READ ONLY		ciralock	BV:128	0 to 1	CIRALOCK
Circuit A SSP Shrt Alert	R/W		a_shtspa	BV:211	0 to 1	
Ckt-A low charge fault	R/W		f_caloch	BV:167	0 to 1	
Clear Alarm History	R/W		alarm_hist_clear	BV:32	0 to 1	ALHISCLR
Cmp Bump Loader Test	R/W		s_bmpald	BV:64	0 to 1	S_BMPALD
COFS Switch State	R/W		condensate_switch	BV:7028	0 to 1	COFS
Compressor A1 Available	READ ONLY		ca1_aval	BV:123	0 to 1	CA1_AVAL
Compressor A1 Locked Out	READ ONLY		ca1_lock	BV:124	0 to 1	CA1_LOCK
Compressor A2 Shutdown	R/W		SDWN_A2	BV:459	0 to 1	SDWN_A2
Compressor Alerts	R/W		comp_alarm	BV:312	0 to 1	COMP_AL
Compressor Bump A1 Test	R/W		s_bmpa1	BV:71	0 to 1	S_BMPA1
CompressorStuck on Fault	R/W		f_cstuck	BV:241	0 to 1	
Condensate Ovrflow fault	R/W		f_cofs	BV:273	0 to 1	
CoolDemandLimiting	R/W		cooldmdLimit	BV:435	0 to 1	CDMLMOFF
Cooling W/Comp.A1 Test	R/W		s_coola1	BV:74	0 to 1	S_COOLA1
Cooling W/Comp.ALD Test	R/W		s_cola1d	BV:79	0 to 1	S_COLALD
Crankcase Heater 1 test	R/W		s_cchr1	BV:73	0 to 1	S_CCHR1
Currently Occupied	R/W		occ_status	BV:2008	0 to 1	OCCUPIED
Damper fdbk out of range	R/W		a_badec1	BV:184	0 to 1	
Damper fdbk Short Alert	R/W		a_shtec1	BV:203	0 to 1	
Damper Not Mod Alert	R/W		a_dnm	BV:215	0 to 1	
Damper Stuck Closed Alrt	R/W		a_dnm_sc	BV:216	0 to 1	
Damper Stuck Open Alert	R/W		a_dnm_so	BV:217	0 to 1	
Defrost Mode Active	READ ONLY		dfrstact	BV:467	0 to 1	DFRSTACT
Defrost Switch	READ ONLY		defrostswitch	BV:9002	0 to 1	DFRST_SW
Defrost Test	R/W		s_dfrst	BV:9004	0 to 1	S_DFRST
Diff. Dry Bulb Control	R/W		dif_db_ena	BV:41	0 to 1	DIFFBULB

Table Z — Binary Value (BV) Points (cont)

POINT DESCRIPTION	POINT ACCESS	UNITS	BACnet OBJECT NAME	BACnet ID	VALUE RANGE	CCN POINT EQUIVALENT
Diff. Enthalpy Control	R/W		dif_enth_ena	BV:42	0 to 1	DIFFENTH
dirty filter alert	R/W		a_dfilt	BV:214	0 to 1	
Dirty Filter Alerts	R/W		filter_alarm	BV:7017	0 to 1	FILT_AL
Dmpr fdbk Open Cir Alert	R/W		a_opnec1	BV:192	0 to 1	
Dry Bulb Lockout	R/W		db_lock_out	BV:40	0 to 1	DBLOCK
DST allowed?	R/W		dst_cfg	BV:93	0 to 1	DST_CFG
DST currently active	READ ONLY		dst_actv	BV:92	0 to 1	DST_ACTV
Econ Damper Calibration	R/W		s_ecocal	BV:9008	0 to 1	S_ECOCAL
Econ Damper Operational	READ ONLY		damp_good	BV:39	0 to 1	DAMPGOOD
Econo Actual Position	R/W		dmpr_err	BV:21	0 to 1	DAMP_ERR
Economizer Alerts	R/W		econ_alarm	BV:43	0 to 1	ECON_AL
Economizer Cooling	R/W		a_t24ewc	BV:226	0 to 1	
Economizer Not Cooling	R/W		a_t24enc	BV:224	0 to 1	
Enthalpy Lockout	R/W		enth_lock_out	BV:44	0 to 1	ENTHLOCK
Excess Outside Air Alert	R/W		a_t24eoa	BV:225	0 to 1	
Fan Off When Cmded On	R/W		f_idfoff	BV:230	0 to 1	
Fan On When Cmded Off	R/W		f_idfon	BV:231	0 to 1	
Fan On When Occupied	R/W		occupied_fan	BV:46	0 to 1	FANON_OC
fbdh sat locked out	READ ONLY		fbdsatlo	BV:439	0 to 1	FBDSATLO
FBDH SST locked out	READ ONLY		fbdsstlo	BV:440	0 to 1	FBDSSTLO
Filter Status Switch	R/W		flt_status	BV:1016	0 to 1	FILTSTAT
Fire shutdown fault	R/W		f_fire	BV:242	0 to 1	
Fire Shutdown Switch	R/W		firedown	BV:112	0 to 1	FIREDOWN
FST Open Circuit Alert	R/W		a_opnfst	BV:193	0 to 1	
FST out of Range Alert	R/W		a_badfst	BV:185	0 to 1	
FST Sensor Error	R/W		fst_error	BV:49	0 to 1	FST_ERR
FST Short Circuit Alert	R/W		a_shtfst	BV:204	0 to 1	
General Status alert	R/W		a_gensw	BV:244	0 to 1	
General Status Alerts	R/W		gens_al	BV:309	0 to 1	GENS_AL
General Status fault	R/W		f_gensw	BV:265	0 to 1	
General Status Switch	R/W		gen_status	BV:50	0 to 1	GENSTAT
Hardware Failures Alerts	R/W		hw_al	BV:305	0 to 1	HW_AL
Heat Stage 1 Available	READ ONLY		ht1_aval	BV:16	0 to 1	HT1_AVAL
Heat Stage 1 Relay	READ ONLY		hs1	BV:10	0 to 1	HEAT_1
Heat Stage 2 Available	READ ONLY		ht2_aval	BV:17	0 to 1	HT2_AVAL
Heat Stage 2 Relay	READ ONLY		hs2	BV:11	0 to 1	HEAT_2
HeatDemandLimiting	R/W		heatdmdLimit	BV:370	0 to 1	HDMLMOFF
Heating Failure Alerts	R/W		heat_al	BV:306	0 to 1	HEAT_AL
Heating Stage 1 Test	R/W		s_heat1	BV:76	0 to 1	S_HEAT1
Heating Stage 2 Test	R/W		s_heat2	BV:77	0 to 1	S_HEAT2
humidity ctrl is active	READ ONLY		humctrla	BV:423	0 to 1	
IAQ Open Circuit Alert	R/W		a_opniaq	BV:194	0 to 1	
IAQ override enable	R/W		iaq_override_en	BV:445	0 to 1	IAQOVREN
IAQ override sw state	R/W		iaqoverride_switch	BV:7030	0 to 1	IAQ_OVRS
IAQ Preoccupancy Purge	R/W		iaqpurge	BV:20	0 to 1	IAQPURGE
IAQ Sensor Error	R/W		iaq_err	BV:51	0 to 1	IAQ_ERR
IAQ Short Circuit Alert	R/W		a_shtiaq	BV:205	0 to 1	
IDF Manual Limit Fault	READ ONLY		f_idflsm	BV:278	0 to 1	
IDF Manual Transition	R/W		s_idftrn	BV:78	0 to 1	S_IDFTRN
IDF Operation Errors?	READ ONLY		idf_bad	BV:52	0 to 1	IDFBAD
IDF Speed Override Flag	READ ONLY		sfan_hand_alarm	BV:7009	0 to 1	FAN_OVRD
IDF Speed Reduction On	READ ONLY		fanred10	BV:7	0 to 1	FANRED10
IFM2OFEN	R/W		IFM2OFEN	BV:9086	0 to 1	IFM2OFEN
Ignition Failure Alert	R/W		a_noign	BV:222	0 to 1	
In Pre-Occupancy Purge?	READ ONLY		preoccon	BV:38	0 to 1	PREOCCON
Indoor Fan Alerts	R/W		idf_alarm	BV:45	0 to 1	FAN_AL
Is IAQ Override Active?	READ ONLY		iaq_ovrd	BV:164	0 to 1	IAQ_OVRD
Linkage Active	READ ONLY		link_active	BV:58	0 to 1	LNK_ACT
Liq Diverter Val Rly Tst	R/W		s_ldv_a	BV:281	0 to 1	S_LDV_A
LiqLine Solenoid Test	R/W		s_llsv	BV:9007	0 to 1	S_LLSV
Local Sched Occ Request	R/W		loc_occ	BV:95	0 to 1	LOC_OCC

Table Z — Binary Value (BV) Points (cont)

POINT DESCRIPTION	POINT ACCESS	UNITS	BACnet OBJECT NAME	BACnet ID	VALUE RANGE	CCN POINT EQUIVALENT
Low Ambient Enable	R/W		loamben	BV:7053	0 to 1	LOAMB_EN
Low cooling locked out	READ ONLY		lc_lock	BV:317	0 to 1	LC_LOCK
Low Discharge Diagnostic	R/W		disldpal	BV:469	0 to 1	DISLDPAL
Make Config Backup File	R/W		ddbckup	BV:129	0 to 1	DDBCKUP
MBB 24VDC Alert	R/W		a_mbb24d	BV:247	0 to 1	
MBB 5VDC Alert	R/W		a_mbb5dc	BV:248	0 to 1	
MBB EEPROM failure fault	R/W		f_mbbeep	BV:267	0 to 1	
MBB Fuse 2 Fault	R/W		f_mbbf2	BV:268	0 to 1	
MBB Fuse 3 Fault	R/W		f_mbbf3	BV:269	0 to 1	
MBB low voltage Fault	R/W		f_mbblov	BV:270	0 to 1	
MBB Ref Volt Fail Fault	R/W		f_mbbref	BV:271	0 to 1	
MBB RNET Voltage Alert	R/W		a_mbb12d	BV:246	0 to 1	
MBB zero crossing alert	R/W		a_mbb0x	BV:245	0 to 1	
Mechanical Cool active?	READ ONLY		mechcool	BV:301	0 to 1	MECHCOOL
Mechanical Heating	READ ONLY		mecht_en	BV:465	0 to 1	MECHT_EN
Mechanical Heating Test	R/W		s_mecht	BV:9005	0 to 1	S_MECHT
OACFM Alarm Relay	R/W		oacfm_rel_alarm	BV:371	0 to 1	OACFM_AL
OACFM Open Circuit Alert	R/W		a_opnoac	BV:276	0 to 1	
OACFM ShortCircuit Alert	R/W		a_shtoac	BV:277	0 to 1	
OAQ Open Circuit Alert	R/W		a_opnoaq	BV:195	0 to 1	
OAQ Short Circuit Alert	R/W		a_shtoaq	BV:206	0 to 1	
OARH Open Circuit Alert	R/W		a_opnorh	BV:197	0 to 1	
OARH Sensor Error	R/W		oarh_err	BV:60	0 to 1	OARH_ERR
OARH Short Circuit Alert	R/W		a_shtorh	BV:208	0 to 1	
OAT Open Circuit Alert	R/W		a_opnoat	BV:196	0 to 1	
OAT out of Range Alert	R/W		a_badoat	BV:186	0 to 1	
OAT Sensor Error	R/W		oat_error	BV:314	0 to 1	OAT_ERR
OAT Short Circuit Alert	R/W		a_shtoat	BV:207	0 to 1	
OAT Thermistor Alerts	R/W		oat_rel_alarm	BV:61	0 to 1	OATRL_AL
OccupiedStandBY	R/W		occstdby	BV:9094	0 to 1	OCCSTDBY
ODF Relay2 Test	R/W		s_ofr2	BV:9081	1 to 1	S_OFR2
ODF Relay3 Test	R/W		s_ofr3	BV:9082	0 to 1	S_OFR3
ODF Speed Relay Test	R/W		s_ofrspd	BV:6001	0 to 1	S_OFRSPD
Ok to fan based dehum	READ ONLY		oktofbd	BV:420	0 to 1	OKTOFBD
Ok to Dehumidify?	READ ONLY		oktodhum	BV:422	0 to 1	OKTODHUM
Ok to Preoccupancy Purge	READ ONLY		okpreocc	BV:35	0 to 1	OKPREOCC
OK to Run Heat	READ ONLY		oktoheat	BV:36	0 to 1	OKTOHEAT
OK to SupplyAirTempering	READ ONLY		oktotemp	BV:415	0 to 1	OKTOTEMP
Ok to Unocc Free Cool?	READ ONLY		oktoufc	BV:37	0 to 1	OKTOUFC
Ok to use compressors?	READ ONLY		okmechcl	BV:302	0 to 1	OKMECHCL
OK to Use Free Cooling?	READ ONLY		ok_free_cl	BV:65	0 to 1	OKFREECL
Outdoor Fan Relay 2	R/W		ofr2	BV:9076	0 to 1	OFR2
Outdoor Fan Relay 3	R/W		ofr3	BV:9077	0 to 1	OFR3
Outdoor Fan Speed Relay	R/W		ofr	BV:6000	0 to 1	OFR
Percent Enable/Disable	R/W		perc_bac	BV:303	0 to 1	PERC_BAC
Phase Monitor Fault	READ ONLY		f_phmon	BV:279	0 to 1	
Power Exhaust 1 Relay	R/W		pe1	BV:15	0 to 1	PE1
Power Exhaust 1 Test	R/W		s_pe_1	BV:82	0 to 1	S_PE_1
Power Exhaust 2 Relay	R/W		pe2	BV:66	0 to 1	PE2
Power Exhaust 2 Test	R/W		s_pe_2	BV:83	0 to 1	S_PE_2
RARH Open Circuit Alert	R/W		a_opnrrh	BV:199	0 to 1	
RARH Sensor Error	R/W		rarh_err	BV:67	0 to 1	RARH_ERR
RARH Short Circuit Alert	R/W		a_shtrrh	BV:210	0 to 1	
RAT Open Circuit Alert	R/W		a_opnrat	BV:198	0 to 1	
RAT out of Range Alert	R/W		a_badrat	BV:187	0 to 1	
RAT out of Range Alert	R/W		a_badsat	BV:188	0 to 1	
RAT Sensor Error	R/W		rat_err	BV:68	0 to 1	RAT_ERR
RAT Short Circuit Alert	R/W		a_shtrat	BV:209	0 to 1	
Refrig Dissipation Input	READ ONLY		leak_dtc	BV:9095	0 To 1	LEAK_DTC
Refrig Circuit Alerts	R/W		circuit_alarm	BV:313	0 to 1	CKT_AL
Remote Occupancy Switch	R/W		remocc	BV:29	0 to 1	REMOCC

Table Z — Binary Value (BV) Points (cont)

POINT DESCRIPTION	POINT ACCESS	UNITS	BACnet OBJECT NAME	BACnet ID	VALUE RANGE	CCN POINT EQUIVALENT
Remote shutdown fault	R/W		f_remoff	BV:272	0 to 1	
Remote Shutdown Switch	R/W		rem_shut	BV:9001	0 to 1	REMSHUT
Reset All Current Alarms	R/W		alarm_reset	BV:33	0 to 1	ALRESET
Reset Filter Timer	R/W		reset_filter_timer	BV:109	0 to 1	RESETFLT
Rev.Val. Sole. Cir.A Tst	R/W		s_rvs_a	BV:9006	0 to 1	S_RVS_A
RH sensor failure Alert	R/W		rhs_al	BV:308	0 to 1	RHS_AL
Rht Dischg Valve Rly Tst	R/W		s_rdv_a	BV:282	0 to 1	S_RDV_A
Rollout without Heating	R/W		f_ronoht	BV:235	0 to 1	
RUN AUTO COOLING TEST	R/W		autocool	BV:160	0 to 1	AUTOCOOL
RUN AUTO HEATING TEST	R/W		autoheat	BV:161	0 to 1	AUTOHEAT
RUN AUTO SYSTEM TEST	R/W		autosys	BV:162	0 to 1	AUTOSYS
Run away heat fault	R/W		f_hstuck	BV:266	0 to 1	0 to 1
SAT Sensor Error	R/W		sat_err	BV:84	0 to 1	SAT_ERR
SAT/RAT Sensor Alerts	R/W		sa_ra_alarm	BV:311	0 to 1	SATRATAL
SDPA Sensor Error	R/W		sdpa_err	BV:63	0 to 1	SDPA_ERR
Shut Down on IDF Failure	R/W		sfan_fail_alarm	BV:7008	0 to 1	FATALFAN
Shutdown A1 First	R/W		sdwn_a1	BV:449	0 to 1	SDWN_A1
Shutdown Loader First	R/W		sdwn_ald	BV:451	0 to 1	SDWN_ALD
Smoke Purge Input	R/W		purge	BV:80	0 to 1	PURGE
Space Sensors Alerts	R/W		space_alarm	BV:103	0 to 1	SPACE_AL
SPRH Open Circuit Alert	R/W		a_opnsrh	BV:274	0 to 1	
SPRH Sensor Error	R/W		sprh_err	BV:9090	0 to 1	SPRH_ERR
SPRH Short Circuit Alert	R/W		a_shtsrh	BV:275	0 to 1	
SPT Open Circuit Alert	R/W		a_opnspt	BV:201	0 to 1	
SPT Sensor Error	R/W		space_err	BV:7001	0 to 1	SPT_ERR
SPT Short Circuit Alert	R/W		a_shtspt	BV:212	0 to 1	
SPTO Sensor Error	R/W		stpt_err	BV:7002	0 to 1	SPTO_ERR
SPToutofRangeAlert	R/W		a_badspt	BV:190	0 to 1	
SSPA Sensor Error	R/W		sspa_err	BV:89	0 to 1	SSPA_ERR
Start Config Restore	READ ONLY		ddrstre	BV:130	0 to 1	DDRSTRE
Supply Air Temper Enable	R/W		sup_air_temp_en	BV:410	0 to 1	SATEMPEN
System Demand Alarm	R/W		sys_dmd_alarm	BV:26	0 to 1	SYSDMDAL
Temp Compensate Start On	READ ONLY		tcs_Act	BV:133	0 to 1	TCS_ACT
Thermostat Alerts	R/W		tstat_al	BV:104	0 to 1	TSTAT_AL
Thermostat G Input	R/W		g_input	BV:1021	0 to 1	G
Thermostat W1 Input	R/W		w1_input	BV:1017	0 to 1	W1
Thermostat W2 Input	R/W		w2_input	BV:1018	0 to 1	W2
Thermostat Y1 Input	R/W		y1_input	BV:1019	0 to 1	Y1
Thermostat Y2 Input	R/W		y2_input	BV:1020	0 to 1	Y2
TIME range alert	R/W		a_notime	BV:237	0 to 1	
Today Is A Holiday	READ ONLY		holtoday	BV:98	0 to 1	HOLTODAY
Tomorrow Is A Holiday	READ ONLY		hol_tmrw	BV:96	0 to 1	HOL_TMRW
Transducer Sensor Alerts	R/W		trans_al	BV:310	0 to 1	TRANS_AL
Tstat Adaptive Staging	R/W		adptstat	BV:115	0 to 1	ADPTSTAT
TSTAT Cool alert	R/W		a_impcl	BV:220	0 to 1	
TSTAT Heat alert	R/W		a_impht	BV:221	0 to 1	
TSTAT Heat Cool alert	R/W		a_simhc	BV:223	0 to 1	
Unocc Free Cool Active	READ ONLY		ufc_act	BV:135	0 to 1	UFC_ACT
USB Find Restore File	R/W		backfile	BV:111	0 to 1	BACKFILE
User Password Protection	R/W		pass_ebl	BV:100	0 to 1	PASS_EBL
ZS Motion Sensor	R/W		zs_motion	BV:9088	0 to 1	ZSZM

Table AA — Multi-State Value (MSV) Points

POINT DESCRIPTION	POINT ACCESS	UNITS	BACnet OBJECT NAME	BACnet ID	VALUE RANGE	CCN POINT EQUIVALENT
Active Occupancy control	READ ONLY		occ_ctrl	MSV:14	0 to 6	OCC_CTRL
Active Type of Heat	READ ONLY		htsrctyp	MSV:2004	0 to 6	HTSRCTYP
Alert from thermostat	READ ONLY		tstat_alert	MSV:8	0 to 65535	THM_ALT
Analog Input IAQ Control	R/W		iaqancfg	MSV:25	0 to 3	IAQANCFG
Backup and Restore	READ ONLY		bac_rest	MSV:44	0 to 2	
BACnet BMS baud rate	READ ONLY		bac_baud	MSV:18	0 to 5	BAC_BAUD
BAS Protocol Select	R/W		bms_cfg	MSV:11	0 to 2	BMS_CFG
BMS Occupancy Request	R/W		bms_occ	MSV:12	1 to 3	BMS_OCC
Communications status	R/W		e0commst	MSV:17	0 to 1	E0COMMST
Comp. Framework	R/W		sysvtype	MSV:2003	0 to 2	SYSVTYPE
Cool demand Limit Level	R/W		cdlm_level	MSV:56	0 to 3	CDMDLLEV
Fan Based Dehum Type	R/W		fbd_type	MSV:58	0 to 2	FBD_TYPE
Fan Status SW Type	R/W		fanstcfg	MSV:451	0 to 2	FANSTCFG
Filter Status Sw Channel	R/W		filter_channel	MSV:41	0 to 5	FILTCHAN
Filter Status Switch Type	R/W		filt_cfg	MSV:42	0 to 2	FILT_CFG
Firmware Release State	READ ONLY		fw_state	MSV:19	0 to 2	FW_STATE
Heat demand Limit Level	R/W		hdlm_level	MSV:57	0 to 3	HDMDLLEV
IAQ override sw channel	R/W		iaqo_sw_chan	MSV:444	0 to 5	IAQOCHAN
Keep configuration	R/W		keepconf	MSV:47	0 to 2	KEEPCONF
Linkage Occupied Request	R/W		lnk_occ	MSV:13	0 to 2	LNK_OCC
ODF State	R/W		odfstate	MSV:452	0 to 3	ODFSTATE
Operation Status Color	READ ONLY		color	MSV:9	0 to 15	COLOR
Remote Occupancy Channel	R/W		rmocchan	MSV:46	0 to 5	RMOCCHAN
Remote Occupancy Sw Type	R/W		rmoc_cfg	MSV:45	0 to 1	RMOC_CFG
Running Mode Operation	READ ONLY		sub_mode	MSV:43	0 to 99	SUB_MODE
System Demand	READ ONLY		sys_demand_enum	MSV:101	0 to 255	SYS_DMDE
System Mode	READ ONLY		sys_mode	MSV:2002	0 to 2	SYSMODE
Test Inactivity Time Out	R/W		test_ito	MSV:156	0 to 2	TEST_ITO
Thermostat Hardware Type	R/W		tstat_type	MSV:5	0 to 3	STATTYPE
Type of Heat Installed	R/W		ht_type	MSV:16	0 to 2	HEATTYPE
Unit Control Type	R/W		control_type	MSV:2	0 to 2	CTRLTYPE
Ventilation Method	R/W		venttype	MSV:453	0 to 4	VENTTYPE
Ventilation Status	READ ONLY		ventstat	MSV:6	0 to 9	VENTSTAT
When to Unocc Free Cool?	R/W		ufc_cfg	MSV:24	0 to 2	UFC_CFG
ZS motion sensor cfg	R/W		zsm_cfg	MSV:9077	0 to 3	ZSM_CFG

Table AB — String Value (SV) Points

POINT DESCRIPTION	POINT ACCESS	UNITS	BACnet OBJECT NAME	BACnet ID	VALUE RANGE	CCN POINT EQUIVALENT
Application SW Version	READ ONLY		fw_cesr	String	a to z, A to Z, 0 to 9 and -	FW_CESR
BACnet Firmware Version	R/W		bac_fwv	String	a to z, A to Z, 0 to 9 and -	BAC_FWV
Base Board serial number	READ ONLY		bd_ser	String	a to z, A to Z, 0 to 9 and -	BD_SER
Bootloader SW Version	READ ONLY		bl_cesr	String	a to z, A to Z, 0 to 9 and -	BL_CESR
Device Description	READ ONLY		dev_desc	String	a to z, A to Z, 0 to 9 and -	DEV_DESC
Device Location	READ ONLY		dev_loc	String	a to z, A to Z, 0 to 9 and -	DEV_LOC
Equipment Model number	READ ONLY		eq_mod	String	a to z, A to Z, 0 to 9 and -	EQ_MOD
Equipment Serial number	READ ONLY		eq_ser	String	a to z, A to Z, 0 to 9 and -	EQ_SER
MBB Part Number	READ ONLY		bd_cepl	String	a to z, A to Z, 0 to 9 and -	BD_CEPL
MBB Program Part Number	READ ONLY		bd_cepp	String	a to z, A to Z, 0 to 9 and -	BD_CEPP
ProgramLocationProperty	R/W		progloc	String	a to z, A to Z, 0 to 9 and -	PROGLOC
ProgramObject Name	R/W		progname	String	a to z, A to Z, 0 to 9 and -	PROGNAME
Reference Number	READ ONLY		ref_num	String	a to z, A to Z, 0 to 9 and -	REF_NUM
Ventilation Status	READ ONLY		venttext	String	a to z, A to Z, 0 to 9 and -	VENTTEXT

CONTROL SET POINT AND CONFIGURATION LOG

MODEL NO: _____ SOFTWARE VERSION: _____

SERIAL NO: _____ MBB: CESR131805-_____

DATE: _____

TECHNICIAN: _____

INDICATE UNIT SETTINGS BELOW

CONTROL TYPE: Thermostat/T-55 Space Temp./T-56 Space Temp./T-59 Space Temp.

SETPOINT: Cooling Occupied: _____ Unoccupied: _____

Heating Occupied: _____ Unoccupied: _____

Table AC — Main Menu Layout

DISPLAY TEXT	EXPANDED DISPLAY TEXT	VALUES	UNITS	DEFAULT	POINT	ENTRY
SETTINGS	Settings Menu					
SPACE SET POINTS	Space Setpoints Adjustment Menu					
OCC COOL SETPOINT	Occupied Cool Setpoint	55 to 80	°F	78	OCSP	
OCC HEAT SETPOINT	Occupied Heat Setpoint	55 to 80	°F	68	OHSP	
UNOCC COOL SETPNT	Unoccupied Cool Setpoint	65 to 95	°F	85	UCSP	
UNOCC HEAT SETPNT	Unoccupied Heat Setpoint	40 to 80	°F	60	UHSP	
HEAT-COOL SP GAP	Heat-Cool Setpoint Gap	2 to 10	°F delta	5	HCSP_GAP	
SPT SLIDER RANGE	SPT Offset Range (+/-)	0 to 5	°F	5	SPTO_RNG	
OCC SPRH SETPOINT	Occupied SPRH Setpoint	0 to 100	%	50	SPRH_OSP	
UNOCC SPRH SET PT	Unoccupied SPRH Setpoint	0 to 100	%	80	SPRH_USP	
SPRH RH DEADBAND	Space RH Deadband	2 to 20	%	8	SPRH_DB	
SA TEMPERING SP	SA tempering Set point	35 to 80	°F	55	SATEMPSP	
TEMP DEMAND CONFIG	Temperature Demand Configuration menu					
LOW COOL DMD ON	Low Cool Demand On	-1 to 2	°F	0.5	DMDLCON	
HIGH COOL DMD ON	High Cool Demand On	0.5 to 20	°F	1.5	DMDHCON	
LOW COOL DMD OFF	Low Cool Demand Off	-1 to 2	°F	-0.5	DMDLCOFF	
COOL DMD LEVEL UP	Cool Demand Level Up	-2 to 2	°F	-0.2	CDMD_LUP	
LOW HEAT DMD ON	Low Heat Demand On	-1 to 2	°F	0.5	DMDLHON	
HIGH HEAT DMD ON	High Heat Demand On	0.5 to 20	°F	2	DMDHHON	
LOW HEAT DMD OFF	Low Heat Demand Off	-1 to 2	°F	-0.5	DMDLHOFF	
HEAT DMD LEVEL UP	Heat Demand Level Up	-2 to 2	°F	-0.2	HDMD_LUP	
DEMAND TIMEGUARD1	Space Demand Time Guard1	60 to 600	sec	120	TDMD_TG1	
DEMAND TIMEGUARD2	Space Demand Time Guard2	0 to 600	sec	240	TDMD_TG2	
DEMAND TIMEGUARD3	Space Demand Time Guard3	5 to 120	min	10	TDMD_TG3	
DMD LIMIT CONFIG	DEMAND LIMIT CONFIG					
COOL DMD LIM LEV1	COOL DMD Offset level 1	0 to 99	°F	1	CLDOLEV1	
COOL DMD LIM LEV2	COOL DMD Offset level 2	0 to 99	°F	3	CLDOLEV2	
COOL DMD LIM LEV3	COOL DMD Offset level 3	0 to 99	°F	5	CLDOLEV3	
HEAT DMD LIM LEV1	Heat DMD Offset level 1	0 to 99	°F	1	HTDOLEV1	
HEAT DMD LIM LEV2	Heat DMD Offset level 2	0 to 99	°F	3	HTDOLEV2	
HEAT DMD LIM LEV3	Heat DMD Offset level 3	0 to 99	°F	5	HTDOLEV3	
CLOCK	CLOCK ADJUSTMENT MENU					
DATE	Current Date	MM/DD/YYYY			DATE	
TIME	Clock Hour and Minute	xx:xx	hh.mm		TIME	
DAYLIGHT SAVINGS	Daylight Savings Configuration Menu					
DAYLIGHT SAVINGS?	DST allowed?	Enable/Disable		Enable	DST_CFG	

Table AC — Main Menu Layout (cont)

DISPLAY TEXT	EXPANDED DISPLAY TEXT	VALUES	UNITS	DEFAULT	POINT	ENTRY
DST START MONTH	DST Start Month	1=JANUARY, 2=FEBRUARY, 3=MARCH, 4=APRIL, 5=MAY, 6=JUNE, 7=JULY, 8=AUGUST, 9=SEPTEMBER, 10=OCTOBER, 11=NOVEMBER, 12=DECEMBER		3	STARTM	
DST START WEEK	DST Start Week	1 to 5		2	STARTW	
DST START DAY	DST Start Day	1=MONDAY, 2=TUESDAY, 3=WEDNESDAY, 4=THURSDAY, 5=FRIDAY, 6=SATURDAY, 7=SUNDAY		7	STARTD	
DST MINS TO ADD	DST Minutes to Add	0 to 90	min	60	MINADD	
DST STOP MONTH	DST Stop Month	1=JANUARY, 2=FEBRUARY, 3=MARCH, 4=APRIL, 5=MAY, 6=JUNE, 7=JULY, 8=AUGUST, 9=SEPTEMBER, 10=OCTOBER, 11=NOVEMBER, 12=DECEMBER		11	STOPM	
DST STOP WEEK	DST Stop Week	1 to 5		1	STOPW	
DST STOP DAY	DST Stop Day	1=MONDAY, 2=TUESDAY, 3=WEDNESDAY, 4=THURSDAY, 5=FRIDAY, 6=SATURDAY, 7=SUNDAY		7	STOPD	
DST MINS TO SUB	DST Minutes to Subtract	0 to 90	min	60	MINSUB	
START TIME IN DAY	Time in day to start DST	0 to 600	min	120	DST_TOD	
SCHEDULES	SCHEDULES ADJUST-MENT MENU					
SCHEDULE NUMBER	CCN Schedule Number	0=Always Occupied, 1-64=Local Schedule, 65-99=Global Schedule		0=Always Occupied	SCHEDNUM	
OCCUPANCY SCHEDULE	OCCUPANCY SCHEDULE DATA					
HOLIDAY ADJUSTMENT MENU	Holiday adjustment Menu					
ALLOW G. HOLIDAY?	Accept Global Holidays?	Yes/No		No	HOLIDAYT	
TIMED OVR LENGTH	Timed Override Duration	0 to 4	hrs	4	OTL_CFG	
CAN CANCEL T.OVR	Allow SPT Ovrd Cancel	Yes/No		No	CLROVCFG	
UNIT CONFIGURATIONS	UNIT CONFIGURATIONS MENU					
GENERAL	General Unit Configurations Menu					
STARTUP DELAY	Unit Startup Delay	10 to 600	sec	30	STARTDLY	
UNIT CONTROL TYPE	Unit Control Type	0=TSTAT, 1=SPACE SEN, 2=RAT SEN		0=TSTAT	CTRLTYPE	
THERMOSTAT TYPE	Thermostat Hardware Type	0=CONV 2C2H, 1=DIGI 2C2H, 2=CONV 3C2H, 3=DIGI 3C2H		0=CONV 2C2H	STATTYPE	
VENT METHOD	Ventilation Method	0=NONE, 1=ECON, 2=2POS DMPR, 3=ERV, 4=ECON ERV		0: No FIOP 1: Economizer FIOP 2: Two Position Damper FIOP	VENTTYPE	

Table AC — Main Menu Layout (cont)

DISPLAY TEXT	EXPANDED DISPLAY TEXT	VALUES	UNITS	DEFAULT	POINT	ENTRY
2POS/ERV CHANNEL	2-Pos Damper/ ERV Channel	0=NONE, 1=MBB RLY11, 2=MBB RLY06		0: No FIOP 2: FIOP	EV2PCHAN	
ADAPTIVE TSTAT	Tstat Adaptive Staging	Yes/No		Yes	ADPTSTAT	
DIRTY FILTER TIME	Change Filter Timer	0 to 9999	hrs	0	FILTLIFE	
TEST MODE TIMEOUT	Test inactivity time out	0=Disabled, 1=30 minutes, 2=1 hour, 3=2 hours, 4=4 hours, 5=8 hours, 6=12 hours		4	TEST_ITO	
CCH MAX TEMP	CCH Max Temperature	40 to 90	°F	65	CCHMAXT	
STD BARO PRESSURE	Std Barometric Pressure	13 to 35	in. Hg	29.92	STD_BARP	
LINK STAGEUP TIME	Linkage Stage inc. time	60 to 600	sec	180	LSTAGINC	
UNIT'S MAX SAT	Unit's Maximum SAT	130 to 210	°F	200	UMAX_SAT	
UNIT'S MIN SAT	Unit's Minimum SAT	30 to 70	°F	32	UMIN_SAT	
AUTO SAT FAULTS?	Auto Clr SAT Limit Fault	Yes/No		Yes	SATLACLR	
SA FREEZE PROTECT	SAT Freeze Protection	Enable/Disable		Enable	SATFZPRO	
ADAPTIVE TCS?	Adaptive Temp Comp Start	Enable/Disable		Disable	TCS_CFG	
USER TCS BIASTIME	User TCS Start Bias Time	0 to 180	min	0	TCSUBIAS	
SWITCH INPUTS CONFIGS	DI Config Menu					
FIRE SW CHANNEL	Fire Switch Channel	0=None, 1=MBB DI12, 2=MBB DI13, 3=MBB DI14, 4=MBB DI02, 5=MBB DI03, 6=MBB Y3		0: No FIOP 5: FIOP	FIRECHAN	
FIRE SHUTDOWN SW	Fire Shutdown Sw Type	0=NORM OPEN, 1=NORM CLSD		0=NORM OPEN	FIRE_CFG	
HUMSTAT CHANNEL	Humidistat Status Chan.	0=None, 1=MBB DI12, 2=MBB DI13, 3=MBB DI14, 4=MBB DI02, 5=MBB DI03, 6=MBB Y3		0=None	HUMD-CHAN	
HUMSTAT SW TYPE	Humidistat Switch Type	0=NORM OPEN, 1=NORM CLSD,		0=NORM OPEN	HUMD_CFG	
FILTER SW CHANNEL	Filter Status Sw Channel	0=None, 1=MBB DI12, 2=MBB DI13, 3=MBB DI14, 4=MBB DI02, 5=MBB DI03, 6=MBB Y3		0: No FIOP 1: FIOP	FILTCHAN	
FILTER SW TYPE	Filter Status Switch Type	0=NORM OPEN, 1=NORM CLSD		0=NORM OPEN	FILT_CFG	
REMOTE OCC CHAN	Remote Occupancy Chan-nel	0=None, 1=MBB DI12, 2=MBB DI13, 3=MBB DI14, 4=MBB DI02, 5=MBB DI03, 6=MBB Y3		0=None	RMOC-CHAN	
REMOTE OCC TYPE	Remote Occupancy Sw Type	0=NORM OPEN, 1=NORM CLSD		0=NORM OPEN	RMOC_CFG	
REM.SHUTDOWN CHAN	Remote Shutdown Channel	0=None, 1=MBB DI12, 2=MBB DI13, 3=MBB DI14, 4=MBB DI02, 5=MBB DI03, 6=MBB Y3		0=None	ROFFCHAN	
REM.SHUTDOWN SW T	Remote Shutdown SW Type	0=NORM OPEN, 1=NORM CLSD		0=NORM OPEN	ROFF_CFG	
REM.SHUTDOWN TYPE	Remote Shutdown ALM Type	0=Normal, 1=Emergency		0=Normal	ROFFTYPE	

Table AC — Main Menu Layout (cont)

DISPLAY TEXT	EXPANDED DISPLAY TEXT	VALUES	UNITS	DEFAULT	POINT	ENTRY
COFS CHANNEL	COFS Assigned Channel	0=None, 1=MBB DI12, 2=MBB DI13, 3=MBB DI14, 4=MBB DI02, 5=MBB DI03, 6=MBB Y3		0: No FIOP 4: FIOP	COFSCHAN	
COFS TYPE	COFS Switch Type	0=NORM OPEN, 1=NORM CLSD		1=NORM CLSD	COFS_CFG	
GEN STATUS CHAN	General Status Channel	0=None, 1=MBB DI12, 2=MBB DI13, 3=MBB DI14, 4=MBB DI02, 5=MBB DI03, 6=MBB Y3		0=None	GEN_CHAN	
GEN STAT SW TYPE	General Status Sw Type	0=NORM OPEN, 1=NORM CLSD		0=NORM OPEN	GENS_CFG	
SHUTDOWN GEN STAT	General Status shutdown?	Yes/No		Yes	GENFATAL	
ENTHALPY SW CHAN	Enthalpy Sw Channel	0=None, 1=MBB DI12, 2=MBB DI13, 3=MBB DI14, 4=MBB DI02, 5=MBB DI03, 6=MBB Y3		0=NONE	ENTHCHAN	
ENTHALPY SW TYPE	Enthalpy Switch Type	0=NORM OPEN, 1=NORM CLSD		0=NORM OPEN	ENTH_CFG	
FAN STAT CHANNEL	Fan Status Channel	0=None, 1=MBB DI12, 2=MBB DI13, 3=MBB DI14, 4=MBB DI02, 5=MBB DI03, 6=MBB Y3		0=NONE	FNSTCHAN	
FAN STAT SW CFG	Fan Status SW Type	0=NORM OPEN, 1=NORM CLSD		0=NORM OPEN	FANSTICFG	
IAQ OVERIDE SW CH	IAQ override sw channel	0=None, 1=MBB DI12, 2=MBB DI13, 3=MBB DI14, 4=MBB DI02, 5=MBB DI03, 6=MBB Y3		0=NONE	IAQOCHAN	
IAQ OVRRD SW TYPE	IAQ Override Switch Type	0=NORM OPEN, 1=NORM CLSD		0=NORM OPEN	IAQOSCFG	
PHASE MON CHANNEL	Phase Monitor Channel	0=None, 1=MBB DI12, 2=MBB DI13, 3=MBB DI14, 4=MBB DI02, 5=MBB DI03, 6=MBB Y3		0: No FIOP 3: FIOP	PMR_CHAN	
PHASE MON SW TYPE	Phase Monitor SW Type	0=NORM OPEN, 1=NORM CLSD		1=NORM CLSD	PMR_CFG	
SMOKE PURGE CHAN	Smoke Purge Sw Channel	0=None, 1=MBB DI12, 2=MBB DI13, 3=MBB DI14, 4=MBB DI02, 5=MBB DI03, 6=MBB Y3		0=NONE	PURGCHAN	
SMOKE PURGE TYPE	Smoke Purge Switch Type	0=NORM OPEN, 1=NORM CLSD		0=NORM OPEN, 1=NORM CLSD	PURG_CFG	
SMOKE PRESS CHAN	Smoke Pressure Sw Chan	0=None, 1=MBB DI12, 2=MBB DI13, 3=MBB DI14, 4=MBB DI02, 5=MBB DI03, 6=MBB Y3		0=NONE	PRESCHAN	
SMOKE PRESS TYPE	Smoke Pressure Sw Type	0=NORM OPEN, 1=NORM CLSD		0=NORM OPEN	PRES_CFG	

Table AC — Main Menu Layout (cont)

DISPLAY TEXT	EXPANDED DISPLAY TEXT	VALUES	UNITS	DEFAULT	POINT	ENTRY
SMOKE EVAC CHAN	Smoke Evacuation Sw Chan	0=None, 1=MBB DI12, 2=MBB DI13, 3=MBB DI14, 4=MBB DI02, 5=MBB DI03, 6=MBB Y3		0=NONE	EVACCHAN	
SMOKE EVAC TYPE	Smoke Evacuation Sw Type	0=NORM OPEN, 1=NORM CLSD		0=NORM OPEN	EVAC_CFG	
ANALOG INPUT CONFIGS	Analog Inputs Configuration Menu					
SPRH SENS CHANNEL	SPRH Assigned Channel	0=None, 1=MBB AI06, 2=MBB AI07, 3=MBB AI08		0=NONE	SPRHCHAN	
SPRH RH @ 4MA	SPRH Sensor Value at 4mA	0 to 100	%	0	SPRH_4MA	
SPRH RH @ 20MA	SPRH Sensor Value at 20mA	0 to 100	%	100	SPRH20MA	
IAQ SENSOR CHAN	IAQ Assigned Channel	0=None, 1=MBB AI06, 2=MBB AI07, 3=MBB AI08		0: No FIOP 2:FIOP	IAQ_CHAN	
IAQ PPM @ 4MA	IAQ Sensor Value at 4mA	0 to 5000	PPM	0	IAQ_4MA	
IAQ PPM @ 20MA	IAQ Sensor Value at 20mA	0 to 5000	PPM	2000	IAQ_20MA	
OAQ SENSOR CHAN	OAQ Assigned Channel	0=None, 1=MBB AI06, 2=MBB AI07, 3=MBB AI08		0=NONE	OAQ_CHAN	
OAQ PPM @ 4MA	OAQ Sensor Value at 4mA	0 to 5000	PPM	0	OAQ_4MA	
OAQ PPM @ 20MA	OAQ Sensor Value at 20mA	0 to 5000	PPM	2000	OAQ_20MA	
OARH SENSOR CHAN	OARH Assigned Channel	0=None, 1=MBB AI06, 2=MBB AI07, 3=MBB AI08		0: No FIOP 3: FIOP	OARHCHAN	
OARH RH @ 4MA	OARH Sensor Value at 4mA	0 to 100	%	0	OARH_4MA	
OARH RH @ 20MA	OARH Sensor Val. at 20mA	0 to 100	%	100	OARH20MA	
RARH SENS CHANNEL	RARH Assigned Channel	0=None, 1=MBB AI06, 2=MBB AI07, 3=MBB AI08		0=NONE	RARHCHAN	
RARH RH @ 4MA	RARH Sensor Value at 4mA	0 to 100	%	0	RARH_4MA	
RARH RH @ 20MA	RARH Sensor Value at 20mA	0 to 100	%	100	RARH20MA	
OACFM SENSOR CHAN	OACFM Assigned Channel	0=None, 1=MBB AI06, 2=MBB AI07, 3=MBB AI08		0=NONE	OCFM-CHAN	
OACFM @ 4MA	OACFM value at 4MA	0 to 2000	CFM	0	OCFM_4MA	
OACFM @ 20MA	OACFM Value at 20mA	2000 to 5000	CFM	2000	OCFM20MA	
COOLING	Cooling Configurations Menu					
COOL STAGEUP TIME	Cool Stage Increase Time	120 to 999	sec	450	CSTAGINC	
COOL SATTREND LEV	Cooling SAT Trend Level	-1 to 1		-0.2	SAT_TLC	
UPPER MIN SAT	Cool Min SAT Upper Level	35.0 to 65.0	°F	56	SATMIN_H	
LOWER MIN SAT	Cool Min SAT Lower Level	35.0 to 65.0	°F	46	SATMIN_L	
COOL FANOFF DELAY	Cooling Fan-Off Delay	0 to 600	sec	60	COOL_FOD	
ODF HIGH SPD TIME	ODF High Speed Time	0 to 300	sec	120	MINODFTM	
FAN BASED DEHUM	Fan Based Dehum CFG Menu					
FBD CONTROL TYPE	Fan Based Dehum Type	0=NONE, 1=Comfort, 2=Max		0=NONE	FBD_TYPE	
FBD COOL DELTA	FBDH Low Set Point	-20 to 0	°F delta	-2.5	FBDLO_SP	
FBD MAX SST SP	FBDH Max Mode SST SP	20 to 60	°F	38	FBDSSTSP	
FBD SST MIN VALUE	FBDH Min SST Threshold	10 to 60	°F	32	FBDH_SST	
FBD CMFT SAT SP	FBDH Comfort SAT SP	35 to 80	°F	46	FBDH_SAT	
FBD CMFT SAT DT	FBD Comfort SAT Delta	0 to 30	°F	11	FBDSATDT	
FBD MIN FAN SPD	FBDH Min Fan Speed	0 to 3000	RPM	same as IDF VENT SPD (see page 168)	FDRPMMIN	

Table AC — Main Menu Layout (cont)

DISPLAY TEXT	EXPANDED DISPLAY TEXT	VALUES	UNITS	DEFAULT	POINT	ENTRY
FBD MAX FAN SPD	FBDH Max Fan Speed	0 to 3000	RPM	same as IDF HIGH COOL SPD (See page 167)	FDRPMMAX	
LOW AMBIENT	LOW AMBIENT CONFIGS MENU					
CIR.A LOCKOUT OAT	Circuit A Lockout Temp	xx.x	°F		OATLCMPA	
LOW COOL MIN OAT	Low Cool lockout Temp	-20 to 60	°F	10	LCLOCKSP	
LOW AMBIENT TEMP	Low Ambient Temperature	0 to 80	°F	70: 50FEQ 24-28 66: 50FEQ 04-07, 50GEQ 04-06 60: 50FEQ 08-17, 50GEQ 07-17 40: 50FEQ 14, 50GEQ 12	LA_TEMP	
LOW AMBIENT TEMP2	Low Ambient Temp2	0 to 80	°F	40	LA_TEMP2	
HEATING	Heating Configurations Menu					
TIME BTWN DEFROST	Min Time BTWN Defrosts	30 to 120	min	60	MINDFINT	
MAX DEFROST TIME	Defrost Max Duration	5 to 25	min	10	MAXDFTMR	
HEAT STAGEUP TIME	Heat Stage Increase Time	120 to 999	sec	450	HSTAGINC	
HEAT SATTREND LEV	Heating SAT Trend Level	-1 to 1		0.2	SAT_TLH	
LOWER MAX SAT	Heat Max SAT Lower Level	85 to 200	°F	140: All except below 105: Sizes 17-28	SATMAX_L	
UPPER MAX SAT	Heat Max SAT Upper Level	85 to 200	°F	170: All except below 115: Sizes 17-28	SATMAX_H	
HEAT FANOFF DELAY	Heating Fan-Off Delay	10 to 600	sec	60	HEAT_FOD	
HEAT LOCKOUT OAT	Heating Lockout Temp	40 to 125	°F	75	OATLHEAT	
MEC HEATLOCK TEMP	Mech Heat Lockout Temp	-30 to 40	°F	-8	OATLMECH	
LLSV ON TIME	LiquidLine Valve On Time	0 to 300	sec	60	LLSV_CT	
SAT DURING HEAT?	SAT heat mode sensing	Enable/Disable		Enable	SAT_HEAT	
SA TEMPER ENABLED	Supply Air Temper Enable	Yes/No		No	SATEMPEN	
SA TEMPERING SP	SA tempering Set point	35 to 80	°F	55	SATEMPSP	
TEMPER MAX OAT	Max OAT for SA tempering	40 to 80	°F	65	OATSTEMP	
START DEFROST DLY	Startup Defrost Delay	0 to 120	min	5	DFHLD_T	
ELECTRIC HEAT	Electric Heat Setting Menu					
HEATING STAGE QTY	Number Of Heating Stages	0 to 3		1	NUMHSTGS	
MAX OAT FOR 3STGS	Max OAT for 3 Heat Stags	0 to 90	°F	20	HT2LCTMP	
HEAT MIN ON	Heat Minimum On Time	60 to 600	sec	120	H_MINON	
HEAT MIN OFF	Heat Minimum Off Time	60 to 600	sec	120	H_MINOFF	
PREHEAT W/O IDF?	Pre-Heat HX without IDF?	Enable/Disable		Disable	PREHT_HX	
PREHEAT FAN DELAY	Pre-Heat Fan On Delay	0 to 120	sec	30	PREHT_TM	
COMPRESSOR DIAG	COMPRESSOR DIAGNOSTIC MENU					
COMP MIN ON TIME	Compressor Min On Time	180 to 600	sec	300	C_MINON	
COMP MIN OFF TIME	Compressor Min Off Time	120 to 600	sec	180	C_MINOFF	
STRIKE CLEAR TIME	Runtime to Reset Strikes	120 to 999	sec	300	MIN_ON_S	
CHARGE DIAGNOSTICS	Refrigerant Charge Diagnostic Config Menu					
LOW CHARGE LEVEL	Low Refrig Charge Level	0 to 150	PSI	50	LOCHARGE	
NO LOW CHARGE OAT	Low Charge Disable Temp	-40 to 50	°F	10	LOCH_LOT	
CIR.A SDP LIMIT	CirA High Pressure Limit	400 to 700	PSI	670: 50FEQ04-07, 50GEQ04-06 600: 50FEQ08-30, 50GEQ07-28	HIPLIM_A	
LOW DISCHARGE LEV	Low Discharge Level	0 to 20	°F	0	SDTLEV	
LOW DISCHRGE DIAG	Low Discharge Diagnostic	Enable/Disable		Disable	DISLDPAL	
MIN PRESS RATIO	Minimum Pressure Ratio	0 to 5		1.35	MINPSI_R	
LOW SUCTION DIAG.	Low Suction Diagnostic Config Menu					
LOW SUC OK TEMP	Suction OK Temperature	10 to 50	°F	18	SSTOK	
LOW SUC LEVEL 1	Low Suction Level 1 Temp	10 to 50	°F	20	SSTLEV1	
LOW SUC LEVEL 2	Low Suction Level 2 Temp	5 to 50	°F	15	SSTLEV2	
LOW SUC LEVEL 3	Low Suction Level 3 Temp	0 to 50	°F	10	SSTLEV3	
LO SUC DIAG DELAY	Delay On Low SST Check	0 to 300	sec	0	SSTCKDLY	

Table AC — Main Menu Layout (cont)

DISPLAY TEXT	EXPANDED DISPLAY TEXT	VALUES	UNITS	DEFAULT	POINT	ENTRY
HEAT LO SUC OFFST	Heat Low Suc Lvl Offset	0 to 100	°F	30	SSTOFSET	
COMPRESSOR TRANSISTION	Compressor Transition diagnostic config menu					
COMP L2 DIAG DLY	Comp Level 2 Diag Delay	1 to 300	sec	15	CDDTLEV2	
CIR STUCK ON DIAG	Circuit Stuck On Diag.	Enable/Disable		Enable	DCKTOFF	
CIR.A MIN DIS.P	Min discharge change	0 to 99	PSI	8	MDP_DISA	
CIR.A MIN SUC.P	Min Suction change	0 to 99	PSI	10	MDP_SUCA	
OFF P.RATIO	CirA P.Ratio off change	-1 to 1		-0.3	OFFPR_A	
DEFROST UEOFF DLY	Comp UEOFF Diag Delay	0 to 300	sec	30	ACAOFF_T	
INDOOR FAN	Indoor Fan Configurations Menu					
OCCUPIED FAN?	Fan On When Occupied	Yes/No		Yes	FANON_OC	
IDF MAX SPEED	IDF Maximum Fan Speed	0 to 100	%	100	SPEEDMAX	
IDF VENT SPD	IDF Vent Speed-RPM	0 to 3000	RPM	1281: Size 04 Medium Static Fan 1457: Size 04 High Static Fan 1269: Size 05 Medium Static Fan 1439: Size 05 High Static Fan 230v 1 ph 1556: Size 05 High Static Fan 230v 3ph, 460v, 575v 1398: Size 06 Medium Static Fan 1556: Size 06 High Static Fan 230v 1 ph 1659: Size 06 High Static Fan 230v 3ph, 460v, 575v 1302: Size 07 Medium Static Fan 1460: FEQ 07 High Static Fan 780: FEQ 08-12 Std/Med Static Fan 858: FEQ 08-12 High Static Fan 936: Size 17-24 Std/Med Static Fan 1030: Size 17-24 High Static Fan 858: FEQ 14 1030: FEQ 28 936: GEQ 07-12 Std/Med Static 1030: GEQ 07-12 High Static	RPM_VENT	
IDF HEAT SPD	IDF Heat Speed-RPM	0 to 3000	RPM	same as IDF HIGH COOL SPD (See page 159)	RPM_HEAT	

Table AC — Main Menu Layout (cont)

DISPLAY TEXT	EXPANDED DISPLAY TEXT	VALUES	UNITS	DEFAULT	POINT	ENTRY
IDF HIGH COOL SPD	IDF High Cool Speed-RPM	0 to 3000	RPM	1708: Size 04 Medium Static Fan 1942: Size 04 High Static Fan 1693: Size 05 Medium Static Fan 1919: Size 05 High Static Fan 230v 1 ph 2075: Size 05 High Static Fan 230v 3ph, 460v, 575v 1864: Size 06 Medium Static Fan 2075: Size 06 High Static Fan 230v 1 ph 2212: Size 06 High Static Fan 230v 3ph, 460v, 575v 1973: FEQ 07 Medium Static Fan 2212: Size 07 High Static Fan 1560: Size 08-12, 17-24 Std/ Med Static Fan 1716: Size 08-12, 17-24 High Static Fan, 1716: Size 14 and 28 1560: GEQ 07-12 Std/Med Static 1716: GEQ 07-12 High Static	RPM_HCL	
IDF FREE COOL SPD	IDF Free Cool Speed-RPM	0 to 3000	RPM	same as IDF VENTL SPD (see Page 158)	RPM_FCL	
FAULT ON ERROR	Shut Down on IDF Failure	Yes/No		Yes	FATALFAN	
ECONOMIZER	Economizer Configurations Menu					
VENT METHOD	Ventilation Method	0=NONE, 1=ECON, 2=2POS DMPR, 3=ERV, 4=ECON ERV		0: No FIOP 1: Economizer FIOP 2: Two Position Damper FIOP	VENTTYPE	
ECON MAX POS	Econ Max Damper Position	0 to 100	%	100	DAMPMAX	
ECON TRAVEL TIME	Economizer Travel Time	5 to 300	sec	150	ECONOTRV	
MINIMUM POSITION CONFIGS	Minimum Position Configurations menu					
MIN POS @ MAX FAN	Econ Min at Max Fanspeed	0 to 100	%	30	MINP_MAX	
MIN POS SPEED 1	Min Pos - User Speed 1	0 to 100	%	0	MP_USPD1	
MIN POS DAMP 1	Min Pos - User Pos 1	0 to 100	%	0	MP_UPOS1	
MIN POS SPEED 2	Min Pos - User Speed 2	0 to 100	%	0	MP_USPD2	
MIN POS DAMP 2	Min Pos - User Pos 2	0 to 100	%	0	MP_UPOS2	
MIN POS SPEED 3	Min Pos - User Speed 3	0 to 100	%	0	MP_USPD3	
MIN POS DAMP 3	Min Pos - User Pos 3	0 to 100	%	0	MP_UPOS3	

Table AC — Main Menu Layout (cont)

DISPLAY TEXT	EXPANDED DISPLAY TEXT	VALUES	UNITS	DEFAULT	POINT	ENTRY
FREE COOL CONFIGS	Free Cooling Specific Configurations Menu					
LOW COOL SAT SP	LowFree Cool SAT Setpnt	40 to 80	°F	65	LCSASP	
HIGH COOL SAT SP	High FreeCool SAT Setpnt	40 to 80	°F	55	HCSASP	
FREE COOL MAX OAT	Free Cooling Max OAT	0 to 90	°F	65	MAXFREET	
FREE COOL MIN OAT	Free Cooling Min Temp	-30 to 70	°F	0	MINFREET	
DIFF DRY BULB CTL	Diff. Dry Bulb Control	Enable/Disable		Disable	DIFFBULB	
DIFF DB DEADBAND	Diff. Dry Bulb Deadband	0 to 20	°F	3	OATRATDB	
ENTHALPY HI LIMIT	Max Enthalpy OA limit	1 to 99	BTU/LB	28	FREEMAXE	
DIFF ENTHALPY CTL	Diff. Enthalpy Control	Enable/Disable		Disable	DIFFENTH	
ENTHALPY DEADBAND	Enthalpy Cross Deadband	0 to 20	BTU/LB	2	OAERAEDB	
UNOCCUPIED FREE COOL	Unoccupied Free Cooling Configs Menu					
WHEN TO UNOCC FC	When to Unocc Free Cool?	0=Disabled, 1=PreOcc, 2=Unocc		1=PreOcc	UFC_CFG	
UFC PREOCC TIME	UFC PreOcc Time	1 to 999	min	120	UFCTIME	
UFC LOW TEMP	Unocc Free Cool Low Temp	-30 to 70	°F	50	OATLUFC	
POWER EXHAUST CONFIGS	Power Exhaust Configura-tions Menu					
PE1 RELAY CHANNEL	PE1 Relay Channel	0=NONE, 1=MBB RLY11, 2=MBB RLY06		0: no FIOP 2: FIOP	PE1_CHAN	
PE1 POS @ MAX SPD	PE Stage 1 at Max speed	0 to 100	%	40	PE1_PMAX	
PE OFF DEADBAND	PE Turn Off Dead band	0 to 100	%	5	PE_OFFDB	
PE2 RELAY CHANNEL	PE2 Relay Channel	0=NONE, 1=MBB RLY11, 2=MBB RLY06		0=NONE	PE2_CHAN	
PE2 POS @ MAX SPD	PE Stage 2 at Max Speed	0 to 100	%	75	PE2_PMAX	
ECON ACT MECH DISC DIAG	Econ Actuator Mechanical disconnect diagnostic menu					
MDD-H/C END DLY	T24 Heat/Cool End Delay	0 to 60	min	25	T24CHDLY	
MDD-MIN MOVE	T24Econ Min Move for SAT	10 to 20	%	10	T24ECSTS	
MDD-SAT DB	Damper SAT deadband	0 to 20	°F	12	T24SATDB	
MDD-MIN RAT-OAT	T24 Min Diff in RAT-OAT	5 to 20	°F	15	T24RATDF	
MDD-MIN TEST POS	T24 Test Minimum Pos	0 to 100	%	15	T24TSTMN	
MDD-MAX TEST POS	T24 Test Maximum Pos	0 to 100	%	85	T24TSTMX	
AIR QUALITY	Air Quality Configurations Menu					
ANALOG IAQ CTRL	Analog Input IAQ Control	0=NO IAQ, 1=DCV, 2=IAQ OVRD, 3=CTRL MINP		0: no FIOP 1: FIOP	IAQANCFG	
IAQ POS @ MAX SPD	IAQ Position at Max Fan	0 to 100	%	10	IAQMINP	
LOW AIR.Q DIFF	AQ Differential Low	0 to 5000		100	DAQ_LOW	
HGH AIR.Q DIFF	AQ Differential High	0 to 5000		700	DAQ_HIGH	
PREOCC PURGE ENBL	IAQ Preoccupancy Purge	Yes/No		Yes	IAQPURGE	
PURGE POS @ MAX	IAQ Purge Pos at Max IDF	0 to 100	%	40	IAQPMAX	
PREOCC LOW LIMIT	Preocc Purge Lockout OAT	0 to 70	°F	50	IAQP_LA	
PREOCC PURGE TIME	Preocc Purge Duration	5 to 120	min	15	IAQPTIME	
AQ DIF HI-IAQ OVR	AQ Diff High IAQOVER-RIDE	0 to 5000	PPM	700	AQD_HIGH	
AQ DIF LO-IAQ OVR	AQ Diff Low-IAQ OVERRIDE	0 to 5000	PPM	100	AQD_LOW	
IAQ OVRRD ENABLE	IAQ override enable	Yes/No		No	IAQOVREN	
SW IAQ FAN CTRL	Switch Input IAQ Fan ctl	0=Never, 1=Occupied, 2=Always		0=Never	IAQSWFAN	
AI IAQ FAN CTRL	Analog Input IAQ Fan ctl	0=Never, 1=Occupied, 2=Always		0=Never	IAQANFAN	
AQ OVR POSITION	IAQ Override Position	0 to 100	%	100	IAQOVPOS	

Table AC — Main Menu Layout (cont)

DISPLAY TEXT	EXPANDED DISPLAY TEXT	VALUES	UNITS	DEFAULT	POINT	ENTRY
ALARM RELAY	Alarm Relay Configurations Menu					
ALM RELAY CHANNEL	ALM Relay Assigned Chan	0=NONE, 1=MBB RLY11, 2=MBB RLY06		1=MBB RLY11	ALM_CHAN	
THERMOSTAT ALERTS	Thermostat Alerts	Yes/No		Yes	TSTAT_AL	
HARDWARE ALERTS	Hardware Failures Alerts	Yes/No		Yes	HW_AL	
SAT/RAT ALERTS	SAT/RAT Sensor Alerts	Yes/No		Yes	SATRATAL	
OAT SENSOR ALERTS	OAT Thermistor Alerts	Yes/No		Yes	OATRL_AL	
SPACE SENS ALERTS	Space Sensors Alerts	Yes/No		Yes	SPACE_AL	
TRANSDUCER ALERTS	Transducer Sensor Alerts	Yes/No		Yes	TRANS_AL	
RH SENSOR ALERTS	RH sensor failure Alert	Yes/No		Yes	RHS_AL	
CO2 SENSOR ALERTS	Air Quality CO2 Alerts	Yes/No		Yes	CO2S_AL	
OACFM SENS ALERTS	OACFM Alarm Relay	Yes/No		No	OACFM_AL	
ECONOMIZER ALERTS	Economizer Alerts	Yes/No		Yes	ECON_AL	
AIR FILTER ALERTS	Dirty Filter Alerts	Yes/No		Yes	FILT_AL	
GEN STATUS ALERTS	General Status Alerts	Yes/No		Yes	GENS_AL	
REFRIG CIR ALERTS	Refrig Circuit Alerts	Yes/No		Yes	CKT_AL	
COMPRESSOR ALERTS	Compressor Alerts	Yes/No		Yes	COMP_AL	
HEATING ALERTS	Heating Failure Alerts	Yes/No		Yes	HEAT_AL	
INDOOR FAN ALERTS	Indoor Fan Alerts	Yes/No		Yes	FAN_AL	
ON ACTIVE FAULTS	Relay On Active Faults	Yes/No		Yes	FAULT_AL	
SERVICE CONFIG MENU	Service Configuration Menu					
UNIT SIZE	Unit Model Number Size	0 to 255		Match Model Size: 04, 05, 06, 07, 08, 09, 12, 14, 17, 24, 28	UNITSIZE	
LOW COOL OFFSET	LOW COOL OFFSET	0 to 100	%	100: FEQ sizes 04-06 75: GEQ sizes 04-06 66: FEQ size 07, GEQ size 12 60: FEQ sizes 17-28 50: FEQ sizes 08-14, GEQ sizes 07-09	LCLOFSET	
IFM2 OFFSET	INDOOR MOTOR2 OFFSET	0 to 100	%	15	1FM2OFST	
IFM2 OFST ENABLE	INDOOR MOTOR2 OFF-SET EN	Enable/Disable		Disable: All except below Enable: Horizontal sizes 17-28	IFM2OPEN	
CMP FRAMEWORK	Compressor Framework	0=1CIR 2CMP, 1=1CMP+LDR, 2=1CMP		0: 08-28; GEQ 07 1: GEQ 04-06 2: 50FEQ 04-06	SYSVTYPE	
SHUTDWN A1 FIRST	Comp A1 Shutdown First	Yes/No		No	SDWN_A1	
SHUTDWN A2 FIRST	Comp A2 Shutdown First	Yes/No		Yes	SDWN_A2	
SHUTDWN ALD FIRST	Comp Loader Shutdown 1st	Yes/No		Yes: All except below No: 50FEQ 04-06	SDWN_ALD	

Table AC — Main Menu Layout (cont)

DISPLAY TEXT	EXPANDED DISPLAY TEXT	VALUES	UNITS	DEFAULT	POINT	ENTRY
IDF CURVE LO RPM	IDF Curve Low End RPM	0 to 3000	RPM	219: Size 04 Medium Static Fan 249: Size 04 High Static Fan 217: Size 05 Medium Static Fan 246: Size 05 High Static Fan 230v 1 ph 266: Size 05 High Static Fan 230v 3ph, 460v, 575v 239: Size 06 Medium Static Fan 266: Size 06 High Static Fan 230v 1 ph 284: Size 06 High Static Fan 230v 3 ph, 460v, 575v 253: Size 07 Medium Static Fan 284: Size 07 High Static Fan 250: Size 08-28 and GEQ 07	IFMLORPM	
IDF CURVE HI RPM	IDF Curve High End RPM	0 to 3000	RPM	2190: Size 04 Medium Static Fan 2490: Size 04 High Static Fan 2170: Size 05 Medium Static Fan 2460: Size 05 High Static Fan 230v 1 ph 2660: Size 05 High Static Fan 230v 3ph, 460v, 575v 2390: Size 06 Medium Static Fan 2660: Size 06 High Static Fan 230v 1 ph 2836: Size 06 High Static Fan 230v 3ph, 460v, 575v 2530: Size 07 Medium Static Fan 2836: Size 07 High Static Fan 2000: Size 08-12 and 17-24 Std/Med Static fan 2200: Size 08-12 and 17-24 Std/Med Static Fan 2200: Size 14 and 28 2000: GEQ 07-12 Std/Med Static 2200: GEQ 07-12 High Static	IFMHIRPM	
CCH RELAY1 ENABLE	CCH Relay 1 Enabled	Yes/No		Yes	CCHR1_EN	
ECONO PID - KP	ECONO PID - KP	0.00 to 99.90		2.5	ECONO_P	
ECONO PID - KI	ECONO PID - KI	0.00 to 99.90		0.12	ECONO_I	
ECONO PID - KD	ECONO PID - KD	0.00 to 99.90		1	ECONO_D	
ECONO PID - RATE	ECONO PID - RATE	10 to 180	sec	15	ECONO_DT	
FBD PID - KP	FBD PID - Kp	0 to 99.99		0.01	FBDPID_P	

Table AC — Main Menu Layout (cont)

DISPLAY TEXT	EXPANDED DISPLAY TEXT	VALUES	UNITS	DEFAULT	POINT	ENTRY
FBD PID - KI	FBD PID Ki	0 to 99.999		0	FBDPID_I	
FBD PID - KD	FBD PID Kd	0 to 99.999		0	FBDPID_D	
FBD KI RES VAL	FBD Ki Reset Val.	0.00 to 99.90		0	FBDKIRES	
ODF CONTROL SCHEME	ODF Control Scheme	0=NO_CTL 1=1RLY_ECM 2=1RLY_STGC 3=2RLY_OAT 4=3RLY_OAT 5=3RLY_ECM		0: FEQ sizes 04-07 1: None 2: GEQ04-06 3: FEQ sizes 08-28, GEQ sizes 07,08,12 4: None 5: FEQ12, GEQ09	ODF_CTL	
NEW HARDWARE	Quick Menu for New Hardware					
UNIT CONTROL TYPE	Unit Control Type	0=TSTAT, 1=SPACE SEN, 2=RAT SEN		0=TSTAT	CTRLTYPE	
VENT METHOD	Ventilation Method	0=NONE, 1=ECON, 2=2POS DMPR, 3=ERV, 4=ECON ERV		0: No FIOP 1: Economizer FIOP 2: Two Position Damper FIOP	VENTTYPE	
SPRH SENS CHANNEL	SPRH Assigned Channel	0=None, 1=MBB AI06, 2=MBB AI07, 3=MBB AI08		0=NONE	SPRHCHAN	
IAQ SENSOR CHAN	IAQ Assigned Channel	0=None, 1=MBB AI06, 2=MBB AI07, 3=MBB AI08		0: no FIOP 2: FIOP	IAQ_CHAN	
OAQ SENSOR CHAN	OAQ Assigned Channel	0=None, 1=MBB AI06, 2=MBB AI07, 3=MBB AI08		0=NONE	OAQ_CHAN	
OARH SENSOR CHAN	OARH Assigned Channel	0=None, 1=MBB AI06, 2=MBB AI07, 3=MBB AI08		0: no FIOP 3: FIOP	OARHCHAN	
RARH SENS CHANNEL	RARH Assigned Channel	0=None, 1=MBB AI06, 2=MBB AI07, 3=MBB AI08		0=NONE	RARHCHAN	
OACFM SENS CHANNEL	OACFM Assigned Channel	0=None, 1=MBB AI06, 2=MBB AI07, 3=MBB AI08, 4=SIOB AI10		0=NONE	OCFMCHAN	
FIRE SW CHANNEL	Fire Switch Channel	0=None, 1=MBB DI12, 2=MBB DI13, 3=MBB DI14, 4=MBB DI02, 5=MBB DI03, 6=MBB Y3		0: No FIOP 5: FIOP	FIRECHAN	
HUMSTAT CHANNEL	Humidistat Status Chan.	0=None, 1=MBB DI12, 2=MBB DI13, 3=MBB DI14, 4=MBB DI02, 5=MBB DI03, 6=MBB Y3		0=NONE	HUMDCHAN	
FILTER SW CHANNEL	Filter Status Sw Channel	0=None, 1=MBB DI12, 2=MBB DI13, 3=MBB DI14, 4=MBB DI02, 5=MBB DI03, 6=MBB Y3		0: No FIOP 1: FIOP	FILTCHAN	
REMOTE OCC CHAN	Remote Occupancy Channel	0=None, 1=MBB DI12, 2=MBB DI13, 3=MBB DI14, 4=MBB DI02, 5=MBB DI03, 6=MBB Y3		0=NONE	RMOCCHAN	

Table AC — Main Menu Layout (cont)

DISPLAY TEXT	EXPANDED DISPLAY TEXT	VALUES	UNITS	DEFAULT	POINT	ENTRY
REM.SHUTDOWN CHAN	Remote Shutdown Channel	0=None, 1=MBB DI12, 2=MBB DI13, 3=MBB DI14, 4=MBB DI02, 5=MBB DI03, 6=MBB Y3		0=NONE	ROFFCHAN	
COFS CHANNEL	COFS Assigned Channel	0=None, 1=MBB DI12, 2=MBB DI13, 3=MBB DI14, 4=MBB DI02, 5=MBB DI03, 6=MBB Y3		0: No FIOP 4: FIOP	COFSCHAN	
GEN STATUS CHAN	General Status Channel	0=None, 1=MBB DI12, 2=MBB DI13, 3=MBB DI14, 4=MBB DI02, 5=MBB DI03, 6=MBB Y3		0=NONE	GEN_CHAN	
ENTHALPY SW CHAN	Enthalpy Sw Channel	0=None, 1=MBB DI12, 2=MBB DI13, 3=MBB DI14, 4=MBB DI02, 5=MBB DI03, 6=MBB Y3		0=NONE	ENTHCHAN	
FAN STAT CHANNEL	Fan Status Channel	0=None, 1=MBB DI12, 2=MBB DI13, 3=MBB DI14, 4=MBB DI02, 5=MBB DI03, 6=MBB Y3		0=NONE	FNSTCHAN	
IAQ OVERIDE SW CH	IAQ override sw channel	0=None, 1=MBB DI12, 2=MBB DI13, 3=MBB DI14, 4=MBB DI02, 5=MBB DI03, 6=MBB Y3		0=NONE	IAQOCHAN	
PHASE MON CHANNEL	Phase Monitor Channel	0=None, 1=MBB DI12, 2=MBB DI13, 3=MBB DI14, 4=MBB DI02, 5=MBB DI03, 6=MBB Y3		0: No FIOP 3: FIOP	PMR_CHAN	
SMOKE PURGE CHAN	Smoke Purge Sw Channel	0=None, 1=MBB DI12, 2=MBB DI13, 3=MBB DI14, 4=MBB DI02, 5=MBB DI03, 6=MBB Y3		0=NONE	PURGCHAN	
SMOKE PRESS CHAN	Smoke Pressure Sw Chan	0=None, 1=MBB DI12, 2=MBB DI13, 3=MBB DI14, 4=MBB DI02, 5=MBB DI03, 6=MBB Y3		0=NONE	PRESCHAN	
SMOKE EVAC CHAN	Smoke Evacuation Sw Chan	0=None, 1=MBB DI12, 2=MBB DI13, 3=MBB DI14, 4=MBB DI02, 5=MBB DI03, 6=MBB Y3		0=NONE	EVACCHAN	
NETWORK SETTINGS	Building Network Configurations Menu					
BAS PROTOCOL	BAS Protocol Select	0=NONE, 1=CCN, 2=BACNET		0=NONE	BMS_CFG	
NETWORK TIMEOUT	Network Input Timeout	0 to 600	min	30	NETINTO	
CCN	CCN Network Configuration Menu					

Table AC — Main Menu Layout (cont)

DISPLAY TEXT	EXPANDED DISPLAY TEXT	VALUES	UNITS	DEFAULT	POINT	ENTRY
BUS NUMBER	CCN Bus Number	0 to 239		0	CCNBUS	
CCN ELEMENT #	CCN Element Number	1 to 239		1	CCNADD	
CCN BAUDRATE	CCN Baud Rate	0=9600, 1=19200, 2=38400		2=38400	BAUDENUM	
BROADCAST ACK?	CCN Broadcast Ack'er	Yes/No		No	CCNBCACK	
BROADCAST SCHEDL?	Global Schedule Broadcst	Yes/No		No	CCN_GSBC	
BROADCAST TIME?	CCN Time Broadcast	Yes/No		No	CCNBC	
BROADCAST OAT?	Broadcast OAT On Network	Yes/No		No	OATBC	
BROADCAST OARH?	Broadcast OARH On Network	Yes/No		No	OARHBC	
BROADCAST OAQ?	Broadcast OAQ On Network	Yes/No		No	OAQBC	
BROADCAST IAQ?	Broadcast IAQ On Network	Yes/No		No	IAQBC	
ALLOW G. OVERRIDE	Allow Global Overrides	Yes/No		Yes	GLBLOVER	
LOCATION	Device Location	text			DEV_LOC	
REFERENCE NUMBER	Reference number	text			REF_NUM	
BACNET	BACnet network configuration menu					
MAC ADDRESS	BACnet Device Mac address	1 to 127		01	BAC_MAC	
BACNET BAUDRATE	BACnet BMS baud rate	0=9600, 1=19200, 2=38400, 3=57600, 4=76800, 5=115200		4=76800	BAC_BAUD	
AUTO ID SCHEME	ALC Auto Id Scheme	Yes/No		Yes	AUID	
BACNET AUTO ID	BACnet ID Auto ID	Yes/No		Yes	BAC_AUID	
BACNET ID	BACnet ID Number	0 to 4194302		1610101	BAC_ID	
LINKAGE SETTINGS	LINKAGE SETTINGS MENU					
DEVICE IAQ	BACnet device for IAQ	0 to 4194303		1610100	DEVIAQ	
OBJECT ID IAQ	Object instance for IAQ	0 to 9999		1009	OBJIAQ	
COV IAQ	Change of value for IAQ	0 to 60		0	COVIAQ	
DEVICE OAQ	BACnet device for OAQ	0 to 4194303		1610100	DEVOAQ	
OBJECT ID OAQ	Object instance for OAQ	0 to 9999		1012	OBJOAQ	
COV OAQ	Change of value for OAQ	0 to 60		0	COVOAQ	
DEVICE OARH	BACnet device for OARH	0 to 4194303		1610100	DEVOARH	
OBJECT ID OARH	Object instance for OARH	0 to 9999		1022	OBJOARH	
COV OARH	Change of value for OARH	0 to 60		0	COVOARH	
DEVICE OAT	BACnet device for OAT	0 to 4194303		1610100	DEVOAT	
OBJECT ID OAT	Object instance for OAT	0 to 9999		1003	OBJOAT	
COV OAT	Change of value for OAT	0 to 60		0	COVOAT	
DEVICE RARH	BACnet device for RARH	0 to 4194303		1610100	DEVRARH	
OBJECT ID RARH	Object instance for RARH	0 to 9999		30	OBJRARH	
COV RARH	Change of value for RARH	0 to 60		0	COVRARH	
DEVICE RAT	BACnet device for RAT	0 to 4194303		1610100	DEVRAT	
DBJECT ID RAT	Object instance for RAT	0 to 9999		1010	OBJRAT	
COV RAT	Change of value for RAT	0 to 60		0	COVRAT	
OEVICE SPT	BACnet device for SPT	0 to 4194303		1610100	DEVSPT	
OBJECT ID SPT	Object instance for SPT	0 to 9999		2007	OBJSPT	
COV SPT	Change of value for SPT	0 to 60		0	COVSPT	
LOCAL_SHEDL_EDIT	Allow Local Sched Edit	Yes/No	enum	No	LCL_EDIT	
SYSTEM TOUCH	System Touch Menu					
DEVICE INSTANCE	System Touch Device Inst	0 to 4194303		160099	DEVST	
POLLING RATE	System Touch Poll Rate	0 to 60		0	POLLST	
SPACE TEMP AI	System Touch AI for SPT	0 to 9999		1	AISTSPT	
SPACE RH AI	System Touch AI for SPRH	0 to 9999		4	AISTSPRH	

Table AC — Main Menu Layout (cont)

DISPLAY TEXT	EXPANDED DISPLAY TEXT	VALUES	UNITS	DEFAULT	POINT	ENTRY
ZS SENSOR CFG	ZS Sensor Configuration					
ZS1 ADDRESS	Zone Sensor 1 Address	0 to 255		255	ZSADDR1	
ZS2 ADDRESS	Zone Sensor 2 Address	0 to 255		255	ZSADDR2	
ZS3 ADDRESS	Zone sensor 3 address	0 to 255		255	ZSADDR3	
ZS4 ADDRESS	Zone sensor 4 address	0 to 255		255	ZSADDR4	
ZS5 ADDRESS	Zone sensor 5 address	0 to 255		255	ZSADDR5	
ZSM SENSOR CFG	ZS motion sensor cfg	0=NONE, 1=REMLOC, 2=LOCOC 3=TEMP_ONLY		1=REMCOC	ZSM_CFG	
ZS TIME OUT	ZS Time Out	5 to 60	min	5	ZSM_TMR	
ZS POLL RATE	Zone sensor poll rate	1 to 100	sec	5	ZSPOLLRT	
ZS UNIT	Zone sensor unit	0=degrees F		0=degrees F	ZSUNIT	
ZS FRC UNOC ENBL	ZS Force Unoccup enable	Yes/No		No	ZSFUNEN	
ZS FRC UNOC DELAY	ZS Force unocc wt delay	Yes/No		No	ZSFUNWT	
ZS TLO CONT ENBL	ZS TLO Cont Enable	Yes/No		No	ZSTLOEN	
TLO SET DURING OC	ZS TLO set during occ	Yes/No		No	ZSTLSOC	
ZS UI MODE	Zone sensor UI Mode	1=Dual Offsets		1=Dual Offsets	ZSUIM	
NETWORK CHKLIST	NETWORK SETUP CHECKLIST	0=Undone, 1=Perfom, 2=Done		0=Undone	CHK_NET	
DISPLAY SETTINGS	User Display Configurations Menu					
METRIC DISPLAY	Metric Display	Yes/No		No	DISPUNIT	
LANGUAGE	Display Language Select	0=English, 1=Spanish		0=English	LANGUAGE	
CONTRAST ADJUST	LCD Contrast Adjustment	1 to 10		5	LCD_CONT	
PASSWORD ENABLE?	User Password Protection	Enable/Disable		Enable	PASS_EBL	
VIEW USER PASSWORD	View User Password Menu					
CHANGE USER PASSWORD	Change User Password Menu					
DATE	Current Date	MM/DD/YYYY			DATE	
TIME	Clock Hour and Minute	xx:xx			TIME	
STARTUP DELAY	Unit Startup Delay	10 to 600	sec	30	STARTDLY	
UNIT CONTROL TYPE	Unit Control Type	0=TSTAT, 1=SPACE SEN, 2=RAT SEN		0=TSTAT	CTRLTYPE	
THERMOSTAT TYPE	Thermostat Hardware Type	0=CONV 2C2H, 1=DIGI 2C2H, 2=CONV 3C2H, 3=DIGI 3C2H		0=CONV 2C2H	STATTYPE	
DIRTY FILTER TIME	Change Filter Timer	0 to 9999	hrs	0	FILTLIFE	
TIME BTWN DEFROST	Min Time BTWN Defrosts	30 to 120	min	60	MINDFINT	
HEATING STAGE QTY	Number of Heating Stages	0 to 2		1	NUMHSTGS	
VENT METHOD	Ventilation Method	0=NONE, 1=ECON, 2=2POS DMPR, 3=ERV, 4=ECON ERV		0: No FIOP 1: Economizer FIOP 2: Two Position Damper FIOP	VENTTYPE	
FREE COOL MAX OAT	Free Cooling Max OAT	0 to 90	°F	65	MAXFREET	
FIRE SW CHANNEL	Fire Switch Channel	0=None, 1=MBB DI12, 2=MBB DI13, 3=MBB DI14, 4=MBB DI02, 5=MBB DI03, 6=MBB Y3		0: No FIOP 5: FIOP	FIRECHAN	

Table AC — Main Menu Layout (cont)

DISPLAY TEXT	EXPANDED DISPLAY TEXT	VALUES	UNITS	DEFAULT	POINT	ENTRY
IDF HIGH COOL SPD	IDF High Cool Speed-RPM	0 to 3000	RPM	1708: Size 04 Medium Static Fan 1942: Size 04 High Static Fan 1693: Size 05 Medium Static Fan 1919: Size 05 High Static Fan 230v 1 ph 2075: Size 05 High Static Fan 230v 3ph, 460v, 575v 1864: Size 06 Medium Static Fan 2075: Size 06 High Static Fan 230v 1 ph 2212: Size 06 High Static Fan 230v 3ph, 460v, 575v 1973: FEQ 07 Medium Static Fan 2212: Size 07 High Static Fan 1560: Size 08-12, 17-24 Std/ Med Static Fan 1716: Size 08-12, 17-24 High Static Fan 1716: Size 14 and 28 1560: GEQ 07-12 Std/Med Static 1716: GEQ 07-12 High Static	RPM_HCL	

Table AC — Main Menu Layout (cont)

DISPLAY TEXT	EXPANDED DISPLAY TEXT	VALUES	UNITS	DEFAULT	POINT	ENTRY
IDF VENT SPD	IDF Vent Speed-RPM	0 to 3000	RPM	1281: Size 04 Medium Static Fan 1457: Size 04 High Static Fan 1269: Size 05 Medium Static Fan 1439: Size 05 High Static Fan 230v 1 ph 1556: Size 05 High Static Fan 230v 3ph, 460v, 575v 1398: Size 06 Medium Static Fan 1556: Size 06 High Static Fan 230v 1 ph 1659: Size 06 High Static Fan 230v 3ph, 460v, 575v 1302: FEQ 07 Medium Static Fan 1460: FEQ 07 High Static Fan 780: FEQ 08-12 Std/Med Static Fan 858: FEQ 08-12 High Static Fan 936: Size 17-24 Std/Med Static Fan 1030: Size 17-24 High Static Fan 858: FEQ 14 1030: FEQ 28 936: GEQ 07-12 Std/Med Static 1030: GEQ 07-12 High Static	RPM_VENT	
IDF HEAT SPD	IDF Heat Speed-RPM	0 to 3000	RPM	same as IDF HIGH COOL SPD (on page 167)	RPM_HEAT	
QUICK SET CHKLIST	QUICK SETUP CHECKLIST	0=Undone, 1=Perfom, 2=Done		0=Undone	CHK_QUIK	

© 2024 Carrier

UNIT START-UP CHECKLIST

(Remove and Store in Job File)

NOTE: To avoid injury to personnel and damage to equipment or property when completing the procedures listed in this start-up checklist, use good judgment, follow safe practices, and adhere to the safety considerations/information as outlined in the preceding sections of this Controls, Start-Up, Operation and Troubleshooting document.

MODEL NO: _____
DATE: _____
SERIAL NO: _____
TECHNICIAN: _____

I. PRE-START-UP:

Verify that all packaging materials have been removed from unit.	(Y/N) _____
Verify installation of outdoor air hood.	(Y/N) _____
Verify that condensate connection is installed per installation instructions.	(Y/N) _____
Verify that all electrical connections and terminals are tight.	(Y/N) _____
Check that indoor-air filters are clean and in place.	(Y/N) _____
Check that outdoor air inlet screens are in place.	(Y/N) _____
Verify that unit is level.	(Y/N) _____
Check outdoor fan propeller for location in housing/orifice and verify setscrew is tight.	(Y/N) _____
Verify that scroll compressors are rotating in the correct direction.	(Y/N) _____
Verify installation of thermostat/space sensor.	(Y/N) _____
Verify ground integrity with a continuity test.	(Y/N) _____
Verify configuration values for electronic controls. (Refer to Control Set Up Checklist.)	(Y/N) _____
Verify that crankcase heaters have been energized for at least 24 hours.	(Y/N) _____
Check the Refrigerant leak Dissipation system is functional.	(Y/N) _____

II. START-UP

ELECTRICAL

Supply Voltage		L1-L2 _____	L2-L3 _____	L3-L1 _____
Compressor A1 Amps	_____ Unloaded	L1 _____	L2 _____	L3 _____
	_____ with Loader	L1 _____	L2 _____	L3 _____
Compressor A2 Amps		L1 _____	L2 _____	L3 _____
Electric Heat Amps (if equipped)		L1 _____	L2 _____	L3 _____
Supply Fan Amps at Max Speed		L1 _____	L2 _____	L3 _____

TEMPERATURES

Outdoor Air Temperature	_____ °F DB (Dry Bulb)	_____ °F WB (Wet Bulb)
Return Air Temperature	_____ °F DB	_____ °F WB
Cooling Supply Air	_____ °F DB	_____ °F WB
Electric Heat Supply Air	_____ °F	_____ °F

PRESSURES

Refrigerant Suction	_____ psig
Refrigerant Discharge	_____ psig
Verify refrigerant charge using charging charts	(Y/N) _____

GENERAL

Economizer minimum vent and changeover settings to job requirements	(Y/N) _____

CUT ALONG DOTTED LINE

CUT ALONG DOTTED LINE

© 2024 Carrier