RTU Open
Multi-Protocol Controller
Factory-Installed Option

Controls, Start-Up, Operation and Troubleshooting

580J/558J*07-30, 548J*07-24, 581J/551J*04-28, 549J*04-12, 582J/559J*04-06, 547J*04-06, 581K/551K*04-06, 549K*04-06, 582K/559K*04-07, 547K*04-07

CONTENTS

SAFETY CONSIDERATIONS 2
GENERAL 2
SENSOR/ACCESSORY INSTALLATION 2
Sensors and Accessories 4
User Interface 4
Install Analog Sensors 9
- SUPPLY AIR SENSOR (SAT)
- OUTDOOR AIR SENSOR (OAT)
- SPACE TEMPERATURE SENSOR (SPT)
- SENSOR AVERAGING
- CO2 SENSOR(S) (IAQ AND OAQ)
- RELATIVE HUMIDITY SENSORS (SPACE OR DUCT MOUNTED)

Installing Discrete Inputs 11
- COMPRESSOR SAFETY
- HUMIDISTAT
- SINGLE ENTHALPY (OUTDOOR ENTHALPY)
- DIFFERENTIAL ENTHALPY
- FIRE SHUTDOWN
- FILTER STATUS
- FAN STATUS
- REMOTE OCCUPANCY

Communication Wiring-Protocols 13
- GENERAL
- BACNET MS/TP
- MODBUS
- JOHNSON N2
- LONWORKS
- LOCAL ACCESS

START-UP 15
Axion™ Fan Set Up 15
Additional Installation/Inspection 15
- POWER EXHAUST RELAY POWER
- SERVICE TEST
- FAN TEST
- HIGH SPEED FAN TEST
- COMPRESSOR 1 AND COMPRESSOR 2 TEST
- HEAT 1 AND HEAT 2 TEST
- DEHUMIDIFICATION TEST
- POWER EXHAUST TEST
- ECONOMIZER TEST
- VFD SPEED TEST

Configuration 16
- SETPOINT
- UNIT
- INPUTS
- SERVICE CONFIGURATION

OPERATION 20
Occupancy 20
- ALWAYS OCCUPIED (DEFAULT)
- BACNET SCHEDULE
- BAS ON/OFF
- REMOTE OCC INPUT

Indoor (Supply) Fan 20
- AUTO
- CONTINUOUS
- ALWAYS ON
- FAN OFF DELAY
- INDOOR (SUPPLY) FAN STATUS

Cooling 20
Supply Fan 21
Economizer 21
Enthalpy Control 22
Space Air Quality 22
Power Exhaust 22
Pre-Occupancy Purge 22
Heating 22
Indoor Air Quality 22
Dehumidification 23
Demand Limit 23
Unoccupied Free Cooling 23
Optimal Start 23
Fire Shutdown 23
Compressor Safety 23
Fan Status 23
Filter Status 23
Door Switch 23
Remote Occupancy 23
TROUBLESHOOTING 24
General 24
- REPLACING THE RTU OPEN CONTROLLER BATTERY

Thermistor Troubleshooting 24
Software Version 24
Communication LED's 24
Alarms 27
- SAFETY CHAIN ALARM
- FIRE/SMOKE SHUTDOWN ALARM
- GAS VALVE ALARM
- SUPPLY FAN FAILURE
- SUPPLY FAN IN HAND
- COMPRESSOR STATUS
- SPACE TEMP SENSOR
- ZS SENSOR
- SUPPLY AIR TEMP SENSOR
- LOCAL OAT SENSOR
- OUTDOOR AIR TEMP SENSOR
- SPACE RELATIVE HUMIDITY SENSOR
- IAQ SENSOR
- OAQ SENSOR

Manufacturer reserves the right to discontinue, or change at any time, specifications or designs without notice and without incurring obligations.

- SPACE TEMPERATURE
- SUPPLY AIR TEMPERATURE
- SETPOINT SLIDER
- SWITCH CONFIGURATION
- ANALOG INPUT CONFIGURATION
- SPACE RELATIVE HUMIDITY
- INDOOR AIR QUALITY
- SUPPLY FAN RUNTIME
- COMPRESSOR 1 RUNTIME
- COMPRESSOR 2 RUNTIME
- FILTER

Performance 28

- CURRENT PERFORMANCE DATA
- EQUIPMENT RUNTIME
- ECONOMIZER UTILIZATION
- DCV UTILIZATION
- UNOCC FREE COOL UTILIZATION
- PART LOAD COOLING UTILIZATION
- FULL LOAD COOLING UTILIZATION
- HEATING UTILIZATION
- RECORDED HIGH OAT
- RECORDED LOW OAT
- PERFORMANCE DATA
- HISTORICAL PERFORMANCE DATA
- SAVE PERFORMANCE DATA DAILY
- EQUIPMENT RUNTIME
- ECONOMIZER UTILIZATION
- DCV UTILIZATION
- UNOCC FREE COOL UTILIZATION
- PART LOAD COOLING UTILIZATION
- FULL LOAD COOLING UTILIZATION
- HEATING UTILIZATION
- PREVIOUS HIGH OAT
- PREVIOUS LOW OAT

Third Party Networking 29

APPENDIX A — USER INTERFACE MENUS. 31

APPENDIX B — NETWORK POINTS FOR RTU OPEN. 39

RTU OPEN CONTROLLER START-UP SHEET. . . CL-1

SAFETY CONSIDERATIONS

Improper installation, adjustment, alteration, service, maintenance, or use can cause explosion, fire, electrical shock or other conditions which may cause personal injury or property damage. Consult a qualified installer, service agency, or your distributor or branch for information or assistance. The qualified installer or agency must use factory-authorized kits or accessories when modifying this product. Refer to the individual instructions packaged with the kits or accessories when installing.

Follow all safety codes. Wear safety glasses and work gloves. Use quenching cloths for brazing operations and have a fire extinguisher available. Read these instructions thoroughly and follow all warnings or cautions attached to the unit. Consult local building codes and appropriate national electrical codes (in USA, ANSI/NFPA70, National Electrical Code (NEC); in Canada, CSA C22.1) for special requirements.

It is important to recognize safety information. This is the safety-alert symbol ⚠. When you see this symbol on the unit and in instructions or manuals, be alert to the potential for personal injury.

Understand the signal words DANGER, WARNING, CAUTION, and NOTE. These words are used with the safety-alert symbol. DANGER identifies the most serious hazards which **will** result in severe personal injury or death. WARNING signifies hazards which **could** result in personal injury or death. CAUTION is used to identify unsafe practices, which **may** result in minor personal injury or product and property damage. NOTE is used to highlight suggestions which **will** result in enhanced installation, reliability, or operation.

⚠ DANGER

ELECTRICAL SHOCK HAZARD

Failure to follow this warning will result in personal injury or death.

Before performing service or maintenance operations on unit, turn off main power switch to unit and install lock(s) and lockout tag(s). Ensure electrical service to rooftop unit agrees with voltage and amperage listed on the unit rating plate. Unit may have more than one power switch.

GENERAL

The RTU Open controller is an integrated component of the Bryant rooftop unit. Its internal application programming provides optimum performance and energy efficiency. The RTU Open controller enables the unit to run in 100% standalone control mode or a Third Party Building Automation System (BAS). On-board DIP switches allow you to select your protocol (and baud rate) of choice among the four most popular protocols in use today: BACnet[1], Modbus[2], Johnson N2 and LonWorks[3]. (See Fig. 1.)

NOTE: Lon Works requires addition of LonWorks Option card.

Bryant's diagnostic display tools, Field Assistant can be used with the RTU Open controller. Access is available via a 5-pin J12 access port or Rnet communication network.

SENSOR/ACCESSORY INSTALLATION

There are a variety of sensors and accessories available for the RTU Open controller. Some of these can be factory or field installed, while others are only field installable. The RTU Open controller may also require connection to a building network system or building zoning system. All field control wiring that connects to the RTU Open controller must be routed through the raceway built into the corner post of the unit or secured to the unit control box with electrical conduit. The unit raceway provides the UL required clearance between high and low-voltage wiring. Pass the control wires through the hole provided in the corner post, then feed the wires thorough the raceway to the RTU Open controller. Connect the wires to the removable PCB connectors and then reconnect the connectors to the board. See Fig. 1 and Table 1 for board connections and Fig. 2-5 for Typical Factory RTU Open controller wiring.

IMPORTANT: Refer to the specific sensor or accessory instructions for its proper installation and for rooftop unit installation refer to base unit installation instructions and the unit's wiring diagrams.

⚠ WARNING

ELECTRICAL SHOCK HAZARD

Failure to follow this warning could result in personal injury, death and/or equipment damage.

Disconnect and lockout/tag-out electrical power before wiring the RTU Open controller.

1. BACnet is a registered trademark of ASHRAE (American Society of Heating, Refrigerating, and Air-Conditioning Engineers).
2. Modbus is a registered trademark of Schneider Electric.
3. LonWorks is a registered trademark of Echelon Corporation.

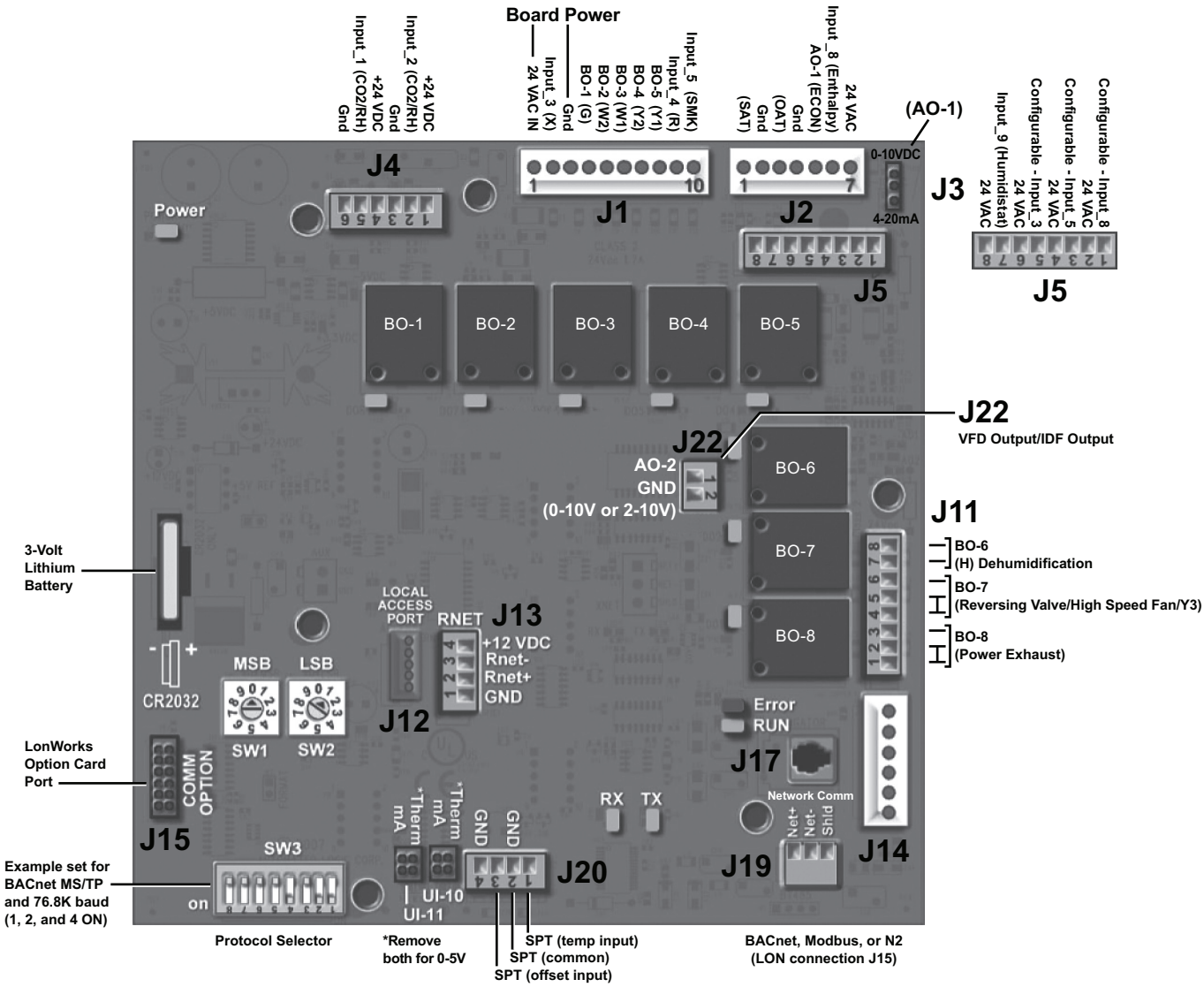

Fig. 1 — RTU Open Control Module

Table 1 — RTU Open Controller Inputs and Outputs

POINT NAME	BACnet OBJECT NAME	TYPE OF I/O	CONNECTION PIN NUMBER(S)	CHANNEL DESIGNATION
DEDICATED INPUTS				
Space Temp / Zone Temp	zone_temp	AI (10K Thermistor)	J20-1 and 2	Analog Input 10
Supply Air Temperature	sa_temp		J2-1 and 2	Analog Input 6
Outside Air Temperature	oa_temp		J2-3 and 4	Analog Input 7
Space Temperature Offset Pot	stpt_adj_offset	AI (100K Potentiometer)	J20-3 and 4	Analog Input 11
Safety Chain Feedback	safety_status	BI (24 VAC)	J1-9	Binary Input 4
Compressor Safety Status (1)	comp_status		J1-2	Binary Input 3
Fire Shutdown Status	firedown_status		J1-10	Binary Input 5
Enthalpy Status	enthalpy_status		J2-6 and 7	Binary Input 8
Humidistat Input Status	humstat_status		J5-7 and 8	Binary Input 9
Zone Temperature	n/a	n/a	J13-1-4	Rnet
CONFIGURABLE INPUTS (4)				
Indoor Air CO_2	iaq	AI (4-20 mA)	J4-2 and 3 or J4-5 and 6	Analog Input 2
Outdoor Air CO_2	oaq			Analog Input 1
Space Relative Humidity	space_rh			Analog Input 1
Supply Fan Status (2)	sfan_status	BI (24 VAC)	J5-1 and 2 or J5-3 and 4, J5-5 and 6 or J5-7 and 8 (3)	Binary Input 3, 5, 8, or 9, except where intrinsic input is used
Filter Status (2)	filter_status			
Door Contact (2)	door_contact_status			
Remote Occupancy input (2)	occ_contact_status			
IGC input (2)	igcovr_status			Binary Input 9. Mandatory input on gas heat units.
OUTPUTS				
Economizer Output	econ_output	AO (4-20mA)	J2-5	Analog Output 1
Supply Fan VFD	vfd_output	AO (0-10Vdc or 2-10Vdc)	J22-1 and 2	Analog Output 2
Supply Fan Relay	sfan	BO Relay (24VAC, 1A)	J1-4	Binary Output 1 (G)
Cool 1 Relay State	comp_1		J1-8	Binary Output 5 (Y1)
Cool 2 Relay State	comp_2		J1-7	Binary Output 4 (Y2)
Cool 3 Relay State	comp_3		J11-5 and 6	Binary Output 7 (Y3)
Heat 1 Relay State	heat_1		J1-6	Binary Output 3 (W1)
Heat 2 Relay State	heat_2		J1-5	Binary Output 2 (W2)
Power Exhaust Relay State	pexh		J11-2 and 3 (N.O.)	Binary Output 8 (PE)
Dehumidification Relay	dehum		J11-7 and 8 (N.O.)	Binary Output 6

(1) Safety Chain Feedback: 24Vac required at this terminal to provide “Run Enable” status. See Input/Output section for additional instructions.
(2) These inputs are configurable. If installed, they take the place of the default input on the specific channel. See appropriate Input Configuration Section for wiring and setup instructions.
(3) Parallel pins J5-1 = J2-6, J5-3 = J1-10, J5-5 = J1-2 are used for field installation.
(4) Refer to the input configuration and accessory sections for more detail.

Sensors and Accessories

The RTU Open controller is configurable with the following field-supplied sensors:

NOTE: Supply air temperature sensor (33ZCSENSAT) is factory-installed.

- Space temperature sensor (ZS-CAR, ZS-C-CAR, ZS-H-CAR, ZS-HC-CAR, ZSPL-C-CAR, ZSPL-H-CAR, ZSPL-HC-CAR, ZSP-CAR, ZSP-C-CAR, ZSP-H-CAR, ZSP-HC-CAR, 33ZCT55SPT, 33ZCT56SPT, or 33ZCT59SPT)
- Indoor air quality sensor (ZS-C-CAR, ZS-HC-CAR, ZSPL-C-CAR, ZSPL-HC-CAR, ZSP-C-CAR, ZSP-HC-CAR, 33ZCSPTCO2-01, 33ZCSPTCO2LCD-01, 33ZCT55CO2-02, or 33ZCT56CO2-02) required for demand controlled ventilation.
- Outdoor air quality sensor (33ZCSPTCO2-01, 33ZCSPT-CO2LCD-01)
- CO_2 aspirator box (C33ZCCASPCO2) required for CO_2 return duct/outside air applications
- Outdoor air enthalpy switch (33CSENTHSW)
- Return air enthalpy sensor (33CSENTSEN) required for differential enthalpy control
- Space relative humidity sensor (33ZCSENSRH-02)
- Duct relative humidity (33ZCSENDRH-02)
- Humidistat (--HL--38MG-029)
- Smoke Detectors (CRSMKSEN002A00, CRSMKKIT002A00)
- Fan and/or Filter Status (CRSTATUS001A00, CRSTATUS005A00)

User Interface

- Field Assistant (USB-TKIT required)

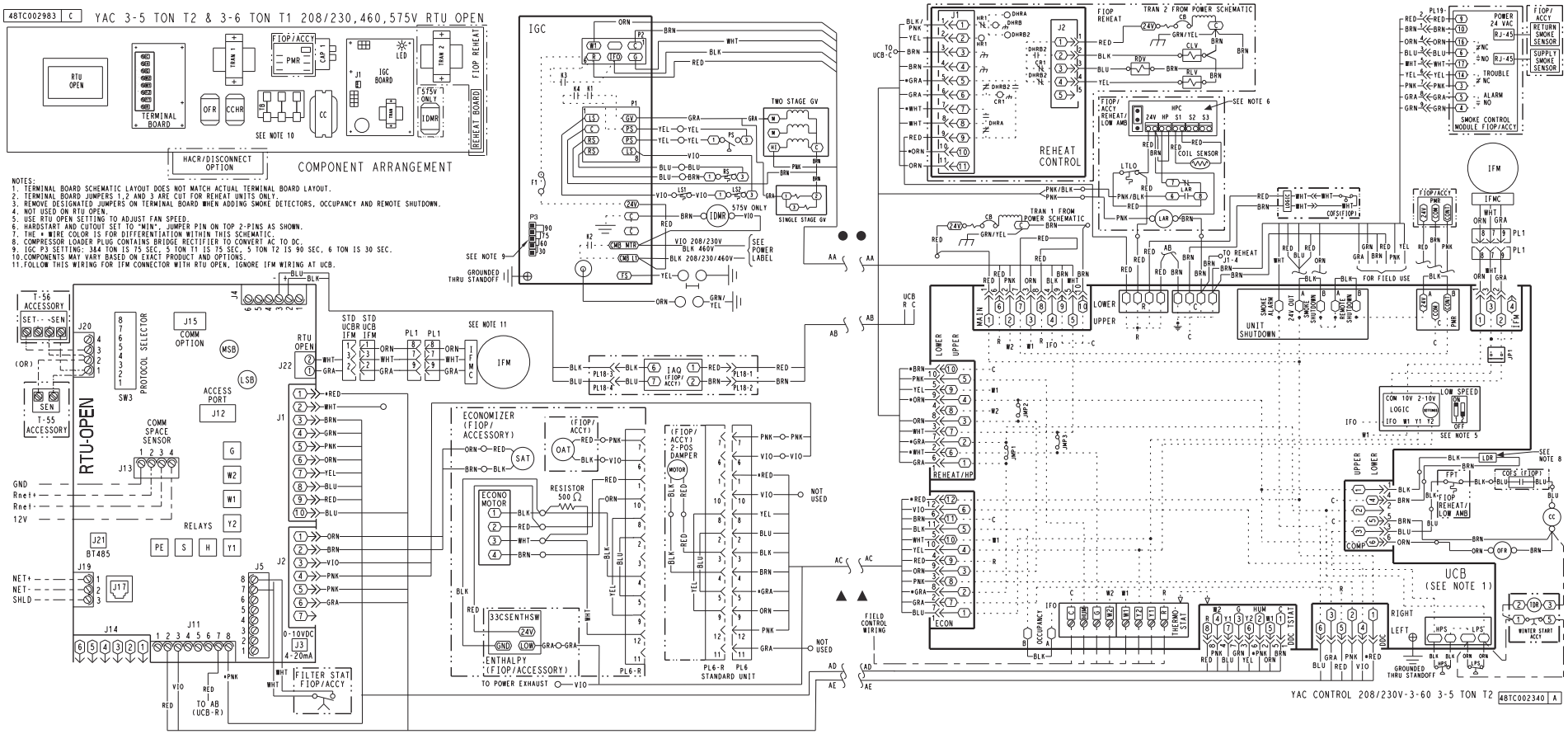

Fig. 2 — Typical Factory Option Wiring - 581K 04-06 Shown

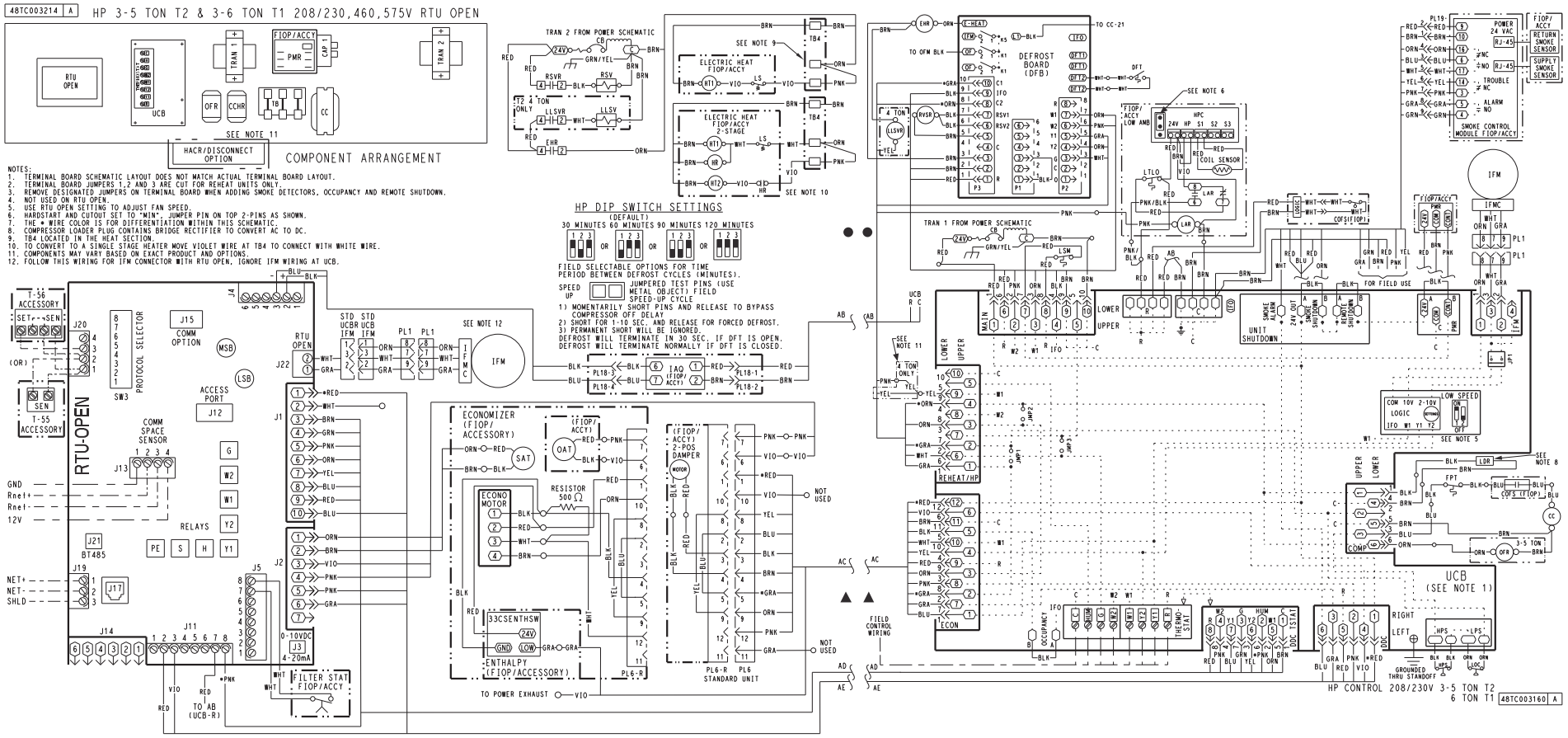

Fig. 3 — Typical Factory Option Wiring - 549K 04-06 Shown

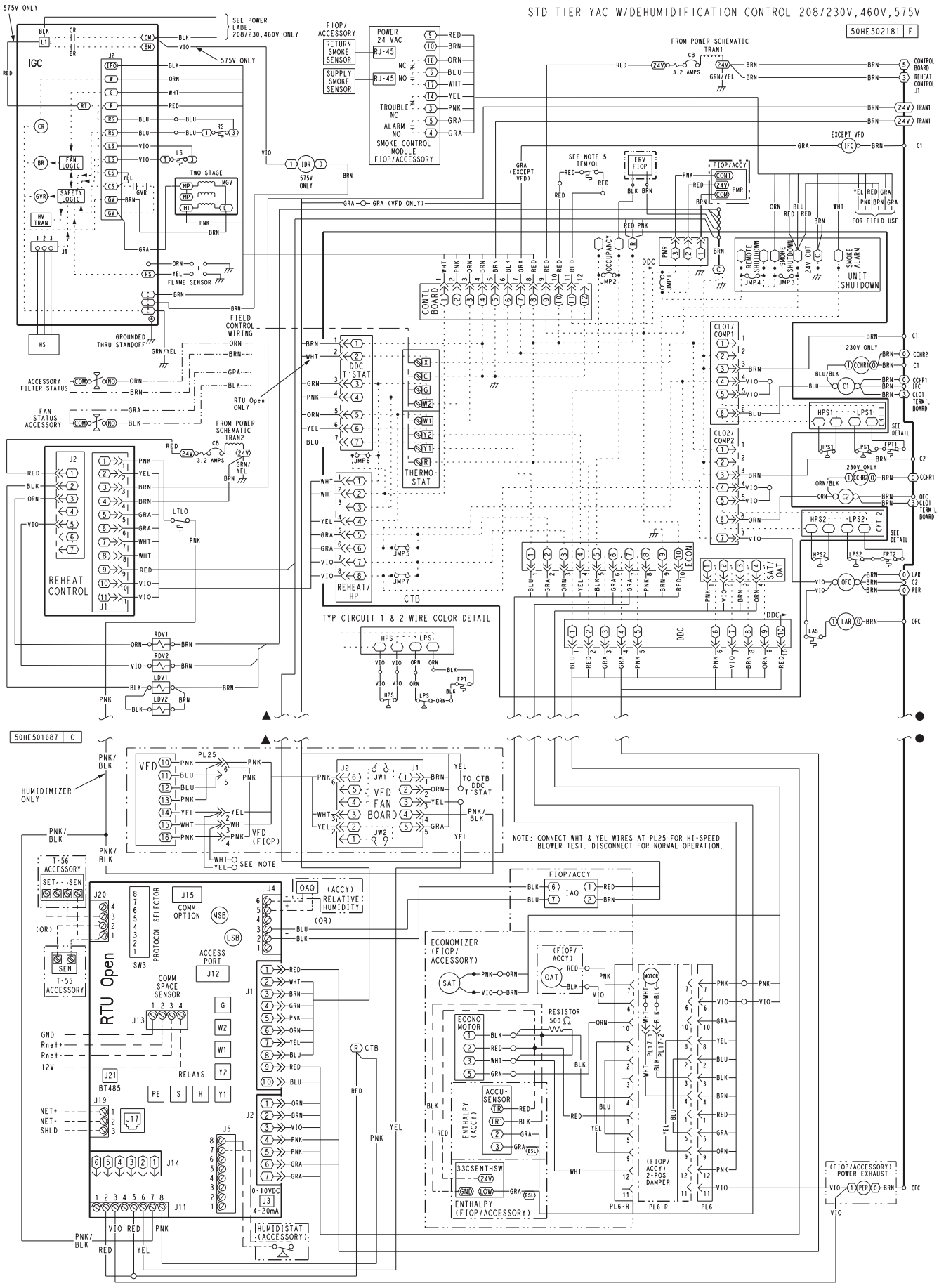

Fig. 4 — Typical Factory Option Wiring - 580J 17-30 Shown

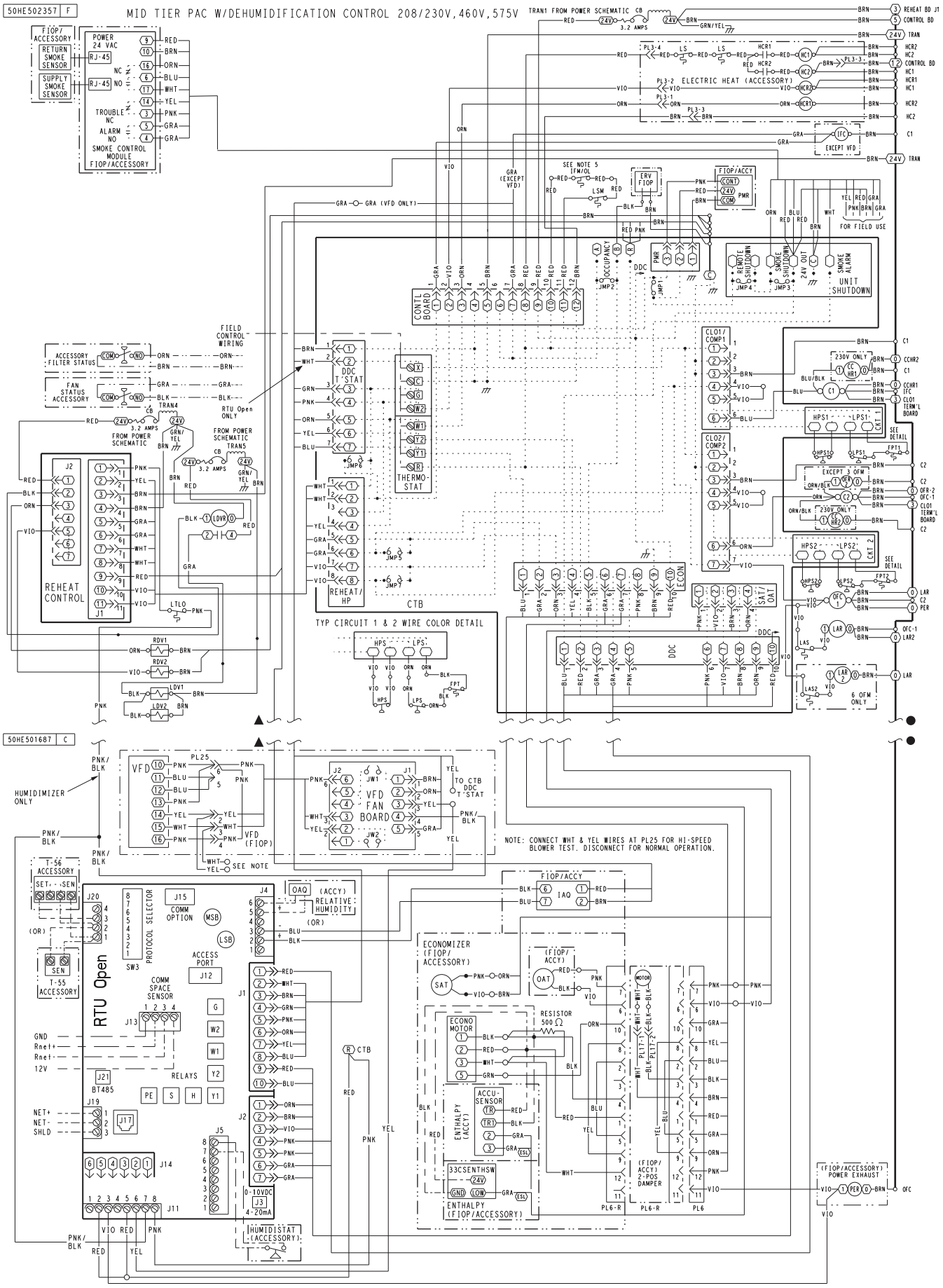

Fig. 5 — Typical Factory Option Wiring - 551J 17-28 Shown

Install Analog Sensors

SUPPLY AIR SENSOR (SAT)

The factory supplies the discharge (supply) air sensor with the unit and is pre-wired.

Unit Size	SAT Shipping Location/Installation Location
582J/559J/547J 04-06 581J/551J 04-16, 549J 04-12 580J/558J 07-16, 548J 07-14	The SAT is secured to the unit's supply duct opening. This sensor must be relocated into the supply duct during unit installation.
581J/551J 17-24 580J/558J 17-30 548J 17-24	The SAT is mounted through the side of the heat chamber below the fan deck, and does **NOT** require relocation.
582K/559K 04-07 581K/551K 04-06 547K 04-07 549K 04-06	The SAT is mounted through the fan deck and does **NOT** require relocation.

OUTDOOR AIR SENSOR (OAT)

The OAT is supplied with the economizer option or accessory. It is wired through the 12-pin plug (PL6) in the return air section of the unit and is mounted on the economizer assembly.

SPACE TEMPERATURE SENSOR (SPT)

There are 2 types of space temperature sensors available from Bryant, resistive input non-communicating (T55, T56, and T59) and Rnet communicating (ZS-CAR, ZS-C-CAR, ZS-H-CAR, ZS-HC-CAR, ZSPL-C-CAR, ZSPL-H-CAR, ZSPL-HC-CAR, ZSP-CAR, ZSP-C-CAR, ZSP-H-CAR, ZSP-HC-CAR) sensors. Each type has a variety of options consisting of: timed override button, set point adjustment, a LCD screen, combination of humidity or CO_2 sensing and communication tie in. Space temperature can be also be written to from a building network or zoning system. However, it is still recommended that return air duct sensor be installed to allow stand-alone operation for back-up. Refer to the configuration section for details on controller configurations associated with space sensors.

Resistive Non-Communicating Sensor Wiring

For sensor with setpoint adjustment up to 1000 ft (305m), use three-conductor shielded cable 20 gauge wire to connect the sensor to the controller. For non set point adjustment (slidebar) or return air duct sensor, an unshielded, 18 or 20 gauge, two-conductor, twisted pair cable may be used. Below is the list of the connections of the SPT to the RTU Open controller, refer to Fig. 6 and 7 for typical connections at the sensor.

- J20-1 = temperature sensor input (SEN)
- J20-2 = sensor common
- J20-3 = Setpoint adjustment input (SET)

NOTE: See Fig. 8 for space temperature sensor averaging. T55/T56 Override button will no longer function when sensors are averaged. Only Sensor 1 T56 STO input can be used.

Rnet Communicating Sensor Wiring

The Rnet bus allows local communication with the RTU Open controller, including communicating sensors. The Rnet bus can hold up to 6 devices in the following combinations wired in daisy-chain or hybrid configuration:

- 1-4 ZS-CAR sensor(s)
- 1 ZSPL-CAR or ZSP-CAR sensor
- 1-4 SPS sensor(s), and 1ZSPL-CAR or ZSP-CAR sensor
- Any of the above combinations, plus CO_2 or RH combination

NOTE: Additional ZS sensors must be addressed. Use the jumpers on the ZS sensor's circuit board and refer to the sensor installation instructions for addressing.

For Rnet wiring up to 500ft (152m), use 18 AWG 4 conductor unshielded plenum rated cable. The RTU Open controller J13-RNET connection has a 4 pin PCB connector wired as described below, Fig. 9 shows sensor Rnet wiring.

- RNET - 1 = Signal ground (GND)
- RNET - 2 = Signal (Rnet+)
- RNET - 3 = Signal (Rnet-)
- RNET - 4 = Power (+12v)

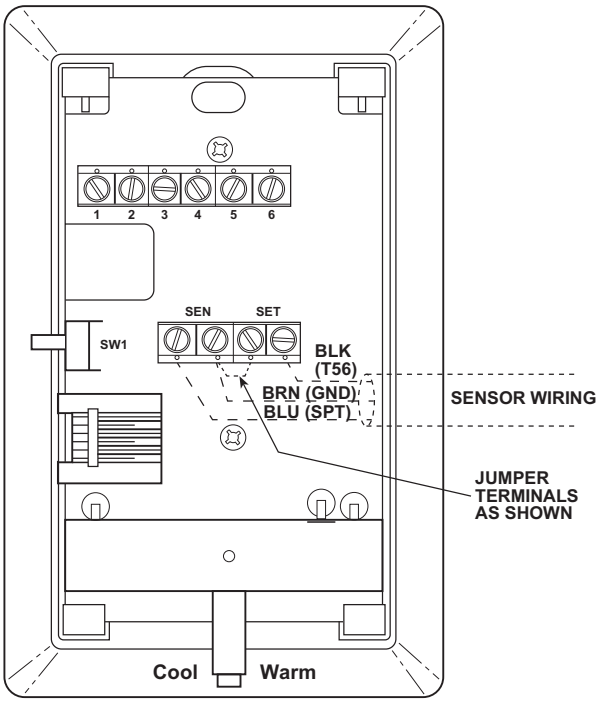

Fig. 6 — Space Temperature Sensor Typical Wiring (33ZCT56SPT)

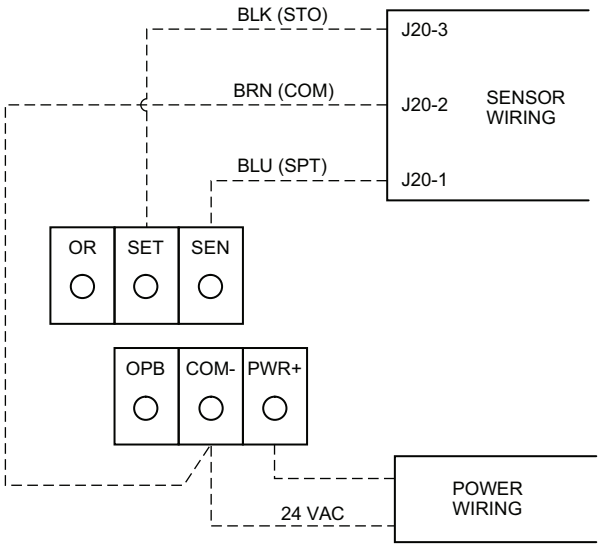

Fig. 7 — Space Temperature Sensor Typical Wiring (33ZCT59SPT)

SENSOR AVERAGING

Non-communicating sensors:

See Fig. 8 for space temperature sensor averaging configurations, only combinations of 4 or 9 sensors will operate correctly.

NOTE: T55/T56 Override button will no longer function when sensors are averaged. Only 1 T56 STO input can be used. Non-communication CO_2 sensors can not be averaged.

Communicating sensors:

Any combination of sensors described in the "Rnet Communicating Sensor Wiring" section can be used.

NOTE: Communicating CO_2 sensors and RH sensors can be averaged if within the realm described.

CO_2 SENSOR(S) (IAQ AND OAQ)

The indoor air quality (IAQ) and outdoor air quality (OAQ) sensors monitor carbon dioxide (CO_2) levels. This information is used to monitor the quality of air in terms of parts per million (PPM). The same sensor is used for inside, outside, and duct monitoring, except an aspirator box is required for outside and duct mounting. The CO_2 sensor is preset for a range of 0 to 2000 ppm and a linear mA output of 4 to 20. The rooftop unit may have a factory installed CO_2 sensor on the side of the economizer assembly in the return air section of the unit and is pre-wired and pre-configured at the factory. For field installed sensors, a field supplied transformer must be used to power the sensor. Refer to the instructions supplied with the CO_2 sensor for electrical requirements and terminal locations. RTU Open controller configurations must be changed after adding a CO_2 sensor. See below and Fig. 10 for typical CO_2 sensor wiring.

- J4-2 or J4-5 = 4-20mA signal input
- J4-3 or J4-6 = signal common

NOTE: The factory used J4-2 and 3 for CO2 (IAQ) sensor inputs.

Combination Temperature and CO_2 Sensor:

If using a combination temperature and CO_2 sensor (33ZCT55CO2-02 or 33ZCT56CO2-02), refer to the installation instructions provided with the sensor.

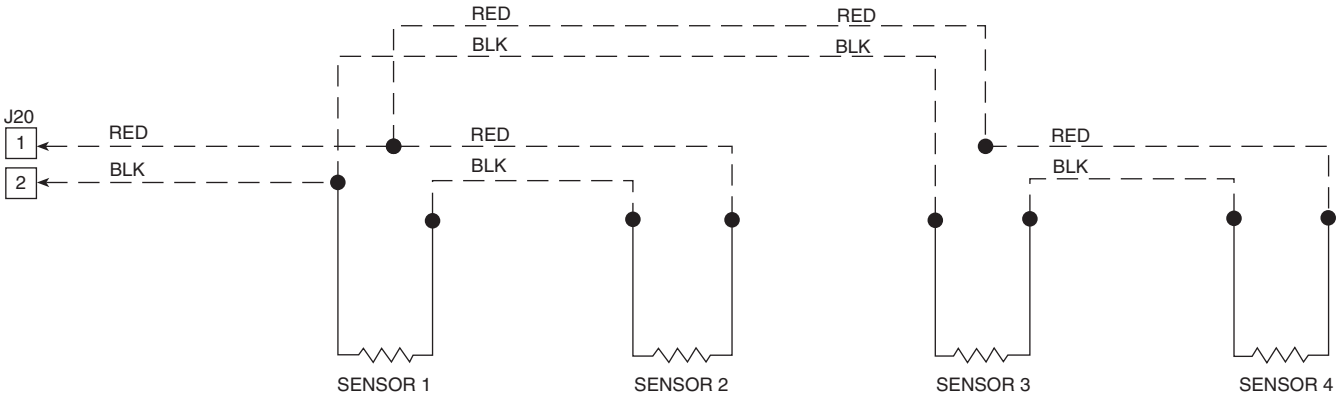

SPACE TEMPERATURE AVERAGING — 4 SENSOR NON-COMMUNICATING APPLICATION

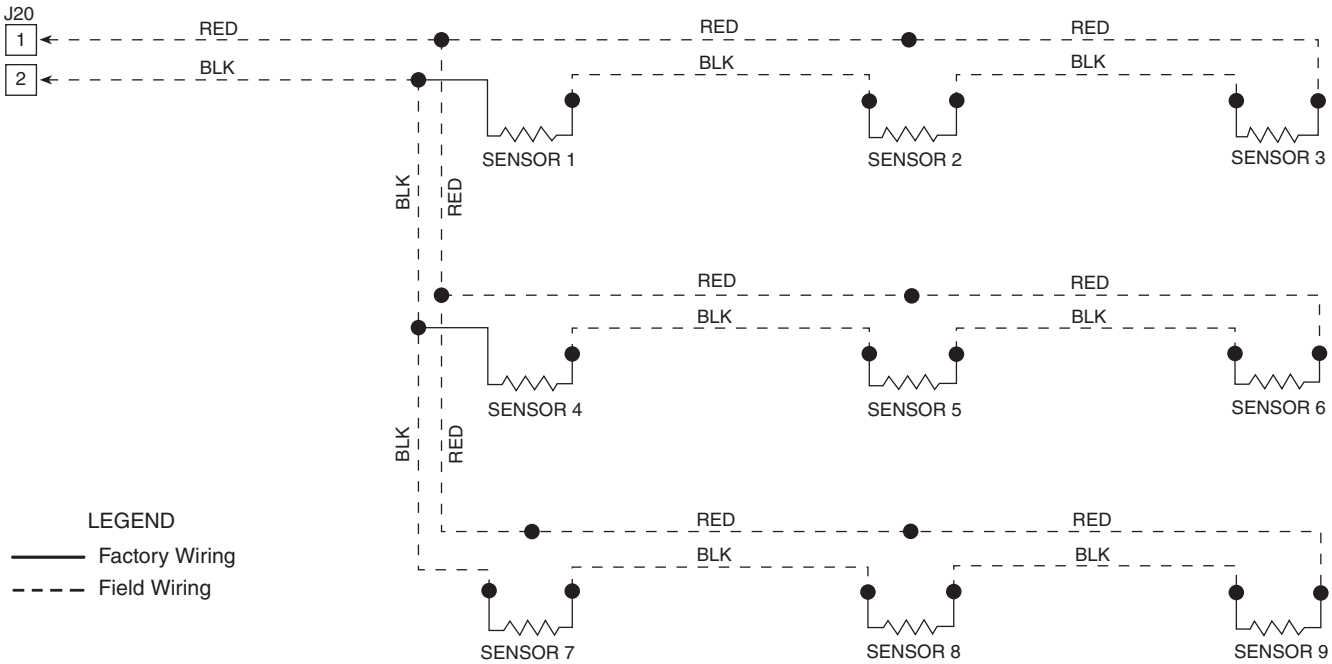

SPACE TEMPERATURE AVERAGING — 9 SENSOR NON-COMMUNICATING APPLICATION

Fig. 8 — Space Temperature Averaging for Non-Communicating Sensors

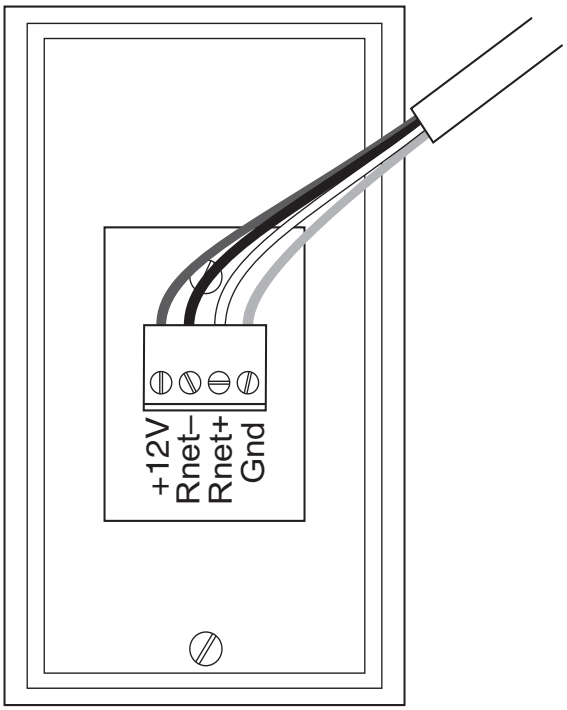

Fig. 9 — Typical Rnet Communication Sensor Wiring

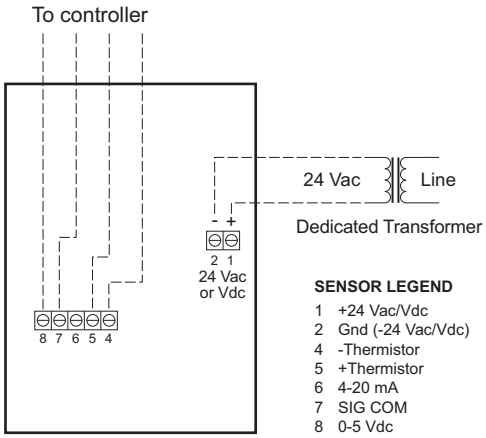

Fig. 10 — Indoor/Outdoor Air Quality (CO_2) Sensor (33ZCSPTCO2-01 or 33ZCSPTCO2LCD-01) Typical Wiring Diagram

RELATIVE HUMIDITY SENSORS (SPACE OR DUCT MOUNTED)

The accessory space humidity sensor or duct humidity sensor is used to measure the relative humidity of the air within the space or return air duct. The RH reading is used to control the Perfect Humidity™ option of the rooftop unit. For wiring distances up to 500 ft (152m), use a 3-conductor, 18 or 20 AWG shielded cable. The shield must be removed from the sensor end of the cable and grounded at the unit end. The current loop power for the sensor is provided by the RTU Open controller as 24vdc. Refer to the instructions supplied with the RH sensor for electrical requirements and terminal locations. RTU Open controller configurations must be changed after adding a RH sensor. See below and Fig. 11 and 12 for typical non-communicating RH sensor wiring.

- J4-1 or J4-4 = 24vdc loop power
- J4-2 or J4-5 = 4-20mA signal input

NOTE: The factory default for dehumidification control is a normally open humidistat.

Installing Discrete Inputs

COMPRESSOR SAFETY

The compressor safety input provides the RTU Open controller with feedback to when the compressor is not running and should be. This feedback can be provided by a Compressor Lock-Out (CLO) device or current switch when field installed. Compressor safety is a dedicated input on the configurable input 3 and tells the RTU Open controller when the compressor is locked out. The normal condition for compressor safety is good operation. A normally open compressor safety is the factory default for all units. Follow specific accessory instructions if installing a CLO device. The CLO should wire into the unit's Central Terminal Board (CTB) (all 580J/558J/548J, 581J/551J/549J, and 582J/559J/547J units) or Unit Control Board (UCB) (582K/559K/547K 04-07, 581K/551K/549K 04-06).

NOTE: Input 3 can also be wired into J-5.

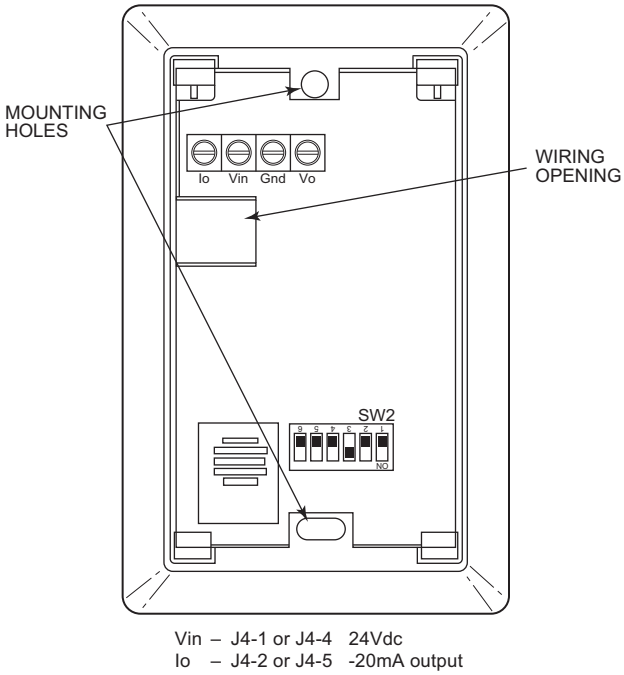

Fig. 11 — Space Relative Humidity Sensor Typical Wiring

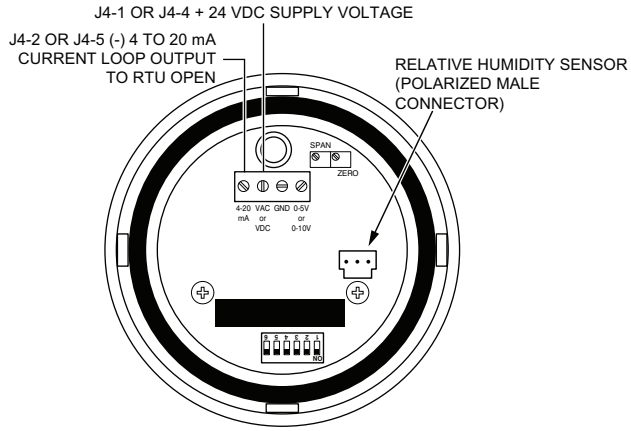

Fig. 12 — Duct Relative Humidity Sensor Typical Wiring

HUMIDISTAT

The accessory humidistat provides the RTU Open controller insight to the relative humidity in the space. The humidistat reads the RH level in the space and compares it to its setpoint to operate a dry contact. The humidistat is a dedicated input on the configurable input 9 and tells the RTU Open controller when the

RH level is HIGH or LOW. The normal condition for humidity is LOW. A normally open humidistat is the factory default control for the Perfect Humidity option. To wire in the field:

- J5-8 = 24 VAC source for dry contact
- J5-7 = Signal input

SINGLE ENTHALPY (OUTDOOR ENTHALPY)

The outdoor enthalpy switch/receiver (33CSENTHSW) senses temperature and humidity of the air surrounding the device and calculates the enthalpy when used without an enthalpy sensor. The relay is energized when enthalpy is high (above 28 BTU/lb OR dry bulb temperature is above 75°F) and de-energized when enthalpy is low (below 27 BTU/lb AND dry bulb temperature is below 74.5°F). The enthalpy input is dedicated to input 8 and tells the RTU Open controller when the outside air enthalpy is HIGH or LOW. The normal condition for the enthalpy input is HIGH. Enthalpy is configured on input 8 in the factory when it is added as an option.

NOTE: The enthalpy calculation is done using an average altitude of 1000 ft above sea level.

For field installation, refer to the enthalpy accessory instructions. For wiring see Fig. 13. The RTU Open board provides 24vac on one of the two loose gray wires in the return air section of the rooftop near the 12-pin economizer plug. To determine the correct gray, measure the voltage on the wires with power applied to the unit. If 24-vac is sensed, then that is the gray wire that is connected to the RTU Open board at J2-7. The other is the signal for input 8, connect it to the LOW Enthalpy terminal on the enthalpy switch/receiver. Tie into the 12-pin economizer plug on pin 4 or the black wire connected to the actuator for the enthalpy's GND connection. Power can also be provided direct from the unit transformer and J5 terminal on the RTU Open controller.

- J2-7 or J5-2 = 24 VAC for enthalpy switch power
- J2-6 or J5-1 = input signal

DIFFERENTIAL ENTHALPY

Differential enthalpy control requires both an enthalpy switch/receiver (33CSENTHSW) and an enthalpy sensor (33CSENTSEN). The enthalpy sensor must be installed in the field as the factory can only provide single enthalpy. The enthalpy sensor must be mounted in the return airstream and calculates the enthalpy of the indoor air. The relay is energized when the enthalpy detected by the return air enthalpy sensor is less than the enthalpy at the enthalpy switch/receiver. The relay is de-energized when the enthalpy detected by the return air enthalpy sensor is greater than the enthalpy at the enthalpy switch/receiver (differential enthalpy control).

To wire return air enthalpy sensor:

Connect the 4-20 mA In terminal on the enthalpy switch/ receiver to the 4-20 mA Out terminal on the return air enthalpy sensor. Connect the 24-36 VDC Out terminal on the enthalpy switch/receiver to the 24-36 VDC In terminal on the return air enthalpy sensor. (See Fig. 13.)

FIRE SHUTDOWN

The fire shutdown input is provided for unit shutdown in response to a fire alarm or smoke detector. The fire shutdown input is dedicated to input 5 and tells the RTU Open controller when to shutdown due to smoke detection or fire alarm system. The normal condition for fire shutdown is there is no fire alarm. The unit may have factory installed smoke detector(s); refer to the base unit installation instructions for details on any adjustments required during unit installation. Fire shutdown is always factory configured for a normally open smoke detector.

For field installation of a smoke detector see instructions for that specific accessory. See below and the troubleshooting section for wiring at the unit's Central Terminal Board (CTB) (all 580J/558J/548J, 581J/551J/549J, and 582J/559J/547J units) or Unit Control Board (UCB) (582K/559K/547K 04-07, 581K/551K/549K 04-06).

- CTB or UCB - UNIT SHUTDOWN - 24v OUT = 24 VAC source
- CTB or UCB - UNIT SHUTDOWN - Smoke Alarm = Signal input to RTU Open controller

NOTE: Input 5 can also be wired into J5-3.

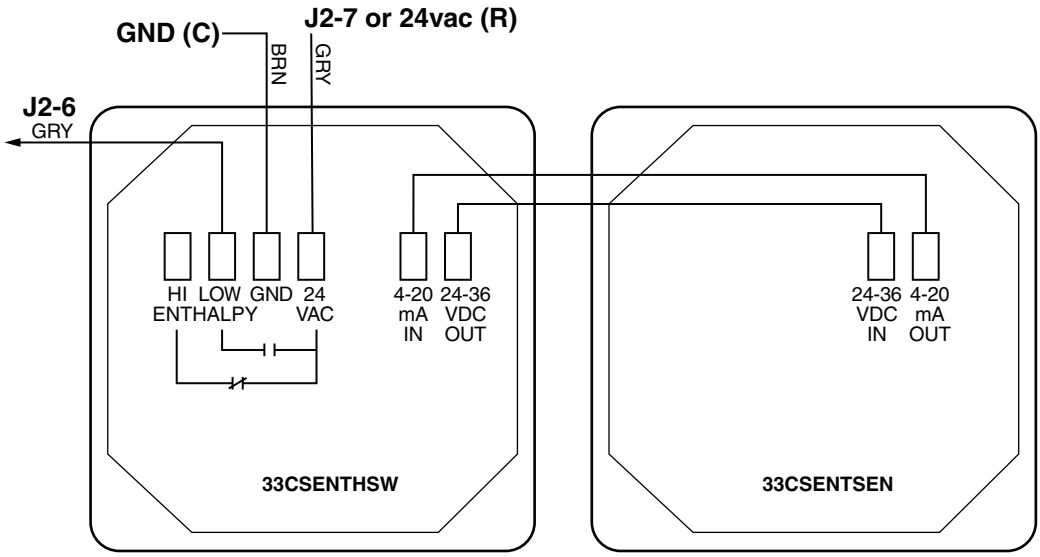

Fig. 13 — Enthalpy Switch and Sensor Wiring

FILTER STATUS

The filter status accessory is a field-installed accessory. This accessory detects plugged filters. When installing this accessory, the unit must have a free input (input 3, 5, 8, or 9). One of the dedicated functions (Humidistat, Fire shutdown, Enthalpy, or Compressor safety) must not be in use to configure Filter Status. Refer to the configuration section for details on configuring inputs for specific functions and state. Refer to Fig. 1 for wire terminations at J5.

FAN STATUS

The fan status accessory is a field-installed accessory. This accessory detects when the indoor fan is moving air. When installing this accessory, the unit must have a free input (input 3, 5, 8, or 9). One of the dedicated functions (Humidistat, Fire shutdown, Enthalpy, or Compressor safety) must not be in use to configure Fan Status. Refer to the configuration section for details on configuring inputs for specific functions and state. Refer to Fig. 1 for wire terminations at J5.

REMOTE OCCUPANCY

The remote occupancy accessory is a field-installed accessory. This accessory provides an input to change the units occupancy status. When installing this accessory, the unit must have a free input (input 3, 5, 8, or 9). One of the dedicated functions (Humidistat, Fire shutdown, Enthalpy, or Compressor safety) must not be in use to configure remote occupancy. Refer to the configuration section for details on configuring inputs for specific functions and state. Refer to Fig. 1 for wire terminations at J5.

Communication Wiring-Protocols

GENERAL

Protocols are the communication languages spoken by control devices. The main purpose of a protocol is to communicate information in the most efficient method possible. Different protocols exist to provide different kinds of information for different applications. In the BAS application, many different protocols are used, depending on manufacturer. Protocols do not change the function of a controller; just make the front end user different.

The RTU Open controller can be set to communicate on four different protocols: BACnet, Modbus, N2, and LonWorks. Switch 3 (SW3) on the board is used to set protocol and baud rate. Switches 1 and 2 (SW1 and SW2) are used to set the board's network address. See Fig. 14 and 15 for protocol switch settings and address switches. The third party connection to the RTU Open controller is through plug J19. See Fig. 16 for wiring. Contact Bryant applications engineering for more detailed information on protocols, third party wiring, and networking.

NOTE: Power must be cycled after changing the SW1-3 switch settings.

BACnet MS/TP

BACnet Master Slave/Token Passing (MS/TP) is used for communicating BACnet over a sub-network of BACnet-only controllers. This is the default Bryant communications protocol. Each RTU Open module acts as an MS/TP Master. The speed of an MS/TP network can range from 9600 to 76.8K baud. Physical Addresses can be set from 01 to 99.

SW3 Protocol Selection

PROTOCOL	DS8	DS7	DS6	DS5	DS4	DS3	DS2	DS1
BACnet MS/TP (Master)	Unused	OFF	OFF	OFF	ON	OFF	Select Baud	Select Baud
Modbus (Slave)	Unused	OFF	OFF	ON	ON	OFF	Select Baud	Select Baud
N2 (Slave)	Unused	OFF	OFF	OFF	ON	ON	OFF	OFF
LonWorks	Unused	ON	ON	OFF	ON	OFF	OFF	ON

NOTE:

DS = Dip Switch

BACnet MS/TP SW3 example shown

Baud Rate Selections

BAUD RATE	DS2	DS1
9,600	OFF	OFF
19,200	ON	OFF
38,400	OFF	ON
76,800	ON	ON

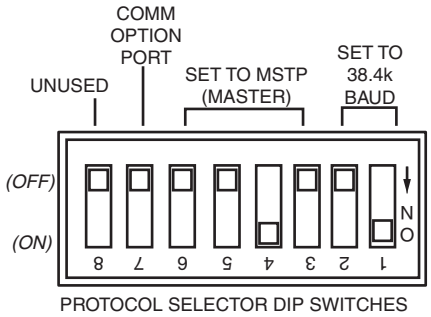

Fig. 14 — RTU Open Controller SW3 Dip Switch Settings

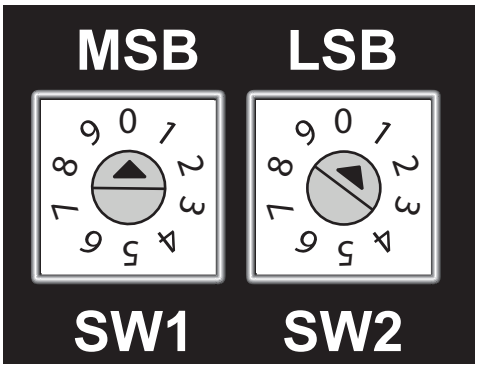

Fig. 15 — RTU Open Controller Address Switches

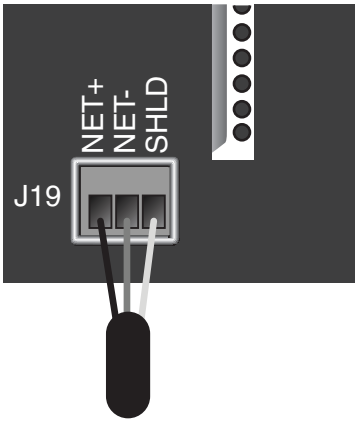

Fig. 16 — Network Wiring

MODBUS

The RTU Open module can speak the Modicon Modbus RTU Protocol as described in the Modicon Modbus Protocol Reference Guide, PI--MBUS--300 Rev. J. The speed of a Modbus network can range from 9600 to 76.8K baud. Physical Addresses can be set from 01 to 99.

JOHNSON N2

N2 is not a standard protocol, but one that was created by Johnson Controls, Inc. that has been made open and available to the public. The speed of N2 network is limited to only 9600 baud. Physical Addresses can be set from 01 to 99.

LONWORKS

LonWorks is an open protocol that requires the use of Echelon's Neuron microprocessor to encode and decode the LonWorks packets. In order to reduce the cost of adding that hardware on every module, a separate LonWorks Option Card (LON-OC) was designed to connect to the RTU Open controller.

This accessory card is needed for LonWorks and has to be ordered and connected using the ribbon cable to plug J15 (see Fig. 17). The RTU Open controller baud rate must be set to 38.4k to communicate with the LonWorks Option Card. The address switches (SW1 and SW2) are not used with LonWorks.

LOCAL ACCESS

Field Assistant

Field Assistant is a computer program included with the purchase of the Tech Tool Kit (USB-TKIT). This is a field Tech Tool to set-up, service, or download application software to the RTU Open controller and includes a USB Link Cable. The link cable connects a USB port to the J12 local access port. See Fig. 18.

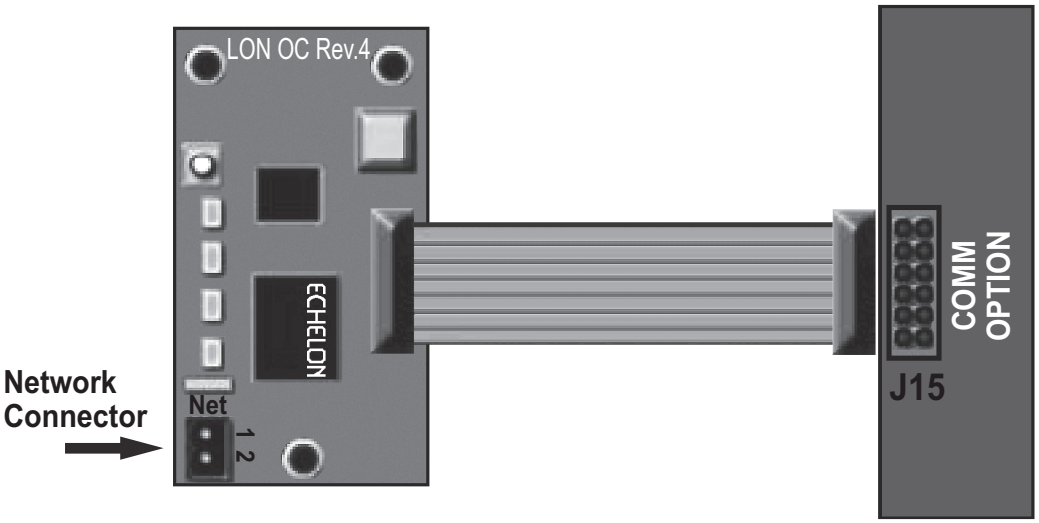

Fig. 17 — LON-OC and LON Network Wiring

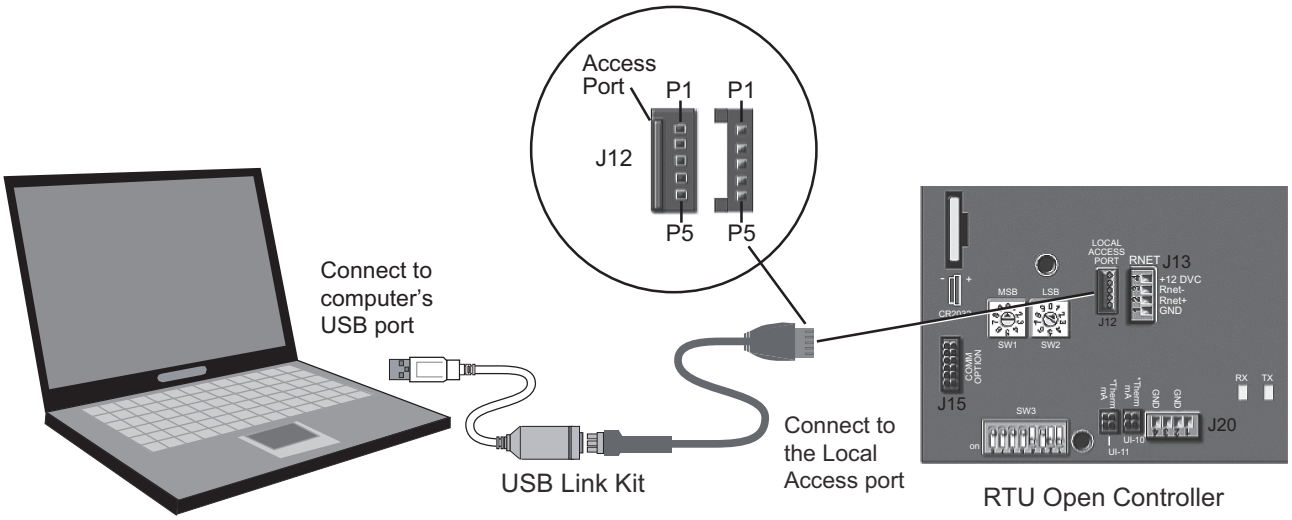

Fig. 18 — PC Running Field Assistant

START-UP

IMPORTANT: Follow the base unit's start-up sequence documented in its specific instructions. Use the base unit's start-up check list when performing the start-up. At the end of this manual there is an additional RTU Open controller Start-Up Sheet to be completed and included with the base unit check list.

Besides the base unit start-up, there are a few steps to take to properly start-up the controls. The RTU Open Service Test function should be used to assist in the base unit start-up and also allows verification of output operation. Controller configuration is also part of start-up. This is especially important when field accessories have been added to the unit. The factory pre-configures options installed at the factory. There may also be additional installation steps or inspection required during the start-up process.

Axion™ Fan Set Up

The RTU Open controller controls the vane axial fan directly, therefore the USB fan set up is not needed. The maximum, minimum, and heat speed setting can be adjusted to restrict too much to too less of air flow. However the control will speed up the fan as needed during heating or cooling so the maximum should be the only one needed for duct restrictions.

Additional Installation/Inspection

Inspect the field installed accessories for proper installation, making note of which ones do or do not require configuration changes. Inspect the RTU Open Alarms for initial insight to any potential issues. See troubleshooting section for alarms. Inspect the SAT sensor for relocation as intended during installation. Inspect special wiring as directed below.

POWER EXHAUST RELAY POWER

The relay used by the RTU Open board to control power exhaust is a dry contact which means it does not have 24vac. This 24vac must be connected to the relay to allow it operate the power exhaust relay in the PE accessory. A 24vac source should be provided to the J11-2 pin on the RTU Open controller. This can be provided by the unit's transformer from various sources.

NOTE: The factory-installed power exhaust comes pre-configured and does not require routing 24vac as described above. This factory-installed option is only available on the following vertical air flow units: 580J/558J/548J 17-30 and 581J/551J 16-30.

SERVICE TEST

The Service Test function can be used to verify proper operation of compressors, heating stages, indoor fan, power exhaust fans, economizer, and dehumidification. Use of Service Test is recommended at initial system start up and during troubleshooting. See Appendix A for Service Test Mode table.

Service Test mode has the following changes from normal operation:

- Outdoor air temperature limits for cooling circuits, economizer, and heating are ignored.
- Normal compressor time guards and other staging delays are ignored.
- The status of Alarms (except Fire and Safety chain) is ignored, but all alerts and alarms are still broadcast on the network.

Service Test can be turned ON/OFF from Field Assistant or from the network. Once turned ON, other entries may be made with the display or through the network. To turn Service Test on, change the value of Test Mode to ON, to turn Service Test off, change the value of Test Mode to OFF.

Service Test allows testing of each controller output.

Binary Service Test functions are on when the Default Value is set to Enable and off when set to Disable.

The output of the Analog Service Test is controlled by percentage (0 to 100%) entered into the Default Value.

It is recommended to return every Service Test variable to Disable or 0.00 after testing each function (unless that test variable must be active to test a subsequent function, as in Compressor 2 Test).

All outputs return to normal when Service Test is set to Disable.

FAN TEST

This point allows the board's fan output to be manually turned On (Enable) and Off (Disable). Other test points that require the fan for operation will automatically turn the fan on and this point will still show “Disable.” Fan test can operate simultaneously with other Service Test Points. For units equipped with variable speed fans, the fan test will operate the unit's fan at minimum VFD output speed.

HIGH SPEED FAN TEST

Use the High Speed Fan Test to activate and deactivate the Supply Fan (BO-1) output. Note that this output is only applicable if Fan Control is set to Two Speed and Unit Type is NOT equal to HP O/B Ctrl.

COMPRESSOR 1 AND COMPRESSOR 2 TEST

The compressor test points are used to change output status for the individual compressors. Compressor starts are not staggered. The fan and heating service test outputs are reset to “Disable” for the compressor service tests. The Indoor fan and outdoor fans are controlled normally to maintain proper unit operation. All normal cooling alarms and alerts are functional.

HEAT 1 AND HEAT 2 TEST

The heat test points are used to change output status for the individual heat stages, gas or electric. The fans and cooling service test outputs are reset to “Disable” for the heat service tests. Indoor and outdoor fans are controlled normally to maintain proper unit operation. All normal heating alarms and alerts are functional.

DEHUMIDIFICATION TEST

For units with the factory Reheat option, the dehumidification relay is used to change the output status to operate the circuits in different Reheat modes. Dehumidification relay on by itself puts all circuits running in Hot Gas Reheat dehumidification mode; dehumidification relay on and the cooling test (compressor test relays) on puts unit and or individual circuits in subcooling dehumidification mode. The fans and heating service test outputs are reset to “Disable” for the dehumidification service test. Indoor and outdoor fans are controlled normally to maintain proper unit operation. All normal cooling/dehum alarms and alerts are functional.

POWER EXHAUST TEST

This point allows the board's power exhaust (PE) output to be manually turned On (Enable) and Off (Disable). Power Exhaust test can operate simultaneously with other Service Test Points.

ECONOMIZER TEST

This point allows the board's economizer output to be manually controlled from 0 to 100% Open. Economizer test can operate simultaneously with other Service Test Points.

VFD SPEED TEST

This point activates the board's 0 to 10vdc analog output that controls the unit's supply fan VFD speed or direct drive fan.

NOTE: This output is only applicable if Fan Control is set to Variable Speed.

NOTE: Service Test Mode does not timeout. Be sure to turn off test mode or cycle power to the RTU to return to normal operation.

Configuration

The RTU Open controller's configuration points effect the unit's inputs and operation. Review and understand the meaning and purpose of each configuration point before changing it from the factory default value. Use the RTU Open controller Start-up Sheet during configuration; fill in changed values if changed from factory default. There are three main configurations menus: SETPOINT, UNIT, and SERVICE.

Each configuration point is described below under its according menu. See Appendix A for menu structure.

SETPOINT

Occupied Heating Setpoint – The heating setpoint the controller maintains during the occupied period.

Range = 40 to 90°F

Default = 70°F

Occupied Cooling Setpoint – The cooling setpoint the controller maintains during the occupied period.

Range = 55 to 99°F

Default = 76°F

Unoccupied Heating Setpoint – The heating setpoint the controller maintains during the unoccupied period.

Range = 40 to 90°F

Default = 55°F

Unoccupied Cooling Setpoint – The cooling setpoint the controller maintains during the unoccupied period,

Range = 45 to 99°F

Default = 90°F

Effective Heating Setpoint – The current setpoint value heating operation will control to:

Range = 0 to 120°F

Effective Cooling Setpoint – The current setpoint value cooling operation will control to:

Range = 0 to 120°F

Optimal Start – The earliest time prior to occupancy, at which the Optimal Start function may begin to adjust the effective setpoints. Setting this to 0 will disable optimal start.

Range = 0 to 4 hours

Default = 4 hour

Occ Relative Humidity Setpoint – The space RH setpoint the controller maintains during the occupied period.

Range = 0 to the Unocc RH setpoint

Default 60%

Unocc Relative Humidity Setpoint – The space RH setpoint the controller will maintain during the unoccupied period.

Range = 30 to 100%

Default = 95%

DCV Max Ctrl Setpoint – The difference between indoor and outdoor CO_2 level which results in maximum ventilation damper position.

Range = 0 to 9999ppm

Default = 650ppm

Power Exhaust Setpoint – Used to determine when the power exhaust operation will begin. This setpoint is based on the maximum fan speed. When the economizer position opens above this point, power exhaust operation will begin and when the damper position falls 5% below this point, the power exhaust will shutdown.

Range = 20 to 90%

Default = 50%

NOTE: This setpoint is automatically adjusted if the Fan Type is set to Variable Speed or 2-Speed in order to maintain proper building pressure. The actual calculated value, Calculated PE Setpoint, is shown in MAINTENANCE.

NOTE: This point is only used when Continuous Occupied Exhaust = NO

UNIT

Fan Mode – Sets the operation of the indoor fan when not in cooling or heating mode. Refer to fan operation for details on each operation.

Range = Auto, Continuous, or Always On

Default = Continuous

Power Fail Restart Delay – Sets how long the controller delays normal operation after the power is restored. Typically used to prevent excessive demand when recovering from a power failure.

Range = 0 to 30 sec

Default = 5 sec

Fan Off Delay – Time delay in which the fan will continue run after being commanded off.

Range = 10 to 300 sec

Default = 90 sec

Minimum Cooling SAT – The supply air temperature must remain above this value to allow cooling with the economizer and/or compressors. There is 5°F plus and minus deadband to this point. If the SAT falls below this value during cooling a compressor stage will be removed and/or the economizer will return to minimum position.

Range = 45 to 75°F

Default = 50°F

Maximum Heating SAT – The supply air temperature must remain below this value to allow heating. There is 5°F plus and minus deadband to this point. If the SAT falls below this value during heating the heat stages will begin to decrease until the SAT has dropped below this value.

Range = 85 to 150°F

Default = 120°F

Vent Dmpr Pos / DCV Min Pos – Minimum damper position for ventilation during the occupied period when the fan is operating at full speed.

Range = 0 to 100% open

Default = 20% open

Economizer Purge Min Pos – The damper position used during the Pre-Occupancy Purge cycle prior to occupancy when Pre-Occupancy purge is active.

Range = 0 to 100% open

Default = 40% open

Low Fan Econ Min Pos – The minimum damper position used for ventilation during the occupied period when the fan is operating at it's lowest speed.

Range = 0 to 100% open

Default = 33% open

NOTE: This setpoint is only applicable if the Fan Type is set to Variable Speed or 2-Speed.

DCV Max Vent Damper Pos – This is the greatest position the economizer can open to while trying to control the indoor air quality levels.

Range = 0 to 75% open

Default = 50% open

Supply Fan Service Alarm Timer – The timer set for the Supply Fan Runtime Alarm. After the number of hours set on this point is exceeded the corresponding alarm will be generated, and must be manually cleared in the maintenance menu after the maintenance has been completed. The timer will then begin counting its runtime again for the next due maintenance.

Range = 0 to 9999 hr

Default = 600 hr

NOTE: If set to 0 hr this setpoint is disabled and its alarm will never be generated.

Comp 1 Service Alarm Timer – The timer set for the Compressor 1 Runtime Alarm. After the number of hours set on this point is exceeded the corresponding alarm will be generated, and must be manually cleared in the maintenance menu after the maintenance has been completed. The timer will then begin counting its runtime again for the next due maintenance.

Range = 0 to 9999 hr

Default = 0 hr

NOTE: Default = 0 hours, if set = 0 hr this point is disabled and its alarm will never be generated.

Comp 2 Service Alarm Timer – The timer set for the Compressor 2 Runtime Alarm. After the number of hours set on this point is exceeded the corresponding alarm will be generated, and must be manually cleared in the maintenance menu after the maintenance has been completed. The timer will then begin counting its runtime again for the next due maintenance.

Range = 0 to 9999 hr

Default = 0 hr

NOTE: Default = 0 hours, if set = 0 hr this point is disabled and its alarm will never be generated.

Filter Service Alarm Timer – The timer set for the Dirty Filter Alarm. After the number of hours set on this point is exceeded the corresponding alarm will be generated, and must be manually cleared in the maintenance menu after the maintenance has been completed. The timer will then begin counting its runtime again for the next due maintenance.

Range = 0 to 9999 hr

Default = 600 hr

NOTE: Default = 600 hours, if set = 0 hr this point is disabled and its alarm will never be generated.

Pushbutton Override – Set to enable or disable the pushbutton override function of the locally installed space sensor.

Range = Disable/Enable

Default = Enable

Door Alarm Delay – Determines the amount of delay before a door alarm is generated.

Range = 0 to 3600 seconds

Default = 60 seconds

Setpoint Adjustment – Set to enable or disable the setpoint adjustment function of the locally installed space sensor.

Range = Disable/Enable

Default = Enable

Setpoint Adjustment Range – Sets the slider range of a space sensor (with built in function). The slider is used to offset the control setpoint.

Range = 0 to 5°F

Default = 5°F

Cooling Lockout Temperature – This defines the minimum outdoor air temperature that cooling mode can be enabled and run. If the OAT falls below this number during cooling the compressors will be de-energized.

Range = –65 to 80°F

Default = 45°F

Economizer High OAT Lockout Temp – If the outdoor air temperature rises above this value, economizer cooling will be disabled and dampers will return and stay at minimum position.

Range = 55 to 80°F

Default = 75°F

Heating Lockout Temperature – This defines the maximum outdoor air temperature that heating mode can be enabled and run. If the OAT rises above this number during heating the heat stages will be de-energized.

Range = 35 to 150°F

Default = 65°F

Pre-Occupancy Purge – Enables or disables the use of a purge cycle immediately prior to the start of a scheduled occupied period.

Range = Enable/Disable

Default = Disable

Purge Time – The maximum amount of time used for a pre-occupancy purge.

Range = 0 to 240 minutes

Default = 60 minutes

Unocc Free Cool Enable – Set to enable or disable the economizer for night time free cooling (NTFC) operation.

Range = Disable/Enable

Default = Disable

Setpoint Separation – Sets the minimum separation gap in which setpoints can be set.

Range = 2 to 10°F

Default = 5°F

Occupancy Source – Tells the controller which method of occupancy control to use in determining occupancy of the rooftop. Refer to Occupancy in the operation section for detail on each specific operation function.

Range = Always Occupied, BACnet Schedule, BAS On/Off, or Remote Occ Input

Default = Always Occupied

INPUTS

Input 1 Function – This input is an analog input and can be configured to be one of four different inputs: No Sensor, IAQ Sensor, OAQ Sensor, or Space RH Sensor. Input 1 is wired to pin J4-4,5,6.

Default = No Sensor

Input 2 Function – This input is an analog input and can be configured to be one of four different inputs: No Sensor, IAQ Sensor, OAQ Sensor, or Space RH Sensor. Input 2 is wired to pin J4-1,2,3

Software Default = No Sensor

Factory Default = IAQ Sensor with factory-installed CO_2 sensor

NOTE: For Inputs 1 and 2, if using Bryant air quality sensors do not use 24Vdc from RTU Open board. External 24Vdc power supply required.

Input 3 – This input is a discrete input and can be configured to be one of six different functions: No Function, Compressor Safety, Fan Status, Filter Status, Remote Occupancy, or Door Contact. This input can also be configured to be either a Normally Open (N/O) or a Normally Closed (N/C) switch. Input 3 is factory wired to pin J1-2. Field accessories can be wired to its parallel pin J5-5.

Factory Default = Compressor Safety and N/O

Input 5 – This input is a discrete input and can be configured to be one of six different functions: No Function, Fire Shutdown, Fan Status, Filter Status, Remote Occupancy, or Door Contact. This input can also be configured to be either a Normally Open (N/O) or a Normally Closed (N/C) switch. Input 5 is factory wired to pin J1-10. Field accessories can be wired to its parallel pin J5-3.

Software Default = Fire Shutdown and N/C

Factory Default = Fire Shutdown and N/O

Input 8 – This input is a discrete input and can be configured to be one of six different functions: No Function, Enthalpy Switch, Fan Status, Filter Status, Remote Occupancy, or Door Contact. This input can also be configured to be either a Normally Open (N/O) or a Normally Closed (N/C) switch. Input 8 is factory wired to pin J2-6. Field accessories can be wired to its parallel pin J5-1.

Software Default = Enthalpy Switch and N/O

Factory Default = No Function and N/O without factory-installed enthalpy sensor

Input 9 – This input is a discrete input and can be configured to be one of seven different functions: No Function, Humidistat, Fan Status, Filter Status, Remote Occupancy, Door Contact, or IGC Override. This input can also be configured to be either a Normally Open (N/O) or a Normally Closed (N/C) switch. Input 9 is factory and field wired to pin J5-7.

Factory Default = Humidistat and N/O

Space Sensor Type – This tells the controller what type of space sensor is installed to run the unit. The four types that can be used are: a standard 10k Type II thermistor (T55), sensor with a setpoint offset slider bar (T56), or a communicating sensor (SPT Sensor) and, ZS Sensor.

Range = T55, T56 (Use for T59), SPT Sensor, or ZS Sensor

Default = T55

ZS Sensor Type – The type of local space temperature sensor.

Range = ZS Base, ZS Plus, ZS Pro

Default = None

T5x Override Duration – Sets the override time duration the unit will change from unoccupied to occupied when the override button is pushed on the space sensor.

Range = 0-24 hours

Default = 1 hour

Rnet Port – input for communicating sensor

Range = SPT Sensor or ZS Sensor

Default = None

SERVICE CONFIGURATION

Unit Type – This tells the control what type of unit it is controlling. Heat/Cool refers to gas and electric heat units. HP O/B Ctrl refers to a heat pump unit which requires reversing valve control. HP Y1/W1 Ctrl refers to a heat pump unit whose reversing valve is built in to the cooling or heating call. This decision is factory configured for the specific unit type as supplied.

Economizer Exists – This indicates if there is an economizer installed on the unit.

Factory Default = NO if no economizer, or YES if there is an economizer installed.

Fan Control – This refers to the type of fan control for the unit.

Factory Default = Variable Speed for 582K/559K/547K and 581K/551K/549K units

VFD Input – Defines the electrical control signal used by the VFD's input. Applies to Variable Speed fan control only.

Range = 2-10VDC or 0-10VDC

Factory Default = 2-10 VDC and 0-10VDC on 582K/559K/547K and 581K/551K/549K units

Show VFD Config As – Sets the VFD control in terms of Percentage for typical VFDs or Voltage for ECM motor control.

Factory Default = Percentage

IDF Max Speed Voltage – This is the maximum voltage output for control of the fan while using voltage terms. Applicable when using variable speed fan control and voltage control type.

Factory Default = 10Vdc

IDF Min Speed Voltage – This is the minimum voltage output for control of the fan while using voltage terms. Applicable when using variable speed fan control and voltage control type.

Factory Default = 5.2Vdc

IDF Heat Speed Voltage – This is the heating mode desired voltage output for control of the fan while using voltage terms. Applicable when using variable speed fan control and voltage control type.

Factory Default = 5.2Vdc

Max VFD Output – The maximum VFD signal the RTU Open controller supplies to the VFD as a percentage of its range. The balancer can set this to adjust the unit's maximum airflow. Applies to Variable Speed fan control.

Range = 33 to 100%

Default = 100%

Min VFD Output – The minimum VFD signal he RTU Open controller supplies to the VFD as a percentage of its range. The balancer can set this to adjust the unit's minimum airflow. Applies to Variable Speed fan control only.

Range = 33 to 100%

Default = 40%

Heating VFD Output – This is the heating mode desired percentage output for control of the fan while using percentage terms. Applicable when using variable speed fan control and percentage control type.

Factory Default = 100%

Stage 1 SAT Setpoint – The VFD Supply Air Setpoint during stage 1 cooling. Must be at least 4°F greater than Minimum Cooling SAT parameter.

Range = 45 to 75°F

Default = 57°F

Stage 2 SAT Setpoint – The VFD Supply Air Setpoint during stage 2 cooling. Must be at least 4°F greater than Minimum Cooling SAT parameter.

Range = 45 to 75°F

Default = 57°F

Stage 3 SAT Setpoint – The VFD Supply Air Setpoint during stage 3 cooling. Must be at least 4°F greater than Minimum Cooling SAT parameter.

Range = 45 to 75°F

Default = 56°F

Heat Type – Indicates the type of heat which is installed in the unit. Electric is any unit without gas and a Gas unit is one which requires gas input for heating.

Factory Default = Gas for gas units and Electric for all other units (cooling only units and heat pumps)

Number of Heat Stages – Indicates how many heat stages are available for use. See configuration in Appendix A for details on specific unit configuration.

Factory Default =1 for single heat stage units
2 for dual stage units
0 for cooling only units

SA Tempering – Supply Air Tempering allows heating, if installed, to temper OA while unit is in Fan Only, IAQ Override, or Purge Modes.

Factory Default = Disable

Continuous Occupied Exhaust – This point tells the controller when to run the power exhaust if equipped on the unit.

If set to YES, the power exhaust will be on all the time when in occupied mode and will be off when in unoccupied mode. If set to NO the power exhaust will be controlled by the Power Exhaust Setpoint.

Default = NO

RH Control – Enables dehumidification control if an RH sensor is available and the unit has the Perfect Humidity dehumidification option installed.

Range = Disable/Enable

Default = Disable (Enabled with Perfect Humidity option)

DCV Control – Enables demand controlled ventilation (DCV) if valid CO_2 sensor value is available and the unit has an economizer installed.

Range = Disable/Enable

Default = Disable

System Space Temperature – The network space temperature value that the controller is using for control (if applicable).

Range = N/A

Default = -999.0°F

System Space RH – The network relative humidity value that the controller is using for control (if applicable).

Range = N/A

Default = -999.0%

System Space AQ – The network indoor air quality (CO_2) value that the controller is using for control (if applicable)

Range = N/A

Default = -999.0 PPM

System Cool Demand Level – The system cool demand level being received over the network.

Range = N/A

Default = 0-3

System Heat Demand Level – The system heat demand level being received over the network.

Range = N/A

Default = -0-3

System Outdoor Air Temperature – Allows the outdoor air temperature value to be network readable when enabled. Requires the RTU Open controller system to be equipped with an outdoor air temperature sensor.

Range = N/A

Default = -999.0°F

System Outdoor AQ – Allows network readable value of OAQ for calculation during differential OAQ CO_2 levels and IAQ CO_2 levels to drive the IAQ control.

Range = N/A

Default = -999.0 PPM

System Fire/Smoke – Allows network readable fire/smoke signal to invoke shutdown action in the RTU Open controller.

Range = N/A

Default = OFF

Indoor CO_2 Sensor Value @ Min mA – Sets the indoor CO_2 value when the board reads 4 mA at input 1 or 2.

Range = 0 to 9999 ppm

Default = 0 ppm

Indoor CO_2 Sensor Value @ Max mA – Sets the indoor CO_2 value when the board reads 20 mA at input 1 or 2.

Range = 0 to 9999 ppm

Default = 2000 ppm

Outdoor CO_2 Sensor Value @ Min mA – Sets the outdoor CO_2 value when the board reads 4 mA at input 1 or 2.

Range = 0 to 9999 ppm

Default = 0 ppm

Outdoor CO_2 Sensor Value @ Max mA – Sets the outdoor CO_2 value when the board reads 20 mA at input 1 or 2.

Range = 0 to 9999 ppm

Default = 2000 ppm

NOTE: The indoor and outdoor min and max mA setting are used to set the linear curve of mA vs. PPM.

OPERATION

The RTU Open controller will control the compressors, economizer and heating outputs based on its space temperature input and setpoints. It can also be controlled by a building control system or zoning system. An optional CO_2 IAQ sensor mounted in the space can influence the economizer minimum position. The RTU Open controller has a hardware clock that can allow scheduling for stand-alone operation. The RTU Open controller's default is to control to occupied setpoints all the time, until a type of occupancy control is set. The following sections describe the operation for the functions of the RTU Open controller.

Occupancy

Occupancy is the fundamental overall control of equipment. The unit can be in one of two states: Occupied or Unoccupied. These are usually referred to as periods because they represent periods of any given day. Before the RTU Open controller can operate specific functions of the equipment it is installed on, occupancy must be determined. There are four different ways the RTU Open controller can determine occupancy. These are described below and selected by the configuration point Occupancy Source.

ALWAYS OCCUPIED (DEFAULT)

The unit will not determine occupancy and continuously run in the occupied state or period. The RTU Open controller ships from the factory with this setting to allow immediate operation.

BACnet SCHEDULE

When Occupancy Source is set to BACnet Schedule, the RTU Open controller will use a schedule to change occupancy based upon a day of week and a time period. Local time and date should be set in the RTU Open controller for this function to operate properly. This function applies if setting a local schedule in the RTU Open controller or if applying the unit to a Building Automation System or an Open zoning system. An Open network schedule can override a local schedule within the unit. A space sensor push button override is only available when running a local or Open schedule. The push button will override an unoccupied period to occupied for the specified time duration.

BAS ON/OFF

When Occupancy Source is set to BAS On/Off, the RTU Open controller follows occupancy based on an On/Off command to the BAS ON/OFF software point. An on command sets the occupancy to occupied, and an off command sets it to unoccupied. The Building Automation System can be speaking BACnet, Modbus, N2, or LON and is writing to the BAS On/Off point in the open protocol point map.

REMOTE OCC INPUT

When Occupancy Source is set to Remote Occ Input, the RTU Open controller follows occupancy based on the remote occupancy switch input. Inputs 3, 5, 8, and 9 on plug J5 can be hard-wired to command the unit's occupancy. The Occupancy Contact point show the status as on or off, on is occupied and off is unoccupied.

Indoor (Supply) Fan

The indoor fan can be configured to operate in three different manors. The configuration point Fan Mode determines how the fan will run. The fan will always be disabled if a fire shutdown or safety chain alarm is active. A valid space temperature and supply air temperature must be available for the fan to operate. There is a unit start delay in effect when the unit is transitioning from unoccupied to occupied. The following describes specific fan operation based on the Fan Mode configuration value.

AUTO

When Fan Mode is set to Auto, the RTU Open controller will cycle the fan on and off based on the demand for heating, cooling, and dehumidification. There is a configurable fan off delay that is upheld before shutting the fan off after conditioning has ended.

CONTINUOUS

When Fan Mode is set to Continuous, the RTU Open controller will cycle the fan based on occupancy. The fan will run continuously whenever the unit is occupied and operate in the auto mode during the unoccupied period.

ALWAYS ON

When Fan Mode is set to Always On, the RTU Open controller will run the fan all the time regardless of occupancy or demand.

FAN OFF DELAY

A Fan Off Delay allows the supply fan to continue operating after heating or cooling stops. If the following alarms are active, the fan turns off immediately, regardless of the occupancy state or demand:

- Fire Shutdown
- Safety Chain
- Supply Air Temp Sensor alarm

The RTU Open controller does not include smoke-control functions such as smoke-purge, zone-pressurization, or smoke-ventilation.

INDOOR (SUPPLY) FAN STATUS

The RTU Open controller has an optional Supply Fan Status input to provide proof of airflow. If this is enabled, the point will look for a contact change whenever the Supply Fan Relay is on. If it is not enabled then it will always be the same state as the Supply Fan Relay. The cooling, economizer, heating, dehumidification, CO_2 and power exhaust routines will use this input point for fan status.

Cooling

The compressor outputs are controlled by the Cooling Control PID Loop and Cooling Stages Capacity algorithm. They will be used to calculate the desired number of stages needed to satisfy the space by comparing the Space Temperature (SPT) to the Occupied Cool Setpoint plus the T56 slider offset when occupied and the Unoccupied Cool Setpoint (UCSP) plus the T56 slider offset, if unoccupied. The economizer, if available, will be used for cooling in addition to the compressors. The following conditions must be true in order for this algorithm to run:

- Outdoor Air Temperature, if valid, is greater than the Cooling Lockout Temperature setpoint.
- Indoor Fan is ON.
- Heat mode has not been active for 5 minutes.
- If occupied and the SPT > (occupied cool setpoint plus the T56 slider offset).
- Space Temperature and supply air temperature values are valid.
- If it is unoccupied and the SPT > (unoccupied cool setpoint plus the T56 slider offset).
- Economizer is unavailable, or if the Economizer is active, mechanical cooling is available if the economizer is open > 90% for at least 7.5 minutes, the SAT > [Minimum Cooling SAT + 5°F (2.7°C)] and SPT > [Effective Cooling Setpoint + 0.5°F (0.27°C)].

If all of the above conditions are met, the controller uses a PID logic loop to energize or de-energize compressors to satisfy the cooling demand.

There is a fixed 3-minute minimum on time and a 5-minute off time for each compressor output.

Any time the compressors are running the RTU Open controller will stage down the compressors if the SAT becomes less than the cooling low supply air setpoint. After a compressor is staged off, it may be started again after a normal time-guard period and the supply air temperature has increased above the low supply air setpoint.

- Cooling – Without humidity control [RH Control = Disable] or an economizer [Economizer Exists = No], the operation of the unit is as follows:

  If OAT > Cooling Lockout Temperature (45°F def) and SPT > cooling setpoint, then a PID will calculate the required number of compressor cooling stages required to satisfy the present space load conditions. After the minimum compressor off time has expired, then the first compressor stage will be started. The actual number of active compressor stages [Active Compressor Stages] is displayed in the maintenance section.

  As the compressor stage(s) operate, the controller monitors the supply air temperature and compares the measured value to the configured supply air temperature setpoint [Stage 1 SAT Stpt if Active Compressor Stages = 1, see the following table].

  The fan will begin to operate (or currently be operating) at the configured minimum fan speed [Min VFD Output]. If the measured SAT falls below this setpoint, a PID will calculate the required VFD output to increase the fan speed to obtain the configured Stage "X" SAT Stpt depending on the actual number of the operating stage (1-3). The fan speed can increase as required but not greater than the configured maximum speed [Max VFD Output or IDF Max Speed Voltage].

Active Compressor Stages	Controlling SAT Setpoint
=1	Stage 1 SAT Stpt
=2	Stage 2 SAT Stpt
=3	Stage 3 SAT Stpt

Supply Fan

The RTU Open controller supply fan may be configured for 1 of 3 Fan Control modes:

- **Single –** The fan operates at one speed only and provides on/off operation
- **Two Speed –** The fan operates at 1 of 2 speeds depending on the mode of operation and load conditions. During fan only or single stage cooling, the fan operates at low speed. During heating, dehumidification, second stage cooling, or if maximum economizer operation is required, the fan operates at high speed. This control mode is used with 580J/558J/548J and 581J/551J/549J when the 2-Speed Indoor Fan option is provided.
- **Variable Speed –** The fan operates at a variable speed to meet the load conditions and SAT safety requirements to provide maximum energy savings by minimizing fan horsepower consumption. Fan speed is NOT controlled by static pressure. This setting is default for 582K/559K/547K and 581K/551K/549K units.

The RTU Open controller supply fan may be configured for 1 of 3 Fan Modes:

- **Auto –** The fan cycles on/off in conjunction with heating or cooling.
- **Continuous –** The fan runs continuously during occupancy and intermittently during unoccupied periods with heating and cooling.
- **Always On –** The fan runs continuously regardless of occupancy or calls for heating and cooling.

Occupancy can be determined by BACnet schedules, BAS schedules, or in response to a remote occupancy switch.

A Fan Off Delay allows the supply fan to continue operating after heating or cooling stops.

If the following alarms are active, the fan turns off immediately, regardless of the occupancy state or demand:

- Fire Shutdown
- Safety chain
- SAT sensor alarm
- SPT sensor alarms

The RTU Open controller does not include smoke-control functions such as a smoke-purge, zone-pressurization, or smoke-ventilation. Each of these modes require a field-designed circuit to operate the following by local fine codes:

- RTU supply fan
- RTU economizer
- RTU power exhaust

The RTU Open controller many be configured to accept a Supply Fan Status input to provide proof the supply fan is operating. When enabled, a loss or lack of fan status will stop heating and cooling operation.

A supply Fan Alarm Service Timer function is available to track the number of supply fan run hours and generate an alarm when the accumulated runtime exceeds the set threshold.

Economizer

The Economizer dampers are used to provide free cooling when the outside conditions are suitable and Indoor Air Quality, if optional CO_2 sensor is installed.

The following conditions must be true for economizer operation:

- Indoor Fan is on.
- Enthalpy is Low if the Enthalpy input is enabled.
- SAT reading is available.
- OAT reading is available.
- SPT reading is available.
- OAT <= High OAT economizer lockout configuration (default = 75).
- OAT <= SPT

If any of the mentioned conditions are not true, the economizer will be set to its configured minimum position.

If the RTU Open controller is configured for VFD or 2-speed fan, and the fan is on or at the highest speed, or if the unit is configured for single-speed fan, then the economizer will use the Vent Dmpr Pos/DCV Min Pos setpoint as the minimum economizer position when occupied. If the unit is configured for VFD or 2-speed fan, and the fan is on or at the lowest speed, the economizer will use the Low Fan Econ Min Pos.

The minimum damper position can be overridden by the IAQ routine described later in this section.

If the above conditions are true, the Economizer control will calculate a damper position starting with a minimum vent position and based on current space temperature and a setpoint that is one degree less than the effective cool setpoint. If the SAT drops below the cooling low supply air setpoint (+ 5°F), the economizer will close as required but not to less than the to minimum position. The Calculated Min Econ Pos used for control is displayed in the Maintenance section.

The RTU Open controller provides Fault Diagnostic and Detection (FDD) for economizer operation in compliance with California Title 24. The FDD logic will detect an economizer that fails to close, fails to open, stuck fully open, and fails to fully open. Each condition will cause an Economizer Operation alarm to occur and the specific condition will be displayed.

Enthalpy Control

You may use an enthalpy switch to indicate the suitability of outdoor air for economizer cooling. You can use either an outdoor air or differential enthalpy switch. A differential enthalpy switch has a sensing device in both the outdoor and return air streams. A differential enthalpy switch indicates when outside air is more suitable to be used than the return air and is available for economizer cooling. If no enthalpy switch is configured, a network point (Object Name: oae) is available.

The sequence of operation for economizer cooling is the same with or without an enthalpy switch, except that an enthalpy switch imposes one more validation on the suitability of outside air for economizer cooling. An Enthalpy Status that is High disables the economizer and the outside air damper goes to its minimum position. An Enthalpy Status that is Low enables the economizer if a call for cooling exists and the remaining preconditions are met.

Space Air Quality

Space Air Quality (AQ) is controlled on rooftop equipment using the economizer. The Space AQ sequence utilizes an air quality (CO_2) sensor to monitor conditions within the occupied space. A CO_2 sensor may be terminated at the RTU Open controller, or a subordinate zone controller, when part of a zoned system.

An outdoor air quality sensor may also be installed and terminated at the RTU Open controller, but is not required. When an outdoor air quality sensor is not installed, the algorithm uses 400ppm as the fixed outdoor air CO_2 level.

The following conditions must be true for the Space AQ algorithm to operate:

- The system is occupied
- The supply fan has been operating for at least 30 seconds
- The Space AQ sensor has a valid reading

As the air quality in the space decreases (Space AQ CO_2 value increases), the minimum position of the economizer increases, allowing more outdoor air to enter the space. The amount of increase depends on the relationship between the Space AQ level and the DCV Max Ctrl Setpoint.

The Space AQ algorithm calculates a minimum position value using a PID loop. The CO_2 minimum damper position is then compared against the Vent Dmpr Pos / DCV Min Pos setpoint and the greatest value becomes the minimum damper position utilized for the economizer. When the minimum economizer position is being reset by the Space AQ algorithm, the System Mode displays IAQ Override.

The maximum amount the economizer may be opened to outdoor air by the Space AQ algorithm is limited by the DCV Max Vent Damper Pos, which is adjustable between 10 and 75%.

Power Exhaust

The RTU Open controller may enable and disable an exhaust fan based on either the controller's occupancy or its economizer damper position. If configured for continuous occupied operation, it will be energized whenever the controller is in the occupied mode and disabled when in the unoccupied mode. If configured for damper position control, it will be energized whenever the economizer exceeds the power exhaust setpoint and disabled when the economizer drops below the setpoint by a fixed hysteresis of 10%. If the Fan Control is set to Two Speed or Variable Speed, the Power Exhaust Setpoint is automatically adjusted based on the fan's air delivery. The Calculated PE Setpoint used for control is displayed in the Maintenance section.

Pre-Occupancy Purge

Pre-Occupancy Purge allow the rooftop equipment with an economizer damper to utilize outdoor air to purge the space of contaminates just prior to the beginning of the occupied period.

- The following conditions must be true for pre-occupancy purge to operate:
- Pre-Occupancy Purge set to Enable
- Economizer Exists set to Yes
- The local time schedule is currently unoccupied and the remaining time is less than the configured Purge Time

When the RTU Open controller schedule is unoccupied and the remaining unoccupied time is less than the purge time, the supply fan starts. The economizer damper opens to the configured Economizer Purge Min Pos. The RTU Open controller continues to operate in this mode until the occupied start time is reached. The Pre-Occ Purge state is displayed in the Maintenance section.

Heating

The heat outputs are controlled by the Heating Control PID Loop and Heating Stages Capacity algorithm. They will be used to calculate the desired number of stages needed to satisfy the space by comparing the SPT to the Occupied Heat Setpoint the T56 slider offset when occupied and the Unoccupied Heat Setpoint plus the T56 slider offset if unoccupied. The following conditions must be true in order for this algorithm to run:

- Indoor Fan is ON for any unit with electric heat.
- Cool mode has not been active for 5 minutes.
- If occupied and SPT <(occupied heat setpoint plus T56 slider offset)
- SPT and supply air temperature values are available
- If it is unoccupied and the SPT < (unoccupied heat setpoint plus T56 slider offset).
- OAT < High OAT lockout temperature.

If all of the above conditions are met, the controller uses a PID logic loop to energize or de-energize heat outputs to satisfy the heat demand. If the SAT begins to exceed the high supply air setpoint, a ramping function will cause the Heat Stages Capacity algorithm to decrease the number of stages until the SAT has dropped below the setpoint. There is a fixed one minute minimum on time and a one minute off time for each heat output. There is a 10 minute minimum stage up delay if the heat demand is ≤ 3°F, and a 2 minute minimum stage up delay if heat demand is > 3°F.

When set for Variable speed, the Supply fan output will start with the Heating VFD Output/IDF Heat Speed Voltage and ramp up as needed if the SAT approaches the Maximum SAT setting.

Indoor Air Quality

If the optional indoor air quality sensor is installed, the RTU Open controller will maintain indoor air quality within the space at the user configured differential set point. The set point is the difference between the indoor air quality and an optional outdoor air quality sensor. If the outdoor air quality is not present then a fixed value of 400ppm is used. The following conditions must be true in order for this algorithm to run:

- The mode is occupied.
- Indoor Fan is ON.
- Indoor Air Quality is a valid reading.

As air quality within the space decreases, the minimum position of the economizer damper will be increased thus allowing more outdoor air into the space depending on the relationship of the indoor air quality to the differential setpoint. If all the above conditions are true, the IAQ algorithm will run and calculates an IAQ minimum position value using a PID loop. The

IAQ minimum damper position is then compared against the user configured economizer minimum position and the greatest value becomes the final minimum damper position of the economizer output.

If the IAQ minimum position calculated by the control is greater than the DCV Max Vent Damper Pos configured, then it will be clamped to the configured value.

Dehumidification

The RTU Open controller will provide occupied and unoccupied dehumidification only on units that are equipped with the Perfect Humidity system option from the factory. This function requires a space relative humidity sensor or a humidistat for control. The space relative humidity sensor can be installed and configured as one of the two analog input channels (inputs 1 or 2 on J4), or a humidistat can be installed and configured as switch input 9 on J5. When using a relative humidity sensor to control dehumidification, occupied or unoccupied dehumidification setpoints are use accordingly. When using a humidistat, setpoints are not used and the dehumidification call comes when the humidistat indicates high humidity.

When the indoor relative humidity becomes greater than the dehumidification setpoint (or switches from low to high), a demand for dehumidification demand is identified. Compressor state is monitored and time guards are honored. If a compressor was just turned off prior to the dehum call the dehumidification output will be delayed the 5 minute minimum off time of the compressor. When ok to dehumidify, the dehumidification output (J11-7, 8) will be energized. This will bring on the supply fan (at high fan speed if Fan Control is set to “Two Speed” or “Variable Speed”), all compressors, and the dehumidification relay placing the unit in Hot Gas Reheat dehumidification mode. If dehumidification is called for during cooling or cooling is called for during dehumidification, the unit will run in Subcooling dehumidification mode. Individual unit circuits can be in different dehumidification modes based on the demand. Refer to the base units operation for additional information.

NOTE: There is a fixed 5% hysteresis that the indoor relative humidity must drop below the active setpoint to end the dehumidification mode and de-energize the dehumidification output. The output will also de-energize if the fan relay is de-energized.

Demand Limit

If the RTU Open controller receives a level 1 (one degree offset), 2 (two degree offset), or a 3 (4 degree offset) to the BACnet demand limit variable, the controller will outwardly expand the heating and cooling setpoints by the configured demand limit setpoint value and remain in effect until the BACnet demand limit variable receives a 0 value.

Unoccupied Free Cooling

When the unit is equipped with an economizer, the control can run a night time free cooling (NTFC) mode called Unocc Free Cooling. In this mode the damper is utilized to bring in outdoor air for free cooling during unoccupied periods. The following conditions must be true for unoccupied free cooling to operate:

- Unocc Free Cool Enable set to Enable
- The system is unoccupied
- The outside air temperature is below the Economizer High OAT Lockout Temp
- The outside air temperature is less than the space temperature
- Enthalpy (if enabled) is Low

When the RTU Open controller’s schedule is unoccupied and the space temperature rises at least 1 degree above the Occupied Cooling Setpoint, the supply fan starts. The economizer damper opens as necessary to cool the space. The RTU Open controller continues to operate in this mode until the space is satisfied or the outside air conditions are no longer suitable for free cooling.

Optimal Start

The RTU Open controller utilizes Learning Adaptive Start which adjusts the effective setpoints to achieve the occupied setpoints by the time scheduled occupancy begins. The Learning Adaptive algorithm works by moving the unoccupied setpoints toward the occupied setpoints. The rate at which the setpoints move is based on the outside air temperature, design temperatures, and capacities. The Optimal Start recovery period may begin as early as 4 hours prior to occupancy. To disable Optimal Start, set the optimal start type to None. The following conditions must be true for optimal start to operate:

- Under SETPOINT, Optimal Start Value must be set greater than zero
- The Optimal Start type must not be None
- The system is unoccupied
- The RTU Open controller has a valid outside air temperature
- The RTU Open controller is running occupancy based on a local occupancy schedule, where next time occupied is known.

Fire Shutdown

Fire Shutdown may be configured on Binary Input 5. A typical application involves a smoke detector or fire shutdown contact, which, when active, immediately shuts down equipment operation.

Compressor Safety

Compressor Safety may be configured on Binary Input 3. This feedback can be provided by a Compressor Lock-Out (CLO) device or current switch when field installed. A Compressor Safety Alarm indicates that the equipment requires attention. Cooling, heating, and supply fan outputs are not interrupted. Normal operation resumes when the compressor safety circuit is de-energized.

Fan Status

Fan Status may be configured on any unused binary input channel. A typical application would be an airflow switch, current sensing relay, or other device that provides a supply fan running verification. Enabling this function displays the supply fan's status on the equipment graphic. If the controller loses fan status during operation, heating and cooling are disabled, the economizer damper (if available) is closed, and an alarm for loss of status is indicated. If the fan status is on when the controller is commanding the fan off, the unit remains in the off state. An alarm is generated indicating that the fan is running when it should be off.

Filter Status

Filter status may be configured on any unused binary input channel. A typical application is a differential pressure switch that senses the pressure drop across a filter bank. When the pressure across the filter bank exceeds the setpoint of the differential pressure switch, the Filter status is displayed as Dirty on the controller graphic. An alarm indicates a dirty filter.

Door Switch

A Door Contact may be configured on any unused binary input. A typical application is an occupancy sensor mounted within the space served by a single zone rooftop. Door Contact disables mechanical cooling and electric or gas heating, when active. Economizer cooling, if available, continues to operate. A configurable Door Alarm Delay is provided to prevent immediate action. The default is set to 60 seconds.

Remote Occupancy

Remote occupancy may be configured on any unused binary input channel. A typical application is a remote contact, controlled by a third party, or an occupancy sensor to set the controller's occupied mode. The Remote Occupancy function

requires both an input configured for Remote Occupancy, and Occupancy Source set to Remote Occ Input to operate. Once configured, the controller will operate in the occupied or unoccupied mode, as determined by the state of the Remote Occupancy input.

TROUBLESHOOTING

General

The RTU Open controller acts as an intelligent embedded thermostat to the rooftop unit, but can be monitored and controlled from a third party network. This causes the system as a whole to be troubleshot from three points of view. The three parts to the system are the rooftop unit, the Open controller, and the network connected. Determining which part needs to be troubleshot is the first step.

The Open controller can be used to troubleshoot the rooftop unit and/or itself with service test, communicating LED's, and built in alarms. Disconnecting the RTU Open controller from the network may also help troubleshooting the controller and rooftop unit. Third Party Network troubleshooting may also be required. For base unit troubleshooting, refer to specific base unit Service Maintenance manual.

There is an on-board battery that is used for RAM and clock back-up (see Fig. 1). It is a 3-volt lithium battery (CR2032). The average life is 7 years with a minimum of 10,000 hours of back-up. When the RTU Open board is powered up, the battery is not being used. If power is lost, the battery backs up the time clock.

REPLACING THE RTU OPEN CONTROLLER BATTERY

To determine when to replace the battery, remove and measure the voltage. If the voltage is below 2.9 volts, replace the battery.

⚠ CAUTION

UNIT OPERATION HAZARD

Power must be ON to the RTU Open controller when replacing the battery or date, time, and trend data will be lost.

1. Remove the battery from the controller, making note of the battery's polarity.
2. Insert the new battery, matching the battery's polarity with the polarity indicated on the RTU Open controller.

Thermistor Troubleshooting

The RTU Open controller uses thermistors to sense temperatures for control operation of the unit. Resistances at various temperatures are listed in Table 2. Thermistor pin connections are shown in Table 1. Thermistors are used for supply air temperature (SAT), outdoor air temperature (OAT), and space temperature (SPT) and all must be a 10 kilo-ohm type II sensor.

To check accuracy, use a high quality digital volt-ohmmeter. Connect the meter to the thermistor leads to obtain a resistance value. Use Table 2 to convert that resistance to a temperature. Next step is to measure temperature at probe location with an accurate thermocouple-type temperature-measuring instrument. Temperature measured by thermocouple and temperature determined from thermistor voltage reading should be close, within 5°F if care was taken in applying thermocouple and taking readings. If a sensor must be corrected, use the RTU Open controller calibration function to offset the temperature reading.

Table 2 — Thermistor Resistance vs Temperature Values for SPT Sensor, SAT Sensor, and OAT Sensor

TEMP (C)	TEMP (F)	RESISTANCE (Ohms)
–40	–40	335,651
–35	–31	242,195
–30	–22	176,683
–25	–13	130,243
–20	–4	96,974
–15	5	72,895
–10	14	55,298
–5	23	42,315
0	32	32,651
5	41	25,395
10	50	19,903
15	59	15,714
20	68	12,494
25	77	10,000
30	86	8,056
35	95	6,530
40	104	5,325
45	113	4,367
50	122	3,601
55	131	2,985
60	140	2,487
65	149	2,082
70	158	1,752

Software Version

During Start-up and throughout the life of the equipment, it may be necessary to obtain the RTU Open software version. To do this a module status (Modstat) must be run on the controller. This can be done from Field Assistant. An example of the beginning lines of a Modstat is shown in Fig. 19. The application software version shows the current running software of the board. In this case the rtum2_iv6-_iv5-5_06_20180828 refers to RTU Open software version 5-5_06_20180828. The last 8 digits of the number refer to a date (YYYYMMDD). The first 4 digits are the year (2018) and the month and day (0828), so this version is August 28, 2018.

```
12/10/2019  12:12:53            CM: 1

Device Instance: 1610101

Downloaded by: AppLoader AppLoader 12/10/19 05:53 AI654321

Application Software Version: PRG:rtum2_iv6_V5-5_06_20180828

Flash Archive Status: Valid on 12/10/19 07:03:07

1 PRGs initialized.  1 PRGs running.

Module status:
Firmware sections validated in flash memory
==========================================
  Boot16-H_IAR     - v2.10:001   Apr 18 2013
  RTU-OPEH DRIVER  - v6.02:028   Jan  4 2017
```

Fig. 19 — Example Modstat

Communication LEDs

The LEDs indicate if the controller is speaking to the devices on the network. The LED's should reflect communication traffic based on the baud rate set. The higher the baud rate the more solid the LED's will appear. See Table 3.

Table 3 — LEDs

The LED's on the RTU Open controller show the status of certain functions

If this LED is on...	Status is...
Power	The RTU Open controller has power
Rx	The RTU Open controller is receiving data from the network segment
Tx	The RTU Open controller is transmitting data over the network segment
BO #	The binary output is active

The **Run** and **Error** LED's indicate control module and network status

If Run LED shows...	And Error LED shows...	Status is...
2 flashes per second	Off	Normal
2 flashes per second	2 flashes, alternating with **Run** LED	Five minute auto-restart delay after system error
2 flashes per second	3 flashes, then off	Control module has just been formatted
2 flashes per second	4 flashes, then pause	Two or more devices on this network have the same MSTP network address
2 flashes per second	On	Exec halted after frequent system errors or control programs halted
5 flashes per second	On	Exec start-up aborted, Boot is running
5 flashes per second	Off	Firmware transfer in progress, Boot is running
7 flashes per second	7 flashes per second, alternating with **Run** LED	Ten second recovery period after brownout
14 flashes per second	14 flashes per second, alternating with **Run** LED	Brownout
On	On	Failure. Try the following solutions: – Turn the RTU Open controller off, then on. – Format the RTU Open controller – Download memory to the RTU Open controller – Replace the RTU Open controller

Table 4 — RTU Open Alarms

POINT NAME	BACnet Object NAME	ACTION TAKEN BY CONTROL	RESET METHOD	PROBABLE CAUSE
Safety Chain	safety_alarm	Immediate Shutdown	Automatic	Over load Indoor Fan or Electric Heater overheat
Fire Shutdown	fire_alarm	Immediate Shutdown	Automatic	Smoke detected by smoke detector or configuration incorrect
Gas Valve	igc_alarm	Immediately operate fan at highest speed	Automatic	Gas valve stuck open after heating cycle, causing heat to continue to operate.
Supply Fan	sfan_fail_alarm	Immediately disable Operation	Automatic	Tripped Circuit Breaker, Broken belt, Bad indoor fan motor, Configuration incorrect, Bad fan status switch.
Supply Fan in Hand	sfan_hand_alarm	Ramp down Operations	Automatic	Bad Fan Status Switch, Configuration incorrect.
Compressor Status	comp_alarm	Alert Generated	Automatic	Compressor would not start
Space Temp Sensor	spt_fail	Ramp down Operations	Automatic	Bad sensor, bad wiring, failure to receive Network or sensor configured incorrectly.
ZS Sensor	zst_sensor_fail	Alert Generated	Automatic	This alarm indicates a communication failure of a connected ZS sensor that previously had been actively communicating.
ZS Configuration	zs_config_fail	Alert Generated	Automatic	This alarm indicates that at least one ZS sensor is configured in the Sensor Binder properties and is not actually communicating.
Supply Air Temp Sensor	loc_sat_sensor_fail	Ramp down Operations	Automatic	Faulty, shorted, or open thermistor caused by wiring error or loose connection.
Local OAT Sensor	ioc_oat_sensor_fail	May cause Economizer and Low ambient DX cooling lockout to be disabled	Automatic	Faulty, shorted, or open thermistor caused by wiring error or loose connection.
Outdoor Air Temp Sensor	oat_fail	Economizer and Low ambient DX cooling lockout disabled.	Automatic	Failure to receive valid local or network value for Outdoor Air Temperature
Space Relative Humidity Sensor	sprh_sensor_fail	Dehumidification disabled	Automatic	Sensor reading is out of range. Bad sensor, bad wiring, failure to receive Network or sensor configured incorrectly.
Indoor Air Quality Sensor	iaq_sensor_fail	No IAQ Operation	Automatic	Sensor reading is out of range. Bad sensor, bad wiring, failure to receive Network or sensor configured incorrectly.
Outdoor Air Quality Sensor	oaq_fail	Control uses default OAQ value of 400 ppm.	Automatic	Sensor reading is out of range. Bad sensor, bad wiring, failure to receive Network value, or sensor configured incorrectly.
Economizer Operation	econ_opr	Alert Generated	Automatic	This alarm is active whenever an economizer fault is detected as required by the California Title 24 Economizer FDD logic. Economizer fault conditions include; Failed to Fully Open, Failed to Open, Failed to Close, and Stuck Open.
Space Temperature	spt_alrm_status	Alert Generated	Automatic	Space Temperature value is less than the low limit value or greater than the high limit value
Supply Air Temperature	sat_alarm	Alert Generated	Automatic	SAT is greater than the high limit value or less than the low limit value for more than 5 minutes
Setpoint Slider	slidepot_alarm	Set Offset to zero	Automatic	STO sensor is open for more than 5 seconds
Switch Configuration	di_cfg_alarm	Disable only wrong switch functions	Configure correctly	More than one discrete input is configured to provide the same function.
Analog Input Configuration	ai_cfg_alarm	Disable 4 selectable analog inputs	Configure correctly	More than one analog input is configured to provide the same function.
Space Relative Humidity	sprh_hi_alarm	Alert Generated	Automatic	Indoor RH is greater than the high limit value or less than the low limit value for more then 15 minutes
Indoor Air Quality	iaq_alarm	Alert Generated	Automatic	CO_2 ppm reading is above the configuration for 1 minute
Supply Fan Runtime	sfan_rntm_alarm	Alert Generated	zero the timer	Supply fan run time exceeded user defined limit

Table 4 — RTU Open Alarms (cont)

POINT NAME	BACnet Object NAME	ACTION TAKEN BY CONTROL	RESET METHOD	PROBABLE CAUSE
Compressor 1 Runtime	comp1_rntm_alarm	Alert Generated	zero the timer	Compressor #1 run time limit is exceeded
Compressor 2 Runtime	comp2_rntm_alarm	Alert Generated	zero the timer	Compressor #2 run time limit is exceeded
Filter	filter_alarm	Alert Generated	Automatic / reset timer	Dirty Filter, supply fan run time exceeded, filter switch configuration wrong.

Alarms

Alarms are provided to indicate a possible problem with the controller or unit. Alarms can be checked through a network and/or the local access device. All alarms are listed in Table 4 with name, object name, action taken by control, reset method, and possible cause. Some alarms can occur based on specific configurations.

SAFETY CHAIN ALARM

This alarm occurs immediately if a field installed, normally closed, safety contact opens and interrupts 24VAC signal input #4 (J1-9). The Unit Status will be Shutdown and the System Mode will be Disable. All unit operations stop immediately and will not restart until the alarm automatically clears. There are no configurations for this alarm; it is all based on field installed wiring. This alarm will not occur if Fire Shutdown Alarm is active. Normal operation resumes when the safety chain circuit is complete.

FIRE/SMOKE SHUTDOWN ALARM

This alarm occurs immediately when the smoke detector senses smoke. The Unit Status will be Shutdown and the System Mode will be Disable. All unit operations stop immediately and will not restart until the alarm automatically clears. If there is not a smoke detector installed or the smoke detector did not trip, check input configurations.

NOTE: The default function for input 5 is a normally open Fire Shutdown input.

GAS VALVE ALARM

This alarm occurs 60 second after gas heat has been de-energized but the Integrated Gas Control (IGC) board is still indicating a need for fan operation. Upon alarm detection, the fan will start immediately and run at its highest speed.

SUPPLY FAN FAILURE

This alarm occurs when the indoor fan is being command on and the fan status switch feedback is showing the fan off. This will end current operating mode and disable unit operation. This alarm requires a fan status switch to be configured on one of the inputs.

SUPPLY FAN IN HAND

This alarm occurs when the indoor fan is being commanded off and the fan status switch feedback is showing the fan is on. This will prevent any operating mode and disable unit operation. This alarm requires a fan status switch to be configured on one of the inputs.

COMPRESSOR STATUS

This alarm indicates the base unit's compressor safety circuit is energized. Cooling, heating, and supply fan outputs are not interrupted. Normal operation resumes when the compressor safety circuit is de-energized. This alarm requires field use of this described compressor safety circuit.

SPACE TEMP SENSOR

This alarm occurs if the space sensor wired to the RTU Open controller is disconnected or shorted for more than 10 seconds or if the SPT value from the Network is no longer being received. When this occurs the Unit Status will be Shutdown and the System Mode will be Run. Sensor, sensor connections, wiring, board connection, and configurations should be checked for faults or errors. Alarm will reset automatically when cause is fixed.

ZS SENSOR

This alarm occurs if the ZS sensor wired to the RTU Open controller stops communicating with the controller.

ZS Sensor – This alarm indicates a communication failure of a connected ZS sensor that previously had been actively communicating. The alarm is reset when normal ZS sensor communications resume, if power is cycled to the controller, or if the Shutdown point is set to Active.

ZS Configuration – This alarm indicates that at least one ZS sensor is configured in the Sensor Binder properties and is not actually communicating. The alarm is reset when the configured ZS sensor is communicating or the configuration is changed to reflect the sensor is no longer connected to the Rnet.

SUPPLY AIR TEMP SENSOR

This alarm occurs immediately when the supply air temperature sensor wired to the RTU Open controller is disconnected or shorted. When this occurs the Unit Status will be Shutdown and the System Mode will be Run. Sensor, sensor connections, wiring, board connection, and configurations should be checked for faults or errors. Alarm will reset automatically when cause is fixed.

LOCAL OAT SENSOR

This alarm occurs when the outdoor air sensor indicates a short or open circuit or the Network OAT value is no longer being received. Economizer cooling and optimal start functions are disabled. Normal operation resumes when the controller detects a valid sensor.

OUTDOOR AIR TEMP SENSOR

This alarm indicates that a valid OAT sensor value is no longer available to the controller after having been available previously.

Economizer Operation – This alarm is active whenever an economizer fault is detected as required by California Title 24 Economizer FDD logic. Once detected, this alarm will stay active until the Shutdown input is set to Active or the fan is stopped.

Economizer – This point indicates the specific fault detected and annunciated by the Economizer Operation alarm above. Detected fault conditions include: Failed to Fully Open, Failed to Open, Failed to Close, and Stuck Open.

SPACE RELATIVE HUMIDITY SENSOR

This alarm indicates the mA input at the associated channel falls below 3.5 mA or rises above 21 mA, or the Network value for space RH is no longer being received. Cooling, heating, and supply fan operation continues, however, the controller's Perfect Humidity binary output is disabled until the fault condition is corrected.

IAQ SENSOR

This alarm indicates the mA input at the associated channel falls below 3.5 mA or rises above 21 mA, or the Network value for

space RH is no longer being received. Cooling, heating, and supply fan operation continues. However, the controller's IAQ control function is disabled until the fault condition is corrected.

OAQ SENSOR

This alarm indicates the mA input at the associated channel falls below 3.5 mA or rises above 21 mA, or the Network value for space RH is no longer being received. Cooling, heating, and supply fan operation continues. However, the controller's IAQ control function uses 400ppm as the fixed outdoor air CO_2 level until the fault condition is corrected.

SPACE TEMPERATURE

When Occupied, a Space Temperature alarm is generated if the space temperature falls below the lower limit or rises above the upper limit.

When Unoccupied, an unoccupied space temperature alarm is generated when the space temperature falls below the alarm configuration Unoccupied Low SPT Alarm Limit or when the space temperature rises above the alarm configuration Unoccupied High SPT Alarm Limit.

The following values are related to the Space Temperature alarm:

Alarming Temperature – This variable displays the value of the space temperature that caused the alarm and is only visible when the space temperature is in an alarm state.

Alarm Limit Exceeded – This variable displays the value of the alarm setpoint that was exceeded by the alarming space temperature and is only visible when the space temperature is in an alarm state.

SUPPLY AIR TEMPERATURE

This alarm indicates the supply air temperature fell below the alarm configuration Low SAT Alarm Limit or exceeded the alarm configuration High SAT Alarm Limit for 5 minutes. This alarm is inhibited until the RTU has been running for 30 minutes to allow for system stabilization after startup.

SETPOINT SLIDER

This alarm indicates an open circuit is detected at the setpoint adjustment input. This can only occur if the Space Sensor Type is set to T56. Note that only an open circuit results in an alarm. A short across this input offsets the setpoints negatively by the amount configured by configuration Setpoint Adjustment Range.

SWITCH CONFIGURATION

This occurs if more than one binary input (inputs 3, 5, 8, and 9) is configured for the same function. When this happens the two inputs (or more) configured wrong will be disabled as an inputs. This alarm will automatically be cleared when configuration is corrected.

An example of this would be: Input 3 = Compressor Safety, input 5 = Fan Status, input 8 = Fan Status, and input 9 = Humidistat; the alarm would be active, unit would run, compressor safety and humidistat would function normally, and Fan Status (inputs 5 and 8) will be interpreted as “No Function.”

ANALOG INPUT CONFIGURATION

This occurs if more than one analog input (inputs 1 and 2) is configured for the same sensor. When this happens the two inputs will be disabled as inputs. This alarm will automatically be cleared when configuration is corrected.

An example of this would be: Input 1 = IAQ Sensor, input 2 = IAQ Sensor; the alarm would be active, unit would run, but the IAQ Sensor (inputs 1 and 2) will be interpreted as “No Function.”

SPACE RELATIVE HUMIDITY

This alarm indicates the space humidity fell below the alarm configuration Low Space Humidity Alarm Limit or exceeded the alarm configuration High Space Humidity Alarm Limit for 10 minutes. This alarm is inhibited until the RTU runs for 15 minutes to allow for system stabilization after startup.

INDOOR AIR QUALITY

This alarm indicates the space CO_2 level exceeds the alarm configuration Occupied High CO_2 Alarm Limit for 1-minute. This alarm will be inhibited until the RTU has been running for 2-minutes to allow for system stabilization after startup.

SUPPLY FAN RUNTIME

This alarm indicates the accumulated runtime exceeds the unit configuration Supply Fan Service Alarm Timer value (when not set to 0). This alarm is most commonly used to indicate an equipment maintenance interval is due. The supply fan runtime accumulator may be reset by setting the maintenance point Reset Supply Fan Runtime Alarm to Clear, and then back to Run – acknowledging each selection by clicking the OK button when it appears. Setting unit configuration Supply Fan Service Timer value to 0 disables the supply fan runtime alarm function.

COMPRESSOR 1 RUNTIME

This alarm indicates the accumulated runtime exceeds the unit configuration Compressor 1 Service Alarm Timer value (when not set to 0). This alarm is most commonly used to indicate an equipment maintenance interval is due. The Compressor 1 Runtime accumulator may be reset by setting the maintenance point Reset Comp 1 Runtime Alarm to Clear, and then back to Run – acknowledging each selection by clicking the OK button when it appears. Setting unit configuration Compressor 1 Service Timer value to 0 disables the Compressor 1 Runtime alarm function.

COMPRESSOR 2 RUNTIME

This alarm indicates the accumulated runtime exceeds the unit configuration Compressor 2 Service Alarm Timer value (when not set to 0). This alarm is most commonly used to indicate an equipment maintenance interval is due. The Compressor 2 runtime accumulator may be reset by setting the maintenance point Reset Comp 2 Runtime Alarm to Clear, and then back to Run – acknowledging each selection by clicking the OK button when it appears. Setting unit configuration Compressor 2 Service Timer value to 0 disables the Compressor 2 runtime alarm function. Note that this function is unavailable if the service configuration Compressor Stages value is not set to Two Stages.

FILTER

This alarm indicates the accumulated runtime exceeds the unit configuration Filter Service Alarm Timer value (when not set to 0). This alarm is most commonly used to indicate a filter replacement is due. Reset the filter service runtime accumulator by setting the maintenance point Reset Filter Runtime Alarm to On, back to Off, and clicking the OK button after each setting. Setting unit configuration Filter Service Alarm Timer value to 0 disables the filter service alarm function.

Performance

CURRENT PERFORMANCE DATA

The RTU Open controller collects performance data during operation. The data can be used to monitor the operation of the unit over time.

EQUIPMENT RUNTIME

RTU Open controller monitors the supply fan and records the amount of time the unit has been operating. This value will continue to accumulate runtime until Performance Data has been changed to Reset or will also automatically reset every 24 hours at midnight if Save Performance Data Daily is set to Enable.

ECONOMIZER UTILIZATION

The amount of time the equipment has operated in the economizer mode as a percentage of the equipment runtime above. This value will continue to accumulate runtime until Performance Data has been changed to Reset or will automatically reset every 24 hours at midnight if Save Performance Data Daily is set to Enable.

DCV UTILIZATION

The amount of time the equipment has provided Demand Controlled Ventilation as a percentage of the equipment runtime above. This value will continue to accumulate runtime until Performance Data has been changed to Reset or will automatically reset every 24 hours at midnight if Save Performance Data Daily is set to Enable.

UNOCC FREE COOL UTILIZATION

The amount of time the equipment has provided Free Cooling while unoccupied as a percentage of the equipment runtime above. This value will continue to accumulate runtime until Performance Data has been changed to Reset or will automatically reset every 24 hours at midnight if Save Performance Data Daily is set to Enable.

PART LOAD COOLING UTILIZATION

The amount of time the equipment has operated in the cooling mode but at less than 100% full cooling capacity as a percentage of the equipment runtime above. This value will continue to accumulate runtime until Performance Data has been changed to Reset or will automatically reset every 24 hours at midnight if Save Performance Data Daily is set to Enable.

FULL LOAD COOLING UTILIZATION

The amount of time the equipment has operated in the cooling mode at 100% full cooling capacity as a percentage of the equipment runtime above. This value will continue to accumulate runtime until Performance Data has been changed to Reset or will automatically reset every 24 hours at midnight if Save Performance Data Daily is set to Enable.

HEATING UTILIZATION

The amount of time the equipment has operated in the heating mode as a percentage of the equipment runtime above. This value will continue to accumulate runtime until Performance Data has been changed to Reset or will automatically reset every 24 hours at midnight if Save Performance Data Daily is set to Enable.

RECORDED HIGH OAT

The highest value of OAT noted since the last reset occurred. This value will continue to update until Performance Data has been changed to Reset or will automatically reset every 24 hours at midnight if Save Performance Data Daily is set to Enable.

RECORDED LOW OAT

The lowest value of OAT noted since the last reset occurred. This value will continue to update until Performance Data has been changed to Reset or will automatically reset every 24 hours at midnight if Save Performance Data Daily is set to Enable.

PERFORMANCE DATA

Indicates the mode that is currently in effect. This point is used to reset all of the above performance data manually at any time.

Range = Collect/Reset

Default = Collect

HISTORICAL PERFORMANCE DATA

The RTU Open controller collects historical performance every time the performance data above has been reset.

SAVE PERFORMANCE DATA DAILY

If set to Enable, the control will automatically transfer the Current Performance Data directly to the Historical Performance Data values for each entry once every 24 hours at midnight. All Historical data will only be available for viewing for the next 24 hours. Also, all current performance data will be reset after the data has been transferred.

Range = Disable/Enable

Default = Enable

EQUIPMENT RUNTIME

The value of the equipment runtime when the current performance data was last reset.

ECONOMIZER UTILIZATION

The value of the Economizer Utilization when the current performance data was last reset.

DCV UTILIZATION

The value of the DCV Utilization when the current performance data was last reset.

UNOCC FREE COOL UTILIZATION

The value of the Unocc Free Cool Utilization when the current performance data was last reset.

PART LOAD COOLING UTILIZATION

The value of the Part Load Cooling Utilization when the current performance data was last reset.

FULL LOAD COOLING UTILIZATION

The value of the Full Load Cooling Utilization when the current performance data was last reset.

HEATING UTILIZATION

The value of the Heating Utilization when the current performance data was last reset.

PREVIOUS HIGH OAT

The value of the Recorded High OAT when the current performance data was last reset.

PREVIOUS LOW OAT

The value of the Recorded Low OAT when the current performance data was last reset.

Third Party Networking

Third party communication and networking troubleshooting should be done by or with assistance from the front end third party technician. A Module Status Report (Modstat) can be run from Field Assistant (see Table 5 to perform). This lists information about the board status and networking state. For basic troubleshooting, see Table 6.

For further information about third party networking contact Bryant applications engineering.

Table 5 — Manufacture Date

When troubleshooting, you may need to know the manufacture date of the control module.

Obtain the manufacture date from a...	Notes
Module status report (Modstat)	To obtain a modstat with Field Assistant: 1. Press Function (FN) key and hold. 2. Then press period (.) 3. Release both buttons. The report shows the date under **Main board hardware**.
Sticker on the control board “Serial No: OR2YMCxxxP” (Bar Code and Typed Number)	The serial numbers are unique and contain embedded information, for example OR2420042P: **“OR2”** — These first three digits are unique to RTU Open and are used as an identifier. **“YM”** — These two digits identify the last digit of the year and month (in hex, A=10/Oct) of manufacture. “92” would represent a date of manufacture of “Feb 2019”. **“C”** — Thousands counter 0-9 and A-Z; A = 10; Z = 35 **“xxx”** — These three digits represent the sequential number of units produced for a given product for the mentioned manufacturing time period. **“P”** — This final digit represents the decade and toggles between “N” and “M” every ten years.

Table 6 — Basic Protocol Troubleshooting

Problem	Possible cause	Corrective action
No communication with third party vendor	Incorrect settings on SW1, SW2 and SW3	Verify and correct switch settings. Cycle power to RTU Open after changing switch settings.
	RS485 Port has no voltage output (check with RTU Open disconnected from RS485 communication bus):	Verify RTU Open has correct power supply.
	• BACnet @ 9600/19.2K – 0.01 to 0.045vdc	Possible bad driver on board.
	• BACnet @ 38.4K – 0.06 to 0.09vdc • BACnet @ 76.8K – 0.1vdc • Modbus @ 9600 – 76.8K – 0.124vdc • N2 @ 9600 - 0.124vdc	Check RS485 bus for external voltage before reconnecting to the bus.
	Verify devices are daisy chained and repeaters and bias terminators are correctly installed.	Check third party vendor RS485 communication wiring guidelines and troubleshooting procedures.

APPENDIX A — USER INTERFACE MENUS

Field Assistant Navigation

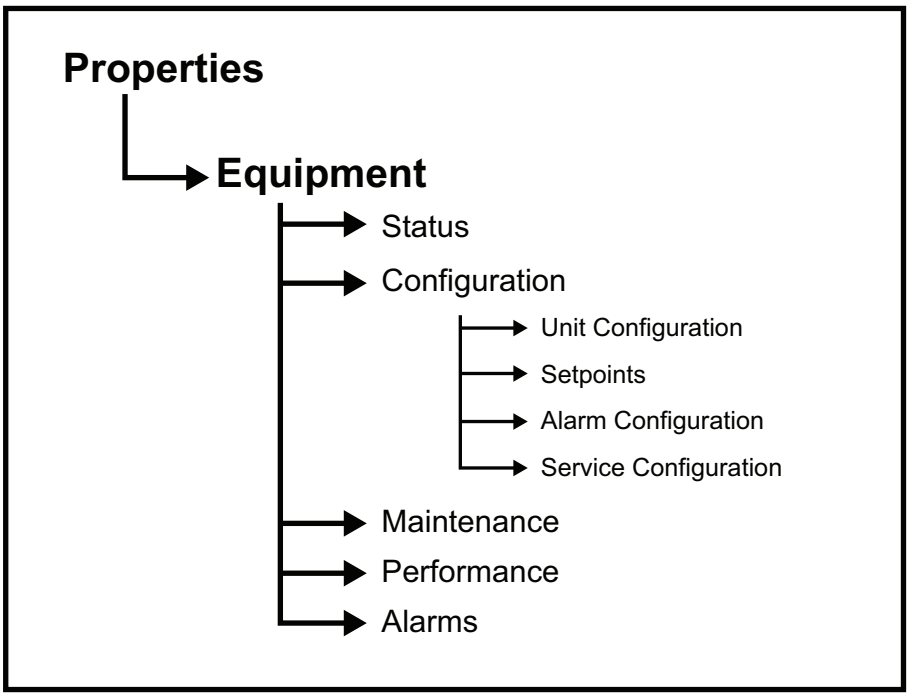

Fig. A — Field Assistant Navigation Chart

Table A — User Interface Menus

Field Assistant Menu	Access Level 3=ADMIN 2=USER 1=No PW	POINT NAME	BACnet Object	RANGE	DEFAULT
			STATUS		
Properties> Control Program> Status	3, 2, 1	Equipment Status	mode_status	1=Disable 2=Test 3=Run	
	3, 2, 1	SystmMode	run_status	1=Off 2=Fan Only 3=Economizer Cooling 4=Cooling 5=Heating 6=Dehumidification 7=Test 8=Shutdown 9=Unocc Free Cooling 10=Fire Shutdown 11=IAQ Override 12=Pre-occ Purge 13=IGC Override	
		Supply Fan Status*	sfan_status	Off/Running	
		Fan/Speed	fan_run	1=Off 2=Low 3=Med 4=High 5=On	
	3, 2, 1	Supply Fan VFD†	vfd_output	0-100%	
	3, 2, 1	Supply Fan VFD Voltage	vfd_volt_output	0-10v	
	3, 2, 1	Space Temperature - Prime Variable	space_temp	xxx °F	
	3, 2, 1	Supply Air Temperature	sa_temp	xxx °F	
	3, 2, 1	Outdoor Air Temperature	oa_temp	xxx °F	
	3, 2, 1	Space Relative Humidity	space_rh	0-100%	
	3, 2, 1	Indoor Air CO2	iaq	0-5000 ppm	
	3, 2, 1	Outdoor Air CO2	oaq	0-5000 ppm	
	3, 2, 1	Economizer Output	econ_output	0-100% open	
	3, 2, 1	Shutdown	shutdown	Inactive/Active	

Table A — User Interface Menus (cont)

Field Assistant Menu	Access Level 3=ADMIN 2=USER 1=No PW	POINT NAME	BACnet Object	RANGE	DEFAULT
		UNIT CONFIGURATION			
Properties> Control Program> Configuration> Unit Configuration	3	Fan Mode	fan_mode	1=Auto 2=Continuous 3=Always On	Continuous
	3	Power Fail Restart Delay	start_delay	0-30 sec	5
		Fan Off Delay	fan_delay_off	0-180 sec	90
	3	Minimum Cooling SAT	sat_cl_min	45-75°F	50
	3	Maximum Heating SAT	sat_ht_max	85-150°F	120
	N/A	Vent Dmpr Pos / DCV Min Pos	econ_min	0-100% Open	20
	N/A	Economizer Purge Min Pos	econ_purge_min	0-100% Open	40
	N/A	Low Fan Econ Min Pos**	econ_min_2	0-100% Open	33
	N/A	DCV Max Vent Damper Pos	iaq_dpr_max	0-75% Open	50
	3	Supply Fan Service Alarm Timer	sfan_service_hrs	0-9999 hr	600
	N/A	Comp 1 Service Alarm Timer	comp1_service_hrs	0-9999 hr	0
	N/A	Comp 2 Service Alarm Timer	comp2_service_hrs	0-9999 hr	0
	N/A	Door Alarm Delay	door_alarm_delay	0-180 sec	60
	3	Pushbutton Override	pb_enable	Disable/Enable	Enable
	3	Setpoint Adjustment	stpt_adj_enable	Disable/Enable	Enable
	3	Setpoint Adjustment Range	stpt_adj_range	+/-0-5°F	5
	3	Filter Service Alarm Timer	filter_service_hrs	0-9999 hr	600
	3	Cooling Lockout Temperature	oat_cl_lockout	0-80°F	45
	3	Economizer High OAT Lockout Temp	oat_ec_lockout	55-80°F	75
	N/A	HP Rev Cycle Lockout Temp††	hp_rev_cycle_lockout	-20-65°F	-3
	N/A	HP Aux Heat Lockout Temp††	oat_auxht_lockout	-20-65°F	40
	3	Heating Lockout Temperature	oat_ht_lockout	35-150°F	65
	N/A	Pre Occupancy Purge	preocc_purge	Disable/Enable	Disable
	3	Purge Time	purge_time	0-240 min	60 min
	3	Unocc Free Cool	ntfc_ena	Disable/Enable	Disable
	N/A	Min Setpoint Separation	min_stpt_sep	2-10°F	5
	N/A	Occupancy Source	occ_source	1=Always Occupied 2=BACnet Schedule 3=BAS on/off 4=Remote Occ Input	Always Occupied
		INPUT CONFIGURATION			
Properties> Control Program> Configuration> Unit Configuration> Input Configuration	3	Input 1 Function	ai1_function	1=No Sensor 2=IAO Sensor 3=OAQ Sensor 4=Space RH Sensor	IAQ Sensor
	3	Input 2 Function	ai2_function	1=No Sensor 2=IAO Sensor 3=OAQ Sensor 4=Space RH Sensor	No Sensor IAQ (FIOP CO_2 sensor)
	3	Input 3 Function	di3_function	1=No Function 2=Compressor Safety 3=Fan Status 4=Filter Status 5=Remote Occupancy 6=Door Contact	Compressor Safety
	N/A	Input 3 Switch Configuration	di3_type	N/O N/C	N/C

Table A — User Interface Menus (cont)

Field Assistant Menu	Access Level 3=ADMIN 2=USER 1=No PW	POINT NAME	BACnet Object	RANGE	DEFAULT
		INPUT CONFIGURATION (cont)			
Properties> Control Program> Configuration> Unit Configuration> Input Configuration	3	Input 5 Function	di5_function	1=No Function 2=Fire Shutdown 3=Fan Status 4=Filter Status 5=Remote Occupancy 6=Door Contact	Fire Shutdown
	3	Input 5 Switch Configuration	di5_type	N/O N/C	N/O
	3	Input 8 Function	di8_function	1=No Function 2=Enthalpy Switch 3=Fan Status 4=Filter Status 5=Remote Occupancy 6=Door Contact	Enthalpy Switch
	3	Input 8 Switch Configuration	di8_type	N/O N/C	N/O
	3	Input 9 Function	di9_function	1=No Function 2=Humidistat 3=Fan Status 4=Filter Status 5=Remote Occupancy 6=Door Contact 7=IGC Override	Humidistat
		Space sensor type	spt_type	1=T55 2=T56 (use for T59) 3=SPT Sensor 4=None 5=ZS Sensor	None
	3	Input 9 Switch Configuration	di9_type	N/O N/C	N/O
	N/A	ZS Sensor Binder	zs_binder	Rnet/Unused	Rnet
	N/A	ZS Zone Temp	zs_zone_temp	Zone Temp (1-5)	Main ZS Sensor
	N/A	ZS Zone Humidity	zs_zone_humidity	Zone Humidity (1-5)	Main ZS Sensor
	N/A	ZS Zone CO2	zs_zone_co2	Zone CO_2 (1-5)	Main ZS Sensor
		SENSOR CALIBRATION			
Properties> Control Program> Configuration> Unit Configuration> Sensor Calibration		Space Temperature	lcl_space_temp		
		Space Temp Calibration	spt_offset	-9.9 - 10°F	0
		Space RH	lcl_space_rh	0-100%	
		Space AQ	lcl_space_aq	0-5000ppm	
		Supply Air Temperature	lcl_sa_temp	-56 - 245°F	
		Supply Air Temp Calibration	sat_offset	-9.9 - 10°F	0
		Outdoor Air Temperature	lc_oa_temp	-56 - 245°F	
		Outdoor Air Temp Calibration	oat_offset	-9.9 - 10°F	0
		SETPOINT			
Properties> Control Program> Configuration> Setpoints	3	Occupied Heating Setpoint	occupied_heat_setpoint	40-90 °F	70
	3	Occupied Cooling Setpoint	occupied_cool_setpoint	55-99 °F	76
	3	Unoccupied Heating Setpoint	unoccupied_heat_setpoint	40-90 °F	55
	3	Unoccupied Cooling Setpoint	unoccupied_cool_setpoint	45-99 °F	90
	N/A	Effective Heat Setpoint	effective_heat_setpoint	0-120 °F	
	N/A	Effective Cool Setpoint	effective_cool_setpoint	0-120 °F	
	3	Optimal Start	optm_start	0-4 hr	1
	3	Optimal Start Type	start_type	1=None 2=Temp Compensated 3=Learning Adaptive	Temperature Compensated
	3	Heat Start K factor (min/deg)	h_kfactor	0-99	15
	3	Cool Start K factor (min/deg)	c_kfactor	0-99	15
	3	Occ Relative Humidity Setpoint	occ_dehum_stpt	0-unocc setpoint %rh	60
	3	Unocc Relative Humidity Setpoint	unocc_dehum_stpt	30-100 %rh	95
	3	DCV Max Ctrl Setpoint	iaq_stpt_max	0-9999 ppm	650
	3	Power Exhaust Setpoint***	pexh_stpt	20-90 %Open	50

Table A — User Interface Menus (cont)

Field Assistant Menu	Access Level 3=ADMIN 2=USER 1=No PW	POINT NAME	BACnet Object	RANGE	DEFAULT
SPACE TEMPERATURE ALARM					
Properties> Control Program> Configuration> Alarm Configuration> Space Temperature Alarm	3	Occupied Alarm Hysteresis	occ_spt_alrm_hyst	0-20°F	5
	N/A	Alarm Delay (min/deg)	spt_alrm_delay	0-60 min	10
	3	Unoccupied Low SPT Alarm Limit	uno_spt_alrm_lo_lmt	35-90 °F	45
	3	Unoccupied High SPT Alarm Limit	uno_spt_alrm_hi_lmt	45-100 °F	95
SUPPLY TEMPERATURE ALARM					
Properties> Control Program> Configuration> Alarm Configuration> Supply Temperature Alarm	3	Low SAT Alarm Limit	sat_lo_alrm_lim	15-90 °F	38
	3	High SAT Alarm Limit	sat_hi_alrm_lim	90-175 °F	160
SPACE HUMIDITY ALARM					
Properties> Control Program> Configuration> Alarm Configuration> Space Humidity Alarm	3	Occupied High RH Alarm Limit (%RH)	sprh_hi_alrm_lim	0-100%rh	70%rh
	3	Alarm Delay (min/%RH)	sprh_delay	0-30 min	5 min
	3	Unoccupied High RH Alarm Limit (%RH)	unocc_sprh_lmt	0-100%rh	100%rh
	N/A	Low RH Alarm Limit (%RH)	sprh_lo_alrm_lim	0-100%rh	30%rh
IAQ / VENTILATION ALARM					
Properties> Control Program> Configuration> Alarm Configuration> IAQ /Ventilation Alarm	3	Occupied High CO2 Alarm Limit (ppm)	iaq_occ_hi_lmt	0-9999 ppm	1200
SERVICE CONFIGURATION					
Properties> Control Program> Configuration> Service Configuration	3	Unit Type	unit_type	1=Heat/Cool 2=n/a 3=HP O/B Ctrl 4=HP Y1/W1 Ctrl	Heat/Cool (582J/559J, 580J/558J,581J/551J, 582K/559K, and 581K/ 551K models) HP Y1/W1 Cltl (547J,548J, 549J, 547K, and 549K models
	3	Compressor Stages	comp_stages	1=One Stage 2=Two Stages	One Stage (580J/558J and 581J/551J sizes 04-07, and A08-A12, 582J/559J and 582K/ 559K sizes 04-06,) Two Stages (580J/558J and 581J/551J sizes 08-30, 581K/551K sizes 04-06, 582K/559K size 07)
	3	Economizer Exists	econ_exists	No/Yes	No (No FIOP) Yes (FIOP)
	3	Fan Control	fan_type	1=Single Speed 2=Two Speed 3=Variable Speed	Single Speed (582J/ 559J, 580J/558J and 581J/551J sizes 04-07 and A08-12) Two Speed (580J/558J and 581J/551J 08-30) Variable (582K/559K and 581K/551K sizes 04-07)
	N/A	VFD Input	vfd_in_type	0-10Vdc/2-10Vdc	0-10Dcv (582/559K and 581/551K sizes 04-07)
	N/A	Show VFD Config as	vfd_spd_cfg	Percentage/Voltage	Voltage (582/559K and 581/551K sizes 04-07)
	N/A	IDF Max Speed Voltage	max_spd_volt	0-10Vdc	10Vdc
	N/A	IDF Min Speed Voltage	min_spd_volt	0-10Vdc	5.2Vdc
	N/A	IDF Heat Speed Voltage	ht_spd_volt	0-10Vdc	5.2Vdc
	N/A	Max VFD Output	max_vfd_spd	33-100%	100%
	N/A	Min VFD Output	min_vfd_spd	33-100%	40%
		Heating VFD Output	heat_vfd_spd	20-100%	100%
		Stage 1 SAT Stpt	stg_1_sat	45-75°F	57°F

Table A — User Interface Menus (cont)

Field Assistant Menu	Access Level 3=ADMIN 2=USER 1=No PW	POINT NAME	BACnet Object	RANGE	DEFAULT
		SERVICE CONFIGURATION (cont)			
Properties> Control Program> Configuration> Service Configuration		Stage 2 SAT Stpt	stg_2_sat	45-75°F	55°F (582/559K and 581/551K sizes 04-07)
		Stage 3 SAT Stpt	stg_3_sat	45-75°F	56°F
	3	Reversing Valve Output†††	rev_vlv_type	O output type/ B output type	O output type
	3	Heat Type	heat_type	Electric/Gas	Gas (580J/581J/582J, 582K/551K series units) Electric (558J/551J/559J/559K/551K and 548J/549J/547J/547K/549K series units)
	3	Number of Heat Stages	heat_stages	1=1 stage 2=2 stages 3=0 stage	0 (558J/551J/559J/559K/551K series electric no heat units) 1 (All Heatpumps, Low NOx units, single phase gas units) 1 (582J/580J 04-09 low and 05-07 med heat 3 phase gas units) 1 (551K 04-06 low heat) 1 (551K 04-05 med heat) 1 (551K 04 high heat 230v 3 phase or 460v) 1 (551K 06 med heat 460v or 575v) 1 (551K 05 high heat 460v) 1 (582K 04-07 low heat) 1 (582K 05-07 med heat) 2 (582J/559J, 580J/558J 04 and 08-09 med) 2 (582J/559J, 580J/558J 05-09 high heat 3 phase gas units) 2 (581J 04-09 3 phase gas units) 2 (580J/581J 12-20 size) 2 (551K 04-06 high heat 230v 1 phase or 575v) 2 (551K 06 med heat 230v 3 phase) 2 (551K 05 high heat 230v 3 phase) 2 (551K 06 high heat) 2 (581K 04-06 230v 3 phase, 460v, or 575v) 2 (582K 05-07 high heat 230v 3 phase, 460v, or 575v) 2 (582K 04 med heat 230v 3 phase, 460v, or 575v)
		SA Tempering	sa_tempering_en	Disable/Enable	Disable
	N/A	Continuous Occupied Exhaust	occ_exh	No/Yes	No
	3	RH Control	rh-enable	Disable/Enable	Enable (Units with Perfect Humidity FIOP) Disable (Units w/o Perfect Humidity FIOP)
	3	DCV Control	dcv_enable	Disable/Enable	Disable
	N/A	Indoor CO2 Sensor Value @ Min mA	iaq_ref_lo_ppm	0-9999ppm	0
	N/A	Indoor CO2 Sensor Value @ Max mA	iaq_ref_hi_ppm	0-9999ppm	2000

Table A — User Interface Menus (cont)

Field Assistant Menu	Access Level 3=ADMIN 2=USER 1=No PW	POINT NAME	BACnet Object	RANGE	DEFAULT
		SERVICE CONFIGURATION (cont)			
Properties> Control Program> Configuration> Service Configuration	N/A	Outdoor CO2 Sensor Value @ Min mA	oaq_ref_lo_ppm	0-9999ppm	0
	N/A	Outdoor CO2 Sensor Value @ Max mA	oaq_ref_hi_ppm	0-9999ppm	2000
	N/A	System Space Temperature	system_spt		
	N/A	System Space RH	system_rh		
	N/A	System Space AQ	system_iaq		
	N/A	System Outdoor AQ	system_oaq		
	N/A	System Cool Demand Level	cool_demand_level	0-3	0
	N/A	System Heat Demand Level	heat_demand_level	0-3	0
	N/A	System Outdoor Air Temperature	system_oat		
		System Fire/Smoke		off/on	off
		SERVICE TEST			
Properties> Control Program> Configuration> Service Configuration> Service Test		Service Test	test_enable	Disable/Enable	Disable
		Fan Test	fan_test	Disable/Enable	Disable
		High Speed Fan Test	hi_spd_test	Disable/Enable	Disable
		Compressor 1 Test	comp1_test	Disable/Enable	Disable
		Compressor 2 Test	comp2_test	Disable/Enable	Disable
		Heat 1 Test	heat1_test	Disable/Enable	Disable
		Heat 2 Test	heat2_test	Disable/Enable	Disable
		Reversing Valve Test	rev_vlv_test	Disable/Enable	Disable
		Dehumidification Test	dehum_test	Disable/Enable	Disable
		Power Exhaust Test	pexh_test	Disable/Enable	Disable
		Economizer Test	econ_test	0-100% Open	0
		VFD Speed Test	vfd_spd_test	0-100% or 0-10vdc	0
		UNIT MAINTENANCE			
Properties> Control Program Maintenance> Unit	3	Occupancy Status	occ_status	Occupied/Unoccupied	
	N/A	Temp Compensated Start -Or- Learning Adaptive Start	tcs_status -Or- aos_status	Inactive/Active	
	3	Pre Occupancy Purge	purge	Inactive/Active	
	N/A	Space Temp Sensor	spt_status	1=Sensor Failure 2=SPT Sensor 3=T55/T56 4=Network 5=Airside Linkage 6=Locked Value	
	3	Setpoint Adjustment	stpt_adj	xx°F	
	3	Effective Heat Setpoint	effective_ht_stpt	0-120°F	
	3	Effective Cool Setpoint	effective_ci_stpt	0-120°F	
	N/A	Relative Humidity Source	rh_source	1=N/A 2=Local 3=Network 4=Linkage 5=Locked Value 6=Linkage&Local	
	N/A	IAQ Source	iaq_source	1=N/A 2=Local 3=Network 4=Linkage 5=Locked Value 6=Linkage&Local	
	N/A	OAQ Source	oaq_source	1=N/A 2=Local 3=Network 4=Linkage 5=Locked Value 6=Linkage&Local	

Table A — User Interface Menus (cont)

Field Assistant Menu	Access Level 3=ADMIN 2=USER 1=No PW	POINT NAME	BACnet Object	RANGE	DEFAULT
		UNIT MAINTENANCE (cont)			
Properties> Control Program Maintenance> Unit	N/A	Outdoor Air Temperature Source	oat_status	1=N/A 2=Local 3=Network 4=Linkage 5=Locked Value	
	N/A	System Status			
	N/A	Safety Chain Feedback	safety_status	Off/Run Enabled	
	N/A	Fire Shutdown Status	firedown_status	Run Enabled/Shutdown	
	N/A	Compressor Safety Status	comp_status	Normal/Trouble	
	N/A	Calculated Min Econ Pos	cal_min_econ_pos	0-100%	
	N/A	Calculated PE Setpoint	cal_pe_stpt	0-100%	
	3	Active Compressor Stages	comp_run	0-2	
	3	Active Heat Stages	heat_run	0-2	
	3	Fan Control	fan_type	Single Speed / Two Speed / Variable Speed	
	3	IGC Override	igcovr_status	Off/Active	
	N/A	Enthalpy Status	enthalpy_status	High/Low	
	N/A	Enthalpy BACnet	oae	High/Low	
	N/A	Humidistat Input Status	humstat_status	High/Low	
	N/A	Filter Status	filter_status	Clean/Dirty	
	N/A	Door Contact Status	door_contact_status	Off/On	
	3	Reset Supply Fan Runtime Alarm	sfan_rntm_clr	Run/Clear	Run
	N/A	Reset Comp 1 Runtime Alarm	comp1_rntm_clr	Run/Clear	Run
	N/A	Reset Comp 2 Runtime Alarm	comp2_rntm_clr	Run/Clear	Run
	3	Reset Filter Runtime Alarm	filter_rntm_clr	Off/On	Off
		OCCUPANCY (MAINTENANCE)			
Properties> Control Program Maintenance> Occupancy	3	BAS On / Off	keypad_ovrde	1=Inactive 2=Occupied 3=Unoccupied	Inactive
	3	Pushbutton Override	pb_status	Off/Active	
	N/A	Occupancy Contact	occ_contact_status	Off/On	
	3	Override Time Remaining	ovrde_time	0-240 min	
	3	Schedules	schedule	Unoccupied/Occupied	
		RUNTIME (MAINTENANCE)			
Properties> Control Program Maintenance> Runtime		Supply Fan Runtime	sfan_rntm	xxxxx hr	
		Compressor 1 Runtime	comp1_rntm	xxxxx hr	
		Compressor 2 Runtime	comp2_rntm	xxxxx hr	
		Filter Runtime	filter_rntm	xxxxx hr	
		CURRENT PERFORMANCE DATA			
Properties> Control Program> Performance> Current Performance Data	3, 2, 1	Equipment Runtime	equip_rntm	xxxxx hr	
	3, 2, 1	Economizer Utilization	econ_util	0-100%	
	3, 2, 1	DCV Utilization	dcy_util	0-100%	
	3, 2, 1	Unocc Free Cool Utilization	ntfc_util	0-100%	
	3, 2, 1	Part Load Cooling Utilization	partload_cool_util	0-100%	
	3, 2, 1	Full Load Cooling Utilization	cool_util	0-100%	
		CURRENT PERFORMANCE DATA			
Properties> Control Program> Performance> Current Performance Data	3, 2, 1	Heating Utilization	heat_util	0-100%	
	3, 2, 1	Recorded High OAT	rec_hi_oat	-xxx - xxx°F	
	3, 2, 1	Recorded Low OAT	rec_lo_oat	-xxx - xxx°F	
	N/A	Performance Data		Collect/Reset	
		Save Performance Daily	save_perf_data	Disable/Enable	Disable
		Equipment Runtime	pre_equip_rntm	xxxxx.x hr	
		Economizer Utilization	pre_econ_uti	0-100%	
		DCV Utilization	pre_dcv_util	0-100%	

Table A — User Interface Menus (cont)

Field Assistant Menu	Access Level 3=ADMIN 2=USER 1=No PW	POINT NAME	BACnet Object	RANGE	DEFAULT
		HISTORICAL PERFORMANCE DATA			
Properties> Control Program> Performance> Historical Performance Data		Unocc Free Cool Utilization	pre_ntfc_util	0-100%	
		Part Load Cooling Utilization	pre_pl_cool_util	0-100%	
		Full Load Cooling Utilization	pre_cool_util	0-100%	
		Heating Utilization	pre_heat_util	0-100%	
		Recorded High OAT	pre_hi_oat	-xxx – xxx°F	
		Recorded Low OAT	pre_lo_oat	-xxx – xxx°F	
		ALARMS			
Properties> Control Program> Alarms	3, 2, 1	Safety Chain	safety_alarm	Normal/Alarm	
	3, 2, 1	Fire/Smoke Shutdown	fire_alarm	Normal/Alarm	
	3, 2, 1	Gas Valve	igc_alarm	Normal/Alarm	
	3, 2, 1	Compressor Status	comp_alarm	Normal/Alarm	
	3, 2, 1	Space Temperature Alarm Status	spt_alrm_status	Normal/Alarm	
	N/A	Alarming Temperature		Sensor Range	
	N/A	Alarm Limit Exceeded		The Configured Limit	
	3, 2, 1	SPT Sensor	spt_sensor_fail	Normal/Alarm	
	3, 2, 1	Space Temp Sensor	spt_fail	Normal/Alarm	
	3, 2, 1	Wireless Batter Strength Alarm		Normal/Alarm	
	3, 2, 1	Wireless Signal Strength Alarm		Normal/Alarm	
	3, 2, 1	Supply Air Temperature	sat_alarm	Normal/Alarm	
	3, 2, 1	Supply Air Temp Sensor	loc_sat_sensor_fail	Normal/Alarm	
	N/A	Supply Fan Failure	sfan_fail_alarm	Normal/Alarm	
	3, 2, 1	Supply Fan in Hand	sfan_hand_alarm	Normal/Alarm	
	3, 2, 1	Indoor Air Quality	iaq_alarm	Normal/Alarm	
	3, 2, 1	Indoor Air Quality Sensor	iaq_sensor_alarm	Normal/Alarm	
	3, 2, 1	Space Relative Humidity	sprh_hi_alarm	Normal/Alarm	
	3, 2, 1	Space Relative Humidity Sensor	sprh_sensor_fail	Normal/Alarm	
	3, 2, 1	Filter	filter_alarm	Clean/Dirty	
	3, 2, 1	Local OAT Sensor	loc_oat_sensor_fail	Normal/Alarm	
	3, 2, 1	Outdoor Air Temp Sensor	oat_fail	Normal/Alarm	
	3, 2, 1	Economizer Operation	econ_opr	Normal/Alarm	
	3, 2, 1	Economizer		Normal Failed to Fully Open Failed to Open Failed to Close Stuck Open	
	3, 2, 1	Outdoor Air Quality Sensor	oaq_fail	Normal/Alarm	
	3, 2, 1	Setpoint Slider	slidepot_alarm	Normal/Alarm	
	3, 2, 1	Switch Configuration	di_cfg_alarm	Normal/Alarm	
	3, 2, 1	Analog Input Configuration	ai_cfg_alarm	Normal/Alarm	
	3, 2, 1	Supply Fan Runtime	sfan_rntm_alarm	Normal/Alarm	
	3, 2, 1	Compressor 1 Runtime	comp1_rntm_alarm	Normal/Alarm	
	3, 2, 1	Compressor 2 Runtime	comp2_rntm_alarm	Normal/Alarm	
	3, 2, 1	Airside Linkage Alarm	air_linkage_fail	Normal/Alarm	

* This point is only visible when Input 3, 5, 8, or 9 is configured for Fan Status
† This point is only visible when Fan Control is configured for Variable Speed
** This point is only visible when Fan Control is configured for Two Speed
†† This point is only visible when Unit Type is configured for HP O/B Ctrl or HP Y1/W1 Ctr
*** This point is hidden from view when Continuous Occupied Exhaust is enabled
†††This point is visible when Unit Type is configured for HP O/B Ctrl

APPENDIX B — NETWORK POINTS FOR RTU OPEN

Table B — Network Points List for BACnet and Modbus

Point Name	Point Access	Units	Default Value	BACnet Info		Modbus Info	
				BACnet Point Name	BACnet Object ID	Modbus Register Type	Modbus Register #
SA Vent / Temper Setpoint	R/W	°F	65	tempering_stpt	AV:3032	Holding Register (Float)	174
VFD Speed Config	R/W	%/V	%	vfd_spd_cfg	AV:1030		
Heating VFD Output	R/W	%	100	heat_vfd_spd	AV:3033		
Voltage Used to Set IDF VFD Heat Speed	R/W	V	4.4	ht_spd_volt	AV:83010		
Voltage Used to Set IDF VFD Maximum Speed	R/W	V	10	max_spd_volt	AV:83011		
Voltage Used to Set IDF VFD Minimum Speed	R/W	V	5.2	min_spd_volt	AV:83012		
Tempering Enable	R/W		Disable	sa_tempering_en	AV:83016		
VFD Speed Test	R/W	V	0	vfd_spdv_test	AV:81003		
Supply Fan VFD Voltage	R	V		vfd_volt_output	AV:2032		
VFD Analog Input Channel Type	R/W	Vdc	2 to 10	vfd_in_type	AV:91010		
Active Heat Stages	R			heat_run	AV:2003	Input Register (Float)	33
Effective Cool Setpoint	R	°F		eff_cl_stpt	AV:3005	Input Register (Float)	55
High Space Temperature	R	0=Normal 1=Alarm		spt_hi_alarm	BV:7011	Discrete Input	35
Low Space Temperature	R	0=Normal 1=Alarm		spt_lo_alarm	BV:7012	Discrete Input	39
Input_6	R	°F		ai_6	AI:1006		
Supply Fan Relay State	R	0=Off 1=On		sfan	BV:2001	Discrete Input	23
Supply Fan Status	R	0=Off 1=On		sfan_status	BV:1003	Discrete Input	24
Economizer Output	R	%Open		econ_output	AV:2022	Input Register (Float)	51
Outdoor Air Quality Sensor	R	0=Normal 1=Alarm		oaq_fail	BV:7006	Discrete Input	41
DCV Max Vent Damper Pos	R/W	%Open	50	iaq_dpr_max	AV:9011	Holding Register (Float)	47
Space Temperature - Prime Variable	R	°F		space_temp	AV:2007	Input Register (Float)	107
HP Rev Cycle Lockout Temp	R/W	°F	-3	hp_rev_cycle_lockout	AV:9004	Holding Register (Float)	71
System Outdoor Air Temperature	R/W	°F	-999	system_oat	AV:1901	Holding Register (Float)	119
Economizer Purge Min Pos	R/W	%Open	40	econ_purge_min	AV:9029	Holding Register (Float)	75
Active Compressor Stages	R			comp_run	AV:2020	Input Register (Float)	31
System Mode	R	1=Off 2=Fan Only 3=Economizer Cooling 4=Cooling 5=Heating6=Dehumidification 7=Test 8=Shutdown 9=Unocc Free Cooling 10=Fire Shutdown 11=IAQ Override 12=Pre-occ Purge 13=IGC Override		run_status	MSV:2002	Input Register (Signed)	1
Supply Air Temperature	R	°F		sa_temp	AV:1008	Input Register (Float)	109
DCV Max Ctrl Setpoint	R/W	ppm	650	iaq_stpt_max	AV:3013	Holding Register (Float)	45
Occ Relative Humidity Setpoint	R/W	%rh	60	occ_dehum_stpt	AV:3011	Holding Register (Float)	83
Occupancy Status	R	0=Unoccupied 1=Occupied		occ_status	BV:2008	Discrete Input	18
Optimal Start Type	R/W	1=None 2=Temp Compensated 3=Learning Adaptive	2	start_type	MSV:2009	Holding Register (Signed)	154
Setpoint	R/W	°F		unocc_ht_stpt	AV:3004	Holding Register (Float)	17
Economizer Test	R/W	%Open	0	econ_test	AV:81001		

Table B — Network Points List for BACnet and Modbus (cont)

Point Name	Point Access	Units	Default Value	BACnet Info		Modbus Info	
				BACnet Point Name	BACnet Object ID	Modbus Register Type	Modbus Register #
Space Relative Humidity Sensor	R	0=Normal 1=Alarm		sprh_sensor_fail	BV:7022	Discrete Input	45
Setpoint Adjustment	R	°F		stpt_adj	AV:1006	Input Register (Float)	99
Effective Heat Setpoint	R	°F		eff_ht_stpt	AV:3006	Input Register (Float)	57
Low Fan Econ Min Pos	R/W	%Open	33	econ_min_2	AV:9030	Holding Register (Float)	89
Fire / Smoke Shutdown	R	0=Normal 1=Alarm		fire_alarm	BV:7007	Discrete Input	32
Reset Filter Alarm	R/W	0=Off 1=On	Inactive (0)	filter_rntm_clr	BV:7517	Coil	22
Setpoint	R/W	°F		unocc_cl_stpt	AV:3003	Holding Register (Float)	15
ZS Sensor Configuration	R	0=Normal 1=Alarm		zs_config_fail	BV:7055	Discrete Input	63
Space Relative Humidity	R	%rh		space_rh	AV:1011	Input Register (Float)	103
Outdoor Air Temperature	R	°F		oa_temp	AV:1003	Input Register (Float)	87
Cooling Lockout	R/W	°F	45	oat_cl_lockout	AV:9002	Holding Register	43
Temperature						(Float)	
Power Exhaust Setpoint	R/W	%Open	50	pexh_stpt	AV:3010	Holding Register (Float)	97
BAS On / Off	R/W	1=Inactive 2=Occupied 3=Unoccupied	1	keypad_ovrde	MSV:1001	Holding Register (Signed)	133
System Space AQ	R/W	ppm	-999	system_iaq	AV:1903	Holding Register (Float)	149
System Space RH	R/W	%	-999	system_rh	AV:1904	Holding Register (Float)	151
Compressor Status	R	0=Normal 1=Alarm		comp_alarm	BV:7013	Discrete Input	30
Filter Service Alarm Timer	R/W	hr	600	filter_service_hrs	AV:2019	Holding Register (Float)	67
Indoor Air Quality Sensor	R	0=Normal 1=Alarm		iaq_sensor_fail	BV:7039	Discrete Input	37
Heating Lockout Temperature	R/W	°F	65	oat_ht_lockout	AV:9003	Holding Register (Float)	69
Dehumidification	R	0=Inactive 1=Active		dehum	BV:2006	Discrete Input	9
Reversing Valve Relay State	R	0=Off 1=On		aux_1	BV:2007	Discrete Input	20
Password Protected Output Variable	R/W		0	ppo	AV:90000		
Vent Dmpr Pos / DCV Min Pos	R/W	%Open	20	econ_min	AV:9005	Holding Register (Float)	131
Filter	R	0=Clean 1=Dirty		filter_alarm	BV:7017	Discrete Input	31
Safety Chain	R	0=Normal 1=Alarm		safety_alarm	BV:7024	Discrete Input	43
Unocc Relative Humidity Setpoint	R/W	%rh	95	unocc_dehum_stpt	AV:3012	Holding Register (Float)	129
Setpoint	R/W	°F		occ_ht_stpt	AV:3002	Holding Register (Float)	19
Supply Air Temp Sensor	R	0=Normal 1=Alarm		loc_sat_sensor_fail	BV:7020	Discrete Input	51
Override Time Remaining	R	min		ovrde_time	AV:2016	Input Register (Float)	93
Setpoint Adjustment	R/W	0=Disable 1=Enable	Active (1)	stpt_adj_enable	BV:1013	Coil	26
System Space Temperature	R/W	°F	-999	system_spt	AV:1902	Holding Register (Float)	123
Space Temperature Offset Pot	R	°F		stpt_adj_offset	AV:91006		
System Outdoor AQ	R/W	ppm	-999	system_oaq	AV:1908	Holding Register (Float)	155
Outdoor Air Temp Sensor	R	0=Normal 1=Alarm		oat_fail	BV:7029	Discrete Input	27
SPT Sensor	R	0=Normal 1=Alarm		spt_sensor_fail	BV:7032	Discrete Input	38

Table B — Network Points List for BACnet and Modbus (cont)

Point Name	Point Access	Units	Default Value	BACnet Info		Modbus Info	
				BACnet Point Name	BACnet Object ID	Modbus Register Type	Modbus Register #
Fan / Speed	R	1=Off 2=Low 3=Med 4=High 5=On		fan_run	MSV:2004	Input Register (Signed)	175
Setpoint Adjustment Range	R/W	°^F	5	stpt_adj_range	AV:9015	Holding Register (Float)	101
Enthalpy (BACnet)	R/W	0=High 1=Low	Active (1)	oae	BV:1901	Coil	6
Optimal Start	R/W	hr	1	optm_start	AV:9026	Holding Register (Float)	147
System Cooling Demand Level	R			cool_demand_level	AV:9006		
System Heating Demand Level	R			heat_demand_level	AV:9036		
System OAT Master	R	°F		mstr_oa_temp	AV:80001		
T5x Override Duration	R/W	hr	1	ovr_dur	AV:9023		
VFD Speed Test	R/W	%	0	vfd_spd_test	AV:81002		
input_3	R	0=Off 1=On		di_3	BI:1003		
input_4	R	0=Off 1=On		di_4	BI:1004		
input_5	R	0=Off 1=On		di_5	BI:1005		
input_8	R	0=Off 1=On		di_8	BI:1008		
input_9	R	0=Off 1=On		di_9	BI:1009		
Airside Linkage	R	0=Normal 1=Alarm		air_linkage_fail	BV:7030		
Analog Input Configuration	R	0=Normal 1=Alarm		ai_cfg_alarm	BV:7026		
Compressor 1 Runtime	R	0=Normal 1=Alarm		comp1_rntm_alarm	BV:7014		
Compressor 1 Relay State	R	0=Off 1=On		comp_1	BV:2005		
Compressor 1 Test	R/W	0=Disable 1=Enable	Inactive (0)	comp1_test	BV:81005		
Compressor 2 Relay State	R	0=Off 1=On		comp_2	BV:2004		
Compressor 2 Runtime	R	0=Normal 1=Alarm		comp2_rntm_alarm	BV:7015		
Compressor 2 Test	R/W	0=Disable 1=Enable	Inactive (0)	comp2_test	BV:81004		
Compressor Safety Status	R	0=Normal 1=Trouble		comp_status	BV:1008		
Continuous Occupied Exhaust	R/W	0=No 1=Yes	Inactive (0)	occ_exh	BV:9002		
DCV Control	R/W		Inactive (0)	dcv_enable	BV:1027		
Dehumidification Test	R/W	0=Disable 1=Enable	Inactive (0)	dehum_test	BV:81006		
Door Contact Status	R	0=Off 1=On		door_contact_status	BV:1010		
Economizer Exists	R/W	0=No 1=Yes	Inactive (0)	econ_exist	BV:99001		
Enthalpy Status	R	0=High 1=Low		enthalpy_status	BV:1002		
Factory Test	R/W	0=Off 1=On	Inactive	fac_test_enable	BV:91000		
Factory Test Relay 1 Control	R/W	0=Off 1=On	Inactive (0)	relay1_fac_test	BV:91001		
Factory Test Relay 2 Control	R/W	0=Off 1=On	Inactive (0)	relay2_fac_test	BV:91002		
Factory Test Relay 3 Control	R/W	0=Off 1=On	Inactive (0)	relay3_fac_test	BV:91003		
Factory Test Relay 4 Control	R/W	0=Off 1=On	Inactive (0)	relay4_fac_test	BV:91004		
Factory Test Relay 5 Control	R/W	0=Off 1=On	Inactive (0)	relay5_fac_test	BV:91005		
Factory Test Relay 6 Control	R/W	0=Off 1=On	Inactive (0)	relay6_fac_test	BV:91006		

Table B — Network Points List for BACnet and Modbus (cont)

Point Name	Point Access	Units	Default Value	BACnet Info		Modbus Info	
				BACnet Point Name	BACnet Object ID	Modbus Register Type	Modbus Register #
Factory Test Relay 7 Control	R/W	0=Off 1=On	Inactive (0)	relay7_fac_test	BV:91007		
Factory Test Relay 8 Control	R/W	0=Off 1=On	Inactive (0)	relay8_fac_test	BV:91008		
Filter Status	R	0=Clean 1=Dirty		filter_status	BV:1004		
Fire Shutdown Status	R	0=Run Enabled 1=Shutdown		firedown_status	BV:1005		
Heat 1Test	R/W	0=Disable 1=Enable	Inactive (0)	heat1_test	BV:81003		
Heat 2Test	R/W	0=Disable 1=Enable	Inactive (0)	heat2_test	BV:81002		
Heat Stage 1 Relay State	R	0=Off 1=On		heat_1	BV:2003		
Heat Stage 2 Relay State	R	0=Off 1=On		heat_2	BV:2002		
Heat Type	R/W	0=Electric 1=Gas	Inactive (0)	heat_type	BV:99002		
High Speed Fan Test	R/W	0=Disable 1=Enable	Inactive (0)	hi_spd_test	BV:81010		
Humidistat Input Status	R	0=High 1=Low		humstat_status	BV:1006		
IGC Override	R	0=Off 1=Active		igcovr_status	BV:1022		
Local OAT Sensor	R	0=Normal 1=Alarm		loc_oat_sensor_fail	BV:7003		
Occupancy Contact	R	0=Off 1=On		occ_contact_status	BV:1007		
Power Exhaust Relay State	R	0=Off 1=On		pexh	BV:2010		
Power Exhaust Test	R/W	0=Disable 1=Enable	Inactive (0)	pexh_test	BV:81008		
Reset Comp 1 Runtime Alarm	R/W	0=Run 1=Clear	Inactive (0)	comp1_rntm_clr	BV:7514		
Reset Comp 2 Runtime Alarm	R/W	0=Run 1=Clear	Inactive (0)	comp2_rntm_clr	BV:7515		
Reset Supply Fan Runtime Alarm	R/W	0=Run 1=Clear	Inactive (0)	sfan_rntm_clr	BV:7510		
Reversing Valve Output	R/W		Inactive (0)	rev_vlv_type	BV:1026		
RH Control	R/W		Inactive (0)	rh_enable	BV:1025		
Safety Chain Feedback	R	0=Off 1=On		safety_status	BV:1009		
Schedule	R/W	0=Unoccupied 1=Occupied	0	schedule	BV:8000		
Service Test	R/W	0=Disable 1=Enable	Inactive (0)	test_enable	BV:81000		
Setpoint Slider	R	0=Normal 1=Alarm		slidepot_alarm	BV:7002		
Shutdown	R/W	0=Inactive 1=Active	Inactive (0)	shutdown	BV:9001		
Supply Fan Failure	R	0=Normal 1=Alarm		sfan_fail_alarm	BV:7008		
Supply Fan in Hand	R	0=Normal 1=Alarm		sfan_hand_alarm	BV:7009		
Supply Fan Runtime	R	0=Normal 1=Alarm		sfan_rntm_alarm	BV:7010		
Switch Configuration	R	0=Normal 1=Alarm		di_cfg_alarm	BV:7025		
System is shut down	R	0=No 1=Yes		shutdown_status	BV:2011		
Unocc Free Cool	R/W	0=Disable 1=Enable	Inactive (0)	ntfc_ena	BV:80001		
Air Source Mode	R	1=Off 2=Warmup 3=Heating 4=Cooling 5=Freecool 6=Pressure 7=Evac 8=Vent		link_ahu_mode	MSV:2005		

Table B — Network Points List for BACnet and Modbus (cont)

Point Name	Point Access	Units	Default Value	BACnet Info		Modbus Info	
				BACnet Point Name	BACnet Object ID	Modbus Register Type	Modbus Register #
Compressor Stages	R/W	1=One Stage 2=Two Stages	2	comp_stages	MSV:91003		
Equipment Status	R	1=Disabled 2=Test 3=Run		mode_status	MSV:2001		
Fan Control	R/W	1=Single Speed 2=Two Speed 3=Variable Speed	3	fan_type	MSV:9031		
Fan Mode	R/W	1=Auto 2=Continuous 3=Always On	2	fan_mode	MSV:9032		
Input 1 Function	R/W	1=No Sensor 2=IAQ Sensor 3=OAQ Sensor 4=Space RH Sensor	1	ai1_function	MSV:81001		
Input 2 Function	R/W	1=No Sensor 2=IAQ Sensor 3=OAQ Sensor 4=Space RH Sensor	1	ai2_function	MSV:81002		
Input 3 Function	R/W	1=No Function 2=Compressory Safety 3=Fan Status 4=Filter Status 5=Remote Occupancy 6=Door Contact	2	di3_function	MSV:81003		
Input 3 Switch Configuration	R/W	1=NO 2=NC	1	di3_type	MSV:81013		
Input 5 Function	R/W	1=No Function 2=Fire Shutdown 3=Fan Status 4=Filter Status 5=Remote Occupancy 6=Door Contact	2	di5_function	MSV:81005		
Input 5 Switch Configuration	R/W	1=NO 2=NC	1	di5_type	MSV:81015		
Input 8 Function	R/W	1=No Function 2=Enthalpy Switch 3=Fan Status 4=Filter Status 5=Remote Occupancy 6=Door Contact	2	di8_function	MSV:81008		
Input 8 Switch Configuration	R/W	1=NO 2=NC	1	di8_type	MSV:81018		
Input 9 Function	R/W	1=No Function 2=HumidiStat 3=Fan Status 4=Filter Status 5=Remote Occupancy 6=Door Contact	2	di9_function	MSV:81009		
Input 9 Switch Configuration	R/W	1=NO 2=NC	1	di9_type	MSV:81019		
Number Of Heat Stages	R/W	1=1 2=2 3=0	2	heat_stages	MSV:91004		
Occupancy Source	R/W	1=Always Occupied 2=BACnet Schedule 3=BAS On/Off 4=Remote Occ Input	1	occ_source	MSV:1002		
Space sensor type	R/W	1=T55 2=T56 3=SPT Sensor 4=None	1	spt_type	MSV:9001		
Space Temp Source	R	1=Sensor Failure 2=SPT Sensor 3=T55 / T56 4=Network 5=Airside Linkage 6=Locked Value		spt_status	MSV:2003		

Table B — Network Points List for BACnet and Modbus (cont)

Point Name	Point Access	Units	Default Value	BACnet Info		Modbus Info	
				BACnet Point Name	BACnet Object ID	Modbus Register Type	Modbus Register #
Unit Type	R/W	1=Heat / Cool 2=LC WeatherExpert 3=HP O/B Ctrl 4=HP Y1/W1 Ctrl	2	unit_type	MSV:9018		
ZS Temp Sensor	R	0=Normal 1=Alarm		zst_sensor_fail	BV:7051		
Economizer Operation	R	0=Normal 1=Fault Detected		econ_opr	BV:7054		
Space Temperature Alarm Status	R	0=Normal 1=Alarm		spt_alrm_status	BV:7056		
SPT Sensor	R	°F		zone_temp_zone _temp	AI:1		
SPT Sensor	R	min		zone_temp_override _ time_remaining	AV:1		
input_10	R	°F		ai_10	AI:1010		
Factory Test Analog 1 Control	R/W	%	0	ao1_fac_test	AV:91001		
Economizer High OAT Lockout Temp	R/W	°F	75	oat_ec_lockout	AV:9008		
Maximum Heating SAT	R/W	°F	120	sat_ht_max	AV:83004		
Compressor 2 Runtime	R	hr		comp2_rntm	AV:2018		
Linkage Max Damper Position	R	%		link_max_dmpr	AV:2611		
Air Source Supply Air Temp	R	°F		link_sat	AV:2608		
Max VFD Output	R/W	%	100	max_vfd_spd	AV:3026		
Dehum Min VFD Output	R/W	%	100	dehum_min_vfd	AV:3028		
Air Source Outdoor Air Temp	R	°F		link_ahu_oat	AV:2609		
Stage 3 SAT Stpt	R/W	°F	56	stg_3_sat	AV:83010		
Stage 1 SAT Stpt	R/W	°F	57	stg_1_sat	AV:83008		
HP Aux Heat Lockout Temp	R/W	°F	40	oat_auxht_lockout	AV:3025		
input_1	R			ai_1	AI:1001		
Factory Test Analog 2 Control	R/W	V	0	ao2_fac_test	AV:91002		
Compressor 2 Service Alarm Timer	R/W	hr	0	comp2_service_hrs	AV:83007		
Compressor 1 Service Alarm Timer	R/W	hr	0	comp1_service_hrs	AV:83006		
Compressor 1 Runtime	R	hr		comp1_rntm	AV:2017		
Min VFD Output	R/W	%	40	min_vfd_spd	AV:3027		
Stage 2 SAT Stpt	R/W	°F	57	stg_2_sat	AV:83009		
slidepot voltage reading	R			slidepot_volts	AI:1012		
Filter Runtime	R	hr		filter_rntm	AV:2015		
Fan Off Delay	R/W	seconds	90	fan_delay_off	AV:9024		
input_7	R	°F		ai_7	AI:1007		
input_11	R			ai_11	AI:1011		
input_2	R			ai_2	AI:1002		
Minimum Cooling SAT	R/W	°F	50	sat_cl_min	AV:83003		
Power Fail Restart Delay	R/W	seconds	5	start_delay	AV:9007	Holding Register (Float)	127
Supply Fan Service Alarm Timer	R/W	hr	0	sfan_service_hrs	AV:83005		
Supply Fan Runtime	R	hr		sfan_rntm	AV:2014		
Indoor Air Quality CO2 (ppm)	R	ppm		iaq	AV:1009	Input Register (Float)	73
Supply Fan VFD	R	%		vfd_output	AV:2027		
Indoor Air Quality	R	0=Normal 1=Alarm		iaq_alarm	BV:7005	Discrete Input	33
Supply Air Temperature	R	0=Normal 1=Alarm		sat_alarm	BV:7004	Discrete Input	47
Space Relative Humidity	R	0=Normal 1=Alarm		sprh_hi_alarm	BV:7018	Discrete Input	34
Space Temp Sensor	R	0=Normal 1=Alarm		spt_fail	BV:7001	Discrete Input	46
Outdoor Air Quality CO2 (ppm)	R	ppm		oaq	AV:1012	Input Register (Float)	85
Gas Valve	R	0=Normal 1=Alarm		igc_alarm	BV:7050	Discrete Input	40
Setpoint	R/W	°F		occ_cl_stpt	AV:3001	Holding Register (Float)	9

Table C — Network Points List for N2 and LonWorks

Point Name	Point Access	Units	Default Value	N2		LonWorks	
				N2 Network Point Type	N2 Network Point	SNVT Type	SNVT Name
SA Vent / Temper Setpoint	R/W	°F	65	ADF	77		
Active Heat Stages	R			ADF	11	SNVT_count_inc(9)	nvoHtStgs
Effective Cool Setpoint	R	°F		ADF	22	SNVT_temp_p(105)	nvoEffCoolSP
High Space Temperature	R	0=Normal 1=Alarm		BI	35	SNVT_switch(95)	nvoHiSpTemp
Low Space Temperature	R	0=Normal 1=Alarm		BI	39	SNVT_switch(95)	nvoLoSpTmp
Supply Fan Relay State	R	0=Off 1=On		BI	23		
Supply Fan Status	R	0=Off 1=On		BI	24	SNVT_switch(95)	nvoFanStatus
Economizer Output	R	%Open		ADF	20	SNVT_lev_percent(81)	nvoEconOut
Outdoor Air Quality Sensor	R	0=Normal 1=Alarm		BI	41	SNVT_switch(95)	nvoOAQSensor
DCV Max Vent Damper Pos	R/W	%Open	50	ADF	18	SNVT_lev_percent(81)	nviDCVMaxPos
Space Temperature - Prime Variable	R	°F		ADF	48	SNVT_temp_p(105)	nvoSpaceTemp
HP Rev Cycle Lockout Temp	R/W	°F	-3	ADF	30	SNVT_temp_p(105)	nviHPRvClLk
System Outdoor Air Temperature	R/W	°F	-999	ADF	54	SNVT_temp_p(105)	nviSysOAT
Economizer Purge Min Pos	R/W	%Open	40	ADF	5	SNVT_lev_percent(81)	nvoEcnPrgMin
Active Compressor Stages	R			ADF	10	SNVT_count_inc(9)	nvoCmpStages
System Mode	R	1=Off 2=Fan Only 3=Economizer Cooling 4=Cooling 5=Heating 6=Dehumidification 7=Test 8=Shutdown 9=Unocc Free Cooling 10=Fire Shutdown 11=IAQ Override 12=Pre-occ Purge 13=IGC Override		ADI	13	SNVT_count_inc(9)	nvoOpMode
Supply Air Temperature	R	°F		ADF	49	SNVT_temp_p(105)	nvoSAT
DCV Max Ctrl Setpoint	R/W	ppm	650	ADF	17	SNVT_ppm(29)	nviDCVMaxPPM
Occ Relative Humidity Setpoint	R/W	%rh	60	ADF	36	SNVT_lev_percent(81)	nviOcRHSP
Occupancy Status	R	0=Unoccupied 1=Occupied		BI	18	SNVT_switch(95)	nvoOccStatus
Optimal Start Type	R/W	1=None 2=Temp Compensated 3=Learning Adaptive	2	ADI	20	SNVT_count_inc(9)	nviOptStType
Setpoint	R/W	°F		ADF	8	SNVT_temp_p(105)	nviUnoccHtSP
Space Relative Humidity Sensor	R	0=Normal 1=Alarm		BI	45	SNVT_switch(95)	nvoSpRHSenr
Setpoint Adjustment	R	°F		ADF	44	SNVT_temp_p(105)	nvoSPAdjust
Effective Heat Setpoint	R	°F		ADF	23	SNVT_temp_p(105)	nvoEffHeatSP
Low Fan Econ Min Pos	R/W	%Open	33	ADF	32	SNVT_lev_percent(81)	nviLwFnEcnMn
Fire / Smoke Shutdown	R	0=Normal 1=Alarm		BI	32	SNVT_switch(95)	nvoFrShtdwn
Reset Filter Alarm	R/W	0=Off 1=On	Inactive (0)	BO	22	SNVT_switch(95)	nviRstFilAlm
Setpoint	R/W	°F		ADF	7	SNVT_temp_p(105)	nviUnoccClSP
ZS Sensor Configuration	R	0=Normal 1=Alarm		BI	63	SNVT_switch(95)	nvoZsCfgFail
Space Relative Humidity	R	%rh		ADF	46	SNVT_lev_percent(81)	nvoSpaceRH
Outdoor Air Temperature	R	°F		ADF	38	SNVT_temp_p(105)	nvoOAT
Cooling Lockout Temperature	R/W	°F	45	ADF	16	SNVT_temp_p(105)	nviClLckTemp
Power Exhaust Setpoint	R/W	%Open	50	ADF	43	SNVT_lev_percent(81)	nviPwrExhSP
BAS On / Off	R/W	1=Inactive 2=Occupied 3=Unoccupied	1	ADI	1	SNVT_count_inc(9)	nviBASOnOff
System Space AQ	R/W	ppm	-999	ADF	39	SNVT_count_inc(9)	nviSysSpAQ

Table C — Network Points List for N2 and LonWorks (cont)

Point Name	Point Access	Units	Default Value	N2		LonWorks	
				N2 Network Point Type	N2 Network Point	SNVT Type	SNVT Name
System Space RH	R/W	%	-999	ADF	40	SNVT_lev_percent(81)	nviSysSpRH
Compressor Status	R	0=Normal 1=Alarm		BI	30	SNVT_switch(95)	nvoCmpSafety
Filter Service Alarm Timer	R/W	hr	600	ADF	28	SNVT_count_inc(9)	nviFltAlmTm
Indoor Air Quality Sensor	R	0=Normal 1=Alarm		BI	37	SNVT_switch(95)	nvoIAQSensor
Heating Lockout Temperature	R/W	°F	65	ADF	29	SNVT_temp_p(105)	nviHtLckTmp
Dehumidification	R	0=Inactive 1=Active		BI	9		
Reversing Valve Relay State	R	0=Off 1=On		BI	20		
Vent Dmpr Pos / DCV Min Pos	R/W	%Open	20	ADF	60	SNVT_lev_percent(81)	nviDCVMinPos
Filter	R	0=Clean 1=Dirty		BI	31	SNVT_switch(95)	nvoFilter
Safety Chain	R	0=Normal 1=Alarm		BI	43	SNVT_switch(95)	nvoSftyChain
Unocc Relative Humidity Setpoint	R/W	%rh	95	ADF	59	SNVT_lev_percent(81)	nviUnoccRHSP
Setpoint	R/W	°F		ADF	9	SNVT_temp_p(105)	nviOccHeatSP
Supply Air Temp Sensor	R	0=Normal 1=Alarm		BI	51	SNVT_switch(95)	nvoSATSensor
Override Time Remaining	R	min		ADF	41	SNVT_count_inc(9)	nvoOvrTmRem
Setpoint Adjustment	R/W	0=Disable 1=Enable	Active (1)	BO	26	SNVT_switch(95)	nviSPAdjEnbl
System Space Temp	R/W	°F	-999	ADF	56	SNVT_temp_p(105)	nviSysSpTmp
System Outdoor AQ	R/W	ppm	-999	ADF	63		
Outdoor Air Temp Sensor	R	0=Normal 1=Alarm		BI	27		
SPT Sensor	R	0=Normal 1=Alarm		BI	38		
Fan / Speed	R	1=Off 2=Low 3=Med 4=High 5=On		ADI	4		
Setpoint Adjustment Range	R/W	°^F	5	ADF	45	SNVT_count_inc(9)	nviSPAdjRng
Enthalpy (BACnet)	R/W	0=High 1=Low	Active (1)	BO	6	SNVT_switch(95)	nviSysEnth
Optimal Start	R/W	hr	1	ADF	61	SNVT_count_inc(9)	nviOptmStart
Power Fail Restart Delay	R/W	seconds	5	ADF	58	SNVT_count_inc(9)	nviUntStrDly
Indoor Air Quality CO2 (ppm)	R	ppm		ADF	31	SNVT_ppm(29)	nvoIAQ
Indoor Air Quality	R	0=Normal 1=Alarm		BI	33	SNVT_switch(95)	nvoIAQAlm
Supply Air Temperature	R	0=Normal 1=Alarm		BI	47	SNVT_switch(95)	nvoSATAlm
Space Relative Humidity	R	0=Normal 1=Alarm		BI	34	SNVT_switch(95)	nvoHiSPRHAlm
Space Temp Sensor	R	0=Normal 1=Alarm		BI	46	SNVT_switch(95)	nvoSPTmpSen
Outdoor Air Quality CO2 (ppm)	R	ppm		ADF	37	SNVT_ppm(29)	nvoOAQ
Gas Valve	R	0=Normal 1=Alarm		BI	40	SNVT_switch(95)	nvoGasVlvAlm
Setpoint	R/W	°F		ADF	4	SNVT_temp_p(105)	nviOccCoolSP

© 2020 Bryant Heating & Cooling Systems

Manufacturer reserves the right to change, at any time, specifications and designs without notice and without obligations.

RTU OPEN CONTROLLER START-UP SHEET

RTU Model Number: _____ Date: _____

RTU Serial Number: _____ Performed by: _____

RTU Open Software Version: _____ Company: _____

Protocol and Baud Rate: _____ Network Address: _____

CONFIGURATION POINTS

POINT NAME	BACnet OBJECT	RANGE	DEFAULT	ENTRY
SETPOINT				
Occupied Heating Setpoint	occupied_heat_setpoint	40-90 °F	70	
Occupied Cooling Setpoint	occupied_cool_setpoint	55-99 °F	76	
Unoccupied Heating Setpoint	unoccupied_heat_setpoint	40-90 °F	55	
Unoccupied Cooling Setpoint	unoccupied_cool_setpoint	45-99 °F	90	
Effective Heat Setpoint	effective_heat_setpoint	0-120 °F		
Effective Cool Setpoint	effective_cool_setpoint	0-120 °F		
Optimal Start	optm_start	0-4 hr	1	
Optimal Start Type	start_type	1=None 2=Temp Compensated 3=Learning Adaptive	Temperature Compensated	
Heat Start K factor (min/deg)	h_kfactor	0-99	15	
Cool Start K factor (min/deg)	c_kfactor	0-99	15	
Occ Relative Humidity Setpoint	occ_dehum_stpt	0-unocc setpoint %rh	60	
Unocc Relative Humidity Setpoint	unocc_dehum_stpt	30-100 %rh	95	
DCV Max Ctrl Setpoint	iaq_stpt_max	0-9999 ppm	650	
Power Exhaust Setpoint*	pexh_stpt	20-90 %Open	50	
SPACE TEMPERATURE ALARM				
Occupied Alarm Hysteresis	occ_spt_alrm_hyst	0-20°F	5	
Alarm Delay (min/deg)	spt_alrm_delay	0-60 minutes	10	
Unoccupied Low SPT Alarm Limit	uno_spt_alrm_lo_lmt	35-90 °F	45	
Unoccupied High SPT Alarm Limit	uno_spt_alrm_hi_lmt	45-100 °F	95	
SUPPLY TEMPERATURE ALARM				
Low SAT Alarm Limit	sat_lo_alrm_lim	15-90 °F	38	
High SAT Alarm Limit	sat_hi_alrm_lim	90-175 °F	160	
SPACE HUMIDITY ALARM				
Occupied High RH Alarm Limit (%RH)	sprh_hi_alrm_lim	0-100%rh	70%rh	
Alarm Delay (min/%RH)	sprh_delay	0-30 min	5 min	
Unoccupied High RH Alarm Limit (%RH)	unocc_sprh_lmt	0-100%rh	100%rh	
Low RH Alarm Limit (%RH)	sprh_lo_alrm_lim	0-100%rh	30%rh	
IAQ / VENTILATION ALARM				
Occupied High CO2 Alarm Limit (ppm)	iaq_occ_hi_lmt	0-9999 ppm	1200	
UNIT CONFIGURATION				
Fan Mode	fan_mode	1=Auto 2=Continuous 3=Always On	Continuous	
Power Fail Restart Delay	start_delay	0-30 sec	5	
Fan Off Delay	fan_delay_off	0-180 sec	90	
Minimum Cooling SAT	sat_cl_min	45-75°F	50	
Maximum Heating SAT	sat_ht_max	85-150°F	120	

CONFIGURATION POINTS (CONT)

POINT NAME	BACnet OBJECT	RANGE	DEFAULT	ENTRY
UNIT CONFIGURATION (cont)				
Vent Dmpr Pos / DCV Min Pos	econ_min	0-100% Open	20	
Economizer Purge Min Pos	econ_purge_min	0-100% Open	40	
Low Fan Econ Min Pos†	econ_min_2	0-100% Open	33	
DCV Max Vent Damper Pos	iaq_dpr_max	0-75% Open	50	
Supply Fan Service Alarm Timer	sfan_service_hrs	0-9999 hr	600	
Comp 1 Service Alarm Timer	comp1_service_hrs	0-9999 hr	0	
Comp 2 Service Alarm Timer	comp2_service_hrs	0-9999 hr	0	
Filter Service Alarm Timer	filter_service_hrs	0-9999 hr	600	
Door Alarm Delay	door_alarm_delay	0-180 sec	60	
Pushbutton Override	pb_enable	Disable/Enable	Enable	
Setpoint Adjustment	stpt_adj_enable	Disable/Enable	Enable	
Setpoint Adjustment Range	stpt_adj_range	+/-0-5°F	5	
Cooling Lockout Temperature	oat_cl_lockout	0-80°F	45	
Economizer High OAT Lockout Temp	oat_ec_lockout	55-80°F	75	
HP Rev Cycle Lockout Temp**	hp_rev_cycle_lockout	-20-65°F	-3	
HP Aux Heat Lockout Temp**	oat_auxht_lockout	-20-65°F	40	
Heating Lockout Temperature	oat_ht_lockout	35-150°F	65	
Pre Occupancy Purge	preocc_purge	Disable/Enable	Disable	
Purge Time	purge_time	0-240 min	60 min	
Unocc Free Cool	ntfc_ena	Disable/Enable	Disable	
Min Setpoint Separation	min_stpt_sep	2-10°F	5	
Occupancy Source	occ_source	1=Always Occupied 2=BACnet Schedule 3=BAS on/off 4=Remote Occ Input	Always Occupied	
INPUT CONFIGURATION				
Input 1 Function	ai1_function	1=No Sensor 2=IAO Sensor 3=OAQ Sensor 4=Space RH Sensor	IAQ Sensor	
Input 2 Function	ai2_function	1=No Sensor 2=IAO Sensor 3=OAQ Sensor 4=Space RH Sensor	No Sensor	
Input 3 Function	di3_function	1=No Function 2=Compressor Safety 3=Fan Status 4=Filter Status 5=Remote Occupancy 6=Door Contact	Compressor Safety	
Input 3 Switch Configuration	di3_type	N/O N/C	N/O	
Input 5 Function	di5_function	1=No Function 2=Fire Shutdown 3=Fan Status 4=Filter Status 5=Remote Occupancy 6=Door Contact	Fire Shutdown	
Input 5 Switch Configuration	di5_type	N/O N/C	N/C	
Input 8 Function	di8_function	1=No Function 2=Enthalpy Switch 3=Fan Status 4=Filter Status 5=Remote Occupancy 6=Door Contact	Enthalpy Switch	
Input 8 Switch Configuration	di8_type	N/O N/C	N/O	

CONFIGURATION POINTS (CONT)

POINT NAME	BACnet OBJECT	RANGE	DEFAULT	ENTRY
INPUT CONFIGURATION (cont)				
Input 9 Function	di9_function	1=No Function 2=Humidistat 3=Fan Status 4=Filter Status 5=Remote Occupancy 6=Door Contact	Humidistat	
Input 9 Switch Configuration	di9_type	N/O N/C	N/O	
Space sensor type	spt_type	1=T55 2=T56 (use for T59) 3=SPT Sensor 4=None 5=ZS Sensor	None	
ZS Sensor Binder	zs_binder	Rnet/Unused	Rnet	
ZS Zone Temp	zs_zone_temp	Zone Temp (1-5)	Main ZS Sensor	
ZS Zone Humidity	zs_zone_humidity	Zone Humidity (1-5)	Main ZS Sensor	
ZS Zone CO2	zs_zone_co2	Zone CO2 (1-5)	Main ZS Sensor	
SENSOR CALIBRATION				
Space Temperature	lcl_space_temp			
Space Temp Calibration	spt_offset	-9.9-10°F	0	
Space RH	lcl_space_rh	0-100%		
Space AQ	lcl_space_aq	0-5000ppm		
Supply Air Temperature	lcl_sa_temp	-56-245°F		
Supply Air Temp Calibration	sat_offset	-9.9-10°F	0	
Outdoor Air Temperature	lc_oa_temp	-56-245°F		
Outdoor Air Temp Calibration	oat_offset	-9.9-10°F	0	
SERVICE CONFIGURATION				
Unit Type	unit_type	1=Heat / Cool 2=n/a 3=HP O/B Ctrl 4=HP Y1/W1 Ctrl	Heat/Cool (582J/559J, 580J/558J,581J/551J, 582K/559K, and 581K/551K models) HP Y1/W1 Cltl (547J,548J, 549J, 547K, and 549K models	
Compressor Stages	comp_stages	1=One Stage 2=Two Stages	One Stage (580J/558J and 581J/551J sizes 04-07, and A08-A12, 582J/559J and 582K/559K sizes 04-06,) Two Stages (580J/558J and 581J/551J sizes 08-30, 581K/551K sizes 04-06, 582K/559K size 07)	
Economizer Exists	econ_exist	No/Yes	No (No FIOP) Yes (FIOP)	
Fan Control	fan_type	1=Single Speed 2=Two Speed 3=Variable Speed	Single Speed (582J/559J, 580J/558J and 581J/551J sizes 04-07 and A08-12) Two Speed (580J/558J and 581J/551J 08-30) Variable (582K/559K and 581K/551K sizes 04-07)	
VFD Input	vfd_in_type	0-10Vdc/2-10Vdc	0-10Vdc (582/559K and 581/551K sizes 04-07)	
Show VFD Config as	vfd_spd_cfg	Percentage/Voltage	Voltage (582/559K and 581/551K sizes 04-07)	
IDF Max Speed Voltage	max_spd_volt	0-10vdc	10Vdc	
IDF Min Speed Voltage	min_spd_volt	0-10vdc	5.2Vdc	
IDF Heat Speed Voltage	ht_spd_volt	0-10vdc	5.2Vdc	
Max VFD Output	max_vfd_spd	33-100%	100%	
Min VFD Output	min_vfd_spd	33-100%	40%	
Heating VFD Output	heat_vfd_spd	20-100%	100%	
Stage 1 SAT Stpt	stg_1_sat	45-75°F	57°F	
Stage 2 SAT Stpt	stg_2_sat	45-75°F	55°F (582/559K and 581/551K sizes 04-07)	
Stage 3 SAT Stpt	stg_3_sat	45-75°F	56°F	
Reversing Valve Output††	rev_vlv_type	O output type/B output type	O output type	

POINT NAME	BACnet OBJECT	RANGE	DEFAULT	ENTRY
SERVICE CONFIGURATION (cont)				
Heat Type	heat_type	Electric/Gas	Gas (580J/581J/582J, 582K/551K series units) Electric (558J/551J/559J/559K/551K and 548J/549J/547J/547K/549K series units)	
Number of Heat Stages	heat_stages	1=1 stage 2=2 stages 3=0 stage	0 (558J/551J/559J/559K/551K series electric no heat units) 1 (All Heatpumps, Low Nox units, single phase gas units) 1 (582J/580J 04-09 low and 05-07 med heat 3 phase gas units) 1 (551K 04-06 low heat) 1 (551K 04-05 med heat) 1 (551K 04 high heat 230v 3 phase or 460v) 1 (551K 06 med heat 460v or 575v) 1 (551K 05 high heat 460v) 1 (582K 04-07 low heat) 1 (582K 05-07 med heat) 2 (582J/559J, 580J/558J 04 and 08-09 med) 2 (582J/559J, 580J/558J 05-09 high heat 3 phase gas units) 2 (581J 04-09 3 phase gas units) 2 (580J/581J 12-20 size) 2 (551K 04-06 high heat 230v 1 phase or 575v) 2 (551K 06 med heat 230v 3 phase) 2 (551K 05 high heat 230v 3 phase) 2 (551K 06 high heat) 2 (581K 04-06 230v 3 phase, 460v, or 575v) 2 (582K 05-07 high heat 230v 3 phase, 460v, or 575v) 2 (582K 04 med heat 230v 3 phase, 460v, or 575v)	
SA Tempering	sa_tempering_en	Disable/Enable	Disable	
Continuous Occupied Exhaust	occ_exh	No/Yes	No	
RH Control	rh_enable	Disable/Enable	Enable (Units with Perfect Humidity FIOP) Disable (Units w/o Perfect Humidity FIOP)	
DCV Control	dcv_enable	Disable/Enable	Disable	
Indoor CO2 Sensor Value @ Min mA	iaq_ref_lo_ppm	0-9999ppm	0	
Indoor CO2 Sensor Value @ Max mA	iaq_ref_hi_ppm	0-9999ppm	2000	
Outdoor CO2 Sensor Value @ Min mA	oaq_ref_lo_ppm	0-9999ppm	0	
Outdoor CO2 Sensor Value @ Max mA	oaq_ref_hi_ppm	0-9999ppm	2000	
System Space Temperature	system_spt			
System Space RH	system_rh			
System Space AQ	system_iaq			
System Outdoor AQ	system_oaq			
System Cool Demand Level	cool_demand_level	0-3	0	
System Heat Demand Level	heat_demand_level	0-3	0	
System Outdoor Air Temperature	system_oat			
System Fire/Smoke		off/on	off	
Economizer High OAT Lockout Temp	oat_ec_lockout	55-80°F	75	
Vent Dmpr Pos / DCV Min Pos	econ_min	0-100%Open	20	
Economizer Purge Min Pos	econ_purge_min	0-100%Open	40	

CONFIGURATION POINTS (CONT)

POINT NAME	BACnet OBJECT	RANGE	DEFAULT	ENTRY
SERVICE CONFIGURATION (cont)				
Low Fan Econ Min Pos	econ_min_2	0-100%Open	33	
DCV Max Vent Damper Pos	iaq_dpr_max	0-75%Open	50	
HP Rev Cycle Lockout Temp	hp_rev_cycle_lockout	-20-30°F	-3	
Occupancy Source	occ_source	1=Always occupied 2=BACnet Schedule 3=BAS On/Off 4=Remote Occ Input	Always Occupied	
SERVICE TEST				
Service Test	test_enable	Disable/Enable	Disable	
Fan Test	fan_test	Disable/Enable	Disable	
High Speed Fan Test	hi_spd_test	Disable/Enable	Disable	
Compressor 1 Test	comp1_test	Disable/Enable	Disable	
Compressor 2 Test	comp2_test	Disable/Enable	Disable	
Heat 1 Test	heat1_test	Disable/Enable	Disable	
Heat 2 Test	heat2_test	Disable/Enable	Disable	
Reversing Valve Test	rev_vlv_test	Disable/Enable	Disable	
Dehumidification Test	dehum_test	Disable/Enable	Disable	
Power Exhaust Test	pexh_test	Disable/Enable	Disable	
Economizer Test	econ_test	0-100%Open	0	
VFD Speed Test	vfd_spd_test	0-100%	0	

* This point is hidden from view when Continuous Occupied Exhaust is enabled.
† This point is only visible when Fan Control is configured for Two Speed.
** This point is only visible when Unit Type is configured for HP O/B Ctrl or HP Y1/W1 Ctrl.
†† This point is only visible when the Unit Type is configured for HP O/B Ctrl.

CUT ALONG DOTTED LINE

CUT ALONG DOTTED LINE

© 2020 Bryant Heating & Cooling Systems
Cat. No. 04-53580016-01 Edition Date: 01-2020 Printed in U.S.A **Form No: TS-RTU-01**

Manufacturer reserves the right to change, at any time, specifications and designs without notice and without obligations.

Replaces: TS-580J-02