Carrier
United Technologies

Omnizone™ 50XCA06-14 Air-Cooled Indoor Self-Contained Systems

Installation, Start-Up and Service Instructions

CONTENTS

Page

SAFETY CONSIDERATIONS 1
GENERAL 2
INSTALLATION 2-15
Step 1 — Complete Pre-Installation Checks 2
Step 2 — Rig and Place Unit 8
Step 3 — Install Additional Vibration Isolation (if Required) 8
Step 4 — Install Ductwork 8
Step 5 — Install Condensate Drain Line 11
Step 6 — Complete Electrical Connections 11
Step 7 — Install Plenums (if Required) 13
Step 8 — Check Fan Sheave and Belt Alignment 14
START-UP 16-25
General 16
Compressor Rotation 23
Operating Sequence 23
Low Ambient Operation (Factory Installed) 24
Configuration of Low Ambient Kit (Field Installation) 24
SERVICE 25,26
Cleaning Evaporator and Condenser Coils 25
Lubrication 25
Condenser Fan Adjustment 25
Pulley Alignment 25
Belt Tension Adjustment 25
Changing Fan Wheel 25
Fan Bearing Replacement 25
Concentric Alignment 26
Evaporator and Condenser Motor Starter Setting (after Lockout/Tagout) 26
MAINTENANCE 27
Cleaning 27
Inspection 27
Air Filters 27
Condensate Drain 27
Checking System Charge 27
Access Panel Removal 27
Evaporator-Fan Motor Removal 27
Pressure Relief Device 27
Current Protection Device 27
High and Low-Pressure Switch 27
Oil Charge 27
TROUBLESHOOTING 28-39
START-UP CHECKLIST CL-1, CL-2

SAFETY CONSIDERATIONS

Installing, starting up, and servicing air-conditioning components and equipment can be dangerous. Only trained, qualified installers and service mechanics should install, start-up, and service this equipment.

When working on the equipment, observe precautions in the literature and on the tags, stickers, and labels attached to the equipment. Follow all safety codes. Wear safety glasses and work gloves.

⚠ WARNING

Electrical shock can cause personal injury and death. Shut off all power to this equipment during installation. There may be more than one disconnect switch. Tag all disconnect locations to alert others not to restore power until work is completed.

⚠ CAUTION

Use care in handling, rigging, and setting bulky equipment. Personal injury could result.

⚠ WARNING

DO NOT USE TORCH to remove any component. System contains oil and refrigerant under pressure.

To remove a component, wear protective gloves and goggles and proceed as follows:

a. Shut off electrical power to unit.
b. Recover refrigerant to relieve all pressure from system using both high-pressure and low pressure ports.
c. Traces of vapor should be displaced with nitrogen and the work area should be well ventilated. Refrigerant in contact with an open flame produces toxic gases.
d. Cut component connection tubing with tubing cutter and remove component from unit. Use a pan to catch any oil that may come out of the lines and as a gage for how much oil to add to the system.
e. Carefully unsweat remaining tubing stubs when necessary. Oil can ignite when exposed to torch flame.

Failure to follow these procedures may result in personal injury or death.

⚠ CAUTION

DO NOT re-use compressor oil or any oil that has been exposed to the atmosphere. Dispose of oil per local codes and regulations. DO NOT leave refrigerant system open to air any longer than the actual time required to service the equipment. Seal circuits being serviced and charge with dry nitrogen to prevent oil contamination when timely repairs cannot be completed. Failure to follow these procedures may result in damage to equipment.

Manufacturer reserves the right to discontinue, or change at any time, specifications or designs without notice and without incurring obligations.

GENERAL

Omnizone™ indoor packaged units are designed to provide the flexibility required in replacement, renovation, and new construction. Units are available in 4 sizes from 5 tons to 12 tons. Belt-drive condensers provide adequate static to overcome normal ducting and louver static losses. This allows units to be positioned against an existing window or wall louver, or ducted to the outside as required.

Convenient rear connections allow easy access for outside air connections. Unit supply air discharge is vertical as standard, and horizontal as optional for sizes 12 and 14. These vertical packaged units are fully piped and wired. Units are complete with a belt drive evaporator section and built-in ducted air-cooled condenser.

Most units are designed to fit through most standard doors. See Fig. 1-5 for unit dimensions and refer to Table 1 for unit operating weights.

INSTALLATION

Omnizone 50XCA units are intended for indoor installation only. Determine building alterations required to run piping, wiring and ductwork. Follow dimensional drawings for ductwork, piping locations, electrical wiring and overall unit dimensions. Read all installation instructions before installing the unit.

Step 1 — Complete Pre-Installation Checks — Examine unit for damage that might have incurred during shipment. File claim immediately with transit company if damage is found. Check the shipment for completeness. Verify that the nameplate electrical requirements match the available power supply.

DO NOT place the unit in a horizontal position. Do not allow refrigerant lines to come into contact with wiring or sharp objects or edges. Do not lift or move unit by putting pressure on refrigerant lines, blowers, compressors, motors, or coils.

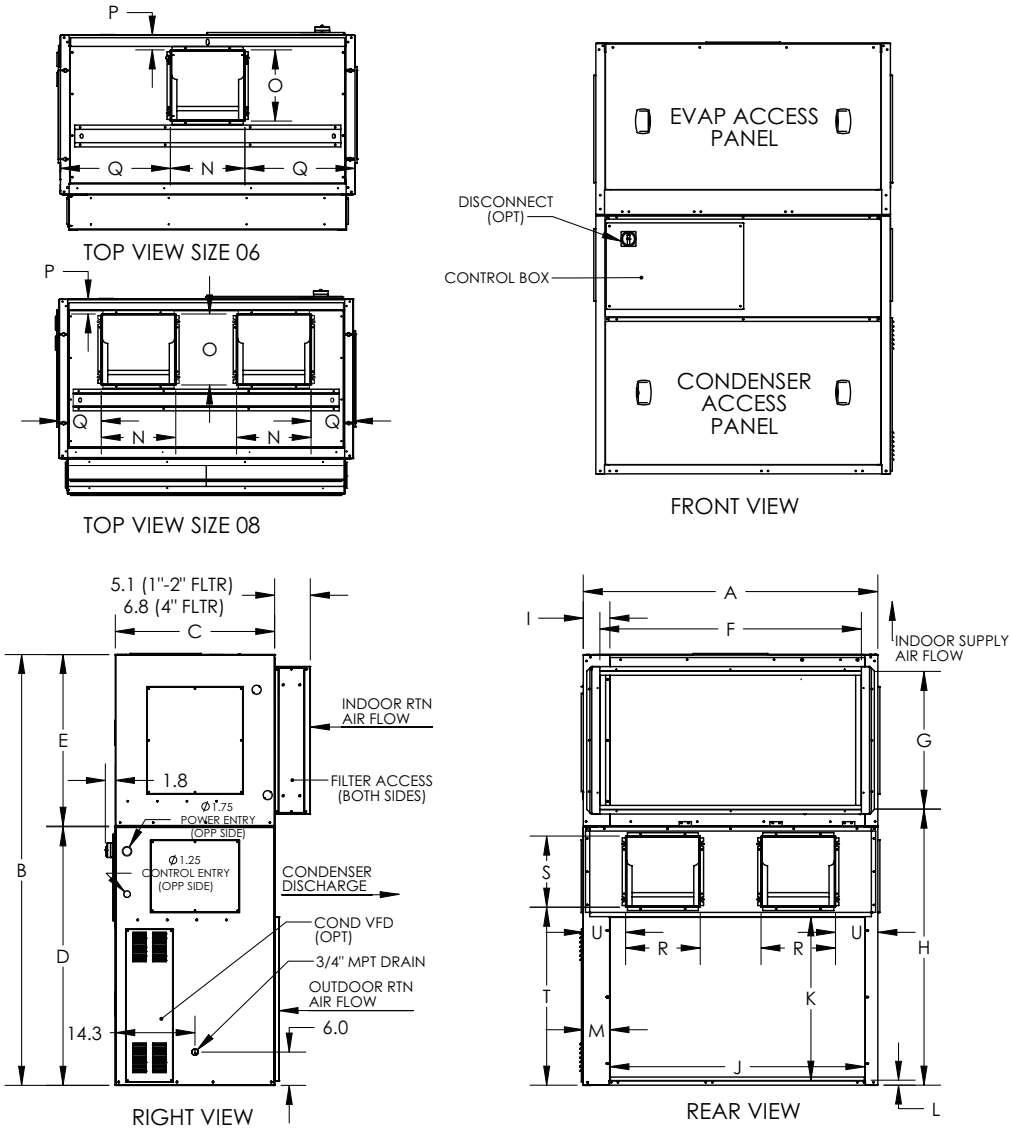

UNIT 50XCA	WIDTH	HEIGHT	DEPTH	COND SECTION	EVAP SECTION	EVAP RETURN DUCT				COND RETURN DUCT				EVAP SUPPLY DUCT (Blower Opening)				COND DISCHARGE DUCT (Blower Opening)			
	A	B	C	D	E	F	G	H	I	J	K	L	M	N	O	P	Q	R	S	T	U
06	53.1	77.1	29.0	46.6	31.0	47.2	24.8	49.8	4.8	46	29.4	0.9	4.8	13.4	12.8	2.7	19.8	13.4	12.8	32.1	7.6
08	53.1	77.1	29.0	46.6	31.0	47.2	24.8	49.8	4.8	46	29.4	0.9	4.8	13.4	12.8	2.7	7.6	13.4	12.8	32.1	7.6

NOTE: Dimensions are in inches.

Fig. 1 — Base Unit Dimensions — 50XCA06,08 (Rear Return, Vertical Discharge)

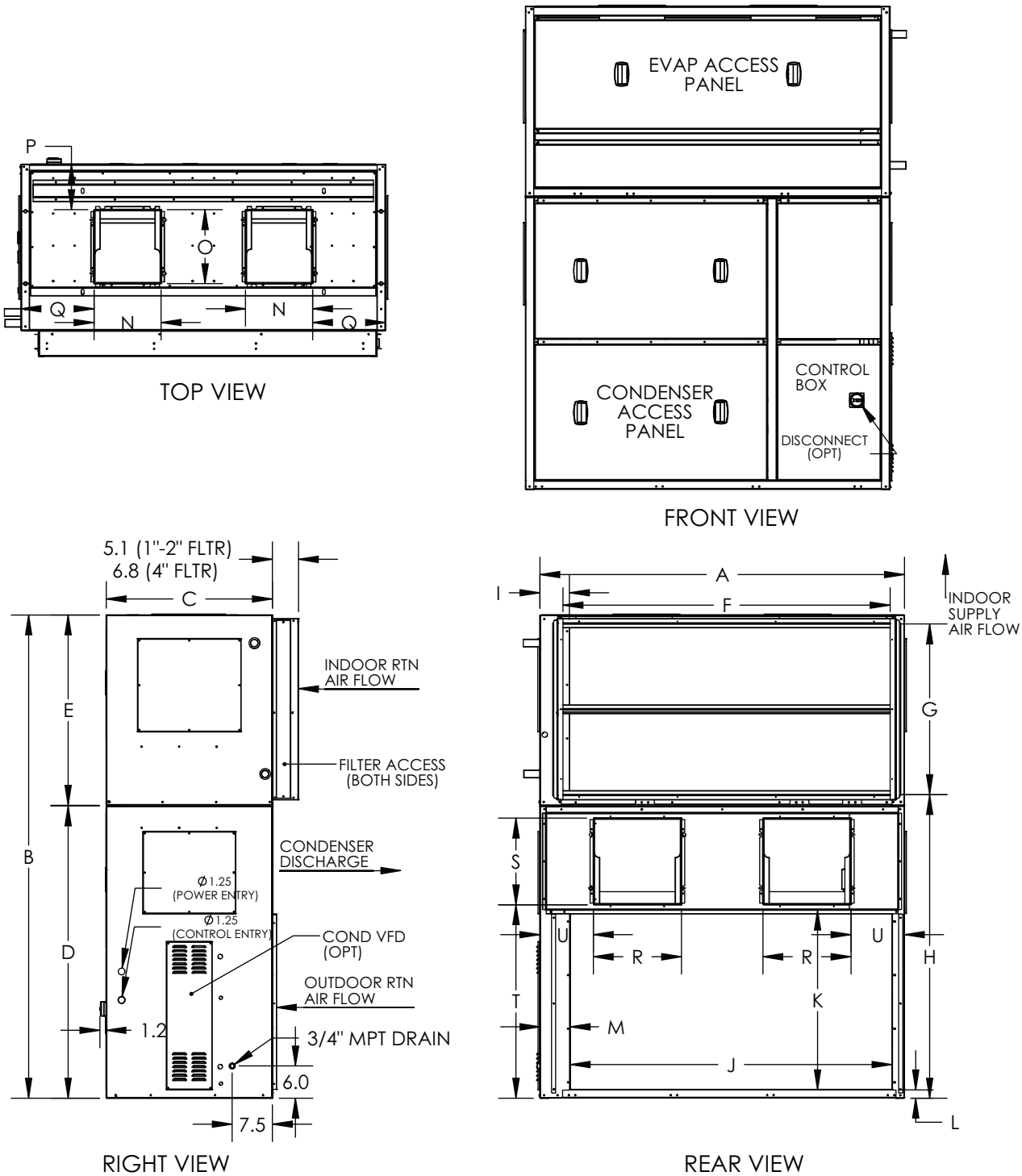

UNIT 50XCA	WIDTH	HEIGHT	DEPTH	COND SECTION	EVAP SECTION	EVAP RETURN DUCT				COND RETURN DUCT				EVAP SUPPLY DUCT (Blower Opening)				COND DISCHARGE DUCT (Blower Opening)			
	A	B	C	D	E	F	G	H	I	J	K	L	M	N	O	P	Q	R	S	T	U
12	68.0	90.1	31.2	54.5	35.5	61.1	31.8	56.7	5.5	60	32.8	1.5	5.7	12.5	13.8	8.5	13.6	16.4	16.2	36.5	11.5
14	88.0	90.1	31.2	54.5	35.5	81.0	31.8	56.7	2.5	80	32.8	1.5	5.7	12.5	13.8	8.5	23.6	18.9	16.2	36.6	17.2

NOTE: Dimensions are in inches.

Fig. 2 — Base Unit Dimensions — 50XCA12,14 (Rear Return, Vertical Discharge)

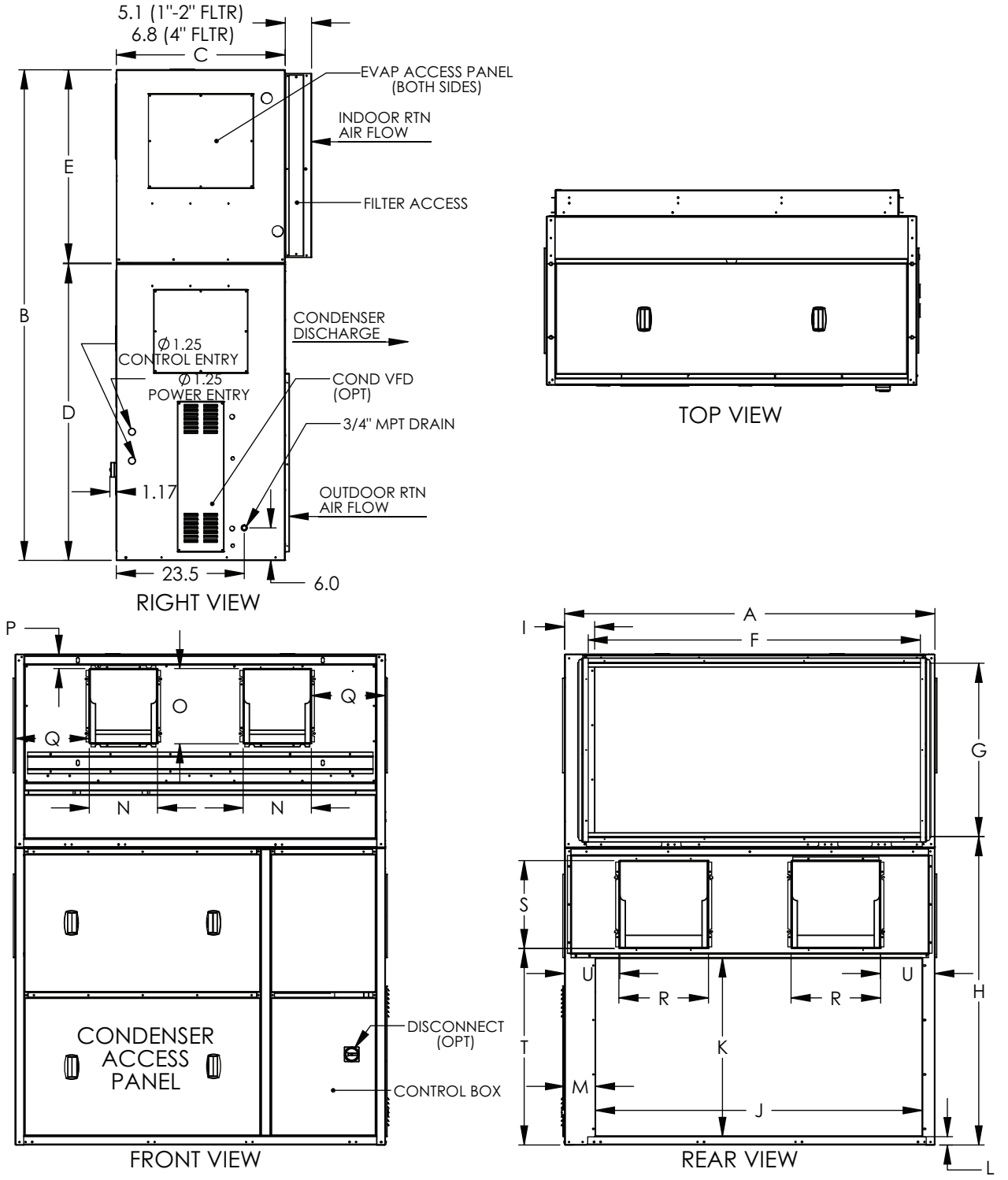

UNIT 50XCA	WIDTH	HEIGHT	DEPTH	COND SECTION	EVAP SECTION	EVAP RETURN DUCT				COND RETURN DUCT				EVAP SUPPLY DUCT (Blower Opening)				COND DISCHARGE DUCT (Blower Opening)			
	A	B	C	D	E	F	G	H	I	J	K	L	M	N	O	P	Q	R	S	T	U
12	68.0	90.1	31.2	54.5	35.5	61.1	31.8	56.7	5.5	60	32.8	1.5	5.7	12.5	13.8	2.7	13.6	16.4	16.2	36.5	11.5
14	88.0	90.1	31.2	54.5	35.5	81.0	31.8	56.7	2.5	80	32.8	1.5	5.7	12.5	13.8	2.7	23.6	18.9	16.2	36.6	17.2

NOTE: Dimensions are in inches.

Fig. 3 — Base Unit Dimensions — 50XCA12,14 (Rear Return, Horizontal Discharge)

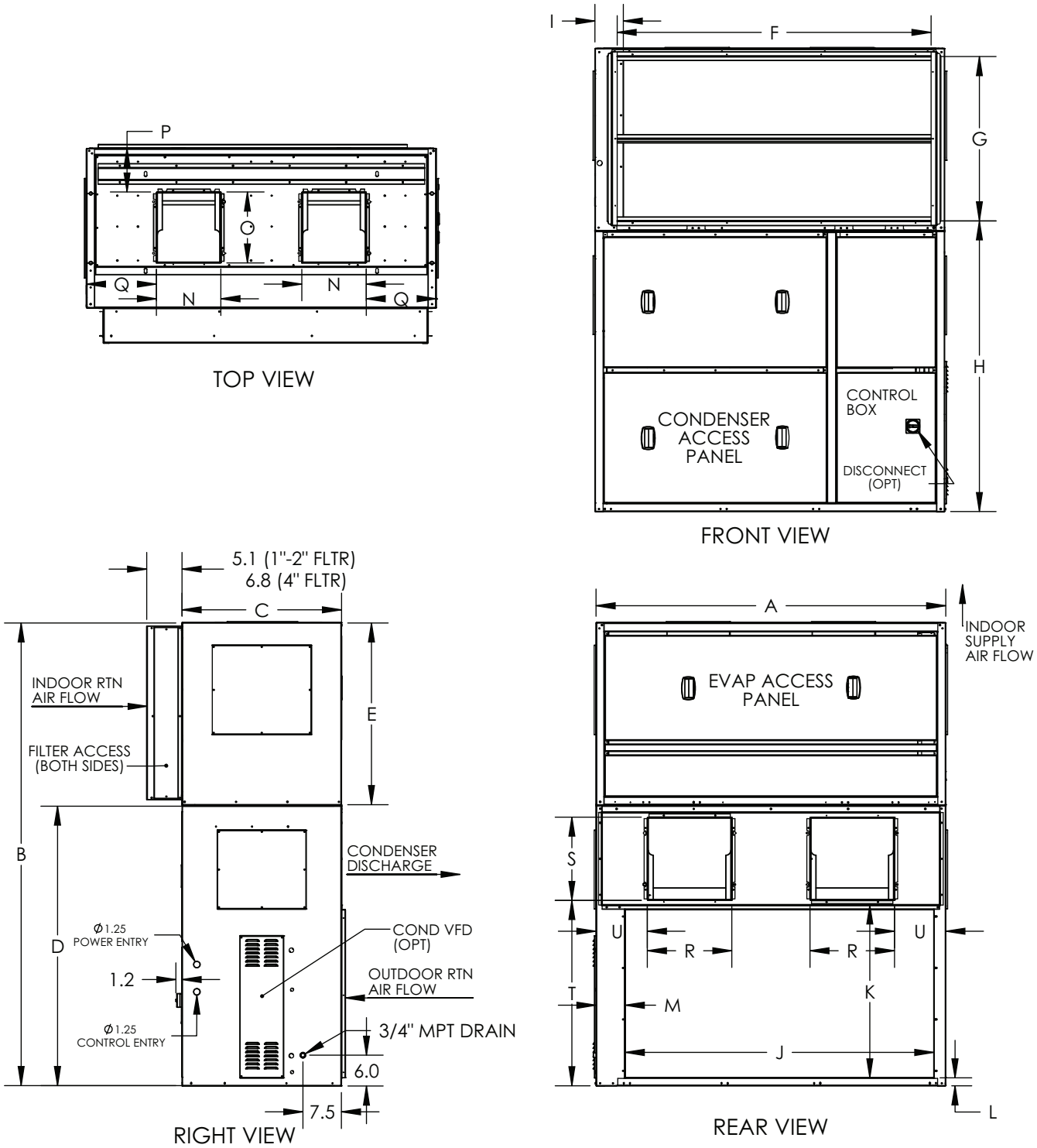

UNIT 50XCA	WIDTH	HEIGHT	DEPTH	COND SECTION	EVAP SECTION	EVAP RETURN DUCT				COND RETURN DUCT				EVAP SUPPLY DUCT (Blower Opening)				COND DISCHARGE DUCT (Blower Opening)			
	A	B	C	D	E	F	G	H	I	J	K	L	M	N	O	P	Q	R	S	T	U
12	68.0	90.1	31.2	54.5	35.5	61.1	31.8	56.7	5.5	60	32.8	1.5	5.7	12.5	13.8	8.5	13.6	16.4	16.2	36.5	11.5
14	88.0	90.1	31.2	54.5	35.5	81.0	31.8	56.7	2.5	80	32.8	1.5	5.7	12.5	13.8	8.9	23.6	18.9	16.2	36.6	17.2

NOTE: Dimensions are in inches.

Fig. 4 — Base Unit Dimensions — 50XCA12,14 (Front Return, Vertical Discharge)

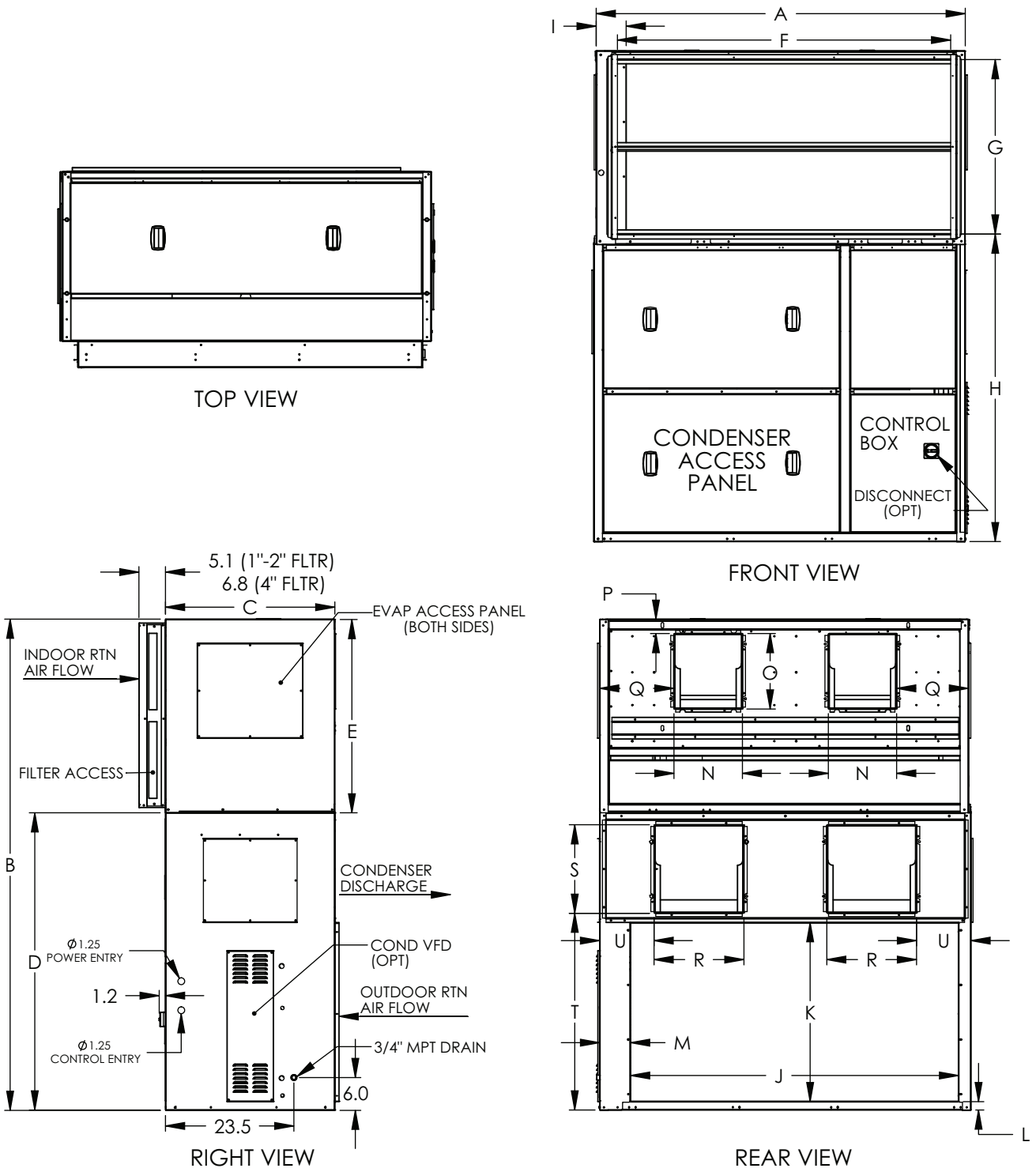

UNIT 50XCA	WIDTH	HEIGHT	DEPTH	COND SECTION	EVAP SECTION	EVAP RETURN DUCT				COND RETURN DUCT				EVAP SUPPLY DUCT (Blower Opening)				COND DISCHARGE DUCT (Blower Opening)			
	A	B	C	D	E	F	G	H	I	J	K	L	M	N	O	P	Q	R	S	T	U
12	68.0	90.1	31.2	54.5	35.5	61.1	31.8	56.7	5.5	60	32.8	1.5	5.7	12.5	13.8	2.6	13.6	16.4	16.2	36.5	11.5
14	88.0	90.1	31.2	54.5	35.5	81.0	31.8	56.7	2.5	80	32.8	1.5	5.7	12.5	13.8	2.6	23.6	18.9	16.2	36.6	17.2

NOTE: Dimensions are in inches.

Fig. 5 — Base Unit Dimensions — 50XCA12,14 (Front Return, Horizontal Discharge)

Table 1 — Physical Data

UNIT 50XCA	06	08	12	14
NOMINAL CAPACITY (tons)	5	7.5	10	12
UNIT OPERATING WEIGHT (lb)	891	1144	1269	1298
COMPRESSOR	Scroll			
Compressor Model	ZP57	ZP67	ZP54/ZP49	ZP61/ZP57
Qty	1	1	2	2
Steps of Control	1	1	2	2
Operating Charge R-410A (lb)	17.4	21.4	32.8	42.4
EVAPORATOR FAN	Adjustable, Belt-Drive, Centrifugal			
Nominal Cfm	1750	2625	3500	4375
Cfm Range	1500 - 2500	2250 - 3750	3000 - 5000	3600 - 6000
Available Static (in. wg)	0 - 1.6	0 - 1.6	0 - 1.6	0 - 1.6
Evaporator Fan Size	110-10R	110-10R	120-9R	120-9R
Number of Evaporator Fans	1	2	2	2
Standard Speed Range (Rpm)	576 - 782	712 - 949	656 - 875	712 - 949
Max. Allowable Rpm	1600	1700	1700	1700
Vertical Belt (Type)	A48	BX41	BX48	BX47
Fan Pulley (Type)	AK89	BK65	BK70	BK65
Motor Pulley (Type)	1VL44	1VP34	1VP34	1VP34
Std Hp	.5	1	1	1.5
Hp Range	.5 - 2	1 - 2	1 - 3	1.5 - 3
Fan Shaft Size (in.)	0.75	1	1	1
Motor Shaft Size (in.)	0.625	0.875	0.875	0.875
Center Distance (in.) - Vertical	15.3	15.3	18.1	18.1
Center Distance (in.) - Horizontal	N/A	N/A	15.5	13.0
EVAPORATOR COIL	$^3/_8$-in. OD, Enhanced Copper Tube, Aluminum Fins			
Quantity Rows ... Fin/in.	4...12	4...12	3...15	4...15
Fin Block Size (H x L) (in.)	28 x 34	28 x 46	32 x 60	32 x 60
Face Area (sq ft)	6.6	8.9	13.3	13.3
RETURN AIR FILTERS				
Std 1 in., throwaway	(2) 25 x 25	(2) 25 x 25	(8) 16 x 16	(8) 16 x 16 (2) 16 x 20
CONDENSER FAN	Adjustable, Belt-Drive, Centrifugal			
Nominal Cfm	2800	3500	5500	8000
Cfm Range	2100 - 3500	2625 - 4300	4125 - 6875	6000 - 9500
Available Static	0 - 1.0	0 - 1.0	0 - 1.0	0 - 1.0
Condenser Fan Size	110-10R	110-10R	150-12R	150-15R
Number of Condenser Fans	2	2	2	2
Standard Speed Range (Rpm)	656 - 875	712 - 949	712 - 949	764 - 1011
Max. Allowable Rpm	1700	1700	1700	1600
Belt (Type)	BX66	BX65	BX75	BX77
Fan Pulley (Type)	BK70	BK65	BK90	BK100
Motor Pulley (Type)	1VP34	1VP34	1VP34	1VP34
Std Hp	1	1.5	2	2
Hp Range	1 - 1.5	1.5 - 2	2 - 3	2 - 3
Fan Shaft Size (in.)	1	1	1	1.1875
Motor Shaft Size (in.)	0.875	0.875	0.875	0.875
Center Distance (in.)	27.1	27.1	29.8	29.8
CONDENSER COIL	$^3/_8$-in. OD, Enhanced Copper Tube, Aluminum Fins			
Quantity Rows ... Fin/in.	6...16W	6...16W	6...16W	6...16W
Fin Block Size (H x L) (in.)	30 x 46	30 x 46	32 x 60	34 x 80
Face Area (sq ft)	9.58	9.58	13.33	18.89
HIGH-PRESSURE SWITCH	Opens at 595 ± 10 psig; Closes at 443 ± 15 psig			
LOW-PRESSURE SWITCH	Opens at 53 ± 5 psig; Closes at 80 ± 7 psig			
CONDENSATE DRAIN LINE (in.)	1 at $^3/_4$ MPT (Male Pipe Thread)			

LEGEND

MPT — Male Pipe Thread

Step 2 — Rig and Place Unit — Units are mounted on pallets. Leave the unit on the pallet until it is in the final position. While on the pallet, the unit can be rolled, dragged or forklifted; *do not apply force to the unit.* Use a minimum of 3 rollers when rolling, and raise from above to remove the pallet when unit is in the final position. See Fig. 6 for rigging details.

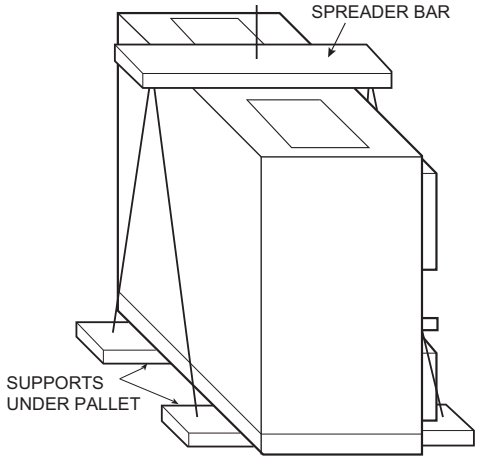

Fig. 6 — 50XCA Unit Rigging

PLACING THE UNIT — The selected unit location should not be adjacent to an acoustically sensitive space. The best locations for these units are mechanical rooms, near elevator shafts, near restrooms, near stairwells or other similar locations. Position the unit where large supply of outdoor air is available for the unit inlet. Be sure to leave enough space for the return air inlet access to the evaporator and condenser coils for cleaning and maintenance. Units located on the same floor should have a minimum of 6 ft of clearance between condenser air openings. Units located floor-to-floor should have a minimum of 10 ft between units to prevent recirculation of conditioned air. DO NOT locate units where they will recirculate condenser air. This will cause increased head pressure which can cause units to trip on high pressure. See Fig. 7 for recommended unit clearances.

Either provide inlet filters to protect the coils, or locate the unit in an area free from airborne dirt or other foreign material which could clog the coils.

The units are designed to pass through most door openings. The filter rack may also be removed for additional clearance.

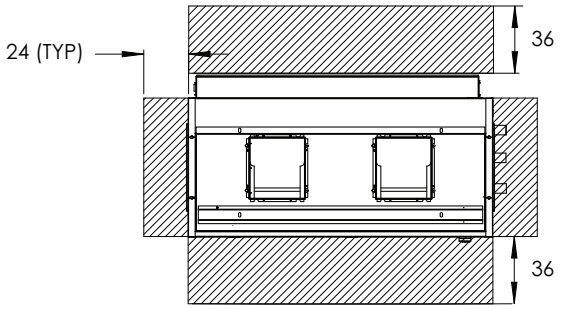

NOTE: Dimensions are in inches.

Fig. 7 — Unit Clearances

Step 3 — Install Additional Vibration Isolation (if Required) — Unit compressors are internally isolated and the compressor compartment is lined with acoustical insulation. If additional vibration isolation is desired, rubber pads may be located under each unit corner or unit may be mounted on rubber shear isolators. Contact Carrier for application assistance. Spring isolators are not normally required. Ductwork attached to the unit should be isolated from the unit with a flexible collar on the inlet and outlet ducts.

Step 4 — Install Ductwork — The 50XCA unit is designed for use either with or without ductwork. If no ductwork is used, ensure that customer supplied wire fan guards are installed on condenser outlet to prevent injury. If either ductwork or no ductwork is used, care must be taken to eliminate air recirculation. Recirculation can be minimized by discharging through an extension elbow. When properly designed, single or double deflection discharge louvers can be applied to ductwork and to the unit air discharge. Fixed rain louvers over discharge outlets can cause excessive recirculation and nuisance high-pressure switch cutouts. Obstructions closer than 10 ft to the discharge air pattern can also cause significant recirculation.

NOTE: See Fig. 8 for recommended duct sizing

CONDENSER AIR DUCT — The condenser supply and discharge air duct should be as short and straight as possible. The cross section area of the duct should be equal to the face area of the unit openings. Ductwork should be insulated to prevent moisture condensation on the unit panels during cold weather. (See Fig. 9.) Condenser discharge ducts for units with multiple blowers should consist of a "pair of pants" and constructed in accordance with the System Design Manual and ASHRAE guidelines. (See Fig. 10.) Settling media may be required for uniform flow.

CONDENSER AIRFLOW LOUVERS — Separate inlet and discharge louvers are recommended (see Fig. 8) to avoid air recirculation. A baffle may also be used on the outside of the building to direct discharge away from the air inlet. See Fig. 8 for recommended dimensions.

EVAPORATOR DUCTWORK — The units should use a "pair of pants" configuration as shown in Fig. 10. Refer to the Carrier System Design Manual or ASHRAE (American Society of Heating, Refrigerating and Air-Conditioning Engineers) standards for the recommended duct connection to unit with 2 or more fans.

A flexible canvas duct connector is recommended on both supply and return air sides of the units to be connected to the system ductwork.

All metal ductwork should be adequately insulated to avoid heat loss or gain and to prevent condensation from forming on the duct walls. Uninsulated ductwork is not recommended, as the unit's performance will be adversely affected.

Do not connect discharge ducts directly to the blower(s). The factory filter should be left in place on a free return system.

If the unit will be installed in a new installation, the duct system should be designed in accordance with the System Design Manual, Part 2 and with ASHRAE procedures for duct sizing. If the unit will be connected to an existing duct system, check that the existing duct system has the capacity to handle the required airflow for the unit application at an acceptable system static pressure. If the existing duct system is too small, larger ductwork must be installed.

Units with two fans or more should have a properly designed "pair of pants" duct connection. (See Fig. 10.) Settling media may be required for uniform flow.

NOTE: Units with two or more fans should not be ducted separately.

An adequate straight length of ducting from the unit should be allowed before elbows are installed. See table below for recommended straight length.

50XCA UNIT	LENGTH (in.)
06,08	36.5
12,14	36.7

Elbows should turn in the direction of fan rotation, if possible. Abrupt turns will generate air turbulence, and excessive noise. Turning vanes should be used in all short radius bends. Ensure that ducting does not obstruct access to the unit for routine servicing.

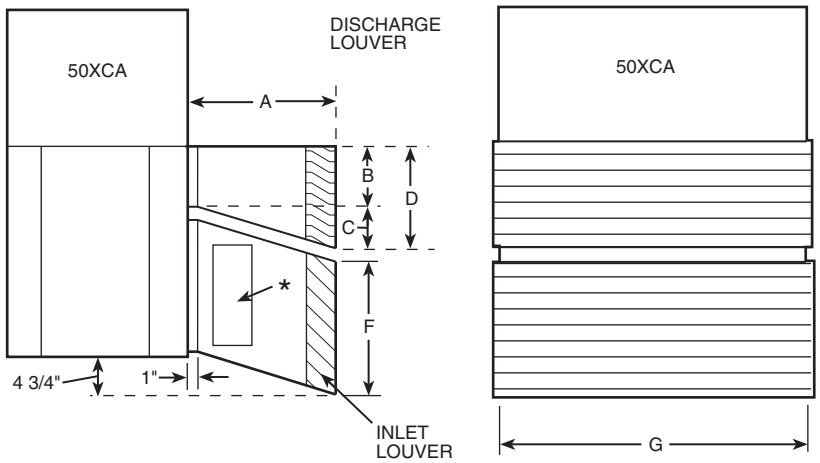

DIMENSIONS (in.)

UNIT 50XCA	A	B	C	D	F	G
06	41 1/2	12 3/4	4	16 3/4	29 3/8	46
08	41 1/2	12 3/4	4	16 3/4	29 3/8	46
12	50 1/2	16 1/4	4	20 1/4	32 3/4	60
14	53 3/4	16 1/4	4	20 1/4	32 3/4	80

*Access panel for condenser coil cleaning.

INLET LOUVER DETAILDISCHARGE LOUVER DETAIL

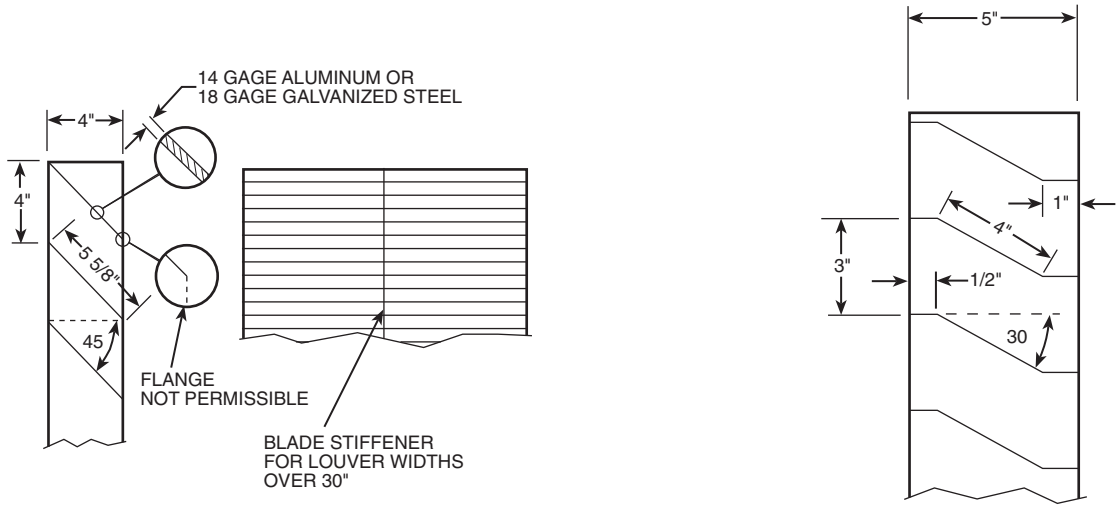

DEFLECTOR DETAIL

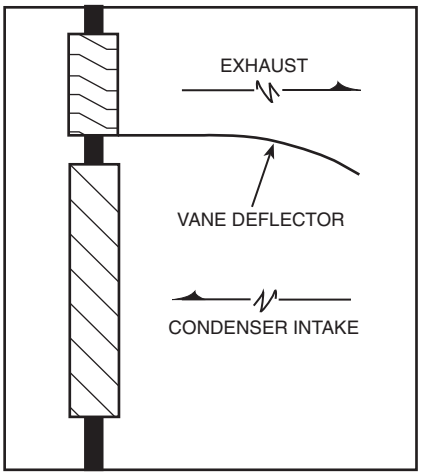

Fig. 8 — Typical Recommended Condenser Duct Dimensions

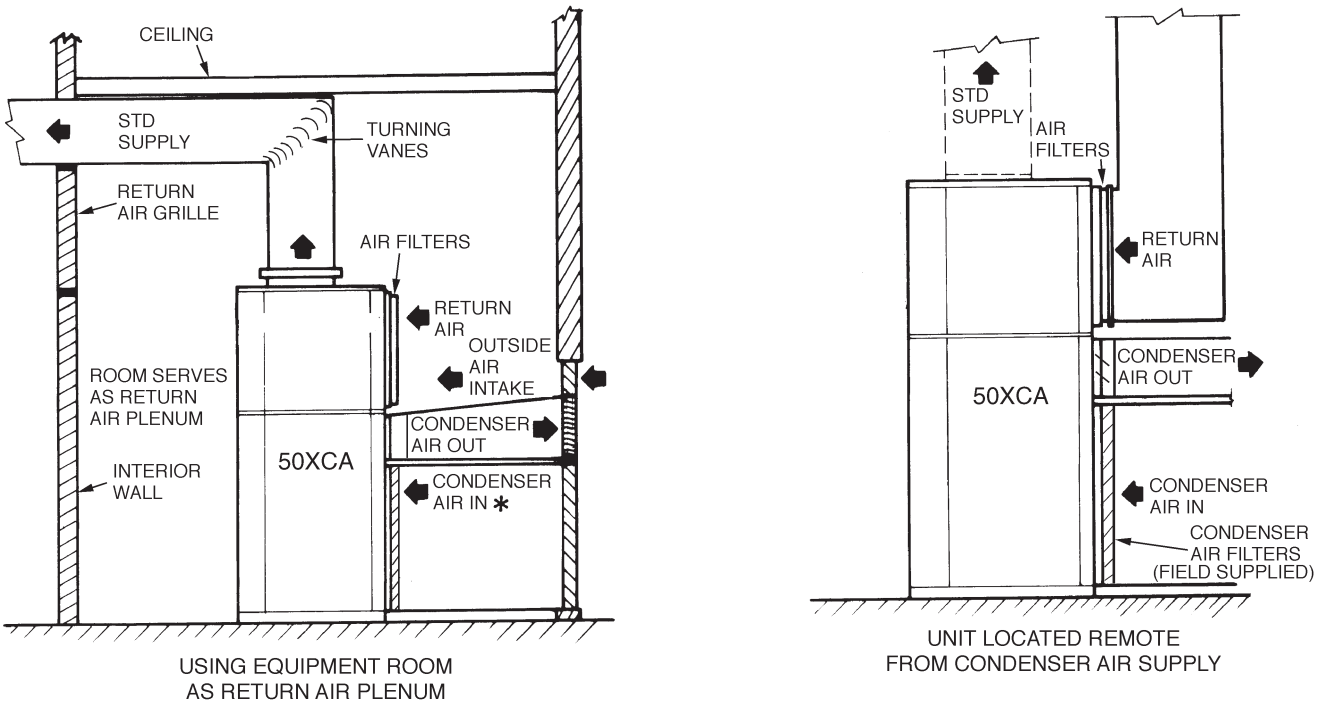

*Provide access for cleaning condenser coil.

Fig. 9 — 50XCA Installation Options

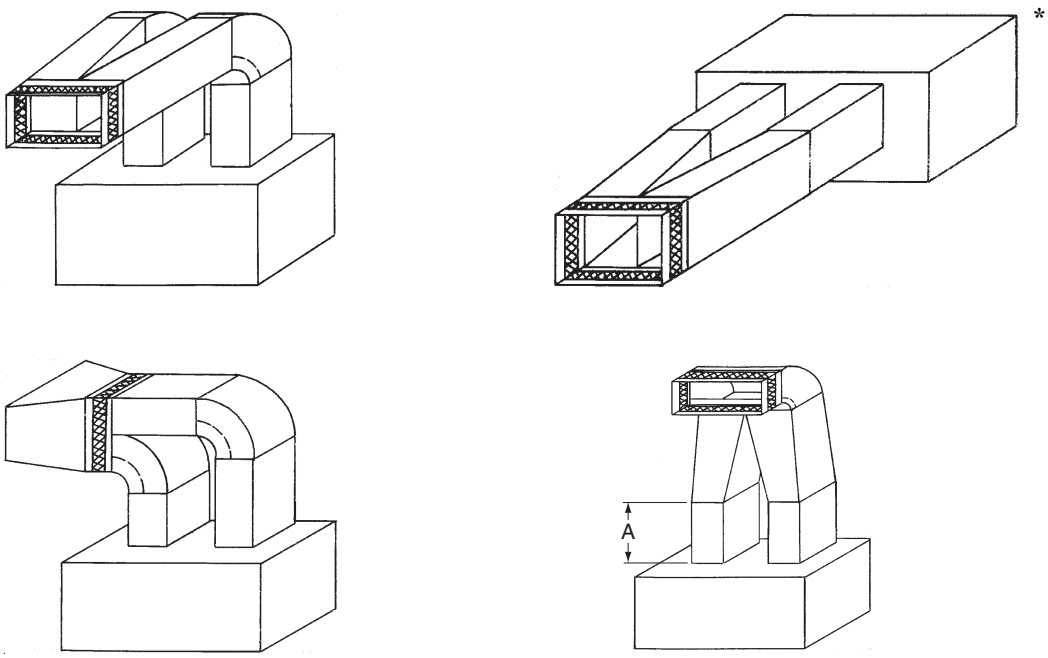

NOTE: A = min. straight duct length

* Preferred for condenser discharge ductwork.

Fig. 10 — Typical Fan Discharge Connections for Multiple Fan Units

Step 5 — Install Condensate Drain Line — The 50XCA unit has a drain connection for evaporator condensate. When connecting condensate drains from the unit to floor drains, sinks, or hoppers, connect drains downstream of trap to ensure that condensate does not drain back into the unit.

> IMPORTANT: NEVER use pipe smaller than 3/4 inches in the drain run.

Pitch drain pipe downward at a slope of at least 1/4-in. per ft for proper drainage. Provide tees plugged on one side for clean-outs. Leave clearance for servicing, and observe all local sanitary codes. The condensate trap should have a depth adequate to allow 3-in. of water in the trap with the unit running. See Fig. 11.

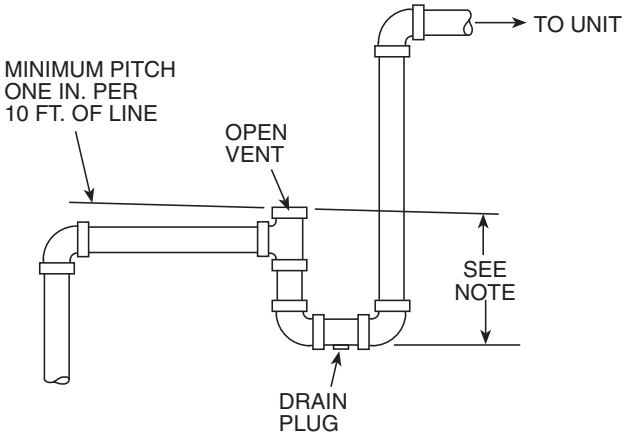

NOTE: Trap should be deep enough to offset maximum unit static difference. A 4-in. trap is recommended.

Fig. 11 — External Trap Condensate Drain

Step 6 — Complete Electrical Connections

GENERAL — Verify that nameplate electrical requirements match available power supply. See Tables 2 and 3. Voltage at condenser must be within the minimum and maximum shown in Table 2 and phases must be balanced within 2%. Contact local power company for line voltage corrections. Never operate a motor where a phase imbalance in supply voltage is greater than 2%.

Use the following formula to determine the percentage of voltage imbalance:

UNBALANCED 3-PHASE SUPPLY VOLTAGE —

Use the following formula to determine the percent of voltage imbalance.

Percent Voltage Imbalance

$$= 100 \times \frac{\text{max voltage deviation from average voltage}}{\text{average voltage}}$$

Example: Supply voltage is 460-3-60.

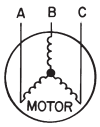

AB = 452 v
BC = 464 v
AC = 455 v

$$\text{Average Voltage} = \frac{452 + 464 + 455}{3} = \frac{1371}{3} = 457$$

Determine maximum deviation from average voltage:

(AB) 457 – 452 = 5 v
(BC) 464 – 457 = 7 v
(AC) 457 – 455 = 2 v

Maximum deviation is 7 v.

Determine percent of voltage imbalance:

$$\% \text{ Voltage Imbalance} = 100 \times \frac{7}{457} = 1.53\%$$

This amount of phase imbalance is satisfactory as it is below the maximum allowable 2%.

> IMPORTANT: If supply voltage phase imbalance is more than 2%, contact your local electric utility company immediately.

Unit operation on improper line voltage or excessive phase imbalance may be considered abuse and any resulting damage may not be covered by Carrier warranty.

All wiring must be in accordance with local or NEC (National Electrical Code) regulations.

POWER WIRING — The units must have adequate overcurrent protection, fuses, or HACR (Heating, Air Conditioning and Refrigeration) breakers, according to the national and applicable local codes.

For field power connections, all main power wiring enters the unit through a factory-punched access hole on the side of the control box. Attach power wires to the power connections on the main power terminal block in the unit control box. Be sure to install a ground wire.

CONTROL WIRING — All units require an accessory thermostat package to complete the unit control system. For a room-mounted thermostat, the thermostat may be mounted in an appropriate location in the conditioned space. Never locate the thermostat in direct path of air discharge. Route the wires from the thermostat to the low voltage connection of the control box. Connect wires to the low voltage terminal block. See Fig. 12. The fan switch on the thermostat will control fan operations.

WINTER START MODIFICATIONS — When starting air-cooled units under low-ambient temperature conditions, the compressor may pull suction pressure down below the low-pressure cutout switch setting causing the compressor to shut off. At extremely low temperatures, the low-pressure switch may open during the off cycle, preventing the compressor from starting. The use of the winter start kit is recommended. This kit bypasses the low-pressure switch on start-up for 90 seconds.

Table 2 — Electrical Data

UNIT 50XCA	V-PH-Hz	VOLTAGE RANGE		COMPRESSOR NO. 1		COMPRESSOR NO. 2	
		Min	Max	RLA	LRA	RLA	LRA
06	208/230-3-60	187	253	20.5	155	—	—
	460-3-60	414	506	9.6	75	—	—
	575-3-60	518	632	7.6	54	—	—
08	208/230-3-60	187	253	22.4	149	—	—
	460-3-60	414	506	10.6	75	—	—
	575-3-60	518	632	7.7	54	—	—
12	208/230-3-60	187	253	15.6	110	15.9	110
	460-3-60	414	506	7.8	52	7.1	52
	575-3-60	518	632	5.8	39	5.1	39
14	208/230-3-60	187	253	19.6	136	19.2	136
	460-3-60	414	506	8.2	66	8.7	66
	575-3-60	518	632	6.6	55	6.9	55

LEGEND

LRA — Locked Rotor Amps
NEC — National Electrical Code
RLA — Rated Load Amps

NOTES:
1. In compliance with NEC requirements for multimotor and combination load equipment (NEC Articles 430 and 440), the overcurrent protective device for the unit shall be fuse or HACR circuit breaker. Canadian units may be fuse or circuit breaker.
2. Wire sizing amps are a sum of 125% of the compressor RLA plus 100% of indoor fan motor FLA.
3. Motors are protected against primary single phasing condition.
4. Indoor-fan motors are 3-phase motors of same voltage as unit.

Table 3 — Fan Electrical Data

MOTOR CODE	MOTOR HP	V-PH-Hz	VOLTAGE RANGE		FLA
			Min	Max	
B	0.50	208/230-3-60	187	253	1.8/2.2
		460-3-60	414	506	1.1
		575-3-60	518	632	0.9
C	0.75	208/230-3-60	187	253	2.5/2.6
		460-3-60	414	506	1.3
		575-3-60	518	632	1.0
D	1.00	208/230-3-60	187	253	3.2/3.2
		460-3-60	414	506	1.6
		575-3-60	518	632	1.1
E	1.50	208/230-3-60	187	253	4.6/4.8
		460-3-60	414	506	2.4
		575-3-60	518	632	1.6
F	2.00	208/230-3-60	187	253	6.0/5.8
		460-3-60	414	506	2.9
		575-3-60	518	632	2.1

LEGEND

FLA — Full Load Amps

NOTE: The FLA data listed in this table is for one fan only. When calculating system FLA, evaporator fan and condenser fan must be included.

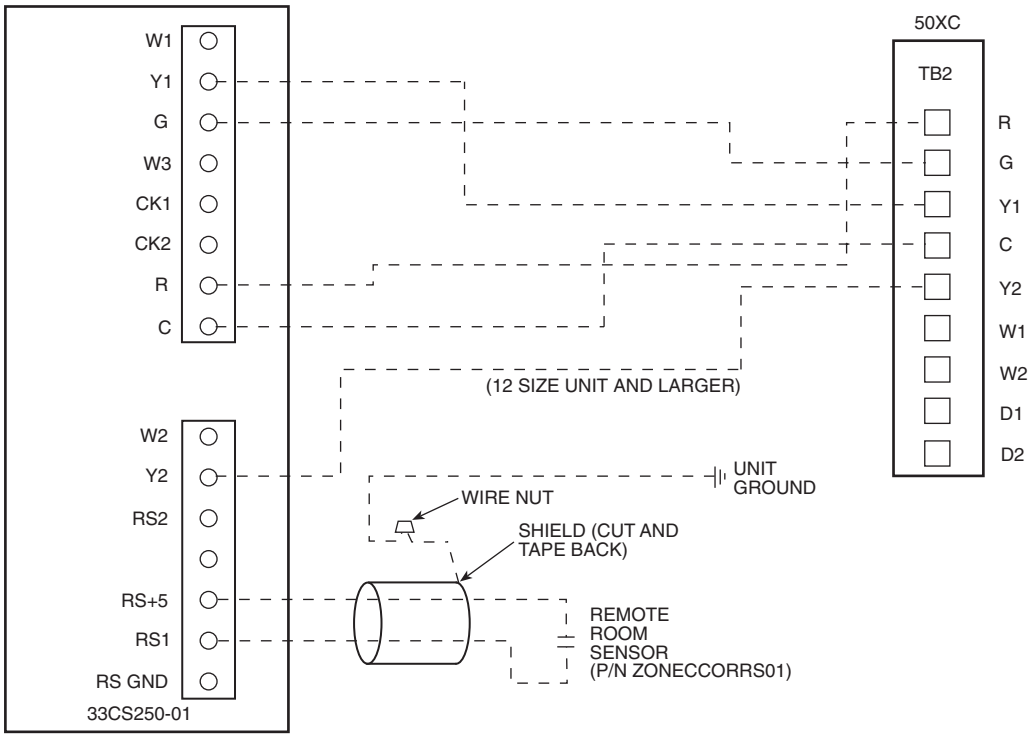

NOTE: Remote sensor is field-installed option.

Fig. 12 — Typical Thermostat Wiring Connections

Step 7 — Install Plenums (if Required) — The installation of 50XC plenums is applicable to all vertical discharge 50XC units.

> IMPORTANT: Lockout and tagout all power supplies to equipment and controls prior to servicing unit. Follow all safety codes, including working at safe heights.

The following tools are required:

- $^{5}/_{16}$-in. nut driver
- adequate lifting device
- utility knife
- safety glasses
- work gloves

Install as follows:

1. Apply $^{3}/_{4}$-in. wide by $^{1}/_{4}$-in. thick gasket tape supplied with unit to the bottom of mounting angles located on all four sides of the plenum. Ensure edge of gasket is even with inside edge of plenum walls and that there are no gaps in between insulation strips. See Fig. 13.
2. Using appropriate lifting device, lift plenum and place on top of 50XCA unit. Center plenum across both the width and depth directions.
3. Using a $^{5}/_{16}$-in. nut driver, secure plenum mounting angles to 50XCA unit using 3 no. 10 $^{5}/_{8}$-in. long screws provided with plenum. Install 3 screws along each plenum side and 5 screws along plenum front and rear mounting angles.
4. Adjust four-way deflection vanes as needed to ensure adequate airflow distribution.

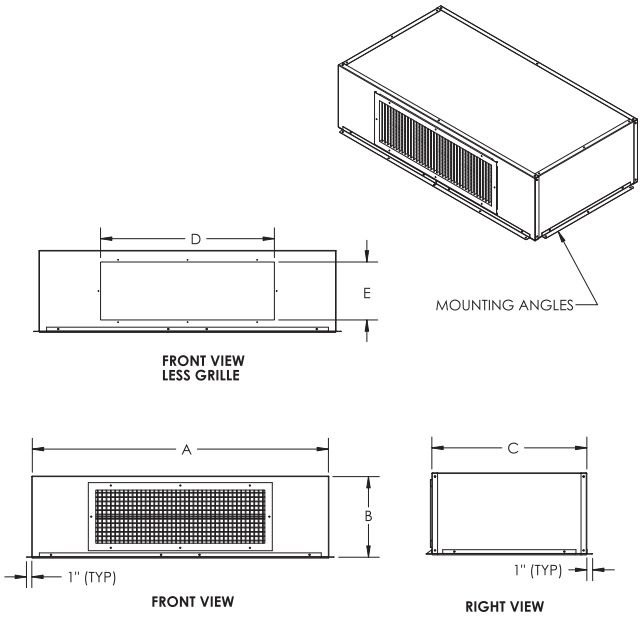

MODEL	UNIT SIZE	A	B	C	D	E	WGT (lb)
50XCA900-200A00	06	51.3	14.0	26.8	30.0	10.0	65
50XCA900-201A00	08	51.3	14.0	26.8	45.0	10.0	65
50XCA900-202A00	12	66.0	14.0	28.9	60.0	10.0	80
50XCA900-203A00	14	86.0	19.0	28.9	48.0	15.0	115

NOTE: Dimensions in inches.

Fig. 13 — 50XC Plenum Unit

Step 8 — Check Fan Sheave and Belt Alignment — Factory-supplied drives are pre-aligned and tensioned, however, Carrier recommends checking the belt tension and alignment before starting the unit. Always check the drive alignment after adjusting belt tension.

To install sheaves on the fan or motor shaft, remove any rust-preventive coating on the shaft. Make sure the shaft is clean and free of burrs. Add grease or lubricant to bore of sheave before installing. Mount sheave on the shaft; to prevent bearing damage, do not use excessive force (i.e., a hammer). Place sheaves for minimum overhang (see Fig. 14).

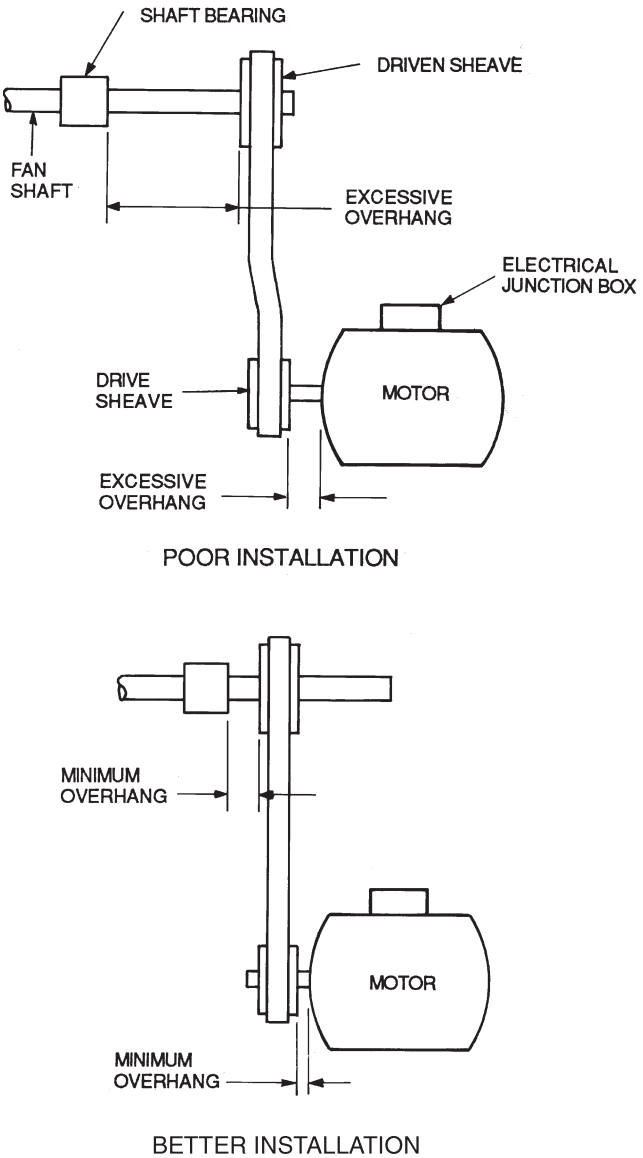

Fig. 14 — Determining Sheave-Shaft Overhang

Each factory-assembled fan, shaft, and drive sheave assembly is precision aligned and balanced. If excessive unit vibration occurs after field replacement of sheaves, the unit should be rebalanced. To change the drive ratio, reselect and replace the motor sheave, not the fan sheave.

After 24 hours of unit operation, the drive belts may stretch. Check the belt tension after 24 hours of operation and adjust if necessary. Periodically check belt tension throughout the run-in period, which is normally the initial 72 hours of operation.

ALIGNMENT — Make sure that fan shafts and motor shafts are parallel and level. The most common causes of misalignment are nonparallel shafts and improperly located sheaves. Where shafts are not parallel, belts on one side are drawn tighter and pull more than their share of the load. As a result, these belts wear out faster, requiring the entire set to be replaced before it has given maximum service. If misalignment is in the sheave, belts enter and leave the grooves at an angle, causing excessive belt and sheave wear.

1. Shaft alignment can be checked by measuring the distance between the shafts at 3 or more locations. If the distances are equal, then the shafts are parallel.
2. Sheave Alignment:

   Fixed sheaves — To check the location of the fixed sheaves on the shafts, a straightedge or a piece of string can be used. If the sheaves are properly aligned, the string will touch them at the points indicated by the arrows in Fig. 15.

   Adjustable sheaves — To check the location of adjustable sheave on shaft, make sure that the centerlines of both sheaves are in line and parallel with the bearing support channel. See Fig. 15. Adjustable pitch drives are installed on the motor shaft. Carrier recommends that adjustable sheaves should only be used for initial balancing and be replaced with fixed pitch sheaves by the air balancer prior to the final system air balance.

⚠ CAUTION

Do not exceed maximum fan speed rpm with adjustable sheave or unit damage could occur.

3. Rotate each sheave one-half revolution to determine whether the sheave is wobbly or the drive shaft is bent. Correct any misalignment.
4. With sheaves aligned, tighten cap screws evenly and progressively.

NOTE: There should be a $^1/_8$-in. to $^1/_4$-in. gap between the mating part hub and the bushing flange. If gap is closed, the bushing is probably the wrong size.

5. With taper-lock bushed hubs, be sure the bushing bolts are tightened evenly to prevent side-to-side pulley wobble. Check by rotating sheaves and rechecking sheave alignment. When substituting field-supplied sheaves for factory-supplied sheaves, consider that fan shaft sheave has been factory balanced with fan and shaft as an assembly. For this reason, substitution of motor sheave is preferable for final speed adjustment.

V-BELTS — When installing or replacing belts, always use a complete set of new belts. Mixing old and new belts will result in the premature wear or breakage of the newer belts.

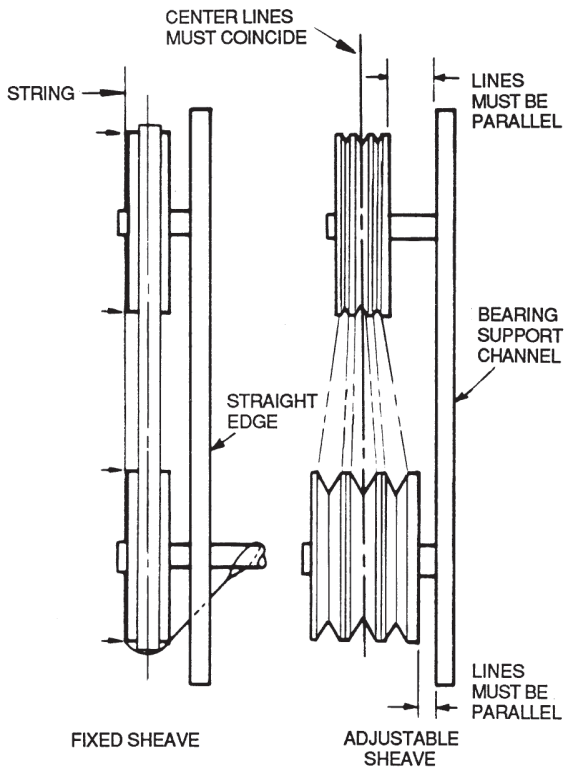

Fig. 15 — Determining Sheave-Shaft Alignment

Refer to label on inside of fan access door for information on factory-supplied drive.

1. Always adjust the motor position so that V-belts can be installed without stretching over grooves. Forcing belts can result in uneven stretching and a mismatched set of belts.
2. **Do not allow belt to bottom out in sheave.**
3. Tighten belts by turning motor-adjusting jackscrews. Turn each jackscrew an equal number of turns.
4. Equalize belt slack so that it is on the same side of belt for all belts. Failure to do so may result in uneven belt stretching.
5. Tension new drives at the maximum deflection force recommended (Fig. 16).

On current production, the correct tension information is listed on the fan drive label. For older equipment or for units with field-modified drives, use the deflection formula given in the following example and the tension data from Fig. 16.

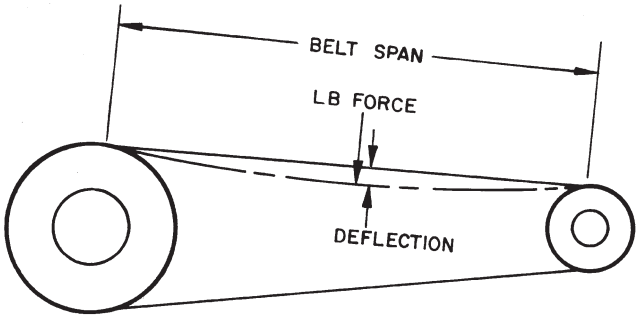

BELT CROSS SECTION	SMALL SHEAVE PD RANGE (in.)	DEFLECTION FORCE (lb)					
		Super Belts		Notch Belts		Steel Cable Belts	
		Min	Max	Min	Max	Min	Max
A	3.0- 3.6	3	$4^1/_4$	$3^7/_8$	$5^1/_2$	$3^1/_4$	4
	3.8- 4.8	$3^1/_2$	5	$4^1/_2$	$6^1/_4$	$3^3/_4$	$4^3/_4$
	5.0- 7.0	4	$5^1/_2$	5	$6^7/_8$	$4^1/_4$	$5^1/_4$
B	3.4- 4.2	4	$5^1/_2$	$5^3/_4$	8	$4^1/_2$	$5^1/_2$
	4.4- 5.6	$5^1/_8$	$7^1/_8$	$6^1/_2$	$9^1/_8$	$5^3/_4$	$7^1/_4$
	5.8- 8.6	$6^3/_8$	$8^3/_4$	$7^3/_8$	$10^1/_8$	7	$8^3/_4$
C	7.0- 9.4	$11^1/_4$	$14^3/_8$	$13^3/_4$	$17^7/_8$	$11^1/_4$	14
	9.6-16.0	$14^1/_8$	$18^1/_2$	$15^1/_4$	$20^1/_4$	$14^1/_4$	$17^3/_4$
5V	4.4- 6.7	—	—	10	15	—	—
	7.1-10.9	$10^1/_2$	$15^3/_4$	$12^7/_8$	$18^3/_4$	—	—
	11.8-16.0	13	$19^1/_2$	15	22	—	—
8V	12.5-17.0	27	$40^1/_2$	—	—	—	—
	18.0-22.4	30	45	—	—	—	—

LEGEND
PD — Pitch Diameter, inches

Fig. 16 — Fan Belt Tension Data

EXAMPLE:

Given:

Belt Span 16 in.

Belt Cross-Section A, Super Belt

Small Sheave PD 5 in.

Deflection = Belt Span/64

Solution:

a. From Fig. 16 find that deflection force for type A, super belt with 5-in. small sheave PD is 4 to $5^1/_2$ lb.

b. Deflection $= {}^{16}/_{64}$
$= {}^1/_4$-in.

c. Increase or decrease belt tension until force required for $^1/_4$-in. deflection is 5 lb.

Check belt tension at least twice during first operating day. Readjust as required to maintain belt tension within the recommended range.

With correct belt tension, belts may slip and squeal momentarily on start-up. This slippage is normal and disappears after unit reaches operating speed. Excessive belt tension shortens belt life and may cause bearing and shaft damage.

After run-in, set belt tension at lowest tension at which belts will not slip during operation.

START-UP

⚠ CAUTION

To prevent injury, ensure that ducting or wire fan guards are installed on the condenser fan before starting the unit.

General — Complete the start-up checklist on pages CL-1 and CL-2 before attempting system start-up.

1. Set indoor thermostat system switch to OFF position and fan switch to AUTO position.
2. Check all electrical connections, fuses, starter and pressure control resets.
3. Check operation of evaporator fan motor and ensure fan rotation is correct. If rotation needs to be reversed, disconnect main power and switch any 2 leads on the load side of the disconnect switch.
4. Adjust fan speed. Units are belt-driven and allow for a wide range of static and airflow requirements. It may be necessary to adjust the condenser airflow to account for these inlet conditions. Inadequate airflow will result in poor unit performance and possible nuisance tripping of high-pressure switches. If an airflow is not specified, use the nominal airflow from Tables 4-11 and adjust fan speed to compensate for actual job conditions. Use Table 1 to determine proper fan speed. If the unit trips on high pressure due to high condensing temperature it may be necessary to increase the fan speed and condenser airflow.
5. The outdoor-air fans cycle with the compressor Be sure fans are running during compressor operation.

Table 4 — Condenser Fan Performance — 50XCA06 Units

CFM	ESP (in. wg)											
	0.00		0.10		0.20		0.30		0.40		0.50	
	Rpm	Bhp	Rpm	Bhp	Rpm	Bhp	Rpm	Bhp	Rpm	Bhp	Rpm	Bhp
1800	594	0.19	594	0.19	594	0.19	676	0.25	755	0.33	828	0.42
1900	588	0.19	588	0.19	598	0.20	686	0.27	764	0.35	836	0.44
2000	582	0.19	582	0.19	610	0.21	696	0.29	773	0.37	844	0.46
2100	576	0.19	576	0.19	623	0.23	707	0.31	783	0.40	852	0.49
2200	570	0.20	570	0.20	636	0.25	718	0.33	793	0.42	861	0.51
2300	564	0.20	564	0.20	649	0.27	730	0.36	803	0.44	870	0.54
2400	558	0.20	573	0.22	662	0.29	742	0.38	814	0.47	880	0.57
2500	552	0.21	589	0.24	676	0.32	754	0.41	825	0.50	890	0.60
2600	546	0.21	605	0.26	690	0.34	766	0.43	836	0.53	901	0.63
2600	540	0.21	622	0.28	704	0.37	779	0.46	848	0.56	911	0.66
2800	550	0.23	638	0.31	719	0.40	792	0.49	860	0.59	923	0.70
2900	570	0.26	655	0.34	734	0.43	806	0.53	872	0.63	934	0.74
3000	590	0.29	672	0.37	749	0.46	819	0.56	885	0.67	946	0.78

CFM	ESP (in. wg)											
	0.60		0.70		0.80		0.90		1.00		1.10	
	Rpm	Bhp	Rpm	Bhp	Rpm	Bhp	Rpm	Bhp	Rpm	Bhp	Rpm	Bhp
1800	896	0.51	960	0.61	1020	0.72	—	—	—	—	—	—
1900	902	0.54	965	0.64	1025	0.74	1082	0.86	—	—	—	—
2000	909	0.56	971	0.66	1030	0.77	1086	0.88	1140	1.00	—	—
2100	917	0.58	978	0.69	1036	0.80	1091	0.91	1145	1.03	1196	1.16
2200	925	0.61	985	0.72	1042	0.83	1097	0.94	1150	1.06	1201	1.19
2300	933	0.64	993	0.75	1049	0.86	1103	0.98	1155	1.10	1206	1.22
2400	942	0.67	1001	0.78	1057	0.89	1110	1.01	1162	1.13	1211	1.26
2500	951	0.70	1009	0.81	1065	0.93	1117	1.05	1168	1.17	1217	1.30
2600	961	0.74	1018	0.85	1073	0.96	1125	1.09	1175	1.21	1224	1.34
2700	971	0.77	1028	0.89	1081	1.00	1133	1.13	1183	1.25	1231	1.39
2800	982	0.81	1037	0.93	1090	1.05	1141	1.17	1191	1.30	1238	1.43
2900	992	0.85	1047	0.97	1100	1.09	1150	1.21	1199	1.34	1246	1.48
3000	1003	0.89	1058	1.01	1110	1.13	1159	1.26	1207	1.39	—	—

LEGEND

Bhp — Brake Horsepower
ESP — External Static Pressure

NOTES:
1. Units are available with several motor hp options. Refer to Table 1.
2. Static pressure losses for any options or accessories must be applied to external static pressure before entering the fan performance table.
3. Interpolation is permitted; extrapolation is not.
4. Fan performance is based on unit casing, and dry DX (direct expansion) coil losses at sea level.

Table 5 — Condenser Fan Performance — 50XCA08 Units

CFM	ESP (in. wg)															
	0.00		0.10		0.20		0.30		0.40		0.50		0.60		0.70	
	Rpm	Bhp	Rpm	Bhp	Rpm	Bhp	Rpm	Bhp	Rpm	Bhp	Rpm	Bhp	Rpm	Bhp	Rpm	Bhp
2500	594	0.25	594	0.25	662	0.32	738	0.41	807	0.50	872	0.60	932	0.70	988	0.81
2650	588	0.26	600	0.27	682	0.36	757	0.45	824	0.55	887	0.65	946	0.75	1001	0.87
2800	582	0.27	625	0.31	704	0.40	776	0.49	842	0.59	903	0.70	961	0.81	1016	0.93
2950	576	0.28	650	0.35	726	0.45	795	0.54	860	0.65	920	0.76	977	0.87	1030	0.99
3100	597	0.31	675	0.40	748	0.50	816	0.60	879	0.71	938	0.82	993	0.94	1046	1.06
3250	625	0.36	700	0.45	771	0.55	836	0.66	898	0.77	956	0.88	1010	1.00	1062	1.13
3400	654	0.42	726	0.51	794	0.61	858	0.72	918	0.83	974	0.95	1027	1.08	1078	1.21
3550	683	0.47	752	0.57	818	0.68	879	0.79	938	0.91	993	1.03	1045	1.16	1095	1.29
3700	712	0.54	778	0.64	842	0.75	901	0.86	958	0.98	1012	1.11	1064	1.24	1113	1.37
3850	741	0.60	805	0.71	866	0.82	924	0.94	979	1.06	1032	1.19	1083	1.33	1131	1.47
4000	770	0.68	831	0.79	890	0.90	947	1.02	1001	1.15	1053	1.29	1102	1.42	1150	1.56
4150	799	0.75	858	0.87	915	0.99	970	1.11	1023	1.25	1073	1.38	1122	1.52	1168	1.67
4300	828	0.84	885	0.96	940	1.08	994	1.21	1045	1.34	1094	1.49	1142	1.63	1188	1.78
4450	856	0.93	912	1.05	966	1.18	1017	1.31	1068	1.45	1116	1.59	1162	1.74	1207	1.89
4600	885	1.03	939	1.15	991	1.28	1042	1.42	1090	1.56	1138	1.71	1183	1.86	—	—

CFM	ESP (in. wg)													
	0.80		0.90		1.00		1.10		1.20		1.30		1.40	
	Rpm	Bhp	Rpm	Bhp	Rpm	Bhp	Rpm	Bhp	Rpm	Bhp	Rpm	Bhp	Rpm	Bhp
2500	1042	0.93	1094	1.05	1144	1.17	1192	1.30	1238	1.43	1283	1.57	1327	1.72
2650	1055	0.98	1105	1.11	1154	1.23	1201	1.36	1247	1.50	1291	1.64	1334	1.78
2800	1068	1.05	1117	1.17	1166	1.30	1212	1.43	1257	1.57	1301	1.71	1343	1.86
2950	1081	1.11	1131	1.24	1178	1.37	1224	1.50	1268	1.64	1311	1.79	1353	1.94
3100	1096	1.18	1144	1.31	1191	1.44	1236	1.58	1279	1.72	1322	1.87	—	—
3250	1111	1.26	1159	1.39	1205	1.53	1249	1.67	1292	1.81	1334	1.96	—	—
3400	1127	1.34	1174	1.47	1219	1.61	1263	1.75	1305	1.90	—	—	—	—
3550	1143	1.42	1189	1.56	1234	1.70	1277	1.85	1319	2.00	—	—	—	—
3700	1160	1.51	1206	1.65	1249	1.80	1292	1.95	—	—	—	—	—	—
3850	1178	1.61	1222	1.75	1265	1.90	—	—	—	—	—	—	—	—
4000	1195	1.71	1239	1.86	—	—	—	—	—	—	—	—	—	—
4150	1213	1.82	1257	1.97	—	—	—	—	—	—	—	—	—	—
4300	1232	1.93	—	—	—	—	—	—	—	—	—	—	—	—
4450	—	—	—	—	—	—	—	—	—	—	—	—	—	—
4600	—	—	—	—	—	—	—	—	—	—	—	—	—	—

LEGEND

Bhp — Brake Horsepower
ESP — External Static Pressure

NOTES:
1. Units are available with several motor hp options. Refer to Table 1.
2. Static pressure losses for any options or accessories must be applied to external static pressure before entering the fan performance table.
3. Interpolation is permitted; extrapolation is not.
4. Fan performance is based on unit casing, and dry DX (direct expansion) coil losses at sea level.

Table 6 — Condenser Fan Performance — 50XCA12 Units

CFM	ESP (in. wg)															
	0.00		0.10		0.20		0.30		0.40		0.50		0.60		0.70	
	Rpm	Bhp	Rpm	Bhp	Rpm	Bhp	Rpm	Bhp	Rpm	Bhp	Rpm	Bhp	Rpm	Bhp	Rpm	Bhp
4100	389	0.41	451	0.53	506	0.66	557	0.80	605	0.94	651	1.10	695	1.26	737	1.43
4300	408	0.47	467	0.60	520	0.73	569	0.87	616	1.02	661	1.18	704	1.35	745	1.53
4500	427	0.54	484	0.67	535	0.81	583	0.96	628	1.11	672	1.28	714	1.45	754	1.63
4700	446	0.62	501	0.76	550	0.90	596	1.05	641	1.21	683	1.37	724	1.55	763	1.73
4900	465	0.70	518	0.84	566	0.99	611	1.15	653	1.31	694	1.48	734	1.66	773	1.85
5100	484	0.79	535	0.94	581	1.09	625	1.25	666	1.42	706	1.59	745	1.78	783	1.97
5300	503	0.88	552	1.04	597	1.20	640	1.37	680	1.54	719	1.72	757	1.90	793	2.10
5500	522	0.99	569	1.15	613	1.32	654	1.49	694	1.66	732	1.85	769	2.04	804	2.23
5700	541	1.10	587	1.27	629	1.44	670	1.62	708	1.80	745	1.98	781	2.18	816	2.38
5900	560	1.22	604	1.39	646	1.57	685	1.75	722	1.94	758	2.13	794	2.33	828	2.53
6100	578	1.35	622	1.53	662	1.71	700	1.90	737	2.09	772	2.29	807	2.49	840	2.70
6300	597	1.48	639	1.67	679	1.86	716	2.05	752	2.25	786	2.45	820	2.66	852	2.87
6500	616	1.63	657	1.82	696	2.02	732	2.21	767	2.42	801	2.62	833	2.83	—	—
6700	635	1.78	675	1.98	712	2.18	748	2.39	782	2.59	815	2.81	—	—	—	—
6900	654	1.95	693	2.15	729	2.36	764	2.57	798	2.78	830	3.00	—	—	—	—

CFM	ESP (in. wg)													
	0.80		0.90		1.00		1.10		1.20		1.30		1.40	
	Rpm	Bhp	Rpm	Bhp	Rpm	Bhp	Rpm	Bhp	Rpm	Bhp	Rpm	Bhp	Rpm	Bhp
4100	777	1.61	815	1.79	851	1.98	885	2.17	917	2.36	948	2.55	977	2.75
4300	785	1.71	822	1.90	858	2.09	892	2.28	925	2.48	956	2.68	985	2.89
4500	793	1.81	830	2.01	866	2.20	900	2.40	932	2.61	964	2.82	—	—
4700	801	1.92	838	2.12	873	2.32	907	2.53	940	2.74	971	2.95	—	—
4900	810	2.04	846	2.24	881	2.45	915	2.66	947	2.87	—	—	—	—
5100	819	2.16	855	2.37	889	2.58	923	2.80	—	—	—	—	—	—
5300	829	2.30	864	2.51	898	2.72	931	2.94	—	—	—	—	—	—
5500	839	2.44	874	2.65	907	2.87	—	—	—	—	—	—	—	—
5700	850	2.59	884	2.80	—	—	—	—	—	—	—	—	—	—
5900	861	2.74	894	2.96	—	—	—	—	—	—	—	—	—	—
6100	873	2.91	—	—	—	—	—	—	—	—	—	—	—	—
6300	—	—	—	—	—	—	—	—	—	—	—	—	—	—
6500	—	—	—	—	—	—	—	—	—	—	—	—	—	—
6700	—	—	—	—	—	—	—	—	—	—	—	—	—	—
6900	—	—	—	—	—	—	—	—	—	—	—	—	—	—

LEGEND

Bhp — Brake Horsepower
ESP — External Static Pressure

NOTES:
1. Units are available with several motor hp options. Refer to Table 1.
2. Static pressure losses for any options or accessories must be applied to external static pressure before entering the fan performance table.
3. Interpolation is permitted; extrapolation is not.
4. Fan performance is based on unit casing, and dry DX (direct expansion) coil losses at sea level.

Table 7 — Condenser Fan Performance — 50XCA14 Units

CFM	ESP (in. wg)															
	0.0		0.1		0.2		0.3		0.4		0.5		0.6		0.7	
	Rpm	Bhp	Rpm	Bhp	Rpm	Bhp	Rpm	Bhp	Rpm	Bhp	Rpm	Bhp	Rpm	Bhp	Rpm	Bhp
6000	496	1.03	533	1.17	570	1.36	608	1.58	646	1.82	683	2.06	719	2.31	755	2.56
6250	517	1.17	552	1.31	588	1.50	624	1.72	660	1.97	696	2.22	732	2.48	766	2.74
6500	537	1.31	571	1.46	605	1.65	640	1.88	675	2.13	710	2.39	744	2.66	778	2.93
6750	558	1.47	590	1.62	623	1.81	657	2.05	691	2.30	724	2.57	757	2.85	—	—
7000	579	1.64	610	1.79	642	1.99	674	2.23	707	2.49	739	2.76	—	—	—	—
7250	599	1.82	629	1.98	660	2.18	691	2.42	723	2.68	754	2.96	—	—	—	—
7500	620	2.02	649	2.18	679	2.38	709	2.62	739	2.89	—	—	—	—	—	—
7750	641	2.23	669	2.39	697	2.59	726	2.84	—	—	—	—	—	—	—	—
8000	661	2.45	688	2.61	716	2.82	—	—	—	—	—	—	—	—	—	—
8250	682	2.69	708	2.85	—	—	—	—	—	—	—	—	—	—	—	—
8500	703	2.94	—	—	—	—	—	—	—	—	—	—	—	—	—	—
8750	—	—	—	—	—	—	—	—	—	—	—	—	—	—	—	—
9000	—	—	—	—	—	—	—	—	—	—	—	—	—	—	—	—
9250	—	—	—	—	—	—	—	—	—	—	—	—	—	—	—	—
9500	—	—	—	—	—	—	—	—	—	—	—	—	—	—	—	—

CFM	ESP (in. wg)															
	0.5		0.6		0.7		0.8		0.9		0.9		0.9		0.9	
	Rpm	Bhp	Rpm	Bhp	Rpm	Bhp	Rpm	Bhp	Rpm	Bhp	Rpm	Bhp	Rpm	Bhp	Rpm	Bhp
6000	683	2.06	719	2.31	755	2.56	789	2.81	—	—	—	—	—	—	—	—
6250	696	2.22	732	2.48	766	2.74	800	3.00	—	—	—	—	—	—	—	—
6500	710	2.39	744	2.66	778	2.93	—	—	—	—	—	—	—	—	—	—
6750	724	2.57	757	2.85	—	—	—	—	—	—	—	—	—	—	—	—
7000	739	2.76	—	—	—	—	—	—	—	—	—	—	—	—	—	—
7250	754	2.96	—	—	—	—	—	—	—	—	—	—	—	—	—	—
7500	—	—	—	—	—	—	—	—	—	—	—	—	—	—	—	—
7750	—	—	—	—	—	—	—	—	—	—	—	—	—	—	—	—
8000	—	—	—	—	—	—	—	—	—	—	—	—	—	—	—	—
8250	—	—	—	—	—	—	—	—	—	—	—	—	—	—	—	—
8500	—	—	—	—	—	—	—	—	—	—	—	—	—	—	—	—
8750	—	—	—	—	—	—	—	—	—	—	—	—	—	—	—	—
9000	—	—	—	—	—	—	—	—	—	—	—	—	—	—	—	—
9250	—	—	—	—	—	—	—	—	—	—	—	—	—	—	—	—
9500	—	—	—	—	—	—	—	—	—	—	—	—	—	—	—	—

LEGEND

Bhp — Brake Horsepower
ESP — External Static Pressure

NOTES:
1. Units are available with several motor hp options. Refer to Table 1.
2. Static pressure losses for any options or accessories must be applied to external static pressure before entering the fan performance table.
3. Interpolation is permitted; extrapolation is not.
4. Fan performance is based on unit casing, and dry DX (direct expansion) coil losses at sea level.

Table 8 — Evaporator Fan Performance — 50XCA06 Units

CFM	ESP (in. wg)																			
	0.00		0.10		0.20		0.30		0.40		0.50		0.60		0.70		0.80		0.90	
	Rpm	Bhp	Rpm	Bhp	Rpm	Bhp	Rpm	Bhp	Rpm	Bhp	Rpm	Bhp	Rpm	Bhp	Rpm	Bhp	Rpm	Bhp	Rpm	Bhp
1500	594	0.23	594	0.23	594	0.23	612	0.24	670	0.29	727	0.34	785	0.40	842	0.46	897	0.53	950	0.60
1600	588	0.24	588	0.24	588	0.24	630	0.28	684	0.32	738	0.37	793	0.43	847	0.49	900	0.56	952	0.64
1700	582	0.26	582	0.26	596	0.27	650	0.31	701	0.36	752	0.41	803	0.47	854	0.53	905	0.60	955	0.67
1800	576	0.28	576	0.28	618	0.31	670	0.36	719	0.40	767	0.45	815	0.51	863	0.57	911	0.64	959	0.71
1900	570	0.29	586	0.31	641	0.35	691	0.40	738	0.45	784	0.50	829	0.56	875	0.62	920	0.69	966	0.76
2000	564	0.31	612	0.35	664	0.40	712	0.45	757	0.50	801	0.56	845	0.61	888	0.67	931	0.74	975	0.81
2100	593	0.36	637	0.40	687	0.46	734	0.51	778	0.56	820	0.61	862	0.67	903	0.73	944	0.80	985	0.87
2200	621	0.42	663	0.46	710	0.51	756	0.57	799	0.62	840	0.68	879	0.74	919	0.80	958	0.86	997	0.93
2300	649	0.48	689	0.52	734	0.58	779	0.63	820	0.69	860	0.75	898	0.81	936	0.87	974	0.93	1011	1.00
2400	677	0.54	715	0.59	759	0.64	801	0.70	842	0.76	880	0.82	918	0.88	954	0.95	990	1.01	1026	1.08
2500	705	0.61	742	0.66	783	0.72	824	0.78	864	0.84	902	0.90	938	0.97	973	1.03	1008	1.10	1043	1.17

CFM	ESP (in. wg)																			
	1.00		1.10		1.20		1.30		1.40		1.50		1.60		1.70		1.80		1.90	
	Rpm	Bhp	Rpm	Bhp	Rpm	Bhp	Rpm	Bhp	Rpm	Bhp	Rpm	Bhp	Rpm	Bhp	Rpm	Bhp	Rpm	Bhp	Rpm	Bhp
1500	1000	0.68	1047	0.76	1092	0.84	1134	0.93	1174	1.01	1213	1.10	1249	1.19	1284	1.28	1318	1.36	1351	1.46
1600	1001	0.71	1049	0.80	1094	0.88	1137	0.97	1178	1.06	1218	1.14	1255	1.24	1291	1.33	1326	1.42	1359	1.52
1700	1004	0.75	1051	0.83	1096	0.92	1139	1.01	1181	1.10	1221	1.19	1259	1.28	1296	1.38	1331	1.48	1365	1.57
1800	1007	0.79	1053	0.87	1098	0.96	1141	1.05	1183	1.14	1224	1.24	1262	1.33	1300	1.43	—	—	—	—
1900	1011	0.83	1056	0.92	1100	1.00	1143	1.09	1185	1.19	1225	1.28	1264	1.38	1302	1.48	—	—	—	—
2000	1018	0.89	1061	0.97	1104	1.05	1146	1.14	1187	1.24	1227	1.33	1266	1.43	—	—	—	—	—	—
2100	1027	0.94	1068	1.02	1109	1.11	1150	1.20	1190	1.29	1230	1.39	1268	1.49	—	—	—	—	—	—
2200	1037	1.01	1076	1.09	1116	1.17	1155	1.26	1194	1.35	1233	1.45	—	—	—	—	—	—	—	—
2300	1049	1.08	1087	1.16	1124	1.24	1162	1.33	1200	1.42	—	—	—	—	—	—	—	—	—	—
2400	1063	1.16	1099	1.23	1135	1.32	1171	1.40	1207	1.49	—	—	—	—	—	—	—	—	—	—
2500	1077	1.24	1112	1.32	1147	1.40	1181	1.48	1216	1.57	—	—	—	—	—	—	—	—	—	—

LEGEND

Bhp — Brake Horsepower
ESP — External Static Pressure

NOTES:
1. Units are available with several motor hp options. Refer to Table 1.
2. Static pressure losses for any options or accessories must be applied to external static pressure before entering the fan performance table.
3. Interpolation is permitted; extrapolation is not.
4. Fan performance is based on 1 in. standard throw-away filter, unit casing, and dry DX (direct expansion) coil losses at sea level.

Table 9 — Evaporator Fan Performance — 50XCA08 Units

CFM	ESP (in. wg)																			
	0.00		0.10		0.20		0.30		0.40		0.50		0.60		0.70		0.80		0.90	
	Rpm	Bhp	Rpm	Bhp	Rpm	Bhp	Rpm	Bhp	Rpm	Bhp	Rpm	Bhp	Rpm	Bhp	Rpm	Bhp	Rpm	Bhp	Rpm	Bhp
2200	594	0.26	594	0.26	594	0.26	644	0.31	707	0.38	766	0.45	820	0.53	871	0.62	918	0.70	963	0.79
2400	588	0.28	588	0.28	602	0.29	667	0.36	728	0.43	785	0.51	838	0.59	888	0.68	935	0.77	979	0.86
2600	582	0.29	582	0.29	630	0.34	692	0.42	750	0.49	805	0.58	857	0.66	906	0.75	952	0.84	996	0.94
2800	576	0.31	597	0.33	659	0.41	718	0.48	774	0.56	827	0.65	877	0.74	925	0.83	970	0.93	1013	1.03
3000	570	0.33	631	0.40	690	0.48	746	0.55	799	0.64	850	0.73	898	0.82	945	0.92	989	1.02	1032	1.12
3200	606	0.40	665	0.48	721	0.55	774	0.64	825	0.73	874	0.82	921	0.91	966	1.01	1009	1.12	1051	1.22
3400	644	0.48	699	0.56	752	0.64	803	0.73	852	0.82	899	0.92	944	1.02	988	1.12	1030	1.23	1071	1.34
3600	681	0.57	734	0.66	785	0.74	833	0.83	880	0.93	925	1.03	969	1.13	1011	1.24	1052	1.35	1092	1.46
3800	719	0.67	770	0.76	818	0.85	864	0.95	909	1.04	952	1.15	995	1.25	1035	1.36	1075	1.48	1114	1.59

CFM	ESP (in. wg)																			
	1.00		1.10		1.20		1.30		1.40		1.50		1.60		1.70		1.80		1.90	
	Rpm	Bhp	Rpm	Bhp	Rpm	Bhp	Rpm	Bhp	Rpm	Bhp	Rpm	Bhp	Rpm	Bhp	Rpm	Bhp	Rpm	Bhp	Rpm	Bhp
2200	1006	0.88	1047	0.97	1085	1.07	1122	1.17	1158	1.27	1193	1.37	1226	1.47	1258	1.58	—	—	—	—
2400	1022	0.96	1062	1.05	1101	1.15	1138	1.26	1174	1.36	1209	1.46	1242	1.57	1274	1.68	1306	1.79	1336	1.90
2600	1038	1.04	1078	1.14	1117	1.24	1154	1.35	1190	1.46	1225	1.57	1258	1.68	1290	1.79	1322	1.91	1352	2.03
2800	1055	1.13	1095	1.23	1133	1.34	1170	1.45	1206	1.56	1240	1.68	1274	1.79	1306	1.91	1338	2.03	1368	2.15
3000	1073	1.23	1112	1.34	1150	1.45	1187	1.56	1222	1.68	1256	1.79	1290	1.91	1322	2.04	1353	2.16	1384	2.29
3200	1091	1.33	1130	1.45	1167	1.56	1204	1.68	1239	1.80	1273	1.92	1306	2.04	1338	2.17	1369	2.30	1400	2.43
3400	1110	1.45	1148	1.57	1185	1.68	1221	1.81	1256	1.93	1290	2.05	1322	2.18	1354	2.31	1385	2.44	1416	2.58
3600	1131	1.58	1168	1.69	1204	1.82	1239	1.94	1274	2.07	1307	2.20	1340	2.33	1371	2.46	1402	2.60	1432	2.74
3800	1152	1.71	1188	1.84	1224	1.96	1258	2.09	1292	2.22	1325	2.35	1357	2.49	1389	2.62	1419	2.76	1449	2.90

CFM	ESP (in. wg)									
	2.00		2.10		2.20		2.30		2.40	
	Rpm	Bhp	Rpm	Bhp	Rpm	Bhp	Rpm	Bhp	Rpm	Bhp
2200	—	—	—	—	—	—	—	—	—	—
2400	1366	2.02	1395	2.13	—	—	—	—	—	—
2600	1382	2.14	1411	2.26	1439	2.39	1467	2.51	1494	2.63
2800	1398	2.27	1427	2.40	1455	2.52	1483	2.65	1510	2.78
3000	1414	2.41	1443	2.54	1471	2.67	1499	2.80	1526	2.94
3200	1429	2.56	1459	2.69	1487	2.82	1515	2.96	—	—
3400	1445	2.71	1474	2.85	1503	2.99	—	—	—	—
3600	1462	2.87	—	—	—	—	—	—	—	—
3800	—	—	—	—	—	—	—	—	—	—

LEGEND

Bhp — Brake Horsepower
ESP — External Static Pressure

NOTES:
1. Units are available with several motor hp options. Refer to Table 1.
2. Static pressure losses for any options or accessories must be applied to external static pressure before entering the fan performance table.
3. Interpolation is permitted; extrapolation is not.
4. Fan performance is based on 1 in. standard throw-away filter, unit casing, and dry DX (direct expansion) coil losses at sea level.

Table 10 — Evaporator Fan Performance — 50XCA12 Units

CFM	ESP (in. wg)																			
	0.00		0.10		0.20		0.30		0.40		0.50		0.60		0.70		0.80		0.90	
	Rpm	Bhp	Rpm	Bhp	Rpm	Bhp	Rpm	Bhp	Rpm	Bhp	Rpm	Bhp	Rpm	Bhp	Rpm	Bhp	Rpm	Bhp	Rpm	Bhp
3000	381	0.26	434	0.33	492	0.41	533	0.51	614	0.63	674	0.77	730	0.93	783	1.10	831	1.29	877	1.47
3200	406	0.32	456	0.39	510	0.48	566	0.58	624	0.69	681	0.83	735	0.99	788	1.16	837	1.35	882	1.54
3400	432	0.39	478	0.46	528	0.55	581	0.65	635	0.76	689	0.90	742	1.05	793	1.22	841	1.41	887	1.61
3600	457	0.46	501	0.54	548	0.63	597	0.73	647	0.84	699	0.98	749	1.13	799	1.30	847	1.48	892	1.68
3800	483	0.54	524	0.62	568	0.72	614	0.82	661	0.93	710	1.06	758	1.21	806	1.38	852	1.56	897	1.76
4000	508	0.63	547	0.71	588	0.81	632	0.92	677	1.04	722	1.17	768	1.31	814	1.47	859	1.65	903	1.85
4200	533	0.73	570	0.82	609	0.92	650	1.03	693	1.15	736	1.28	780	1.42	823	1.58	867	1.76	910	1.95
4400	559	0.83	594	0.93	631	1.03	670	1.15	710	1.27	751	1.40	792	1.54	834	1.70	876	1.87	917	2.06
4600	584	0.95	618	1.05	653	1.16	690	1.28	728	1.40	767	1.53	806	1.68	846	1.83	886	2.01	926	2.19
4800	610	1.08	641	1.19	675	1.30	710	1.42	746	1.54	783	1.68	821	1.82	859	1.98	897	2.15	936	2.33
5000	635	1.22	666	1.33	698	1.45	731	1.57	766	1.70	801	1.84	837	1.98	873	2.14	910	2.31	946	2.49

CFM	ESP (in. wg)																			
	1.00		1.10		1.20		1.30		1.40		1.50		1.60		1.70		1.80		1.90	
	Rpm	Bhp	Rpm	Bhp	Rpm	Bhp	Rpm	Bhp	Rpm	Bhp	Rpm	Bhp	Rpm	Bhp	Rpm	Bhp	Rpm	Bhp	Rpm	Bhp
3000	919	1.66	958	1.85	994	2.04	1029	2.22	1061	2.40	1092	2.57	1122	2.74	1149	2.91	—	—	—	—
3200	925	1.74	965	1.94	1003	2.14	1039	2.34	1072	2.54	1104	2.73	1134	2.92	—	—	—	—	—	—
3400	931	1.82	972	2.03	1010	2.24	1047	2.45	1081	2.67	1114	2.88	—	—	—	—	—	—	—	—
3600	936	1.89	977	2.11	1016	2.33	1053	2.56	1089	2.78	—	—	—	—	—	—	—	—	—	—
3800	941	1.97	982	2.19	1022	2.42	1059	2.65	1095	2.89	—	—	—	—	—	—	—	—	—	—
4000	946	2.06	987	2.28	1027	2.51	1064	2.75	1101	3.00	—	—	—	—	—	—	—	—	—	—
4200	951	2.16	992	2.38	1031	2.61	1069	2.85	—	—	—	—	—	—	—	—	—	—	—	—
4400	958	2.27	998	2.49	1037	2.72	1074	2.96	—	—	—	—	—	—	—	—	—	—	—	—
4600	965	2.39	1004	2.61	1042	2.83	—	—	—	—	—	—	—	—	—	—	—	—	—	—
4800	974	2.53	1011	2.74	1049	2.97	—	—	—	—	—	—	—	—	—	—	—	—	—	—
5000	983	2.68	1020	2.89	—	—	—	—	—	—	—	—	—	—	—	—	—	—	—	—

LEGEND

Bhp — Brake Horsepower
ESP — External Static Pressure

NOTES:
1. Units are available with several motor hp options. Refer to Table 1.
2. Static pressure losses for any options or accessories must be applied to external static pressure before entering the fan performance table.
3. Interpolation is permitted; extrapolation is not.
4. Fan performance is based on 1 in. standard throw-away filter, unit casing, and dry DX (direct expansion) coil losses at sea level.

Table 11 — Evaporator Fan Performance — 50XCA14 Units

CFM	ESP (in. wg)																			
	0.00		0.10		0.20		0.30		0.40		0.50		0.60		0.70		0.80		0.90	
	Rpm	Bhp	Rpm	Bhp	Rpm	Bhp	Rpm	Bhp	Rpm	Bhp	Rpm	Bhp	Rpm	Bhp	Rpm	Bhp	Rpm	Bhp	Rpm	Bhp
3500	450	0.30	495	0.46	537	0.56	583	0.65	633	0.76	687	0.89	742	1.05	793	1.23	841	1.41	885	1.60
3700	476	0.35	519	0.53	558	0.64	600	0.73	646	0.84	696	0.96	748	1.12	799	1.29	847	1.48	892	1.68
3900	502	0.41	543	0.60	580	0.72	619	0.83	661	0.93	707	1.05	756	1.19	805	1.37	852	1.56	898	1.76
4100	527	0.48	566	0.68	602	0.82	639	0.93	678	1.03	720	1.15	765	1.29	811	1.45	858	1.64	903	1.84
4300	553	0.55	591	0.77	625	0.92	659	1.04	696	1.15	735	1.26	776	1.40	820	1.55	865	1.73	909	1.93
4500	579	0.63	615	0.87	648	1.03	681	1.15	715	1.27	751	1.39	789	1.52	830	1.67	872	1.84	915	2.03
4700	604	0.72	639	0.97	671	1.14	702	1.28	734	1.40	768	1.52	804	1.65	842	1.80	882	1.96	922	2.15
4900	630	0.81	664	1.08	694	1.27	724	1.41	755	1.55	786	1.67	820	1.80	855	1.94	892	2.10	931	2.28
5100	656	0.92	688	1.20	718	1.40	746	1.56	776	1.70	806	1.83	837	1.96	870	2.10	905	2.26	941	2.43
5300	682	1.03	713	1.33	741	1.54	769	1.71	797	1.86	826	2.00	855	2.14	886	2.28	919	2.43	953	2.59
5500	707	1.15	738	1.47	765	1.69	792	1.88	819	2.03	846	2.18	874	2.32	903	2.46	934	2.62	966	2.78
5700	733	1.28	763	1.61	789	1.85	815	2.05	841	2.22	867	2.37	894	2.52	921	2.67	950	2.82	980	2.98
5900	759	1.42	787	1.77	813	2.02	838	2.23	863	2.41	888	2.57	914	2.73	940	2.88	968	3.03	996	3.19
6100	784	1.57	812	1.93	838	2.20	862	2.42	886	2.62	910	2.79	934	2.95	960	3.11	986	3.27	1013	3.43

CFM	ESP (in. wg)																			
	1.00		1.10		1.20		1.30		1.40		1.50		1.60		1.70		1.80		1.90	
	Rpm	Bhp	Rpm	Bhp	Rpm	Bhp	Rpm	Bhp	Rpm	Bhp	Rpm	Bhp	Rpm	Bhp	Rpm	Bhp	Rpm	Bhp	Rpm	Bhp
3500	925	1.78	962	1.97	997	2.15	1030	2.32	1061	2.50	1090	2.67	1119	2.83	1146	3.00	1172	3.16	1198	3.32
3700	933	1.88	971	2.07	1007	2.27	1041	2.46	1072	2.65	1103	2.83	1131	3.01	1159	3.19	1186	3.37	1211	3.54
3900	940	1.97	979	2.17	1016	2.38	1051	2.59	1083	2.79	1114	2.99	1143	3.19	1172	3.38	1199	3.57	1225	3.76
4100	946	2.05	986	2.27	1024	2.49	1059	2.71	1093	2.93	1124	3.14	1154	3.35	1183	3.56	1211	3.77	1237	3.97
4300	951	2.15	992	2.37	1030	2.60	1067	2.83	1101	3.06	1133	3.29	1164	3.51	1194	3.73	1222	3.95	1249	4.17
4500	957	2.24	998	2.47	1036	2.71	1073	2.94	1108	3.18	1141	3.43	1173	3.66	1203	3.90	1232	4.14	1260	4.37
4700	963	2.35	1003	2.58	1042	2.81	1079	3.06	1115	3.31	1149	3.56	1181	3.81	1212	4.06	1241	4.31	1269	4.56
4900	970	2.48	1009	2.70	1047	2.93	1085	3.18	1121	3.43	1155	3.69	1188	3.95	1219	4.22	1249	4.48	1278	4.74
5100	978	2.62	1016	2.83	1053	3.06	1090	3.31	1126	3.56	1161	3.83	1194	4.10	1226	4.37	1257	4.64	1286	4.91
5300	988	2.78	1024	2.98	1060	3.20	1096	3.44	1132	3.70	1166	3.97	1200	4.24	1232	4.52	1263	4.80	—	—
5500	999	2.95	1033	3.15	1068	3.37	1103	3.60	1137	3.85	1172	4.11	1205	4.39	1238	4.67	1269	4.96	—	—
5700	1012	3.15	1044	3.34	1077	3.55	1110	3.77	1144	4.02	1178	4.28	1211	4.55	1243	4.83	—	—	—	—
5900	1025	3.36	1056	3.55	1087	3.75	1119	3.97	1152	4.20	1184	4.45	1217	4.72	—	—	—	—	—	—
6100	1040	3.60	1069	3.78	1099	3.97	1129	4.18	1160	4.41	1192	4.65	1223	4.91	—	—	—	—	—	—

LEGEND

Bhp — Brake Horsepower
ESP — External Static Pressure

NOTES:
1. Units are available with several motor hp options. Refer to Table 1.
2. Static pressure losses for any options or accessories must be applied to external static pressure before entering the fan performance table.
3. Interpolation is permitted; extrapolation is not.
4. Fan performance is based on 1 in. standard throw-away filter, unit casing, and dry DX (direct expansion) coil losses at sea level.

Compressor Rotation — To determine whether or not compressor is rotating in the proper direction:

1. Connect service gages to suction and discharge pressure fittings.
2. Energize the compressor.
3. The suction pressure should drop and the discharge pressure should rise, as is normal on any start-up.
4. If the suction pressure does not drop and the discharge pressure does not rise to normal levels, the compressor may be rotating in the wrong direction.
5. Since the compressor and fan motors are connected in phase during production, it is likely that the evaporator and condenser fans are probably also rotating in the wrong direction.
6. Turn off power to the unit and lock and tag disconnect per standard safety procedures.
7. Reverse any two of the unit power leads.
8. Remove lock and tag per standard safety procedures and reapply power to the unit.
9. The suction and discharge pressure levels should now move to their normal start-up levels.

NOTE: When the compressor is rotating in the wrong direction, the unit makes an elevated level of noise and does not provide cooling.

Operating Sequence — All units require the addition of a thermostat accessory package to complete the control circuit. The sequence of operation may vary depending on which package is selected.

ROOM-MOUNTED THERMOSTAT — These units use an electronic thermostat mounted in the conditioned space.

FAN CIRCULATION — The indoor-fan motor is energized through G on the thermostat and the indoor-fan contactor is energized. This starts the indoor-fan motor (IFM). The fan will operate to provide continuous air circulation.

COOLING — The indoor fan will operate continuously or when the compressor runs, depending on the setting of the thermostat fan selector switch. When the thermostat closes on a call for cooling (Y1), the outdoor fan relay (OFR) or outdoor-fan contactor (OFC) are energized to start the condenser fan

and compressor contactor closes to start the first stage compressor.

If additional cooling demand is required, the second stage (Y2) on 50XCA012,014 units will close and will then start the second-stage compressor. When the thermostat is satisfied, the second stage compressor will stop first, and then the first stage compressors will stop when cooling demand is satisfied. The outdoor fan will also stop as soon as the first stage cooling is satisfied.

HEATING — The indoor fan will operate continuously or when the heater runs, depending on the setting of the thermostat fan selector switch. When the thermostat closes (on a call for heating), the thermostat activates the water or steam control valve (provided by customer) or electric heater to meet heating requirements.

ALL UNITS — The control circuit incorporates a current sensing lockout relay (Cycle-LOC™ device) that locks off the compressor(s) for 5 minutes when any safety device is activated (low or high-pressure switches, or compressor internal overload). If any compressor safety device opens, the compressor will stop. High and low-pressure switches and compressor motor overload protectors will reset automatically when the condition which caused the device to trip has dropped below the reset condition. To reset the Cycle-LOC control device, manually turn the control power OFF, then back ON at the thermostat.

Low Ambient Operation (Factory Installed) — Refrigerant pressure controlled VFD (variable frequency drive) adjusts fan speed to control head pressure. This fan speed control permits unit to operate in cooling even in winter, when outdoor air temperature is down to 0° F. Dual circuit units have transducers that monitor refrigerant pressure on each circuit and provide continuous operation in the event one circuit is down. The VFD is pre-programmed and run tested at factory set point for discharge pressure of 400 psig.

Configuration of Low Ambient Kit (Field Installation) — The original unit should have the wiring diagrams as shown in the typical wiring schematic in Troubleshooting section. The motor start and wiring should be replaced with a 24-v relay and the VFD, with the wiring shown in either the typical wiring schematic for low ambient option (50XCA06-14 units). Wiring diagrams are provided in Troubleshooting section.

Be sure the VFD jumper wires are set as shown in the wiring diagram and the two DIP switches are set to the “0” position for voltage control.

The parameters shown in Table 12 must be set for low ambient operation. Motor FLA (full load amps) values are shown in Table 13 (208/230-v and 460-v) and Table 14 (575-v) for reference. Use actual nameplate motor FLA value since this value is subject to change.

When the drive is installed and wired, it will be necessary to configure the drive for this application, as follows:

1. When the drive first starts, system will prompt to run the Carrier Configuration Assistant. Exit this option.
2. Configure the drive parameters by pressing the menu button and using the arrow keys to select “Parameters,” then press the enter key.
3. Move to the appropriate sub-group using the arrow keys (first two digits of the parameter to be changed), then press <SEL>.
4. Select the parameter to view or change using the arrow keys. Change a parameter by scrolling to that parameter and pressing <EDIT>.
5. Select the New Value, then press <SAVE>.

Table 12 — VFD Head Pressure Control Parameters

PARAMETER INDEX	PARAMETER FUNCTION	SELECTION
9902	Application Macro	1 (HVAC Default)
9906	Motor Nominal Voltage	Unit Voltage (use value on nameplate)
9907	Motor Nominal Current	Motor FLA (use value on nameplate)
9908	Motor Nominal Speed	1750
9909	Motor Nominal Power	Motor HP (use value on nameplate)
1102	EXT 1 - EXT 2 SEL	EXT 2
1301	AI-1 Minimum	5%
1302	AI-1 Maximum	45%
1304	AI-2 Minimum	5%
1305	AI-2 Maximum	45%
1501	AO1 Content	122 (RO1-3 Status)
2007	FREQUENCY MIN	30.0 HZ
2202	Acceleration Time	10 s
2203	Decel Time	11 s
3404	OUTPUT 1 DISPLAY FORM	Direct
3408	OUTPUT 2 PARAMETER	PID 1 SETPOINT
3409	SIGNAL 2 MIN	0.0 PSI
3410	SIGNAL 2 MAX	667.0
3412	OUTPUT 2 UNITS	PSI
3413	OUTPUT 2 MIN	0.0 PSI
3414	OUTPUT 2 MAX	667.0
3415	OUTPUT 3 PARAMETER	PID 1 FEEDBACK
3416	SIGNAL 3 MIN	0.0 PSI
3417	SIGNAL 3 MAX	667 PSI
3419	OUTPUT 3 UNITS	PSI
3420	OUTPUT 3 MIN	0.0 PSI
3421	OUTPUT 3 MAX	667 PSI
4001	PID GAIN	0.7
4002	PID INTEGRATE	5 s
4003	DERIVATION TIME	DISABLE
4005	ERROR VALUE INVERTED	YES
4006	UNITS	PSI
4008	0% VALUE	0.0 PSI
4009	100 % VALUE	667 PSI
4010	SET POINT SELECT	INTERNAL
4011	INTERNALSET POINT	300.0
4014	Feedback Select	7 [Max(A1, A2)]
4017	ACT-2 Input	1 (AI1)

Table 13 — Motor FLA Values (208/230-v, 460-v)

HP	PART NUMBER	208/230V	460V
0.50	99MR0127BA020103	2.2	1.1
0.75	99MR0227BA020103	2.6	1.3
1.00	99MR0327BA250103	3.4	1.5
1.50	99MR0427BA260103	4.6	2.1
2.00	99MR0427BA260103	6.0	2.8
3.00	99MS0627BA27010B	9.2	4.3

Table 14 — Motor FLA Values (575-v)

HP	PART NUMBER	575V
0.50	99MR0107BA020103	0.9
0.75	99MR0207BA020103	1.0
1.00	99MR0307BA250103	1.1
1.50	99MR0407BA260103	1.6
2.00	99MR0507BA260103	2.1
3.00	99MS0607BA27010B	3.4

SERVICE

Cleaning Evaporator and Condenser Coils — Do not use high-pressure water or air. Damage to fins may result. Clean coils with a vacuum cleaner, fresh water, compressed air, or a bristle brush (not wire). Backflush coil to remove debris. Commercial coil cleaners may also be used to help remove grease and dirt. Steam cleaning is NOT recommended.

Units installed in corrosive environments should be cleaned as part of a planned maintenance schedule. In this type of application, all accumulations of dirt should be cleaned off the coil.

Lubrication — The 50XCA06-14 evaporator fans and 50XCA06-14 condenser fans have permanently lubricated bearings.

Condenser Fan Adjustment — To prevent personal injury, be sure wire fan guards (provided by customer) are secured in place over each fan discharge (or that fans are ducted) before starting the unit.

TO CHANGE FAN SPEED

1. Shut off unit power supply. Lock out power supply and tag disconnect locations.
2. Loosen fan belt by loosening fan motor belt adjusting bolts. Do not loosen fan motor mounting bracket from unit.
3. Loosen movable pulley flange setscrew (Fig. 17).
4. Screw movable flange toward fixed flange to increase fan speed and away from fixed flange to decrease speed. Increasing fan speed increases load on motor. Do not exceed maximum allowable fan speed or motor full load amps indicated on unit nameplate. See Tables 2 and 3 for electrical data.
5. Set movable flange setscrew at nearest flat of pulley hub and tighten setscrew.
6. Check pulley alignment and belt tension adjustment as described below.
7. Check fan operation. Repeat above procedure as required.

Pulley Alignment — Shut off unit power supply. Lock out power supply and tag disconnect locations. Loosen fan motor pulley setscrews and slide fan pulley along fan shaft. Make angular alignment by loosening motor from mounting bracket. Check alignment with a straightedge (see Fig. 17).

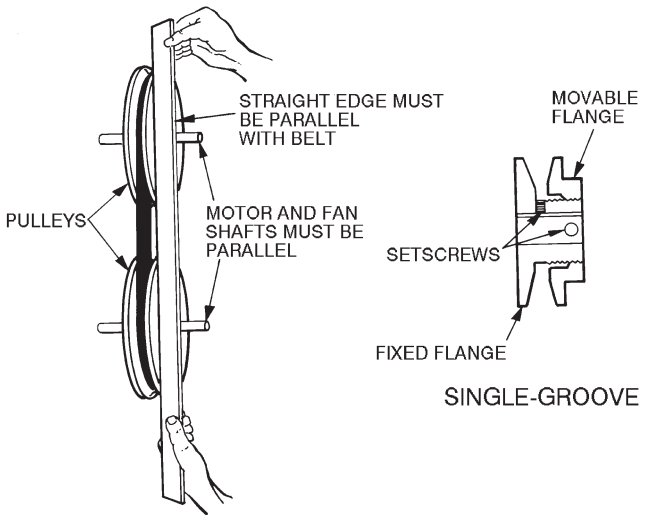

Fig. 17 — Fan Pulley Adjustments

Belt Tension Adjustment — Shut off unit power supply. Lock out power supply and tag disconnect locations. Loosen fan motor mounting plate bolts. Do not loosen motor mounting bracket from unit. Adjust belt tensioning bolts until proper belt tension is obtained.

Changing Fan Wheel — If a fan wheel should fail, it may be replaced as follows:

1. Remove belts from fan pulley.
2. Loosen locking collars on the fan bearings and set screws on the fan wheels.
3. Remove the shaft through the access panel on either side of the unit.
4. Remove the fan cut-off plate in the fan discharge.
5. Remove the fan wheel through the fan discharge opening.
6. Replace the wheel, and reverse Steps 1-4 above.

Fan Bearing Replacement — If a fan bearing fails, replace it as follows:

1. Remove belts from the fan pulley.
2. Support fan shaft.
3. Loosen locking collar on fan bearing.
4. Remove bearing from the shaft.
5. Install new bearing onto the shaft, and reverse Steps 1-3 above.

Concentric Alignment — Shaft and wheels must be concentrically centered with the venturi or air inlet of the fan housing (see Fig. 18).

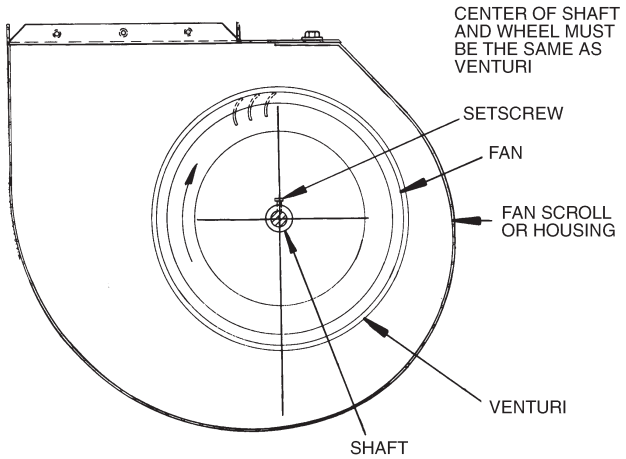

Fig. 18 — Concentric Alignment

Shaft bearings are supports by bearing supports (Fig. 19). If shaft and wheels are concentrically misaligned from shipping shock, it is possible to re-bend the bearing support arms to the original positions. Replace the bearing support if it has extensive damage.

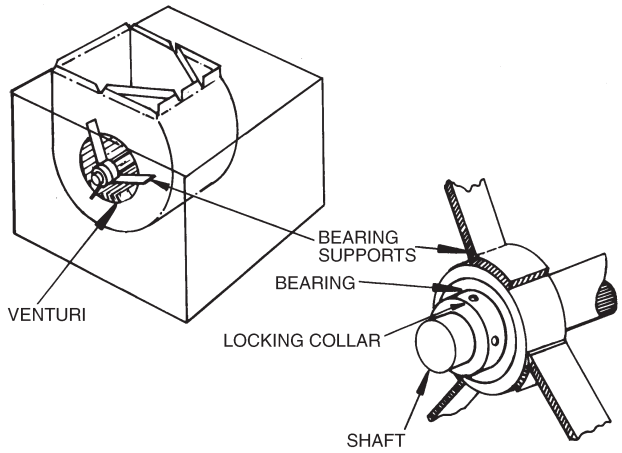

Fig. 19 — Fan Shaft Bearings

Evaporator and Condenser Motor Starter Setting (after Lockout/Tagout) — Motor starter is factory set. If starter is replaced in the field, use the following procedure to set:

1. On the starter, adjust the Motor Overload to match the **FLA Rating** of the installed motor by turning the Overload Setpoint wheel to the appropriate value. See Fig. 20. Evaporator and condenser motor FLA Ratings are listed in Table 15.
2. On the starter, turn the Motor Overload Reset wheel to **M-O** (referred to as Manual Reset).
3. On the starter, depress the Motor Overload Reset wheel (wheel also acts as reset button).
4. Turn the Power Switch/Disconnect Switch of the Start/Stop Station to the **ON** Position.

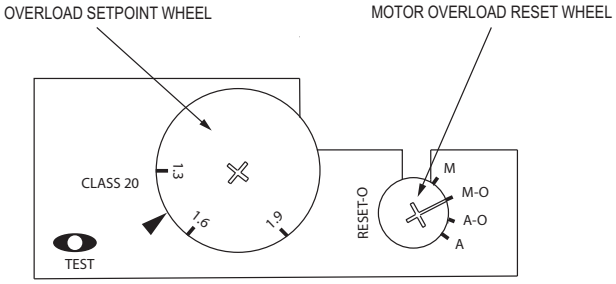

Fig. 20 — Motor Starter Setting

Table 15 — Evaporator and Condenser Motor Starter Settings

HP	208-230 V			460 V		575 V	
	Part Number	FLA		Part Number	FLA	Part Number	FLA
		208V	230V				
0.50	99MR0127BA020103	1.8	2.2	99MR0127BA020103	1.1	99MR0107BA020103	0.9
0.75	99MR0227BA020103	2.5	2.6	99MR0227BA020103	1.3	99MR0207BA020103	1.0
1.00	99MR0327BA250103	3.4	3.0	99MR0327BA250103	1.5	99MR0307BA250103	1.1
1.50	99MR0427BA260103	4.6	4.2	99MR0427BA260103	2.1	99MR0407BA260103	1.6
2.00	99MR0527BA260103	6.0	5.6	99MR0527BA260103	2.8	99MR0507BA260103	2.1
3.00	99MS0627BA27010B	9.2	8.6	99MS0627BA27010B	4.3	99MS0607BA27010B	3.4

MAINTENANCE

Cleaning — The unit should be thoroughly cleaned inside and out. Frequency of cleaning will depend on unit location and area conditions. Drains must be kept free of dirt and trash. Coils can be cleaned with a stiff brush or vacuum cleaner. Coil can be reached through access panels.

Inspection — Check coil baffles for tight fit to prevent air from bypassing the coil. Check panels for air leakage, particularly those sealing the fan and coil compartments. Check for loose electrical connections, proper refrigerant charge, and refrigerant piping leaks.

Air Filters — Air filters may be installed on the condenser air inlet. Air filters should be replaced or cleaned on a regular basis depending on how dirty the operating environment is. Failure to clean air filters regularly will result in loss of unit performance and possible nuisance tripping of the high-pressure switch.

Condensate Drain — The drain pan and trap should be cleaned at least twice per year. After cleaning, test the condensate drain for proper operation by pouring a bucket of water into the condensate drain pan. The water should flow out immediately and evenly.

Checking System Charge

NOTE: Condenser and evaporator airflow must be properly set before checking system charge.

The 50XCA units are shipped with full operating charge. If recharging is necessary:

1. Insert thermometer bulb in insulating rubber sleeve on liquid line near filter drier. Use a digital thermometer for all temperature measurements. DO NOT use a mercury or dial-type thermometer.
2. Connect refrigerant pressure gage to discharge line near compressor.
3. After unit condition have stabilized, read head pressure on discharge line gage.

   NOTE: Operate unit a minimum of 15 minutes before checking charge.
4. From standard Pressure-Temperature chart for R-410A, find equivalent saturated condensing temperature.
5. Read liquid line temperature on thermometer; then subtract from saturated condensing temperature. The difference equals subcooling temperature.
6. Compare the subcooling temperature with the normal temperature listed in Table 16. If the measured liquid line temperature does not agree with the required liquid line temperature, ADD refrigerant to raise the temperature or REMOVE refrigerant (using standard practices) to lower the temperature (allow a tolerance of ± 3° F).

   Example:
   Head pressure (from gage) . . . . . .416.4 psig
   Saturated condensing temp (from chart) . . . . . 120 F
   Liquid line temp (from thermometer). . . . . 100 F
   Subcooling (by subtraction) . . . . . 20 F

Table 16 — Subcooling Temperature

UNIT 50XCA	SUBCOOLING*
06, 08	20 ± 3° F
12, 14	21.5 ± 3° F

*Saturated condensing temperature at compressor minus liquid line temperature.

⚠ WARNING

To prevent personal injury, wear safety glasses and gloves when handling refrigerant. Do not overcharge system — this can cause compressor flooding.

NOTE: Do not vent or depressurize unit refrigerant to atmosphere. Remove and recover refrigerant following accepted practices.

Access Panel Removal

TOP PANEL — Remove 3 to 6 screws, pull out panel, and remove.

CONTROL PANEL — Remove 4 screws and remove the panel.

BOTTOM PANEL — Remove 3 to 6 screws in bottom panel and lift up to remove the panel.

Evaporator-Fan Motor Removal

⚠ CAUTION

Before attempting to remove fan motors or motor mounts, place a piece of plywood over evaporator coils to prevent coil damage.

NOTE: Motor power wires need to be disconnected from control box terminals before motor is removed from unit.

1. Shut off unit main power supply. Lock out power supply and tag disconnect locations.
2. Loosen bolts on mounting bracket so that fan belt can be removed.
3. Disconnect motor power wires from motor terminals.
4. Remove the 4 motor mounting bolts from bottom of motor.
5. Remove motor. Rest motor securely on a high platform such as a step ladder. Do not allow motor to hang by its power wires.

NOTE: Use the same procedure to remove the condenser fan motor.

Pressure Relief Device — All units are equipped with a fusible-plug type safety relief device on the refrigerant tubing. The relief setting is 210 F.

Current Protection Device — All units are equipped with a current-sensing lockout relay on each circuit. This device will lock out the compressor after any safety trip (high-pressure switch, low-pressure switch, or internal overload of the compressor for 5 minutes). Check reason for lockout before resetting the device. To reset, turn the thermostat system switch to OFF, then back to COOL position.

High and Low-Pressure Switch — The high-pressure switch is located on the compressor discharge line. The low-pressure switch is located on the suction line.

Oil Charge — All units are factory charged with oil (see Table 1 for compressor model number). It is not necessary to add oil unless the compressor is removed from the unit. If additional oil is needed, do not use mineral oils. Only synthetic oils are satisfactory.

TROUBLESHOOTING

Refer to Table 17 to determine the possible cause of the problem and the associated procedure necessary to correct it. See Fig. 21-29 for typical wiring schematics.

Table 17 — Troubleshooting Procedure

PROBLEM	POSSIBLE CAUSE	CORRECTION PROCEDURE
Unit Will Not Start.	Loss of unit power	Check power source. Check fuses, circuit breakers, disconnect switch. Check electrical contacts.
	Unit voltage not correct	Check and correct.
	Open fuse	Check for short circuit in unit.
	Open protection device	Check relays, contacts, pressure switches.
	Unit or motor contactor out of order	Test and replace if necessary.
Fan Does Not Operate.	Contactor or relay overload or out of order	Test and replace if necessary.
	Motor defective	Test and replace if necessary.
	Broken belt	Replace belt.
	Loose electrical contact	Tighten contact.
Compressor is Noisy, but Will Start.	Under voltage	Check and correct.
	Defect in compressor motor	Replace compressor.
	Missing phase	Check and correct.
	Compressor seized	Check and replace if necessary.
Compressor Starts, but Does Not Continue to Run.	Compressor or contact defect	Test and replace if necessary.
	Unit is not properly charged	Check and correct any leaks. Adjust refrigerant charge.
	Unit is oversized	Check heat load calculation.
	Compressor is overloaded	Check protection device and replace. Check for missing phase. Check TXV. Check temperature in suction discharge line.
Unit is Noisy.	Compressor noise	Check TXV and replace if necessary. Check internal noise.
	Tube vibration or condenser water problem	Check and correct.
	Unit panel or part vibrating	Check and tighten appropriate part.
Unit Runs Continuously, but has Low Capacity.	Unit is undersized	Check heat load calculation.
	Low refrigerant or non-condensing gas present	Check for leaks and add refrigerant or gas as necessary. Replace refrigerant if non-condensing gas present.
	Dirty condenser coil	Check and correct. Clean coil.
	Compressor defect	Check pressure and amps. Replace if necessary.
	Insufficient flow of refrigerant in evaporator	Check filter drier and replace if necessary. Check TXV and adjust or replace if necessary. Check position of TXV bulb and equalizer.
	Low airflow	Check filters, and clean or replace as necessary. Check coils, and clean as necessary. Check for restrictions in ductwork. Check fan rotation and adjust. Check fan motor. Check belts for wear.
	Oil in evaporator	Drain evaporator.
High Discharge Pressure.	Low airflow in condenser	Check fan rotation. Check motor, and replace if necessary. Check belts, and replace if necessary. Check coils, and clean if necessary.
	Dirty condenser coil	Clean condenser.
	High temperature in condenser air or air recirculation	Check for short circuit of air. Check water supply installation.
	Overcharged	Check and reclaim excess charge. Adjust subcooling.
	Non-condensing gas present	Verify and correct. Replace refrigerant.

LEGEND

TXV — Thermostatic Expansion Valve

Table 17 — Troubleshooting Procedure (cont)

PROBLEM	POSSIBLE CAUSE	CORRECTION PROCEDURE
Discharge Pressure too Low.	Outdoor temperature too low	Install low-ambient control.
	Condenser airflow too high	Check and adjust.
	Low charge	Check for and repair leaks and add refrigerant as necessary.
	Compressor fault	Check suction and discharge pressure.
Suction Pressure too Low.	Discharge pressure is low	See Discharge Pressure Too Low section of this table above.
	Low thermal load	Check building load.
	Low refrigerant	Check for and repair leaks and add refrigerant as necessary.
	Low airflow in evaporator	Clean filter. Remove scale. Check for blockage in ducts. Check fan rotation. Check motor operation. Check belts.
	Low refrigerant flow in evaporator	Check for obstruction in filter drier. Check for obstruction in TXV. Check super heating. Check position of TXV bulb and equalizer.
Suction Pressure too High.	High thermal load	Check design conditions.
	Compressor defect	Check pressures, and replace if necessary.
Condensate Water Leaks.	Defective connection	Check and correct.
	Blocked drain	Clean drain pan.
	Drain lines incorrect	Check and correct.

LEGEND

TXV — Thermostatic Expansion Valve

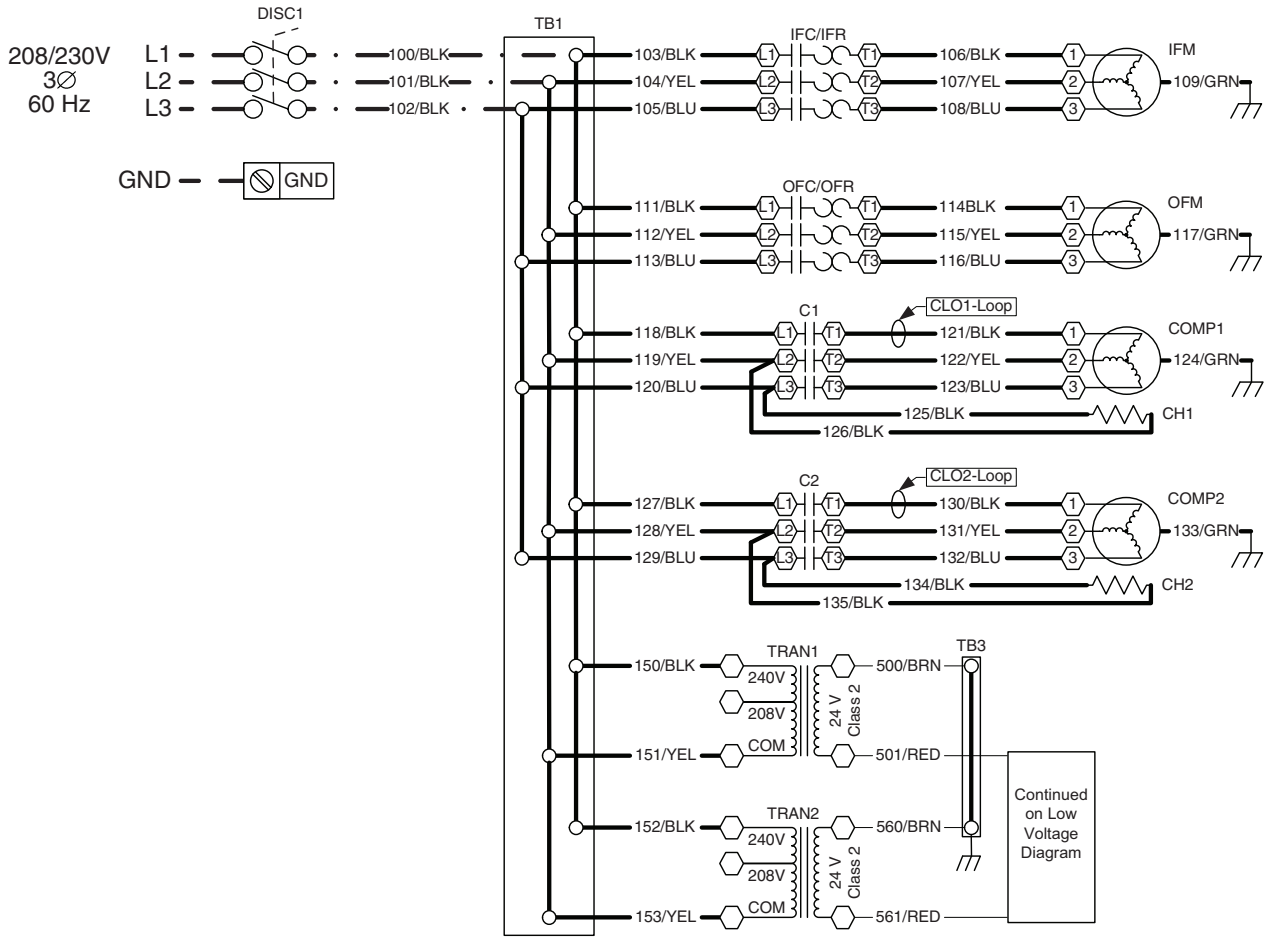

Fig. 21 — Typical Line Voltage Wiring Schematic (50XCA012,014, 208/230-3-60 Units Shown)

LEGEND AND NOTES FOR FIG. 21-29

LEGEND

C — Compressor Contactor
CH — Crankcase Heater
CLO — Compressor Lockout
COMP — Compressor
CR — Control Relay
DISC — Disconnect
FRZ — Freeze Protection
GND — Ground
HPS — High Pressure Switch
HR — Heat Relay
IFC — Indoor-Fan Contactor
IFM — Indoor-Fan Motor
IFR — Indoor-Fan Relay
LPS — Low Pressure Switch
LLT — Liquid Line Temperature
OFC — Outdoor-Fan Contactor
OFM — Outdoor-Fan Motor
OFR — Outdoor-Fan Relay
PRES — Pressure Transducer
SAT — Supply Air Thermistor
TB — Terminal Block
TRAN — Transformer
VFD — Variable Frequency Drive

Terminal Block Connection
Marked Terminal
Unmarked Terminal
Splice
Factory Wiring
Field Power Wiring

*Disconnect can be factory or field installed.

NOTES:

1. Fan motors are inherently thermally protected.
2. Three-phase motors are protected under primary single phase conditions.
3. Use conductors suitable for at least 194 F (90 C) when replacing factory wiring.
4. Use copper conductors only.
5. Wiring for field power supply must be rated at 165 F (75 C) minimum.
6. Phase rotation sequence is L2-L1-L3.
7. TRAN1 and TRAN2 power separate 24-V circuits. These circuits should not be interconnected and separation must be maintained.
8. Transformers are factory wired for 240 v operation. Move the black wire to the 208 v tap for 208 v operation.

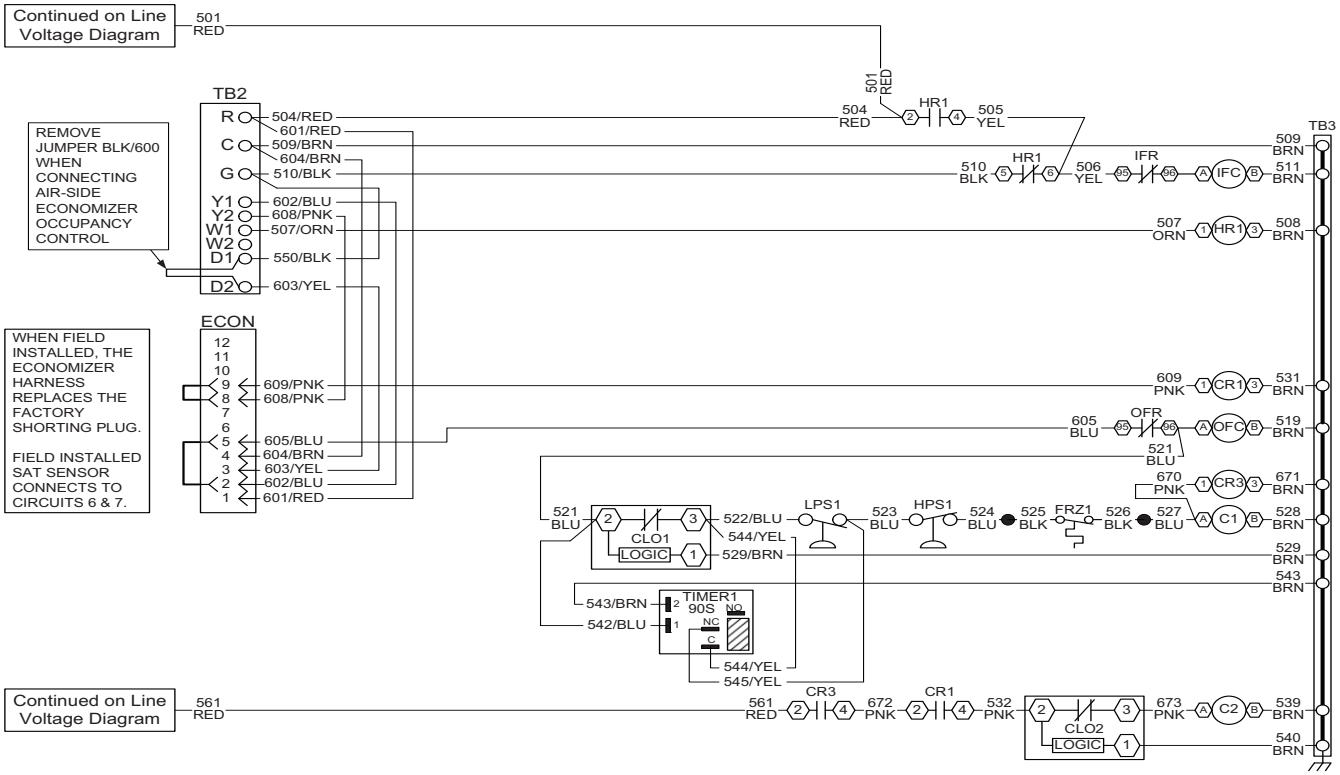

NOTE: See legend and notes on page 30.

Fig. 21 — Typical Wiring Schematic (50XCA012,014, 208/230-3-60 Units Shown) (cont)

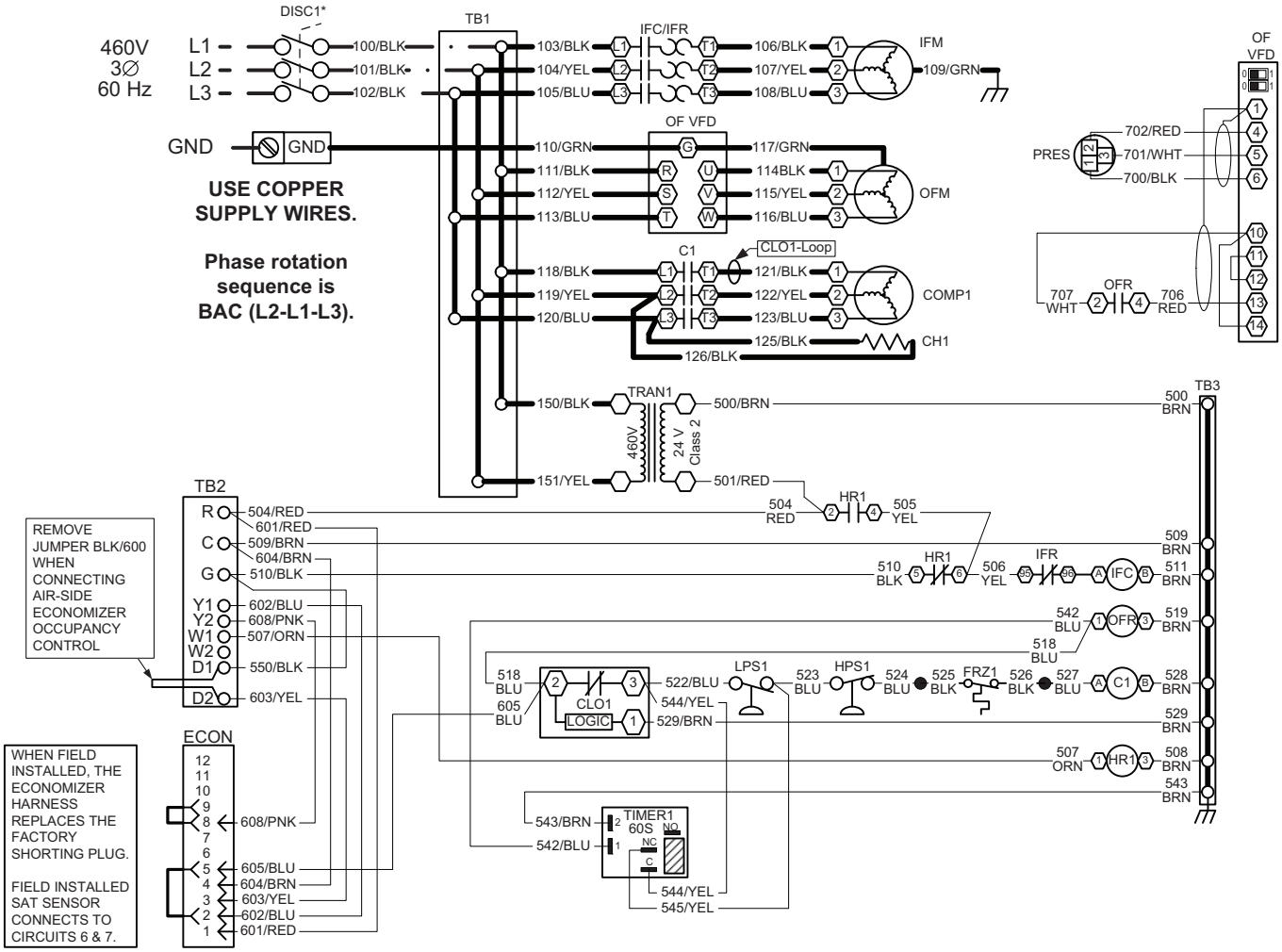

NOTE: See legend and notes on page 30.

Fig. 22 — Typical Wiring Schematic (50XCA06,08, 460-v Units Shown)

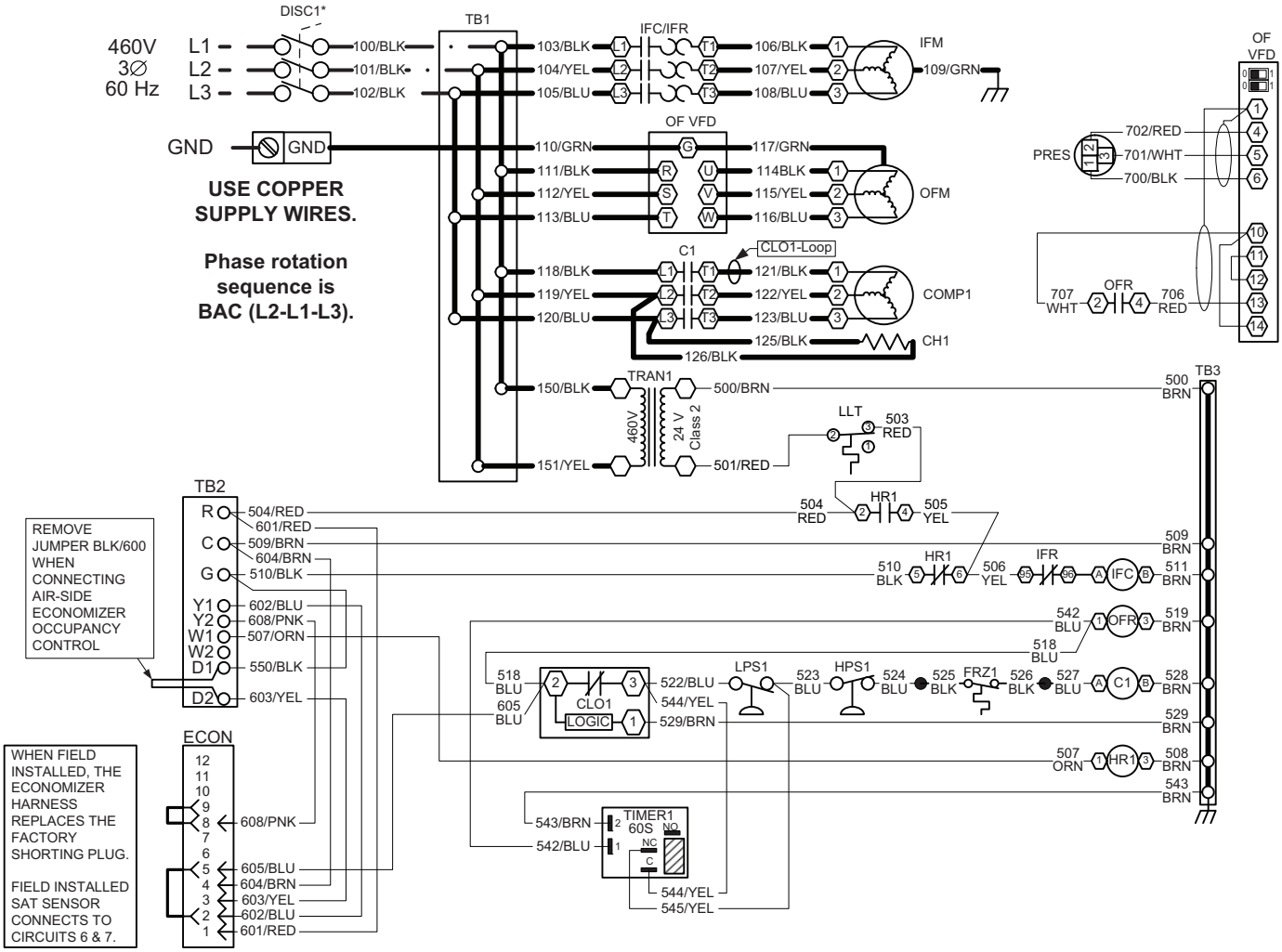

NOTE: Refer to legend and notes on page 30.

Fig. 23 — Typical Wiring Schematic with Heating (50XCA06,08, 460-v Units Shown)

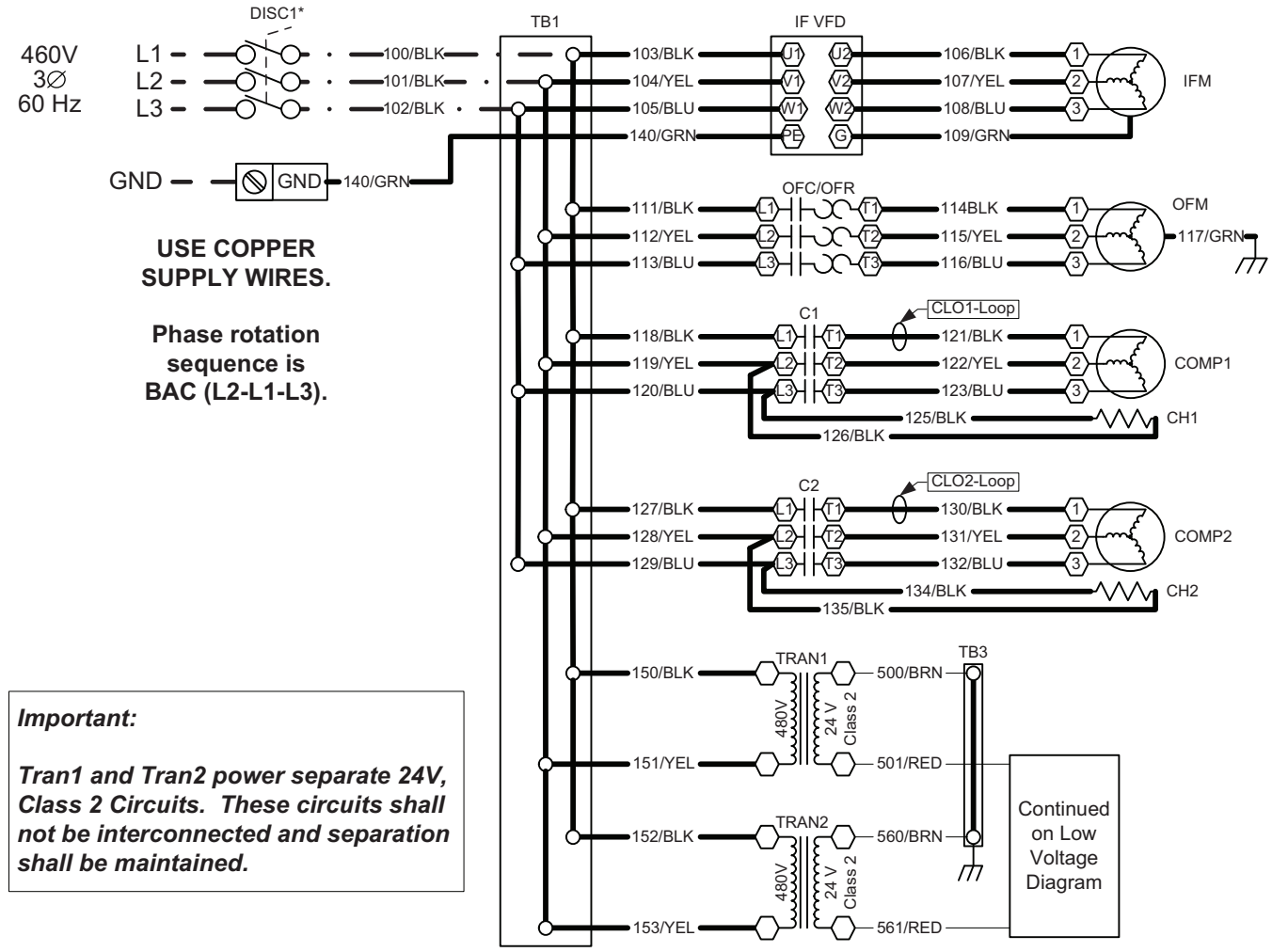

NOTE: Refer to legend and notes on page 30.

Fig. 24 — Typical Wiring Schematic (50XCA12,14, 460-v Units Shown)

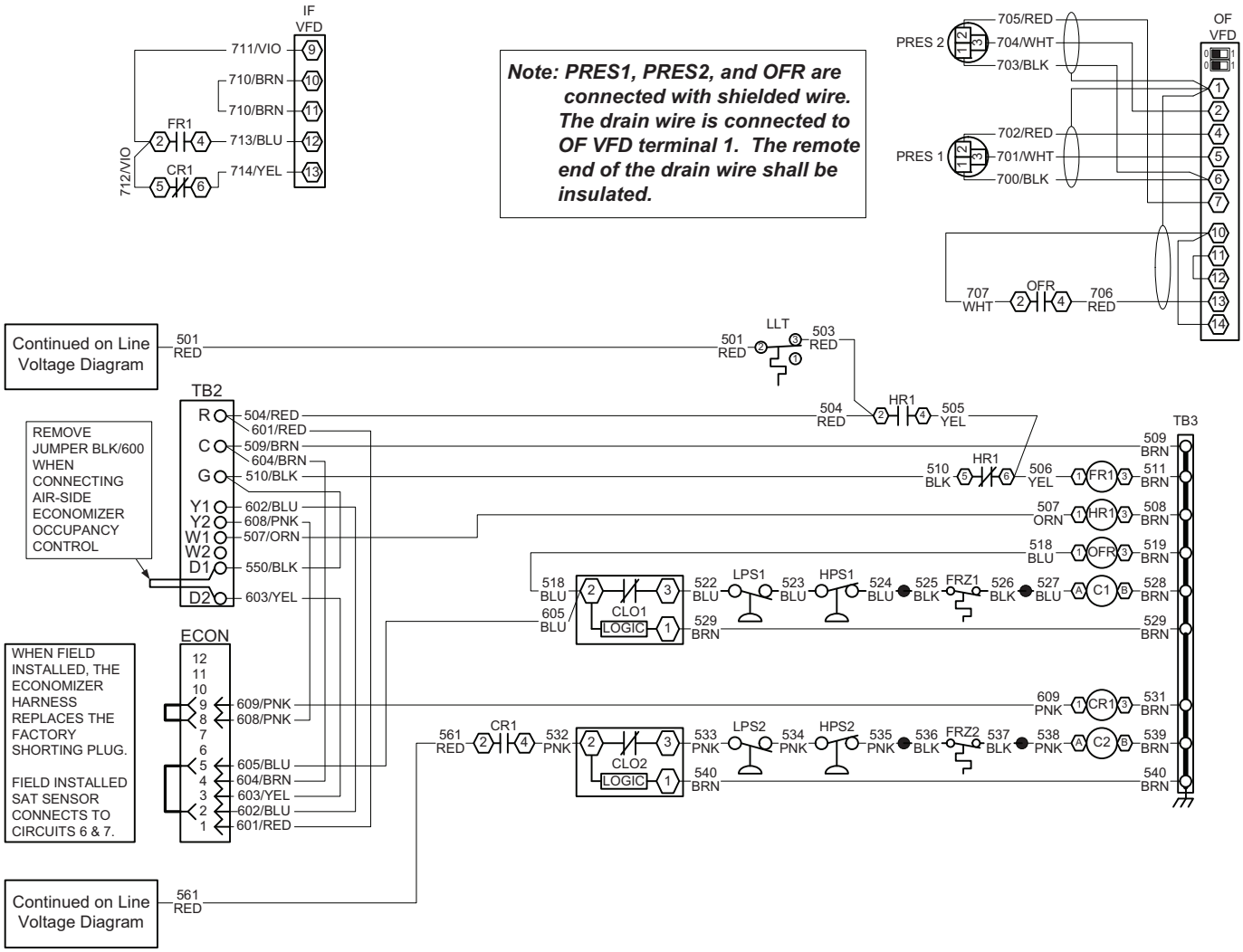

NOTE: Refer to legend and notes on page 30.

Fig. 25 — Typical Wiring Schematic for Airside Economizer

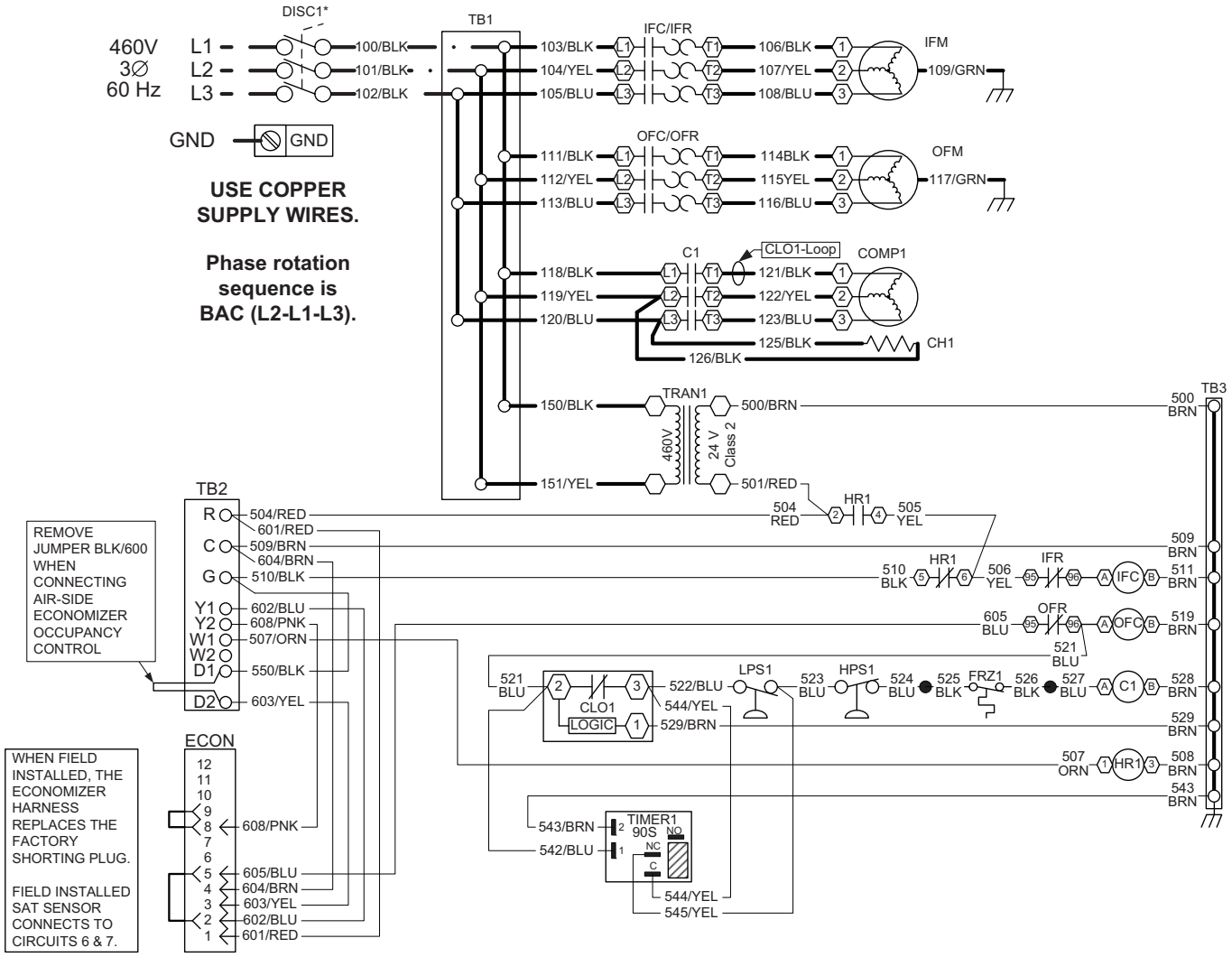

NOTE: Refer to legend and notes on page 30.

Fig. 26 — Typical Wiring Schematic for Winter Start Kit (50XCA06,08 Units)

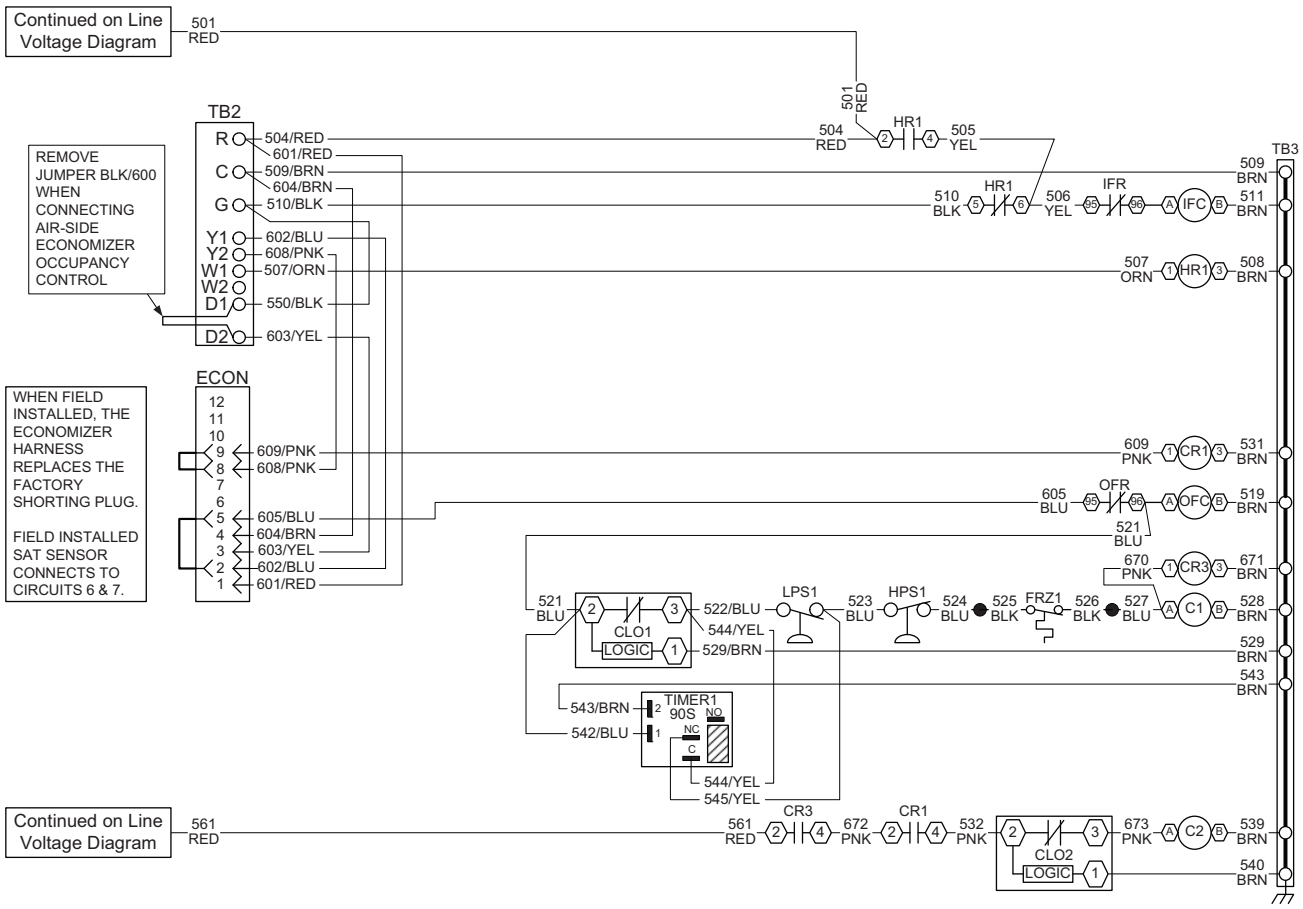

NOTE: Refer to legend and notes on page 30.

Fig. 27 — Typical Wiring Schematic for Winter Start Kit (50XCA12,14 Units)

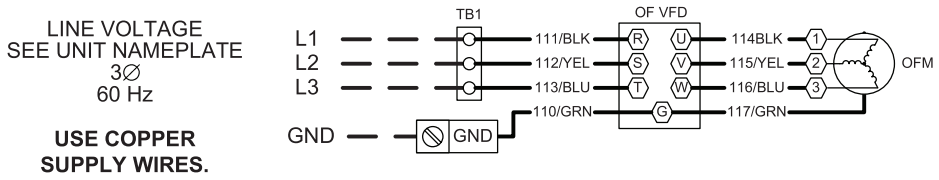

WITHOUT FACTORY INSTALLED DISCONNECT SWITCH

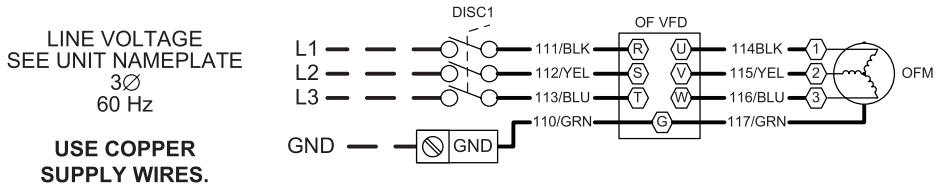

FACTORY INSTALLED DISCONNECT SWITCH OPTION

LOW VOLTAGE CONTROLS

NOTE: Refer to legend and notes on page 30.

Fig. 28 — Typical Wiring Schematic for Low Ambient Option (50XCA06,08 Units)

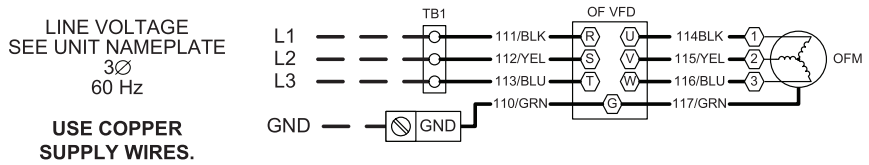

WITHOUT FACTORY INSTALLED DISCONNECT SWITCH

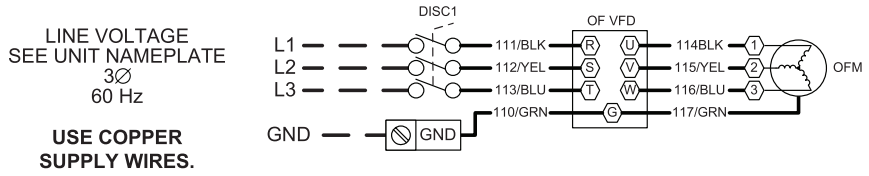

FACTORY INSTALLED DISCONNECT SWITCH OPTION

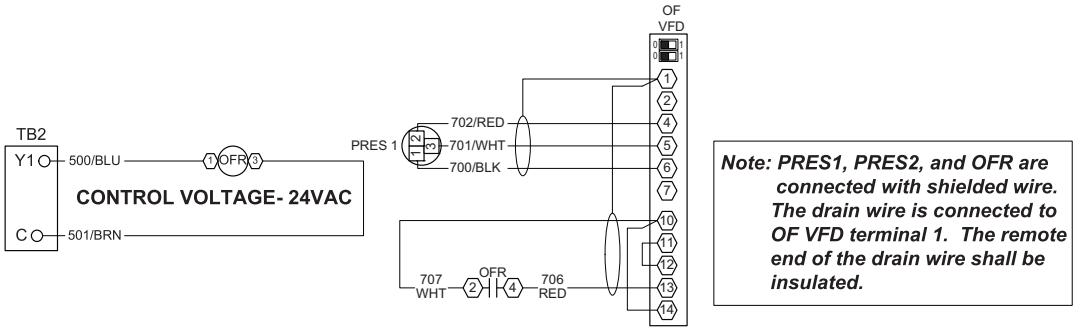

LOW VOLTAGE CONTROLS

NOTE: Refer to legend and notes on page 30.

Fig. 29 — Typical Wiring Schematic for Low Ambient Option (50XCA12,14 Units)

© Carrier Corporation 2017

START-UP CHECKLIST

(Fill out this form on Start-Up and file in job folder)

NOTE: To avoid injury to personnel and damage to equipment or property when completing the procedures listed in this start-up checklist, use good judgment, follow safe practices, and adhere to the safety considerations/information as outlined in preceding sections of this Installation, Start-Up and Service document.

I. PRELIMINARY INFORMATION

50XCA UNIT: MODEL NO. _____ SERIAL NO. _____

FIELD-INSTALLED ACCESSORIES: _____

START-UP DATE: _____

II. PRE-START-UP:

VERIFY ALL SHIPPING MATERIALS HAVE BEEN REMOVED FROM THE UNIT

IS THERE ANY SHIPPING DAMAGE? _____ IF SO, WHERE _____

_____

WILL THIS DAMAGE PREVENT UNIT START-UP? (Y/N) _____

CHECK POWER SUPPLY. DOES IT AGREE WITH UNIT? (Y/N) _____

HAS THE GROUND WIRE BEEN CONNECTED? (Y/N) _____

HAS THE CIRCUIT PROTECTION BEEN SIZED AND INSTALLED PROPERLY? (Y/N) _____

ARE THE POWER WIRES TO THE UNIT SIZED AND INSTALLED PROPERLY? (Y/N) _____

HAVE CONDENSER AND EVAPORATOR FAN AND MOTOR PULLEYS BEEN CHECKED FOR PROPER ALIGNMENT AND DO THE FAN BELTS HAVE PROPER TENSION? (Y/N) _____

HAS CORRECT FAN ROTATION OR EVAPORATOR AND CONDENSER BEEN CONFIRMED? (Y/N) _____

VERIFY CONDENSATE DRAIN HAS BEEN INSTALLED PER INSTRUCTIONS

HAS WATER BEEN PLACED IN DRAIN PAN TO CONFIRM PROPER DRAINAGE? (Y/N) _____

ARE PROPER AIR FILTERS IN PLACE AND ARE FILTERS CLEAN? (Y/N) _____

VERIFY UNIT IS INSTALLED WITHIN LEVELING TOLERANCES

CONTROLS

HAVE THERMOSTAT CONNECTIONS BEEN MADE AND CHECKED? (Y/N) _____

ARE ALL WIRING TERMINALS (including main power supply) TIGHT? (Y/N) _____

PIPING

HAVE LEAK CHECKS BEEN MADE AT COMPRESSOR, CONDENSER, EVAPORATOR, TXVs (Thermostatic Expansion Valves), SOLENOID VALVES, FILTER DRIERS, AND FUSIBLE PLUGS WITH A LEAK DETECTOR? (Y/N) _____

LOCATE, REPAIR, AND REPORT ANY LEAKS

CHECK VOLTAGE IMBALANCE

LINE-TO-LINE VOLTS: AB _____ V AC _____ V BC _____ V

(AB + AC + BC)/3 = AVERAGE VOLTAGE = _____ V

MAXIMUM DEVIATION FROM AVERAGE VOLTAGE = _____ V

VOLTAGE IMBALANCE = 100 X (MAX DEVIATION)/(AVERAGE VOLTAGE) = _____ %

IF OVER 2% VOLTAGE IMBALANCE, DO NOT ATTEMPT TO START SYSTEM!

CALL LOCAL POWER COMPANY FOR ASSISTANCE.

II. START-UP

CHECK INDOOR (EVAPORATOR) FAN SPEED AND RECORD. _____

CHECK INDOOR (CONDENSER) FAN SPEED AND RECORD. _____

AFTER AT LEAST 15 MINUTES RUNNING TIME, RECORD THE FOLLOWING MEASUREMENTS:

	CIRCUIT 1	CIRCUIT 2 (If Applicable)
SUCTION PRESSURE	_____	_____
SUCTION LINE TEMP	_____	_____
DISCHARGE PRESSURE	_____	_____
DISCHARGE LINE TEMP	_____	_____
SATURATED SUCTION TEMP	_____	_____
SATURATED CONDENSING	_____	_____
SUPERHEAT DEGREES	_____	_____
SUBCOOLING DEGREES	_____	_____
ENTERING CONDENSER-AIR TEMP	_____	_____
LEAVING CONDENSER-AIR TEMP	_____	_____
EVAP ENTERING-AIR DB (dry bulb) TEMP	_____	_____
EVAP ENTERING-AIR WB (wet bulb) TEMP	_____	_____
EVAP LEAVING-AIR DB TEMP	_____	_____
EVAP LEAVING-AIR WB TEMP	_____	_____

COMPRESSOR AMPS:

L1	_____	_____
L2	_____	_____
CONDENSER FAN AMPS:	_____	
SUPPLY FAN AMPS:	_____	

NOTES: _____

_____

_____

_____

CUT ALONG DOTTED LINE

CUT ALONG DOTTED LINE

© Carrier Corporation 2017