Installation Instructions

SAFETY CONSIDERATIONS

Centrifugal liquid chillers are designed to provide safe and reliable service when operated within design specifications. When operating this equipment, use good judgment and safety precautions to avoid damage to equipment and property or injury to personnel.

Be sure you understand and follow the procedures and safety precautions contained in the machine instructions, as well as those listed in this guide.

⚠ DANGER

DO NOT VENT refrigerant relief devices within a building. Outlet from rupture disc or relief valve must be vented outdoors in accordance with the latest edition of ANSI/ASHRAE 15 (Safety Code for Mechanical Refrigeration). The accumulation of refrigerant in an enclosed space can displace oxygen and cause asphyxiation.

PROVIDE adequate ventilation in accordance with ANSI/ASHRAE 15, especially for enclosed and low overhead spaces. Inhalation of high concentrations of vapor is harmful and may cause heart irregularities, unconsciousness, or death. Intentional misuse can be fatal. Vapor is heavier than air and reduces the amount of oxygen available for breathing. Product causes eye and skin irritation. Decomposition products are hazardous.

DO NOT USE OXYGEN to purge lines or to pressurize a machine for any purpose. Oxygen gas reacts violently with oil, grease, and other common substances.

DO NOT USE air to leak test. Use only refrigerant or dry nitrogen.

NEVER EXCEED specified test pressures. VERIFY the allowable test pressure by checking the instruction literature and the design pressures on the equipment nameplate.

DO NOT VALVE OFF any safety device.

BE SURE that all pressure relief devices are properly installed and functioning before operating any machine.

⚠ WARNING

DO NOT WELD OR FLAMECUT any refrigerant line or vessel until all refrigerant *(liquid and vapor)* has been removed from chiller. Traces of vapor should be displaced with dry air or nitrogen and the work area should be well ventilated. *Refrigerant in contact with an open flame produces toxic gases.*

DO NOT USE eyebolts or eyebolt holes to rig machine sections or the entire assembly.

DO NOT work on high-voltage equipment unless you are a qualified electrician.

DO NOT WORK ON electrical components, including control panels, switches, starters, or oil heater until you are sure ALL POWER IS OFF and no residual voltage can leak from capacitors or solid-state components.

LOCK OPEN AND TAG electrical circuits during servicing. IF WORK IS INTERRUPTED, confirm that all circuits are deenergized before resuming work.

AVOID SPILLING liquid refrigerant on skin or getting it into the eyes. USE SAFETY GOGGLES. Wash any spills from the skin with soap and water. If liquid refrigerant enters the eyes, IMMEDIATELY FLUSH EYES with water and consult a physician.

NEVER APPLY an open flame or live steam to a refrigerant cylinder. Dangerous over pressure can result. When it is necessary to heat refrigerant, use only warm (110 F [43 C]) water.

DO NOT REUSE disposable (nonreturnable) cylinders or attempt to refill them. It is DANGEROUS AND ILLEGAL. When cylinder is emptied, evacuate remaining gas pressure, loosen the collar, and unscrew and discard the valve stem. DO NOT INCINERATE.

CHECK THE REFRIGERANT TYPE before adding refrigerant to the machine. The introduction of the wrong refrigerant can cause machine damage or malfunction.

Operation of this equipment with refrigerants other than those cited herein should comply with ANSI/ASHRAE15 (latest edition). Contact Carrier for further information on use of this machine with other refrigerants.

DO NOT ATTEMPT TO REMOVE fittings, covers, etc., while machine is under pressure or while machine is running. Be sure pressure is at 0 psig (0 kPa) before breaking any refrigerant connection.

CAREFULLY INSPECT all relief valves, rupture discs, and other relief devices AT LEAST ONCE A YEAR. If machine operates in a corrosive atmosphere, inspect the devices at more frequent intervals.

DO NOT ATTEMPT TO REPAIR OR RECONDITION any relief valve when corrosion or build-up of foreign material (rust, dirt, scale, etc.) is found within the valve body or mechanism. Replace the valve.

DO NOT install relief devices in series or backwards.

USE CARE when working near or in line with a compressed spring. Sudden release of the spring can cause it and objects in its path to act as projectiles.

⚠ CAUTION

DO NOT STEP on refrigerant lines. Broken lines can whip about and release refrigerant, causing personal injury.

DO NOT climb over a machine. Use platform, catwalk, or staging. Follow safe practices when using ladders.

USE MECHANICAL EQUIPMENT (crane, hoist, etc.) to lift or move inspection covers or other heavy components. Even if components are light, use mechanical equipment when there is a risk of slipping or losing your balance.

BE AWARE that certain automatic start arrangements CAN ENGAGE THE STARTER, TOWER FAN, OR PUMPS. Open the disconnect *ahead of* the starter, tower fan, and pumps. Shut off the machine or pump before servicing equipment.

USE only repaired or replacement parts that meet the code requirements of the original equipment.

DO NOT VENT OR DRAIN waterboxes containing industrial brines, liquid, gases, or semisolids without the permission of your process control group.

DO NOT LOOSEN waterbox cover bolts until the waterbox has been completely drained.

DOUBLE-CHECK that coupling nut wrenches, dial indicators, or other items have been removed before rotating any shafts.

DO NOT LOOSEN a packing gland nut before checking that the nut has a positive thread engagement.

PERIODICALLY INSPECT all valves, fittings, and piping for corrosion, rust, leaks, or damage.

PROVIDE A DRAIN connection in the vent line near each pressure relief device to prevent a build-up of condensate or rain water.

Manufacturer reserves the right to discontinue, or change at any time, specifications or designs without notice and without incurring obligations.

CONTENTS

Page

SAFETY CONSIDERATIONS 1

INTRODUCTION 2
General 2
Job Data 2

INSTALLATION 2-26
Receiving the Machine 2
• INSPECT SHIPMENT
• IDENTIFY MACHINE
• PROVIDE MACHINE PROTECTION
Rigging the Machine 2
• RIG MACHINE ASSEMBLY
• RIG MACHINE COMPONENTS
Install Machine Supports 12
• INSTALL STANDARD ISOLATION
• INSTALL OPTIONAL ISOLATION
• INSTALL SPRING ISOLATION
Connect Piping 14
• INSTALL WATER PIPING TO HEAT EXCHANGERS
• INSTALL VENT PIPING TO RELIEF DEVICES
Make Electrical Connections 19
• CONNECT CONTROL INPUTS
• CONNECT CONTROL OUTPUTS
• CONNECT STARTER
• CARRIER COMFORT NETWORK INTERFACE
Install Field Insulation 26

INSTALLATION START-UP REQUEST CHECKLIST CL-1, CL-2

INTRODUCTION

General — The 19XR machine is factory assembled, wired, and leak tested. Installation (not by Carrier) consists primarily of establishing water and electrical services to the machine. The rigging, installation, field wiring, field piping, and insulation of waterbox covers are the responsibility of the contractor and/or customer. Carrier has no installation responsibilities for the equipment.

Job Data

Necessary information consists of:

• job contract or specifications
• machine location prints
• rigging information
• piping prints and details
• field wiring drawings
• starter manufacturer's installation details
• Carrier certified print

INSTALLATION

Receiving the Machine

INSPECT SHIPMENT

⚠ CAUTION

Do not open any valves or loosen any connections. The standard 19XR machine is shipped with a full refrigerant charge. Some machines may be shipped with a nitrogen holding charge as an option.

1. Inspect for shipping damage while machine is still on shipping conveyance. If machine appears to be damaged or has been torn loose from its anchorage, have it examined by transportation inspectors before removal. Forward claim papers directly to transportation company. *Manufacturer is not responsible for any damage incurred in transit.*
2. Check all items against shipping list. Immediately notify the nearest Carrier representative if any item is missing.
3. To prevent loss or damage, leave all parts in original packages until beginning installation. All openings are closed with covers or plugs to prevent dirt and debris from entering machine components during shipping. A full operating oil charge is placed in the oil sump before shipment.

IDENTIFY MACHINE — The machine model number, serial number, and heat exchanger sizes are stamped on machine identification nameplate (Fig. 1 and 2). Check this information against shipping papers and job data.

PROVIDE MACHINE PROTECTION — Protect machine and starter from construction dirt and moisture. Keep protective shipping covers in place until machine is ready for installation.

If machine is exposed to freezing temperatures after water circuits have been installed, open waterbox drains and remove all water from cooler and condenser. Leave drains open until system is filled.

Rigging the Machine — The 19XR machine can be rigged as an entire assembly. It also has flanged connections that allow the compressor, cooler, and condenser sections to be separated and rigged individually.

RIG MACHINE ASSEMBLY — See rigging instructions on label attached to machine. Also refer to rigging guide (Fig. 3), physical data in Fig. 4, and Tables 1-5. *Lift machine only from the points indicated in rigging guide.* Each lifting cable or chain must be capable of supporting the entire weight of the machine.

⚠ WARNING

Lifting machine from points other than those specified may result in serious damage to the unit and personal injury. Rigging equipment and procedures must be adequate for machine weight. See Tables 1-5 for machine weights.

NOTE: These weights are broken down into component sections for use when installing the unit in sections. For the complete machine weight, add all component sections and refrigerant charge together. See Tables 1-5 for machine component weights.

IMPORTANT: Make sure that rigging cable is over the rigging bar before lifting.

19XR 52 51 473 CQ H 62 –

Description

19XR — High Efficiency Hermetic Centrifugal Liquid Chiller

Cooler Size

30-32 (Frame 3, Length:12 ft)
35-37 (Frame 3, Length:14 ft)
40-42 (Frame 4, Length:12 ft)
45-47 (Frame 4, Length:14 ft)
50-52 (Frame 5, Length:12 ft)
55-57 (Frame 5, Length:14 ft)
60-62 (Frame 6, Length:12 ft)
65-67 (Frame 6, Length:14 ft)

Condenser Size

30-32 (Frame 3, Length:12 ft)
35-37 (Frame 3, Length:14 ft)
40-42 (Frame 4, Length:12 ft)
45-47 (Frame 4, Length:14 ft)
50-52 (Frame 5, Length:12 ft)
55-57 (Frame 5, Length:14 ft)
60-62 (Frame 6, Length:12 ft)
65-67 (Frame 6, Length:14 ft)

Compressor Code

Special Order Indicator

– — Standard
S — Special Order

Motor Voltage Code

Code	Volts-Phase-Hertz
60	200-3-60
61	230-3-60
62	380-3-60
63	416-3-60
64	460-3-60
65	575-3-60
66	2400-3-60
67	3300-3-60
68	4160-3-60
69	6900-3-60
50	230-3-50
51	346-3-50
52	400-3-50
53	3000-3-50
54	3300-3-50
55	6300-3-50

Motor Efficiency Code

H — High Efficiency
S — Standard Efficiency

Motor Code

CD	DB
CE	DC
CL	DD
CM	DE
CN	DF
CP	DG
CQ	DH
	DJ

Fig. 1 — Model Number Identification

FRONT TOP VIEW

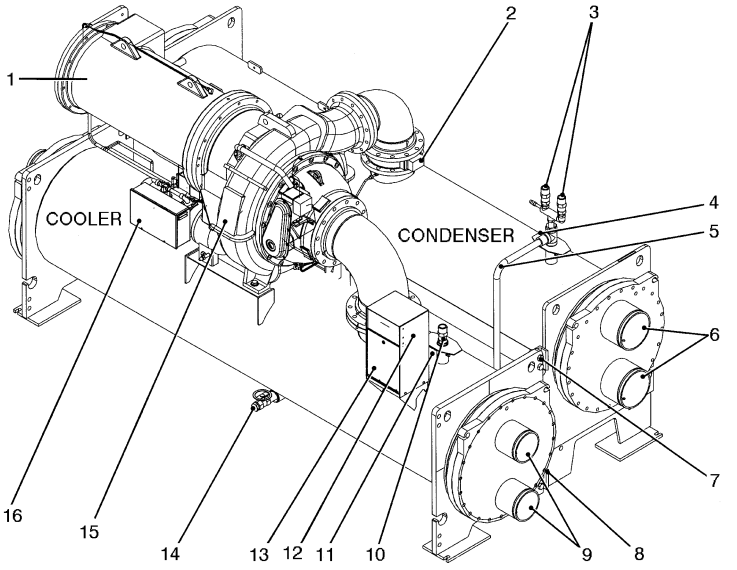

1 — Motor Section
2 — Discharge Isolation Valve
3 — Condensor Safety Relief Valves
4 — Condensor Pumpdown Valve (Hidden)
5 — Optional Hot Gas Bypass Line (Typical)
6 — Condenser Water Nozzles
7 — Take-Apart Rabbet-Fit Connector (Upper)
8 — Take-Apart Rabbet-Fit Connector (Lower)
9 — Cooler Water Nozzles (Typical)
10 — Cooler Safety Relief Valve
11 — Cooler Pumpdown Valve (Hidden)
12 — Machine Identification Nameplate
13 — Control Center
14 — Refrigerant Charging Valve
15 — Compressor Section
16 — Auxiliary Power Panel

BOTTOM REAR VIEW

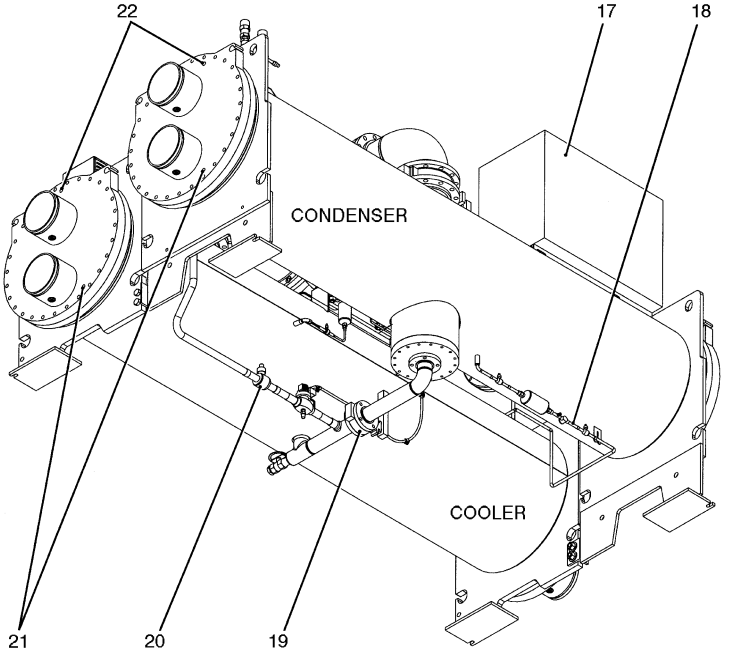

17 — Unit-Mounted Starter (Optional)
18 — Refrigerant Cooling Line
19 — Cooler Isolation Valve
20 — Hot Gas Bypass Isolation Valve
21 — Waterbox Drains
22 — Waterbox Vents

Fig. 2 — Typical 19XR Installation

COMPRESSOR FRAME SIZE*	COOLER SIZE	MAXIMUM WEIGHT (lb)	VESSEL LENGTH	DIM. "A"	CHAIN LENGTH		
					"B"	"C"	"D"
3	40-42	29,700	12′	5′- 9″	12′-8″	12′-8″	13′-4″
	45-47	31,800	14′	6′-10″	13′-1″	13′-2″	13′-8″
	50-52	31,200	12′	5′- 9″	12′-7″	12′-9″	13′-5″
	55-57	33,200	14′	6′-10″	13′-1″	13′-3″	13′-9″
4	50-52	32,530	12′	5′- 9″	13′-1″	12′-9″	13′-4″
	55-57	34,230	14′	6′- 2″	13′-7″	13′-1″	14′-4″
	60-62	34,950	12′	5′- 9″	13′-1″	12′-9″	13′-4″
	65-67	36,950	14′	6′- 2″	13′-7″	13′-1″	14′-4″

*The first digit of the 3-digit compressor code indicates the frame size of the compressor.

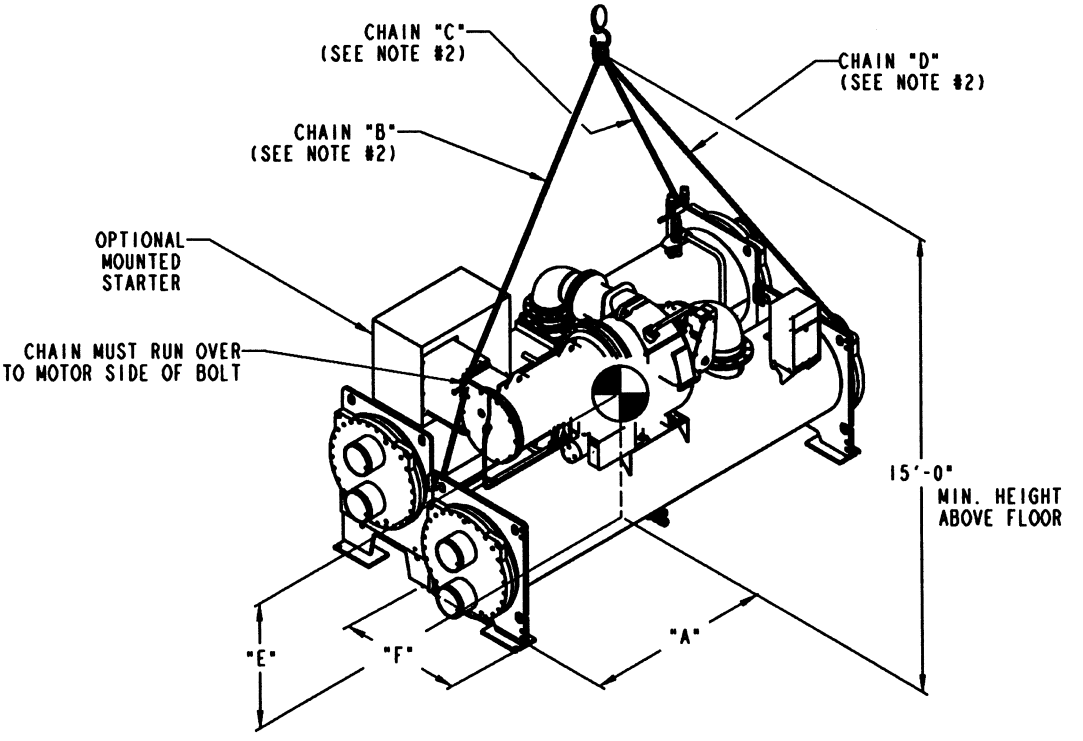

MACHINE RIGGING GUIDE

NOTES:
1. Each cable must be capable of supporting the entire weight of the machine. See chart for maximum weights.
2. Chain lengths shown are typical for 15′ lifting height. Some minor adjustments may be required.

Fig. 3 — Machine Rigging Guide

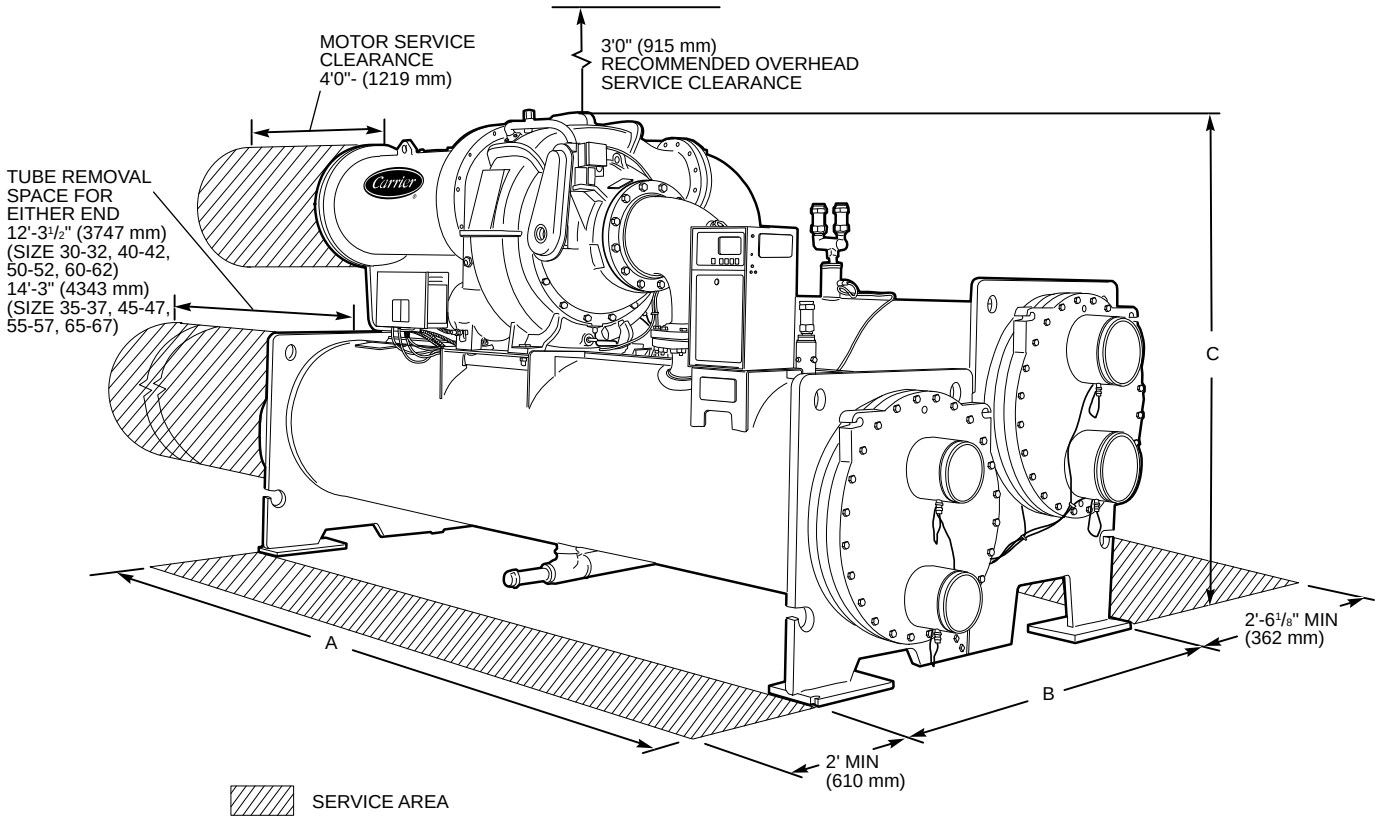

HEAT EXCHANGER SIZE	A (Length, with Nozzle-in-Head Waterbox)				B (Width)		C (Height)	
	2-Pass*		1 or 3 Pass†					
	ft-in.	mm	ft-in.	mm	ft-in.	mm	ft-in.	mm
30 to 32	14-0⅞	4290	14-7⅜	4468	6-4⅜	1941	7-2 3/16	2190
35 to 37	15-9⅜	4811	16-4⅜	4989	6-4⅜	1941	7-2 3/16	2190
40 to 42	14-0⅞	4290	14-7⅞	4468	6-4⅜	1941	7-2 3/16	2190
45 to 47	15-9⅜	4811	16-4⅜	4989	6-4⅜	1941	7-2 3/16	2190
50 to 52	14-0⅞	4290	14-7⅞	4468	6-8⅞	2055	7-2 3/16	2190
55 to 57	15-9⅜	4811	16-4⅜	4989	6-8⅞	2055	7-2 3/16	2190
60 to 62	14-0⅞	4290	14-7⅞	4468	7-0	2123	7-4 3/16	2240
65 to 67	15-9⅜	4811	16-4⅜	4989	7-0	2123	7-4 3/16	2240

HEAT EXCHANGER SIZE	A (Length, Marine Waterbox — not shown)			
	2-Pass*		1 or 3 Pass (Cooler Only)	
	ft-in.	mm	ft-in.	mm
30 to 32	15- 2⅞	4642	16-11⅞	5179
35 to 37	16-11⅜	5166	18- 8⅜	5700
40 to 42	15- 2⅞	4642	16-11⅞	5179
45 to 47	16-11⅜	5166	18- 8⅜	5700
50 to 52	15- 2⅞	4642	16-11⅞	5179
55 to 57	16-11⅜	5166	18- 8⅜	5700
60 to 62	15- 2⅞	4642	16-11⅞	5179
65 to 67	16-11⅜	5166	18- 8⅜	5700

FRAME SIZE	NOZZLE SIZE (in.) (Nominal Pipe Size)					
	Cooler			Condenser		
	1-Pass	2-Pass	3-Pass	1-Pass	2-Pass	3-Pass
3	10	8	6	10	8	6
4	10	8	6	10	8	6
5	10	8	6	10	10	8
6	10	10	8	10	10	8

*Assumes both cooler and condenser nozzles on same end of chiller.
†1 or 3 pass length applies if either (or both) cooler or condenser is a 1 or 3 pass design.

NOTES:
1. Service access should be provided per American Society of Heating, Refrigeration, and Air Conditioning Engineers (ASHRAE) 15, latest edition, National Fire Protection Association (NFPA) 70, and local safety code.
2. Allow at least 3 ft (915 mm) overhead clearance for service rigging.
3. Certified drawings available upon request.

Fig. 4 — 19XR Dimensions

Table 1 — 19XR Compressor Weights

MOTOR CODE	ENGLISH Total Compressor Weight* (lb)		SI Total Compressor Weight* (kg)	
	60 Hz	50 Hz	60 Hz	50 Hz
CD	4658	4745	2113	2152
CE	4684	4770	2125	2164
CL	4709	4841	2136	2196
CM	4736	4867	2148	2208
CN	4750	4882	2155	2214
CP	4805	4897	2180	2221
CQ	4873	4897	2210	2221
DB	6043	6089	2741	2762
DC	6069	6155	2753	2792
DD	6147	6193	2788	2809
DE	6155	6282	2792	2850
DF	6205	6343	2815	2877
DG	6295	6397	2855	2902
DH	6343	6799	2877	3084
DJ	6397	6909	2902	3134

*Compressor weight is comprised of compressor, stator, rotor, end bell, suction elbow, and discharge elbow.

NOTE: For medium voltage motors (over 600 v), add 490 lb (222 kg).

Table 2 — 19XR Component Weights

COMPONENT	FRAME 3 COMPRESSOR		FRAME 4 COMPRESSOR	
	lb	kg	lb	kg
Suction Elbow	54	24	175	79
Discharge Elbow	46	21	157	71
Control Cabinet*	30	14	30	14
Optional Unit-Mounted Starter†	800	363	800	363
Optional Isolation Valves	115	52	115	52

*Included in total cooler weight.
†Weight of optional factory-mounted starter is not included and must be added to the heat exchanger weight.

Table 3 — 19XR Heat Exchanger Data

CODE	ENGLISH Dry (Rigging) Weight (lb)*		ENGLISH Machine Charge				SI Dry (Rigging) Weight (kg)*		SI Machine Charge			
	Cooler Only	Condenser Only	Refrigerant Weight		Water Volume (gal)		Cooler Only	Condenser Only	Refrigerant Weight		Water Volume (L)	
			Cooler	Condenser	Cooler	Condenser			Cooler	Condenser	Cooler	Condenser
30	3587	4204	350	280	55	55	1627	1907	159	127	210	210
31	3769	4409	420	280	64	65	1709	2000	190	127	241	246
32	3952	4610	490	280	72	74	1792	2091	222	127	271	282
35	3899	4591	400	330	61	62	1768	2082	181	150	232	233
36	4107	4825	480	330	70	72	1863	2188	218	150	266	273
37	4314	5054	550	330	80	83	1956	2292	249	150	301	314
40	5898	6071	560	280	89	96	2675	2753	254	127	338	365
41	6080	6268	630	280	97	106	2757	2843	286	127	368	400
42	6244	6461	690	280	105	114	2832	2930	313	127	396	433
45	6353	6636	640	330	98	106	2881	3010	290	150	372	403
46	6561	6861	720	330	108	117	2976	3112	327	150	407	442
47	6748	7080	790	330	116	127	3060	3211	358	150	438	481
50	7015	7293	750	400	115	128	3181	3307	340	181	435	483
51	7262	7490	840	400	126	137	3293	3397	381	181	477	518
52	7417	7683	900	400	133	146	3364	3484	408	181	502	552
55	7559	7990	850	490	127	142	3428	3624	385	222	481	536
56	7839	8214	960	490	139	152	3555	3725	435	222	527	575
57	8016	8434	1020	490	147	162	3635	3825	463	222	557	613
60	8270	8286	960	420	144	159	3751	3758	435	190	546	601
61	8462	8483	1040	420	153	168	3838	3847	472	190	578	636
62	8617	8676	1090	420	160	177	3908	3935	494	190	604	669
65	8943	9204	1100	510	160	176	4056	4174	499	231	605	668
66	9161	9428	1180	510	169	187	4155	4276	535	231	641	707
67	9338	9648	1250	510	177	197	4235	4376	567	231	671	745

*Rigging weights are for standard tubes of standard wall thickness (Turbo-B3 and Spikefin 2, 0.025-in. [0.635 mm] wall).

NOTES:
1. Cooler includes the control panel (LID), suction elbow, and ½ the distribution piping weight.
2. Condenser includes float valve and sump, discharge elbow, and ½ the distribution piping weight.
3. For special tubes refer to the 19XR Computer Selection Program.
4. All weights for standard 2 pass NIH (nozzle-in-head) design.

Table 4 — 19XR Additional Data for Marine Waterboxes*

HEAT EXCHANGER FRAME, PASS	ENGLISH			SI		
	Psig	Rigging Weight (lb)	Water Volume (gal)	kPa	Rigging Weight (kg)	Water Volume (L)
Frame 3, 1 and 3 Pass	150	730	84	1034	331	317
Frame 3, 2 Pass	150	365	42	1034	166	159
Frame 4, 1 and 3 Pass	150	1060	123	1034	481	465
Frame 4, 2 Pass	150	530	61	1034	240	231
Frame 5, 1 and 3 Pass	150	1240	139	1034	562	526
Frame 5, 2 Pass	150	620	69	1034	281	263
Frame 6, 1 and 3 Pass	150	1500	162	1034	680	612
Frame 6, 2 Pass	150	750	81	1034	340	306
Frame 3, 1 and 3 Pass	300	860	84	2068	390	317
Frame 3, 2 Pass	300	430	42	2068	195	159
Frame 4, 1 and 3 Pass	300	1210	123	2068	549	465
Frame 4, 2 Pass	300	600	61	2068	272	231
Frame 5, 1 and 3 Pass	300	1380	139	2068	626	526
Frame 5, 2 Pass	300	690	69	2068	313	263
Frame 6, 1 and 3 Pass	300	1650	162	2068	748	612
Frame 6, 2 Pass	300	825	81	2068	374	306

*Add to heat exchanger data for total weights or volumes.

NOTE: Weight shown is total for cooler and condenser. Cooler and condenser of the same frame size are of equal weight.

Table 5 — 19XR Waterbox Cover Weights

ENGLISH (lb)

HEAT EXCHANGER	WATERBOX DESCRIPTION	FRAME 3		FRAME 4		FRAME 5		FRAME 6	
		Standard Nozzles	Flanged	Standard Nozzles	Flanged	Standard Nozzles	Flanged	Standard Nozzles	Flanged
COOLER/CONDENSER	NIH, 1 Pass Cover, 150 psig	320	350	485	521	616	652	802	838
	NIH, 2 Pass Cover, 150 psig	320	350	487	540	590	663	770	843
	NIH, 3 Pass Cover, 150 psig	300	340	504	520	629	655	817	843
	NIH/MWB End Cover or MWB 1*, 2, or 3* Pass Cover, 150 psig	300	300	379	379	428	428	583	583
	MWB End Cover or MWB 1*, 2 or 3* Pass Cover, 300 psig	400	400	569	569	713	713	833	833

SI (kg)

HEAT EXCHANGER	WATERBOX DESCRIPTION	FRAME 3		FRAME 4		FRAME 5		FRAME 6	
		Standard Nozzles	Flanged	Standard Nozzles	Flanged	Standard Nozzles	Flanged	Standard Nozzles	Flanged
COOLER/CONDENSER	NIH, 1 Pass Cover, 150 psig	145	159	220	236	279	296	364	380
	NIH, 2 Pass Cover, 150 psig	145	159	221	245	268	301	349	382
	NIH, 3 Pass Cover, 150 psig	140	154	229	236	285	297	371	381
	NIH/MWB End Cover or MWB 1*, 2, or 3* Pass Cover, 150 psig	136	136	172	172	194	194	264	264
	MWB End Cover or MWB 1*, 2 or 3* Pass Cover, 300 psig	181	181	258	258	323	323	378	378

LEGEND

NIH — Nozzle-in-Head
MWB — Marine Waterbox

*Cooler only.

NOTE: Weight for NIH 2-pass cover, 150 psig, are included in heat exchanger weights shown on page 7.

RIG MACHINE COMPONENTS — Refer to instructions below, Fig. 5-8, and Carrier Certified Prints for machine component disassembly.

IMPORTANT: Only a qualified service technician should perform this operation.

⚠ WARNING

Do not attempt to disconnect flanges while the machine is under pressure. Failure to relieve pressure can result in personal injury or damage to the unit.

⚠ CAUTION

Before rigging the compressor, disconnect all wires entering the power panel.

NOTE: If the cooler and condenser vessels must be separated, the heat exchangers should be kept level by placing a support plate under the tube sheets. The support plate will also help to keep the vessels level and aligned when the vessels are bolted back together.

NOTE: Wiring must also be disconnected. Label each wire before removal (see Carrier Certified Prints). In order to disconnect the starter from the machine, remove wiring for the oil pump, oil heater, control wiring at the power panel, and the main motor leads at the starter lugs.

Remove all transducer and sensor wires at the sensor. Clip all wire ties necessary to pull heat exchangers apart.

To separate Cooler and Condenser:

1. Place a support plate under each tube sheet to keep each vessel level (Fig. 5, Item 6).
2. Cut the refrigerant motor cooling line at the location shown (Fig. 5, Item 7).

3. Disconnect the compressor discharge elbow at the compressor (Fig. 6, Item 3).
4. Cut the hot gas bypass line at the location shown (Fig. 5, Item 1).
5. Unbolt the cooler liquid feed line at the location shown (Fig. 5, Item 10).
6. Cover all openings.
7. Disconnect all wires and cables that cross from the cooler side of the machine to the condenser side, including:
   a. temperature sensor cable at the waterbox (Fig. 8, Item 1)
   b. condenser transducer cable at the transducer (Fig. 6, Item 4)
   c. motor power wires at the starter (Fig. 5, Item 4)
   d. wires and cable housings at the power panel that cross from the starter to the power panel (Fig. 6, Item 2).
8. Disconnect the rabbet-fit connectors on the tube sheets (Fig. 5, Item 5).
9. Rig the vessels apart.

To Separate the Compressor from the Cooler:

1. Unbolt the compressor suction elbow at the cooler flange (Fig. 5, Item 2).
2. Cut the refrigerant motor cooling line at the location shown (Fig. 5, Item 7).
3. Disconnect the motor refrigerant return line (Fig. 5, Item 8).
4. Disconnect the following:
   a. compressor oil sump temperature sensor cable (Fig. 7, Item 4)
   b. bearing temperature sensor cable (Fig. 7, Item 2).
   c. motor temperature sensor cable (Fig. 7, Item 1)
   d. wires and cable housings that cross from the power panel to the starter and control panel (Fig. 6, Item 2)
   e. discharge temperature sensor cable (Fig. 7, Item 6)
   f. compressor oil sump pressure cable (Fig. 7, Item 3)
   g. compressor oil discharge pressure cable (Fig. 7, Item 5)
   h. guide vane actuator cable (Fig. 6, Item 1).
5. Disconnect the flared fitting for the oil reclaim line (Fig. 5, Item 3).
6. Unbolt the compressor discharge elbow (Fig. 6, Item 3).
7. Cover all openings.
8. Disconnect motor power cables at the starter lugs (Fig. 5, Item 4).
9. Unbolt the compressor mounting from the cooler (Fig. 5, Item 9).
10. Rig the compressor.

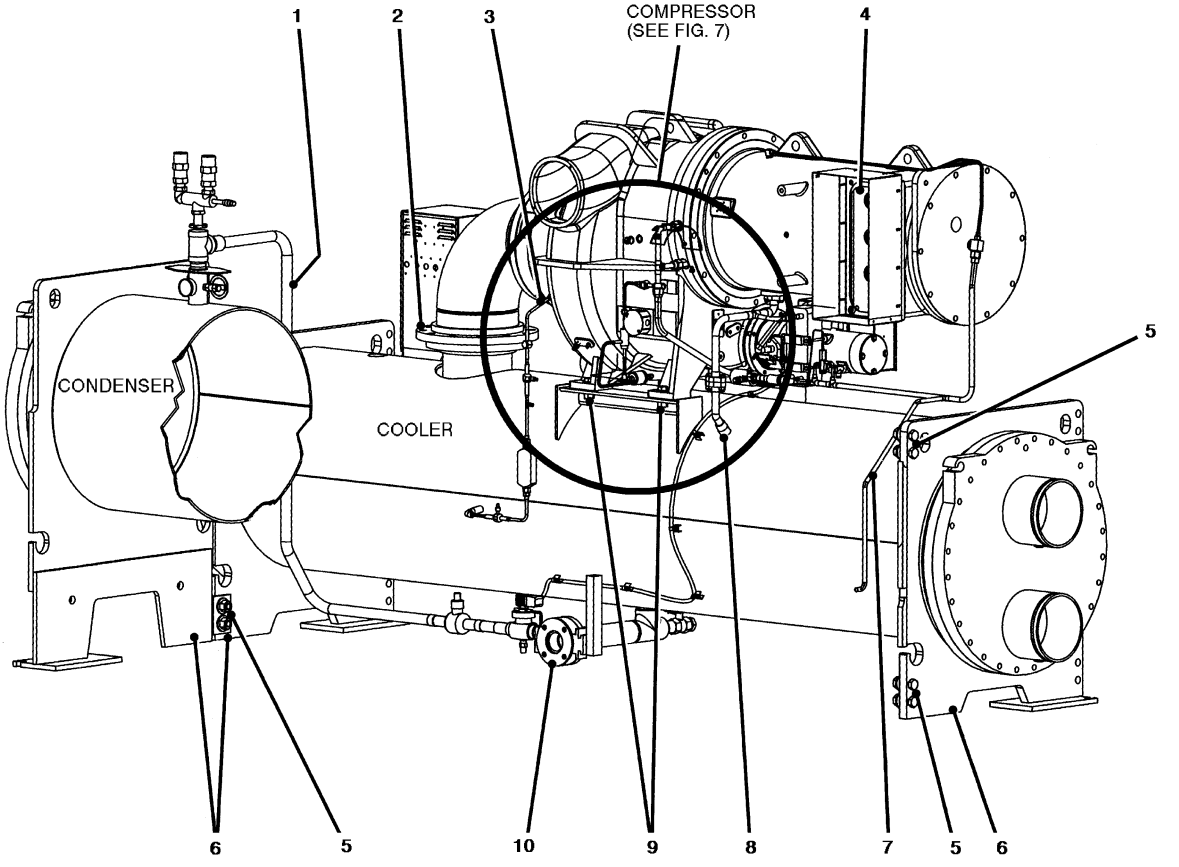

1 — Optional Hot Gas Bypass (Cut)
2 — Compressor Suction Elbow (Unbolt)
3 — Oil Reclaim Line (Unbolt)
4 — Starter Connector (Unbolt)
5 — Vessel Connectors (Unbolt)
6 — Tube Sheet
7 — Refrigerant Motor Cooling Line (Cut)
8 — Motor Drain (Unbolt)
9 — Compressor Mounting (Unbolt)
10 — Cooler Liquid Feed Line (Unbolt)

Fig. 5 — Cooler, Side View

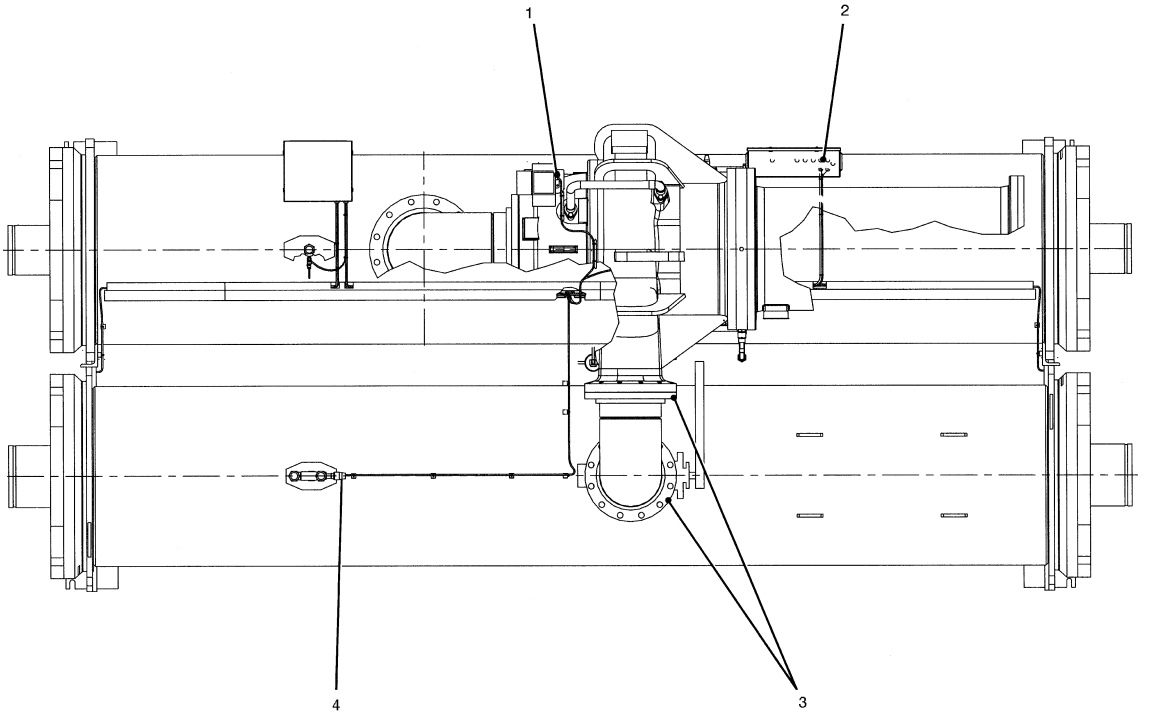

1 — Guide Vane Actuator Cable
2 — Power Panel to Starter Cables (Oil Pump Power, Control Power, and Communication)
3 — Compressor Discharge Elbow Joints
4 — Condenser Transducer Cable

Fig. 6 — 19XR Chiller Top View

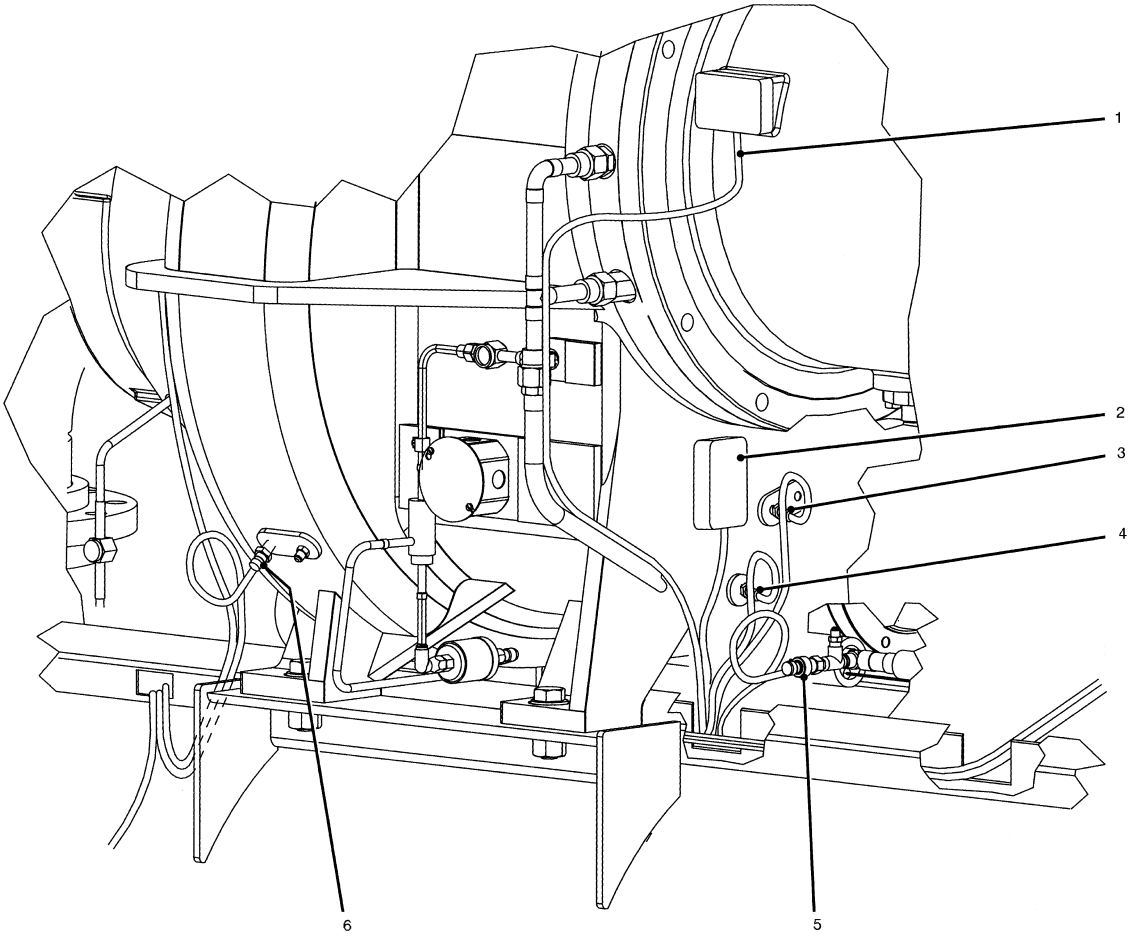

1 — Motor Temperature Sensor Cable
2 — Bearing Temperature Sensor Cable Connection (Inside Box)
3 — Compressor Oil Sump Pressure Cable
4 — Compressor Oil Sump Temperature Sensor Cable
5 — Compressor Oil Discharge Pressure Cable
6 — Discharge Temperature Sensor Cable

Fig. 7 — Compressor Detail

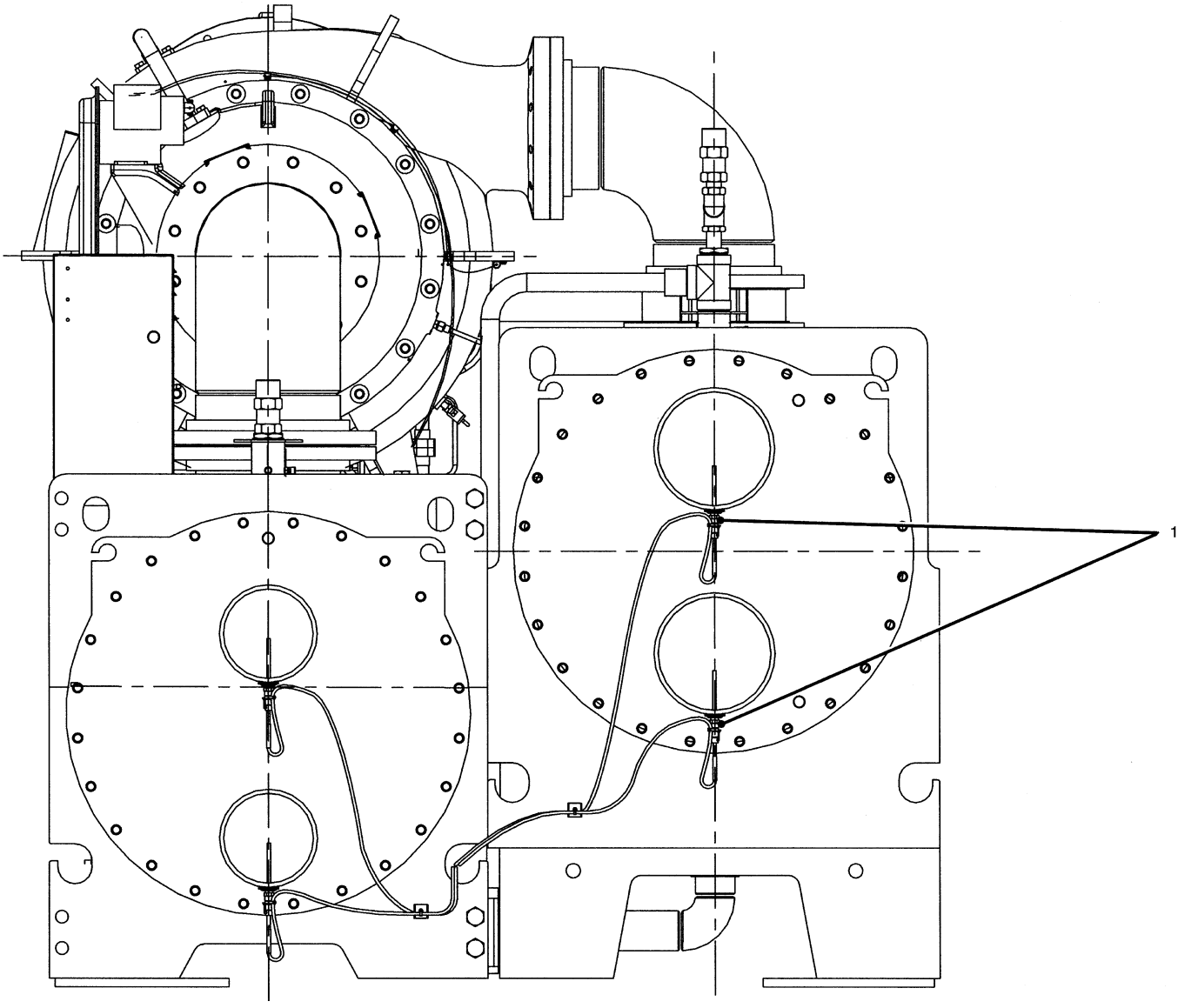

1 — Water Temperature Sensor Cables

Fig. 8 — Chiller End View

To Rig Compressor

NOTE: The motor end of the 19XR compressor is heavy and will tip backwards unless these directions are followed:

1. Cut two 4 in. × 6 in. wooden beams to the same length as the compressor.
2. Drill holes into the beams and bolt them to the base of the compressor.

Additional Notes

1. Use silicon grease on new O-rings when refitting.
2. Use gasket sealant on new gaskets when refitting.
3. Cooler and condenser vessels may be rigged vertically. Rigging should be fixed to all 4 corners of the tube sheet.

Install Machine Supports

INSTALL STANDARD ISOLATION — Figures 9 and 10 show the position of support plates and shear flex pads, which together form the standard machine support system.

INSTALL ACCESSORY ISOLATION (if required) — Uneven floors or other considerations may dictate the use of accessory soleplates (supplied by Carrier for field installation) and leveling pads. Refer to Fig. 9 and 11.

Level machine by using jacking screws in isolation soleplates. Use a level at least 24-in. (600 mm) long.

For adequate and long lasting machine support, proper grout selection and placement is essential. Carrier recommends that only pre-mixed, epoxy type, non-shrinking grout be used for machine installation. Follow manufacturer's instructions in applying grout.

1. Check machine location prints for required grout thickness.
2. Carefully wax jacking screws for easy removal from grout.
3. Grout must extend above the base of the soleplate and there must be no voids in grout beneath the plates.
4. Allow grout to set and harden, per manufacturer's instructions, before starting machine.
5. Remove jacking screws from leveling pads after grout has hardened.

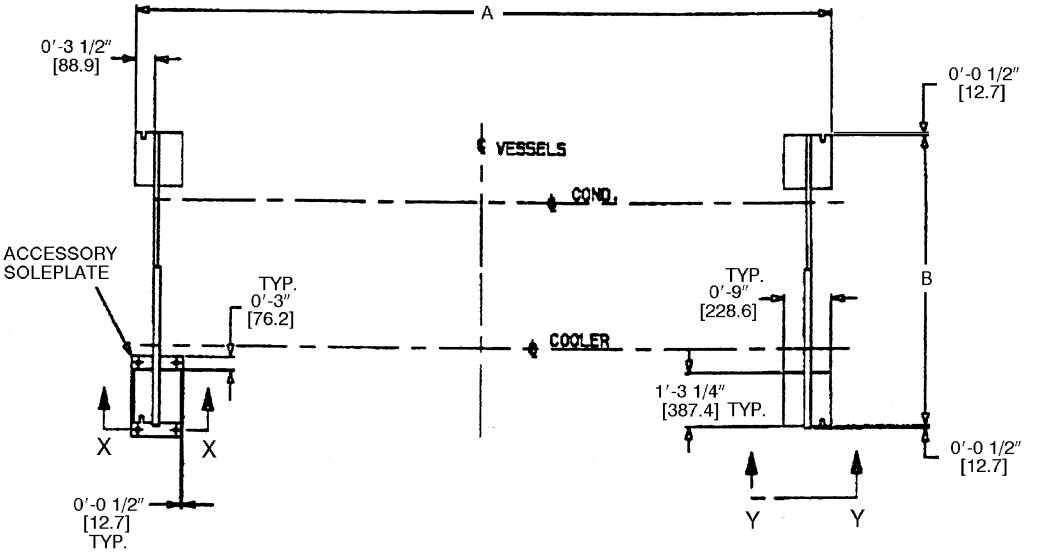

HEAT EXCHANGER SIZE	DIMENSIONS (ft-in.)	
	A	B
30-32	12-10¾	5-4¾
35-37	14- 7¼	5-4¾
40-42	12-10¾	6-0
45-47	14- 7¼	6-0
50-52	12-10¾	6-5½
55-57	14- 7¼	6-5½
60-62	12-10¾	6-9½
65-67	14- 7¼	6-9½

Fig. 9 — 19XR Machine Footprint

INSTALL SPRING ISOLATION — Spring isolation may be purchased as an accessory from Carrier for field installation. It may also be field supplied and installed. Spring isolators may be placed directly under machine support plates or located under machine soleplates. See Fig. 12. Consult job data for specific arrangement. Low profile spring isolation assemblies can be field supplied to keep the machine at a convenient working height.

Obtain specific details on spring mounting and machine weight distribution from job data. Also, check job data for methods to support and isolate pipes that are attached to spring isolated machines.

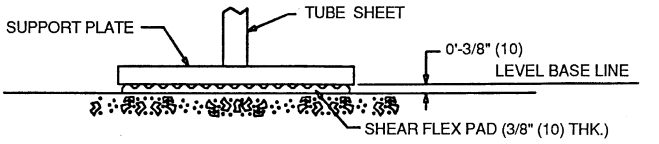

VIEW Y-Y

NOTES:
1. Dimensions in ( ) are in millimeters.
2. Isolation package includes 4 shear flex pads.

Fig. 10 — Standard Isolation

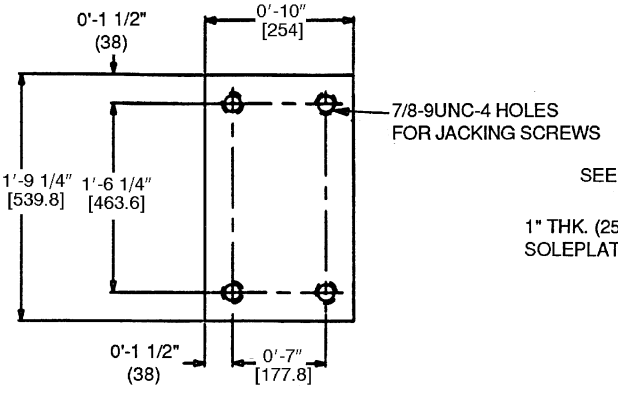

ACCESSORY SOLEPLATE DETAIL

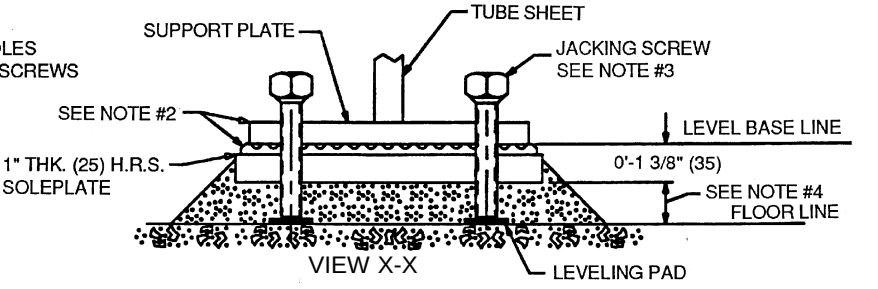

VIEW X-X

LEGEND

HRS — Hot Rolled Steel

NOTES:
1. Dimensions in ( ) are in millimeters.
2. Accessory (Carrier supplied, field installed) soleplate package includes 4 soleplates, 16 jacking screws and leveling pads.
3. Jacking screws to be removed after grout has set.
4. Thickness of grout will vary, depending on the amount necessary to level chiller. Use only pre-mixed non-shrinking grout, Celcote HT-648 or Master Builders 636, 0′-1½″ (38.1) to 0′-2¼″ (57) thick.

Fig. 11 — Accessory Isolation

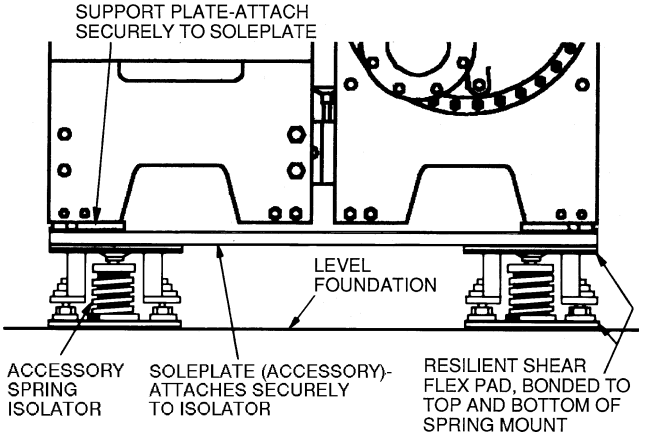

NOTE: The accessory spring isolators are supplied by Carrier for installation in the field.

Fig. 12 — 19XR Accessory Spring Isolation (Shown with Accessory Soleplates)

Connect Piping

INSTALL WATER PIPING TO HEAT EXCHANGERS — Install piping using job data, piping drawings, and procedures outlined below. A typical piping installation is shown in Fig. 13.

⚠ CAUTION

Factory-supplied insulation is not flammable but can be damaged by welding sparks and open flame. Protect insulation with a wet canvas cover.

⚠ CAUTION

Remove chilled and condenser water sensors before welding connecting piping to water nozzles. Refer to Fig. 2. Replace sensors after welding is complete.

1. Offset pipe flanges to permit removal of waterbox cover for maintenance and to provide clearance for pipe cleaning. No flanges are necessary with marine waterbox option; however, water piping should not cross in front of the waterbox or access will be blocked.
2. Provide openings in water piping for required pressure gages and thermometers. For thorough mixing and temperature stabilization, wells in the leaving water pipe should extend inside pipe at least 2 in. (50 mm).
3. Install air vents at all high points in piping to remove air and prevent water hammer.
4. Install pipe hangers where needed. Make sure no weight or stress is placed on waterbox nozzles or flanges.
5. Water flow direction must be as specified in Fig. 14.

   NOTE: Entering water is always the lower of the 2 nozzles. Leaving water is always the upper nozzle for cooler or condenser.
6. Water flow switches must be of vapor-tight construction and must be installed on top of pipe in a horizontal run and at least 5 pipe diameters from any bend.
7. Install waterbox vent and drain piping in accordance with individual job data. All connections are ¾-in. FPT.
8. Install waterbox drain plugs in the unused waterbox drains and vent openings.
9. Install optional pumpout system or pumpout system and storage tank as shown in Fig. 15-18.

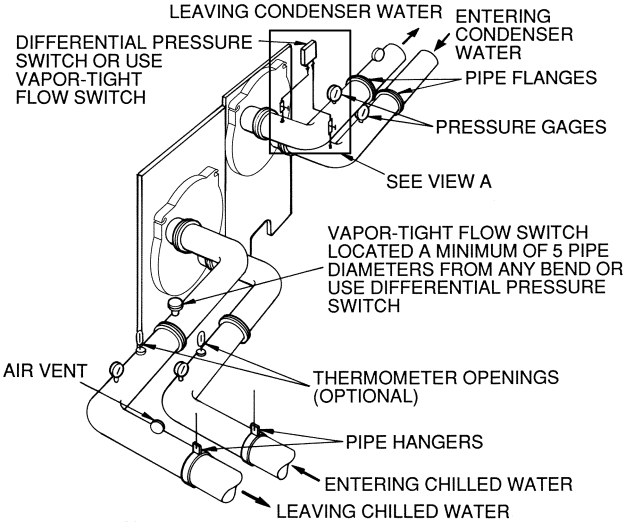

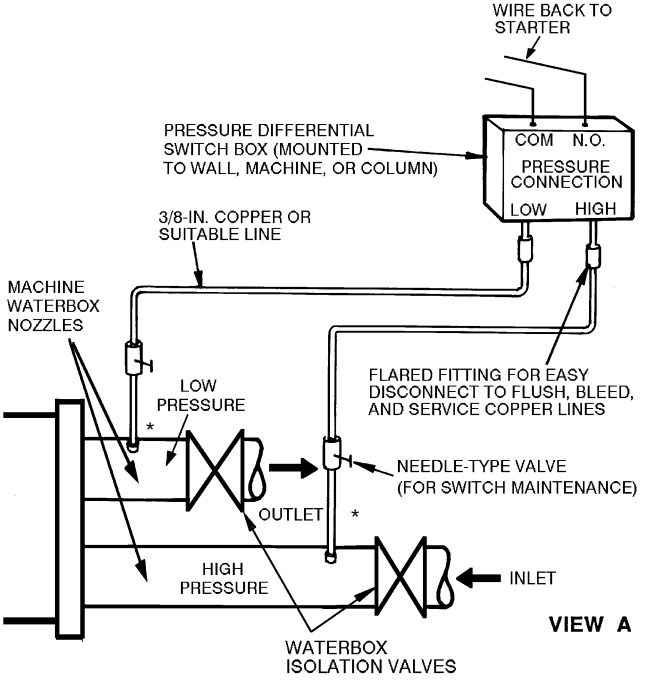

LEGEND

COM — Common
N.O. — Normally Open

*Do not tap connections after shutoff valve.

Fig. 13 — Typical Nozzle Piping

19XR NOZZLE ARRANGEMENTS

NOZZLE-IN HEAD WATERBOXES

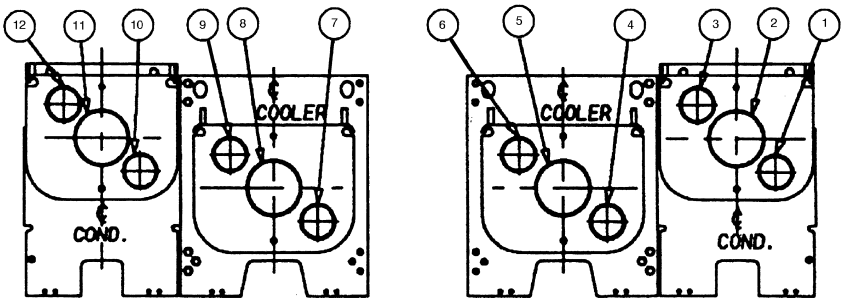

DRIVE END COMPRESSOR END

FRAME 3

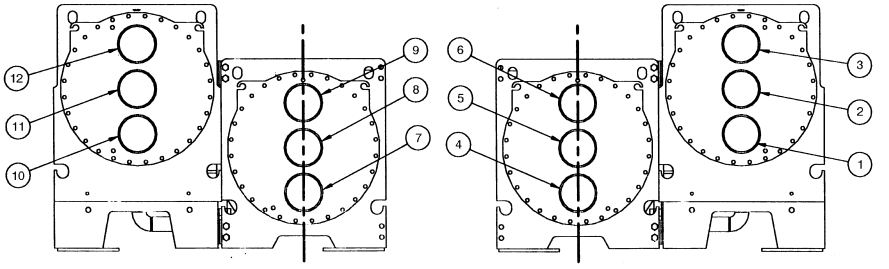

DRIVE END COMPRESSOR END

FRAME 4, 5 AND 6

NOZZLE ARRANGEMENT CODES

PASS	COOLER WATERBOXES		
	In	Out	Arrangement Code*
1	8	5	A
	5	8	B
2	7	9	C
	4	6	D
3	7	6	E
	4	9	F

PASS	CONDENSER WATERBOXES		
	In	Out	Arrangement Code*
1	11	2	P
	2	11	Q
2	10	12	R
	1	3	S
3	10	3	T
	1	12	U

*Refer to Carrier certified dimensional prints for arrangement codes specific to each machine.

MARINE WATERBOXES

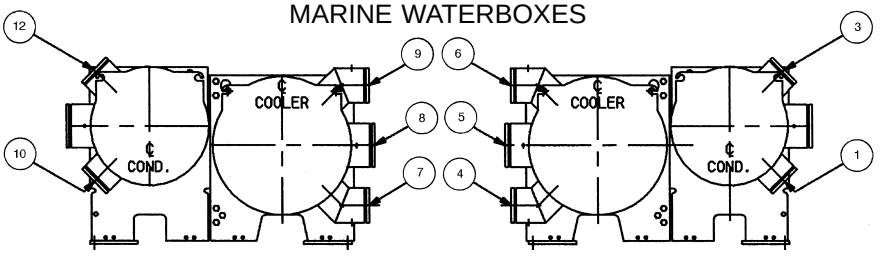

DRIVE END COMPRESSOR END

NOZZLE ARRANGEMENT CODES

PASS	COOLER WATERBOXES			CONDENSER WATERBOXES		
	In	Out	Arrangement Code	In	Out	Arrangement Code
1	8	5	A	—	—	—
	5	8	B	—	—	—
2	7	9	C	10	12	R
	4	6	D	1	3	S
3	7	6	E	—	—	—
	4	9	F	—	—	—

WATERBOX NOZZLE SIZES

FRAME	PASS	NOMINAL PIPE SIZE (in.)		ACTUAL PIPE ID (in.)	
		Cooler	Condenser	Cooler	Condenser
3	1	10	10	10.020	10.020
	2	8	8	7.981	7.981
	3	6	6	6.065	6.065
4	1	10	10	10.020	10.020
	2	8	8	7.981	7.981
	3	6	6	6.065	6.065
5	1	10	10	10.020	10.020
	2	8	10	7.981	10.020
	3	6	8	6.065	7.981
6	1	10	10	10.020	10.020
	2	10	10	10.020	10.020
	3	8	8	7.981	7.961

Fig. 14 — Piping Flow Data

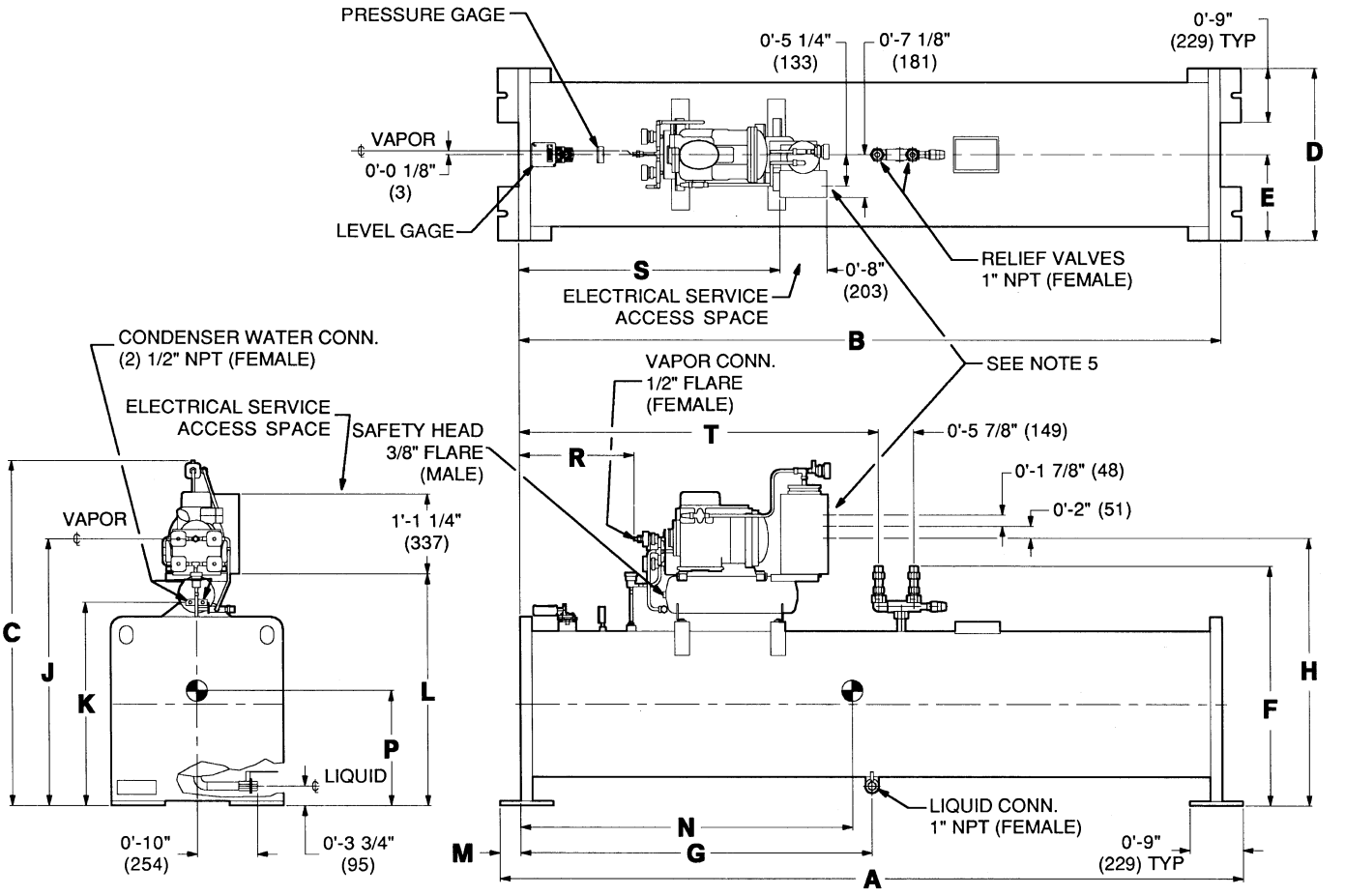

DIMENSIONS

ENGLISH (ft-in.)

TANK SIZE	A	B	C	D	E	F	G	H	J	K	L	M	N	P	R	S	T
0428	10- 5	9-10	4-9	2-4¾	1-2⅜	3-1 3/16	4-11	3-8⅛	3- 8	2-9 7/16	3-2	0-3½	4-8¾	1-7⅞	1-7 5/16	3-7¾	5-0¼
0452	14-11¼	14- 4½	5-0⅞	2-8½	1-4¼	3-4 7/16	7- 2¼	4-0	3-11⅞	3-1 5/16	3-5⅞	0-3⅜	7-1½	1-8¾	1-7 9/16	3-8	5-0½

SI (mm)

TANK SIZE	A	B	C	D	E	F	G	H	J	K	L	M	N	P	R	S	T
0428	3175	2997	1448	730	365	945	1499	1121	1118	849	965	89	1442	505	491	1111	1530
0452	4553	4382	1546	826	413	1027	2191	1219	1216	948	1064	86	2172	528	497	1118	1537

NOTES:

1. ◓ Denotes center of gravity.
2. Dimensions in ( ) are in millimeters.
3. The weights and center of gravity values given are for an empty storage tank.
4. For additional information on the pumpout unit, see certified drawings.
5. The available conduit knockout sizes are:

QTY	TRADE SIZE	LOCATION
1	½″	top
1	¾″	bottom
1	1″	middle
1	1¼″	middle

Fig. 15 — Optional Pumpout Unit and Storage Tank

RATED DRY WEIGHT AND REFRIGERANT CAPACITY

ENGLISH (lb)

TANK SIZE	TANK OD (in.)	DRY WEIGHT* (lb)	MAXIMUM REFRIGERANT CAPACITY (lb)	
			ASHRAE 15	ARI 495
0428	24.00	2155	2025	1810
0452	27.25	3181	3880	3465

SI (kg)

TANK SIZE	TANK OD (mm)	DRY WEIGHT* (kg)	MAXIMUM REFRIGERANT CAPACITY (kg)	
			ASHRAE 15	ARI 495
0428	610	978	928	822
0452	592	1443	1760	1572

LEGEND

ARI — Air Conditioning and Refrigeration Institute
ASHRAE — American Society of Heating, Refrigeration, and Air Conditioning Engineers
OD — Outside Diameter

*The above dry weight includes the pumpout condensing unit weight of 210 lbs (95 kg).

Fig. 15 — Optional Pumpout Unit and Storage Tank (cont)

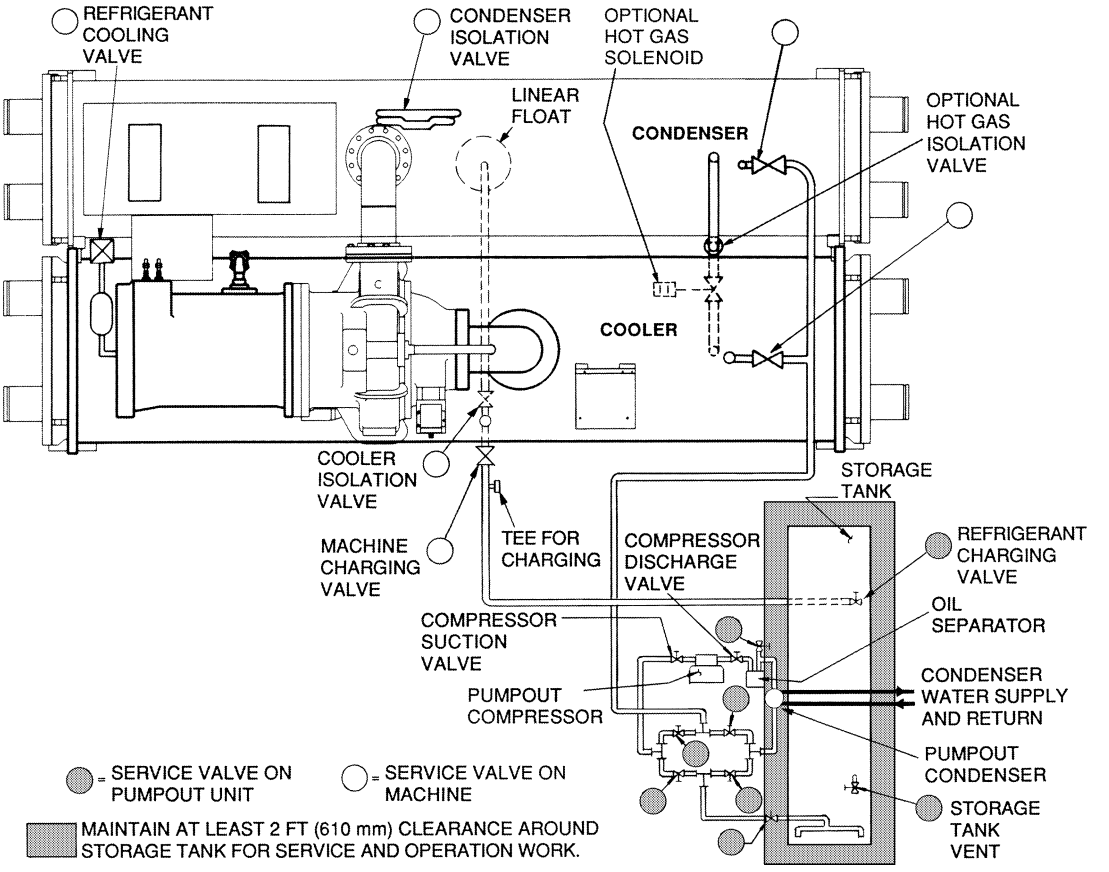

Fig. 16 — Optional Pumpout System Piping Schematic with Storage Tank

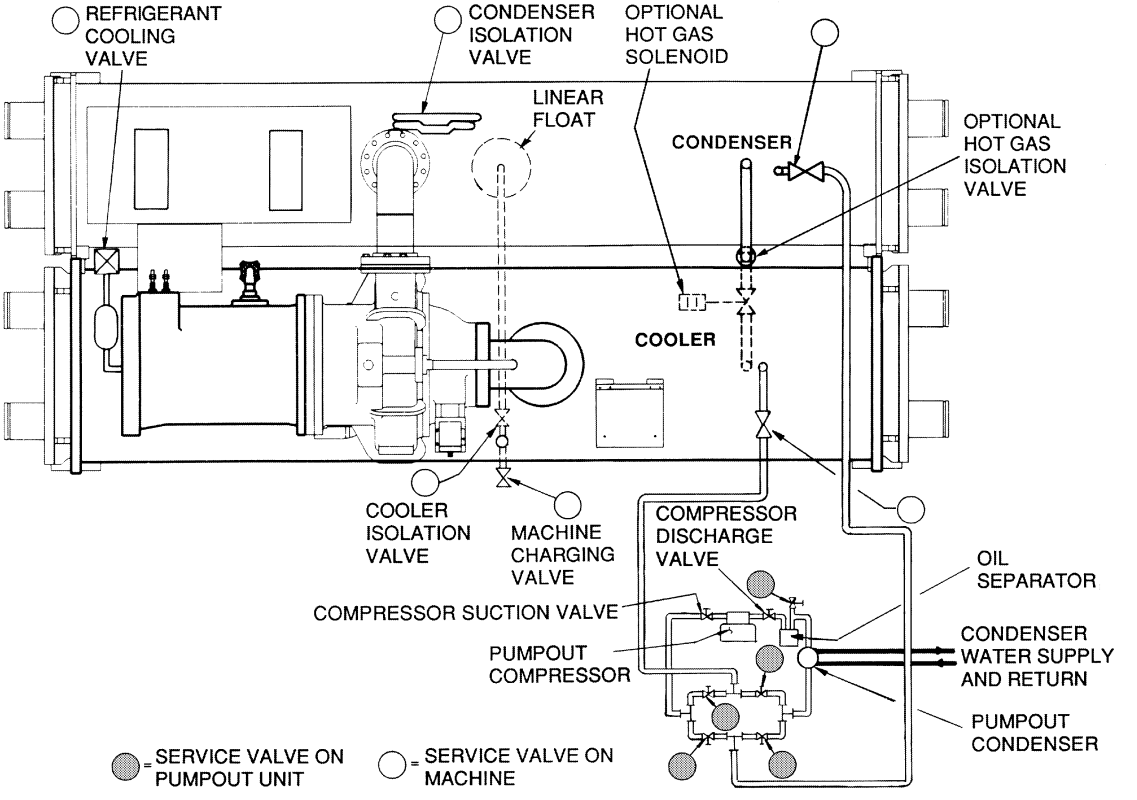

Fig. 17 — Optional Pumpout System Piping Schematic without Storage Tank

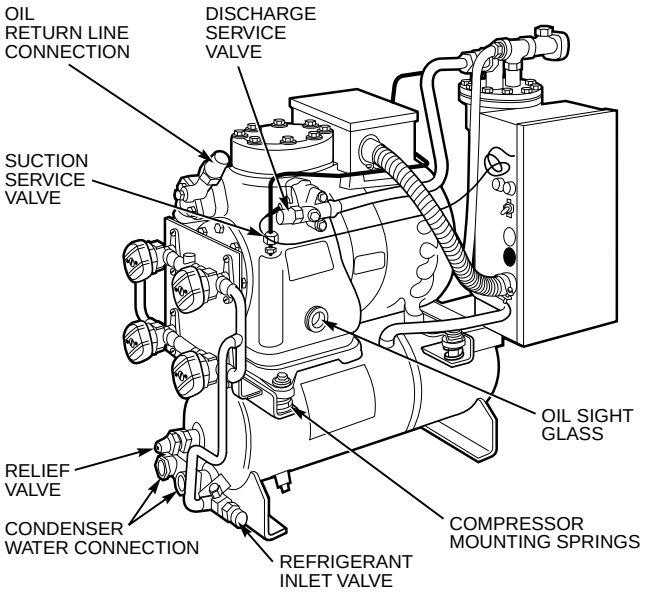

Fig. 18 — Pumpout Unit

INSTALL VENT PIPING TO RELIEF DEVICES — The 19XR chiller is factory equipped with relief devices on the cooler and condenser shells. Refer to Fig. 19 and Table 6 for size and location of relief devices. Vent relief devices to the outdoors in accordance with ANSI/ASHRAE 15 (latest edition) Safety Code for Mechanical Refrigeration and all other applicable codes.

⚠ DANGER

Refrigerant discharged into confined spaces can displace oxygen and cause asphyxiation.

1. If relief devices are manifolded, the cross-sectional area of the relief pipe must at least equal the sum of the areas required for individual relief pipes.
2. Provide a pipe plug near outlet side of each relief device for leak testing. Provide pipe fittings that allow vent piping to be disconnected periodically for inspection of valve mechanism.
3. Piping to relief devices must not apply stress to the device. Adequately support piping. A length of flexible tubing or piping near the device is essential on spring-isolated machines.
4. Cover the outdoor vent with a rain cap and place a condensation drain at the low point in the vent piping to prevent water build-up on the atmospheric side of the relief device.

Table 6 — Relief Device Locations

RELIEF VALVE OUTLET SIZE	LOCATION	QUANTITY
1-in. NPT FEMALE CONNECTOR	Cooler	1
1-in.NPT FEMALE CONNECTOR	Condenser	2
1-in. NPT FEMALE CONNECTOR	Optional Storage Tank	2

Make Electrical Connections — Field wiring must be installed in accordance with job wiring diagrams and all applicable electrical codes.

⚠ CAUTION

Do not run 120-v wiring into the control cabinet. The control cabinet should only be used for additional extra-low voltage wiring (50 v maximum).

Wiring diagrams in this publication (Fig. 20-27) are for reference only and are not intended for use during actual installation; follow job specific wiring diagrams.

⚠ WARNING

Do not attempt to start compressor or oil pump (even for a rotation check) or apply test voltage of any kind while machine is under dehydration vacuum. Motor insulation breakdown and serious damage may result.

CONNECT CONTROL INPUTS — Connect the control input wiring from the chilled and condenser water flow switches to the starter terminal strip. Wiring may also be specified for a spare safety switch, and a remote start/stop contact can be wired to the starter terminal strip. Additional spare sensors and Carrier Comfort Network modules may be specified as well. These are wired to the machine control panel as indicated in Fig. 20 and 21.

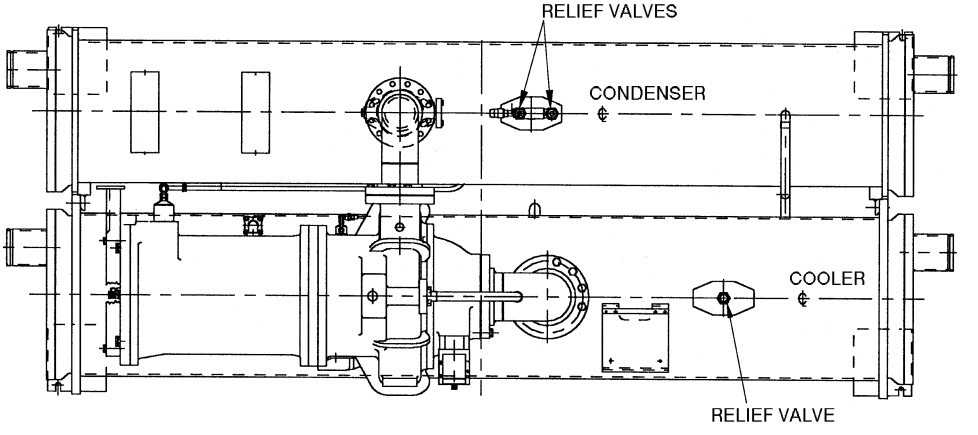

Fig. 19 — Relief Valve Locations

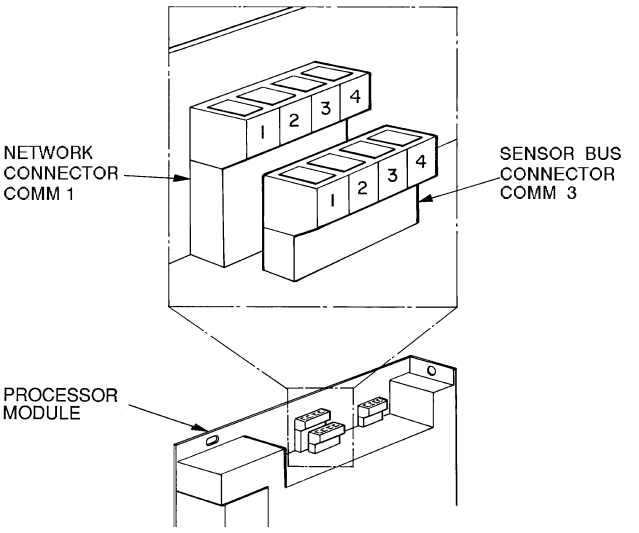

Fig. 20 — Carrier Comfort Network Communication Bus Wiring

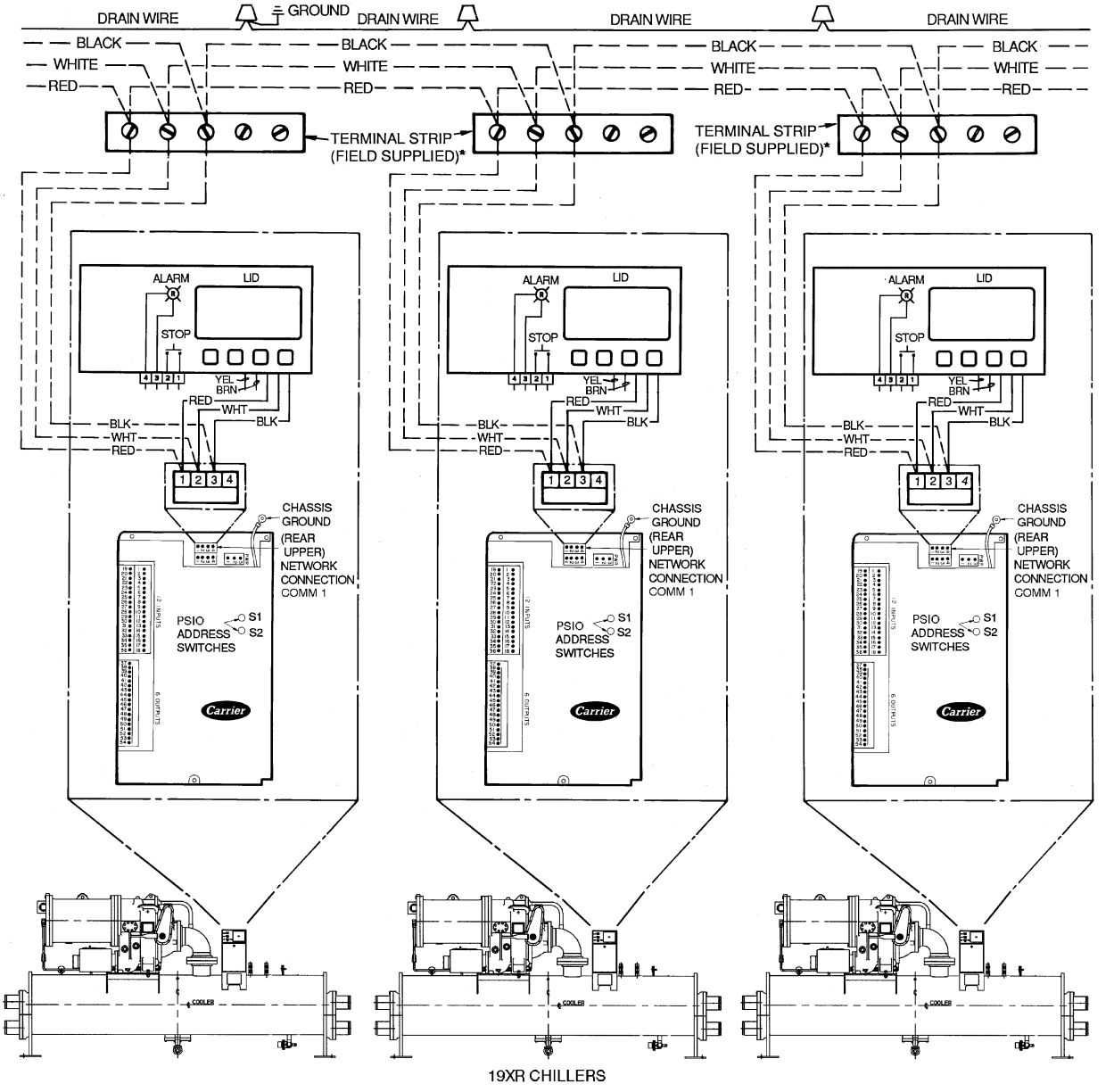

LEGEND
——— Factory Wiring
- - - - Field Wiring

*Field supplied terminal strip must be located in control panel.

Fig. 21 — COMM1 CCN Communication Wiring For Multiple Chillers (Typical)

CONNECT CONTROL OUTPUTS — Connect auxiliary equipment, chilled and condenser water pumps, and spare alarms as required and indicated on job wiring drawings.

CONNECT STARTER — The 19XR is available with either a unit-mounted, factory-installed starter or a free-standing, field-installed starter (Fig. 22 and 23).

Unit Mounted, Factory-Installed Starter— Attach power leads by connecting them from inside the starter cabinet to the line side circuit breaker terminals. See Fig. 22 and 24. Machines with electro-mechanical starters (wye-delta) will have a top hat shipped with the machine if the RLA is greater than 432 amps. The top hat is shipped in the knocked-down position and must be assembled and installed on top of the starter cabinet, over the line side circuit breaker. During assembly, remove the access plate and use it as the cover piece of the top hat. The top hat provides additional wire bending space to attach line side power leads to the circuit breaker within the starter. The solid-state starter does not require a top hat.

> IMPORTANT: Be sure to ground the power circuit in accordance with the National Electrical Code (NEC), applicable local codes, and job wiring diagrams. Also, make sure correct phasing is observed for proper rotation.

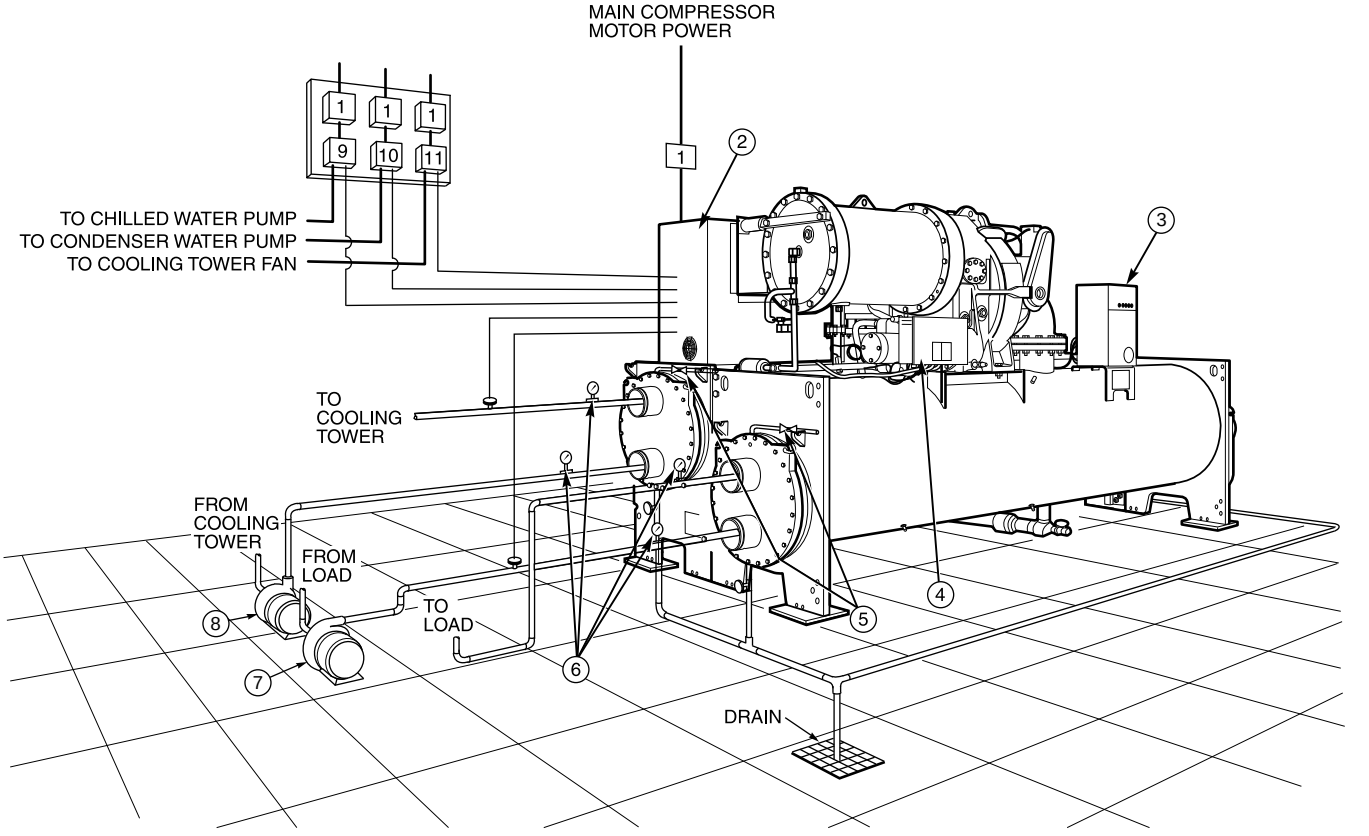

Piping
Control Wiring
Power Wiring

LEGEND

1 — Disconnect
2 — Unit Mounted Starter
3 — Control Cabinet
4 — Power Panel
5 — Vents
6 — Pressure Gages
7 — Chilled Water Pump
8 — Condenser Water Pump
9 — Chilled Water Pump Starter
10 — Condensing Water Pump Starter
11 — Cooling Tower Fan Starter

NOTES:
1. Wiring and piping shown are for general point-of-connection only and are not intended to show details for a specific installation. Certified field wiring and dimensional diagrams are available on request.
2. All wiring must comply with applicable codes.
3. Refer to Carrier System Design Manual for details regarding piping techniques.
4. Wiring not shown for optional devices such as:
   - remote start-stop
   - remote alarm
   - optional safety device
   - 4 to 20 mA resets
   - optional remote sensors

Fig. 22 — 19XR with Optional Unit-Mounted Starter

Freestanding, Field-Installed Starter — Assemble and install compressor terminal box in desired orientation, and cut necessary conduit openings in conduit support plates. See Fig. 23 and 25. Attach power leads to compressor terminals in accordance with job wiring drawings, observing caution label in terminal box. Use only copper conductors. The motor must be grounded in accordance with NEC (National Electrical Code), applicable local codes, and job wiring diagrams. Installer is responsible for any damage caused by improper wiring between starter and compressor motor.

> IMPORTANT: Do not insulate terminals until wiring arrangement has been checked and approved by Carrier start-up personnel. Also, make sure correct phasing is followed for proper motor rotation.

Insulate Motor Terminals and Lead Wire Ends — Insulate compressor motor terminals, lead wire ends, and electrical wires to prevent moisture condensation and electrical arcing. For low-voltage units (up to 600 v), obtain insulation material from machine shipping package consisting of 3 rolls of insulation putty and one roll of vinyl tape.

1. Insulate each terminal by wrapping with one layer of insulation putty.
2. Overwrap putty with 4 layers of vinyl tape.

High Voltage Units — High-voltage units require special terminal preparation. Follow local electrical codes for high-voltage installation. Vinyl tape is not acceptable; a high voltage terminal method must be used.

Connect Power Wires to Oil Pump Starter — See Fig. 26. Connect power wires to oil pump starter mounted in machine power panel. Use separate fused disconnect or circuit breaker as shown on job wiring diagrams and Fig. 25. Check that power supply voltage agrees with oil pump voltage. Follow correct phasing for proper motor rotation.

> **⚠ CAUTION**
>
> Do not punch holes or drill into the top surface of the power panel. Knockouts are provided in the bottom of the power panel for wiring connections.

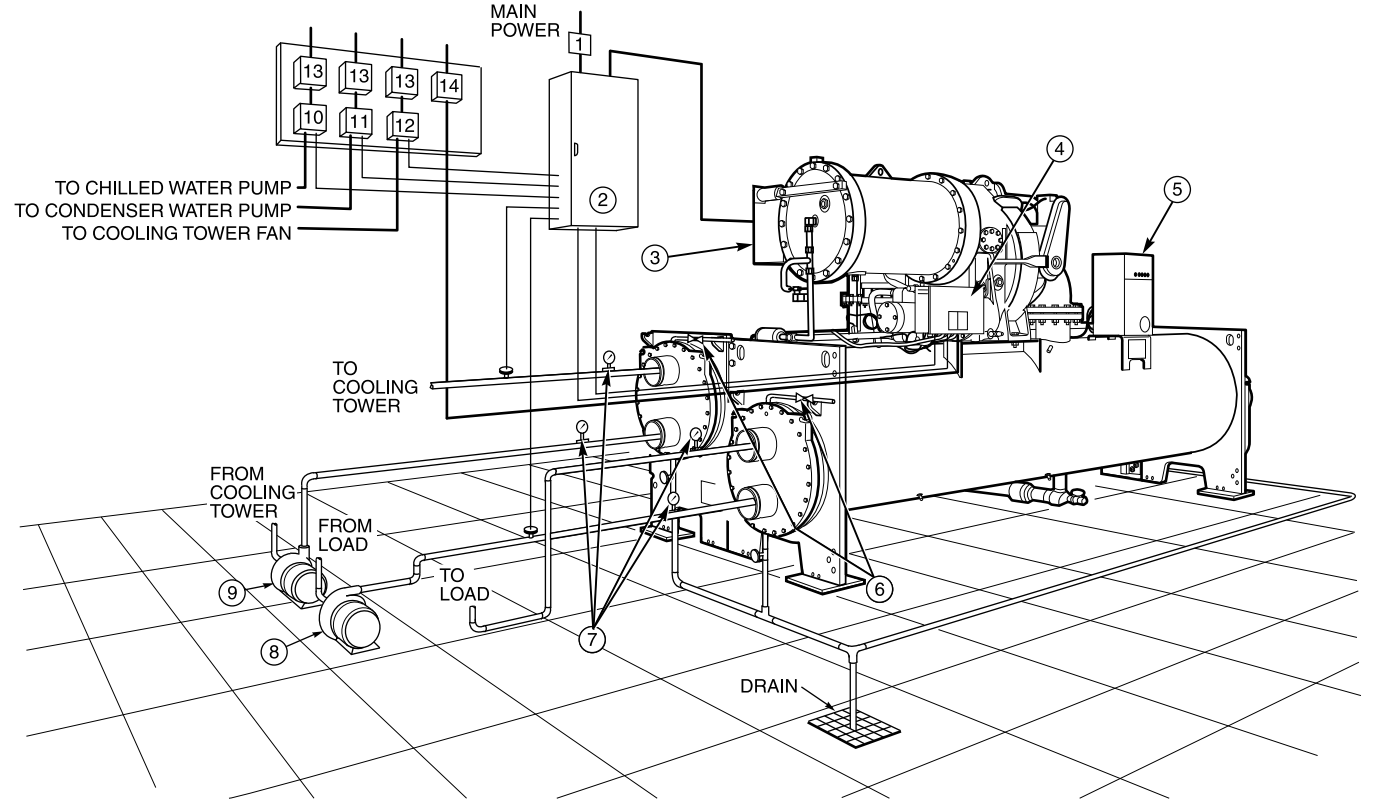

Piping
Control Wiring
Power Wiring

LEGEND

1 — Disconnect
2 — Freestanding Compressor Motor Starter
3 — Compressor Motor Terminal Box
4 — Chiller Power Panel
5 — Control Cabinet
6 — Vents
7 — Pressure Gages
8 — Chilled Water Pump
9 — Condenser Water Pump
10 — Chilled Water Pump Starter
11 — Condensing Water Pump Starter
12 — Cooling Tower Fan Starter
13 — Disconnect
14 — Oil Pump Disconnect (see Note 5)

NOTES:
1. Wiring and piping shown are for general point-of-connection only and are not intended to show details for a specific installation. Certified field wiring and dimensional diagrams are available on request.
2. All wiring must comply with applicable codes.
3. Refer to Carrier System Design Manual for details regarding piping techniques.
4. Wiring not shown for optional devices such as:
   - remote start-stop
   - remote alarm
   - optional safety device
   - 4 to 20 mA resets
   - optional remote sensors
5. Oil pump disconnect may be located within the enclosure of Item 2 — Freestanding Compressor Motor Starter.

Fig. 23 — 19XR with Freestanding Starter

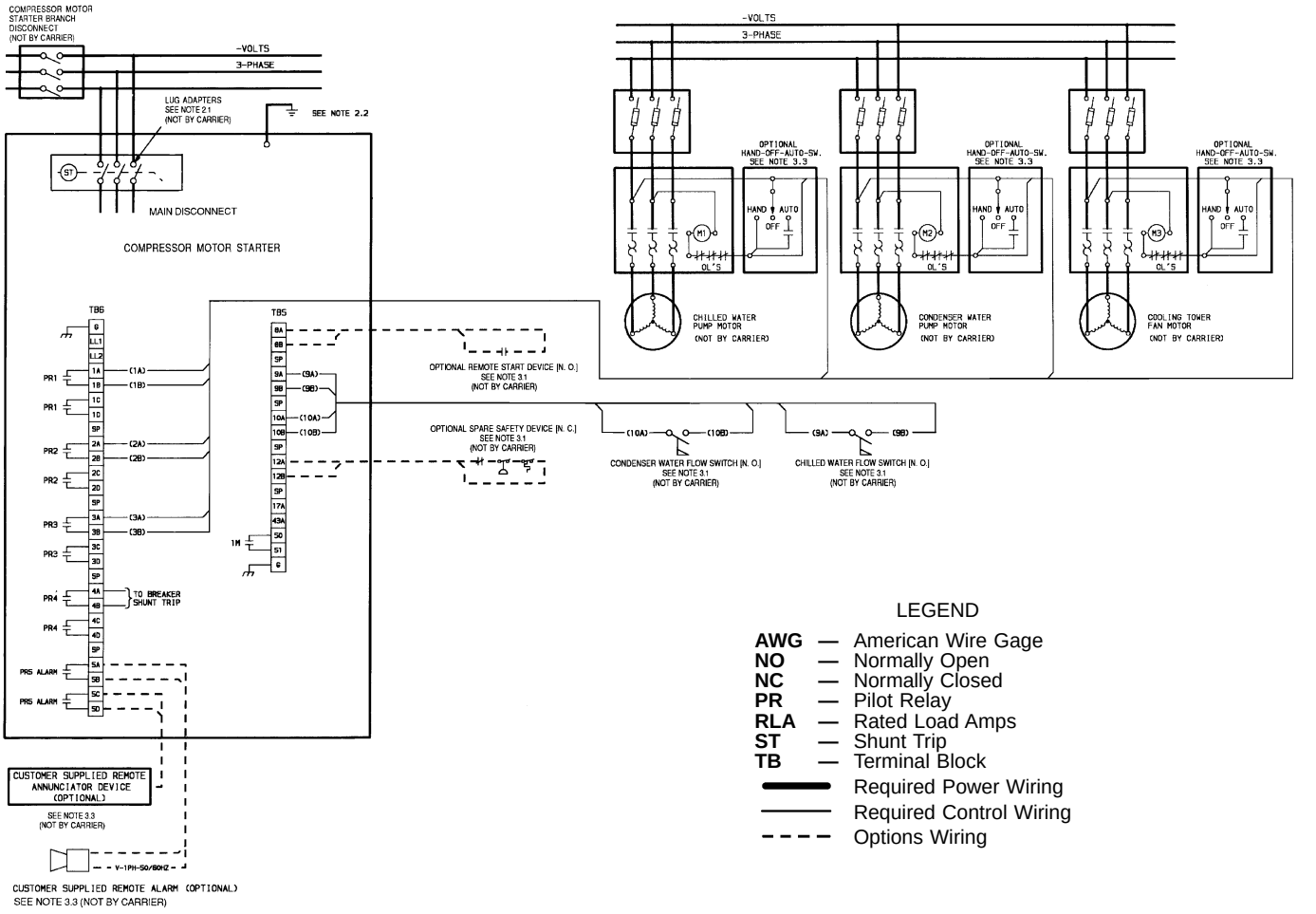

NOTES:

I. GENERAL

1.0 Starters shall be designed and manufactured in accordance with Carrier Engineering Requirement Z-375.

1.1 All field-supplied conductors, devices, field-installation wiring, and termination of conductors and devices must be in compliance with all applicable codes and job specifications.

1.2 The routing of field-installed conduit and conductors and the location of field-installed devices must not interfere with equipment access or the reading, adjusting, or servicing of any component.

1.3 Equipment, installation, and all starting and control devices must comply with details in equipment submittal drawings and literature.

1.4 Contacts and switches are shown in the position they would assume with the circuit deenergized and the chiller shut down.

1.5 WARNING — Do not use aluminum conductors.

1.6 Installer is responsible for any damage caused by improper wiring between starter and machine.

II. POWER WIRING TO STARTER

2.0 Power conductor rating must meet minimum unit nameplate voltage and compressor motor RLA.
When (3) conductors are used:
Minimum ampacity per conductor = 1.25 x compressor RLA
When (6) conductors are used:
Minimum ampacity per conductor = 0.721 x compressor RLA

2.1 Lug adapters may be required if installation conditions dictate that conductors be sized beyond the minimum ampacity required. Contact starter supplier for lug information.

2.2 Compressor motor and controls must be grounded by using equipment grounding lugs provided inside starter enclosure.

III. CONTROL WIRING

3.0 Field supplied control conductors to be at least 18 AWG or larger.

3.1 Chilled water and condenser water flow switch contacts, optional remote start device contacts, and optional spare safety device contacts must have 24 vdc rating. Max current is 60 ma; nominal current is 10 ma. Switches with gold plated bifurcated contacts are recommended.

3.2 Remove jumper wire between 12A and 12B before connecting auxiliary safeties between these terminals.

3.3 Pilot relays can control cooler and condenser pump and tower fan motor contactor coil loads rated 10 amps at 115 vac up to 3 amps at 600 vac. Control wiring required for Carrier to start pumps and tower fan motors must be provided to assure machine protection. If primary pump and tower fan motor are controlled by other means, also provide a parallel means for control by Carrier. Do not use starter control transformer as the power source for pilot relay loads.

3.4 Do not route control wiring carrying 30 v or less within a conduit which has wires carrying 50 v or higher or alongside wires carrying 50 v or higher.

3.5 Voltage selector switch in machine power panel is factory set for 115 v control power source. When 230 v control power source is used, set switch to 230 v position.

3.6 Control wiring cables between starter and power panel must be shielded with minimum rating of 600 v, 80 C. Ground shield at starter.

3.7 If optional oil pump circuit breaker is not supplied within the starter enclosure as shown, it must be located within sight of the machine with wiring routed to suit.

IV. POWER WIRING BETWEEN STARTER AND COMPRESSOR MOTOR

4.0 Low voltage (600 v or less) compressor motors have (6) ¾ in. terminal studs (lead connectors not supplied by Carrier). Either 3 or 6 leads must be run between compressor motor and starter, depending on type of motor starter employed. If only 3 leads are required, jumper motor terminals as follows: 1 to 6, 2 to 4, 3 to 5. Center to center distance between terminals is 2 15/16 inches. Compressor motor starter must have nameplate stamped as conforming with Carrier requirement Z-375.

4.1 When more than one conduit is used to run conductors from starter to compressor motor terminal box, one conductor from each phase must be in each conduit to prevent excessive heating. (e.g., conductors to motor terminals 1, 2 & 3 in one conduit, and those to 4, 5 & 6 in another.)

4.2 Compressor motor power connections can be made through top, top rear, or sides of compressor motor terminal box using holes cut by contractor to suit conduit. Flexible conduit should be used for the last few feet to the terminal box for unit vibration isolation. Use of stress cones or 12 conductors larger than 500 MCM may require an oversize (special) motor terminal box (not supplied by Carrier). Lead connections between 3-phase motors and their starters must not be insulated until Carrier personnel have checked compressor and oil pump rotations.

4.3 Compressor motor frame to be grounded in accordance with the National Electrical Code (NFPA-70) and applicable codes. Means for grounding compressor motor is a pressure connector for #4 to 500 MCM wire, supplied and located in the back lower left side corner of the compressor motor terminal box.

4.4 Do not allow motor terminals to support weight of wire cables. Use cable supports and strain reliefs as required.

4.5 Use backup wrench when tightening lead connectors to motor terminal studs. Torque to 45 lb-ft max.

Fig. 24 — 19XR Typical Field Wiring with Optional Unit-Mounted Starter

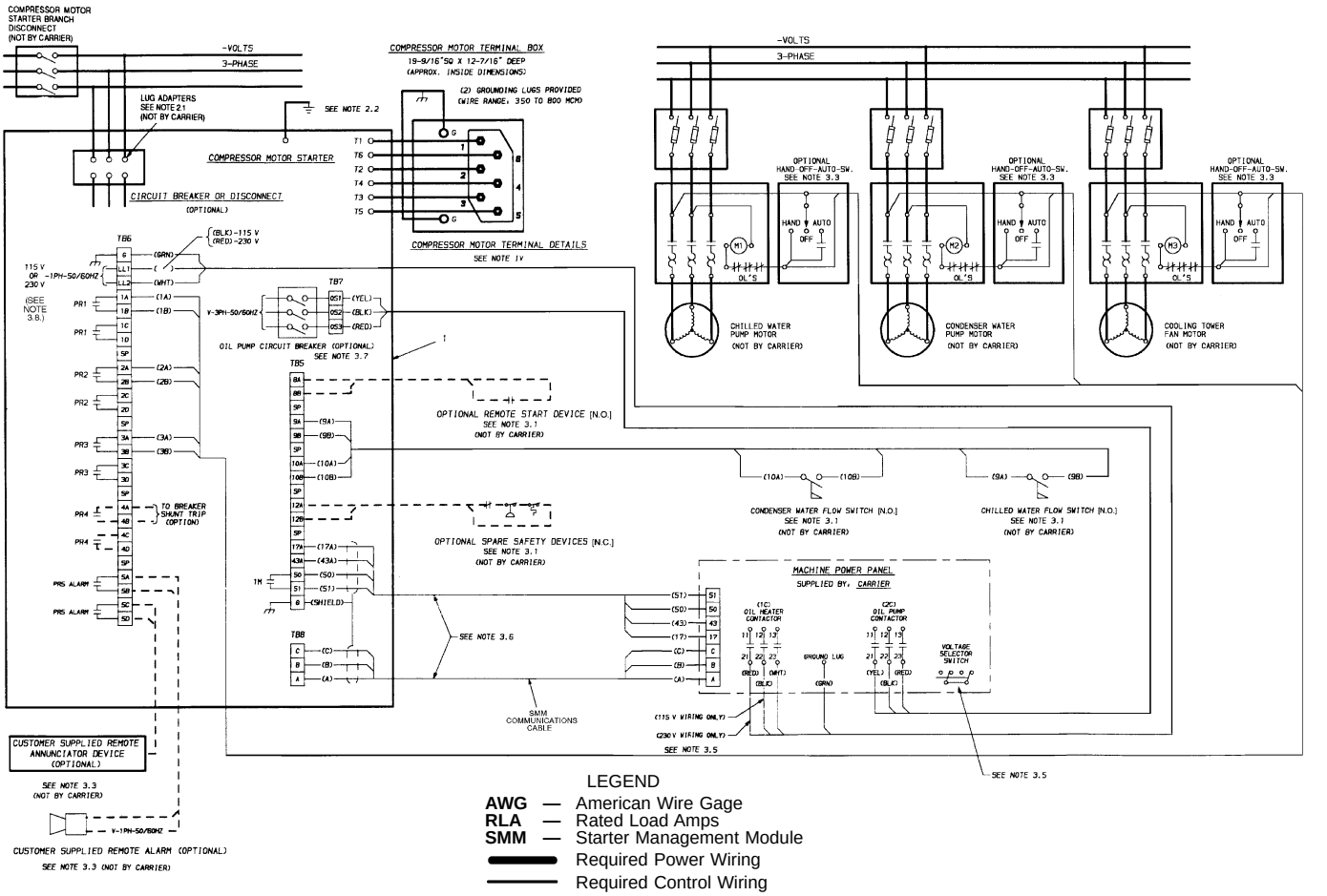

LEGEND

AWG — American Wire Gage
RLA — Rated Load Amps
SMM — Starter Management Module
Required Power Wiring
Required Control Wiring
Options Wiring

NOTES:

I. GENERAL

1.0 Starters shall be designed and manufactured in accordance with Carrier Engineering Requirement Z-375.
1.1 All field-supplied conductors, devices, field-installation wiring, and termination of conductors and devices must be in compliance with all applicable codes and job specifications.
1.2 The routing of field-installed conduit and conductors and the location of field-installed devices must not interfere with equipment access or the reading, adjusting, or servicing of any component.
1.3 Equipment, installation, and all starting and control devices must comply with details in equipment submittal drawings and literature.
1.4 Contacts and switches are shown in the position they would assume with the circuit deenergized and the chiller shut down.
1.5 WARNING — Do not use aluminum conductors.
1.6 Installer is responsible for any damage caused by improper wiring between starter and machine.

II. POWER WIRING TO STARTER

2.0 Power conductor rating must meet minimum unit nameplate voltage and compressor motor RLA.
When (3) conductors are used:
Minimum ampacity per conductor = 1.25 x compressor RLA
When (6) conductors are used:
Minimum ampacity per conductor = 0.721 x compressor RLA
2.1 Lug adapters may be required if installation conditions dictate that conductors be sized beyond the minimum ampacity required. Contact starter supplier for lug information.
2.2 Compressor motor and controls must be grounded by using equipment grounding lugs provided inside starter enclosure.

III. CONTROL WIRING

3.0 Field supplied control conductors to be at least 18 AWG or larger.
3.1 Chilled water and condenser water flow switch contacts, optional remote start device contacts, and optional spare safety device contacts must have 24 vdc rating. Max current is 60 ma; nominal current is 10 ma. Switches with gold plated bifurcated contacts are recommended.
3.2 Remove jumper wire between 12A and 12B before connecting auxiliary safeties between these terminals.
3.3 Pilot relays can control cooler and condenser pump and tower fan motor contactor coil loads rated 10 amps at 115 vac up to 3 amps at 600 vac. Control wiring required for Carrier to start pumps and tower-fan motors must be provided to assure machine protection. If primary pump and tower fan motor are controlled by other means, also provide a parallel means for control by Carrier. Do not use starter control transformer as the power source for pilot relay loads.
3.4 Do not route control wiring carrying 30 v or less within a conduit which has wires carrying 50 v or higher or alongside wires carrying 50 v or higher.
3.5 Voltage selector switch in machine power panel is factory set for 115 v control power source. When 230 v control power source is used, set switch to 230 v position.
3.6 Control wiring cables between starter and power panel must be shielded with minimum rating of 600 v, 80 C. Ground shield at starter.
3.7 If optional oil pump circuit breaker is not supplied within the starter enclosure as shown, it must be located within sight of the machine with wiring routed to suit.
3.8 Voltage to terminals LL1 and LL2 comes from a control transformer in a starter built to Carrier specifications. Do not connect an outside source of control power to the compressor motor starter (terminals LL1 and LL2). An outside power source will produce dangerous voltage at the line side of the starter.

IV. POWER WIRING BETWEEN STARTER AND COMPRESSOR MOTOR

4.0 Low voltage (600 v or less) compressor motors have (6) ¾ in. terminal studs (lead connectors not supplied by Carrier). Either 3 or 6 leads must be run between compressor motor and starter, depending on type of motor starter employed. If only 3 leads are required, jumper motor terminals as follows: 1 to 6, 2 to 4, 3 to 5. Center to center distance between terminals is 2 15/16 inches. Compressor motor starter must have nameplate stamped as conforming with Carrier requirement Z-375.
4.1 When more than one conduit is used to run conductors from starter to compressor motor terminal box, one conductor from each phase must be in each conduit to prevent excessive heating. (e.g., conductors to motor terminals 1, 2 & 3 in one conduit, and those to 4, 5 & 6 in another.)
4.2 Compressor motor power connections can be made through top, top rear, or sides of compressor motor terminal box using holes cut by contractor to suit conduit. Flexible conduit should be used for the last few feet to the terminal box for unit vibration isolation. Use of stress cones or 12 conductors larger than 500 MCM may require an oversize (special) motor terminal box (not supplied by Carrier). Lead connections between 3-phase motors and their starters must not be insulated until Carrier personnel have checked compressor and oil pump rotations.
4.3 Compressor motor frame to be grounded in accordance with the National Electrical Code (NFPA-70) and applicable codes. Means for grounding compressor motor is a pressure connector for #4 to 500 MCM wire, supplied and located in the back lower left side corner of the compressor motor terminal box.
4.4 Do not allow motor terminals to support weight of wire cables. Use cable supports and strain reliefs as required.
4.5 Use backup wrench when tightening lead connectors to motor terminal studs. Torque to 45 lb-ft max.

Fig. 25 — 19XR Typical Field Wiring with Free-Standing Starter

Connect Power Wires to Oil Heater Contactor — Connect control power wiring between the oil heater contactor terminals (Fig. 27) and terminals LL1 and LL2 on the field wiring strip in the compressor motor starter. Refer to Fig. 27 and wiring label on the machine power panel.

⚠ WARNING

Voltage to terminals LL1 and LL2 comes from a control transformer in a starter built to Carrier specifications. Do not connect an outside source of control power to the compressor motor starter (terminals LL1 and LL2). An outside power source will produce dangerous voltage at the line side of the starter, because supplying voltage at the transfomer secondary terminals produces input level voltage at the transformer primary terminals.

Connect Wiring from Starter to Power Panel — Connect control wiring from main motor starter to the machine power panel. All control wiring must use shielded cable. Also, connect the communications cable. Refer to the job wiring diagrams for cable type and cable number. Make sure the control circuit is grounded in accordance with applicable electrical codes and instructions on machine control wiring label.

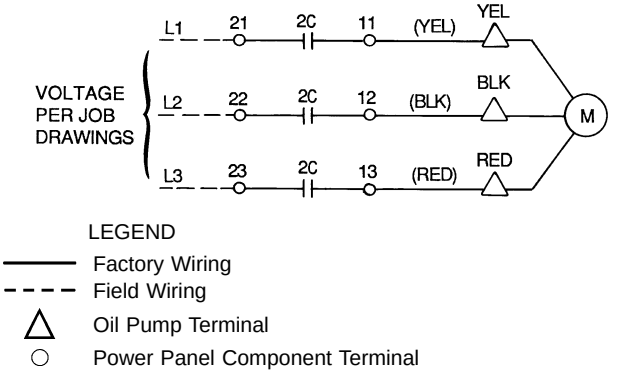

Fig. 26 — Oil Pump Wiring

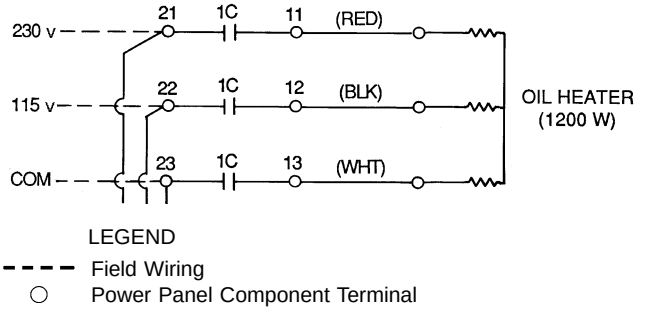

NOTE: The voltage selector switch in the machine power panel is factory set for 115 v control power source. When a 230 v control power source is used, set the voltage selector switch at 230 v.

Fig. 27 — Oil Heater and Control Power Wiring

CARRIER COMFORT NETWORK INTERFACE — The Carrier Comfort Network (CCN) communication bus wiring is supplied and installed by the electrical contractor. It consists of shielded, 3-conductor cable with drain wire.

The system elements are connected to the communication bus in a daisy chain arrangement. The positive pin of each system element communication connector must be wired to the positive pins of the system element on either side of it. The negative pins must be wired to the negative pins. The signal ground pins must be wired to the signal ground pins. See Fig. 20 for location of the CCN network connector (COMM1) on the processor module.

NOTE: Conductors and drain wire must be 20 AWG (American Wire Gage) minimum stranded, tinned copper. Individual conductors must be insulated with PVC, PVC/nylon, vinyl, Teflon, or polyethylene. An aluminum/polyester 100% foil shield and an outer jacket of PVC, PVC/nylon, chrome vinyl, or Teflon with a minimum operating temperature range of −4 F to 140 F (−20 C to 60 C) is required. See table below for cables that meet the requirements.

MANUFACTURER	CABLE NO.
Alpha	2413 or 5463
American	A22503
Belden	8772
Columbia	02525

When connecting the CCN communication bus to a system element, a color code system for the entire network is recommended to simplify installation and checkout. The following color code is recommended:

SIGNAL TYPE	CCN BUS CONDUCTOR INSULATION COLOR	COMM1 PLUG PIN NO.
+	Red	1
Ground	White	2
–	Black	3

If a cable with a different color scheme is selected, a similar color code should be adopted for the entire network.

At each system element, the shields of its communication bus cables must be tied together. If the communication bus is entirely within one building, the resulting continuous shield must be connected to ground at only one single point. See Fig. 21. If the communication bus cable exits from one building and enters another, the shields must be connected to ground at the lightening suppressor in each building where the cable enters or exits the building (one point only).

To connect the 19XR chiller to the network, proceed as follows (Fig. 21):

1. Cut power to the PIC control panel.
2. Remove the COMM1 plug from the processor module.
3. Cut a CCN wire and strip the ends of the RED, WHITE, and BLACK conductors.
4. Using a wirenut, connect the drain wires together.
5. Insert and secure the RED wire to Terminal 1 of the COMM1 plug.
6. Insert and secure the WHITE wire to Terminal 2 of the COMM1 plug.
7. Insert and secure the BLACK wire to Terminal 3 of the COMM1 plug.
8. Mount a terminal strip in a convenient location.
9. Connect the opposite ends of each conductor to separate terminals on the terminal strip.
10. Cut another CCN wire and strip the ends of the conductors.
11. Connect the RED wire to the matching location on the terminal strip.
12. Connect the WHITE wire to the matching location on the terminal strip.
13. Connect the BLACK wire to the matching location on the terminal strip.

Install Field Insulation

⚠ CAUTION

Protect insulation from weld heat damage and weld splatter. Cover with wet canvas cover during water piping installation.

When installing insulation at the job site, insulate the following components:

- compressor motor
- cooler shell
- cooler tube sheets
- suction piping
- motor cooling drain
- oil reclaim piping
- oil cooler refrigerant side tubing
- refrigerant liquid line to cooler

NOTE: Insulation of the waterbox covers is applied only at the jobsite by the contractor. When insulating the covers, make sure there is access for removal of waterbox covers for servicing (Fig. 28).

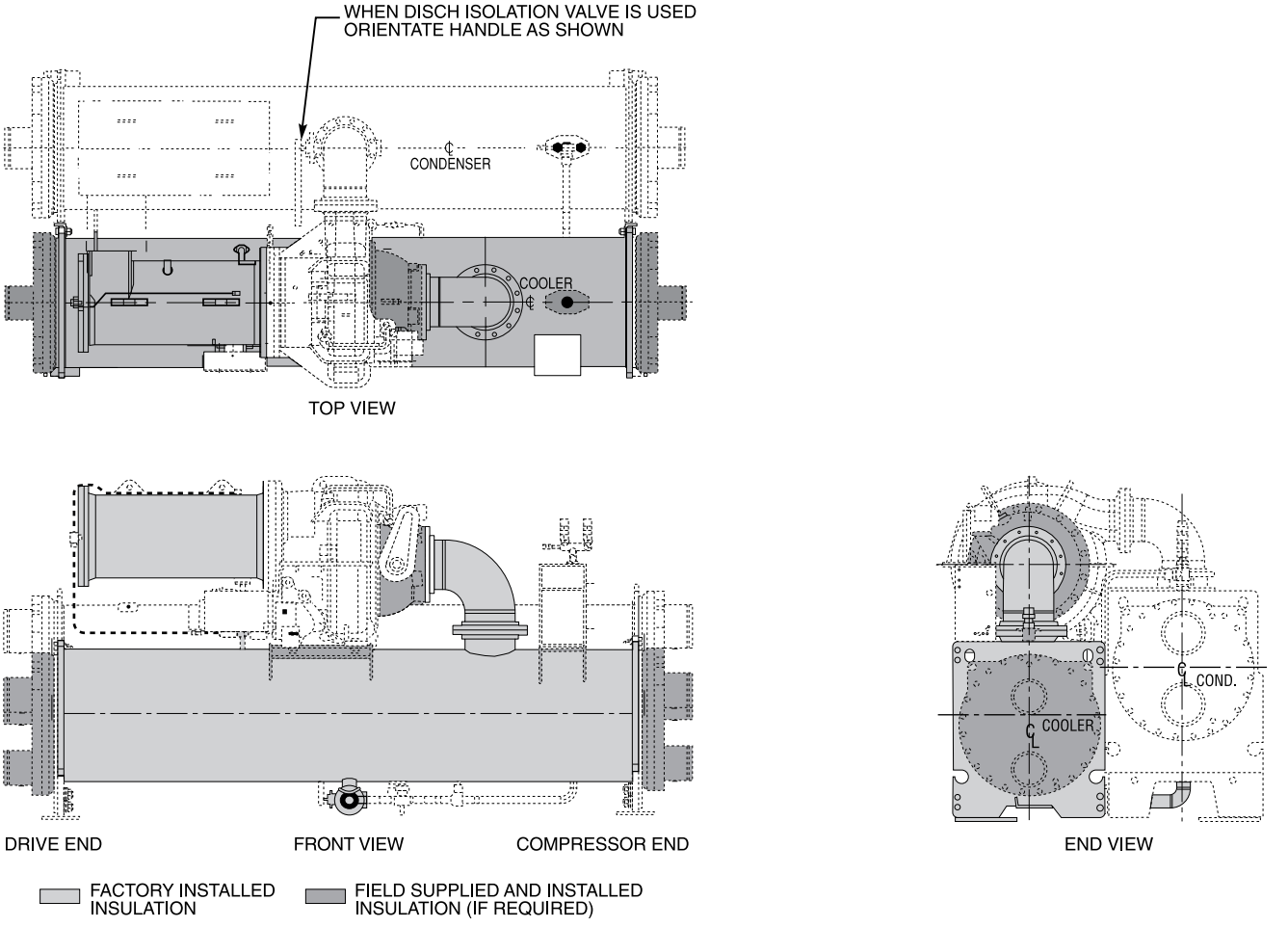

Fig. 28 — 19XR Insulation Area

Copyright 1996 Carrier Corporation

INSTALLATION START-UP REQUEST CHECKLIST

Machine Model Number: 19XR Serial Number: _____

To: _____ Date _____

_____

_____ _____
Project Name

Attn: _____ _____
Carrier Job Number

The following information provides the status of the chiller installation.

	YES/NO (N/A)	DATE TO BE COMPLETED
1. The machine is level.	_____	_____
2. The machine components are installed and connected in accordance with the installation instructions.	_____	_____
3. The isolation package and grouting (if necessary) are installed.	_____	_____
4. The relief valves are piped to the atmosphere.	_____	_____
5. All piping is installed and supported. Direction of flow is indicated in accordance with the installation instructions and job prints.		
a. Chilled water piping	_____	_____
b. Condenser water piping	_____	_____
c. Waterbox drain piping	_____	_____
d. Pumpout unit condenser piping (if installed)	_____	_____
e. Other _____	_____	_____
6. Gages are installed as called for on the job prints required to establish design flow for the cooler and condenser.		
a. Water pressure gages IN and OUT	_____	_____
b. Water temperature gages IN and OUT	_____	_____
7. The machine's starter wiring is complete. The wiring is installed per installation instructions and certified prints.		
a. Power wiring to compressor motor. (Motor leads will not be taped until the Carrier technician megger tests the motor.)	_____	_____
b. Oil pump wiring	_____	_____
c. Oil heater/control wiring	_____	_____
d. Other _____	_____	_____
8. The motor starter has not been supplied by Carrier. It has been installed according to the manufacturer's instructions.	_____	_____
9. The motor starter has not been supplied by Carrier and it has been checked for proper operation.	_____	_____

COMMENTS:

_____

_____

_____

_____

TESTING	YES/NO	DATE TO BE COMPLETED
1. The cooling tower fan has been checked for blade pitch and proper operation.	_____	_____
2. The chilled water and condenser water lines have been:		
a. Filled	_____	_____
b. Tested	_____	_____
c. Flushed	_____	_____
d. Vented	_____	_____
e. Strainers cleaned	_____	_____
3. The chilled water and condenser water pumps have been checked for proper rotation and flow.	_____	_____
4. The following cooling load will be available for start-up:		
a. 25%	_____	_____
b. 50%	_____	_____
c. 75%	_____	_____
d. 100%	_____	_____
5. The refrigerant charge is at the machine.	_____	_____
6. Services such as electrical power and control air will be available at start-up.	_____	_____
7. The electrical and mechanical representatives will be available to assist in commissioning the machine.	_____	_____
8. The customer's operators will be available to receive instructions for proper operation of the chiller after start-up.	_____	_____

Concerns about the installation/request for additional assistance:

_____

_____

_____

_____

_____

I am aware that the start-up time for a Carrier chiller can take between 2 and 6 days depending on the model of the machine and the options and accessories used with it.

Your contact at the job site will be _____

Phone number _____

Beeper number _____

Fax number _____

In accordance with our contract, we hereby request the services of your technician to render start-up services per contract terms for this job on _____ (Date). I understand that the technician's time will be charged as extra services due to correcting items in this checklist that are incomplete.

Signature of Purchaser _____

Signature of Job Site Supervisor _____

CUT ALONG DOTTED LINE

Copyright 1996 Carrier Corporation