WeatherMaster® 48GCG*04-06 Single Package Rooftop Ultra Low NOx (14 ng/J) Gas Heating/Electric Cooling Unit with Puron® (R-410A) Refrigerant

Installation Instructions

CONTENTS

Page

SAFETY CONSIDERATIONS 2
MODEL NUMBER NOMENCLATURE AND DIMENSIONS 3
Rated Indoor Airflow 3
INSTALLATION 8
Jobsite Survey 8
Step 1 — Plan for Unit Location 8
- ROOF MOUNT

Step 2 — Plan for Sequence of Unit Installation . . . 8
- CURB-MOUNTED INSTALLATION
- PAD-MOUNTED INSTALLATION
- FRAME-MOUNTED INSTALLATION

Step 3 — Inspect Unit 8
Step 4 — Provide Unit Support 8
- ROOF CURB MOUNT
- SLAB MOUNT (HORIZONTAL UNITS ONLY)
- ALTERNATE UNIT SUPPORT (IN LIEU OF CURB OR SLAB MOUNT)

Step 5 — Field Fabricate Ductwork 10
Step 6 — Rig and Place Unit 10
- POSITIONING ON CURB

Step 7 — Convert to Horizontal and Connect Ductwork (When Required) 11
Step 8 — Install Outside Air Hood 12
- ECONOMIZER HOOD PACKAGE REMOVAL AND SETUP (FACTORY OPTION)
- ECONOMIZER HOOD

Step 9 — Units with Hinged Panels Only 13
Step 10 — Install Flue Hood 13
Step 11 — Install Gas Piping 13
- FACTORY OPTION THRU-BASE CONNECTIONS (GAS CONNECTIONS)

Step 12 — Install External Condensate Trap and Line 16
Step 13 — Make Electrical Connections 17
- FIELD POWER SUPPLY
- UNITS WITH FACTORY-INSTALLED NON-FUSED DISCONNECT OR HACR
- UNITS WITHOUT FACTORY-INSTALLED NON-FUSED DISCONNECT OR HACR
- ALL UNITS
- CONVENIENCE OUTLETS
- HACR AMP RATING
- FACTORY-OPTION THRU-BASE CONNECTIONS (ELECTRICAL CONNECTIONS)
- UNITS WITHOUT THRU-BASE CONNECTIONS (ELECTRICAL CONNECTIONS)
- FIELD CONTROL WIRING
- THERMOSTAT
- HEAT ANTICIPATOR SETTINGS
- HUMIDI-MIZER® CONTROL CONNECTIONS
- TYPICAL UNIT WIRING DIAGRAMS

Integrated Gas Controller 29
EconoMi$er® X (Factory Option) 32
- SYSTEM COMPONENTS
- SPECIFICATIONS
- INPUTS
- OUTPUTS
- ENVIRONMENTAL
- ECONOMIZER MODULE WIRING DETAILS
- S-BUS SENSOR WIRING
- CO2 SENSOR WIRING
- INTERFACE OVERVIEW
- SETUP AND CONFIGURATION
- TIME-OUT AND SCREENSAVER
- ENTHALPY SETTINGS
- STANDARD OR SINGLE SPEED FAN OPERATION
- 2 SPEED FAN OPERATION
- 2SP H/C (2 SPEED HEAT/COOL) FAN OPERATION
- 3 SPEED FAN OPERATION (SINGLE PHASE UNITS ONLY)
- CHECKOUT
- TROUBLESHOOTING

RTU Open Controller (Factory Option) 44
SystemVu™ Controller (Factory Option) 44
Controller Options 44
- LOW AMBIENT

Smoke Detectors 44
Step 14 — Adjust Factory-Installed Options 46
- SMOKE DETECTORS
- ECONOMI$ER IV OCCUPANCY SWITCH

Step 15 — Install Accessories 46
Step 16 — Fan Speed Set Up 46
- UNITS WITH ELECTRO-MECHANICAL CONTROLS
- UNITS WITH SYSTEMVU™ CONTROLS

START-UP CHECKLIST CL-1

Manufacturer reserves the right to discontinue, or change at any time, specifications or designs without notice and without incurring obligations.

SAFETY CONSIDERATIONS

Installation and servicing of air-conditioning equipment can be hazardous due to system pressure and electrical components. Only trained and qualified service personnel should install, repair, or service air-conditioning equipment.

Untrained personnel can perform basic maintenance functions of cleaning coils and filters and replacing filters. All other operations should be performed by trained service personnel. When working on air-conditioning equipment, observe precautions in the literature, tags and labels attached to the unit, and other safety precautions that may apply.

Follow all safety codes, including ANSI (American National Standards Institute) Z223.1. Wear safety glasses and work gloves. Use quenching cloth for unbrazing operations. Have fire extinguisher available for all brazing operations.

It is important to recognize safety information. This is the safety-alert symbol ⚠. When you see this symbol on the unit and in instructions or manuals, be alert to the potential for personal injury.

Understand the signal words DANGER, WARNING, CAUTION, and NOTE. These words are used with the safety-alert symbol. DANGER identifies the most serious hazards which **will** result in severe personal injury or death. WARNING signifies hazards which **could** result in personal injury or death. CAUTION is used to identify unsafe practices, which **may** result in minor personal injury or product and property damage. NOTE is used to highlight suggestions which **will** result in enhanced installation, reliability, or operation.

⚠ DANGER

ELECTRICAL SHOCK HAZARD

Failure to follow this warning will result in personal injury or death.

Before performing service or maintenance operations on unit, turn off main power switch to unit and install lock(s) and lock-out tag(s). Ensure electrical service to rooftop unit agrees with voltage and amperage listed on the unit rating plate. Unit may have more than one power switch.

⚠ WARNING

FIRE, EXPLOSION HAZARD

Failure to follow this warning could result in death, serious personal injury and/or property damage.

Disconnect gas piping from unit when pressure testing at pressure greater than 0.5 psig (3450 Pa). Pressures greater than 0.5 psig will cause gas valve damage resulting in hazardous condition. If gas valve is subjected to pressure greater than 0.5 psig, it must be replaced before use. When pressure testing field-supplied gas piping at pressures of 0.5 psig or less, a unit connected to such piping must be isolated by closing the manual gas valve(s).

⚠ WARNING

UNIT OPERATION AND SAFETY HAZARD

Failure to follow this warning could cause personal injury, death and/or equipment damage.

R-410A refrigerant systems operate at higher pressures than standard R-22 systems. Do not use R-22 service equipment or components on R-410A refrigerant equipment.

⚠ WARNING

PERSONAL INJURY AND ENVIRONMENTAL HAZARD

Failure to follow this warning could cause personal injury or death.

Relieve pressure and recover all refrigerant before system repair or final unit disposal.

Wear safety glasses and gloves when handling refrigerants. Keep torches and other ignition sources away from refrigerants and oils.

⚠ WARNING

CARBON-MONOXIDE POISONING HAZARD

Failure to follow instructions could result in severe personal injury or death due to carbon-monoxide poisoning, if combustion products infiltrate into the building.

Check that all openings in the outside wall around the vent (and air intake) pipe(s) are sealed to prevent infiltration of combustion products into the building.

Check that furnace vent (and air intake) terminal(s) are not obstructed in any way during all seasons.

⚠ AVERTISSEMENT

RISQUE D'INTOXICATION AU MONOXYDE DE CARBONE

Si ces directives ne sont pas suivies, cela peut entraîner des blessures graves ou une intoxication au monoxyde de carbone pouvant causer la mort, si des produits de combustion s'infiltrent dans le bâtiment.

Vérifier que toutes les ouvertures pratiquées dans le mur extérieur autour du ou des tuyaux d'évent (et de la prise d'air) sont scellées de manière à empêcher l'infiltration de produits de combustion dans le bâtiment.

Veiller à ce que la ou les sorties de l'évent de l'appareil de chauffage (et la prise d'air) ne soient, en aucune façon, obstruées, quelle que soit la saison.

⚠ WARNING

FIRE HAZARD

Failure to follow this warning could result in severe personal injury and/or property damage.

Inlet pressure tap set screw must be tightened and $^1/_8$-in. NPT pipe plug must be installed to prevent gas leaks.

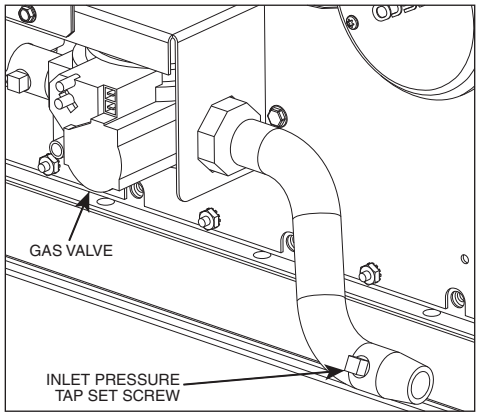

⚠ WARNING

FIRE HAZARD

Failure to follow this warning could result in severe personal injury and/or property damage.

Manifold pressure tap set screw must be tightened and 1/8-in. NPT pipe plug must be installed to prevent gas leaks.

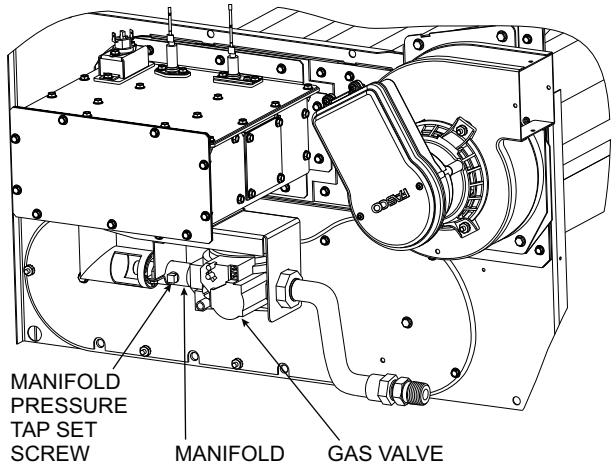

⚠ WARNING

UNIT OPERATION HAZARD

Failure to follow this warning can result in equipment damage.

Do Not adjust the inducer motor. The inducer motor is factory set; no field adjustment is required.

⚠ CAUTION

PERSONAL INJURY HAZARD

Failure to follow this caution may result in personal injury.

Sheet metal parts may have sharp edges or burrs. Use care and wear appropriate protective clothing, safety glasses and gloves when handling parts and servicing air conditioning equipment.

⚠ CAUTION

Units can not operated with LP (liquid propane) gas under any circumstances.

⚠ CAUTION

Units can not operated at altitudes greater than 2,000 feet under any circumstances.

⚠ CAUTION

Do not detach the burner box from the heat exchanger panel. If the burner box must be replaced, refer to the Service and Maintenance Instructions for the unit.

⚠ ATTENTION

A particular air odor may be experienced coming from the flue discharge during initial gas heating start up. This is normal and will subside after minimal use.

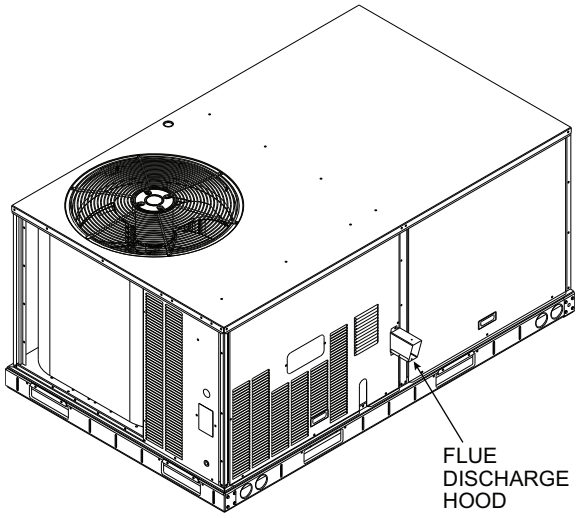

MODEL NUMBER NOMENCLATURE AND DIMENSIONS

See Fig. 1 for 48GCG model number nomenclature. See Fig. 2 for unit dimensional drawings and service clearance dimensions.

Rated Indoor Airflow

Table 1 lists the rated indoor airflow used for the AHRI efficiency rating for the units covered in this document.

Table 1 — Rated Indoor Airflow

MODEL NUMBER	RATED INDOOR AIRFLOW (CFM)
48GCG*04	1200
48GCG*05	1400
48GCG*06	2000

Position:	1	2	3	4	5	6	7	8	9	10	11	12	13	14	15	16	17	18
Example:	4	8	G	C	G	M	0	6	A	2	A	5	-	0	A	0	A	0

Unit Heat Type
48 – Gas Heat Packaged Rooftop

Model Series - WeatherMaster®
GC – High Efficiency 16 SEER

Heat Size
G = ULTRA Low NOx - Low Gas Heat (14 ng/J)
(All Ultra Low NOx models include Stainless Steel HX)

Refrig. Systems Options
M = Two Stage Cooling Models
N = Two Stage Cooling Models with Humidi-MiZer® system
P = Two Stage Cooling Models with Low Ambient

Nominal Cooling Tons
04 = 3 tons
05 = 4 tons
06 = 5 tons

Sensor Options
A = None
B = Return Air (RA) Smoke Detector
C = Supply Air (SA) Smoke Detector
D = RA and SA Smoke Detectors
E = CO_2 Sensor
F = RA Smoke Detector and CO_2 Sensor
G = SA Smoke Detector and CO_2 Sensor
H = RA and SA Smoke Detectors plus CO_2 Sensor
J = Condensate Overflow Switch
K = Condensate Overflow Switch plus RA Smoke Detector
L = Condensate Overflow Switch plus RA and SA Smoke Detectors
M = Condensate Overflow Switch plus SA Smoke Detector
N = Condensate Overflow Switch plus CO_2 Sensor
P = Condensate Overflow Switch plus CO_2 Sensor and RA Smoke Detector
Q = Condensate Overflow Switch plus CO_2 Sensor and SA Smoke Detector
R = Condensate Overflow Switch plus CO_2 Sensor, RA and SA Smoke Detectors

Vane Axial Fan - Indoor Fan Options
1 = Direct Drive – EcoBlue – Standard Static
2 = Direct Drive – EcoBlue – Medium Static
3 = Direct Drive – EcoBlue – High Static

Coil Options – (Condenser - Evaporator - Hail Guard)
A = Al/Cu - Al/Cu
B = Precoat Al/Cu - Al/Cu
C = E-coat Al/Cu - Al/Cu
D = E-coat Al/Cu - E-coat Al/Cu
E = Cu/Cu - Al/Cu
F = Cu/Cu - Cu/Cu
M = Al/Cu - Al/Cu — Louvered Hail Guard
N = Precoat Al/Cu - Al/Cu — Louvered Hail Guard
P = E-coat Al/Cu - Al/Cu — Louvered Hail Guard
Q = E-coat Al/Cu - E-coat Al/Cu — Louvered Hail Guard
R = Cu/Cu - Al/Cu — Louvered Hail Guard
S = Cu/Cu - Cu/Cu — Louvered Hail Guard

NOTE: On single phase (-3 voltage code) models, the following are not available as a factory-installed option:
- Humidi-MiZer System
- Coated Coils or Cu Fin Coils
- Louvered Hail Guards
- Economizer
- Powered 115 Volt Convenience Outlet

Packaging & Seismic Compliance
0 = Standard
1 = LTL

Electrical Options
A = None
B = HACR Breaker[1]
C = Non-Fused Disconnect (NFD)[2]
D = Thru-The-Base Connections
E = HACR Breaker and Thru-The-Base Connections[1]
F = Non-Fused Disconnect and Thru-The-Base Connections[2]
N = Phase Monitor/Protection
P = Phase Monitor/Protection and HACR Breaker[1]
Q = Phase Monitor/Protection and NFD[2]
R = Phase Monitor/Protection and Thru-The-Base
S = Phase Monitor/Protection, HACR Breaker, and Thru-The-Base[1]
T = Phase Monitor/Protection, NFD, and Thru-The-Base[2]

Service Options
0 = None
1 = Unpowered Convenience Outlet
2 = Powered Convenience Outlet
3 = Hinged Panels
4 = Hinged Panels and Unpowered Convenience Outlet
5 = Hinged Panels and Powered Convenience Outlet
6 = MERV-8 High Efficiency Filters
7 = MERV-8 High Efficiency Filters, Unpowered Convenience Outlet
8 = MERV-8 High Efficiency Filters, Powered Convenience Outlet
9 = MERV-8 High Efficiency Filters, Hinged Panels
A = MERV-8 High Efficiency Filters, Hinged Panels, Unpowered Convenience Outlet
B = MERV-8 High Efficiency Filters, Hinged Panels, Powered Convenience Outlet
C = Foil Faced Insulation

Air Intake / Exhaust Options
A = None
B = Temperature Economizer w/ Barometric Relief
F = Enthalpy Economizer w/ Barometric Relief
U = Temperature Ultra Low Leak Economizer w/ Barometric Relief
W= Enthalpy Ultra Low Leak Economizer w/ Barometric Relief

Base Unit Controls
0 = Base controls set up for field-installed air management devices
2 = RTU Open Multi-Protocol Controller
3 = SystemVu™ Intelligent System Controller with Display
6 = Electro-mechanical Controls – can be used with W7220 EconoMi$er X (with Fault Detection and Diagnostic)

Design Revision
- = Factory Design Revision

Voltage
3 = 208-230/1/60
5 = 208-230/3/60
6 = 460/3/60

[1]HACR Breaker is not available for 460/3/60 voltage units.
[2]Non-Fused Disconnect is not available for 460/3/60 voltage units.

Fig. 1 — 48GCG 04-06 Model Number Nomenclature (Example)

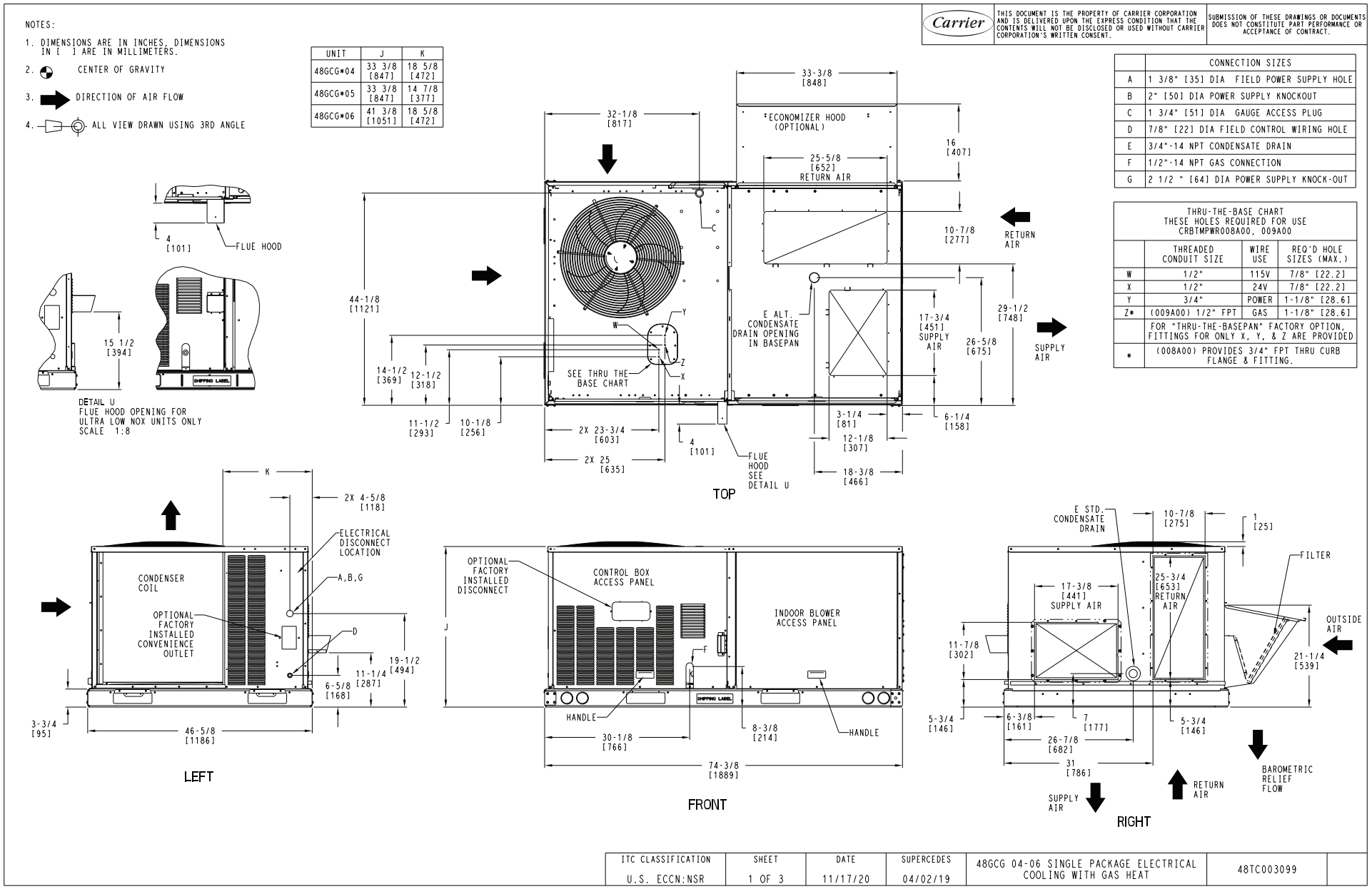

Fig. 2 — Unit Dimensional Drawing

UNIT	STD. UNIT WEIGHT **		CORNER WEIGHT (A)		CORNER WEIGHT (B)		CORNER WEIGHT (C)		CORNER WEIGHT (D)		C.G.		HEIGHT
	LBS.	KG.	LBS.	KG.	LBS.	KG.	LBS.	KG.	LBS.	KG.	X	Y	Z
48GCG*04	543	247	139	63	133	60	133	60	139	63	36 3/8 [924]	23 3/8 [594]	18 [457]
48GCG*05	585	266	149	68	143	65	143	65	149	68	36 3/8 [924]	23 3/8 [594]	18 [457]
48GCG*06	630	286	168	76	157	71	147	69	158	72	35 7/8 [911]	22 5/8 [575]	19 1/2 [489]

**- STANDARD UNIT WEIGHT IS WITHOUT PACKAGING.
FOR OTHER OPTIONS AND ACCESSORIES REFER TO THE PRODUCT DATA CATALOG.

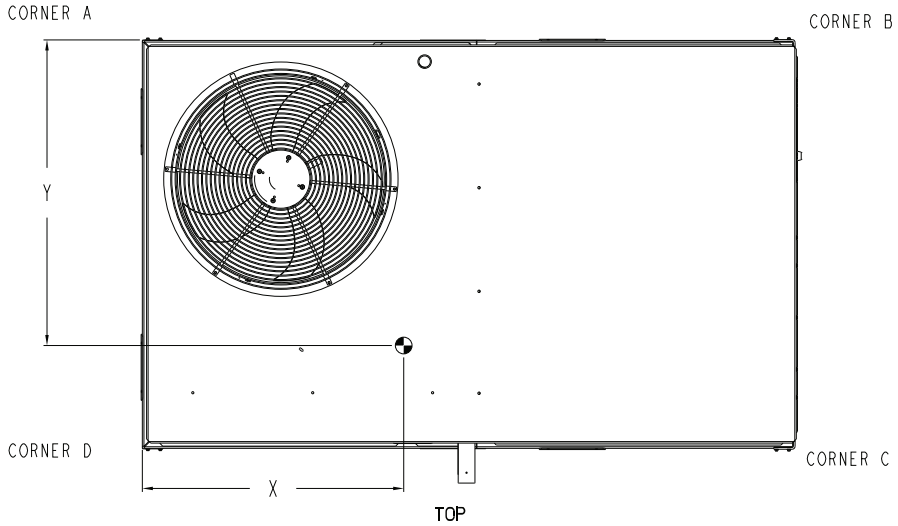

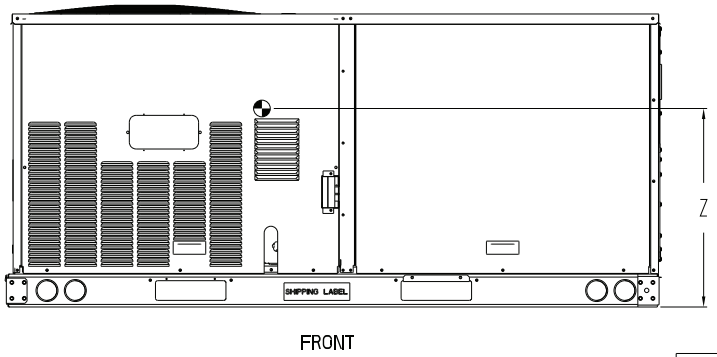

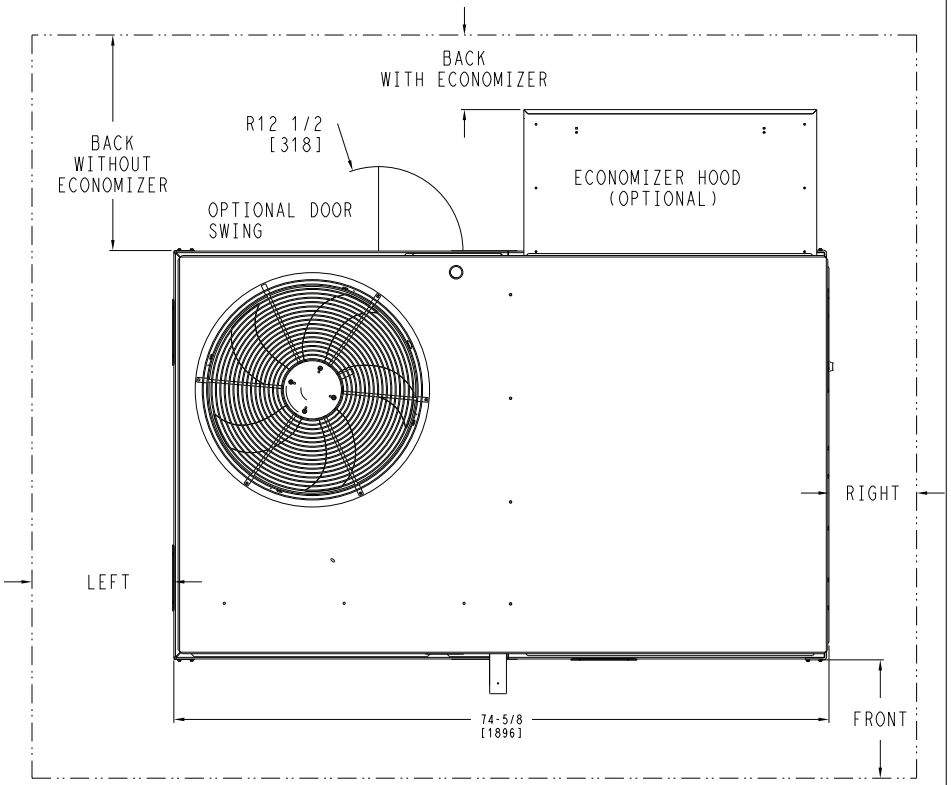

NOTES:

1. FOR ALL MINIMUM CLEARANCES LOCAL CODES OR JURISDICTIONS MAY PREVAIL.

CLEARANCE			
	SERVICE WITH:	SERVICE WITH:	OPERATING
SURFACE	CONDUCTIVE BARRIER	NONCONDUCTIVE BARRIER	CLEARANCE
FRONT	48 [1219mm]	36 [914mm]	18 [457mm]
LEFT	48 [1219mm]	42 [1067mm]	18 [457mm]
BACK W/O HOOD	48 [1219mm]	42 [1067mm]	18 [457mm]
BACK W/HOOD	36 [914mm]	36 [914mm]	18 [457mm]
RIGHT	36 [914mm]	36 [914mm]	18 [457mm]
TOP	72 [1829mm]	72 [1829mm]	72 [1829mm]

ITC CLASSIFICATION	SHEET	DATE	SUPERCEDES	48GCG 04-06 SINGLE PACKAGE ELECTRICAL COOLING WITH GAS HEAT	48TC003099
U.S. ECCN:NSR	2 OF 3	11/17/20	04/02/19		

Carrier
THIS DOCUMENT IS THE PROPERTY OF CARRIER CORPORATION AND IS DELIVERED UPON THE EXPRESS CONDITION THAT THE CONTENTS WILL NOT BE DISCLOSED OR USED WITHOUT CARRIER CORPORATION'S WRITTEN CONSENT.
SUBMISSION OF THESE DRAWINGS OR DOCUMENTS DOES NOT CONSTITUTE PART PERFORMANCE OR ACCEPTANCE OF CONTRACT.

Fig. 2 — Unit Dimensional Drawing (cont)

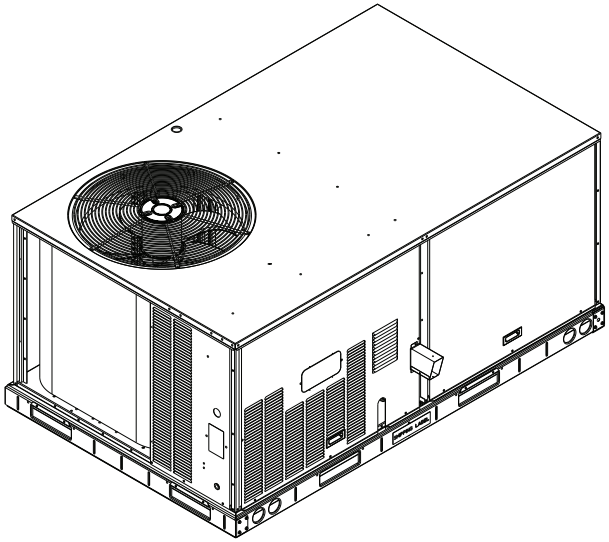

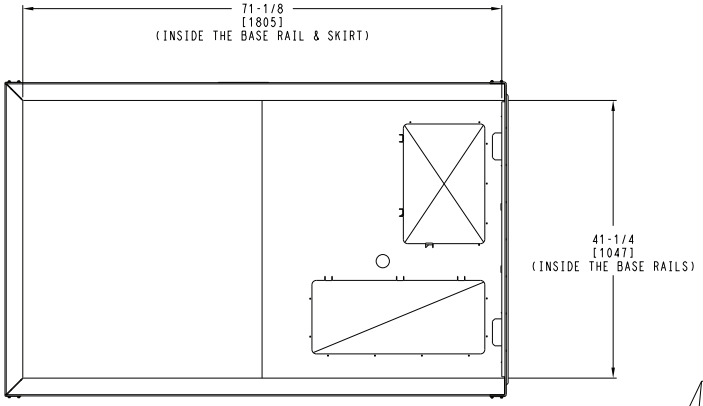

INSIDE BASERAIL DIMENSIONS

BOTTOM

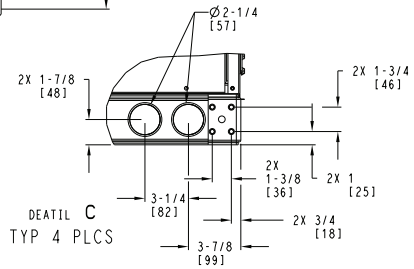

DEATIL C

TYP 4 PLCS

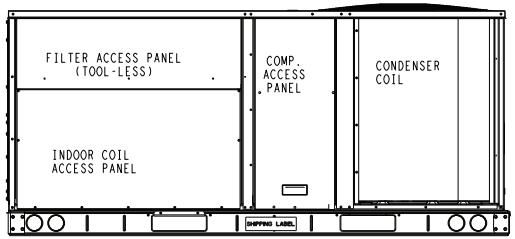

BACK

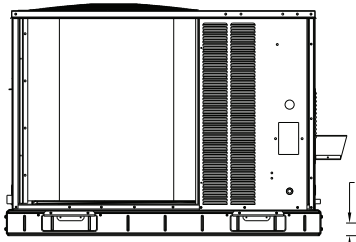

LEFT

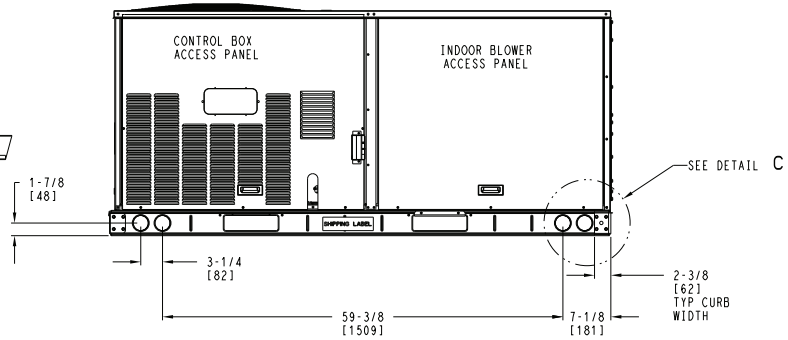

FRONT

Carrier

THIS DOCUMENT IS THE PROPERTY OF CARRIER CORPORATION AND IS DELIVERED UPON THE EXPRESS CONDITION THAT THE CONTENTS WILL NOT BE DISCLOSED OR USED WITHOUT CARRIER CORPORATION'S WRITTEN CONSENT.

SUBMISSION OF THESE DRAWINGS OR DOCUMENTS DOES NOT CONSTITUTE PART PERFORMANCE OR ACCEPTANCE OF CONTRACT.

ITC CLASSIFICATION	SHEET	DATE	SUPERCEDES		
U.S. ECCN:NSR	3 OF 3	11/17/20	04/02/19	48GCG 04-06 SINGLE PACKAGE ELECTRICAL COOLING WITH GAS HEAT	48TC003099

Fig. 2 — Unit Dimensional Drawing (cont)

INSTALLATION

Jobsite Survey

Complete the following checks before installation.

1. Consult local building codes and the NEC (National Electrical Code) ANSI/NFPA 70 for special installation requirements.
2. Determine unit location (from project plans) or select unit location.
3. Check for possible overhead obstructions which may interfere with unit lifting or rigging.

Step 1 — Plan for Unit Location

Select a location for the unit and its support system (curb or other) that provides for the minimum clearances required for safety. This includes the clearance to combustible surfaces, unit performance and service access below, around and above unit as specified in unit drawings. See Fig. 2 on page 6.

NOTE: Consider also the effect of adjacent units.

Be sure that unit is installed such that snow will not block the combustion intake or flue outlet.

Unit may be installed directly on wood flooring or on Class A, B, or C roof-covering material when roof curb is used.

Do not install unit in an indoor location. Do not locate air inlets near exhaust vents or other sources of contaminated air. For proper unit operation, adequate combustion and ventilation air must be provided in accordance with Section 5.3 (Air for Combustion and Ventilation) of the National Fuel Gas Code, ANSI Z223.1 (American National Standards Institute) and NFPA (National Fire Protection Association) 54 TIA-54-84-1. In Canada, installation must be in accordance with the CAN1-B149 installation codes for gas burning appliances.

Although unit is weatherproof, avoid locations that permit water from higher level runoff and overhangs to fall onto the unit.

Locate mechanical draft system flue assembly at least 4 ft (1.2 m) from any opening through which combustion products could enter the building, and at least 4 ft (1.2 m) from any adjacent building (or per local code). Locate the flue assembly at least 10 ft (3.05 m) from an adjacent unit's fresh air intake hood if within 3 ft (0.91 m) of same elevation (or per local code). When unit is located adjacent to public walkways, flue assembly must be at least 7 ft (2.1 m) above grade.

Select a unit mounting system that provides adequate height to allow installation of condensate trap per requirements. Refer to Install External Condensate Trap and Line on page 16 for required trap dimensions.

ROOF MOUNT

Check building codes for weight distribution requirements. Unit operating weights are shown in Table 2.

Table 2 — Operating Weights

48GCG-	UNIT lb (kg)		
	04	05	06
Base Unit	543 (247)	585 (266)	630 (286)
Economizer			
Vertical	50 (23)	50 (23)	50 (23)
Horizontal	80 (36)	80 (36)	80 (36)
Humidi-MiZer® System	27 (10)	34 (13)	34 (13)
Cu Fins	25 (11)	43 (20)	56 (25)
Powered Outlet	35 (16)	35 (16)	35 (16)
Curb			
14-in. (356 mm)	110 (50)	110 (50)	110 (50)
24-in. (610 mm)	145 (66)	145 (66)	145 (66)

Step 2 — Plan for Sequence of Unit Installation

The support method used for this unit will dictate different sequences for the steps of unit installation. For example, on curb-mounted units, some accessories must be installed on the unit before the unit is placed on the curb. Review the following for recommended sequences for installation steps.

CURB-MOUNTED INSTALLATION

1. Install curb
2. Install field-fabricated ductwork inside curb
3. Install accessory thru-base service connection package (affects curb and unit) (refer to accessory installation instructions for details)
4. Prepare bottom condensate drain connection to suit planned condensate line routing (refer to Install External Condensate Trap and Line on page 16 for details)
5. Rig and place unit
6. Install outdoor air hood
7. Install flue hood
8. Install gas piping
9. Install condensate line trap and piping
10. Make electrical connections
11. Install other accessories

PAD-MOUNTED INSTALLATION

1. Prepare pad and unit supports
2. Check and tighten the bottom condensate drain connection plug
3. Rig and place unit
4. Convert unit to side duct connection arrangement
5. Install field-fabricated ductwork at unit duct openings
6. Install outdoor air hood
7. Install flue hood
8. Install gas piping
9. Install condensate line trap and piping
10. Make electrical connections
11. Install other accessories

FRAME-MOUNTED INSTALLATION

Frame-mounted applications generally follow the sequence for a curb installation. Adapt the sequence as required to suit specific installation plan.

Step 3 — Inspect Unit

Inspect unit for transportation damage. File any claim with transportation agency.

Confirm before installation of unit that voltage, amperage and circuit protection requirements listed on unit data plate agree with power supply provided.

On units with hinged panel option, check to be sure all latches are snug and in closed position.

Locate the carton containing the outside air hood parts. Do not remove carton until unit has been rigged and located in final position.

Step 4 — Provide Unit Support

ROOF CURB MOUNT

Accessory roof curb details and dimensions are shown in Fig. 3. Assemble and install accessory roof curb in accordance with instructions shipped with the curb.

ROOF CURB ACCESSORY #	A
CRRFCURB001A01	14" [356]
CRRFCURB002A01	24" [610]

NOTES:
1. ROOFCURB ACCESSORY IS SHIPPED DISASSEMBLED.
2. INSULATED PANELS: 25.4 [1"] THK. POLYURETHANE FOAM, 44.5 [1-3/4] # DENSITY.
3. DIMENSIONS IN [ ] ARE IN MILLIMETERS.
4. ROOFCURB: 18 GAGE STEEL.
5. ATTACH DUCTWORK TO CURB. (FLANGES OF DUCT REST ON CURB).
6. SERVICE CLEARANCE 4 FEET ON EACH SIDE.
7. ▨ DIRECTION OF AIR FLOW.
8. CONNECTOR PACKAGE CRBTMPWR001A01 IS FOR THRU-THE-CURB GAS TYPE PACKAGE CRBTMPWR003A01 IS FOR THRU-THE-BOTTOM TYPE GAS CONNECTIONS.

CONNECTOR PKG. ACC.	GAS CONNECTION TYPE	GAS FITTING	POWER WIRING FITTING	CONTROL WIRING FITTING	ACCESSORY CONVENIENCE OUTLET WIRING CONNECTOR
CRBTMPWR001A01	THRU THE CURB	3/4" [19] NPT	3/4" [19] NPT	1/2" [12.7] NPT	1/2" [12.7] NPT
CRBTMPWR003A01	THRU THE BOTTOM	1/2" [12.7] NPT			

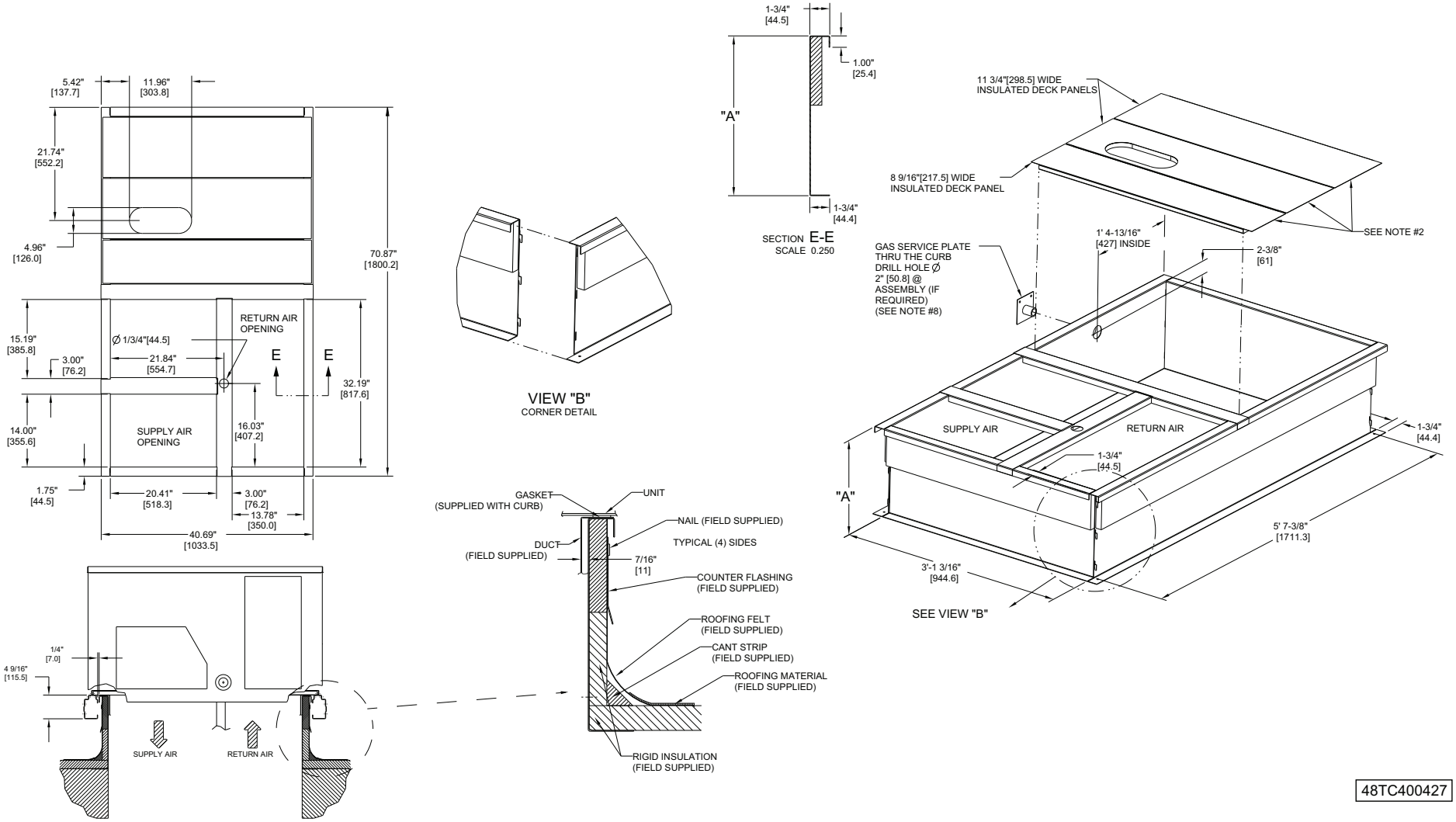

Fig. 3 — Roof Curb Details

NOTE: The gasketing of the unit to the roof curb is critical for a watertight seal. Install gasket supplied with the roof curb as shown in Fig. 3. Improperly applied gasket can also result in air leaks and poor unit performance.

Curb should be level. This is necessary for unit drain to function properly. Unit leveling tolerances are shown in Fig. 4. Refer to Accessory Roof Curb Installation Instructions for additional information as required.

Install insulation, cant strips, roofing felt, and counter flashing as shown. Ductwork must be attached to curb and not to the unit. The accessory thru-the-base power and gas connection package must be installed before the unit is set on the roof curb. If field-installed thru-the-roof curb gas connections are desired, use factory-supplied 1/2-in. pipe coupling and gas plate assembly to mount the thru-the-roof curb connection to the roof curb. Gas connections and power connections to the unit must be field-installed after the unit is installed on the roof curb.

If electric and control wiring is to be routed through the basepan, attach the accessory thru-the-base service connections to the basepan in accordance with the accessory installation instructions.

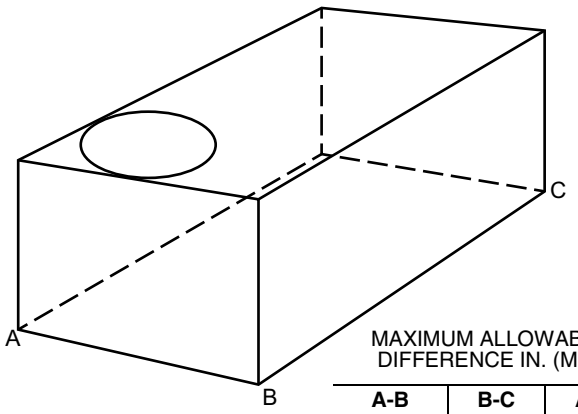

MAXIMUM ALLOWABLE DIFFERENCE IN. (MM)

A-B	B-C	A-C
0.5 (13)	1.0 (25)	1.0 (25)

Fig. 4 — Unit Leveling Tolerances

SLAB MOUNT (HORIZONTAL UNITS ONLY)

Provide a level concrete slab that extends a minimum of 6-in. (150 mm) beyond unit cabinet. Install a gravel apron in front of condenser coil air inlet to prevent grass and foliage from obstructing airflow.

NOTE: Horizontal units may be installed on a roof curb if required.

ALTERNATE UNIT SUPPORT (IN LIEU OF CURB OR SLAB MOUNT)

A non-combustible sleeper rail can be used in the unit curb support area. If sleeper rails cannot be used, support the long sides of the unit with a minimum of 3 equally spaced 4-in. x 4-in. (102 mm x 102 mm) pads on each side.

Step 5 — Field Fabricate Ductwork

Cabinet return-air static pressure (a negative condition) shall not exceed 0.35 in. wg (87 Pa) with economizer or 0.45 in. wg (112 Pa) without economizer.

For vertical ducted applications, secure all ducts to roof curb and building structure. Do not connect ductwork to unit.

Fabricate supply ductwork so that the cross sectional dimensions are equal to or greater than the unit supply duct opening dimensions for the first 18-in. (458 mm) of duct length from the unit basepan.

Insulate and weatherproof all external ductwork, joints, and roof openings with counter flashing and mastic in accordance with applicable codes.

Ducts passing through unconditioned spaces must be insulated and covered with a vapor barrier.

If a plenum return is used on a vertical unit, the return should be ducted through the roof deck to comply with applicable fire codes.

A minimum clearance is not required around ductwork.

Step 6 — Rig and Place Unit

⚠ CAUTION

PROPERTY DAMAGE HAZARD

Failure to follow this caution may result in damage to roofing materials.

Membrane roofs can be cut by sharp sheet metal edges. Be careful when placing any sheet metal parts on such roof.

Keep unit upright and do not drop. Spreader bars are required. Rollers may be used to move unit across a roof. Rigging materials under unit (cardboard or wood) must be removed PRIOR to placing the unit on the roof curb. Level by using unit frame as a reference. See Table 2 and Fig. 5 for additional information.

Lifting holes are provided in base rails as shown in Fig. 5. Refer to rigging instructions on unit.

Rigging materials under unit (cardboard to prevent base pan damage) must be removed PRIOR to placing the unit on the roof curb.

When using the standard side drain connection, ensure the red plug in the alternate bottom connection is tight. Do this before setting the unit in place. The red drain plug an be tightened with a 1/2-in. square socket drive extension. For further details, see "Install External Condensate Trap and Line" on page 16.

Before setting the unit onto the curb, recheck gasketing on curb.

POSITIONING ON CURB

⚠ CAUTION

UNIT DAMAGE HAZARD

Failure to follow this caution may result in equipment damage.

All panels must be in place when rigging. Unit is not designed for handling by fork truck when packaging is removed.

If using top crate as spreader bar, once unit is set, carefully lower wooden crate off building roof top to ground. Ensure that no people or obstructions are below prior to lowering the crate.

Position unit on roof curb so that the following clearances are maintained: 1/4-in. (6.4 mm) clearance between the roof curb and the base rail inside the front and rear, 0.0-in. clearance between the roof curb and the base rail inside on the duct end of the unit. This will result in the distance between the roof curb and the base rail inside on the condenser end of the unit being approximately 1/4-in. (6.4 mm).

Although unit is weatherproof, guard against water from higher level runoff and overhangs.

Flue vent discharge must have a minimum horizontal clearance of 4 ft (1220 mm) from electric and gas meters, gas regulators, and gas relief equipment. Minimum distance between unit and other electrically live parts is 48-in. (1220 mm).

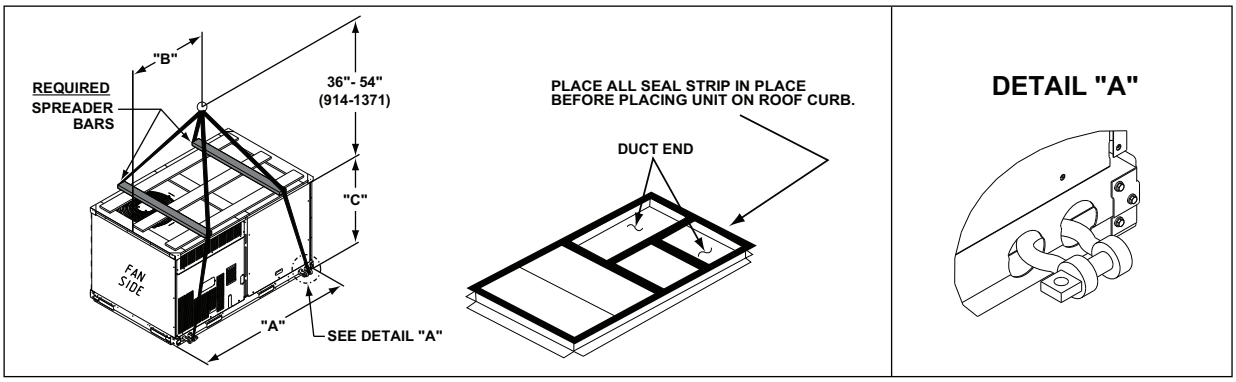

UNIT	MAX WEIGHT		DIMENSIONS					
			A		B		C	
	lb	kg	in.	mm	in.	mm	in.	mm
48GCG*04	815	370	74.5	1890	36.5	925	33.5	850
48GCG*05	902	409	74.5	1890	36.5	925	33.5	850
48GCG*06	1008	457	74.5	1890	36.0	915	41.5	1055

NOTES:
1. SPREADER BARS ARE REQUIRED. Top damage will occur if spreader bars are not used.
2. Dimensions in () are in millimeters.
3. Hook rigging shackles through holes in base rail, as shown in Detail A. Holes in base rails are centered around the unit center of gravity. Use wooden top to prevent rigging straps from damaging unit.

Fig. 5 — Rigging Details

Flue gas can deteriorate building materials. Orient unit such that flue gas will not affect building materials. Locate mechanical draft system flue assembly at least 48-in. (1220 mm) from an adjacent building or combustible material. between unit and other electrically live parts is 48-in. (1220 mm).

NOTE: Installation of accessory flue discharge deflector kit will reduce the minimum clearance to combustible material to 18-in. (460 mm).

After unit is in position, remove rigging skids and shipping materials.

Step 7 — Convert to Horizontal and Connect Ductwork (When Required)

Unit is shipped in the vertical duct configuration. Unit without factory-installed economizer or return-air smoke detector option may be field-converted to horizontal ducted configuration. To convert to horizontal configuration, remove screws from side duct opening covers (see Fig. 6) and remove covers. Use the screws to install the covers on vertical duct openings with the insulation-side down. The panels must be inserted into the notches on the basepan to properly seal. The notches are covered by the tape used to secure the insulation to the basepan and are not easily seen. See Fig. 7 for position of the notches in the basepan. Seals around duct openings must be tight. Secure with screws as shown in Fig. 8. Cover seams with foil duct tape.

Field-supplied flanges should be attached to horizontal duct openings and all ductwork should be secured to the flanges. Insulate and weatherproof all external ductwork, joints, and roof or building openings with counter flashing and mastic in accordance with applicable codes.

Do not cover or obscure visibility to the unit's informative data plate when insulating horizontal ductwork.

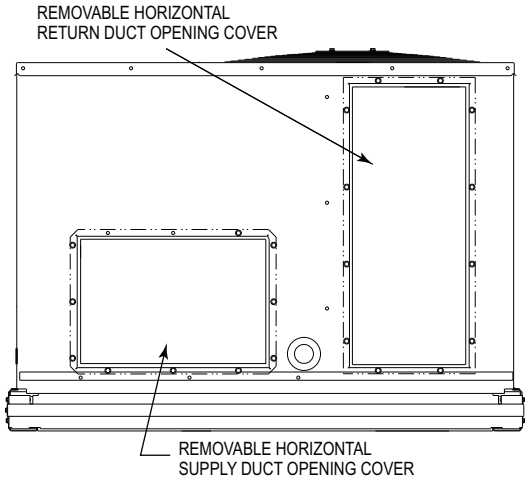

Fig. 6 — Horizontal Conversion Panels

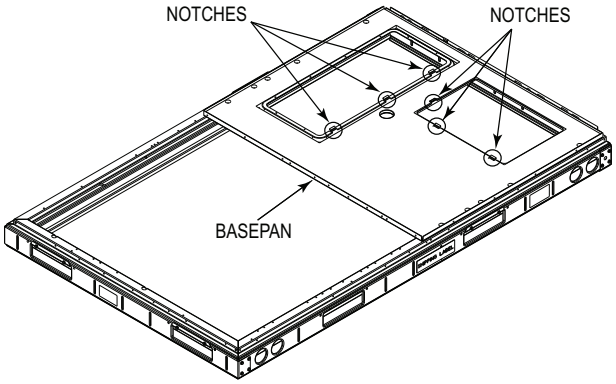

Fig. 7 — Location of Notches

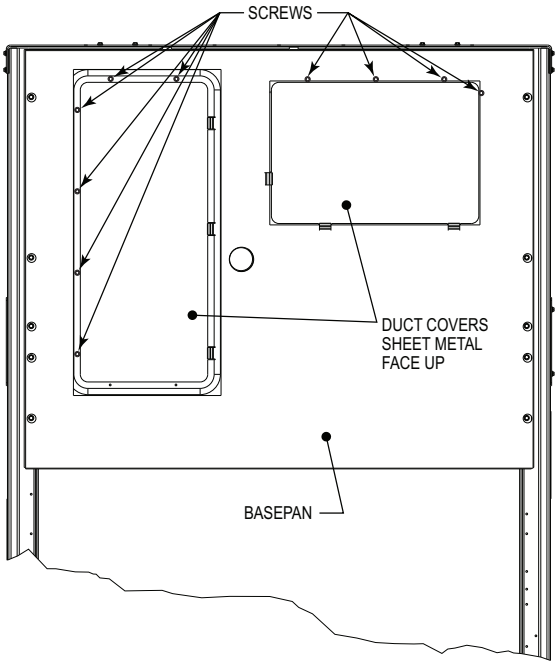

Fig. 8 — Horizontal Duct Panels In Place

Step 8 — Install Outside Air Hood

ECONOMIZER HOOD PACKAGE REMOVAL AND SETUP (FACTORY OPTION)

NOTE: Economizer is not available as factory installed options for single phase (-3 voltage code) models.

The hood is shipped in knock-down form and must be field assembled. The indoor coil access panel is used as the hood top while the hood sides, divider and filter are packaged together, attached to a metal support tray using plastic stretch wrap, and shipped in the return air compartment behind the indoor coil access panel. The hood assembly's metal tray is attached to the basepan and also attached to the damper using two plastic tie-wraps.

1. To gain access to the hood, remove the filter access panel. See Fig. 9.
2. Locate the (2) screws holding the metal tray to the basepan and remove. Locate and cut the (2) plastic tie-wraps securing the assembly to the damper. See Fig. 10. Be careful to not damage any wiring or cut tie-wraps securing any wiring.
3. Carefully lift the hood assembly (with metal tray) through the filter access opening and assemble per the steps outlined in the following section (Economizer Hood).

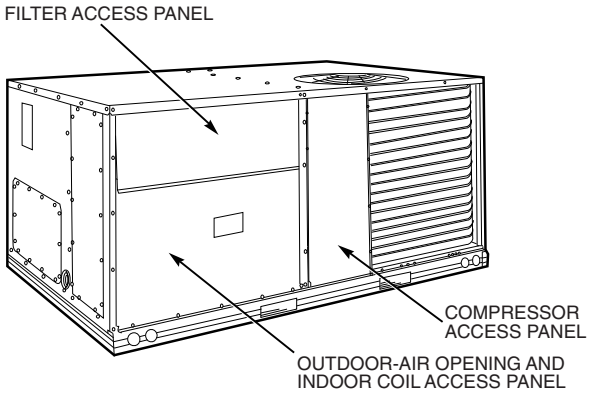

Fig. 9 — Typical Access Panel Locations

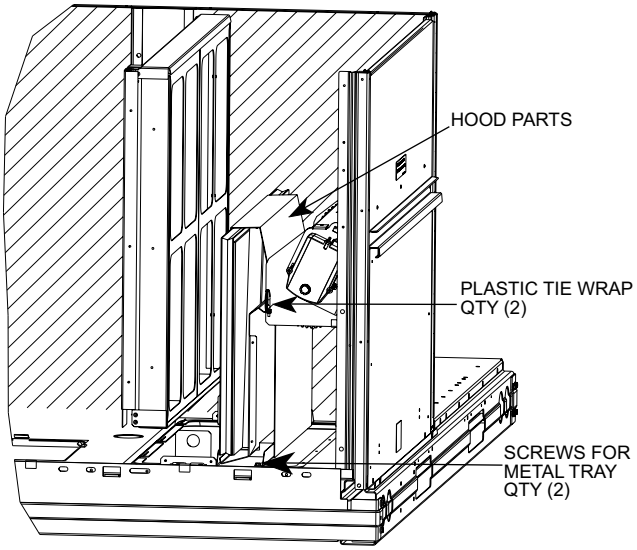

Fig. 10 — Economizer Hood Parts Location

ECONOMIZER HOOD

NOTE: If the power exhaust accessory is to be installed on the unit, the hood shipped with the unit will not be used and must be discarded. Save the aluminum filter for use in the power exhaust hood assembly.

1. The indoor coil access panel will be used as the top of the hood. Remove the screws along the sides and bottom of the indoor coil access panel. See Fig. 11.
2. Swing out indoor coil access panel and insert the hood sides under the panel (hood top). Use the screws provided to attach the hood sides to the hood top. Use screws provided to attach the hood sides to the unit. See Fig. 12.
3. Remove the shipping tape holding the economizer barometric relief damper in place (economizer only).
4. Insert the hood divider between the hood sides. See Fig. 12 and 13. Secure hood divider with 2 screws on each hood side. The hood divider is also used as the bottom filter rack for the aluminum filter.
5. Open the filter clips which are located underneath the hood top. Insert the aluminum filter into the bottom filter rack (hood divider). Push the filter into position past the open filter clips. Close the filter clips to lock the filter into place. See Fig. 13.
6. Caulk the ends of the joint between the unit top panel and the hood top.
7. Replace the filter access panel.

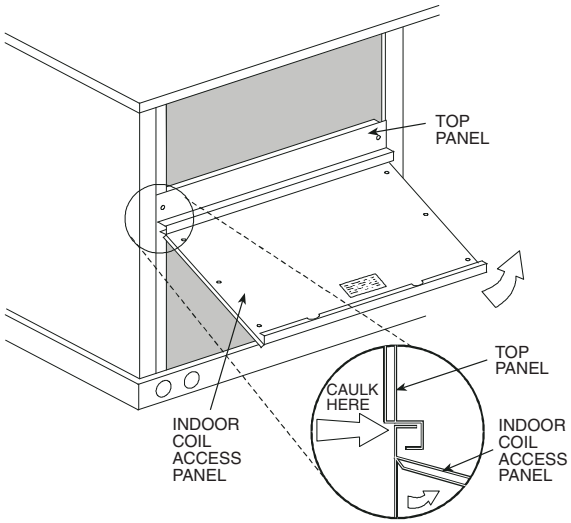

Fig. 11 — Indoor Coil Access Panel Relocation

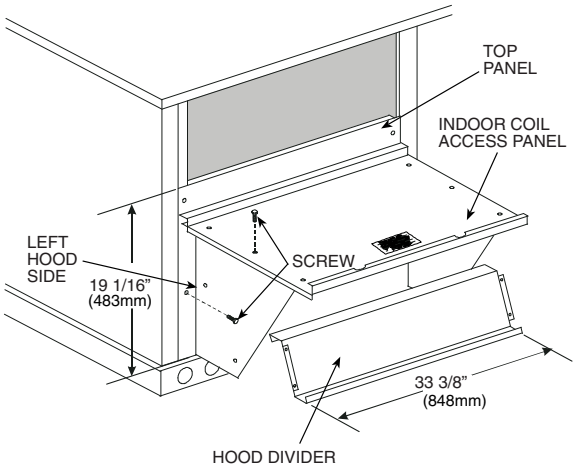

Fig. 12 — Economizer Hood Construction

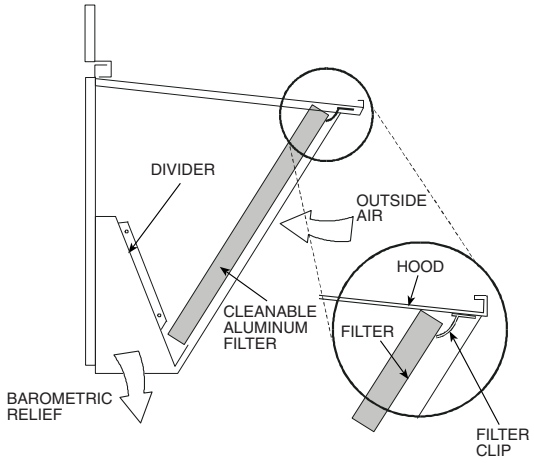

Fig. 13 — Economizer Filter Installation

Step 9 — Units with Hinged Panels Only

If the unit does not have hinged panels, skip this step and continue at Step 10.

Relocate latch shipped inside the compressor compartment behind the hinged compressor door to location shown in Fig. 14 after unit installation.

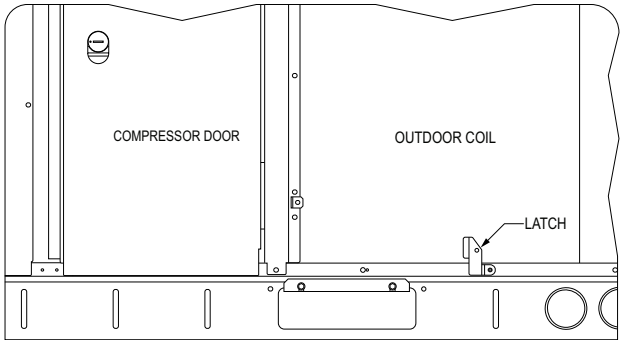

Fig. 14 — Compressor Door Latch Location

Step 10 — Install Flue Hood

Flue hood is shipped screwed to the basepan beside the burner compartment access panel. Remove from shipping location and using screws provided, install flue hood and screen in location shown in Fig. 15.

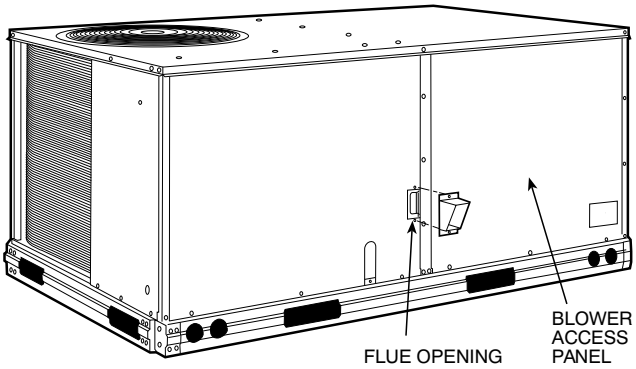

Fig. 15 — Flue Hood Details

Step 11 — Install Gas Piping

Installation of the gas piping must be accordance with local building codes and with applicable national codes. In U.S.A., refer to NFPA 54/ANSI Z223.1 National Fuel Gas Code (NFGC). In Canada, installation must be accordance with the CAN/CSA B149.1 and CAN/CSA B149.2 installation codes for gas burning appliances.

This unit is factory equipped for use with Natural Gas (NG) fuel at elevations up to 2000 ft (610 m) above sea level.

Furnace gas input rate on rating plate is for installation up to 2000 ft (610 m) above sea level.

⚠ CAUTION

Units can not operated at altitudes greater than 2,000 feet under any circumstances.

For natural gas applications, gas pressure at unit gas connection must not be less than 5 in. wg (1246 Pa) or greater than 11 in. wg (2740 Pa) while the unit is operating. See Table 3.

Table 3 — Natural Gas Supply Line Pressure Ranges

UNIT MODEL	UNIT SIZE	MIN.	MAX.
48GCG*	04, 05, 06	5.0 in. wg (1246 Pa)	11.0 in. wg (2740 Pa)

The gas supply pipe enters the unit at the burner access panel on the front side of the unit, through the long slot at the bottom of the access panel. The gas connection to the unit is made to the $^1/_2$-in. gas inlet port on the unit gas valve.

Manifold pressure is factory-adjusted for natural gas fuel use. See Table 4.

Table 4 — Natural Gas Manifold Pressure

UNIT MODEL	UNIT SIZE	MANIFOLD PRESSURE
48GCG*	04, 05, 06	3.2 in. wg (797 Pa)

⚠ CAUTION

EQUIPMENT DAMAGE

Failure to follow this caution may result in equipment damage.

When connecting the gas line to the unit gas valve, the installer MUST use a backup wrench to prevent damage to the valve.

Install a gas supply line that runs to the unit heating section. Refer to the NFPA 54/NFGC or equivalent code for gas pipe sizing data. Do not use a pipe size smaller than 1/2-in. Size the gas supply line to allow for a maximum pressure drop of 0.5 in. wg (124 Pa) between gas regulator source and unit gas valve connection when unit is operating at high-fire flow rate.

The gas supply line can approach the unit in three ways: horizontally from outside the unit (across the roof), thru-curb/under unit basepan (accessory kit required), or through unit basepan (factory option or accessory kit required). Consult accessory kit installation instructions for details on these installation methods. Observe clearance to gas line components per Fig. 16.

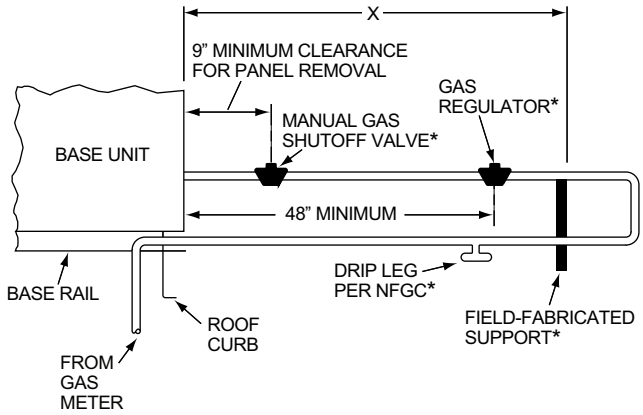

LEGEND

NFGC — National Fuel Gas Code

*Field supplied.

NOTE: Follow all local codes.

STEEL PIPE NOMINAL DIAMETERS (IN.)	SPACING OF SUPPORTS X DIMENSION (FT)
1/2	6
3/4 or 1	8
1 1/4 or larger	10

Fig. 16 — Gas Piping Guide (with Accessory Thru-the-Curb Service Connections)

FACTORY OPTION THRU-BASE CONNECTIONS (GAS CONNECTIONS)

This service connection kit consists of a 1/2-in. electrical bulkhead connector and a 3/4-in. electrical bulkhead connector, connected to an "L" bracket covering the embossed (raised) section of the unit basepan in the condenser section (see Fig. 17 for shipping position).

The 3/4-in. bulkhead connector enables the low-voltage control wires to pass through the basepan. The 1/2-in. bulkhead connector allows the high-voltage power wires to pass through the basepan. See Fig. 18.

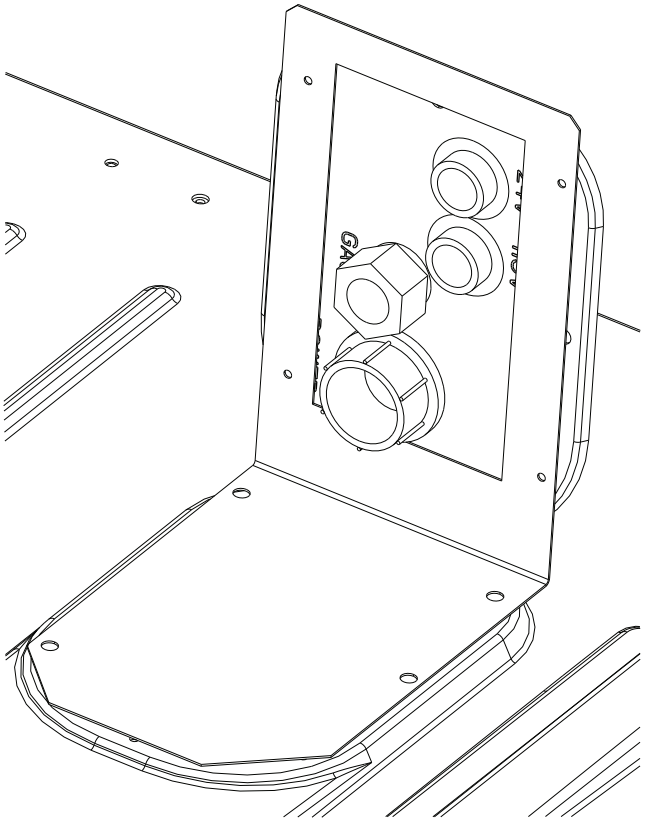

Fig. 17 — Thru-the-Base Fitting Assembly (Shown in Shipping Position)

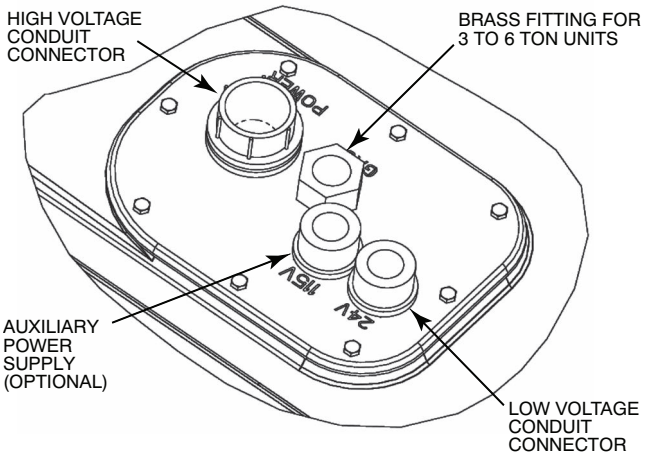

Fig. 18 — Thru-Base Connection Fittings

1. Remove the "L" bracket assembly from the unit.
2. Remove connector plate assembly from the "L" bracket and discard the "L" bracket, but retain the washer head screws and the gasket (located between the "L" bracket and the connector plate assembly).

NOTE: Take care not to damage the gasket, as it is reused in the following step.

3. Place the gasket over the embossed area in the basepan, aligning the holes in the gasket to the holes in the basepan. See Fig. 18.
4. Install the connector plate assembly to the basepan using 8 of the washer head screws.

The thru-base gas connector has male and female threads. The male threads protrude above the basepan of the unit; the female threads protrude below the basepan.

Check tightness of connector lock nuts before connecting gas piping.

Install a 1/2-in. NPT street elbow on the thru-base gas fitting. Attach a 1/2-in. pipe nipple with minimum length of 16-in. (406 mm) (field-supplied) to the street elbow and extend it through the access panel at the gas support bracket. See Fig. 19.

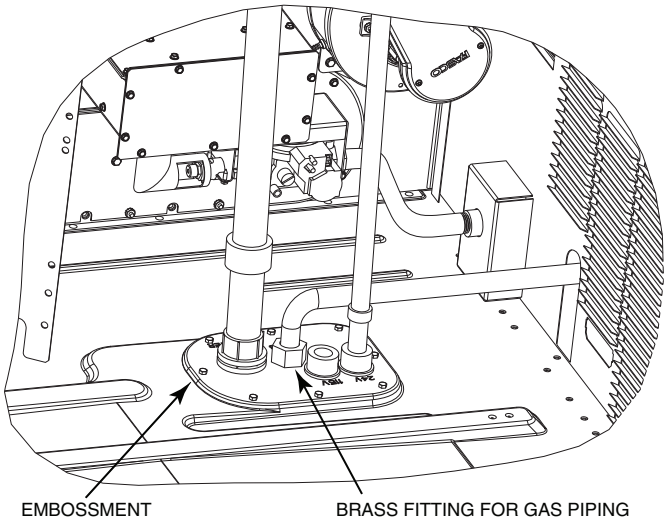

Fig. 19 — Gas Line Piping

Other hardware required to complete the installation of the gas supply line includes a manual shutoff valve, a sediment trap (drip leg) and a ground-joint union. A pressure regulator valve may also be required (to convert gas pressure from pounds to inches of pressure). The manual shutoff valve must be located within 6 ft (1.83 m) of the unit. The union, located in the final leg entering the unit, must be located at least 9-in. (230 mm) away from the access panel to permit the panel to be removed for service. If a regulator valve is installed, it must be located a minimum of 4 ft (1220 mm) away from the unit's flue outlet. Some municipal codes require that the manual shutoff valve be located upstream of the sediment trap. See Fig. 20 and 21 for typical piping arrangements for gas piping that has been routed through the sidewall of the curb. See Fig. 22 for typical piping arrangement when thru-base is used. Ensure that all piping does not block access to the unit's main control box or limit the required working space in front of the control box.

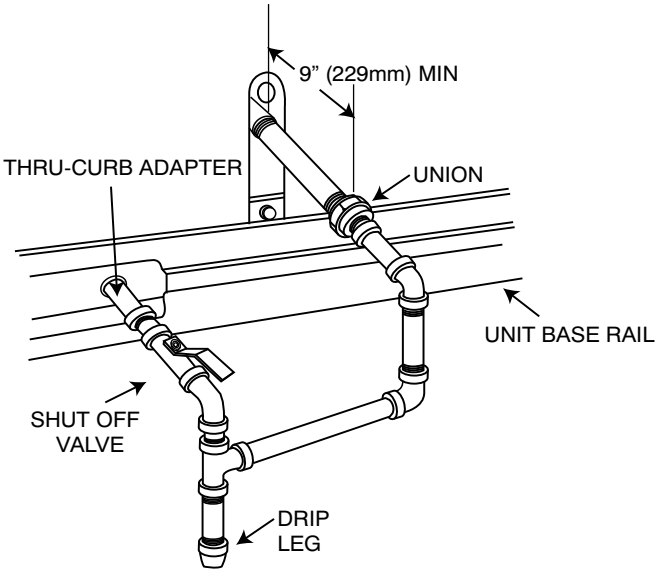

Fig. 20 — Gas Piping, Typical Curb Sidewall Piping (Example 1)

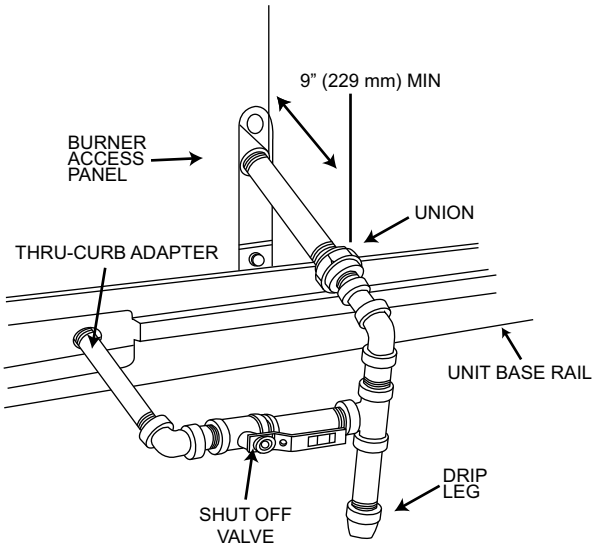

Fig. 21 — Gas Piping, Typical Curb Sidewall Piping (Example 2)

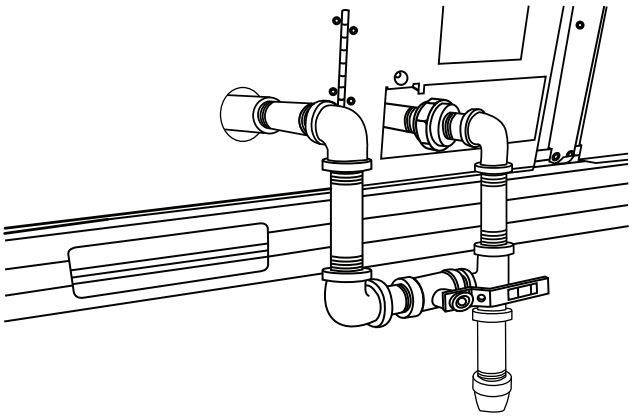

Fig. 22 — Gas Piping, Typical Thru-Base Connections

When installing the gas supply line, observe local codes pertaining to gas pipe installations. Refer to the NFPA 54/ANSI Z223.1 NFGC latest edition (in Canada, CAN/CSA B149.1). In the absence of local building codes, adhere to the following pertinent recommendations:

- Avoid low spots in long runs of pipe. Grade all pipe 1/4-in. per every 15 ft (7 mm per every 5 m) to prevent traps. Grade all horizontal runs downward to risers. Use risers to connect to heating section and to meter.
- Protect all segments of piping system against physical and thermal damage. Support all piping with appropriate straps, hangers, etc. Use a minimum of one hanger every 6 ft (1.8 m). For pipe sizes larger than 1/2-in., follow recommendations of national codes.
- Apply joint compound (pipe dope) sparingly and only to male threads of joint when making pipe connections. Use only pipe dope that is resistant to action of liquefied petroleum gases as specified by local and/or national codes. If using PTFE (Teflon[1]) tape, ensure the material is Double Density type and is labeled for use on gas lines. Apply tape per manufacturer's instructions.
- Pressure-test all gas piping in accordance with local and national plumbing and gas codes before connecting piping to unit.

1. Teflon is a registered trademark of DuPont.

NOTE: Pressure test the gas supply system after the gas supply piping is connected to the gas valve. The supply piping must be disconnected from the gas valve during the testing of the piping systems when test pressure is in excess of 0.5 psig (3450 Pa). Pressure test the gas supply piping system at pressures equal to or less than 0.5 psig (3450 Pa). The unit heating section must be isolated from the gas piping system by closing the external main manual shutoff valve and slightly opening the ground-joint union.

Check for gas leaks at the field-installed and factory-installed gas lines after all piping connections have been completed. Use soap-and-water solution (or method specified by local codes and/or regulations).

⚠WARNING

Failure to follow this warning could result in personal injury, death and/or property damage.

- Connect gas pipe to unit using a backup wrench to avoid damaging gas controls.
- Never purge a gas line into a combustion chamber.
- Never test for gas leaks with an open flame. Use a commercially available soap solution made specifically for the detection of leaks to check all connections.
- Use proper length of pipe to avoid stress on gas control manifold.

NOTE: If orifice hole appears damaged or it is suspected to have been redrilled, check orifice hole with a numbered drill bit of correct size. Never redrill an orifice. A burr-free and squarely aligned orifice hole is essential for proper flame characteristics. See Fig. 23.

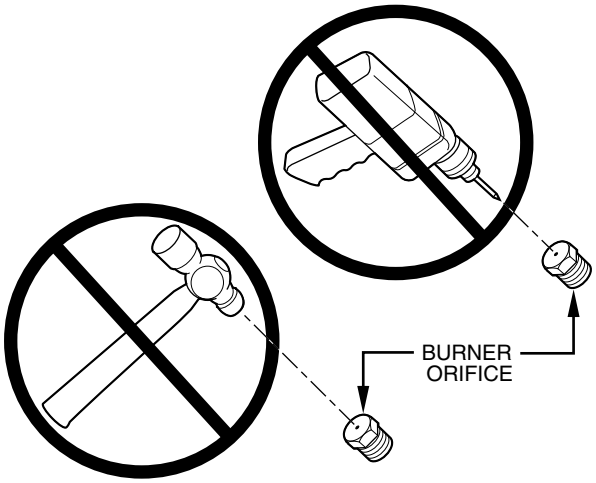

Fig. 23 — Orifice Hole

⚠ATTENTION

After the installation of the unit gas piping and prior to gas heat start up, ensure that the distances between the main burner orifice and the burner box inlet tube meet those shown below.

If not, loosen the orifice alignment screw on the bracket shown, slide the assembly to meet those distances then tighten the screw to secure the gas orifice assembly.

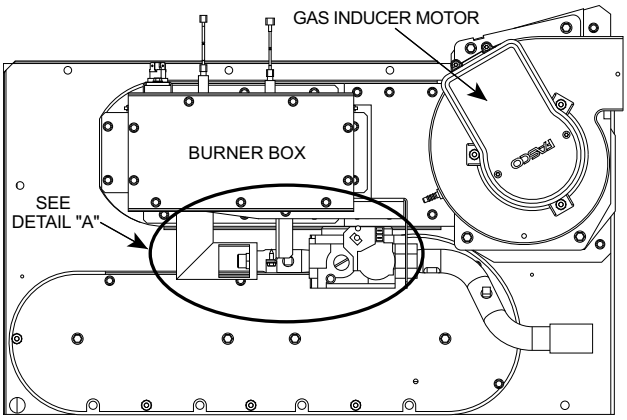

FRONT VIEW - GAS ASSEMBLY AND BURNER BOX

DETAIL "A"

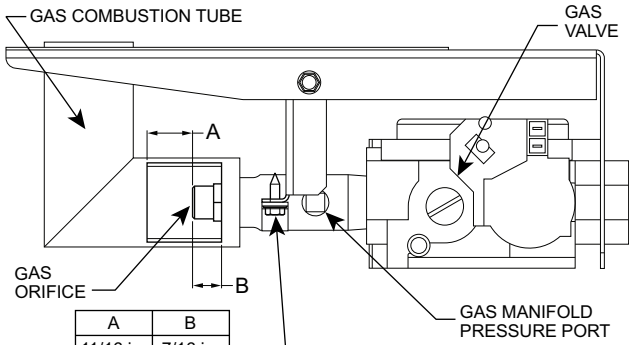

A	B
11/16 in.	7/16 in.
17.4 mm	11.1 mm

Step 12 — Install External Condensate Trap and Line

The unit has one 3/4-in. condensate drain connection on the end of the condensate pan and an alternate connection on the bottom. See Fig. 24. Unit airflow configuration does not determine which drain connection to use. Either drain connection can be used with vertical or horizontal applications.

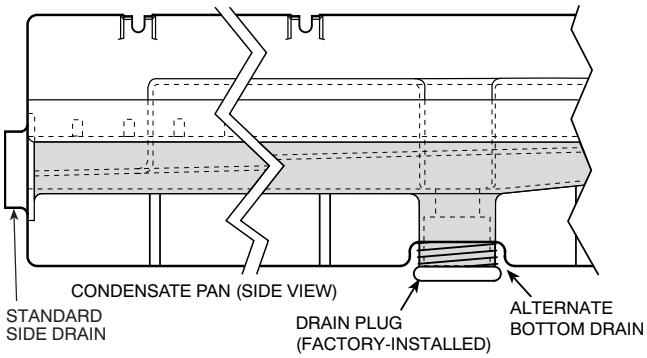

Fig. 24 — Condensate Drain Pan (Side View)

When using the standard side drain connection, ensure the red plug in the alternate bottom connection is tight. Do this before setting the unit in place. The red drain pan can be tightened with a 1/2-in. square socket drive extension.

To use the alternate bottom drain connection, remove the red drain plug from the bottom connection (use a 1/2-in. square socket drive extension) and install it in the side drain connection.

The piping for the condensate drain and external trap can be completed after the unit is in place. See Fig. 25.

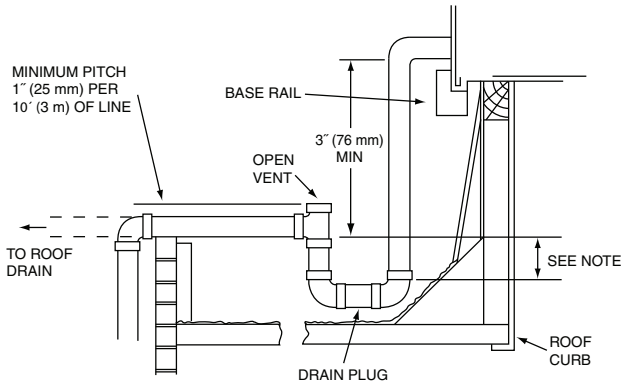

NOTE: Trap should be deep enough to offset maximum unit static difference. A 4-in. (102 mm) trap is recommended.

Fig. 25 — Condensate Drain Pan Piping Details

All units must have an external trap for condensate drainage. Install a trap at least 4-in. (102 mm) deep and protect against freeze-up. If drain line is installed downstream from the external trap, pitch the line away from the unit at 1-in. per 10 ft (25 mm per 3 m) of run. Do not use a pipe size smaller than the unit connection (3/4-in.).

Step 13 — Make Electrical Connections

⚠ WARNING

Failure to follow this warning could result in personal injury or death.

Do not use gas piping as an electrical ground.

Unit cabinet must have an uninterrupted, unbroken electrical ground to minimize the possibility of personal injury if an electrical fault should occur. This ground may consist of electrical wire connected to unit ground lug in control compartment, or conduit approved for electrical ground when installed in accordance with NEC (National Electrical Code); ANSI/NFPA 70, latest edition (in Canada, Canadian Electrical Code CSA [Canadian Standards Association] C22.1), and local electrical codes.

NOTE: Field-supplied wiring shall conform with the limitations of minimum 63°F (33°C) rise.

FIELD POWER SUPPLY

If equipped with optional powered convenience outlet, the power source leads to the convenience outlet's transformer primary are not factory connected. Installer must connect these leads according to required operation of the convenience outlet. If an always-energized convenience outlet operation is desired, connect the source leads to the line side of the unit-mounted disconnect. (Check with local codes to ensure this method is acceptable in your area.) If a de-energize via unit disconnect switch operation of the convenience outlet is desired, connect the source leads to the load side of the unit disconnect. On a unit without a unit-mounted disconnect, connect the source leads to compressor contactor C and indoor fan contactor IFC pressure lugs with unit field power leads. See Convenience Outlets on page 19 for power transformer connections.

The field power wires are connected to the unit at line-side pressure lugs on compressor contactor C and indoor fan contactor IFC (see wiring diagram label for control box component arrangement) or at factory-installed option non-fused disconnect switch or HACR. Maximum wire size is #2ga AWG (copper only) per pole on contactors and #2ga AWG (copper only) per pole on optional disconnect or HACR. See Fig. 26 and unit label diagram for field power wiring connections.

NOTE: Unit may be equipped with short test leads (pigtails) on the field line connection points on contactor C or optional disconnect switch. These leads are for factory-run test purposes only; remove and discard before connecting field power wires to unit connection points. Make field power connections directly to line connection pressure lugs only. See Fig. 27.

⚠ WARNING

FIRE HAZARD

Failure to follow this warning could result in personal injury, death, or property damage.

Do not connect aluminum wire between disconnect switch and unit. Use only copper wire.

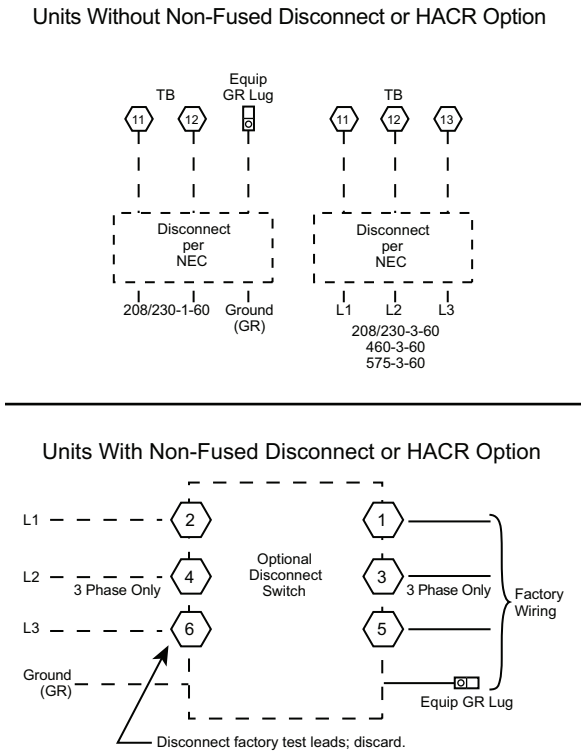

Fig. 26 — Power Wiring Connections

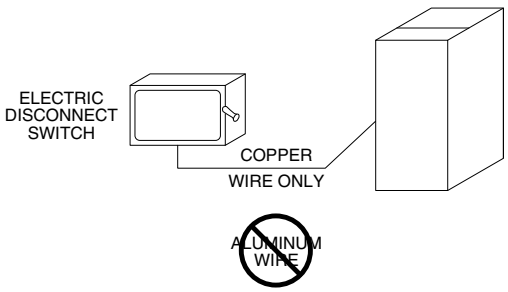

Fig. 27 — Disconnect Switch and Unit

UNITS WITH FACTORY-INSTALLED NON-FUSED DISCONNECT OR HACR

The factory-installed option non-fused disconnect (NFD) or HACR switch is located in a weatherproof enclosure located under the main control box. The manual switch handle and shaft are shipped in the disconnect or HACR enclosure. Assemble the shaft and handle to the switch at this point. Discard the factory test leads (see Fig. 26).

NOTE: Non-fused disconnect and HACR are not available on 460V units.

Connect field power supply conductors to LINE side terminals when the switch enclosure cover is removed to attach the handle.

Field-Install the NFD Shaft and Handle

1. Remove the Control Box access panel. The NFD enclosure is located below the Control Box (see Fig. 28).
2. Remove (3) cap head screws that secure the NFD enclosure front cover — (2) on the face of the cover and (1) on the left side cover. See Fig. 29.
3. Remove the front cover of the NFD enclosure.
4. Make sure the NFD shipped from the factory is at OFF position (the arrow on the black handle knob is at OFF).
5. Insert the shaft with the cross pin on the top of the shaft in the horizontal position. See Fig. 29.
6. Measure from the tip of the shaft to the top surface of the black pointer; the measurement should be 3.75 to 3.88 in. (95 to 99 mm).
7. Tighten the locking screw to secure the shaft to the NFD.
8. Turn the handle to the OFF position with red arrow pointing at OFF.
9. Install the handle on to the painted cover horizontally with the red arrow pointing to the left.
10. Secure the handle to the painted cover with (2) screws and lock washers supplied.
11. Engaging the shaft into the handle socket, re-install (3) hex screws on the NFD enclosure.
12. Re-install the unit front panel.

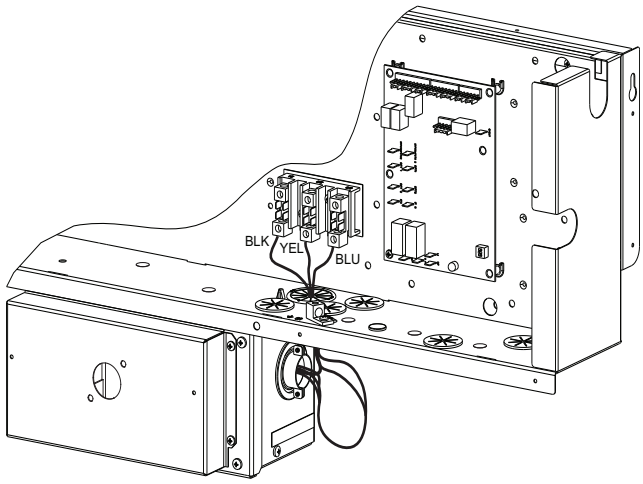

Fig. 28 — NFD Enclosure Location

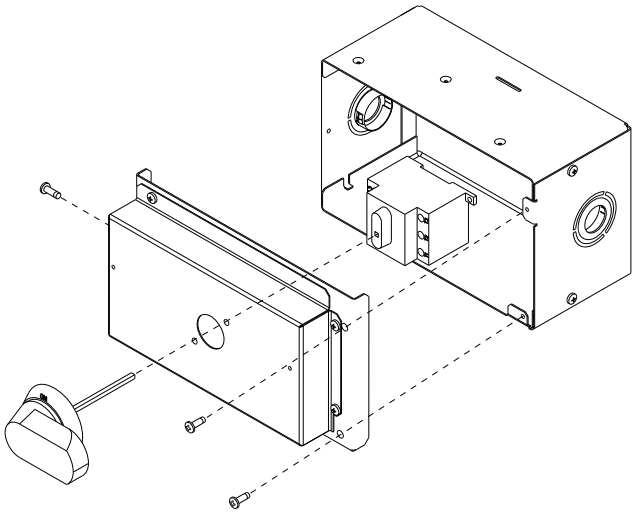

Fig. 29 — NFD Handle and Shaft Assembly

NOTE: Non-fused disconnect (NFD) is not available on 460V units.

Field-Install the HACR Shaft and Handle

1. Remove the Control Box access panel. The HACR enclosure is located below the Control Box (see Fig. 30).
2. Remove (3) cap head screws that secure the HACR enclosure — (2) on the face of the cover and (1) on the left side cover. See Fig. 31.
3. Remove the front cover of the HACR enclosure.
4. Make sure the HACR shipped from the factory is at OFF position (the white arrow pointing at OFF).
5. Insert the shaft all the way with the cross pin on the top of the shaft in the horizontal position. See Fig. 31.
6. Tighten the locking screw to secure the shaft to the HACR.
7. Turn the handle to the OFF position with red arrow pointing at OFF.
8. Install the handle on to the painted cover horizontally with the red arrow pointing to the left.
9. Secure the handle to the painted cover with (2) screws and lock washers supplied.
10. Engaging the shaft into the handle socket, re-install (3) hex screws on the HACR enclosure.
11. Re-install the unit front panel.

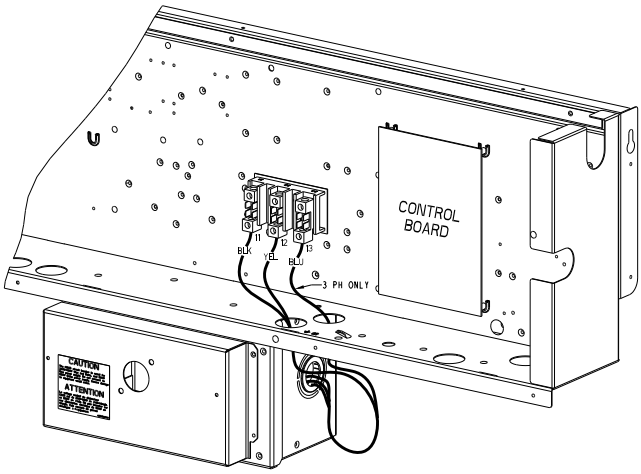

Fig. 30 — HACR Enclosure Location

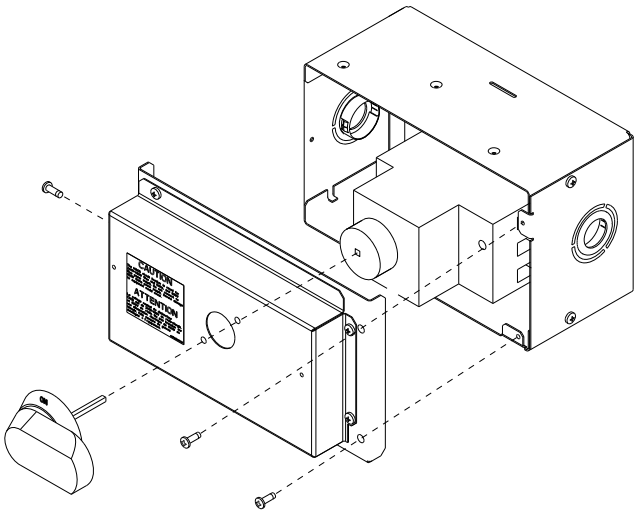

Fig. 31 — HACR Handle and Shaft Assembly

NOTE: HACR breaker is not available on 460V units.

UNITS WITHOUT FACTORY-INSTALLED NON-FUSED DISCONNECT OR HACR

When installing units, provide a disconnect switch per NEC (National Electrical Code) of adequate size. Disconnect sizing data is provided on the unit informative plate. Locate on unit cabinet or within sight of the unit per national or local codes. Do not cover unit informative plate if mounting the disconnect on the unit cabinet.

ALL UNITS

All field wiring must comply with NEC and all local codes. Size wire based on MCA (Minimum Circuit Amps) on the unit informative plate. See Fig. 26 and the unit label diagram for power wiring connections to the unit power terminal blocks and equipment ground. Maximum wire size is #2ga AWG (copper only) per pole on contactors. See Fig. 26 and unit label diagram for field power wiring connections.

Provide a ground fault and short circuit over-current protection device (fuse or breaker) per NEC Article 440 (or local codes). Refer to unit informative data plate for MOCP (Maximum Over-Current Protection) device size.

NOTE: Units ordered with factory installed HACR do not need an additional ground fault and short circuit over-current protective device unless required by local codes.

All field wiring must comply with the NEC and local requirements.

All units except 208/230v units are factory wired for the voltage shown on the nameplate. *If the 208/230v unit is to be connected to a 208v power supply, the control transformer must be rewired by moving the black wire with the 1/4-in. female spade connector from the 230v connection and moving it to the 200v 1/4-in. male terminal on the primary side of the transformer. Refer to unit label diagram for additional information. Field power wires will be connected at line-side pressure lugs on the power terminal block or at factory-installed option non-fused disconnect.*

NOTE: Check all factory and field electrical connections for tightness.

CONVENIENCE OUTLETS

⚠ WARNING

ELECTRICAL OPERATION HAZARD

Failure to follow this warning could result in personal injury or death.

Units with convenience outlet circuits may use multiple disconnects. Check convenience outlet for power status before opening unit for service. Locate its disconnect switch, if appropriate, and open it. Lock-out and tag-out this switch, if necessary.

Two types of convenience outlets are offered on 48GCG models: non-powered and unit-powered. Both types provide a 125-v GFCI (ground-fault circuit interrupter) duplex receptacle rated at 15A behind a hinged waterproof access cover, located on the end panel of the unit. See Fig. 32.

Figure 33 shows the Convenience Outlet Utilization label which is located below the convenience outlet.

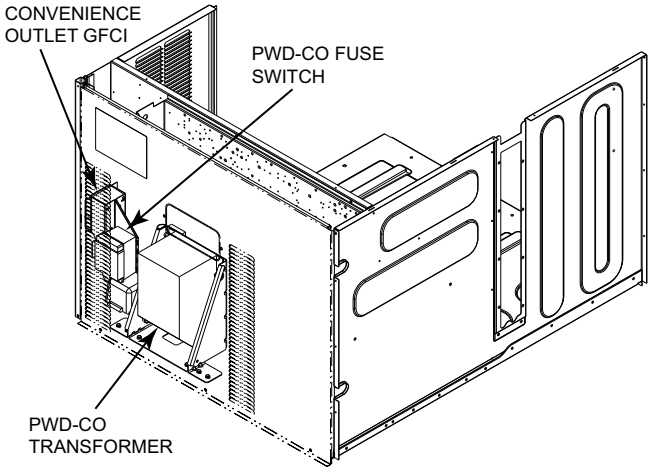

Fig. 32 — Convenience Outlet Location

NOTICE

Convenience Outlet Utilization

Maximum Continuous use: 15 Amps for receptacle outlets, and 8 Amps for factory supplied transformers

50HJ542739 | C

Fig. 33 — Convenience Outlet Utilization Notice Label

Installing Weatherproof Cover

A weatherproof while-in-use cover for the factory-installed convenience outlets is now required by UL standards. This cover cannot be factory-mounted due its depth; it must be installed at unit installation. For shipment, the convenience outlet is covered with a blank cover plate.

On units with electro-mechanical controls the weatherproof cover kit is shipped in the unit's control box. The kit includes the hinged cover, a backing plate, and gasket. On units with a factory installed direct digital controller (SystemVu™ or RTU Open) the weatherproof cover kit is secured to the basepan underneath the control box (see Fig. 34).

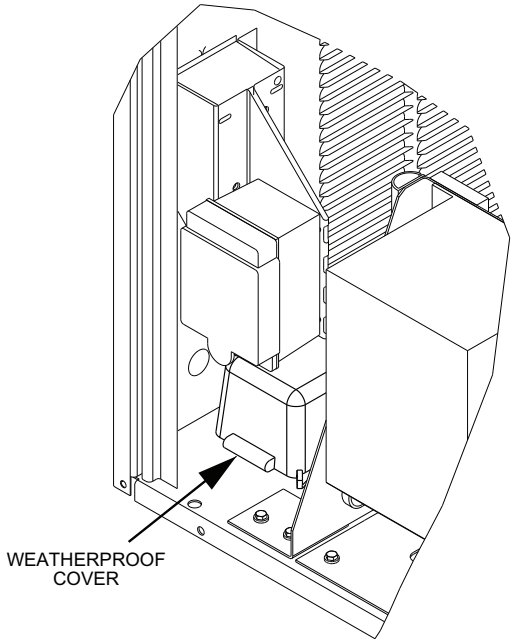

Fig. 34 — Weatherproof Cover — Shipping Location on Units with Factory-Installed DDC

⚠ WARNING

ELECTRICAL OPERATION HAZARD

Failure to follow this warning could result in personal injury or death.

Using unit-mounted convenience outlets: Units with unit-mounted convenience outlet circuits will often require that two disconnects be opened to de-energize all power to the unit. Treat all units as electrically energized until the convenience outlet power is also checked and de-energization is confirmed. Observe National Electrical Code Article 210, Branch Circuits, for use of convenience outlets.

1. Remove the blank cover plate at the convenience outlet; discard the blank cover.
2. Loosen the two screws at the GFCI duplex outlet, until approximately 1/2-in. (13 mm) under screw heads is exposed. Press the gasket over the screw heads.
3. Slip the backing plate over the screw heads at the keyhole slots and align with the gasket; tighten the two screws until snug (do not over-tighten).
4. Mount the weatherproof cover to the backing plate as shown in Fig. 35.
5. Remove two slot fillers in the bottom of the cover to permit service tool cords to exit the cover.
6. Check for full closing and latching.

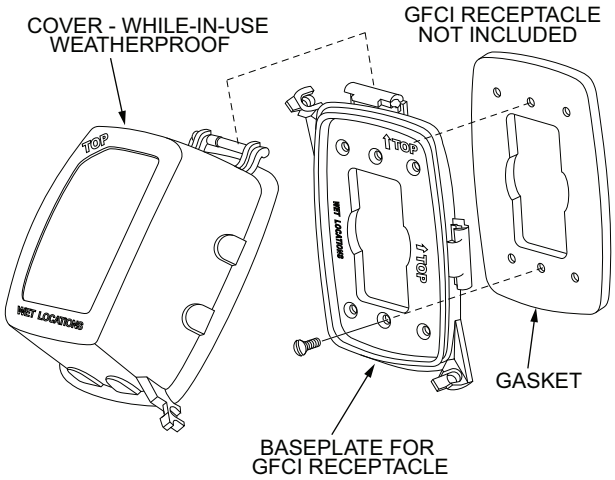

Fig. 35 — Weatherproof Cover Installation

Non-Powered Convenience Outlet

This type requires the field installation of a general-purpose 125-v 15A circuit powered from a source elsewhere in the building. Observe national and local codes when selecting wire size, fuse or breaker requirements, and disconnect switch size and location. Route 125-v power supply conductors into the bottom of the utility box containing the duplex receptacle.

Unit-Powered Convenience Outlet

A unit-mounted transformer is factory-installed to step down the main power supply voltage to the unit to 115-v at the duplex receptacle. This option also includes a manual switch with fuse, located in a utility box and mounted on a bracket behind the convenience outlet; access is through the unit's control box access panel. See Fig. 32.

The primary leads to the convenience outlet transformer are not factory-connected. Selection of primary power source is a customer option. If local codes permit, the transformer primary leads can be connected at the line-side terminals on the unit-mounted non-fused disconnect or HACR breaker switch; this will provide service power to the unit when the unit disconnect switch or HACR switch is open. Other connection methods will result in the convenience outlet circuit being de-energized when the unit disconnect or HACR switch is open. See Fig. 36.

Using Unit-Mounted Convenience Outlets

Units with unit-mounted convenience outlet circuits will often require that two disconnects be opened to de-energize all power to the unit. Treat all units as electrically energized until the convenience outlet power is also checked and de-energization is confirmed. Observe National Electrical Code Article 210, Branch Circuits, for use of convenience outlets.

Fuse On Power Type

The factory fuse is a Bussman[1] "Fusetron" T-15, non-renewable screw-in (Edison base) type plug fuse.

Test the GFCI receptacle by pressing the TEST button on the face of the receptacle to trip and open the receptacle. Check for proper grounding wires and power line phasing if the GFCI receptacle does not trip as required. Press the RESET button to clear the tripped condition.

1. Bussman and Fusetron are trademarks of Cooper Technologies Company.

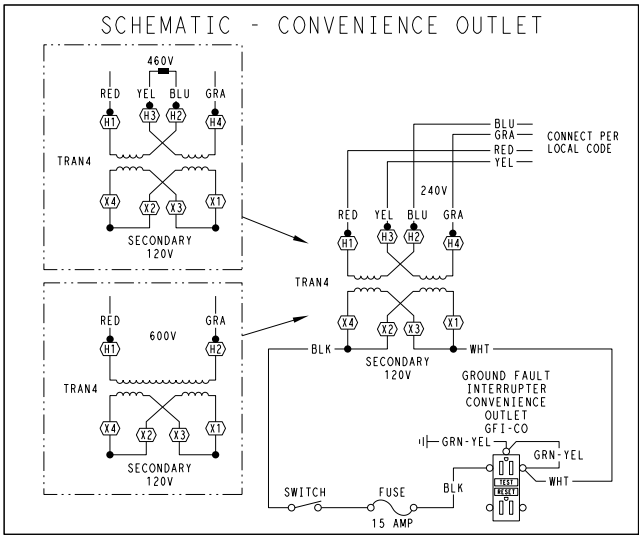

UNIT VOLTAGE	CONNECT AS	PRIMARY CONNECTIONS	TRANSFORMER TERMINALS
208, 230	240	L1: RED + YEL L2: BLU + GRA	H1 + H3 H2 + H4
460	480	L1: RED Splice BLU + YEL L2: GRA	H1 H2 + H3 H4
575	600	L1: RED L2: GRA	H1 H2

Fig. 36 — Powered Convenience Outlet Wiring

HACR AMP RATING

The amp rating of the HACR factory-installed option is based on the size, voltage, indoor motor and other electrical options of the unit as shipped from the factory. If field-installed accessories are added or changed in the field (for example, power exhaust, ERV), the HACR may no longer be of the proper amp rating and therefore will need to be removed from the unit. See unit nameplate and label on factory-installed HACR for the amp rating of the HACR that was shipped with the unit from the factory (Fig. 37). See unit nameplates for the proper fuse, HACR or maximum over-current protection device required on the unit with field-installed accessories.

⚠ CAUTION

The HACR circuit breaker is rated for 240V/480V Wye and Delta, and 600V Wye power supply. Do not connect to 600V Delta power supply. Severe damage to equipment would occur.

⚠ ATTENTION

Le voltage nominal du disjoncteur CACR est de 240V/480V en étoile-triangle, et 600V en étoile. Ne pas brancher sur une alimentation électrique de 600V en triangle. Cela causera de graves dommages à l'équipment.

48TM503700 -

Fig. 37 — HACR Caution Label

FACTORY-OPTION THRU-BASE CONNECTIONS (ELECTRICAL CONNECTIONS)

This service connection kit consists of a 1/2-in. NPT gas adapter fitting (brass), a 1/2-in. electrical bulkhead connector, and a 3/4-in. electrical bulkhead connector, all factory-installed in the embossed (raised) section of the unit basepan in the condenser section. The 3/4-in. bulkhead connector enables the low-voltage control wires to pass through the basepan. The 1/2-in. electrical bulkhead connector allows the high-voltage power wires to pass through the basepan. See Fig. 18 on page 14.

Check tightness of connector lock nuts before connecting electrical conduits.

Field-supplied and field-installed liquid tight conduit connectors and conduit may be attached to the connectors on the basepan. Pull correctly rated high voltage and low voltage through appropriate conduits. Connect the power conduit to the internal disconnect (if unit is so equipped) or to the external disconnect (through unit side panel). A hole must be field cut in the main control box bottom on the left side so the 24-v control connections can be made. Connect the control power conduit to the unit control box at this hole.

UNITS WITHOUT THRU-BASE CONNECTIONS (ELECTRICAL CONNECTIONS)

1. Install power wiring conduit through side panel openings. Install conduit between disconnect and control box.
2. Install power lines to terminal connections as shown in Fig. 26 on page 17.

Voltage to compressor terminals during operation must be within voltage range indicated on unit nameplate. On 3-phase units, voltages between phases must be balanced within 2% and the current within 10%. Use the following formula to determine the percent of voltage imbalance. Operation on improper line voltage or excessive phase imbalance constitutes abuse and may cause damage to electrical components. Such operation would invalidate any applicable Carrier warranty.

$$\text{\% Voltage Imbalance} = 100 \times \frac{\text{max voltage deviation from average voltage}}{\text{average voltage}}$$

Example: Supply voltage is 230-3-60

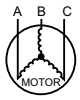

AB = 224 v
BC = 231 v
AC = 226 v

$$\text{Average Voltage} = \frac{(224 + 231 + 226)}{3} = \frac{681}{3} = 227$$

Determine maximum deviation from average voltage.
(AB) 227-224 = 3 v
(BC) 231-227 = 4 v
(AC) 227-226 = 1 v
Maximum deviation is 4 v.
Determine percent of voltage imbalance.

$$\text{\% Voltage Imbalance} = 100\text{x} \frac{4}{227} = 1.78\%$$

This amount of phase imbalance is satisfactory as it is below the maximum allowable 2%.

IMPORTANT: If the supply voltage phase imbalance is more than 2%, contact your local electric utility company immediately.

FIELD CONTROL WIRING

The 48GC unit requires an external temperature control device. This device can be a thermostat (field-supplied) or a SystemVu™ controller (available as factory-installed option for use on a Carrier Comfort Network® or as a stand alone control) or the RTU Open Controller for Building Management Systems using non-CCN protocols (RTU Open is available as a factory-installed option only).

THERMOSTAT

Install a Carrier-approved accessory thermostat according to installation instructions included with the accessory. For complete economizer function, select a two-stage cooling thermostat. Locate the thermostat accessory on a solid wall in the conditioned space to sense average temperature in accordance with the thermostat installation instructions. Typical low-voltage connections are shown in Fig. 38.

If the thermostat contains a logic circuit requiring 24-v power, use a thermostat cable or equivalent single leads of different colors with minimum of seven leads. If the thermostat does not require a 24-v source (no "C" connection required), use a thermostat cable or equivalent with minimum of six leads. Check the thermostat installation instructions for additional features which might require additional conductors in the cable.

For wire runs up to 50 ft (15 m), use no. 18 AWG (American Wire Gage) insulated wire [95°F (35°C) minimum]. For 50 to 75 ft (15 to 23 m), use no. 16 AWG insulated wire [95°F (35°C) minimum]. For over 75 ft (23 m), use no. 14 AWG insulated wire [95°F (35°C) minimum]. Wire sizes larger than no. 18 AWG cannot be directly connected to the thermostat and will require a junction box and splice at the thermostat.

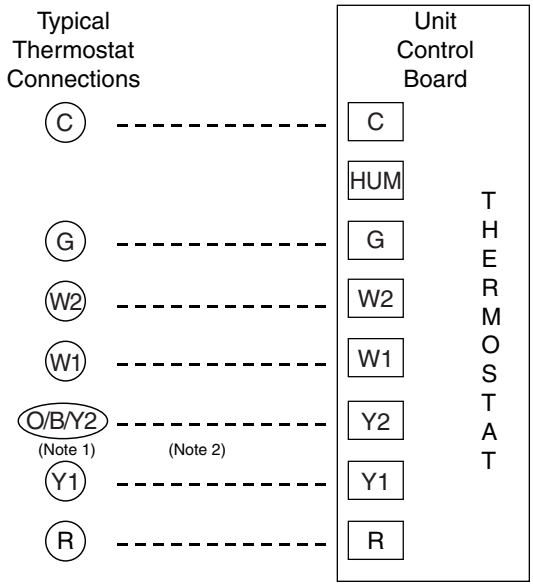

Note 1: Typical multi-function marking. Follow manufacturer's configuration Instructions to select Y2.

Note 2: Y2 to Y2 connection required on single-stage cooling units when integrated economizer function is desired.

- - - Field Wiring

Fig. 38 — Low-Voltage Thermostat Connections

Thermostat Wiring, Units Without Thru-Base Connection Kit

Pass the thermostat control wires through the hole provided in the corner post; then feed the wires through the raceway built into the corner post to the control box. Pull the wires over to the terminal strip on the upper-left corner of the Unit Control Board. See Fig. 39.

NOTE: If thru-the-bottom connections accessory is used, refer to the accessory installation instructions for information on routing power and control wiring.

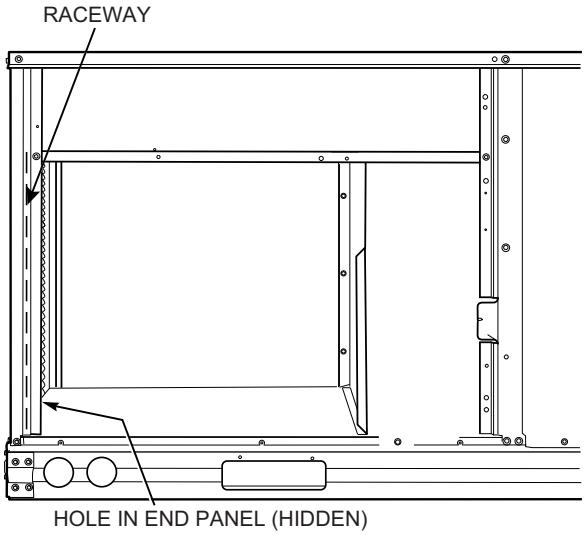

Fig. 39 — Field Control Wiring Raceway

HEAT ANTICIPATOR SETTINGS

Set heat anticipator settings at 0.14 amp for the first stage and 0.14 amp for second-stage heating, when available.

HUMIDI-MIZER® CONTROL CONNECTIONS

Humidi-MiZer® Space RH Controller

NOTE: The Humidi-MiZer system is a factory-installed option. Humidi-MiZer system is not available for single phase (-3 voltage code) models.

The Humidi-MiZer dehumidification system requires a field-supplied and field-installed space relative humidity control device. This device may be a separate humidistat control (contact closes on rise in space RH above control setpoint) or a combination thermostat-humidistat control device such as Carrier's Edge® Pro Thermidistat™ device with isolated contact set for dehumidification control. See Fig. 40 and 41. The humidistat is normally used in applications where a temperature control is already provided (units with SystemVu™ control).

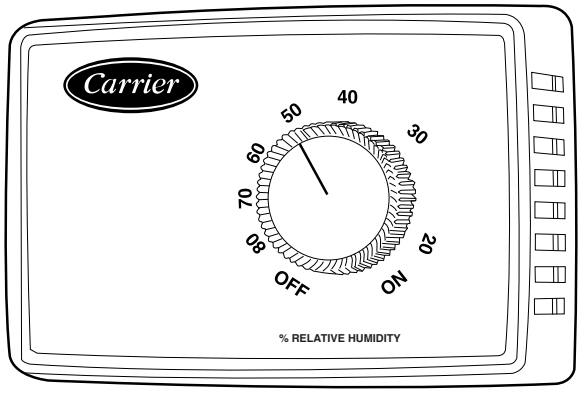

Fig. 40 — Accessory Field-Installed Humidistat

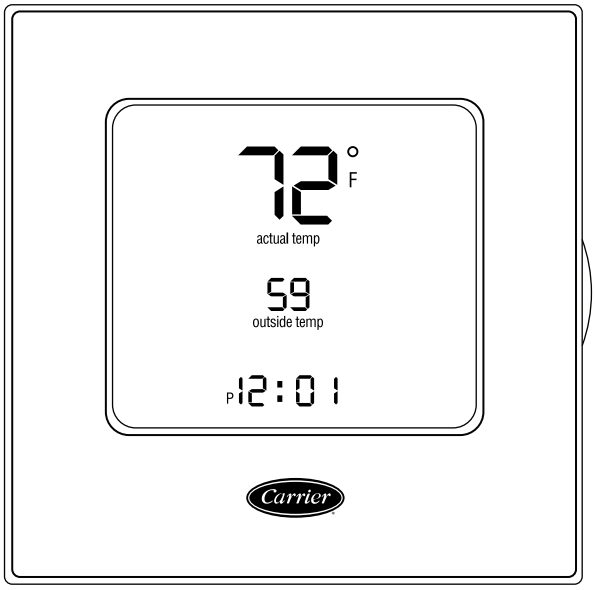

Fig. 41 — Edge® Pro Thermidistat

Connecting the Carrier Humidistat (HL38MG029)

1. Route the humidistat 2-conductor cable (field-supplied) through the hole provided in the unit corner post.
2. Feed wires through the raceway built into the corner post (see Fig. 39) to the 24-v barrier located on the left side of the control box. The raceway provides the UL-required clearance between high-voltage and low-voltage wiring.
3. Connect one of the leads from the 2-conductor cable to the HUM terminal on the UCB (Unit Control Board). Connect the other lead to the R terminal on the UCB. See Fig. 42.

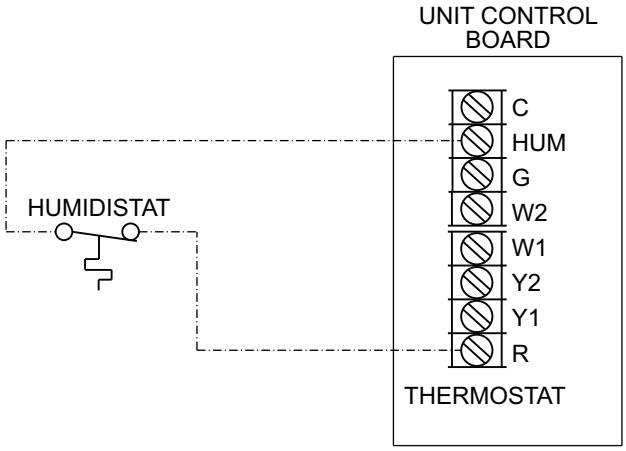

Fig. 42 — Humidistat Connections to UCB

Connecting the Thermidistat device (33CS2PPRH-01)

1. Route the Thermidistat multi-conductor thermostat cable (field-supplied) through the hole provided in the unit corner post.
2. Feed wires through the raceway built into the corner post (see Fig. 39) to the 24-v barrier located on the left side of the control box. The raceway provides the UL-required clearance between high-voltage and low-voltage wiring.
3. The Thermidistat has dry contacts at terminals D1 and D2 for dehumidification operation (see Fig. 43). Connect D1 to the R terminal on the UCB. Connect D2 to the HUM terminal on the UCB. Refer to the installation instructions included with the Carrier Edge® Pro Thermidistat device for more information.

TYPICAL UNIT WIRING DIAGRAMS

See Fig. 44-48 for examples of typical unit control and power wiring diagrams. These wiring diagrams are mounted on the inside of the unit control box cover.

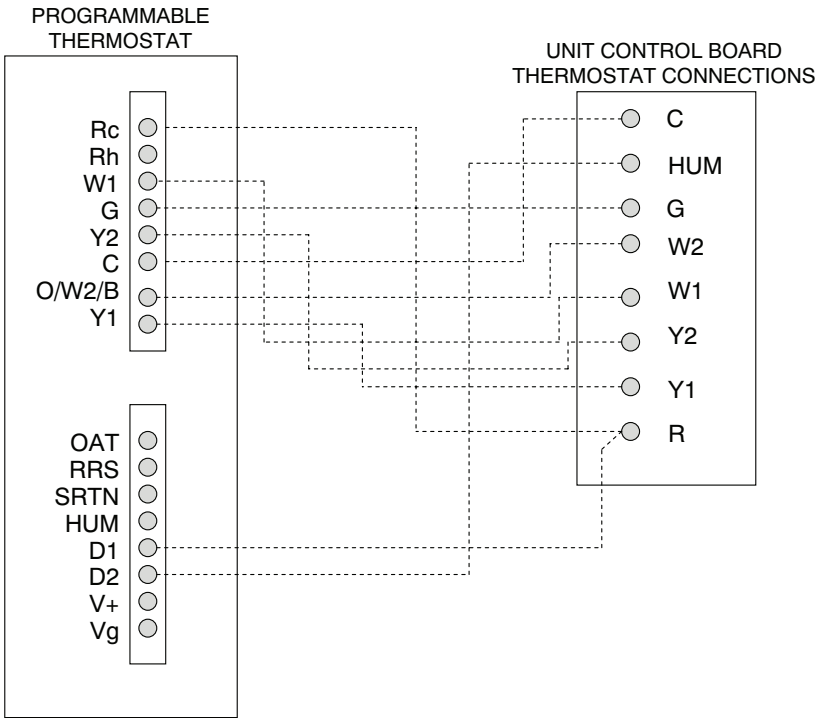

Fig. 43 — Typical Rooftop Unit with Humidi-MiZer® Adaptive Dehumidification System and Edge® Pro Thermidistat Device

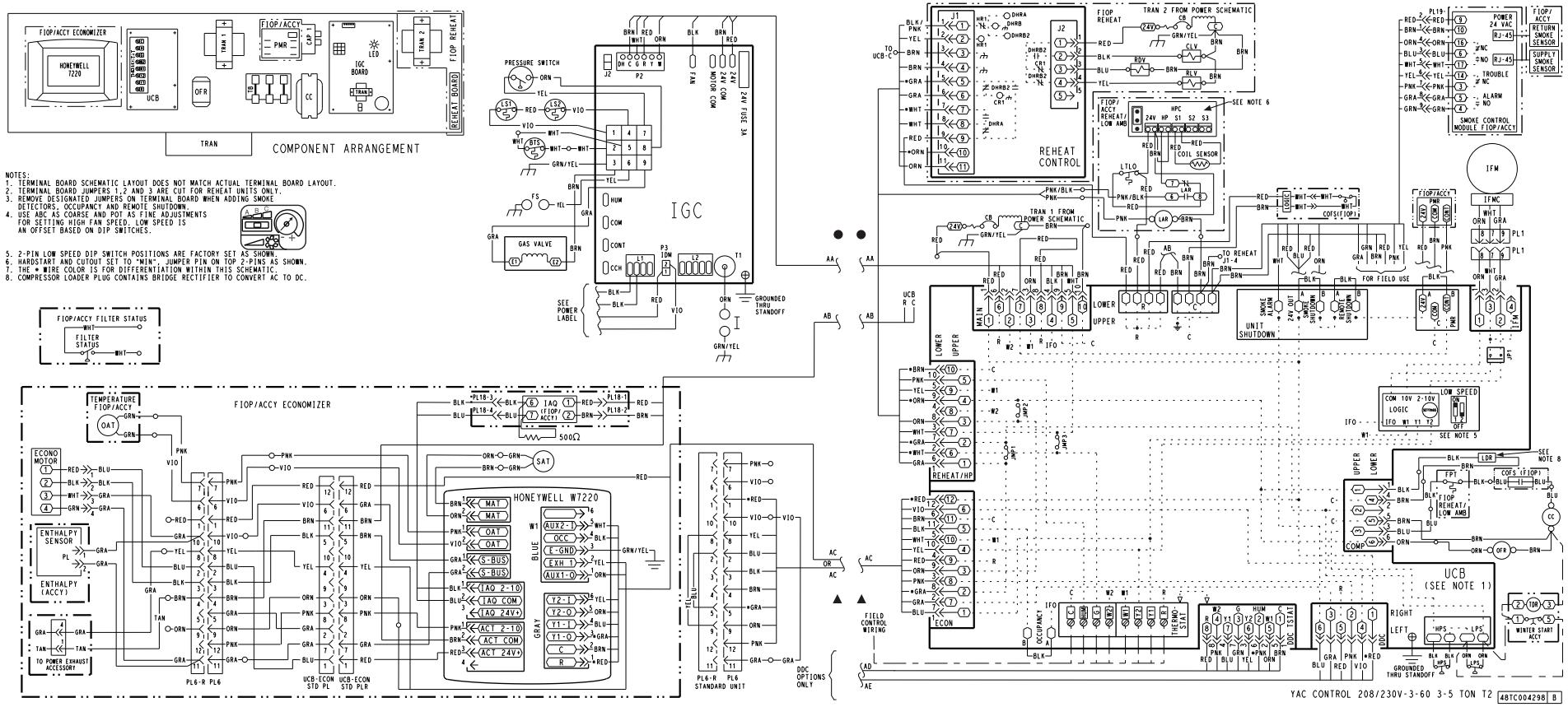

Fig. 44 — Typical Control Wiring Diagram, Electro-Mechanical with W7220 (48GCG 04-06 208/230-3-60 Unit Shown)

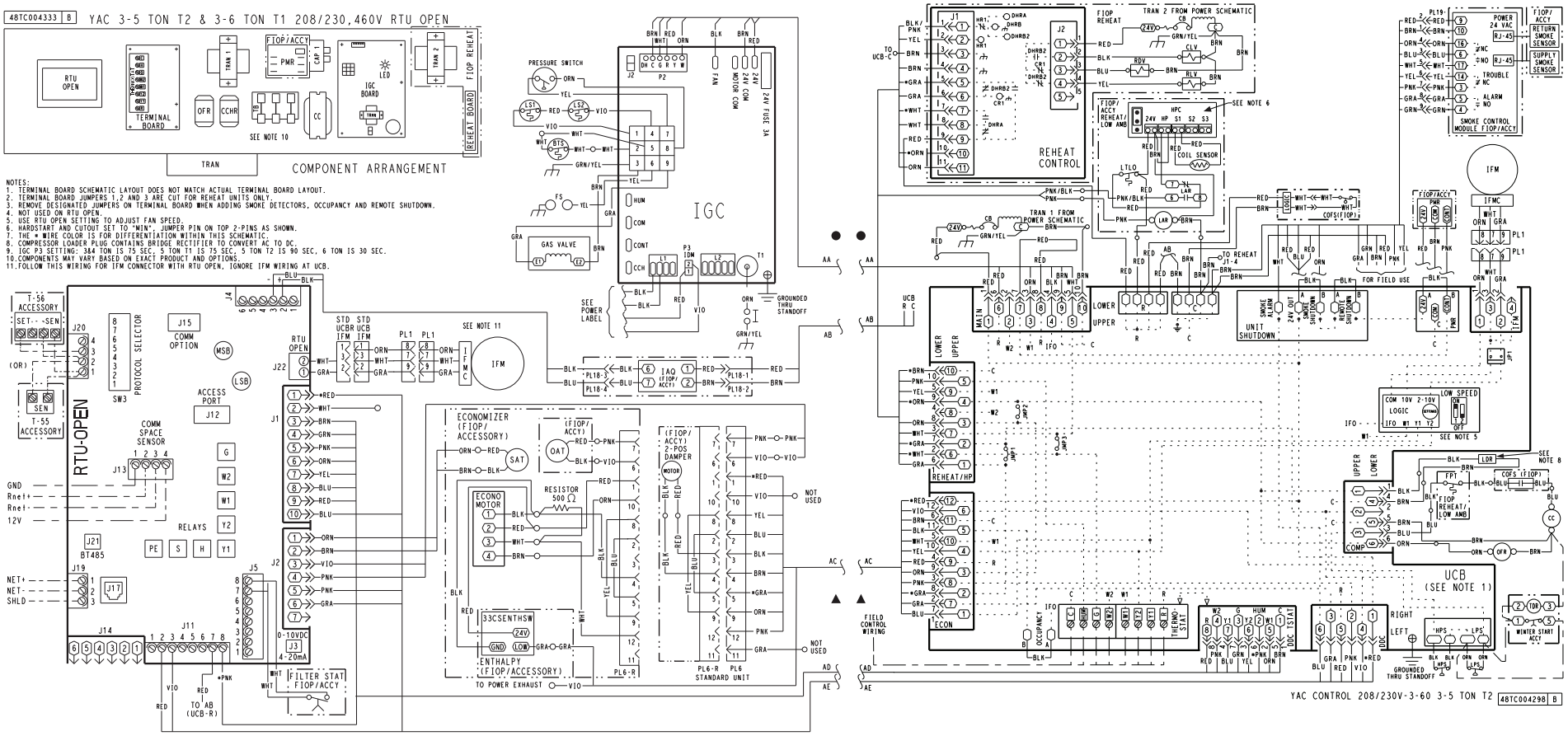

Fig. 45 — Typical Control Wiring Diagram, RTU Open Controller (48GCG 04-06 208/230-3-60 Unit Shown)

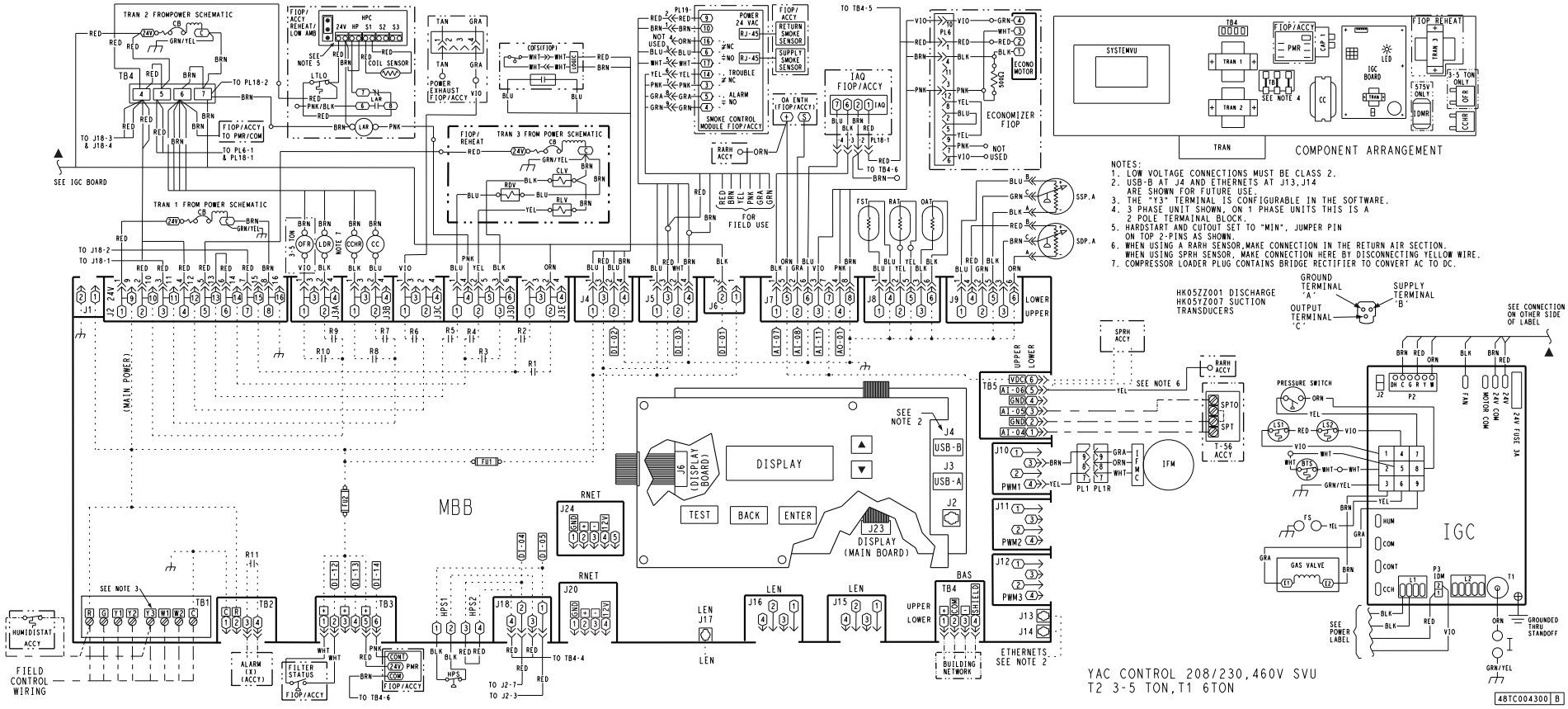

Fig. 46 — Typical Control Wiring Diagram, SystemVu Controller (48GCG 04-06 208/230, 460V Unit Shown)

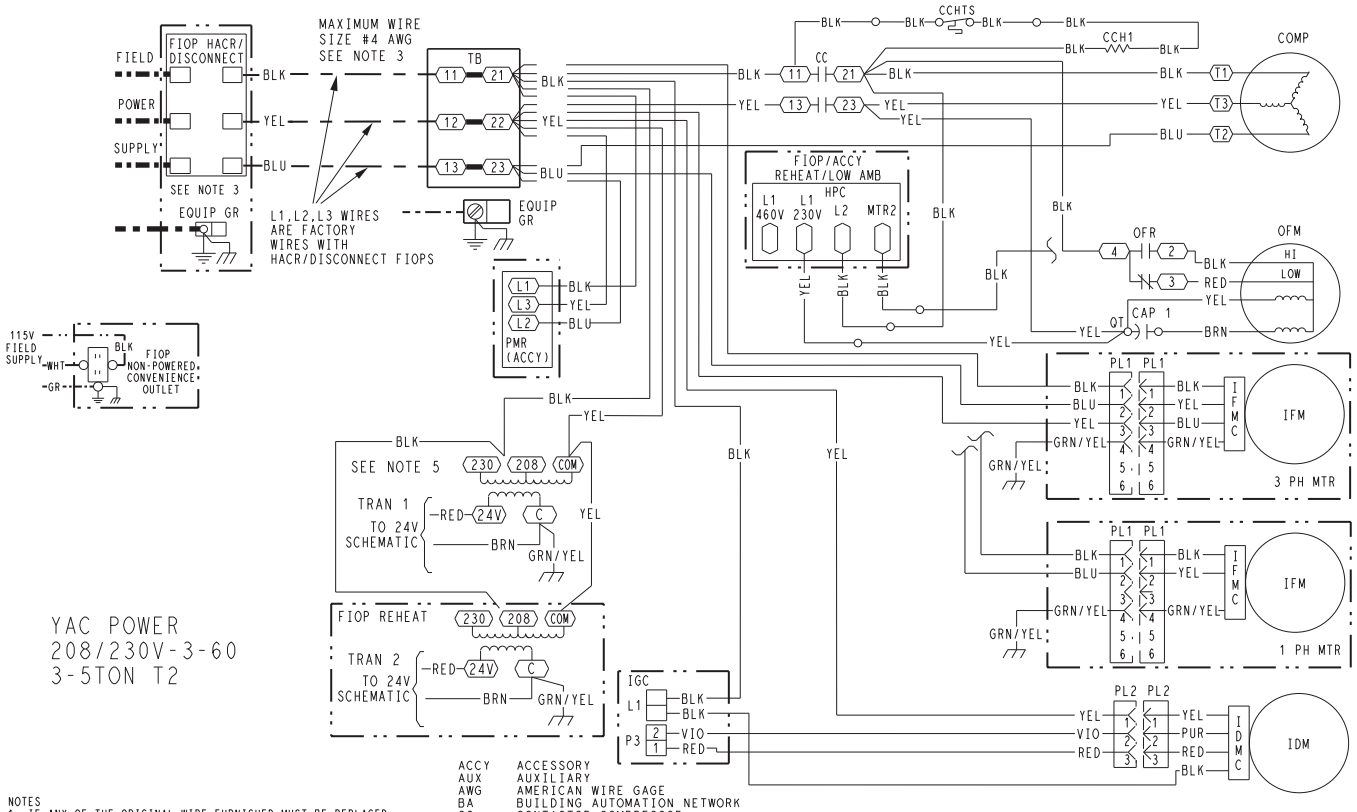

NOTES
1. IF ANY OF THE ORIGINAL WIRE FURNISHED MUST BE REPLACED. IT MUST BE REPLACED WITH TYPE 90° C WIRE OR ITS EQUIVALENT.
2. COMPRESSOR AND FAN MOTORS ARE THERMALLY PROTECTED.
3. USE COPPER CONDUCTOR ONLY.
4. DO NOT DISCONNECT POWER PLUG OR SIGNAL WIRE WHILE UNDER LOAD.
5. ON 208/230V UNITS, TRAN IS WIRED FOR 230V. IF UNIT IS TO BE RUN WITH 208V POWER SUPPLY, DISCONNECT BLK WIRE FROM 230V TAP AND CONNECT TO 208V TAP.

LEGEND

- (X) MARKED WIRE
- (X) TERMINAL (MARKED)
- ○ TERMINAL (UNMARKED)
- [X] TERMINAL BLOCK
- ● SPLICE
- (●) SPLICE (MARKED)
- FACTORY WIRING
- FIELD CONTROL WIRING
- FIELD POWER WIRING
- CIRCUIT BOARD TRACE
- ACCESSORY OR OPTIONAL WIRING

ACCY	ACCESSORY
AUX	AUXILIARY
AWG	AMERICAN WIRE GAGE
BA	BUILDING AUTOMATION NETWORK
CC	CONTACTOR,COMPRESSOR
C	COMMON
CAP	CAPACITOR
CB	CIRCUIT BREAKER
CCH	CRANKCASE HEATER
CCHR	CRANKCASE HEATER RELAY
CCHTS	CRANKCASE HEATER TEMP SWITCH
CLO	COMPRESSOR LOCKOUT
CLV	COOLING LIQUID VALVE
CMB	CENTRIFUGAL MOTOR BLOWER
COFS	CONDENSATE OVERFLOW SWITCH
COM	SIGNAL COMMON
COMP	COMPRESSOR MOTOR
DDC	DIRECT DIGITAL CONTROL
DFB	DEFROST BOARD
DFT	DEFROST THERMOSTAT
EHR	ELECTRIC HEAT RELAY
ENTH	ENTHALPY
EQUIP	EQUIPMENT
ERV	ENERGY RECOVERY VENTILATOR
ESL	ENTHALPY SENSOR - LOW
FB	FUSE BLOCK
FIOP	FACTORY INSTALLED OPTION
FPT	FREEZE PROTECTION THERMOSTAT
FS	FLAME SWITCH
FST	FAN HOUSING TEMP SENSOR
FU	FUSE
G	THERMOSTAT FAN CALL
GR(GND)	GROUND
GV	GAS VALVE
HACR	HEATING, AIR-CONDITIONING, REFRIGERATION BREAKER
HGRH	HOT GAS REHEAT
HPC	HEAD PRESSURE CONTROL
HPS	HIGH PRESSURE SWITCH
HR	HEATER RELAY
HUM	HUMIDISTAT
I	IGNITOR
IAQ	INDOOR AIR QUALITY SENSORS
IDM	INDUCED DRAFT MOTOR
IDMC	INDUCER DRAFT MOTOR CONTROLLER
IDMR	INDUCED DRAFT RELAY
IFM	INDOOR FAN MOTOR
IFMC	INDOOR FAN MOTOR CONTROL
IFO	INDOOR FAN ON SIGNAL
IGC	INTEGRATED GAS CONTROL
IRH	INDOOR RELATIVE HUMIDITY
JMP	JUMPER
L1	LINE 1
LA	LOW AMBIENT LOCKOUT
LAR	LOW AMBIENT RELAY
LAS	LOW AMBIENT SWITCH
LDR	COMPRESSOR LOADER
LEN	LOCAL EQUIPMENT NETWORK
LOC	LOSS OF CHARGE
LOOP PWR	CURRENT LOOP POWER
LPS	LOW PRESSURE SWITCH
LS	LIMIT SWITCH
LSM	LIMIT SWITCH (MANUAL RESET)
LTLO	LOW TEMP LOCKOUT
MBB	MAIN BASE BOARD
MOV	METAL OXIDE VARISTOR
MTR	MOTOR
OAQ	OUTDOOR AIR QUALITY
OAT	OUTDOOR AIR TEMP. SEN
OFM	OUTDOOR FAN MOTOR
OFR	OUTDOOR FAN RELAY
OL	OVERLOAD
PER	POWER EXHAUST RELAY
PH	PHASE
PL	PLUG ASSEMBLY
POT	POTENTIOMETER
PMR	PHASE MONITOR RELAY
PS	PRESSURE SWITCH
PWM	PULSE WIDTH MODULATION
QT	QUADRUPLE TERMINAL
R	THERMOSTAT POWER
RAT	RETURN AIR TEMP. SEN
RDV	REHEAT DISCHARGE VALVE
RH	RELATIVE HUMIDITY
RLV	REHEAT LIQUID VALVE
RNET	LOCAL ACCESS NETWORK
RS	ROLLOUT SWITCH
RVS	REVERSING VALVE SOLENOID
SAT	SUPPLY AIR TEMP SENSOR
SDP	SYSTEM DISCHARGE PRESSURE
SPRH	SPACE RELATIVE HUMIDITY
SPT	SPACE TEMPERATURE SENSOR
SPTO	SPACE TEMPERATURE OFFSET
SSP	SYSTEM SUCTION PRESSURE
STD	STANDARD
SW	SWITCH
TB	TERMINAL BLOCK
TDR	TIME DELAY RELAY
TRAN	TRANSFORMER
UCB	UNIT CONTROL BOARD
W1	1st STAGE OF HEATING CALL
W2	2nd STAGE OF HEATING CALL
Y1	1st STAGE OF COOLING CALL
Y2	2nd STAGE OF COOLING CALL

48TC004302 B

Fig. 47 — Typical Power Wiring Diagram – 48GCG 04-06 with Electro-Mechanical Controller, 208/230-3-60 Unit Shown

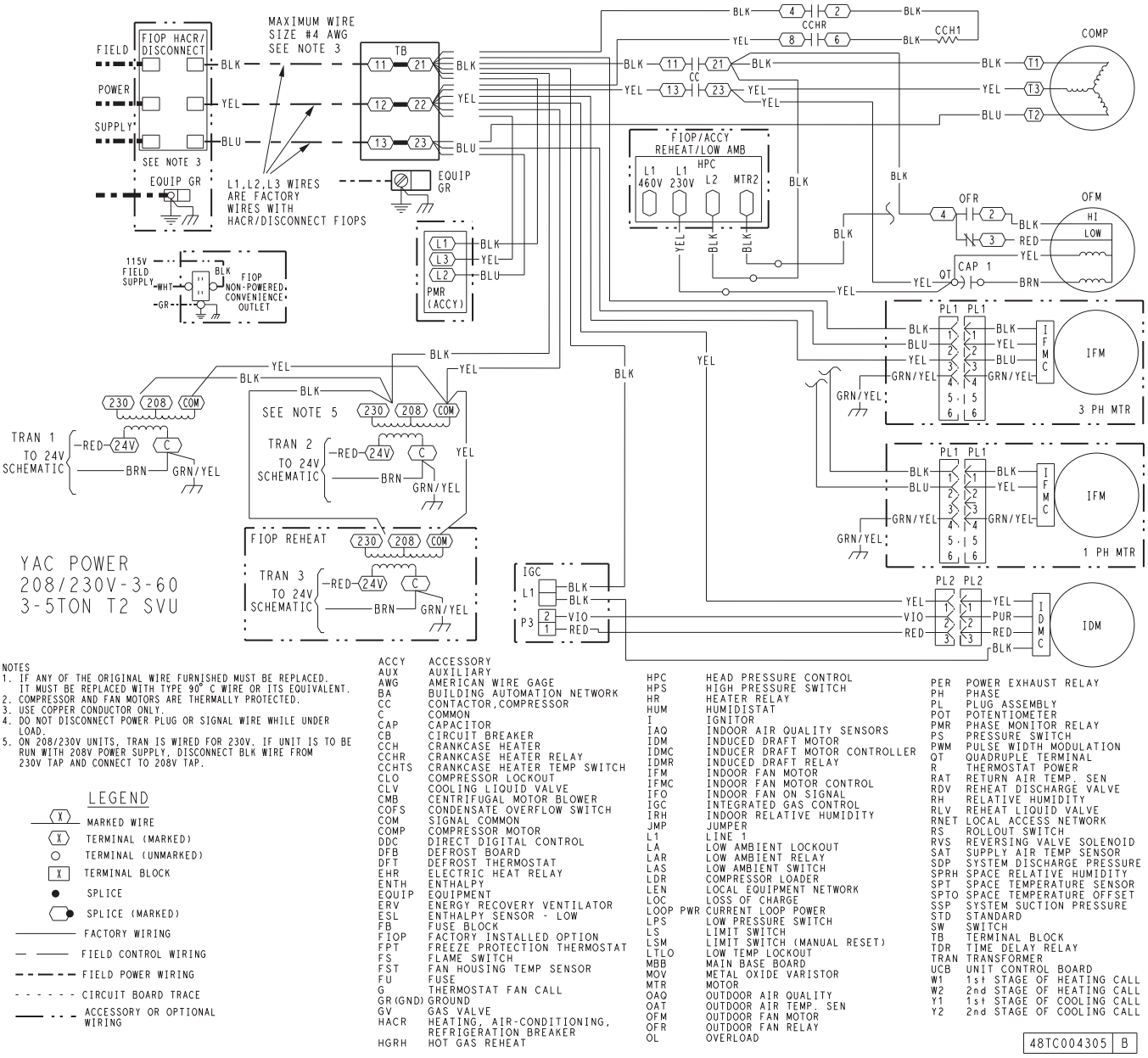

NOTES
1. IF ANY OF THE ORIGINAL WIRE FURNISHED MUST BE REPLACED, IT MUST BE REPLACED WITH TYPE 90° C WIRE OR ITS EQUIVALENT.
2. COMPRESSOR AND FAN MOTORS ARE THERMALLY PROTECTED.
3. USE COPPER CONDUCTOR ONLY.
4. DO NOT DISCONNECT POWER PLUG OR SIGNAL WIRE WHILE UNDER LOAD.
5. ON 208/230V UNITS, TRAN IS WIRED FOR 230V. IF UNIT IS TO BE RUN WITH 208V POWER SUPPLY, DISCONNECT BLK WIRE FROM 230V TAP AND CONNECT TO 208V TAP.

LEGEND

- MARKED WIRE
- TERMINAL (MARKED)
- TERMINAL (UNMARKED)
- TERMINAL BLOCK
- SPLICE
- SPLICE (MARKED)
- FACTORY WIRING
- FIELD CONTROL WIRING
- FIELD POWER WIRING
- CIRCUIT BOARD TRACE
- ACCESSORY OR OPTIONAL WIRING

ACCY	ACCESSORY
AUX	AUXILIARY
AWG	AMERICAN WIRE GAGE
BA	BUILDING AUTOMATION NETWORK
CC	CONTACTOR,COMPRESSOR
C	COMMON
CAP	CAPACITOR
CB	CIRCUIT BREAKER
CCH	CRANKCASE HEATER
CCHR	CRANKCASE HEATER RELAY
CCHTS	CRANKCASE HEATER TEMP SWITCH
CLO	COMPRESSOR LOCKOUT
CLV	COOLING LIQUID VALVE
CMB	CENTRIFUGAL MOTOR BLOWER
COFS	CONDENSATE OVERFLOW SWITCH
COM	SIGNAL COMMON
COMP	COMPRESSOR MOTOR
DDC	DIRECT DIGITAL CONTROL
DFB	DEFROST BOARD
DFT	DEFROST THERMOSTAT
EHR	ELECTRIC HEAT RELAY
ENTH	ENTHALPY
EQUIP	EQUIPMENT
ERV	ENERGY RECOVERY VENTILATOR
ESL	ENTHALPY SENSOR - LOW
FB	FUSE BLOCK
FIOP	FACTORY INSTALLED OPTION
FPT	FREEZE PROTECTION THERMOSTAT
FS	FLAME SWITCH
FST	FAN HOUSING TEMP SENSOR
FU	FUSE
G	THERMOSTAT FAN CALL
GR(GND)	GROUND
GV	GAS VALVE
HACR	HEATING, AIR-CONDITIONING, REFRIGERATION BREAKER
HGRH	HOT GAS REHEAT
HPC	HEAD PRESSURE CONTROL
HPS	HIGH PRESSURE SWITCH
HR	HEATER RELAY
HUM	HUMIDISTAT
I	IGNITOR
IAQ	INDOOR AIR QUALITY SENSORS
IDM	INDUCED DRAFT MOTOR
IDMC	INDUCER DRAFT MOTOR CONTROLLER
IDMR	INDUCED DRAFT RELAY
IFM	INDOOR FAN MOTOR
IFMC	INDOOR FAN MOTOR CONTROL
IFO	INDOOR FAN ON SIGNAL
IGC	INTEGRATED GAS CONTROL
IRH	INDOOR RELATIVE HUMIDITY
JMP	JUMPER
L1	LINE 1
LA	LOW AMBIENT LOCKOUT
LAR	LOW AMBIENT RELAY
LAS	LOW AMBIENT SWITCH
LDR	COMPRESSOR LOADER
LEN	LOCAL EQUIPMENT NETWORK
LOC	LOSS OF CHARGE
LOOP PWR	CURRENT LOOP POWER
LPS	LOW PRESSURE SWITCH
LS	LIMIT SWITCH
LSM	LIMIT SWITCH (MANUAL RESET)
LTLO	LOW TEMP LOCKOUT
MBB	MAIN BASE BOARD
MOV	METAL OXIDE VARISTOR
MTR	MOTOR
OAQ	OUTDOOR AIR QUALITY
OAT	OUTDOOR AIR TEMP. SEN
OFM	OUTDOOR FAN MOTOR
OFR	OUTDOOR FAN RELAY
OL	OVERLOAD
PER	POWER EXHAUST RELAY
PH	PHASE
PL	PLUG ASSEMBLY
POT	POTENTIOMETER
PMR	PHASE MONITOR RELAY
PS	PRESSURE SWITCH
PWM	PULSE WIDTH MODULATION
QT	QUADRUPLE TERMINAL
R	THERMOSTAT POWER
RAT	RETURN AIR TEMP. SEN
RDV	REHEAT DISCHARGE VALVE
RH	RELATIVE HUMIDITY
RLV	REHEAT LIQUID VALVE
RNET	LOCAL ACCESS NETWORK
RS	ROLLOUT SWITCH
RVS	REVERSING VALVE SOLENOID
SAT	SUPPLY AIR TEMP SENSOR
SDP	SYSTEM DISCHARGE PRESSURE
SPRH	SPACE RELATIVE HUMIDITY
SPT	SPACE TEMPERATURE SENSOR
SPTO	SPACE TEMPERATURE OFFSET
SSP	SYSTEM SUCTION PRESSURE
STD	STANDARD
SW	SWITCH
TB	TERMINAL BLOCK
TDR	TIME DELAY RELAY
TRAN	TRANSFORMER
UCB	UNIT CONTROL BOARD
W1	1st STAGE OF HEATING CALL
W2	2nd STAGE OF HEATING CALL
Y1	1st STAGE OF COOLING CALL
Y2	2nd STAGE OF COOLING CALL

48TC004305 | B

Fig. 48 — Typical Power Wiring Diagram – 48GCG 04-06 with SystemVu™ Controller, 208/230-3-60 Unit Shown

Integrated Gas Controller

his unit contains an Integrated Gas Controller (IGC) board. The IGC control board uses a flue gas pressure switch that senses pressure drop in the heat exchanger due to the combustion inducer. See Fig. 49.

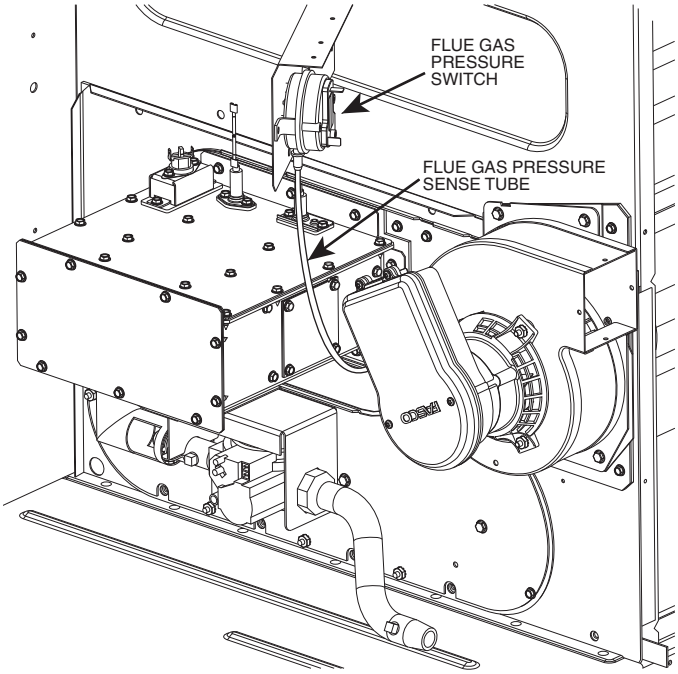

Fig. 49 — Flue Gas Pressure Switch and Pressure Sense Tube (Typical Location)

When the thermostat calls for heating, power is sent to W on the Integrated Gas Controller (IGC) board. An LED (light emitting diode) on the IGC board turns on and remains on during normal operation. A check is made to ensure that the burner thermal switch and limit switch are closed, and that the pressure switch is open. If the check was successful, the induced draft motor is energized. When the pressure in the heat exchanger is low enough to close the pressure switch, the ignition activation period begins. Once ignition occurs, the IGC board will continue to monitor the condition of the burner thermal switch, the limit switches, the pressure switch, and the flame sensor. Assuming the unit is controlled through a room thermostat set for "fan auto," 30 seconds after ignition occurs, the indoor fan motor will energize, and the outdoor air dampers will open to their minimum position. If the "over temperature limit" opens prior to the start of the indoor fan blower, the IGC will shut down the burners, and the control will shorten the 30 second delay to 5 seconds less than the time to trip the limit. For example, if the limit trips at 37 seconds, the control will change the "fan on delay" from 45 seconds to 32 seconds. Once the "fan on delay" has been modified, it will not change back to 30 seconds unless power is reset to the control.

When the thermostat is satisfied, W opens and the gas valve closes, interrupting the flow of gas to the main burners. If the call for W lasted less than 1 minute, the heating cycle will not terminate until 1 minute after W became active. If the unit is controlled through a room thermostat set for fan auto, the indoor fan motor will continue to operate for an additional 45 seconds, then stop. An LED indicator is provided on the IGC to monitor operation. See Table 5 for a listing of the LED alarm codes.

See Fig. 50 for IGC board component layout. Fig. 51 is a typical IGC control wiring diagram.

See Fig. 52 for a flow chart detailing the operating sequence for the IGC.

⚠ CAUTION

Do not detach the burner box from the heat exchanger panel. If the burner box must be replaced, refer to the Service and Maintenance Instructions for the unit.

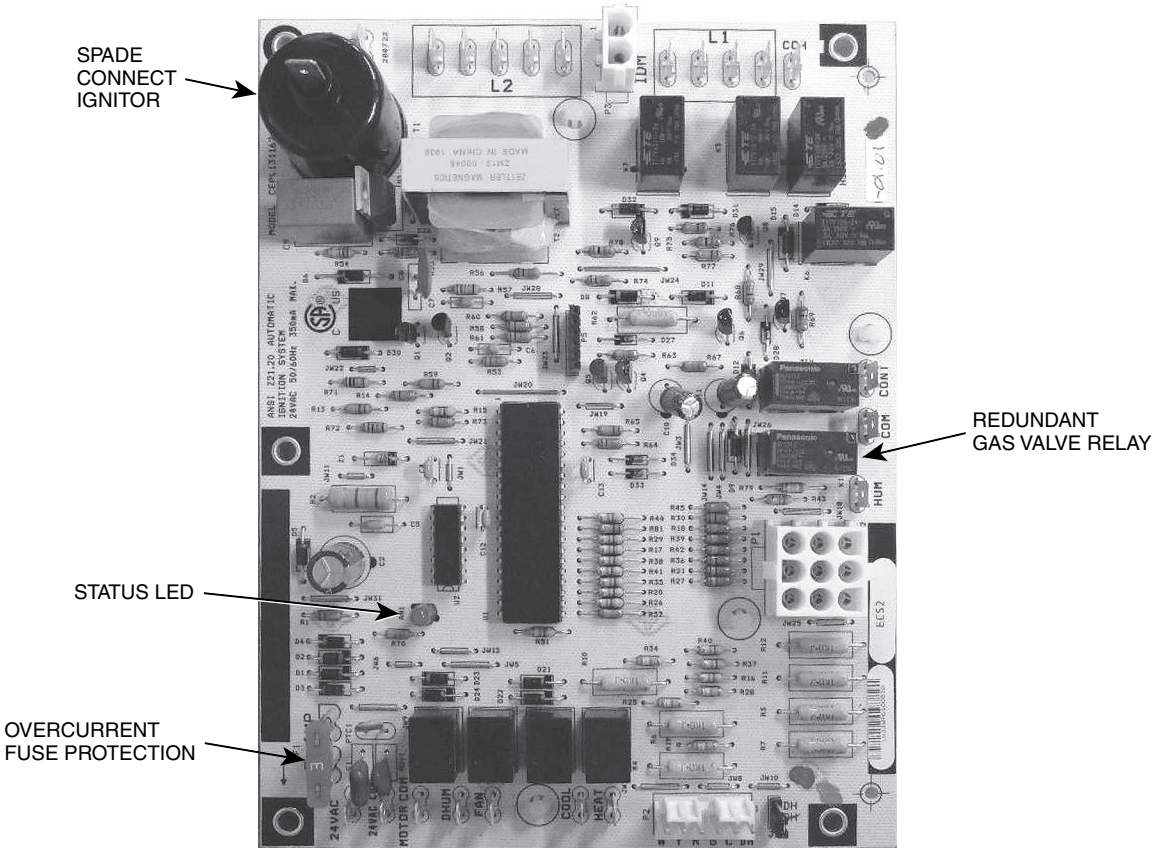

Fig. 50 — IGC Board Component Layout

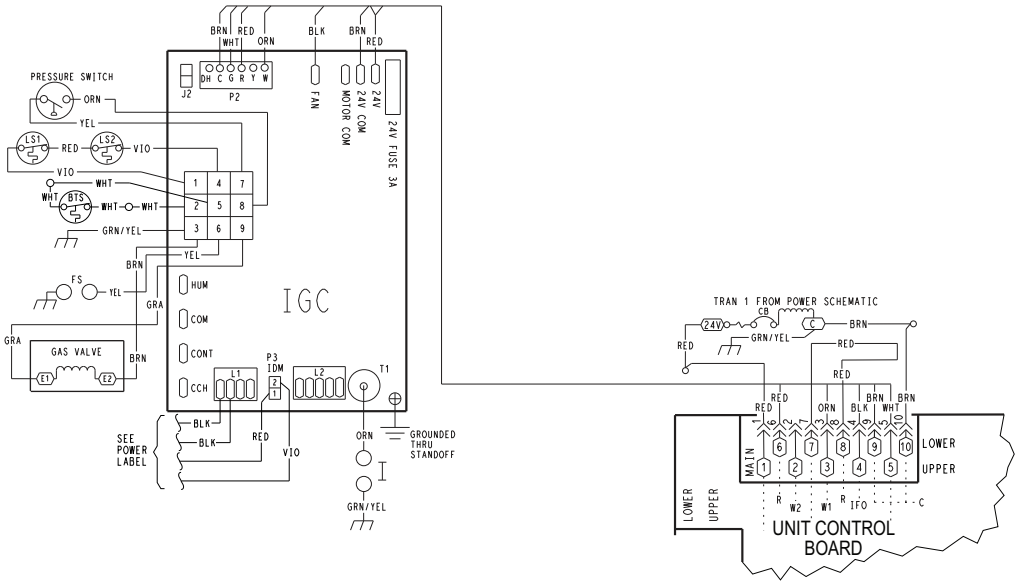

Fig. 51 — Typical IGC Control Wiring Diagram

Table 5 — IGC Board LED Alarm Codes

FLASH CODE	SYMPTOM	CAUSE	REMEDY
ON	Normal Operation	—	—
OFF	No Power or Hardware Failure	Loss of power to control module (IGC)	Check 5-amp fuse on the ICG, power to unit, 24V circuit breaker, and transformer. Units without a 24V circuit breaker have an internal overload in the 24V transformer. If the overload trips, allow 10 minutes for automatic reset.
1 Flash	Check Fuse, Low Voltage Circuit	Fuse is blown or missing, or short circuit in secondary (24 VAC) wiring.	Replace fuse if needed. Verify no short circuit in low voltage (24 VAC) wiring.
2 Flashes	Limit Switch Fault	High temperature limit switch is open.	Check the operation of the indoor (evaporator) fan motor. Ensure that the supply-air temperature rise is in accordance with the range on the unit nameplate. Clean or replace filters.
3 Flashes	Flame is Sense Fault	The IGC sensed flame that should not be present.	Reset unit. If problem persists, replace the IGC board.
4 Flashes	Four Consecutive Limit Switch Faults	Inadequate airflow to unit.	Check the operation of the indoor (evaporator) fan motor and that supply-are temperature rise agrees with range on the unit nameplate information.
5 Flashes	Ignition Lockout Fault	Unit unsuccessfully attempted ignition for 4 times.	Check igniter and flame sensor electrode spacing, gaps, etc. Ensure that flame sense and ignition wires are properly terminated. Verify that unit is obtaining proper amount of gas.
6 Flashes	Pressure Switch Fault	Open pressure switch.	Verify wiring connections to pressure switch and inducer motor. Verify pressure switch hose is tightly connected to both inducer housing and pressure switch. Verify inducer wheel is properly attached to inducer motor shaft. Verify inducer motor shaft is turning. In 460V units check the transformer designed for the inducer motor is operational. Also check the fuses for the inducer motor transformer (460V units only).
7 Flashes	Burner Thermal Switch Fault	Burner thermal switch is open	The burner thermal switch will automatically reset, but IGC will continue to lockout unit. Check any possible blockage in the access panel louver, intake tube connected to the burner box, and the flue gas exhaust. Check gas valve operation. Ensure that induced-draft blower wheel is properly secured to motor shaft. Inspect the burner mesh inside the burner box by opening the side window on the burner box. Reset the unit disconnect.
8 Flashes	Internal Control Fault	Microprocessor has sensed an error in the software or hardware.	If error code is not cleared by resetting unit power, replace the IGC board.

LEGEND

IGC — Integrated Gas Unit Control
LED — Light-Emitting Diode

NOTES:
1. There is a 3-second pause between alarm code displays.
2. If more than one alarm code exists, all applicable alarm codes will be displayed in numerical sequence.
3. Alarm codes on the IGC will be lost if power to the unit is interrupted.

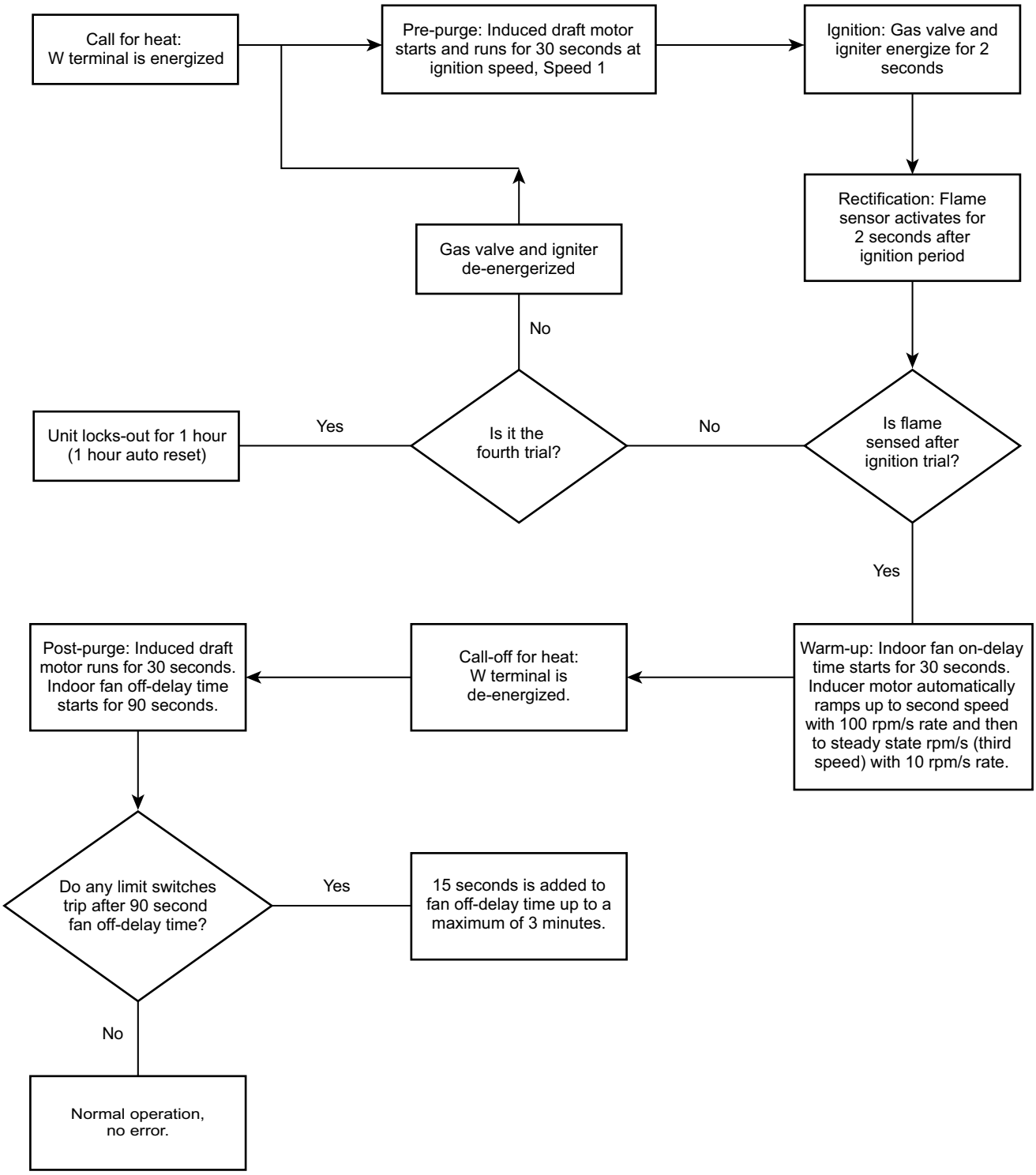

Fig. 52 — IGC Operating Sequence

EconoMi$er® X (Factory Option)

The EconoMi$er X system is an expandable economizer control system, which includes a W7220 economizer module (controller) with an LCD and keypad (see Fig. 53). The W7220 can be configured with optional sensors.

Fig. 53 — W7220 Economizer Module

The W7220 economizer module can be used as a stand-alone economizer module wired directly to a commercial set-back space thermostat and sensors to provide outside air dry-bulb economizer control.

The W7220 economizer module can be connected to optional sensors for single or differential enthalpy control. The W7220 economizer module provides power and communications for the sensors.

The W7220 economizer module automatically detects sensors by polling to determine which sensors are present. If a sensor loses communications after it has been detected, the W7220 economizer controller indicates a device fail error on its LCD.

SYSTEM COMPONENTS

The EconoMi$er X system includes an economizer module, 20k mixed air sensor, damper actuator, and either a 20k outdoor air temperature sensor or S-Bus enthalpy sensors.

Economizer Module

The module is the core of the EconoMi$er X system. The module is mounted in the unit's control box, and includes the user interface for the system. The W7220 economizer module provides the basic inputs and outputs to provide simple economizer control. When used with the optional sensors, the economizer module provides more advanced economizer functionality.

S-Bus Enthalpy Control Sensors

The sensor is a combination temperature and humidity sensor which is powered by and communicates on the S-Bus. Up to three sensors may be configured with the W7220 economizer module.

CO_2 Sensor (optional)

The sensor can be added for Demand Controlled Ventilation (DCV).

SPECIFICATIONS

W7220 Economizer Module

The module is designed for use with 2 to 10 Vdc or bus communicating actuator. The module includes terminals for CO_2 sensor, Mixed Air sensor, and an Outdoor Dry Bulb sensor. Enthalpy and other options are available with bus sensors.

User Interface

Provides status for normal operation, setup parameters, checkout tests, and alarm and error conditions with a 2-line 16 character LCD display and four button keypad.

Electrical

- Rated Voltage — 20 to 30 Vac RMS, 50/60 Hz
- Transformer — 100 va maximum system input
- Nominal Power Consumption (at 24 Vac, 60 Hz) — 11.5 VA without sensors or actuators
- Relay Digital Output Rating at 30 Vac (maximum power from Class 2 input only) — 1.5A run:
  3.5A inrush at 0.45PF (200,000 cycles) or
  7.5A inrush at 0.45PF (100,000 cycles)
- External Sensors Power Output — 21 Vdc ± 5% at 48 mA

IMPORTANT: All inputs and outputs must be Class 2 wiring.

INPUTS

Sensors

NOTE: A Mixed Air (MA) analog sensor is required on all W7220 units; either an Outdoor Air (OA) sensor for dry bulb change over or an OA bus sensor for outdoor enthalpy change over is required in addition to the MA sensor. An additional Return Air (RA) bus sensor can be added to the system for differential enthalpy or dry bulb changeover. For differential dry bulb changeover a 20k ohm sensor is required in the OA and a bus sensor in the RA. DIP switch on RA bus sensor must be set in the RA position.

Dry Bulb Temperature (optional) and Mixed Air (required), 20k NTC

2-wire (18 to 22 AWG);

Temperature range –40°F to 150°F (–40°C to 65°C)

Temperature accuracy –0°F/+2°F

Temperature and Humidity, C7400S1000 (optional)

S-Bus; 2-wire (18 to 22 AWG)

Temperature range: –40°F to 150°F (–40°C to 65°C)

Temperature accuracy: –0°F/+2°F

Humidity range: 0 to 100% RH with 5% accuracy.

NOTE: Up to three (3) S-Bus sensors may be connected to the W7220 economizer module. For outdoor air (OA), return air (RA) and discharge (supply) air (DA).

4 Binary Inputs

1-wire 24 Vac + common GND (see page 34 for wiring details).

24 Vac power supply

20 to 30 Vac 50/60Hz; 100 VA Class 2 transformer.

OUTPUTS

Actuator Signal

2-10 Vdc; minimum actuator impedance is 2k ohm; bus two-wire output for bus communicating actuators.

Exhaust fan, Y1, Y2 and AUX1 O

All Relay Outputs (at 30 Vac):

Running: 1.5A maximum

Inrush: 7.5A maximum

ENVIRONMENTAL

Operating Temperature

–40°F to 150°F (–40°C to 65°C).

Exception of display operation down to –4°F (–20°C) with full recovery at –4°F (–20°C) from exposure to –40°F (–40°C)

Storage Temperature

–40°F to 150°F (–40°C to 65°C)

Shipping Temperature

–40°F to 150°F (–40°C to 65°C)

Relative Humidity

5% to 95% RH non-condensing

ECONOMIZER MODULE WIRING DETAILS

Use Fig. 54 and Tables 6 and 7 to locate the wiring terminals for the economizer module.

NOTE: The four terminal blocks are removable. Slide out each terminal block, wire it, and then slide it back into place.

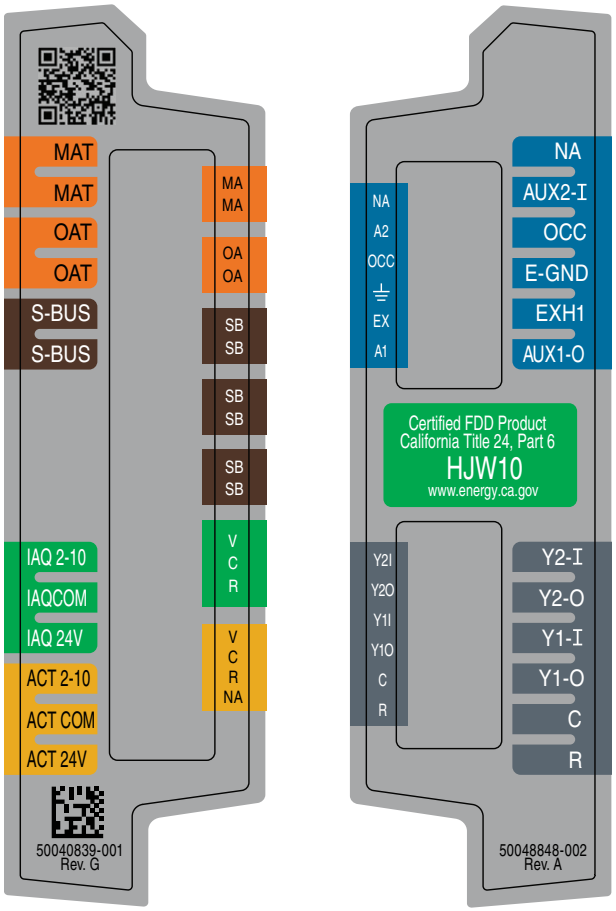

Fig. 54 — W7220 Wiring Terminals

Table 6 — Economizer Module - Left Hand Terminal Blocks

LABEL	TYPE	DESCRIPTION
Top Left Terminal Block		
MAT MAT	20k NTC and COM	Mixed Air Temperature Sensor (Polarity Insensitive Connection)
OAT OAT	20k NTC and COM	Outdoor Air Temperature Sensor (Polarity Insensitive Connection)
S-BUS S-BUS	S-BUS (Sylk* Bus)	Enthalpy Control Sensor (Polarity Insensitive Connection)
Bottom Left Terminal Block		
IAQ 2-10	2-10 vdc	Air Quality Sensor Input (e.g. CO_2 sensor)
IAQ COM	COM	Air Quality Sensor Common
IAQ 24V	24 vac	Air Quality Sensor 24 vac Source
ACT 2-10	2-10 vdc	Damper Actuator Output (2-10 vdc)
ACT COM	COM	Damper Actuator Output Common
ACT 24v	24 vac	Damper Actuator 24 vac Source

*Sylk is a trademark of Honeywell International Inc.

Table 7 — Economizer Module - Right Hand Terminal Blocks

LABEL	TYPE	DESCRIPTION
Top Right Terminal Blocks		
AUX2 I	24 vac IN	The first terminal is not used.
OCC	24 vac IN	Shut Down (SD) or HEAT (W) Conventional only and Heat Pump Changeover (O-B) in Heat Pump mode.
E-GND	E-GND	Occupied/Unoccupied Input
EXH1	24 vac OUT	Exhaust Fan 1 Output
AUX1 O	24 vac OUT	Programmable: Exhaust fan 2 output or ERV or System alarm output
Bottom Right Terminal Blocks		
Y2-I	24 vac IN	Y2 in - Cooling Stage 2 Input from space thermostat
Y2-O	24 vac OUT	Y2 out - Cooling Stage 2 Output to stage 2 mechanical cooling
Y1-I	24 vac IN	Y1 in - Cooling Stage 2 Input from space thermostat
Y1-O	24 vac OUT	Y1 out - Cooling Stage 2 Output to stage 2 mechanical cooling
C	COM	24 vac Common
R	24 vac	24 vac Power (hot)

S-BUS SENSOR WIRING

The labels on the sensors and controller are color coded for ease of installation. Orange labeled sensors can only be wired to orange terminals on the controller. Brown labeled sensors can only be wired to S-bus (brown) terminals. Use Fig. 55 and Table 8 to locate the wiring terminals for each S-Bus sensor.

Use Fig. 55 and Table 8 to locate the wiring terminals for each enthalpy control sensor.

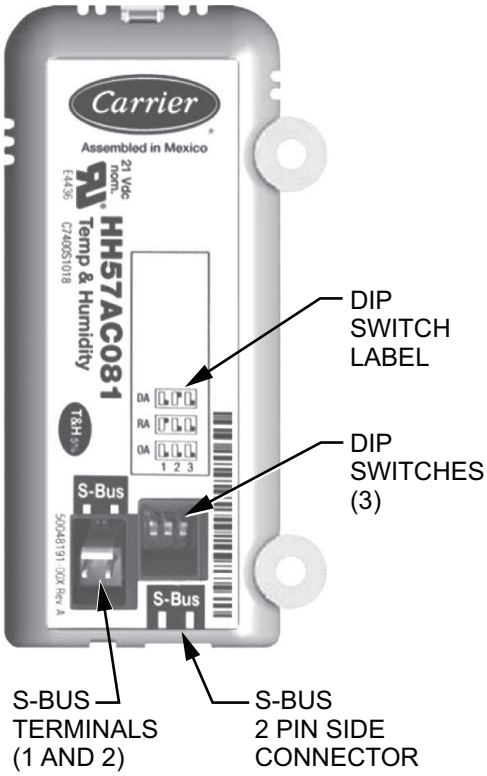

Fig. 55 — S-Bus Sensor DIP Switches

Table 8 — HH57AC081 Sensor Wiring Terminations

TERMINAL		TYPE	DESCRIPTION
NUMBER	LABEL		
1	S-BUS	S-BUS	S-BUS Communications (Enthalpy Control Sensor Bus)
2	S-BUS	S-BUS	S-BUS Communications (Enthalpy Control Sensor Bus)

Use Fig. 55 and Table 9 to set the DIP switches for the desired use of the sensor.

Table 9 — HH57AC081 Sensor DIP Switch

USE	DIP SWITCH POSITIONS FOR SWITCHES 1, 2, AND 3		
	1	2	3
DA	OFF	ON	OFF
RA	ON	OFF	OFF
OA	OFF	OFF	OFF

NOTE: When an S-Bus sensor is connected to an existing network, it will take 60 minutes for the network to recognize and auto-configure itself to use the new sensor.

During the 60 minute setup period, no alarms for sensor failures (except SAT) will be issued and no economizing function will be available.

CO_2 SENSOR WIRING

When using a CO_2 sensor, the black and brown common wires are internally connected and only one is connected to "IAQ COM" on the W7220. Use the power from the W7220 to power the CO_2 sensor OR make sure the ground for the power supplies are common. See Fig. 56 for CO_2 sensor wiring.

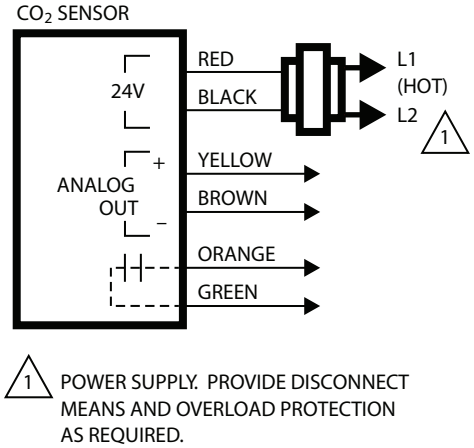

Fig. 56 — CO_2 Sensor Wiring

INTERFACE OVERVIEW

This section describes how to use the EconoMi$er® X user interface for:

- Keypad and menu navigation
- Settings and parameter changes
- Menu structure and selection

User Interface

The user interface consists of a 2-line LCD display and a 4-button keypad on the front of the economizer controller.

Keypad

Use the four navigation buttons (see Fig. 57) to scroll through the menus and menu items, select menu items, and to change parameter and configuration settings.

To use the keypad when working with menus:

- Press the ▲ (Up arrow) button to move to the previous menu.
- Press the ▼ (Down arrow) button to move to the next menu.
- Press the ↵ (Enter) button to display the first item in the currently displayed menu.
- Press the ⓪ (Menu Up/Exit) button to exit a menu's item and return to the list of menus.

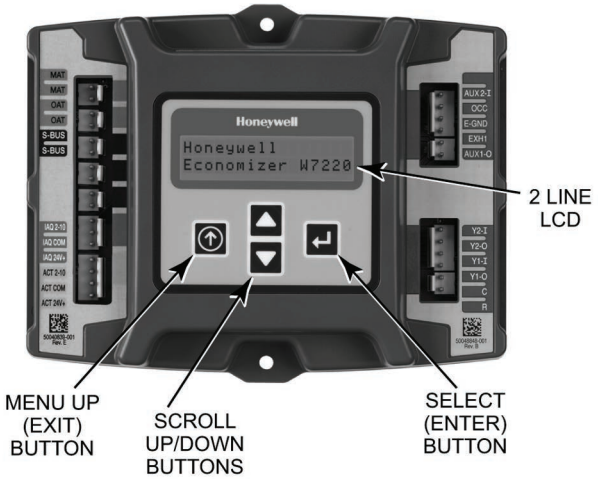

Fig. 57 — W7220 Controller Navigation Buttons

To use the keypad when working with Setpoints, System and Advanced Settings, Checkout tests and Alarms:

1. Navigate to the desired menu.
2. Press the ↵ (Enter) button to display the first item in the currently displayed menu.
3. Use the ▲ and ▼ buttons to scroll to the desired parameter.
4. Press the ↵ (Enter) button to display the value of the currently displayed item.
5. Press the ▲ button to increase (change) the displayed parameter value.
6. Press the ▼ button to decrease (change) the displayed parameter value.

NOTE: When values are displayed, pressing and holding the ▲or ▼ button causes the display to automatically increment or decrement.

1. Press the ↵ (Enter) button to accept the displayed value and store it in nonvolatile RAM. "CHANGE STORED" displays.
2. Press the ↵ (Enter) button to return to the current menu parameter.
3. Press the ⓪ (Menu Up/Exit) button to return to the previous menu.

Menu Structure

Table 10 illustrates the complete hierarchy of menus and parameters for the EconoMi$er® X system.

The Menus in display order are:

- STATUS
- SETPOINTS
- SYSTEM SETUP
- ADVANCED SETUP
- CHECKOUT
- ALARMS

IMPORTANT: Table 10 illustrates the complete hierarchy. Your menu parameters may be different depending on your configuration.

For example, if you do not have a DCV (CO_2) sensor, then none of the DCV parameters appear and only MIN POS will display. If you have a CO_2 sensor, the DCV MIN and DCV MAX will appear.

NOTE: Some parameters in the menus use the letters MA or MAT, indicating a mixed air temperature sensor location before the cooling coil. This unit application has the control sensor located after the cooling coil, in the fan section, where it is designated as (Cooling) Supply Air Temperature or SAT sensor.

SETUP AND CONFIGURATION

Before being placed into service, the W7220 Economizer module must be set up and configured for the installed system.

IMPORTANT: During setup, the economizer module is live at all times.

The setup process uses a hierarchical menu structure that is easy to use. Press the ▲ and ▼ arrow buttons to move forward and backward through the menus and press the button to select and confirm setup item changes.

TIME-OUT AND SCREENSAVER

When no buttons have been pressed for 10 minutes, the LCD displays a screen saver, which cycles through the Status items. Each Status items displays in turn and cycles to the next item after 5 seconds.

Table 10 — W7220 Menu Structure*

MENU	PARAMETER	PARAMETER DEFAULT VALUE	PARAMETER RANGE AND INCREMENT†	NOTES
STATUS	ECONO AVAIL	NO	YES/NO	FIRST STAGE COOLING DEMAND (Y1–IN) YES = economizing available; the system can use outside air for free cooling when required
	ECONOMIZING	NO	YES/NO	FIRST STAGE COOLING RELAY OUTPUT YES = outside air being used for 1 stage cooling
	OCCUPIED	NO	YES/NO	OCCUPIED YES = OCC signal received from space thermostat or unitary controller YES = 24 Vac on terminal OCC NO = 0 Vac on terminal OCC
	HEAT PUMP	N/A**	COOL HEAT	HEAT PUMP MODE Displays COOL or HEAT when system is set to heat pump (Non-conventional)
	COOL Y1—IN	OFF	ON/OFF	FIRST STAGE COOLING DEMAND (Y1-IN) Y1–I signal from space thermostat or unitary controller for cooling stage 1. ON = 24 Vac on terminal Y1–I OFF = 0 Vac on terminal Y1–I
	COOL Y1—OUT	OFF	ON/OFF	FIRST STAGE COOLING RELAY OUTPUT Cool stage 1 Relay Output to stage 1 mechanical cooling (Y1–OUT terminal)
	COOL Y2—IN	OFF	ON/OFF	SECOND STAGE COOLING DEMAND (Y2–IN) Y2–I signal from space thermostat our unitary controller for second stage cooling. ON = 24 Vac on terminal Y2–I OFF = 0 Vac on terminal Y2–I
	COOL Y2—OUT	OFF	ON/OFF	SECOND STAGE COOLING RELAY OUTPUT Cool Stage 2 Relay Output to mechanical cooling (Y2–OUT terminal)
	MA TEMP	_ _ · _ F	0°F to 140°F (–17°C to 60°C)	SUPPLY AIR TEMPERATURE, Cooling Mode Displays value of measured mixed air from MAT sensor. Displays _ _ . _ F if not connected, short or out-of-range.
	DA TEMP	_ _ · _ F	0°F to 140°F (–17°C to 60°C)	DISCHARGE AIR TEMPERATURE, after Heating section Displays when Discharge Air sensor is connected and displays measured discharge temperature. Displays _ _ . _F if sensor sends invalid value, if not connected, short or out-of-range.
	OA TEMP	_ _ · _ F	–40°F to 140°F (–40°C to 60°C)	OUTSIDE AIR TEMP Displays measured value of outdoor air temperature. Displays _ _ . _F if sensor sends invalid value, short or out-of-range.
	OA HUM	_ _ %	0 to 100%	OUTSIDE AIR RELATIVE HUMIDITY Displays measured value of outdoor humidity from OA sensor. Displays _ _% if not connected short, or out-of-range.
	RA TEMP	_ _ · _ F	0°F to 140°F (–17°C to 60°C)	RETURN AIR TEMPERATURE Displays measured value of return air temperature from RAT sensor. Displays _ _ . _ F if sensor sends invalid value, if not connected, short or out-of-range
	RA HUM	_ _ %	0 to 100%	RETURN AIR RELATIVE HUMIDITY Displays measured value of return air humidity from RA sensor. Displays _ _% if sensor sends invalid value, if not connected, short or out-of-range
	IN CO2	_ _ _ ppm	0 to 2000 ppm	SPACE/RETURN AIR CO_2 Displays value of measured CO_2 from CO_2 sensor. Invalid if not connected, short or out-of-range
	DCV STATUS	N/A	ON/OFF	DEMAND CONTROLLED VENTILATION STATUS Displays ON if above setpoint and OFF if below setpoint, and ONLY if a CO_2 sensor is connected.
	DAMPER OUT	2.0v	2.0 to 10.0v	Displays voltage output to the damper actuator.
	ACT POS	N/A	0 to 100%	Displays actual position of outdoor air damper actuator
	ACT COUNT	N/A	1 to 65535	Displays number of times actuator has cycled. 1 cycles equals 180 deg. of actuator movement in any direction.
	ACTUATOR	N/A	OK/Alarm (on Alarm menu)	Displays ERROR if voltage or torque is below actuator range.
	EXH1 OUT	OFF	ON/OFF	EXHAUST STAGE 1 RELAY OUTPUT Output of EXH1 terminal: ON = relay closed OFF = relay open
	EXH2 OUT	OFF	ON/OFF	EXHAUST STAGE 2 RELAY OUTPUT Output of AUX terminal; displays only if AUX = EXH2
	ERV	OFF	ON/OFF	ENERGY RECOVERY VENTILATOR Output of AUX terminal; displays only if AUX = ERV

Table 10 — W7220 Menu Structure* (cont)

MENU	PARAMETER	PARAMETER DEFAULT VALUE	PARAMETER RANGE AND INCREMENT†	NOTES
STATUS (cont)	MECH COOL ON or HEAT STAGES ON	0	0, 1, or 2	Displays stage of mechanical cooling that is active. Displays the stage of heat pump heating that is active.
	FAN SPEED	N/A	LOW or HIGH	SUPPLY FAN SPEED Displays speed setting of fan on a 2-speed fan unit.
	W (HEAT ON)	N/A	ON/OFF	HEAT DEMAND STATUS Displays status of heat demand on a 2-speed fan unit.
SETPOINTS	MAT SET	53°F	38°F to 70°F (3°C to 21°C); increment by 1°F	MIXED AIR SETPOINT Setpoint determines where the economizer will modulate the OA damper to maintain the mixed air temperature.
	LOW T LOCK	32°F	–45°F to 80°F (–43°C to 27°C); increment by 1°F	COMPRESSOR LOW TEMPERATURE LOCKOUT Setpoint determines outdoor temperature when the mechanical cooling cannot be turned on. Commonly referred to as the Compressor lockout.
	DRYBLB SET	63°F	48°F to 80°F (9°C to 27°C); increment by 1°F	OA DRY BULB TEMPERATURE CHANGEOVER SETPOINT Setpoint determines where the economizer will assume outdoor air temperature is good for free cooling; e.g.; at 63°F unit will economize at 62°F and below and not economize at 64°F and above. There is a 2°F deadband. DRYBULB SET is only displayed if the economizer has a single dry bulb sensor.
	DRYBLB DIFF	0°F	0°F to 6°F Increment by 2°F	Drybulb Differential will only show if using dual drybulb - i.e. when an outdoor air temperature sensor C7250 is attached to OAT terminals and C7400S sensor is wired to S-Bus and configured for RAT (return air). Free cooling will be assumed whenever OA temp is at or below RAT minus this drybulb setting.
	ENTH CURVE	ES3	ES1,ES2,ES3, ES4, or ES5	ENTHALPY CHANGEOVER CURVE (Requires enthalpy sensor option) Enthalpy boundary “curves” for economizing using single enthalpy.
	DCV SET	1100ppm	500 to 2000 ppm; increment by 100	DEMAND CONTROLLED VENTILATION SETPOINT Displays only if CO_2 sensor is connected. Setpoint for Demand Controlled Ventilation of space. Above the setpoint, the OA dampers will modulate open to bring in additional OA to maintain a space ppm level below the setpoint.
	MIN POS	4.4 V	2 to 10 Vdc	VENTILATION MINIMUM POSITION. Only displayed if controller is set for single speed unit under FAN TYPE, and if DCV is NOT used.
	MIN POS L	6.0 V	2 to 10 Vdc	VENTILATION MINIMUM POSITION AT LOW SPEED. Only displays if unit is set for 2 or 3 speed and CO_2 is not used. If using 2 speed with 1 heat and 1 cool then set for HEATING ventilation. If using 3 speed with 1 heat and 2 cool then set for LOW SPEED COOLING ventilation.
	MIN POS M	5.4 V	2 to 10 Vdc	VENTILATION MINIMUM POSITION AT MEDIUM SPEED. Only displays if unit is set for 3 speed with 1 heat and 2 cool, and CO_2 is not used. Set for HEATING ventilation.
	MIN POS H	4.4 V	2 to 10 Vdc	VENTILATION MINIMUM POSITION AT HIGH SPEED. Only displays if unit is set for 2 or 3 speed and CO_2 is not used. IF using 2 speed with 1 heat and 1 cool then set for COOLING ventilation. If using 3 speed with 1 heat and 2 cool then set for HIGH SPEED COOLING ventilation.
	VENTMAX L	6.0V	2 to 10 Vdc	DCV MAXIMUM DAMPER POSITION AT LOW SPEED. Only displays if unit is set for 2 speed or 3 speed with 1 heat and 2 cool. IF using 2 speed with 1 heat and 1 cool then set for HEATING ventilation. If using 3 speed with 1 heat and 2 cool then set for LOW SPEED COOLING.
	VENTMAX M	5.4 V	2 to 10 Vdc	DCV MAXIMUM DAMPER POSITION AT MEDIUM SPEED. Only displays if unit is set for 3 speed with 1 heat and 2 cool. Set for HEATING ventilation.
	VENTMAX H	4.4 V	2 to 10 Vdc	DCV MAXIMUM DAMPER POSITION AT HIGH SPEED. Only displays if unit is set for 2 speed or 3 speed with 1 heat and 2 cool. IF using 2 speed with 1 heat and 1 cool then set for COOLING ventilation. If using 3 speed with 1 heat and 2 cool then set for HIGH SPEED COOLING ventilation.
	VENTMIN L	3.7 V	2 to 10 Vdc	DCV MINIMUM DAMPER POSITION AT LOW SPEED. Only displays if unit is set for 2 speed or 3 speed with 1 heat and 2 cool. IF using 2 speed with 1 heat and 1 cool then set for HEATING ventilation. If using 3 speed with 1 heat and 2 cool then set for LOW SPEED COOLING.
	VENTMIN M	3.4 V	2 to 10 Vdc	DCV MINIMUM DAMPER POSITION AT MEDIUM SPEED. Only displays if unit is set for 3 speed with 1 heat and 2 cool. Set for HEATING ventilation.
	VENTMIN H	2.8 V	2 to 10 Vdc	DCV MINIMUM DAMPER POSITION AT HIGH SPEED. Only displays if unit is set for 2 speed or 3 speed with 1 heat and 2 cool. IF using 2 speed with 1 heat and 1 cool then set for COOLING ventilation. If using 3 speed with 1 heat and 2 cool then set for HIGH SPEED COOLING ventilation.

Table 10 — W7220 Menu Structure* (cont)

MENU	PARAMETER	PARAMETER DEFAULT VALUE	PARAMETER RANGE AND INCREMENT†	NOTES
SETPOINTS (cont)	ERV OAT SP††	32°F	0°F to 50°F (–18°C to 10°C); increment by 1°F	ENERGY RECOVERY VENTILATOR UNIT OUTDOOR AIR TEMPERATURE SETPOINT Only displayed when AUX1 O = ERV
	EXH1 SET	50%	0 to 100%	Exhaust fan set point for single speed units. Based on OA Damper position to activate power exhaust.
	EXH1 L SET	65%	0 to 100%	EXHAUST FAN 1 SETPOINT AT LOW SPEED on 2 speed or 3 speed with 1 heat and 2 cool. Based on economizer OA damper position to activate power exhaust.
	EXH1 M SET	60%	0 to 100%	EXHAUST POINT 1 SETPOINT AT MEDIUM SPEED. Only displays if unit is set for 3 speed with 1 heat and 2 cool. Based on economizer OA damper position to activate power exhaust.
	EXH1 H SET	50%	0 to 100%	EXHAUST FAN 1 SETPOINT AT HIGH SPEED on 2 speed or 3 speed with 1 heat and 2 cool. Based on economizer OA damper position to activate power exhaust.
	EXH2 L SET	80%	0 to 100%	EXHAUST FAN 2 SETPOINT AT LOW SPEED on 2 speed or 3 speed with 1 heat and 2 cool. Based on economizer OA damper position to activate power exhaust.
	EXH2 M SET	77%	0 to 100%	EXHAUST FAN 2 SETPOINT AT MEDIUM SPEED. Only displays if unit is set for 3 speed with 1 heat and 2 cool. Based on economizer OA damper position to activate power exhaust.
	EXH2 H SET	75%	0 to 100%	EXHAUST FAN 2 SETPOINT AT HIGH SPEED on 2 speed or 3 speed with 1 heat and 2 cool. Based on economizer OA damper position to activate power exhaust.
SYSTEM SETUP	INSTALL	01/01/17	N/A	Display order = MM/DD/YY Setting order = DD, MM, then YY.
	UNITS DEG	F	F or C	Sets economizer controller in degrees Fahrenheit or Celsius
	EQUIPMENT	CONV	Conventional or HP	CONV = conventional; HP O/B = Enable Heat Pump mode. Use AUX2 I for Heat Pump input from thermostat or controller. See Menu Note 4.
	AUX2 IN	W	SD/W or HP(O)/ HP(B)	In CONV mode: SD + Enables configuration of shutdown (default); W = Informs controller that system is in heating mode. NOTE: If using 2-speed fan mode, you must program CONV mode for W. Shutdown is not available in 2-speed fan mode. See Menu Note 4. In HP O/B mode: HP(O) = energize heat pump on Cool (default); HP(B) = energize heat pump on heat.
	FAN SPEED	2 speed	1 speed 2 speed 2SP H/C 3 speed	Sets the economizer controller operation based on 1 speed, 2 speed, 2 speed heat/cool (2SP H/C), or 3 speed supply fan. NOTE: Multi-speed fan options also need Heat (W1) programmed in AUX 2 In. See Menu Note 4.
	FAN CFM	5000cfm	100 to 15000 cfm; increment by 100	UNIT DESIGN AIRFLOW (CFM) Enter only if using DCVAL ENA = AUTO The value is found on the nameplate label for the specific unit.
	AUX1 OUT	NONE	NONE ERV EXH2 SYS	Select OUTPUT for AUX1 O relay • NONE = not configured (output is not used) • ERV = Energy Recovery Ventilator†† • EXH2 = second damper position relay closure for second exhaust fan • SYS = use output as an alarm signal
	OCC	INPUT	INPUT or ALWAYS	OCCUPIED MODE BY EXTERNAL SIGNAL When using a setback thermostat with occupancy out (24 vac), the 24 vac is input “INPUT” to the OCC terminal. If no occupancy output from the thermostat then change program to “ALWAYS” OR add a jumper from terminal R to OCC terminal.
	FACTORY DEFAULT	NO	NO or YES	Resets all set points to factory defaults when set to YES. LCD will briefly flash YES and change to NO but all parameters will change to the factory default values. NOTE: RECHECK AUX2 IN and FANTYPE for required 2-speed values.
ADVANCED SETUP	MA LO SET	45°F	35°F to 55°F (2°C to 13°C); Incremented by 10°F	SUPPLY AIR TEMPERATURE LOW LIMIT Temperature to achieve Freeze Protection (close damper and alarm if temperature falls below setup value).
	FREEZE POS	CLO	CLO or MIN	FREEZE PROTECTION DAMPER POSITION Damper position when freeze protection is active (closed or MIN POS).
	CO2 ZERO	0ppm	0 to 500 ppm; Increment by 10	CO_2 ppm level to match CO_2 sensor start level.
	CO2 SPAN	2000ppm	1000 to 3000 ppm; Increment by 10	CO_2 ppm span to match CO_2 sensor.

Table 10 — W7220 Menu Structure* (cont)

MENU	PARAMETER	PARAMETER DEFAULT VALUE	PARAMETER RANGE AND INCREMENT†	NOTES
ADVANCED SETUP (cont)	STG3 DLY	2.0h	0 min, 5 min, 15 min, then 15 min intervals. Up to 4 hrs or OFF	COOLING STAGE 3 DELAY Delay after stage 2 cool has been active. Turns on second stage of cooling when economizer is first stage and mechanical cooling is second stage. Allows three stages of cooling, 1 economizer and 2 mechanical. OFF = no Stage 3 cooling
	SD DMPR POS	CLO	CLO or OPN	Indicates shutdown signal from space thermostat or unitary controller. When controller receives 24 Vac input on the SD terminal in conventional mode, the OA damper will open if programmed for OPN and OA damper will close if programmed for CLO. All other controls, e.g., fans, etc. will shut off.
	DA LO ALM	45°F (7°C)	35°F to 65°F (2°C to 18°C); Incremented by 5°F.	Used for alarm for when the DA air temperature is too low. Set lower range of alarm, below this temperature the alarm will show on the display.
	DA HI ALM	80°F (27°C)	70°F to 180°F (21°C to 82°C); Incremented by 5°F	Used for alarm for when the DA air temperature is too high. Set upper range of alarm, above this temperature the alarm will show on the display.
	DCVCAL ENA	MAN	MAN (manual) AUTO	Turns on the DCV automatic control of the dampers. Resets ventilation based on the RA, OA, and MA sensor conditions. Requires all 3 RA, OA, and MA sensors.
	MAT T CAL	0.0°F	±2.5°F	SUPPLY AIR TEMPERATURE CALIBRATION Allows for the operator to adjust for an out of calibration temperature sensor.
	OAS T CAL	0.0°F	±2.5°F	OUTSIDE AIR TEMPERATURE CALIBRATION Allows for the operator to adjust for an out of calibration temperature sensor.
	OA H CAL	0% RH	±10% RH	OUTSIDE AIR HUMIDITY CALIBRATION Allows for operator to adjust for an out of calibration humidity sensor.
	RA T CAL	0.0°F	±2.5°F	RETURN AIR TEMPERATURE CALIBRATION Allows for the operator to adjust for an out of calibration temperature sensor.
	RA H CAL	0% RH	±10% RH	RETURN AIR HUMIDITY CALIBRATION Allows for operator to adjust for an out of calibration humidity sensor.
	DA T CAL	0.0°F	±2.5°F	DISCHARGE AIR TEMPERATURE CALIBRATION Allows for the operator to adjust for an out of calibration temperature sensor.
	2SP FAN DELAY	5 Minutes	0 to 20 minutes in 1 minute increments	TIME DELAY ON SECOND STAGE ECONOMIZING When in economizing mode this is the delay for the high speed fan to try to satisfy the call for second stage cooling before the first stage mechanical cooling is enabled.
CHECKOUT	DAMPER MINIMUM POSITION	N/A	N/A	The checkout for the damper minimum position is based on the system.
	DAMPER OPEN	N/A	N/A	Position damper to the full open position. Exhaust fan contacts enable during the DAMPER OPEN test. Make sure you pause in the mode to allow exhaust contacts to energize due to the delay in the system.
	DAMPER CLOSE	N/A	N/A	Positions damper to the fully closed position
	CONNECT Y1–O	N/A	N/A	Closes the Y1-O relay (Y1-O)
	CONNECT Y2–O	N/A	N/A	Closes the Y2-O relay (Y2-O)
	CONNECT AUX1-O	N/A	N/A	Energizes the AUX output. If Aux setting is: • NONE — not action taken • ERV — 24 Vac out. Turns on or signals an ERV that the conditions are not good for economizing but are for ERV operation.†† • SYS — 24 Vac out. Issues a system alarm
	CONNECT EXH1	N/A	N/A	Closes the power exhaust fan 2 relay (EXH1)
ALARMS	Alarms display only when they are active. The menu title “ALARMS(#)” includes the number of active alarms in parenthesis ( ). When using SYLK bus sensors, “SYLK” will appear on the screen, and when using 20k OA temperature sensors, “SENS T” will appear on the screen			
	MA T SENS ERR	N/A	N/A	SUPPLY AIR TEMPERATURE SENSOR ERROR Mixed air sensor has failed or become disconnected - check wiring then replace sensor if the alarm continues.
	CO2 SENS ERR	N/A	N/A	CO_2 SENSOR ERROR CO_2 sensor has failed, gone out of range or become disconnected - check wiring then replace sensor if the alarm continues.
	OA SYLK T ERR	N/A	N/A	OUTSIDE AIR S-BUS SENSOR ERROR Outdoor air enthalpy sensor has failed or become disconnected - check wiring then replace sensor if the alarm continues.
	OA SYLK H ERR	N/A	N/A	
	RA SYLK T ERR	N/A	N/A	RETURN AIR S-BUS SENSOR ERROR Return air enthalpy sensor has failed or become disconnected - check wiring then replace sensor if the alarm continues.
	RA SYLK H ERR	N/A	N/A	

Table 10 — W7220 Menu Structure* (cont)

MENU	PARAMETER	PARAMETER DEFAULT VALUE	PARAMETER RANGE AND INCREMENT†	NOTES
ALARMS (cont)	DA SYLK T ERR	N/A	N/A	DISCHARGE AIR S-BUS SENSOR ERROR Discharge air sensor has failed or become disconnected - check wiring then replace sensor if the alarm continues.
	OA SENS T ERR	N/A	N/A	OUTSIDE AIR TEMPERATURE SENSOR ERROR Outdoor air temperature sensor has failed or become disconnected - check wiring then replace if the alarm continues.
	ACT ERROR	N/A	N/A	ACTUATOR ERROR Actuator has failed or become disconnected - check for stall, over voltage, under voltage and actuator count. Replace actuator if damper is movable and supply voltage is between 21.6 V and 26.4 V. Check actuator count on STATUS menu.
	FREEZE ALARM	N/A	N/A	Check if outdoor temperature is below the LOW Temp Lockout on setpoint menu. Check if Mixed air temperature on STATUS menu is below the Lo Setpoint on Advanced menu. When conditions are back in normal range then the alarm will go away.
	SHUTDOWN ACTIVE	N/A	N/A	AUX2 IN is programmed for SHUTDOWN and 24 V has been applied to AUX2 IN terminal.
	DMP CAL RUNNING	N/A	N/A	DAMPER CALIBRATION ROUTINE RUNNING If DCV Auto enable has been programmed, when the W7220 is completing a calibration on the dampers, this alarm will display. Wait until the calibration is completed and the alarm will go away. Must have OA, MA and RA sensors for DCV calibration; set up in the Advanced setup menu.
	DA SENS ALM	N/A	N/A	DISCHARGE AIR TEMPERATURE SENSOR ALARM Discharge air temperature is out of the range set in the ADVANCED SETUP Menu. Check the temperature of the discharge air.
	SYS ALARM	N/A	N/A	When AUX1-O is set to SYS and there is any alarm (e.g., failed sensors, etc.), the AUX1-O terminal has 24 Vac out.
	ACT UNDER V	N/A	N/A	ACTUATOR VOLTAGE LOW Voltage received by actuator is above expected range.
	ACT OVER V	N/A	N/A	ACTUATOR VOLTAGE HIGH Voltage received by actuator is below expected range.
	ACT STALLED	N/A	N/A	ACTUATOR STALLED Actuator stopped before achieving commanded position.

LEGEND

CLO — Compressor Lockout
ERV — Energy Recovery Ventilator
LCD — Liquid Crystal Display
MA — Mixed Air
MAT — Mixed Air Temperature
N/A — Not Applicable
OA — Outdoor Air
OAT — Outdoor Air Temperature
OCC — Occupied
RA — Return Air
RAT — Return Air Temperature
RTU — Rooftop Unit
SYS — System

* Table 10 illustrates the complete hierarchy. Your menu parameters may be different depending on your configuration. For example if you do not have a DCV (CO_2) sensor, then none of the DCV parameters appear.

† When values are displayed, pressing and holding the ▲ or ▼ button causes the display to automatically increment.

** N/A = Not Applicable.

†† ERV Operation: When in cooling mode AND the conditions are NOT OK for economizing - the ERV terminal will be energized. In the Heating mode, the ERV terminal will be energized when the OA is below the ERV OAT setpoint in the setpoint menu.

NOTES:

1. STATUS → OCCUPIED — The factory-standard Occupancy signal originates with a thermostat or other controller call for indoor fan operation at UCB terminal G. This signal passes through the Unit Control Board's OCCUPANCY jumper to the ECONO connector and to the W7220's OCC input terminal.An external timeclock or relay is required to implement an Occupancy schedule on the economizer damper position.
2. STATUS → MA TEMP, SETPOINTS → MAT SET — The W7220 menu parameters and labels include designations MA, MAT and Mixed Air for the economizer cooling control sensor. On these rooftop units, the economizer control sensor is located downstream of the evaporator/indoor coil in the supply fan section where this sensor is designated as Supply Air Temperature (SAT) sensor.
3. SETPOINTS → DRYBLB SET — This point is not displayed if a Return Air (differential) temperature sensor or an Outdoor Air enthalpy sensor is connected.
4. SYSTEM SETUP parameters must be configured as noted for Multi-Speed unit operation:
   EQUIPMENT = CONV
   AUX2 IN = W
   FAN SPEED = 2SPEED
   or
   FAN SPEED = 3SPEED
   NOTE: 1SPEED and 2SP H/C are not used on 48GCG units.

ENTHALPY SETTINGS

When the OA temperature, enthalpy and dew point are below the respective setpoints, the Outdoor Air can be used for economizing. Fig. 58 shows the new single enthalpy boundaries in the W7220. There are 5 boundaries (setpoints ES1 through ES5), which are defined by dry bulb temperature, enthalpy and dew point.

Refer to Table 11 for ENTH CURVE setpoint values.

The W7220 calculates the enthalpy and dew point using the OA temperature and humidity input from the OA enthalpy sensor. When the OA temperature, OA humidity and OA dew point are all below the selected boundary, the economizer sets the economizing mode to YES, economizing is available.

When all of the OA conditions are above the selected boundary, the conditions are not good to economize and the mode is set to NO.

Figure 58 shows the 5 current boundaries. There is also a high limit boundary for differential enthalpy. The high limit boundary is ES1 when there are no stages of mechanical cooling energized and HL (high limit) when a compressor stage is energized.

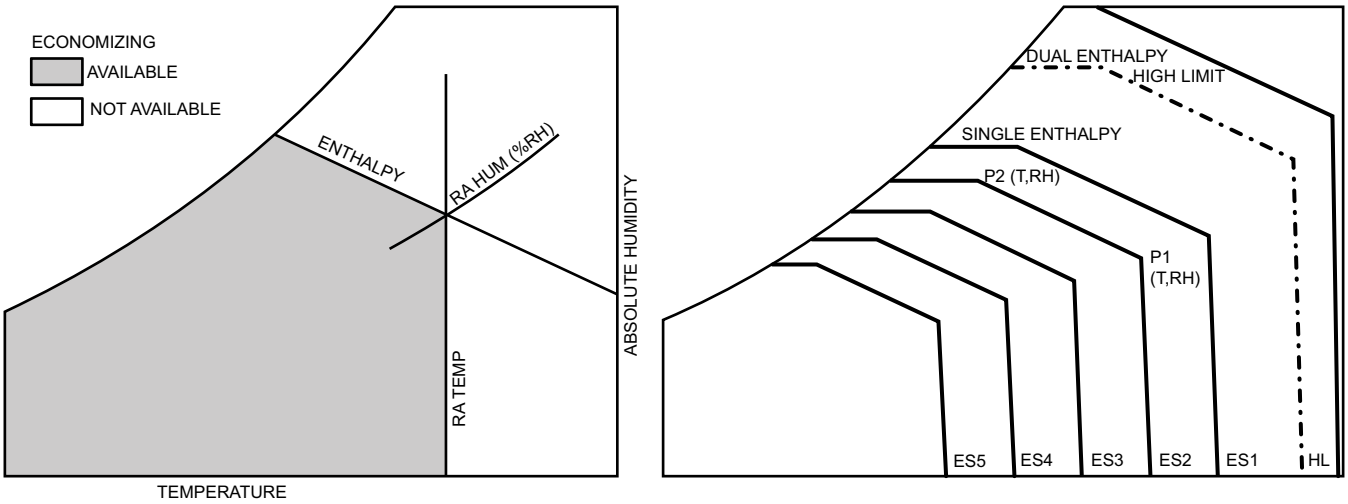

Fig. 58 — Single Enthalpy Curve Boundaries

Table 11 — Single Enthalpy and Dual Enthalpy High Limit Curves

ENTHALPY CURVE	TEMP. DRY BULB (F)	TEMP. DEWPOINT (F)	ENTHALPY (btu/lb/da)	POINT P1		POINT P2	
				TEMP. (F)	HUMIDITY (%RH)	TEMP. (F)	HUMIDITY (%RH)
ES1	80	60	28.0	80	36.8	66.3	80.1
ES2	75	57	26.0	75	39.6	63.3	80.0
ES3	70	54	24.0	70	42.3	59.7	81.4
ES4	65	51	22.0	65	44.8	55.7	84.2
ES5	60	48	20.0	60	46.9	51.3	88.5
HL	86	66	32.4	86	38.9	72.4	80.3

STANDARD OR SINGLE SPEED FAN OPERATION

FAN TYPE = 1SPEED is not used on 48GCG units.

2 SPEED FAN OPERATION

The W7220 controller has the capability to work with a system using a 2-speed supply fan. The W7220 does not control the supply directly but uses the following input status to determine the speed of the supply fan and controls the OA damper to the required position, see Table 12.

Table 12 — Fan Speed

STATE	FAN SPEED
OCC	Low
Y1	Low
Y2	High
W	High

The W (heating mode) is not controlled by the W7220 but it requires the status to know where to position the OA damper for minimum position for the fan speed.

The 2 speed fan delay is available when the system is programmed for 2 speed fan (in the System Setup menu item). The 2 speed fan delay is defaulted to 5 minutes and can be changed in the Advanced Setup menu item. When the unit has a call for Y1 In and in the free cooling mode and there is a call for Y2 In, the 2-speed fan delay starts and the OA damper will modulate 100% open, the supply fan should be set to high speed by the unit controller. See Table 13.

After the delay, one of two actions will happen:

- The Y2 In call will be satisfied with the damper 100% open and fan on high speed and the call will turn off

OR

- If the call for additional cooling in the space has not been satisfied, then the first stage of mechanical cooling will be enabled through Y1 Out or Y2 Out.

Table 13 — Economizer Operation - FAN TYPE = 2SPEED

INPUTS					OUTPUTS				
DEMAND CONTROLLED VENTILATION (DCV)	OUTSIDE AIR GOOD TO ECONOMIZE	W (HEAT ON)	COOL Y1-IN	COOL Y2-IN	COOL Y1-OUT	COOL Y2-OUT	FAN SPEED (reference only)	DAMPER POSITION	
								OCCUPIED	UNOCCUPIED
NONE	NO	ON	N/A	N/A	OFF	OFF	HIGH	MIN POS H	Closed
		OFF	OFF	OFF	OFF	OFF	LOW	MIN POS L	Closed
		OFF	ON	OFF	ON	OFF	LOW	MIN POS L	Closed
		OFF	ON	ON	ON	ON	HIGH	MIN POS H	Closed
	YES	ON	N/A	N/A	OFF	OFF	HIGH	MIN POS H	Closed
		OFF	OFF	OFF	OFF	OFF	LOW	MIN POS L	Closed
		OFF	ON	OFF	OFF	OFF	LOW	MIN POS L to Full Open	Closed to Full Open
		OFF	ON	ON	ON	OFF*	HIGH	MIN POS H to Full Open	Closed to Full Open
Below CO_2 Set	NO	ON	N/A	N/A	OFF	OFF	HIGH	VENTMIN H	Closed
		OFF	OFF	OFF	OFF	OFF	LOW	VENTMIN L	Closed
		OFF	ON	OFF	ON	OFF	LOW	VENTMIN L	Closed
		OFF	ON	ON	ON	ON	HIGH	VENTMIN H	Closed
	YES	ON	N/A	N/A	OFF	OFF	HIGH	VENTMIN H	Closed
		OFF	OFF	OFF	OFF	OFF	LOW	VENTMIN L	Closed
		OFF	ON	OFF	OFF	OFF	LOW	VENTMIN L to Full Open	Closed to Full Open
		OFF	ON	ON	ON	OFF*	HIGH	VENTMIN H to Full Open	Closed to Full Open
Above CO_2 Set	NO	ON	N/A	N/A	OFF	OFF	HIGH	VENTMIN H to VENTMAX H	Closed
		OFF	OFF	OFF	OFF	OFF	LOW	VENTMIN L to VENTMAX L	Closed
		OFF	ON	OFF	ON	OFF	LOW	VENTMIN L to VENTMAX L	Closed
		OFF	ON	ON	ON	ON	HIGH	VENTMAX H to VENTMAX H	Closed
	YES	ON	N/A	N/A	OFF	OFF	HIGH	VENTMIN H to VENTMAX H	Closed
		OFF	OFF	OFF	OFF	OFF	LOW	VENTMIN L to VENTMAX L	Closed
		OFF	ON	OFF	OFF	OFF*	LOW	VENTMIN L to Full Open	Closed to Full Open
		OFF	ON	ON	ON	OFF*	HIGH	VENTMIN H to Full Open	Closed to Full Open

*With stage 3 delay (STG3 DLY) in Advanced setup, COOL Y2-OUT will be turned ON after the delay time specified.
N/A = Not applicable

2SP H/C (2 SPEED HEAT/COOL) FAN OPERATION

FAN TYPE = 2SP H/C is not used on 48GCG units.

3 SPEED FAN OPERATION (SINGLE PHASE UNITS ONLY)

The W7220 controller does not actually control the fan speed or the heat output of the unit, and only uses this information to help determine the damper position. On single phase units, the unit control board (UCB) will reduce the fan speed during heating when the configured fan speed is set outside the optimized heating speed window. If the job site application forces this reduction in fan speed during heat, the economizer FAN TYPE must be set to keep the appropriate outside air intake.

On single phase 48GCG units, if reduced the heating fan speed is lower than the high cooling speed and higher than the low cooling speed, hence the medium speed name. The economizer FAN TYPE needs to be set to 3SPEED (3 speed). This indicates that the heating fan speed is between the Low cool/vent fan speed and the High cool speed. Refer to Table 14 for economizer operation.

Table 14 — Economizer Operation - FAN TYPE = 3SPEED

INPUTS					OUTPUTS				
DEMAND CONTROLLED VENTILATION (DCV)	OUTSIDE AIR GOOD TO ECONOMIZE	W (HEAT ON)	COOL Y1-IN	COOL Y2-IN	COOL Y1-OUT	COOL Y2-OUT	FAN SPEED (reference only)	DAMPER POSITION	
								OCCUPIED	UNOCCUPIED
NONE	NO	ON	N/A	N/A	OFF	OFF	MEDIUM	MIN POS M	Closed
		OFF	OFF	OFF	OFF	OFF	LOW	MIN POS L	Closed
		OFF	ON	OFF	ON	OFF	LOW	MIN POS L	Closed
		OFF	ON	ON	ON	ON	HIGH	MIN POS H	Closed
	YES	ON	N/A	N/A	OFF	OFF	MEDIUM	MIN POS M	Closed
		OFF	OFF	OFF	OFF	OFF	LOW	MIN POS L	Closed
		OFF	ON	OFF	OFF	OFF	LOW	MIN POS L to Full Open	Closed to Full Open
		OFF	ON	ON	ON	OFF*	HIGH	MIN POS H to Full Open	Closed to Full Open
Below CO_2 Set	NO	ON	N/A	N/A	OFF	OFF	MEDIUM	VENTMIN M	Closed
		OFF	OFF	OFF	OFF	OFF	LOW	VENTMIN L	Closed
		OFF	ON	OFF	ON	OFF	LOW	VENTMIN L	Closed
		OFF	ON	ON	ON	ON	HIGH	VENTMIN H	Closed
	YES	ON	N/A	N/A	OFF	OFF	MEDIUM	VENTMIN M	Closed
		OFF	OFF	OFF	OFF	OFF	LOW	VENTMIN L	Closed
		OFF	ON	OFF	OFF	OFF	LOW	VENTMIN L to Full Open	Closed to Full Open
		OFF	ON	ON	ON	OFF*	HIGH	VENTMIN H to Full Open	Closed to Full Open
Above CO_2 Set	NO	ON	N/A	N/A	OFF	OFF	MEDIUM	VENTMIN M to VENTMAX M	Closed
		OFF	OFF	OFF	OFF	OFF	LOW	VENTMIN L to VENTMAX L	Closed
		OFF	ON	OFF	ON	OFF	LOW	VENTMIN L to VENTMAX L	Closed
		OFF	ON	ON	ON	ON	HIGH	VENTMIN H to VENTMAX H	Closed
	YES	ON	N/A	N/A	OFF	OFF	MEDIUM	VENTMIN M to VENTMAX M	Closed
		OFF	OFF	OFF	OFF	OFF	LOW	VENTMIN L to VENTMAX L	Closed
		OFF	ON	OFF	OFF	OFF*	LOW	VENTMIN L to Full Open	Closed to Full Open
		OFF	ON	ON	ON	OFF*	HIGH	VENTMIN H to Full Open	Closed to Full Open

*With stage 3 delay (STG3 DLY) in Advanced setup, COOL Y2-OUT will be turned ON after the delay time specified.
N/A = Not applicable

CHECKOUT

Inspect all wiring connections at the economizer module's terminals, and verify compliance with the installation wiring diagrams. For checkout, review the Status of each configured parameter and perform the Checkout tests.

NOTE: For information about menu navigation and use of the keypad see Interface Overview on page 34.

⚠WARNING

ELECTRIC SHOCK HAZARD

Failure to follow this warning could result in personal injury, property damage, or death.

Before performing service or maintenance operations on unit, always turn off main power switch to unit and install lock(s) and lockout tag(s). Unit may have more than one power switch. Ensure electrical service to rooftop unit agrees with voltage and amperage listed on the unit rating plate.

If any wiring changes are required, first be sure to remove power from the economizer module before starting work. Pay particular attention to verifying the power connection (24 vac).

Power Up

After the W7220 module is mounted and wired, apply power.

Initial Menu Display

On initial start up, Honeywell displays on the first line and economizer W7220 on the second line. After a brief pause, the revision of the software appears on the first line and the second line will be blank.

Power Loss (Outage or Brownout)

All setpoints and advanced settings are restored after any power loss or interruption.

NOTE: All settings are stored in non-volatile flash memory.

Status

Use the Status menu (see Table 10) to check the parameter values for the various devices and sensors configured.

NOTE: For information about menu navigation and use of the keypad, see Interface Overview on page 34.

Checkout Tests

Use the Checkout menu (see page 39) to test the damper operation and any configured outputs. Only items that are configured are shown in the Checkout menu.

NOTE: For information about menu navigation and use of the keypad, see Interface Overview on page 34.

To perform a Checkout test:

1. Scroll to the desired test in the Checkout menu using the ▲ and ▼ buttons.
2. Press the ↵ (Enter) button to select the item. RUN? appears.
3. Press the ↵ (Enter) button to start the test. The unit pauses and then displays IN PROGRESS. When the test is complete, DONE appears.
4. When all desired parameters have been tested, press the ⓐ (Menu Up/Exit) button to end the test.

The Checkout tests can all be performed at the time of installation or at any time during the operation of the system as a test that the system is operable.

⚠CAUTION

EQUIPMENT DAMAGE HAZARD

Failure to follow this caution may result in equipment damage.

Be sure to allow enough time for compressor start-up and shutdown between checkout tests so that you do not short-cycle the compressors.

TROUBLESHOOTING

Alarms

The economizer module provides alarm messages that display on the 2-line LCD.

NOTE: Upon power up, the module waits 60 minutes before checking for alarms. This allows time for all the configured devices (e.g. sensors, actuator) to become operational. The exception is the SAT sensor which will alarm immediately.

If one or more alarms are present and there has been no keypad activity for at least 5 minutes, the Alarms menu displays and cycles through the active alarms.

You can also navigate to the Alarms menu at any time.

Clearing Alarms

Once the alarm has been identified and the cause has been removed (e.g. replaced faulty sensor) the alarm can be cleared from the display.

To clear an alarm, perform the following:

1. Navigate to the desired alarm.
2. Press the ↵ (Enter) button. ERASE? displays.
3. Press the ↵ (Enter) button. ALARM ERASED displays.
4. Press the ⓐ (Menu Up/Exit) button to complete the action and return to the previous menu.

NOTE: If the alarm still exists after clearing it, it is redisplayed within 5 seconds.

RTU Open Controller (Factory Option)

For details on operating 48GCG*04-06 units equipped with the factory-installed RTU Open controller option, refer to the *Factory-Installed Option RTU Open Multi-Protocol Controller Controls, Start-Up, Operation and Troubleshooting* manual.

SystemVu™ Controller (Factory Option)

For details on operating 48GCG*04-06 units equipped with the factory-installed SystemVu controller option, refer to the *FC/GC Series Single Package Rooftop Units with SystemVu Controller Controls, Start-up, Operation and Troubleshooting* manual.

Controller Options

LOW AMBIENT

If the unit comes with Electro-Mechanical (EM) control, then no adjustment is necessary.

If the unit comes with SystemVu™ or RTU Open controller option, then refer to its installation control manual for details on adjusting "Cooling Lock-Out" setting and configure for the specific job requirements.

Smoke Detectors

Smoke detectors are available as factory-installed options on 48GCG models. Smoke detectors may be specified for supply air only, for return air without or with economizer, or in combination of supply air and return air. Return-air smoke detectors are arranged for vertical return configurations only. All components necessary for operation are factory-provided and mounted. The unit is factory-configured for immediate smoke detector shutdown operation; additional wiring or modifications to unit control board

may be necessary to complete the unit and smoke detector configuration to meet project requirements.

Units equipped with factory-optional return-air smoke detectors require a relocation of the sensor module at unit installation. See Fig. 59 for the as-shipped location.

Completing Return Air Smoke Sensor Installation

1. Unscrew the two screws holding the return air smoke detector assembly. See Fig. 60, Step 1. Save the screws.
2. Turn the assembly 90 degrees and then rotate end to end. Make sure that the elbow fitting is pointing down. See Fig. 60, Step 2.
3. Screw the sensor and detector plate into its operating position using screws from Step 1. See Fig. 60, Step 3.
4. Connect the flexible tube on the sampling inlet to the sampling tube on the basepan.

Additional Application Data

Refer to the application data document "Factory Installed Smoke Detectors for Small and Medium Rooftop Units 2 to 25 Tons" for discussions on additional control features of these smoke detectors including multiple unit coordination.

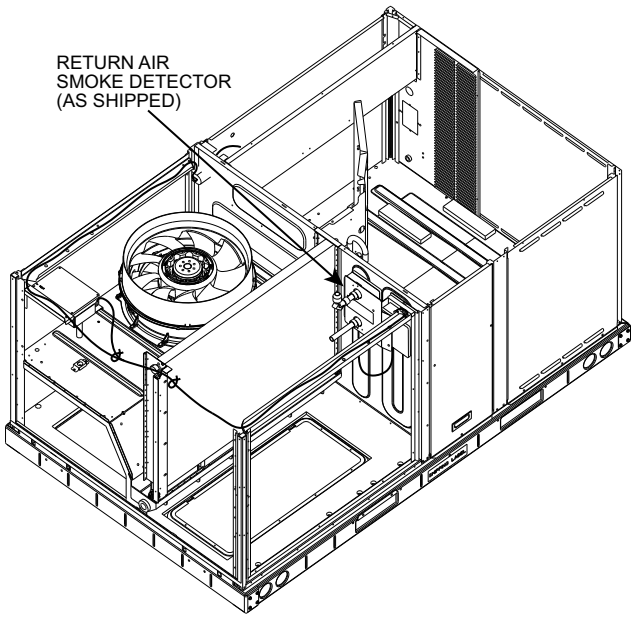

Fig. 59 — Return Air Smoke Detector, Shipping Position

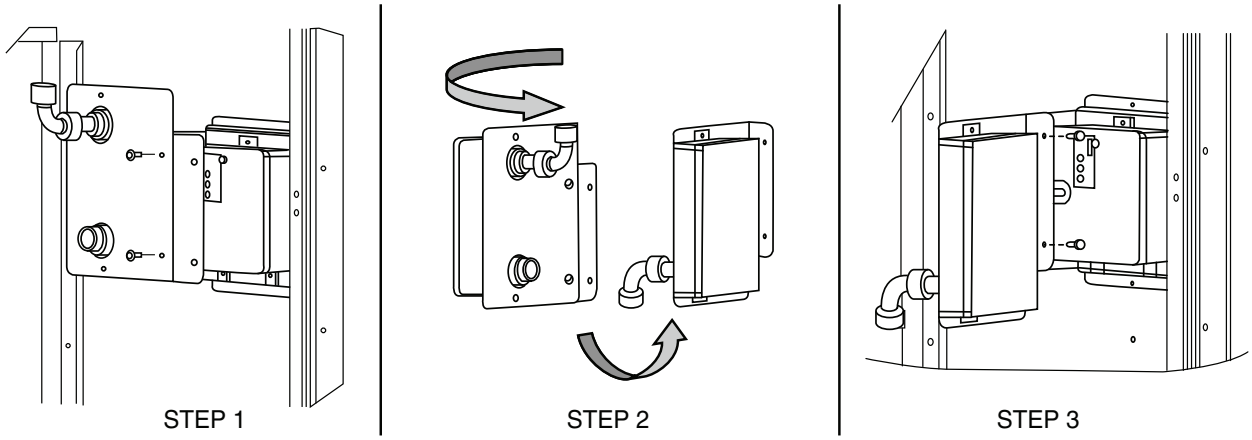

Fig. 60 — Completing Installation of Return Air Smoke Sensor

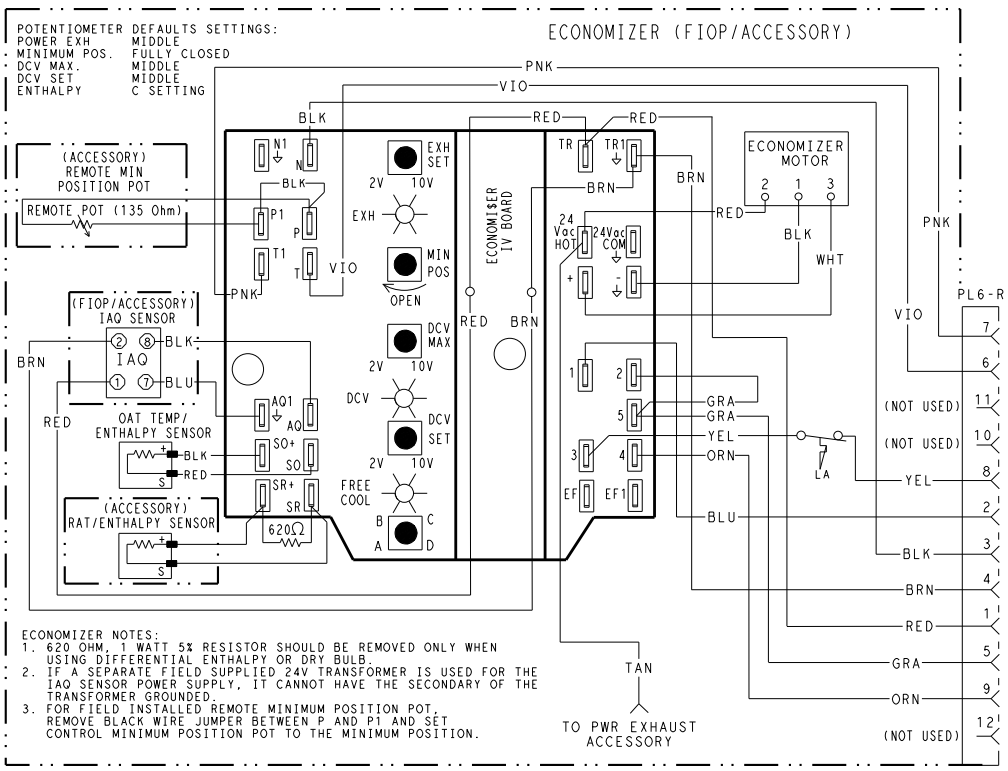

Fig. 61 — EconoMi$er IV Wiring

Step 14 — Adjust Factory-Installed Options

SMOKE DETECTORS

Smoke detector(s) will be connected at the Unit Control Board (UCB), at terminals marked "Smoke Shutdown." Detach the jumper covering the Smoke Shutdown terminals on the UCB and then attach the wiring harness from the smoke detector.

ECONOMI$ER IV OCCUPANCY SWITCH

See Fig. 61 for general EconoMi$er IV wiring. External occupancy control is managed through a connection on the Unit Control Board.

If external occupancy control is desired, connect a time clock or remotely controlled switch (closed for Occupied, open for Unoccupied sequence) at terminals marked OCCUPANCY. Detach the jumper covering the "Occupancy" terminals on the UCB and then attach the required connections.

Step 15 — Install Accessories

Available accessories include:

- Roof curb
- Thru-base connection kit (must be installed before unit is set on curb)
- LP conversion kit
- Flue discharge deflector
- Manual outside air damper
- Two-position motorized outside air damper
- EconoMi$er® IV (with control)
- EconoMi$er2 (without control/for external signal)
- Power Exhaust
- Differential dry-bulb sensor (EconoMi$er IV)
- Outdoor enthalpy sensor
- Differential enthalpy sensor
- CO_2 sensor
- Louvered hail guard
- Phase monitor control

Refer to separate installation instructions for information on installing these accessories.

Step 16 — Fan Speed Set Up

UNITS WITH ELECTRO-MECHANICAL CONTROLS

The fan speed set up controls are located on the lower section of the Unit Control Board (UCB). See Fig. 62 for location on 3 phase voltage units or Fig. 63 for location on single phase voltage units.

1. Check the job specifications for the CFM (cubic feet per minute) and ESP (external static pressure) required.
2. Using the chart on the fan speed set up labels (see Fig. 65), calculate the Vdc from the CFM and ESP for the base unit. Then add Vdc for any accessories installed per the "Field Accessories" section of the label.

NOTE: The fan speed set up labels are located on the High Voltage cover in the Control Box.

3. Connect a multimeter to the Vdc terminals on the UCB.
4. Set the Range Switch to either A, B, or C per the Switch Range table.
5. Using a straight blade screwdriver turn the Vdc control dial to fine tune the Vdc reading.
6. Record the reading in the Field Setting field.

NOTE: Fan set-up Vdc is not affected by the operating stage of the unit.

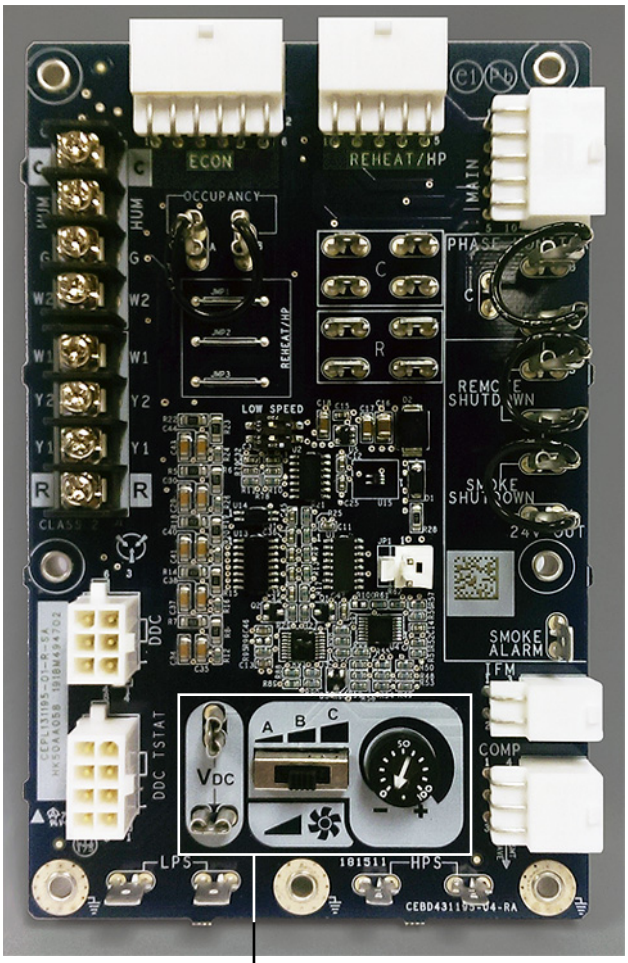

Fig. 62 — UCB Fan Speed Controls - 3-Phase Units

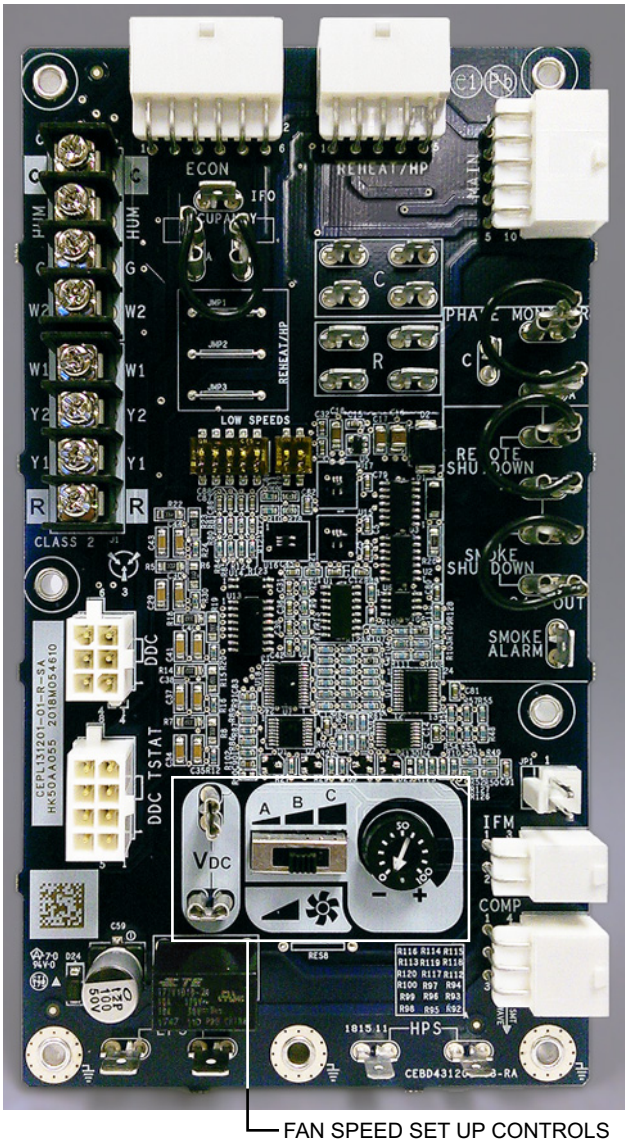

Fig. 63 — UCB Fan Speed Controls - Single Phase Units

NOTE: On single phase units, the approximate static pressure of the ductwork must be set for optimal unit efficiency. The unit is factory set for greater than 1.0 in. wg. If the external static pressure is less than 1.0 in. wg, slide switch 1 on the 5-pin DIP to the "ON" position. See Fig. 64.

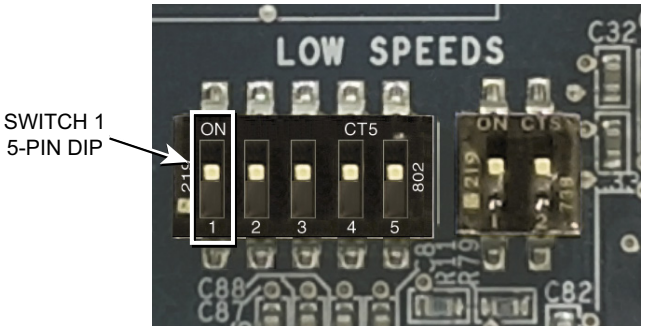

Fig. 64 — Detail – 5-Pin DIP Switch

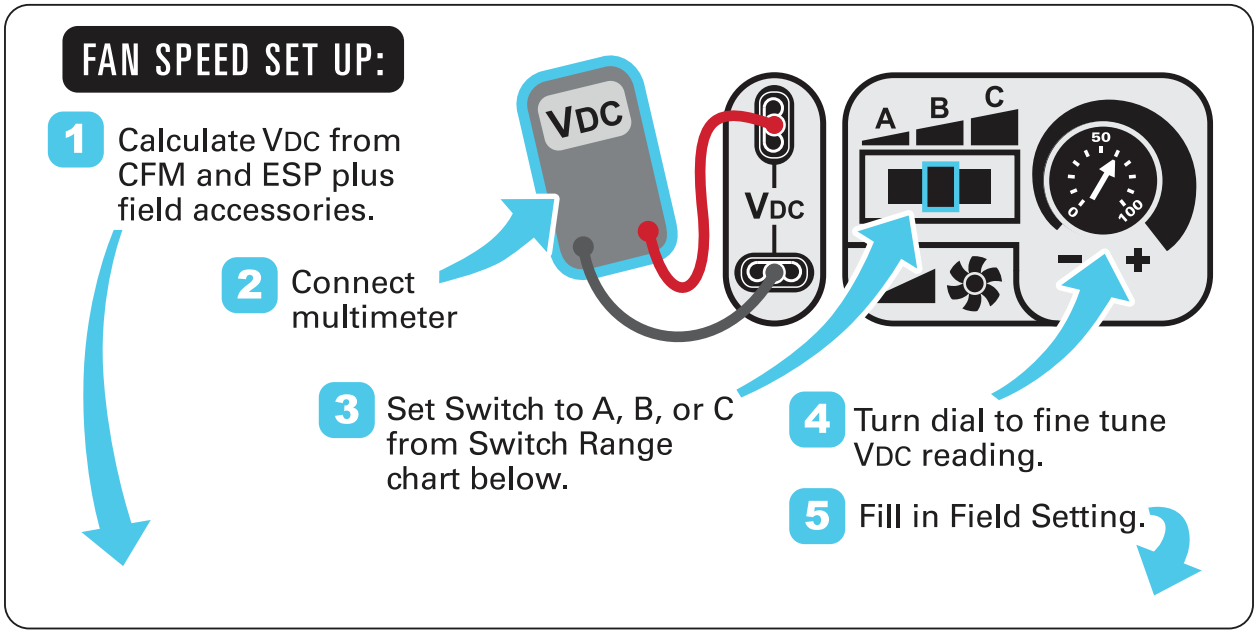

VDC Calculator

UNIT MODEL NUMBER / CFM	ESP in. wg 0.2	0.4	0.6	0.8	1.0	1.2	1.4	1.6	1.8	2.0
1500	6.0	6.7	7.4	8.0	8.5	9.0	9.5	9.9		
1625	6.3	7.1	7.7	8.3	8.8	9.3	9.7			
1750	6.7	7.4	8.0	8.6	9.1	9.5	10.0			
1875	7.1	7.7	8.3	8.9	9.4	9.8				
2000	7.5	8.1	8.7	9.2	9.7					
2125	7.9	8.4	9.0	9.5						
2250	8.3	8.8	9.4	9.9						
2375	8.7	9.2	9.7							
2500	9.1	9.5								
Field Accessories:										
Economizer	0.1	0.1	0.1	0.1	0.1	0.1	0.1	0.1		

Factory Setting: 9.0 VDC

Field Setting:

Record field setting here

_____ VDC

Switch Range: *

A	4.1 - 7.5
B	6.9 - 8.7
C	7.7 - 10.0

** Overlap in A, B, C switch range designed for maximum field adjustment potential. For example 7.2 can be set at either A or B.*

Fig. 65 — Example of Fan Speed Set Up Labels for Electro-Mechanical Controls

UNITS WITH SYSTEMVU™ CONTROLS

On units equipped with the factory-installed SystemVu controller, the fan speed settings are accessed through the SystemVu interface.

1. Check the job specifications for the CFM (cubic feet per minute) and ESP (external static pressure) required.
2. Using the chart on the Fan Speed Set Up labels (see Fig. 66), calculate the RPM from the CFM and ESP for the base unit plus any field accessories (as listed on the label).

NOTE: The fan speed set up labels are located on the High Voltage cover in the Control Box.

3. Press any key on the SystemVu interface to activate the display backlight and then press the MENU key.
4. Using the UP and DOWN arrow keys highlight SETTINGS and then press ENTER.
5. Use the DOWN arrow key highlight the UNIT CONFIGURATIONS menu then press ENTER.
6. Highlight UNIT CONFIGURATIONS then press ENTER.
7. Highlight INDOOR FAN and then press ENTER.
8. Refer to the job specifications to set the following, determining the values per the RPM Calculator label (see Fig. 66). Use the UP and DOWN arrow keys and the BACK key to set the values. Press ENTER after setting each value to continue to the next selection.

- IDF VENT SPD
- IDF HEAT SPD
- IDF LOW COOL SPD
- IDF HIGH SPD
- IDF FREE COOL SPD

For further details, see the *FC/GC Series Single Package Rooftop Units with SystemVu Controller Controls, Start-up, Operation and Troubleshooting* manual.

SystemVu™

FAN SPEED SETUP (RPM)

MAIN MENU:

SETTINGS

→ UNIT CONFIGURATIONS

→ INDOOR FAN

- → IDF VENT SPD -RPM
- → IDF HEAT SPD -RPM
- → IDF LOW COOL SPD -RPM
- → IDF HIGH COOL SPD -RPM
- → IDF FREE COOL SPD -RPM

↓ DETERMINE RPM FROM BELOW ↓

48TC003136 REV. A

RPM Calculator

UNIT MODEL NUMBER / CFM	ESP in. wg 0.2	0.4	0.6	0.8	1.0	1.2	1.4	1.6	1.8	2.0
1500	1425	1609	1764	1902	2028	2147	2260	2367		
1625	1512	1688	1839	1974	2097	2212	2322			
1750	1601	1768	1916	2047	2168	2280	2387			
1875	1692	1850	1994	2123	2241	2351				
2000	1784	1933	2073	2200	2316					
2125	1878	2018	2153	2277						
2250	1973	2104	2235	2356						
2375	2069	2192	2317							
2500	2166	2282								
Field Accessories:										
Economizer	65	65	65	65	65	65	65	65		

Fig. 66 — Example of Fan Speed Set Up Labels for SystemVu™ Controls

© 2021 Carrier

START-UP CHECKLIST FOR 48GCG 04-06 SINGLE PACKAGE ROOFTOP GAS HEATING/ELECTRIC COOLING UNIT

(Remove and use for job file)

NOTE: To avoid injury to personnel and damage to equipment or property when completing the procedures listed in this start-up checklist, use good judgment, follow safe practices, and adhere to the safety considerations/information as outlined in preceding sections of this Installation Instruction document.

I. PRELIMINARY INFORMATION

MODEL NO. _____

JOB NAME _____

SERIAL NO. _____

ADDRESS _____

START-UP DATE _____

TECHNICIAN NAME _____

ADDITIONAL ACCESSORIES

_____

II. PRE-START-UP

Verify that all packaging materials have been removed from unit	(Y/N) _____
Verify installation of outdoor air hood	(Y/N) _____
Verify installation of flue exhaust and inlet hood	(Y/N) _____
Verify that condensate connection is installed per instructions	(Y/N) _____
Verify that all electrical connections and terminals are tight	(Y/N) _____
Verify gas pressure to unit gas valve is within specified range	(Y/N) _____
Check gas piping for leaks	(Y/N) _____
Verify the gas orifice placement dimension (Ultra Low NOx models only) is as shown in the gas piping section	(Y/N) _____
Check that indoor-air filters are clean and in place	(Y/N) _____
Check that outdoor air inlet screens are in place	(Y/N) _____
Verify that unit is level	(Y/N) _____
Verify that fan assembly is free of obstructions and rotor spins freely	(Y/N) _____
Verify that scroll compressors are rotating in the correct direction	(Y/N) _____
Verify installation of thermostat	(Y/N) _____
Verify that crankcase heaters have been energized for at least 24 hours	(Y/N) _____

III. START-UP

ELECTRICAL

Supply Voltage	L1-L2_____	L2-L3_____	L3-L1_____
Compressor Amps 1	L1 _____	L2 _____	L3 _____
Compressor Amps 2	L1 _____	L2 _____	L3 _____
Supply Fan Amps	L1 _____	L2 _____	L3 _____

TEMPERATURES

Outdoor-air Temperature	_____ °F DB (Dry Bulb)	
Return-air Temperature	_____ °F DB	_____ °F WB (Wet Bulb)
Cooling Supply Air Temperature	_____ °F	
Gas Heat Supply Air	_____ °F	

PRESSURES

Gas Inlet Pressure in. wg		_____	in. wg
Gas Manifold Pressure	STAGE 1	_____	in. wg
	STAGE 2	_____	in. wg
Refrigerant Suction	CIRCUIT A	_____	PSIG
	CIRCUIT B	_____	PSIG
Refrigerant Discharge	CIRCUIT A	_____	PSIG
	CIRCUIT B	_____	PSIG

Verify Refrigerant Charge using Charging Charts (Y/N) _____

GENERAL

Economizer minimum vent and changeover settings to job requirements (if equipped) (Y/N) _____

Verify smoke detector unit shutdown by utilizing magnet test (Y/N) _____

IV. HUMIDI-MIZER® SYSTEM START-UP

STEPS

1. Check UCB (Unit Control Board) for jumper 1, 2, 3 (Jumper 1, 2, 3 must be cut and open) (Y/N) _____
2. Open humidistat contacts (Y/N) _____
3. Start unit In cooling (Close Y1) (Y/N) _____

OBSERVE AND RECORD

A. Suction pressure _____ PSIG
B. Discharge pressure _____ PSIG
C. Entering air temperature _____ °F
D. Liquid line temperature at outlet or reheat coil _____ °F
E. Confirm correct rotation for compressor (Y/N) _____
F. Check for correct ramp-up of outdoor fan motor as condenser coil warms (Y/N) _____

4. Switch unit to high-latent mode (sub-cooler) by closing humidistat with Y1 closed (Y/N) _____
5. Check unit charge per charging chart (Y/N) _____

OBSERVE

A. Reduction in suction pressure (5 to 7 psi expected) (Y/N) _____
B. Discharge pressure unchanged (Y/N) _____
C. Liquid temperature drops to 50°F to 55°F range (Y/N) _____
D. LSV solenoid energized (valve closes) (Y/N) _____

6. Switch unit to dehumid (reheat) by opening Y1 (Y/N) _____

OBSERVE

A. Suction pressure increases to normal cooling level
B. Discharge pressure decreases (35 to 50 psi) (Limited by head pressure control)
C. Liquid temperature returns to normal cooling level
D. LSV solenoid energized (valve closes)
E. DSV solenoid energized, valve opens

7. With unit in dehumid mode close W1 compressor and outdoor fan stop; LSV and DSV solenoids de-energized (Y/N) _____
8. Open W1 restore unit to dehumid mode (Y/N) _____
9. Open humidistat input compressor and outdoor fan stop; LSV and DSV solenoids de-energized (Y/N) _____
10. Restore set points for thermostat and humidistat (Y/N) _____

CUT ALONG DOTTED LINE

CUT ALONG DOTTED LINE

© 2021 Carrier