WeatherMaker® 50FCQ*04-07 Single Package Rooftop Heat Pump with Puron® (R-410A) Refrigerant

Installation Instructions

CONTENTS

Page

SAFETY CONSIDERATIONS 1
MODEL NUMBER NOMENCLATURE AND DIMENSIONS 2
Rated Indoor Airflow 2
INSTALLATION 7
Jobsite Survey 7
Step 1 — Plan for Unit Location 7
- ROOF MOUNT

Step 2 — Plan for Sequence of Unit Installation . . . 7
- CURB-MOUNTED INSTALLATION
- PAD-MOUNTED INSTALLATION
- FRAME-MOUNTED INSTALLATION

Step 3 — Inspect Unit 7
Step 4 — Provide Unit Support 7
- ROOF CURB MOUNT
- SLAB MOUNT (HORIZONTAL UNITS ONLY)
- ALTERNATE UNIT SUPPORT (IN LIEU OF CURB OR SLAB MOUNT)

Step 5 — Field Fabricate Ductwork 9
- FOR UNITS WITH ACCESSORY ELECTRIC HEATERS

Step 6 — Rig and Place Unit 9
- POSITIONING ON CURB

Step 7 — Convert to Horizontal and Connect Ductwork (when required) 10
Step 8 — Install Outside Air Hood 11
- ECONOMIZER HOOD AND 2-POSITION DAMPER HOOD PACKAGE REMOVAL AND SETUP (FACTORY OPTION)
- ECONOMIZER AND 2-POSITION HOOD

Step 9 — Units with Hinged Panels Only 12
Step 10 — Install External Condensate Trap and Line 12
Step 11 — Make Electrical Connections 12
- FIELD POWER SUPPLY
- UNITS WITH FACTORY-INSTALLED NON-FUSED DISCONNECT
- UNITS WITHOUT FACTORY-INSTALLED NON-FUSED DISCONNECT
- ALL UNITS
- CONVENIENCE OUTLETS
- FACTORY OPTION THRU-BASE CONNECTIONS
- FIELD CONTROL WIRING
- THERMOSTAT
- UNIT WITHOUT THRU-BASE CONNECTION KIT
- HEAT ANTICIPATOR SETTINGS
- COMMERCIAL DEFROST CONTROL
- ELECTRIC HEATERS
- SINGLE POINT BOXES AND SUPPLEMENTARY FUSES
- SINGLE POINT BOXES WITHOUT FUSES
- LOW-VOLTAGE CONTROL CONNECTIONS
- CONTROL AND POWER WIRING DIAGRAMS

EconoMi$er® X (Factory Option) 31
- SYSTEM COMPONENTS
- SPECIFICATIONS
- INPUTS
- OUTPUTS
- ENVIRONMENTAL
- ECONOMIZER MODULE WIRING DETAILS
- INTERFACE OVERVIEW
- SETUP AND CONFIGURATION
- ENTHALPY SETTINGS
- TWO-SPEED FAN OPERATION
- CHECKOUT
- TROUBLESHOOTING

RTU Open Controller (Factory Option) 45
SystemVu™ Controller (Factory Option) 45
Controller Options 45
- LOW AMBIENT

Smoke Detectors 45
- COMPLETING RETURN AIR SMOKE SENSOR INSTALLATION
- ADDITIONAL APPLICATION DATA

Step 12 — Adjust Factory-Installed Options 45
- SMOKE DETECTORS
- ECONOMI$ER IV OCCUPANCY SWITCH

Step 13 — Install Accessories 45
Step 14 — Fan Speed Set Up 47
- UNITS WITH ELECTRO-MECHANICAL CONTROLS
- UNITS WITH SYSTEMVU™ CONTROLS

Typical Unit Piping 49
Pre-Start and Start-Up 50
START-UP CHECKLIST CL-1

SAFETY CONSIDERATIONS

Improper installation, adjustment, alteration, service, maintenance, or use can cause explosion, fire, electrical shock or other conditions which may cause personal injury or property damage. Consult a qualified installer, service agency, or your distributor or branch for information or assistance. The qualified installer or agency must use factory-authorized kits or accessories when modifying this product. Refer to the individual instructions packaged with the kits or accessories when installing.

Follow all safety codes. Wear safety glasses and work gloves. Use quenching cloths for brazing operations and have a fire extinguisher available. Read these instructions thoroughly and follow all warnings or cautions attached to the unit. Consult local building codes and appropriate national electrical codes (in USA, ANSI/NFPA70, National Electrical Code (NEC); in Canada, CSA C22.1) for special requirements.

It is important to recognize safety information. This is the safety-alert symbol ⚠. When you see this symbol on the unit and in instructions or manuals, be alert to the potential for personal injury.

Manufacturer reserves the right to discontinue, or change at any time, specifications or designs without notice and without incurring obligations.

Understand the signal words DANGER, WARNING, CAUTION, and NOTE. These words are used with the safety-alert symbol. DANGER identifies the most serious hazards which **will** result in severe personal injury or death. WARNING signifies hazards which **could** result in personal injury or death. CAUTION is used to identify unsafe practices, which **may** result in minor personal injury or product and property damage. NOTE is used to highlight suggestions which **will** result in enhanced installation, reliability, or operation.

⚠ WARNING

Electrical shock can cause personal injury and death. Shut off all power to this equipment during installation. There may be more than one disconnect switch. Tag all disconnect locations to alert others not to restore power until work is completed.

⚠ WARNING

UNIT OPERATION AND SAFETY HAZARD

Failure to follow this warning could cause personal injury, death and/or equipment damage.

R-410A refrigerant systems operate at higher pressures than standard R-22 systems. Do not use R-22 service equipment or components on R-410A refrigerant equipment.

⚠ WARNING

PERSONAL INJURY AND ENVIRONMENTAL HAZARD

Failure to follow this warning could cause personal injury or death.

Relieve pressure and recover all refrigerant before system repair or final unit disposal.

Wear safety glasses and gloves when handling refrigerants. Keep torches and other ignition sources away from refrigerants and oils.

⚠ CAUTION

PERSONAL INJURY HAZARD

Failure to follow this caution may result in personal injury.

Sheet metal parts may have sharp edges or burrs. Use care and wear appropriate protective clothing, safety glasses and gloves when handling parts and servicing air conditioning equipment.

MODEL NUMBER NOMENCLATURE AND DIMENSIONS

See Fig. 1 for 50FCQ model number nomenclature. See Fig. 2 (on pages 4-6) for unit dimensional drawings.

Rated Indoor Airflow

Table 1 lists the rated indoor airflow used for the AHRI efficiency rating for the units covered in this document.

Table 1 — Rated Indoor Airflow

MODEL NUMBER	RATED INDOOR AIRFLOW (CFM)
50FCQA04	1200
50FCQA05	1500
50FCQA06	2000
50FCQM07	2400

Position:	1	2	3	4	5	6	7	8	9	10	11	12	13	14	15	16	17	18
Example:	5	0	F	C	Q	A	0	4	A	2	A	5	-	0	A	0	A	0

Unit/Series/Model
50FCQ – Packaged Rooftop Heat Pump

Refrig. Systems Options
A = Standard One Stage Cooling Models (sizes 04, 05, 06)
M = Single Circuit, Two Stage Cooling (size 07 only)

Cooling Tons
04 = 3 tons
05 = 4 tons
06 = 5 tons
07 = 6 tons

Sensor Options
A = None
B = Return Air (RA) Smoke Detector
C = Supply Air (SA) Smoke Detector
D = RA + SA Smoke Detector
E = CO_2 Sensor
F = RA Smoke Detector and CO_2 Sensor
G = SA Smoke Detector and CO_2 Sensor
H = RA + SA Smoke Detector and CO_2 Sensor
J = Condensate Overflow Switch
K = Condensate Overflow Switch and RA Smoke Detector
L = Condensate Overflow Switch and RA and SA Smoke Detectors
M = Condensate Overflow Switch and SA Smoke Detector

Indoor Fan Options
1 = Direct Drive – EcoBlue – Standard Static
2 = Direct Drive – EcoBlue – Medium Static
3 = Direct Drive – EcoBlue – High Static

Coil Options – (Outdoor - Indoor - Hail Guard)
A = Al/Cu - Al/Cu
B = Precoat Al/Cu - Al/Cu
C = E-coat Al/Cu - Al/Cu
D = E-coat Al/Cu - E-coat Al/Cu
E = Cu/Cu - Al/Cu
F = Cu/Cu - Cu/Cu
M = Al/Cu - Al/Cu — Louvered Hail Guard
N = Precoat Al/Cu - Al/Cu — Louvered Hail Guard
P = E-coat Al/Cu - Al/Cu — Louvered Hail Guard
Q = E-coat Al/Cu - E-coat Al/Cu — Louvered Hail Guard
R = Cu/Cu - Al/Cu — Louvered Hail Guard
S = Cu/Cu - Cu/Cu — Louvered Hail Guard

Voltage
1 = 575/3/60
3 = 208-230/1/60
5 = 208-230/3/60
6 = 460/3/60

NOTE: The following are not available as a factory-installed options on single phase (-3 voltage code) models:
- Two-Position Damper
- Coated Coils or Cu Fin Coils
- Louvered Hail Guards
- Economizer or 2-Position Damper
- Powered 115 Volt Convenience Outlet
- Phase Monitor/Protection

Packaging & Seismic Compliance
0 = Standard
1 = LTL

Electrical Options
A = None
C = Non-Fused Disconnect (NFD)
D = Thru-The-Base Connections (TTB)
F = Non-Fused Disconnect and TTB Connections
N = Phase Monitor/Protection
Q = Phase Monitor/Protection and NFD
R = Phase Monitor/Protection and TTB Connections
T = Phase Monitor/Protection and NFD and TTB Connections

Service Options
0 = None
1 = Unpowered Convenience Outlet
2 = Powered Convenience Outlet
3 = Hinged Access Panels
4 = Hinged Access Panels and Unpowered Convenience Outlet
5 = Hinged Access Panels and Powered Convenience Outlet
6 = MERV-8 High Efficiency Filters
7 = Unpowered Convenience Outlet and MERV-8 High Efficiency Filters
8 = Powered Convenience Outlet and MERV-8 High Efficiency Filters
9 = Hinged Access Panels and MERV-8 High Efficiency Filters
A = Hinged Access Panels and Unpowered Convenience Outlet and MERV-8 High Efficiency Filters
B = Hinged Access Panels and Powered Convenience Outlet and MERV-8 High Efficiency Filters

Intake / Exhaust Options
A = None
B = Temperature Economizer w/ Barometric Relief
F = Enthalpy Economizer w/ Barometric Relief
K = Two-Position Damper
U = Temperature Ultra Low Leak Economizer w/ Barometric Relief
W = Enthalpy Ultra Low Leak Economizer w/ Barometric Relief

Base Unit Controls
0 = Electro-mechanical Controls – can be used with field-installed W7212 EconoMi$er® IV (Non-Fault Detection and Diagnostic)
2 = RTU Open Multi-Protocol Controller
3 = SystemVu™ Controls
6 = Electro-mechanical Controls – can be used with W7220 EconoMi$er X (with Fault Detection and Diagnostic)

Design Revision
- = Factory Design Revision

Fig. 1 — 50FCQ 04-07 Model Number Nomenclature (Example)

NOTES:

1. DIMENSIONS ARE IN INCHES, DIMENSIONS IN [ ] ARE IN MILLIMETERS.
2. CENTER OF GRAVITY
3. DIRECTION OF AIR FLOW
4. ALL VIEW DRAWN USING 3RD ANGLE

UNIT	J	K
50FCQ*04	33 3/8 [847]	18 5/8 [472]
50FCQ*05	33 3/8 [847]	14 7/8 [377]
50FCQ*06	41 3/8 [1051]	18 5/8 [472]
50FCQ*07	41 3/8 [1051]	18 5/8 [472]

Carrier United Technologies

THIS DOCUMENT IS THE PROPERTY OF UTC CLIMATE, CONTROLS & SECURITY AND IS DELIVERED UPON THE EXPRESS CONDITION THAT THE CONTENTS WILL NOT BE DISCLOSED OR USED WITHOUT WRITTEN CONSENT.

SUBMISSION OF THESE DRAWINGS OR DOCUMENTS DOES NOT CONSTITUTE PART PERFORMANCE OR ACCEPTANCE OF CONTRACT.

	CONNECTION SIZES
A	1 3/8" [35] DIA FIELD POWER SUPPLY HOLE
B	2" [51] DIA POWER SUPPLY KNOCKOUT
C	1 3/4" [44] DIA GAUGE ACCESS PLUG
D	7/8" [22] DIA FIELD CONTROL WIRING HOLE
E	3/4"-14 NPT CONDENSATE DRAIN
G	2 1/2 " [64] DIA POWER SUPPLY KNOCK-OUT

THRU-THE-BASE CHART
THESE HOLES REQUIRED FOR USE
CRBTMPWR008A00, 009A00

	THREADED CONDUIT SIZE	WIRE USE	REQ'D HOLE SIZES (MAX.)
W	1/2"	115V	7/8" [22.2]
X	1/2"	24V	7/8" [22.2]
Y *	3/4"	POWER	1 1/8" [28.6]
Z**	(009A00) 1/2" FPT	GAS	1 1/8" [28.6]
	FOR "THRU-THE-BASEPAN" FACTORY OPTION, FITTINGS FOR ONLY X,Y, & Z ARE PROVIDED		
*	SELECT EITHER 3/4" OR 1/2" FOR POWER, DEPENDING ON WIRE SIZE		
**	(008A00) PROVIDES 3/4" FPT THRU CURB FLANGE & FITTING.		

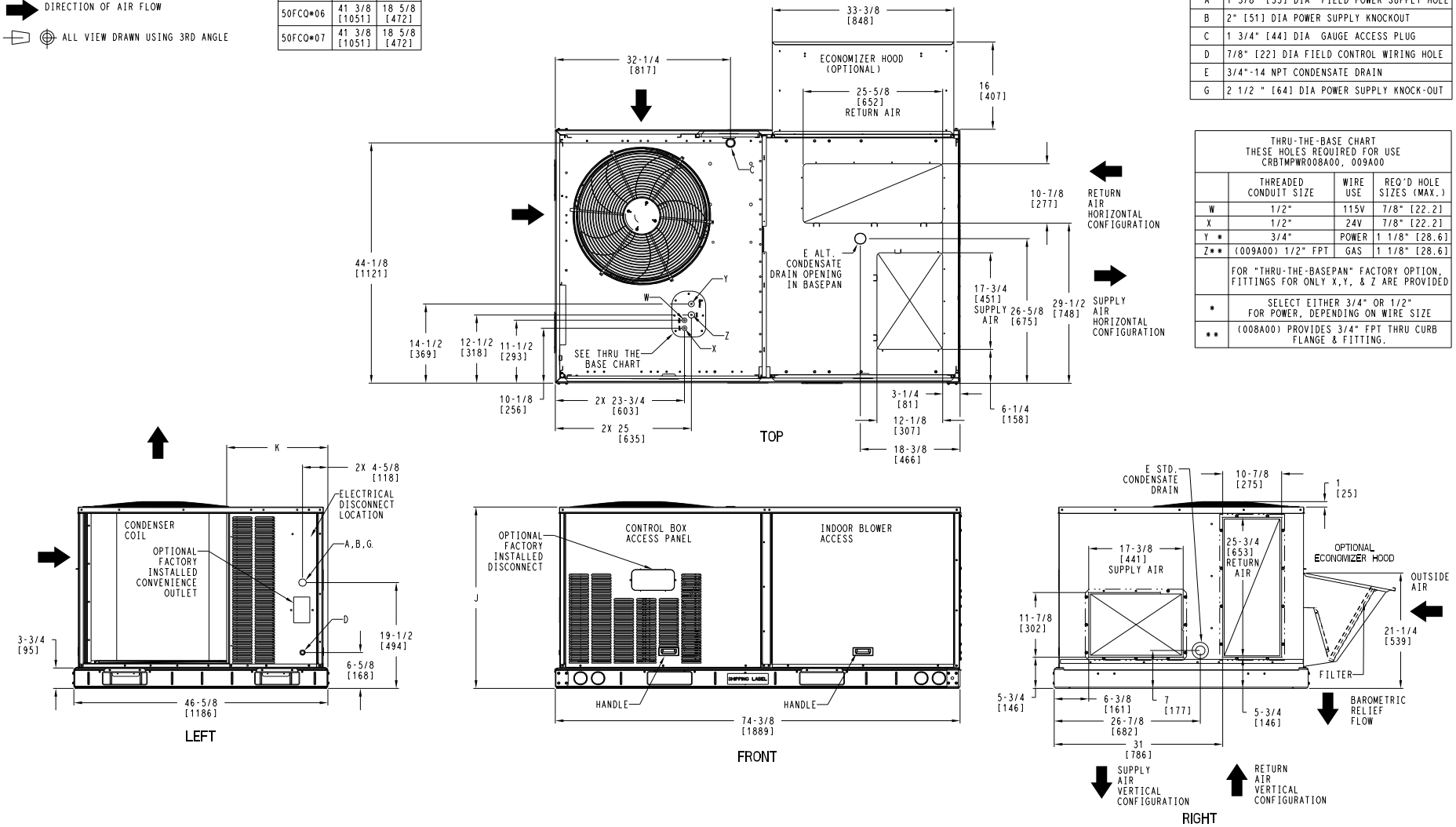

ITC CLASSIFICATION	SHEET	DATE	SUPERCEDES			REV
U.S. ECCN:NSR	1 OF 3	08/15/19	-	50FCQ 04-07 SINGLE PACKAGE HEAT PUMP	48TC003348	-

Fig. 2 — 50FCQ 04-07 Unit Dimensional Drawing

UNIT	STD. UNIT WEIGHT*		CORNER WEIGHT (A)		CORNER WEIGHT (B)		CORNER WEIGHT (C)		CORNER WEIGHT (D)		C.G.		HEIGHT
	LBS.	KG.	LBS.	KG.	LBS.	KG.	LBS.	KG.	LBS.	KG.	X	Y	Z
50FCQ*04	467	212	126	57	118	53	108	49	115	52	36 [914]	22 3/8 [568]	16 1/8 [410]
50FCQ*05	473	215	127	58	119	54	110	50	117	53	36 [914]	22 3/8 [568]	16 1/8 [410]
50FCQ*06	584	265	160	72	145	66	133	60	146	66	35 3/8 [898]	22 5/16 [557]	16 1/2 [419]
50FCQ*07	589	267	161	73	146	66	134	61	147	67	35 3/8 [898]	22 5/16 [557]	16 1/2 [419]

* STANDARD UNIT WEIGHT IS WITHOUT ELECTRIC HEAT AND WITHOUT PACKAGING.
FOR OTHER OPTIONS AND ACCESSORIES, REFER TO THE PRODUCT DATA CATALOG.

Carrier United Technologies
THIS DOCUMENT IS THE PROPERTY OF UTC CLIMATE, CONTROLS & SECURITY AND IS DELIVERED UPON THE EXPRESS CONDITION THAT THE CONTENTS WILL NOT BE DISCLOSED OR USED WITHOUT WRITTEN CONSENT.
SUBMISSION OF THESE DRAWINGS OR DOCUMENTS DOES NOT CONSTITUTE PART PERFORMANCE OR ACCEPTANCE OF CONTRACT.

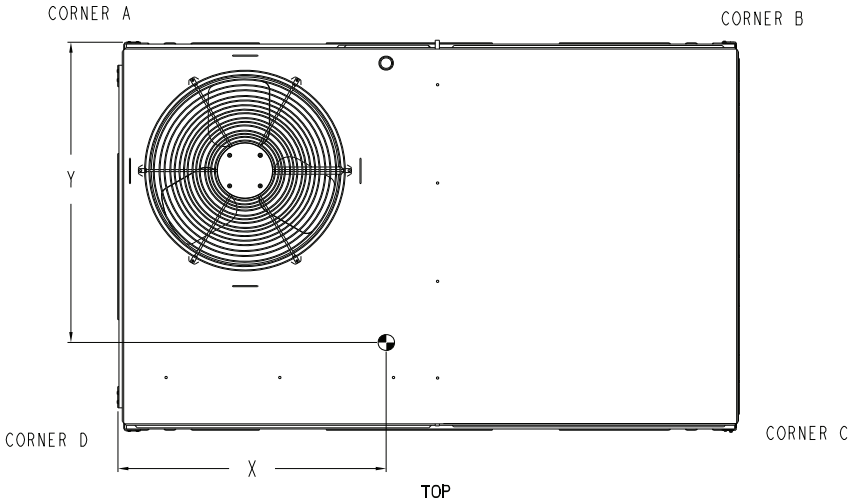

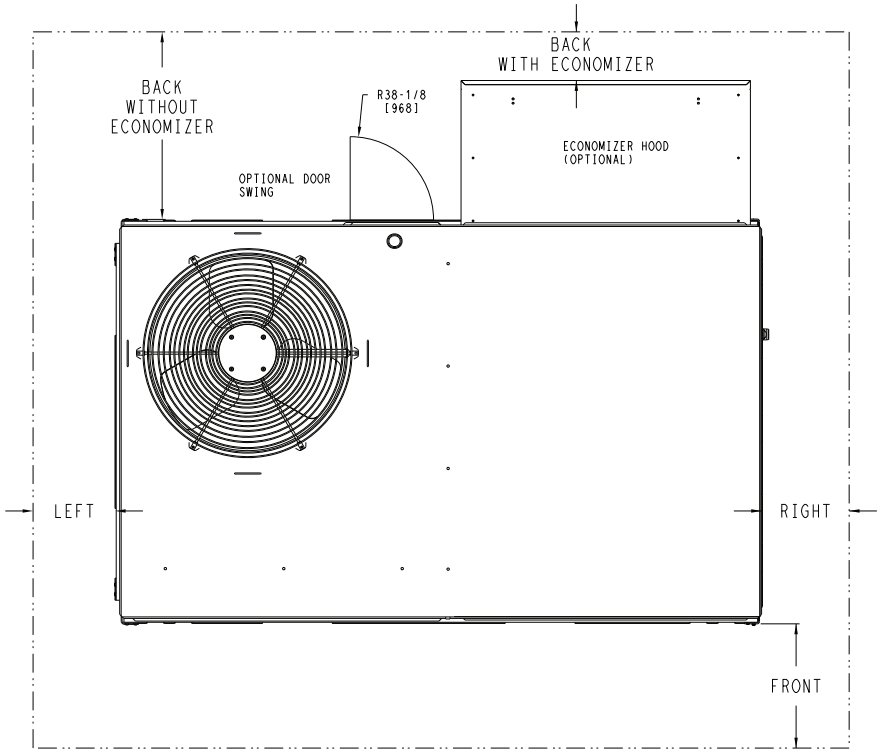

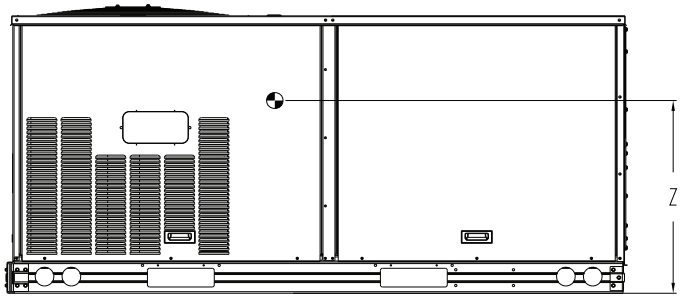

NOTE:

1. FOR ALL MINIMUM CLEARANCES LOCAL CODES OR JURISDICTIONS MAY PREVAIL.

CLEARANCE			
	SERVICE WITH:	SERVICE WITH:	OPERATING
SURFACE	CONDUCTIVE BARRIER	NONCONDUCTIVE BARRIER	CLEARANCE
FRONT	48 [1219mm]	36 [914mm]	18 [457mm]
LEFT	48 [1219mm]	42 [1067mm]	18 [457mm]
BACK W/O HOOD	48 [1219mm]	42 [1067mm]	18 [457mm]
BACK W/ HOOD	36 [914mm]	36 [914mm]	18 [457mm]
RIGHT	36 [914mm]	36 [914mm]	18 [457mm]
TOP	72 [1829mm]	72 [1829mm]	72 [1829mm]

ITC CLASSIFICATION	SHEET	DATE	SUPERCEDES			REV
U.S. ECCN:NSR	2 OF 3	08/15/19	-	50FCQ 04-07 SINGLE PACKAGE HEAT PUMP	48TC003348	-

Fig. 2 — 50FCQ 04-07 Unit Dimensional Drawing (cont)

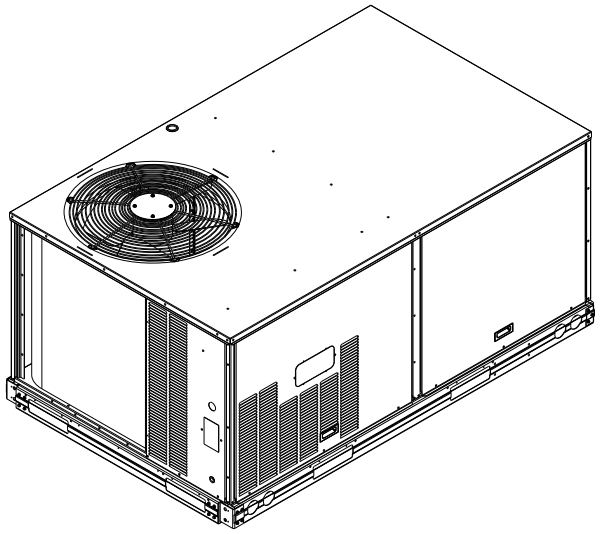

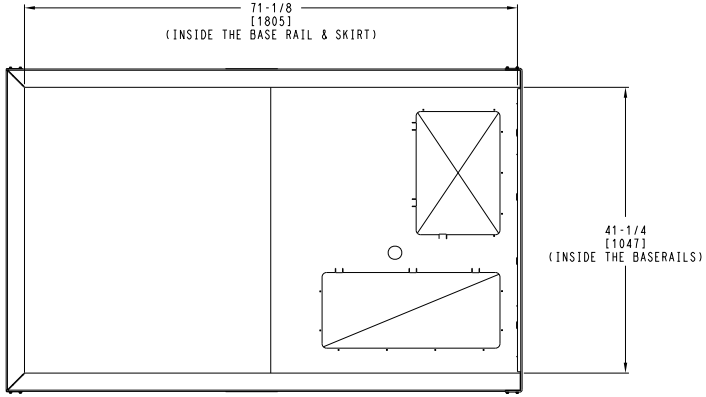

INSIDE BASERAIL DIMENSIONS

BOTTOM

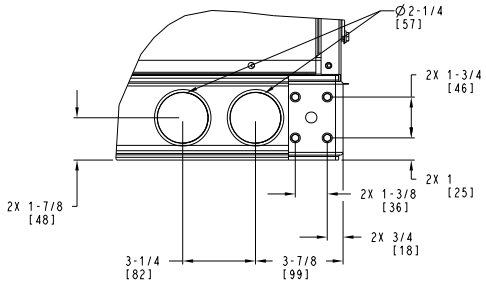

DETAIL C
TYP 4 PLCS

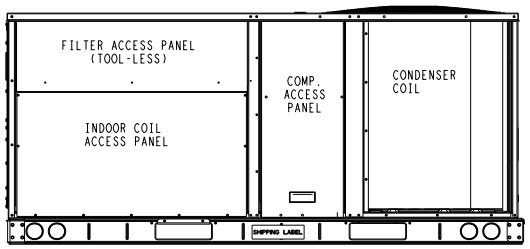

BACK

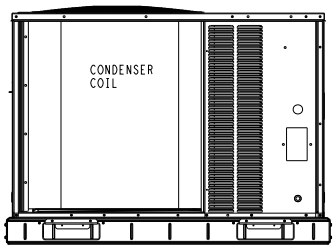

LEFT

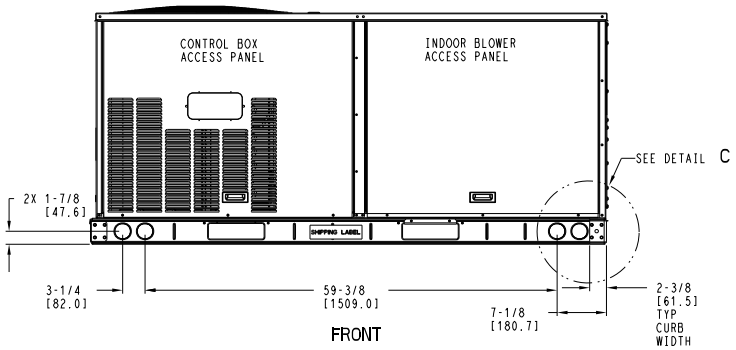

FRONT

ITC CLASSIFICATION	SHEET	DATE	SUPERCEDES			REV
U.S. ECCN:NSR	3 OF 3	08/15/19	-	50FCQ 04-07 SINGLE PACKAGE HEAT PUMP	48TC003348	-

Fig. 2 — 50FCQ 04-07 Unit Dimensional Drawing (cont)

INSTALLATION

Jobsite Survey

Complete the following checks before installation.

1. Consult local building codes and the NEC (National Electrical Code) ANSI/NFPA 70 for special installation requirements.
2. Determine unit location (from project plans) or select unit location.
3. Check for possible overhead obstructions which may interfere with unit lifting or rigging.

Step 1 — Plan for Unit Location

Select a location for the unit and its support system (curb or other) that provides for minimum clearances required for safety (including clearance to combustible surfaces), unit performance and service access below, around and above unit as specified in unit drawings. See Fig. 2 on page 5.

NOTE: Consider also the effect of adjacent units.

Unit may be installed directly on wood flooring or on Class A, B, or C roof-covering material when roof curb is used.

Do not install unit in an indoor location. Do not locate air inlets near exhaust vents or other sources of contaminated air.

Although unit is weatherproof, avoid locations that permit water from higher level runoff and overhangs to fall onto unit.

Select a unit mounting system that provides adequate height to allow installation of condensate trap per requirements. Refer to Step 10 — Install External Condensate Trap and Line for required trap dimensions.

ROOF MOUNT

Check building codes for weight distribution requirements. Unit operating weight is shown in Table 2.

Table 2 — Operating Weights

50FCQ*	UNIT LB (KG)			
	04	05	06	07
Base Unit	467 (212)	473 (215)	584 (265)	589 (267)
Economizer				
Vertical	50 (23)	50 (23)	50 (23)	50 (23)
Horizontal	80 (36)	80 (36)	80 (36)	80 (36)
Cu Fins	25 (11)	43 (20)	56 (25)	56 (25)
Powered Outlet	35 (16)	35 (16)	35 (16)	35 (16)
Curb				
14 in. (356 mm)	115 (52)	115 (52)	115 (52)	115 (52)
24 in. (610 mm)	197 (89)	197 (89)	197 (89)	197 (89)

Step 2 — Plan for Sequence of Unit Installation

The support method used for this unit will dictate different sequences for the steps of unit installation. For example, on curb-mounted units, some accessories must be installed on the unit before the unit is placed on the curb. Review the following for recommended sequences for installation steps.

CURB-MOUNTED INSTALLATION

1. Install curb
2. Install field-fabricated ductwork inside curb
3. Install accessory thru-base service connection package (affects curb and unit) (refer to accessory installation instructions for details)
4. Prepare bottom condensate drain connection to suit planned condensate line routing (refer to Step 10 for details)
5. Rig and place unit
6. Install outdoor air hood
7. Install condensate line trap and piping
8. Make electrical connections
9. Install other accessories

PAD-MOUNTED INSTALLATION

1. Prepare pad and unit supports
2. Check and tighten the bottom condensate drain connection plug
3. Rig and place unit
4. Convert unit to side duct connection arrangement
5. Install field-fabricated ductwork at unit duct openings
6. Install outdoor air hood
7. Install condensate line trap and piping
8. Make electrical connections
9. Install other accessories

FRAME-MOUNTED INSTALLATION

Frame-mounted applications generally follow the sequence for a curb installation. Adapt as required to suit specific installation plan.

Step 3 — Inspect Unit

Inspect unit for transportation damage. File any claim with transportation agency.

Confirm before installation of unit that voltage, amperage and circuit protection requirements listed on unit data plate agree with power supply provided.

On units with hinged panel option, check to be sure all latches are snug and in closed position.

Locate the carton containing the outside air hood parts. Do not remove carton until unit has been rigged and located in final position.

Step 4 — Provide Unit Support

ROOF CURB MOUNT

Accessory roof curb details and dimensions are shown in Fig. 3 (on page 8). Assemble and install accessory roof curb in accordance with instructions shipped with the curb.

Curb should be level. This is necessary for unit drain to function properly. Unit leveling tolerances are shown in Fig. 4 (on page 9). Refer to Accessory Roof Curb Installation Instructions for additional information as required.

Install insulation, cant strips, roofing felt, and counter flashing as shown. *Ductwork must be attached to curb and not to the unit. The accessory thru-the-base power and gas connection package must be installed before the unit is set on the roof curb.*

If electric and control wiring is to be routed through the basepan, attach the accessory thru-the-base service connections to the basepan in accordance with the accessory installation instructions.

NOTE: The gasketing of the unit to the roof curb is critical for a watertight seal. Install gasket supplied with the roof curb as shown in Fig. 3. Improperly applied gasket can also result in air leaks and poor unit performance.

ROOF CURB ACCESSORY #	A
CRRFCURB001A01	14" [356]
CRRFCURB002A01	24" [610]

NOTES:
1. ROOFCURB ACCESSORY IS SHIPPED DISASSEMBLED.
2. INSULATED PANELS: 25.4 [1"] THK. POLYURETHANE FOAM, 44.5 [1-3/4] # DENSITY.
3. DIMENSIONS IN [ ] ARE IN MILLIMETERS.
4. ROOFCURB: 18 GAGE STEEL.
5. ATTACH DUCTWORK TO CURB. (FLANGES OF DUCT REST ON CURB).
6. SERVICE CLEARANCE 4 FEET ON EACH SIDE.
7. ▨ DIRECTION OF AIR FLOW.
8. CONNECTOR PACKAGE CRBTMPWR001A01 IS FOR THRU-THE-CURB GAS TYPE PACKAGE CRBTMPWR003A01 IS FOR THRU-THE-BOTTOM TYPE GAS CONNECTIONS.

CONNECTOR PKG. ACC.	GAS CONNECTION TYPE	GAS FITTING	POWER WIRING FITTING	CONTROL WIRING FITTING	ACCESSORY CONVENIENCE OUTLET WIRING CONNECTOR
CRBTMPWR001A01	THRU THE CURB	3/4" [19] NPT	3/4" [19] NPT	1/2" [12.7] NPT	1/2" [12.7] NPT
CRBTMPWR003A01	THRU THE BOTTOM	1/2" [12.7] NPT			

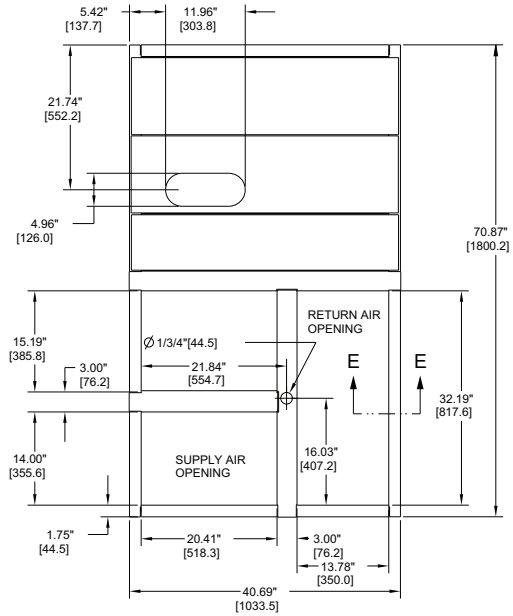

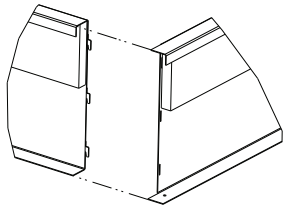

VIEW "B"
CORNER DETAIL

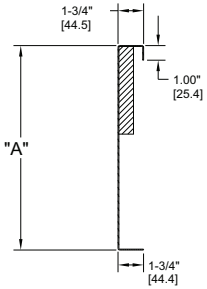

SECTION E-E
SCALE 0.250

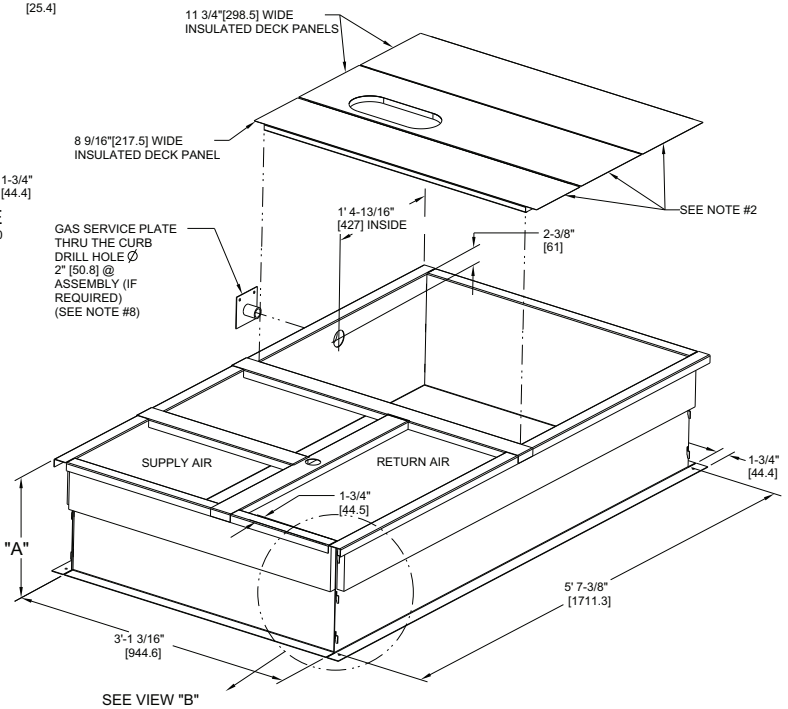

CERTIFIED DRAWING

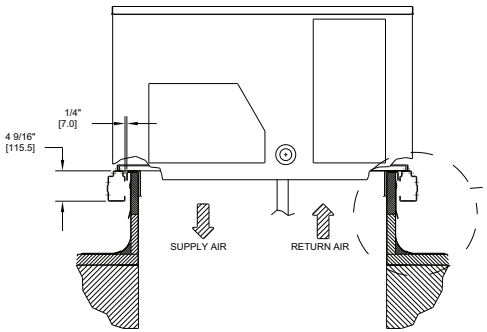

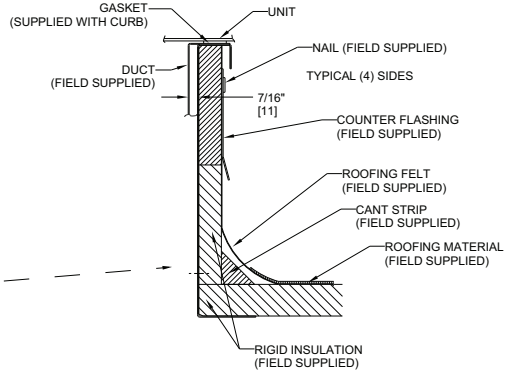

REV	REVISION RECORD	DATE	BY	CHK'D	APP'D	ECN NO.
A	OVERALL DIM. 5'-7 3/8" WAS 5'-7 7/8; 18GA MATERIAL WA 16 GA.; NAIL FIELD SUPPLIED WAS WITH CURB	04/22/13	MMC	-	-	1067898

DRAWING RELEASE LEVEL: PRODUCTION			
THIRD ANGLE PROJECTION	UNLESS OTHERWISE SPECIFIED DIMENSIONS ARE IN INCHES TOLERANCES ON: 1 DEC ± - 2 DEC ± - 3 DEC ± - ANG ± °		
MATERIAL - - -	AUTHORIZATION NUMBER 1041738	TITLE CURB ASY, ROOF	
ENGINEERING REQUIREMENTS T-005, Y-002	ENGINEERING - - MANUFACTURING - -	SIZE D	DRAWING NUMBER 48TC400427 SHEET 5 OF 5 / REV B
WEIGHT: -	DRAFTER MMC 06/17/11 CHECKER - -		
SURFACE FINISH - / MFG/PURCH PURCH	MODEL (INTERNAL USE ONLY)	NEXT DRAWING - / SCALE N/A	DISTRIBUTION MMC

Fig. 3 — Roof Curb Details

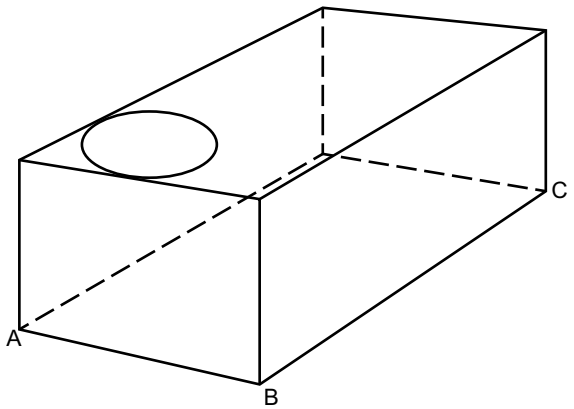

MAXIMUM ALLOWABLE DIFFERENCE IN. (MM)

A-B	B-C	A-C
0.5 (13)	1.0 (25)	1.0 (25)

Fig. 4 — Unit Leveling Tolerances

SLAB MOUNT (HORIZONTAL UNITS ONLY)

Provide a level concrete slab that extends a minimum of 6 in. (150 mm) beyond unit cabinet. Install a gravel apron in front of condenser coil air inlet to prevent grass and foliage from obstructing airflow.

NOTE: Horizontal units may be installed on a roof curb if required.

ALTERNATE UNIT SUPPORT (IN LIEU OF CURB OR SLAB MOUNT)

A non-combustible sleeper rail can be used in the unit curb support area. If sleeper rails cannot be used, support the long sides of the unit with a minimum of 3 equally spaced 4 in. x 4 in. (102 mm x 102 mm) pads on each side.

Step 5 — Field Fabricate Ductwork

Cabinet return-air static pressure (a negative condition) shall not exceed 0.35 in. wg (87 Pa) with economizer or 0.45 in. wg (112 Pa) without economizer.

For vertical ducted applications, secure all ducts to roof curb and building structure. *Do not connect ductwork to unit.*

Fabricate supply ductwork so that the cross sectional dimensions are equal to or greater than the unit supply duct opening dimensions for the first 18 in. (458 mm) of duct length from the unit basepan.

Insulate and weatherproof all external ductwork, joints, and roof openings with counter flashing and mastic in accordance with applicable codes.

Ducts passing through unconditioned spaces must be insulated and covered with a vapor barrier.

If a plenum return is used on a vertical unit, the return should be ducted through the roof deck to comply with applicable fire codes.

⚠ CAUTION

PROPERTY DAMAGE HAZARD

Failure to follow this caution may result in damage to roofing materials.

Membrane roofs can be cut by sharp sheet metal edges. Be careful when placing any sheet metal parts on such roof.

FOR UNITS WITH ACCESSORY ELECTRIC HEATERS

All installations require a minimum clearance to combustible surfaces of 1 in. (25 mm) from duct for first 12 in. (305 mm) away from unit.

Outlet grilles must not lie directly below unit discharge.

⚠ WARNING

PERSONAL INJURY HAZARD

Failure to follow this warning could cause personal injury.

For vertical supply and return units, tools or parts could drop into ductwork and cause an injury. Install a 90 degree turn in the return ductwork between the unit and the conditioned space. If a 90 degree elbow cannot be installed, then a grille of sufficient strength and density should be installed to prevent objects from falling into the conditioned space. Due to electric heater, supply duct will require 90 degree elbow.

Step 6 — Rig and Place Unit

Keep unit upright and do not drop. Spreader bars are required. Rollers may be used to move unit across a roof. Level by using unit frame as a reference. See Table 2 and Fig. 5 for additional information.

Lifting holes are provided in base rails as shown in Fig. 5. Refer to rigging instructions on unit.

Rigging materials under unit (cardboard or wood to prevent base pan damage) must be removed PRIOR to placing the unit on the roof curb.

When using the standard side drain connection, ensure the red plug in the alternate bottom connection is tight. Do this before setting the unit in place. The red drain pan can be tightened with a 1/2 in. square socket drive extension. For further details see Step 10 — Install External Condensate Trap and Line on page 12.

Before setting the unit onto the curb, recheck gasketing on curb.

⚠ CAUTION

UNIT DAMAGE HAZARD

Failure to follow this caution may result in equipment damage.

All panels must be in place when rigging. Unit is not designed for handling by fork truck when packaging is removed.

If using top crate as spreader bar, once unit is set, carefully lower wooden crate off building roof top to ground. Ensure that no people or obstructions are below prior to lowering the crate.

POSITIONING ON CURB

Position unit on roof curb so that the following clearances are maintained: 1/4 in. (6.4 mm) clearance between the roof curb and the base rail inside the front and back, 0.0 in. clearance between the roof curb and the base rail inside on the duct end of the unit. This will result in the distance between the roof curb and the base rail inside on the condenser end of the unit being approximately 1/4 in. (6.4 mm).

Although unit is weatherproof, guard against water from higher level runoff and overhangs.

After unit is in position, remove rigging skids and shipping materials.

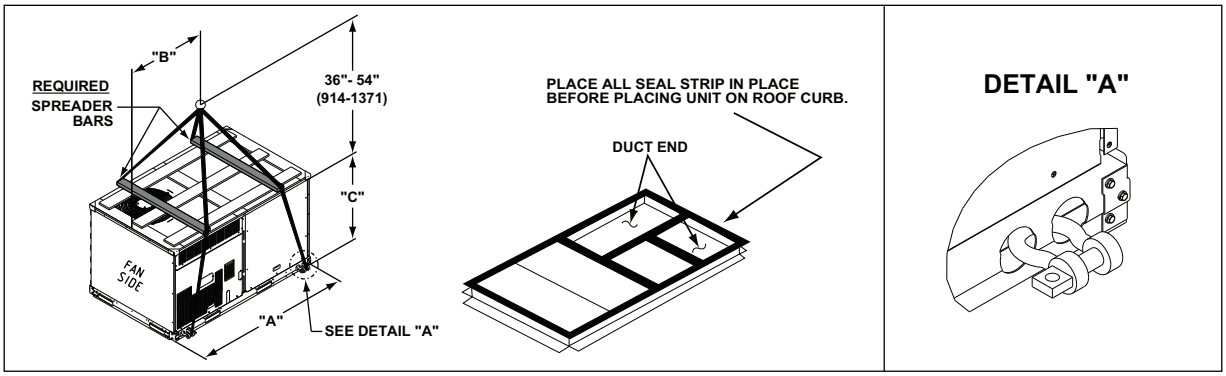

UNIT	MAX WEIGHT		DIMENSIONS					
			A		B		C	
	lb	kg	in.	mm	in.	mm	in.	mm
50FCQ*04	764	347	74.5	1890	36.0	915	33.5	850
50FCQ*05	811	368	74.5	1890	36.0	915	33.5	850
50FCQ*06	958	435	74.5	1890	35.4	899	41.5	1055
50FCQ*07	984	446	74.5	1890	35.4	899	41.5	1055

NOTES:
1. SPREADER BARS ARE REQUIRED. Top damage will occur if spreader bars are not used.
2. Dimensions in () are in millimeters.
3. Hook rigging shackles through holes in base rail, as shown in Detail A. Holes in base rails are centered around the unit center of gravity. Use wooden top to prevent rigging straps from damaging unit.

Fig. 5 — Rigging Details

Step 7 — Convert to Horizontal and Connect Ductwork (when required)

Unit is shipped in the vertical duct configuration. Unit without factory-installed economizer or return-air smoke detector option may be field-converted to horizontal ducted configuration. To convert to horizontal configuration, remove screws from side duct opening covers (see Fig. 6) and remove covers. Use the screws to install the covers on vertical duct openings with the insulation-side down. The panels must be inserted into the notches on the basepan to properly seal. The notches are covered by the tape used to secure the insulation to the basepan and are not easily seen. See Fig. 7 for position of the notches in the basepan. Seals around duct openings must be tight. Secure with screws as shown in Fig. 8. Cover seams with foil duct tape.

Field-supplied flanges should be attached to horizontal duct openings and all ductwork should be secured to the flanges. Insulate and weatherproof all external ductwork, joints, and roof or building openings with counter flashing and mastic in accordance with applicable codes.

Do not cover or obscure visibility to the unit's informative data plate when insulating horizontal ductwork.

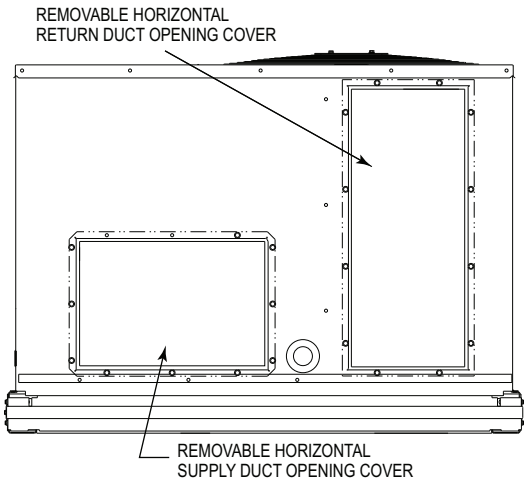

Fig. 6 — Horizontal Conversion Panels

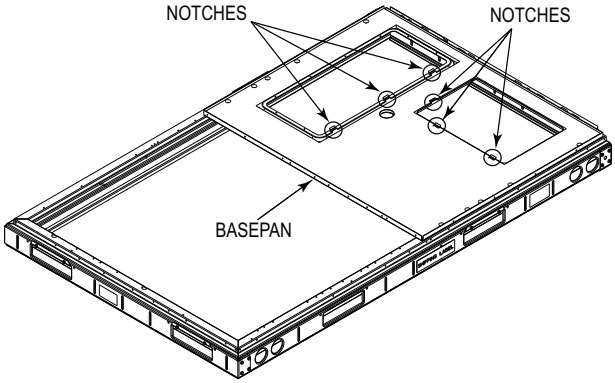

Fig. 7 — Location of Notches

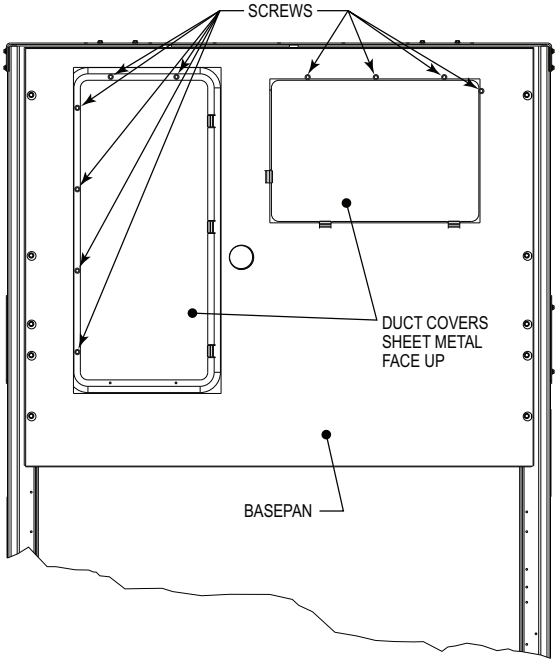

Fig. 8 — Horizontal Duct Panels In Place

Step 8 — Install Outside Air Hood

ECONOMIZER HOOD AND 2-POSITION DAMPER HOOD PACKAGE REMOVAL AND SETUP (FACTORY OPTION)

NOTE: Economizer and 2-position damper are not available as factory installed options for single phase (-3 voltage code) models. Two position damper is not available for 07 models.

The hood is shipped in knock-down form and must be field assembled. The indoor coil access panel is used as the hood top while the hood sides, divider and filter are packaged together, attached to a metal support tray using plastic stretch wrap, and shipped in the return air compartment behind the indoor coil access panel. The hood assembly's metal tray is attached to the basepan and also attached to the damper using 2 plastic tie-wraps.

1. To gain access to the hood, remove the filter access panel. (See Fig. 9.)

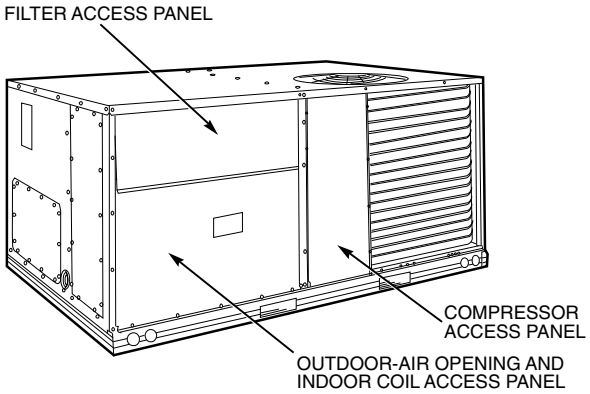

Fig. 9 — Typical Access Panel Locations

2. Locate the (2) screws holding the metal tray to the basepan and remove. Locate and cut the (2) plastic tie-wraps securing the assembly to the damper. (See Fig. 10.) Be careful to not damage any wiring or cut tie-wraps securing any wiring.

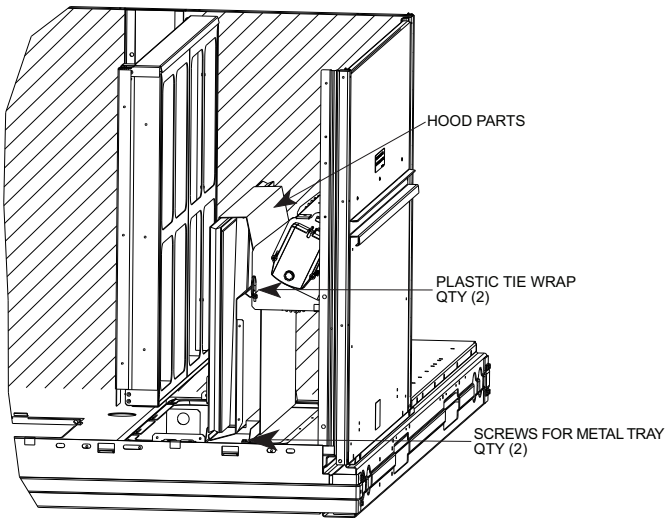

Fig. 10 — Economizer and Two-Position Damper Hood Parts Location

3. Carefully lift the hood assembly (with metal tray) through the filter access opening and assemble per the steps outlined in the following section *Economizer Hood and Two-Position Hood.*

ECONOMIZER AND 2-POSITION HOOD

NOTE: If the power exhaust accessory is to be installed on the unit, the hood shipped with the unit will not be used and must be discarded. Save the aluminum filter for use in the power exhaust hood assembly.

1. The indoor coil access panel will be used as the top of the hood. Remove the screws along the sides and bottom of the indoor coil access panel. See Fig. 11.

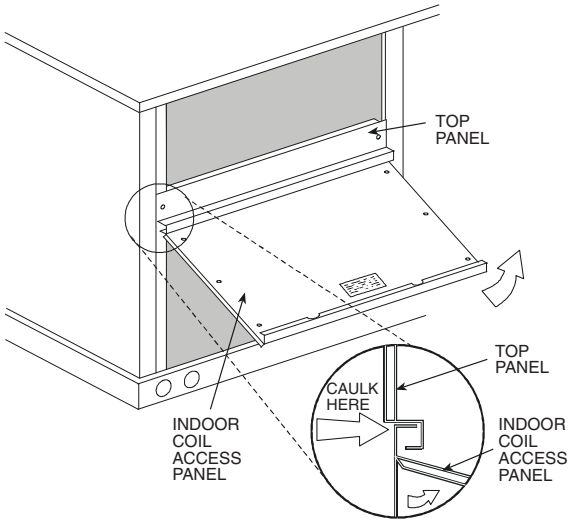

Fig. 11 — Indoor Coil Access Panel Relocation

2. Swing out indoor coil access panel and insert the hood sides under the panel (hood top). Use the screws provided to attach the hood sides to the hood top and the unit. See Fig. 12.

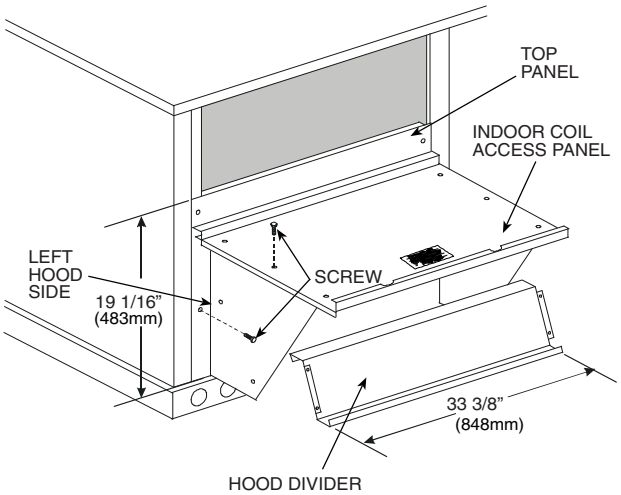

Fig. 12 — Economizer Hood Construction

3. Remove the shipping tape holding the economizer barometric relief damper in place (economizer only).
4. Insert the hood divider between the hood sides. See Fig. 12 and 13. Secure hood divider with 2 screws on each hood side. The hood divider is also used as the bottom filter rack for the aluminum filter.
5. Open the filter clips located underneath the hood top. Insert the aluminum filter into the bottom filter rack (hood divider). Push the filter into position past the open filter clips. Close the filter clips to lock the filter into place. See Fig. 13.
6. Caulk the ends of the joint between the unit top panel and the hood top.
7. Replace the filter access panel.

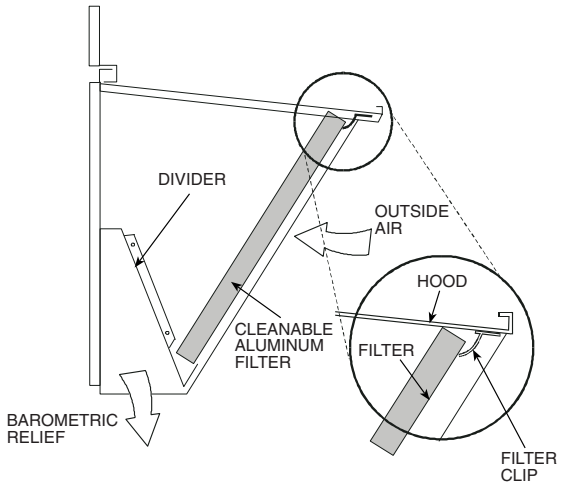

Fig. 13 — Economizer Filter Installation

Step 9 — Units with Hinged Panels Only

If the unit does not have hinged panels, skip this step and continue at Step 10 below.

Relocate latch shipped inside the compressor compartment behind the hinged compressor door to location shown in Fig. 14 after unit installation.

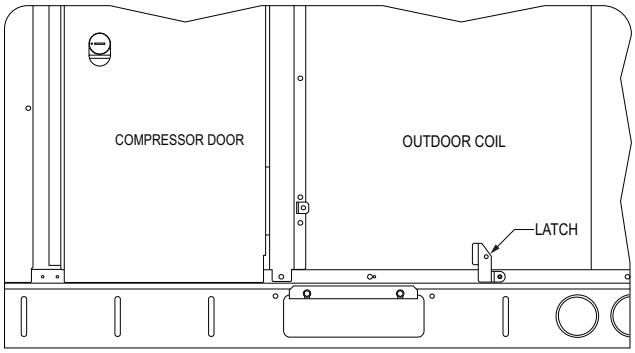

Fig. 14 — Compressor Door Latch Location

Step 10 — Install External Condensate Trap and Line

The unit has one 3/4 in. condensate drain connection on the end of the condensate pan and an alternate connection on the bottom. See Fig. 15. Unit airflow configuration does not determine which drain connection to use. Either drain connection can be used with vertical or horizontal applications.

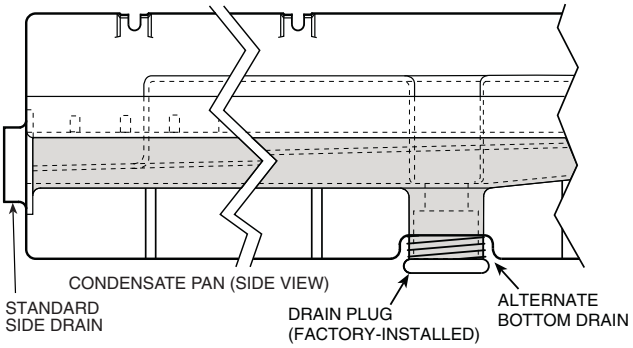

Fig. 15 — Condensate Drain Pan (Side View)

To use the alternate bottom drain connection, remove the red drain plug from the bottom connection (use a 1/2 in. square socket drive extension) and install it in the side drain connection.

The piping for the condensate drain and external trap can be completed after the unit is in place. See Fig. 16.

NOTE: If the alternate bottom drain is not used check the drain plug for tightness prior to setting the unit on the roof curb.

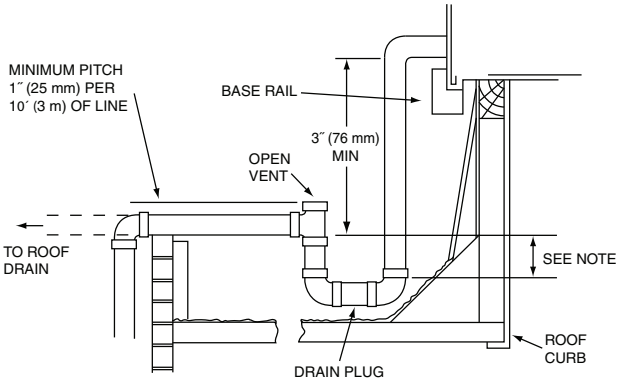

NOTE: Trap should be deep enough to offset maximum unit static difference. A 4-in. (102 mm) trap is recommended.

Fig. 16 — Condensate Drain Piping Details

All units must have an external trap for condensate drainage. Install a trap at least 4 in. (102 mm) deep and protect against freeze-up. If drain line is installed downstream from the external trap, pitch the line away from the unit at 1 in. per 10 ft (25 mm in 3 m) of run. Do not use a pipe size smaller than the unit connection (3/4 in.).

Step 11 — Make Electrical Connections

⚠ WARNING

ELECTRIC SHOCK HAZARD

Failure to follow this warning could result in personal injury or death.

Unit cabinet must have an uninterrupted, unbroken electrical ground to minimize the possibility of personal injury if an electrical fault should occur. This ground may consist of electrical wire connected to unit ground lug in control compartment, or conduit approved for electrical ground when installed in accordance with NEC; ANSI/NFPA 70, latest edition (in Canada, Canadian Electrical Code CSA [Canadian Standards Association] C22.1), and local electrical codes.

NOTE: Check all factory and field electrical connections for tightness. Field-supplied wiring shall conform with the limitations of minimum 63°F (33°C) rise.

FIELD POWER SUPPLY

If equipped with optional Powered Convenience Outlet: The power source leads to the convenience outlet's transformer primary are not factory connected. Installer must connect these leads according to required operation of the convenience outlet. If an always-energized convenience outlet operation is desired, connect the source leads to the line side of the unit-mounted disconnect. (Check with local codes to ensure this method is acceptable in your area.) If a de-energize via unit disconnect switch operation of the convenience outlet is desired, connect the source leads to the load side of the unit disconnect. On a unit without a unit-mounted disconnect, connect the source leads to compressor contactor C and indoor fan contactor IFC pressure lugs with unit field power leads.

Refer to Fig. 17 for power transformer connections and the discussion on connecting the convenience outlet on page 14.

Field power wires are connected to the unit at line-side pressure lugs on compressor contactor C and indoor fan contactor IFC (see wiring diagram label for control box component arrangement) or

at factory-installed option non-fused disconnect switch. Max wire size is #2 AWG (copper only, see Fig. 18.)

NOTE: TEST LEADS - Unit may be equipped with short leads (pigtails) on the field line connection points on contactor C or optional disconnect switch. These leads are for factory run-test purposes only; remove and discard before connecting field power wires to unit connection points. Make field power connections directly to line connection pressure lugs only.

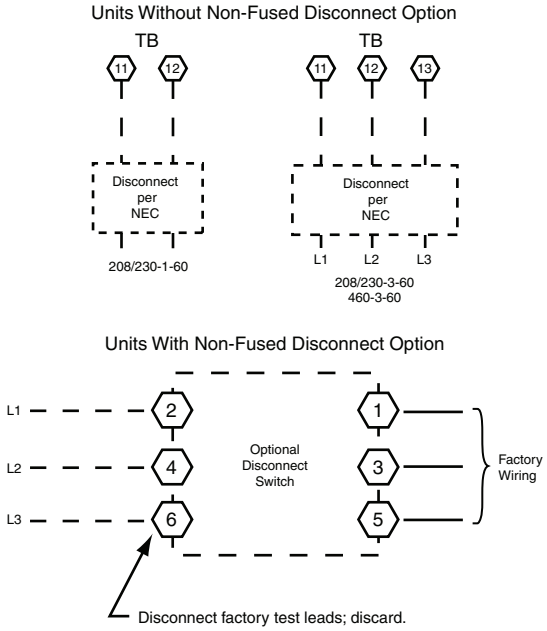

Fig. 17 — Power Wiring Connections

⚠ WARNING

FIRE HAZARD

Failure to follow this warning could result in personal injury, death, or property damage.

Do not connect aluminum wire between disconnect switch and unit. Use only copper wire.

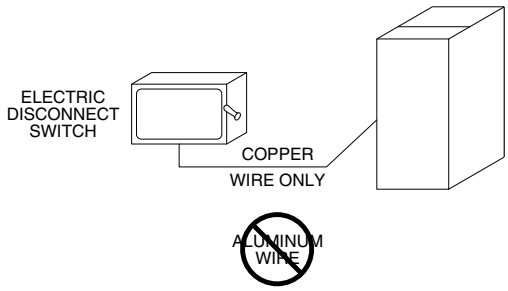

Fig. 18 — Disconnect Switch and Unit

UNITS WITH FACTORY-INSTALLED NON-FUSED DISCONNECT

The factory-installed option non-fused disconnect (NFD) switch is located in a weatherproof enclosure located under the main control box. The manual switch handle and shaft are shipped in the disconnect enclosure. Assemble the shaft and handle to the switch at this point. Discard the factory test leads (see Fig. 17).

Connect field power supply conductors to LINE side terminals when the switch enclosure cover is removed to attach the handle.

Field-Install the NFD Shaft and Handle

1. Remove the control box access panel. The NFD enclosure is located below the control box (see Fig. 19).
2. Remove (3) cap head screws that secure the NFD enclosure front cover — (2) on the face of the cover and (1) on the left side cover. See Fig. 20.
3. Remove the front cover of the NFD enclosure.
4. Make sure the NFD shipped from the factory is at OFF position (the arrow on the black handle knob is at OFF).
5. Insert the shaft with the cross pin on the top of the shaft in the horizontal position. See Fig. 20.
6. Measure from the tip of the shaft to the top surface of the black pointer; the measurement should be 3.75 to 3.88 in. (95 to 99 mm).
7. Tighten the locking screw to secure the shaft to the NFD.
8. Turn the handle to the OFF position with red arrow pointing at OFF.
9. Install the handle on to the painted cover horizontally with the red arrow pointing to the left.
10. Secure the handle to the painted cover with (2) screws and lock washers supplied.
11. Engaging the shaft into the handle socket, re-install (3) hex screws on the NFD enclosure.
12. Re-install the unit front panel.

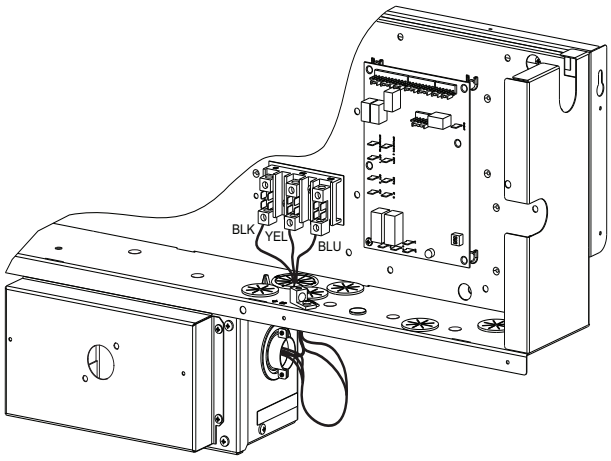

Fig. 19 — NFD Enclosure Location

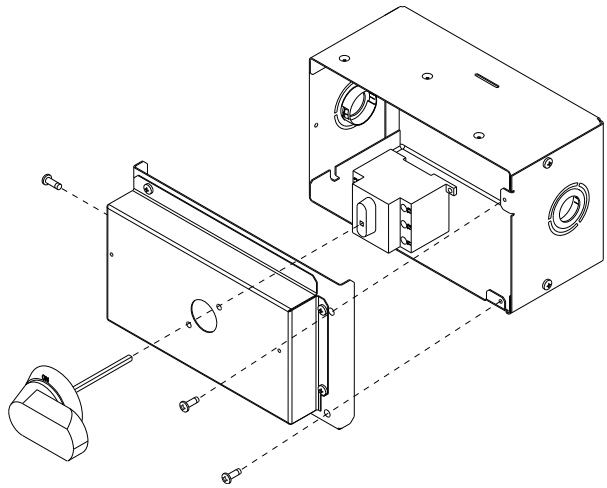

Fig. 20 — NFD Handle and Shaft Assembly

UNITS WITHOUT FACTORY-INSTALLED NON-FUSED DISCONNECT

When installing units, provide a disconnect switch per NEC (National Electrical Code) of adequate size. Disconnect sizing data is provided on the unit informative plate. Locate on unit

cabinet or within sight of the unit per national or local codes. Do not cover unit informative plate if mounting the disconnect on the unit cabinet.

ALL UNITS

All field wiring must comply with NEC and all local codes. Size wire based on MCA (Minimum Circuit Amps) on the unit informative plate. See Fig. 17 and the unit label diagram for power wiring connections to the unit power terminal blocks and equipment ground. Maximum wire size is #2 ga AWG per pole.

Provide a ground-fault and short-circuit over-current protection device (fuse or breaker) per NEC Article 440 (or local codes). Refer to unit informative data plate for MOCP (Maximum Overcurrent Protection) device size.

All field wiring must comply with the NEC and local requirements.

All units except 208/230 v units are factory wired for the voltage shown on the nameplate. If the 208/230 v unit is to be connected to a 208 v power supply, the control transformer must be rewired by moving the black wire with the 1/4 in. female spade connector from the 230 v connection and moving it to the 200 v 1/4 in. male terminal on the primary side of the transformer. Refer to unit label diagram for additional information. Field power wires will be connected line-side pressure lugs on the power terminal block or at factory-installed option non-fused disconnect.

CONVENIENCE OUTLETS

⚠ WARNING

ELECTRICAL OPERATION HAZARD

Failure to follow this warning could result in personal injury or death.

Units with convenience outlet circuits may use multiple disconnects. Check convenience outlet for power status before opening unit for service. Locate its disconnect switch, if appropriate, and open it. Lock-out and tag-out this switch, if necessary.

Two types of convenience outlets are offered on 50FC models: Non-powered and unit-powered. Both types provide a 125 volt GFCI (ground-fault circuit-interrupter) duplex receptacle rated at 15-A behind a hinged waterproof access cover, located on the end panel of the unit. See Fig. 21.

Figure 22 shows the Convenience Outlet Utilization label which is located below the convenience outlet.

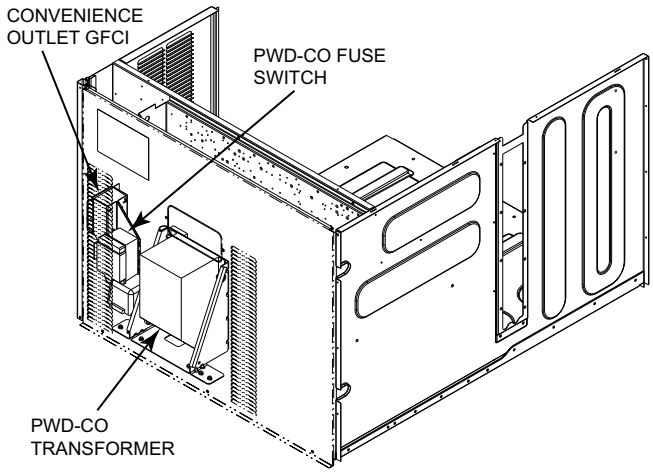

Fig. 21 — Convenience Outlet Location

NOTICE

Convenience Outlet Utilization

Maximum Continuous use: 15 Amps for receptacle outlets, and 8 Amps for factory supplied transformers

50HJ542739 C

Fig. 22 — Convenience Outlet Utilization Notice Label

NOTE: Unit powered convenience outlets are not available as factory-installed options for size 04-06 single phase (-3 voltage code) models.

Installing Weatherproof Cover

A weatherproof while-in-use cover for the factory-installed convenience outlets is now required by UL standards. This cover cannot be factory-mounted due its depth; it must be installed at unit installation. For shipment, the convenience outlet is covered with a blank cover plate.

On units with electro-mechanical controls the weatherproof cover kit is shipped in the unit's control box. The kit includes the hinged cover, a backing plate and gasket.

On units with a factory installed direct digital controller (SystemVu™ controls or RTU Open controller) the weatherproof cover kit is secured to the basepan underneath the control box. See Fig. 23.

DISCONNECT ALL POWER TO UNIT AND CONVENIENCE OUTLET. LOCK-OUT AND TAG-OUT ALL POWER.

Remove the blank cover plate at the convenience outlet; discard the blank cover.

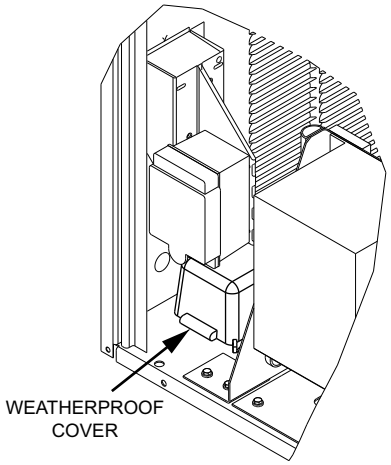

Fig. 23 — Weatherproof Cover - Shipping Location on Units with Factory Installed DDC

Loosen the 2 screws at the GFCI duplex outlet, until approximately 1/2 in. (13 mm) under screw heads are exposed. Press the gasket over the screw heads. Slip the backing plate over the screw heads at the keyhole slots and align with the gasket; tighten the 2 screws until snug (do not over-tighten).

Mount the weatherproof cover to the backing plate as shown in Fig. 24. Remove 2 slot fillers in the bottom of the cover to permit service tool cords to exit the cover. Check for full closing and latching.

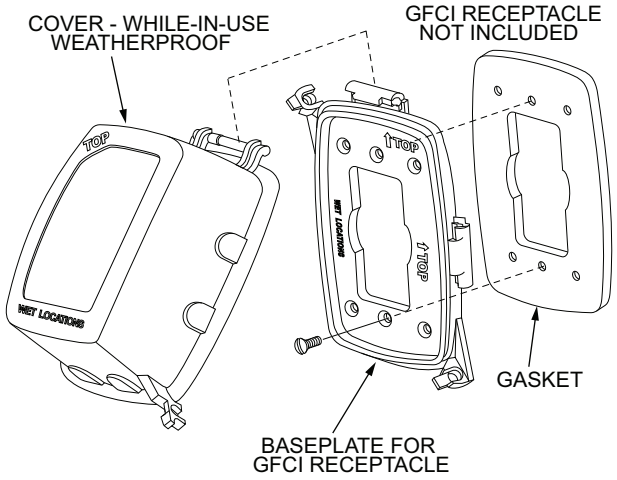

Fig. 24 — Weatherproof Cover Installation

Non-Powered Convenience Outlet

This type requires the field installation of a general-purpose 125 volt 15-A circuit powered from a source elsewhere in the building. Observe national and local codes when selecting wire size, fuse or breaker requirements and disconnect switch size and location. Route 125 v power supply conductors into the bottom of the utility box containing the duplex receptacle.

Unit-Powered Convenience Outlet

A unit-mounted transformer is factory-installed to stepdown the main power supply voltage to the unit to 115 v at the duplex receptacle. This option also includes a manual switch with fuse, located in a utility box and mounted on a bracket behind the convenience outlet; access is through the unit's control box access panel. See Fig. 21.

The primary leads to the convenience outlet transformer are not factory-connected. Selection of primary power source is a customer-option. If local codes permit, the transformer primary leads can be connected at the line-side terminals on the unit-mounted non-fused disconnect or HACR breaker switch; this will provide service power to the unit when the unit disconnect switch or HACR switch is open. Other connection methods will result in the convenience outlet circuit being de-energized when the unit disconnect or HACR switch is open. See Fig. 25.

Using Unit-Mounted Convenience Outlets

Units with unit-mounted convenience outlet circuits will often require that 2 disconnects be opened to de-energize all power to the unit. Treat all units as electrically energized until the convenience outlet power is also checked and de-energization is confirmed. Observe National Electrical Code Article 210, Branch Circuits, for use of convenience outlets.

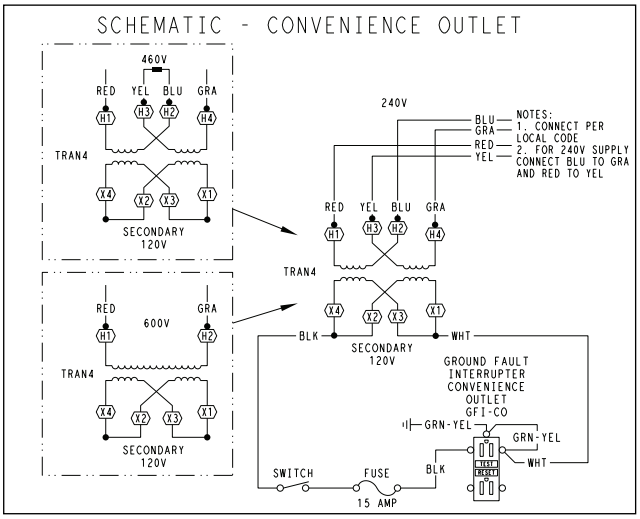

UNIT VOLTAGE	CONNECT AS	PRIMARY CONNECTIONS	TRANSFORMER TERMINALS
208, 230	240	L1: RED +YEL L2: BLU + GRA	H1 + H3 H2 + H4
460	480	L1: RED Splice BLU + YEL L2: GRA	H1 H2 + H3 H4
575	600	L1: RED L2: GRA	H1 H2

Fig. 25 — Powered Convenience Outlet Wiring

Test the GFCI receptacle by pressing the TEST button on the face of the receptacle to trip and open the receptacle. Check for proper grounding wires and power line phasing if the GFCI receptacle does not trip as required. Press the RESET button to clear the tripped condition.

Fuse On Power Type

The factory fuse is a Bussman "Fusetron"[1] T-15, non-renewable screw-in (Edison base) type plug fuse.

FACTORY OPTION THRU-BASE CONNECTIONS

This service connection kit consists of a 1/2-in. electrical bulkhead connector and a 3/4-in. electrical bulkhead connector, connected to an "L" bracket covering the embossed (raised) section of the unit basepan in the condenser section (see Fig. 26 for shipping position).

The 3/4-in. bulkhead connector enables the low-voltage control wires to pass through the basepan. The 1/2-in. bulkhead connector

1. Bussman and Fusetron are trademarks of Cooper Technologies Company.

allows the high-voltage power wires to pass through the basepan. See Fig. 27.

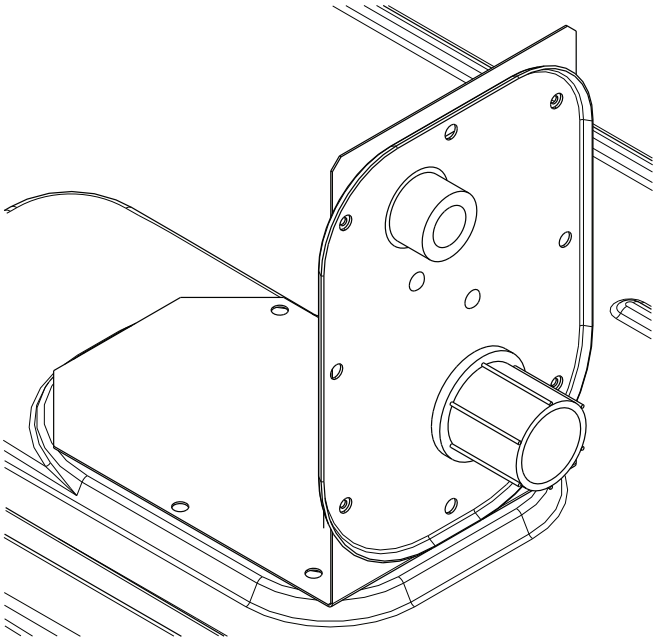

Fig. 26 — Thru-the-Base Fitting Assembly (Shown in Shipping Position)

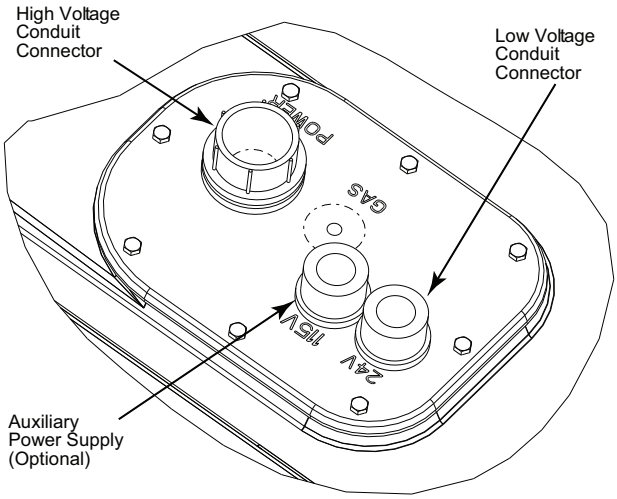

Fig. 27 — Thru-Base Connection Fittings

1. Remove the "L" bracket assembly from the unit.
2. Remove connector plate assembly from the "L" bracket and discard the "L" bracket, but retain the washer head screws and the gasket (located between the "L" bracket and the connector plate assembly).

NOTE: Take care not to damage the gasket, as it is reused in the following step.

3. Place the gasket over the embossed area in the basepan, aligning the holes in the gasket to the holes in the basepan. See Fig. 27.
4. Install the connector plate assembly to the basepan using 8 of the washer head screws.

NOTE: If electrical connections are not going to occur at this time, tape or otherwise cover the fittings so that moisture does not get into the building or conduit in the interim.

Check tightness of connector lock nuts before connecting electrical conduits.

Field-supplied and field-installed liquid-tight conduit connectors and conduit may be attached to the connectors on the basepan. Pull correctly rated high voltage and low voltage through appropriate conduits. Connect the power conduit to the internal disconnect (if unit is so equipped) or to the external disconnect (through unit side panel). Remove one of the two knockouts located on the bottom left side of the unit control box. Use this hole for the control conduit.

UNITS WITHOUT THRU-BASE CONNECTIONS

1. Install power wiring conduit through side panel openings. Install conduit between disconnect and control box.
2. Install power lines to terminal connections as shown in Fig 17.

Voltage to compressor terminals during operation must be within voltage range indicated on unit nameplate. On 3-phase units, voltages between phases must be balanced within 2% and the current within 10%. Use the formula shown below to determine the percent of voltage imbalance. Operation on improper line voltage or excessive phase imbalance constitutes abuse and may cause damage to electrical components. Such operation would invalidate any applicable Carrier warranty.

Example: Supply voltage is 230-3-60

$$\text{\% Voltage Imbalance} = 100 \times \frac{\text{max voltage deviation from average voltage}}{\text{average voltage}}$$

Example: Supply voltage is 230-3-60

AB = 224 v
BC = 231 v
AC = 226 v

$$\text{Average Voltage} = \frac{(224 + 231 + 226)}{3} = \frac{681}{3} = 227$$

Determine maximum deviation from average voltage.

(AB) 227-224 = 3 v

(BC) 231-227 = 4 v

(AC) 227-226 = 1 v

Maximum deviation is 4 v.

Determine percent of voltage imbalance.

$$\text{\% Voltage Imbalance} = 100\text{x} \frac{4}{227} = 1.78\%$$

This amount of phase imbalance is satisfactory as it is below the maximum allowable 2%.

IMPORTANT: If the supply voltage phase imbalance is more than 2%, contact your local electric utility company immediately.

FIELD CONTROL WIRING

The 50FCQ unit requires an external temperature control device. This device can be a thermostat (field-supplied) or a SystemVu™ controller (available as factory-installed option for use on a Carrier Comfort Network® or as a stand alone control) or the RTU Open Controller for Building Management Systems using non-CCN protocols (RTU Open is available as a factory-installed option only).

THERMOSTAT

Select a Carrier-approved accessory thermostat. When electric heat is installed in the 50FCQ unit, the thermostat must be capable of energizing the G terminal (to energize the Indoor Fan Contactor) whenever there is a space call for heat (energizing the W1 terminal). The accessory thermostats listed on the unit price pages can provide this signal but they are not configured to enable this signal as shipped.

Install the accessory thermostat according to installation instructions included with the accessory.

Locate the thermostat accessory on a solid wall in the conditioned space to sense average temperature in accordance with the thermostat installation instructions.

If the thermostat contains a logic circuit requiring 24 v power, use a thermostat cable or equivalent single leads of different colors with minimum of 7 leads. If the thermostat does not require a 24 v source (no "C" connection required), use a thermostat cable or equivalent with minimum of 6 leads. See Fig. 28. Check the thermostat installation instructions for additional features which might require additional conductors in the cable.

For wire runs up to 50 ft (15 m), use no. 18 AWG (American Wire Gauge) insulated wire [35°C (95°F) minimum]. For 50 to 75 ft (15 to 23 m), use no. 16 AWG insulated wire [35°C (95°F) minimum]. For over 75 ft (23 m), use no. 14 AWG insulated wire [35°C (95°F) minimum]. All wire sizes larger than no. 18 AWG cannot be directly connected to the thermostat and will require a junction box and splice at the thermostat.

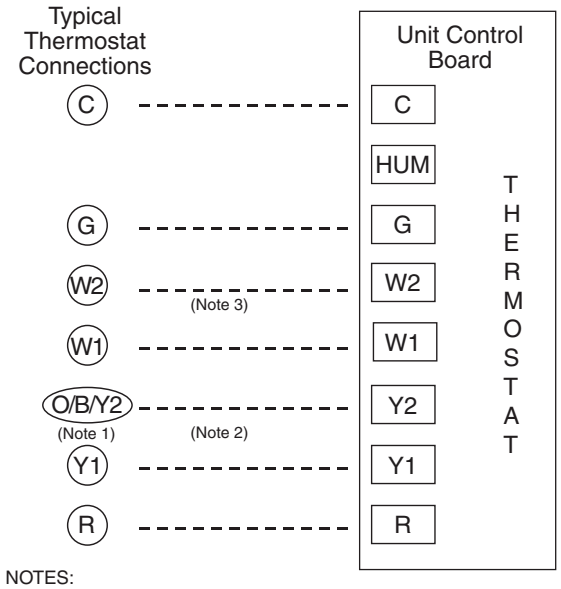

NOTES:
1. Typical multi-function marking. Follow manufacturer's configuration instructions to select Y2.
2. Y2 to Y2 connection required on single-stage cooling units when integrated economizer function is desired.
3. W2 connection not required on units with single-stage heating.

- - - Field Wiring

Fig. 28 — Typical Low-Voltage Control Connections

UNIT WITHOUT THRU-BASE CONNECTION KIT

Pass the thermostat control wires through the hole provided in the corner post; then feed the wires through the raceway built into the corner post to the control box. Pull the wires over to the terminal strip on the upper-left corner of the Unit Control Board. See Fig. 29.

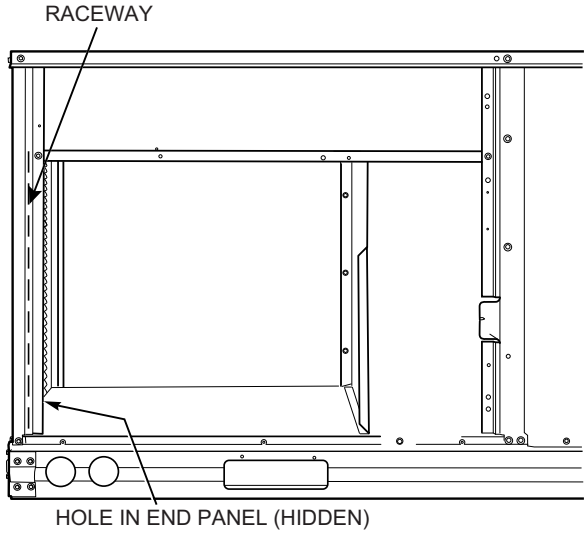

Fig. 29 — Field Control Wiring Raceway

NOTE: If thru-the-bottom connections accessory is used, refer to the accessory installation instructions for information on routing power and control wiring.

HEAT ANTICIPATOR SETTINGS

Set heat anticipator settings at 0.14 amp for the first stage and 0.14 amp for second-stage heating, when available.

COMMERCIAL DEFROST CONTROL

On 50FCQ units equipped with electro-mechanical controls or the optional factory-installed RTU Open controller the Defrost Control Board (DFB) coordinates thermostat demands for supply fan control, 1 or 2 stage cooling, 2 stage heating, emergency heating and defrost control with unit operating sequences. The DFB also provides an indoor fan off delay feature (user selectable). See Fig. 30 for board arrangement.

The DFB is located in the main control box of the 50FCQ unit (see Fig. 31). All connections are factory-made through harnesses to the UCB (unit control board) to the ECM (direct-drive motor), reversing valve solenoids and to defrost thermostats. Refer to Table 3 for details about unit functions and Table 4 for details of DFB Inputs and Outputs.

NOTE: The Defrost Control Board is not used on units equipped with the factory-installed SystemVu™ controller option.

Table 3 — Unit Function

THERMOSTAT SIGNAL	MODE	OUPUTS ENERGIZE
G	Continuous Fan	IFO, IFM
Y1	Cooling Stage 1	IFO, IFM, C1, OF, RVS1
Y1 + Y2	Cooling Stage 2	IFO, IFM, C1, OF, RVS1
W1	Heat Pump Heating	IFO, IFM, C1, C2, OF
W1 + W2	Auxiliary Heat	IFO, IFM, C1, C2, OF, EHEAT
W2	Emergency Heat	IFO, IFM, EHEAT

NOTE: 50FCQ units require the use of 2 defrost thermostats. Defrost thermostat 2 (DFT2) is considered the master to the control board. DFT1 enables the control board to appropriately switch RVS1 to the proper state. If, during a defrost cycle, DFT1 is open, RVS1 will be off. If DFT1 is closed, RVS1 will be on. Once the unit is in defrost mode, both DFT1 and DFT2 must be open in order to exit the defrost mode.

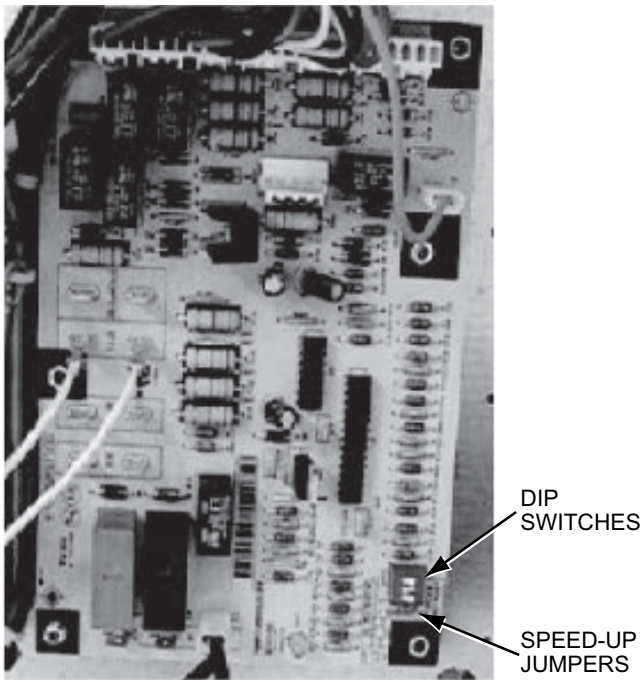

Fig. 30 — Defrost Control Board Arrangement

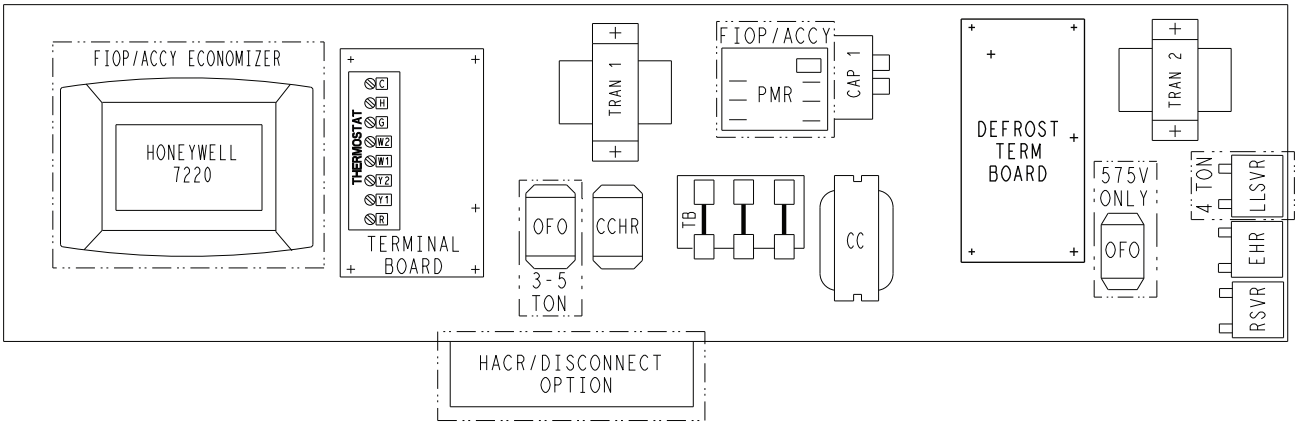

Fig. 31 — Defrost Control Board Location - 50FCQ 04-07 Electro-Mechanical Units

Table 4 — 50FCQ Defrost Board I/O and Jumper Configurations

POINT NAME	TYPE OF I/O	CONNECTION PIN NUMBER	UNIT CONNECTION	NOTE
INPUTS				
G Fan	DI, 24 vac	P2-3	CTB-G	
Y1 Cool 1	DI, 24 vac	P2-5	CTB-Y1	
Y2 Cool 2	DI, 24 vac	P2-4	CTB-Y2	
W1 Heat 1	DI, 24 vac	P2-7	CTB-W1	
W2 Heat 2	DI, 24 vac	P2-6	CTB-W2	
R Power	24 vac	P3-1	CONTL BRD-8	
C Common	24 vac	P3-2	CONTL BRD-4	
DFT 1	DI, 24 vac	DFT-1 to DFT-1	—	
DFT 2	DI, 24 vac	DFT-2 to DFT-2	—	
OUTPUTS				
IFO Fan On	DO, 24 vac	P3-9	REHEAT/HP-2	
OF OD Fan On	DO, 24 vac	OF	OFR	
RVS1	DO, 24 vac	P3-7 to P3-5	—	Energize in COOL
RVS2	DO, 24 vac	P3-6 to P3-4	—	Energize in COOL
COMP 1	DO, 24 vac	P3-10	FPT1-REHEAT/HP-6	
COMP2	DO, 24 vac	P3-8	FPT2-REHEAT/HP-8	
HEAT 2	DO, 24 vac	E-HEAT	TB4-1	
COM	24 vac	P3-3	TB4-3	
CONFIGURATION				
Select Jumper	24 vac	P1-1	—	
SPEED-UP CONFIGURATION				
Speed-Up Jumper	—	JMP17	—	
Speed-Up Jumper	—	JMP18	—	

NOTES:
1. Jumper for 1-3 seconds: Factory Test — The defrost interval timing is reduced by a factor of 0.1 seconds/minute based on the positions of DIP switches SW1 and SW2 (i.e., 90 minutes will be reduced to 9 seconds).
2. Jumper for 5-20 seconds: Forced Defrost — Defrost runs for 30 seconds if DFT2 is open.

Reversing valve control

The DFB has 2 outputs for unit reversing valve control. Operation of the reversing valves is based on internal logic; this application does not use an "O" or "B" signal to determine reversing valve position. Reversing valves are energized during the cooling stages and the defrost cycle and de-energized during heating cycles. Once energized at the start of a cooling stage, the reversing valve will remain energized until the next heating cycle demand is received. Once de-energized at the start of a Heating cycle, the reversing valves will remain de-energized until the next cooling stage is initiated.

Compressor control

The DFB receives inputs indicating Stage 1 Cooling, Stage 2 Cooling and Stage 1 Heating from the space thermostat or unit control system (SystemVu™ controller or RTU Open controller); it generates commands to start compressors with or without reversing valve operation to produce Stage 1 Cooling, Stage 2 Cooling or Stage 1 Heating.

Auxiliary (Electric) Heat control

The 50FCQ unit can be equipped with one or 2 auxiliary electric heaters, to provide a second stage of heating. The DFB will energize this Heating System for a Stage 2 Heating Command (heaters operate concurrently with compressor(s) in the Stage 1 Heating cycle), for an Emergency Heating sequence (compressors are off and only the electric heaters are energized) and also during the Defrost cycle (to eliminate a "cold blow" condition in the space).

Defrost

The defrost control mode is a time/temperature sequence. There are 2 time components: The continuous run period and the test/defrost cycle period. The temperature component is provided by Defrost Thermostat 1 and 2 (DFT1 and DFT2) mounted on the outdoor coil.

The continuous run period is a fixed time period between the end of the last defrost cycle (or start of the current Heating cycle) during which no defrost will be permitted. This period can be set at 30, 60, 90 or 120 minutes by changing the positions of DIP switches SW1 and SW2 (see Fig. 32 and Table 5). The default run period is 30 minutes.

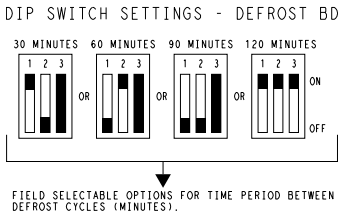

Fig. 32 — DIP Switch Settings - Defrost Board

Table 5 — DIP Switch Positions

	1	2		1	2		1	2		1	2		3	
1	•		1		•	1			1	•	•	1	•	On
0		•	0	•		0	•	•	0			0		Off
	30 minutes (factory default)			60 minutes			90 minutes			120 minutes			Fan Delay	

Shorting the jumpers for a period of 5 to 20 seconds bypasses the remaining continuous run period and places the unit in a Forced Defrost mode. If the controlling DFT is closed when this mode is initiated, the unit will complete a normal defrost period that will terminate when the controlling DFT opens or the 10 minute defrost cycle limit is reached. If the controlling DFT is open when this mode is initiated, the Defrost cycle will run for 30 seconds. Both modes end at the end of the Defrost cycle.

ELECTRIC HEATERS

The 50FCQ units may be equipped with field-installed accessory electric heaters. The heaters are modular in design, with heater frames holding open coil resistance wires strung through ceramic insulators, line-break limit switches and a control contactor.

Heater modules are installed in the compartment below the indoor (supply) fan outlet. Access is through the indoor access panel. See Fig. 33-35.

Not all available heater modules may be used in every unit. Use only those heater modules that are UL listed for use in a specific size unit. Refer to the label on the unit cabinet for the list of approved heaters.

Refer to the Small Roof Top Units Accessory Electric Heater and Single Point Box installation instructions for further details.

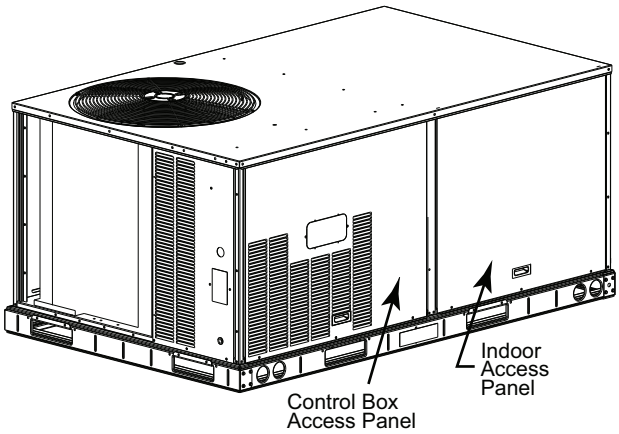

Fig. 33 — Typical Access Panel Location

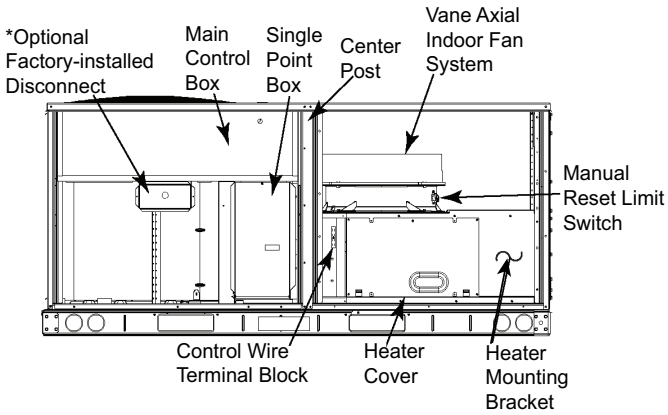

Fig. 34 — Typical Component Location

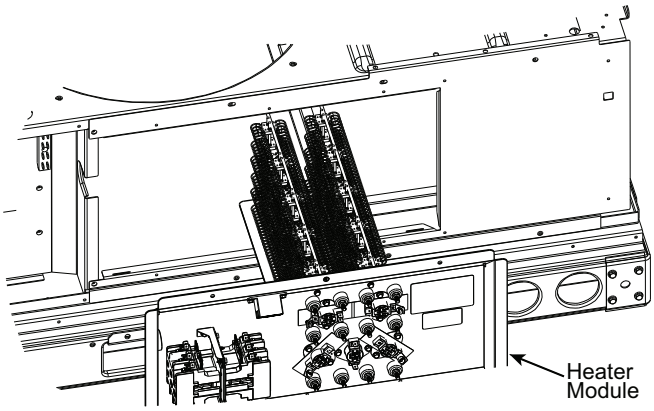

Fig. 35 — Typical Heater Module Installation

SINGLE POINT BOXES AND SUPPLEMENTARY FUSES

When the unit MOCP device value exceeds 60-A, unit-mounted supplementary fuses are required for each heater circuit. These fuses are included in accessory Single Point Boxes, with power distribution and fuse blocks. The single point box will be installed directly under the unit control box, just to the left of the partition separating the indoor section (with electric heaters) from the outdoor section. The Single Point Box has a hinged access cover. See Fig. 36. The Single Point Box also includes a set of power taps and pigtails to complete the wiring between the Single Point Box and the unit's main control box terminals. Refer to the Small Roof Top Units Accessory Electric Heater and Single Point Box installation instructions for details on tap connections.

All fuses on 50FCQ units are 60-A. (Note that all heaters are qualified for use with a 60-A fuse, regardless of actual heater ampacity, so only 60-A fuses are necessary.)

SINGLE POINT BOXES WITHOUT FUSES

Unit heater applications not requiring supplemental fuses require a special Single Point Box without any fuses. The accessory Single Point Boxes contain a set of power taps and pigtails to complete the wiring between the Single Point Box and the unit's main control box terminals. Refer to accessory heater and Single Point Box installation instructions for details on tap connections.

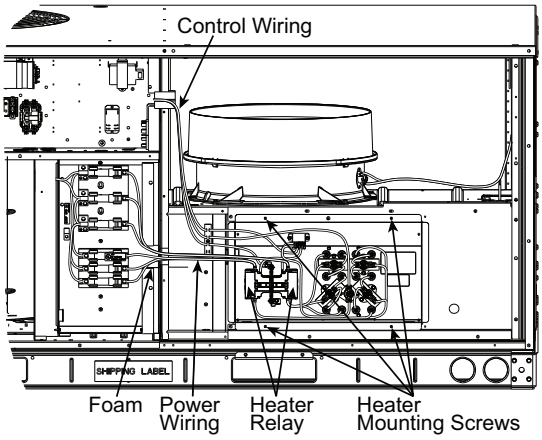

Fig. 36 — Typical Single Point Installation

LOW-VOLTAGE CONTROL CONNECTIONS

Pull the low-voltage control leads from the heater module — VIO and BRN (2 of each if a 2-circuit heater module is installed; identify for circuit #1) — to the 4-pole terminal board TB4 located on the heater bulkhead to the left of the Heater module. Connect the VIO lead from Heater circuit #1 to terminal TB4-1. For 2 stage heating, connect the VIO lead from Heater circuit #2 to terminal TB4-2. See Fig. 37.

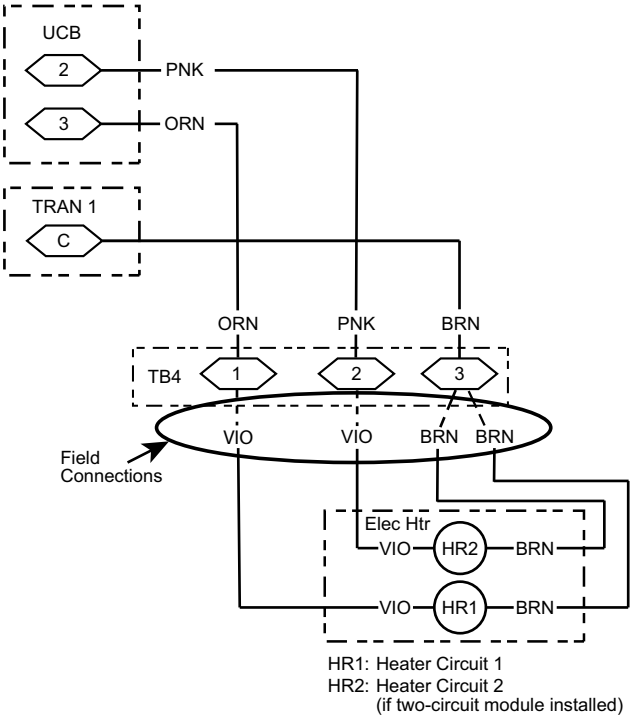

Fig. 37 — Accessory Electric Heater Control Connections

CONTROL AND POWER WIRING DIAGRAMS

Figures 38-46 are typical control and power wiring diagrams.

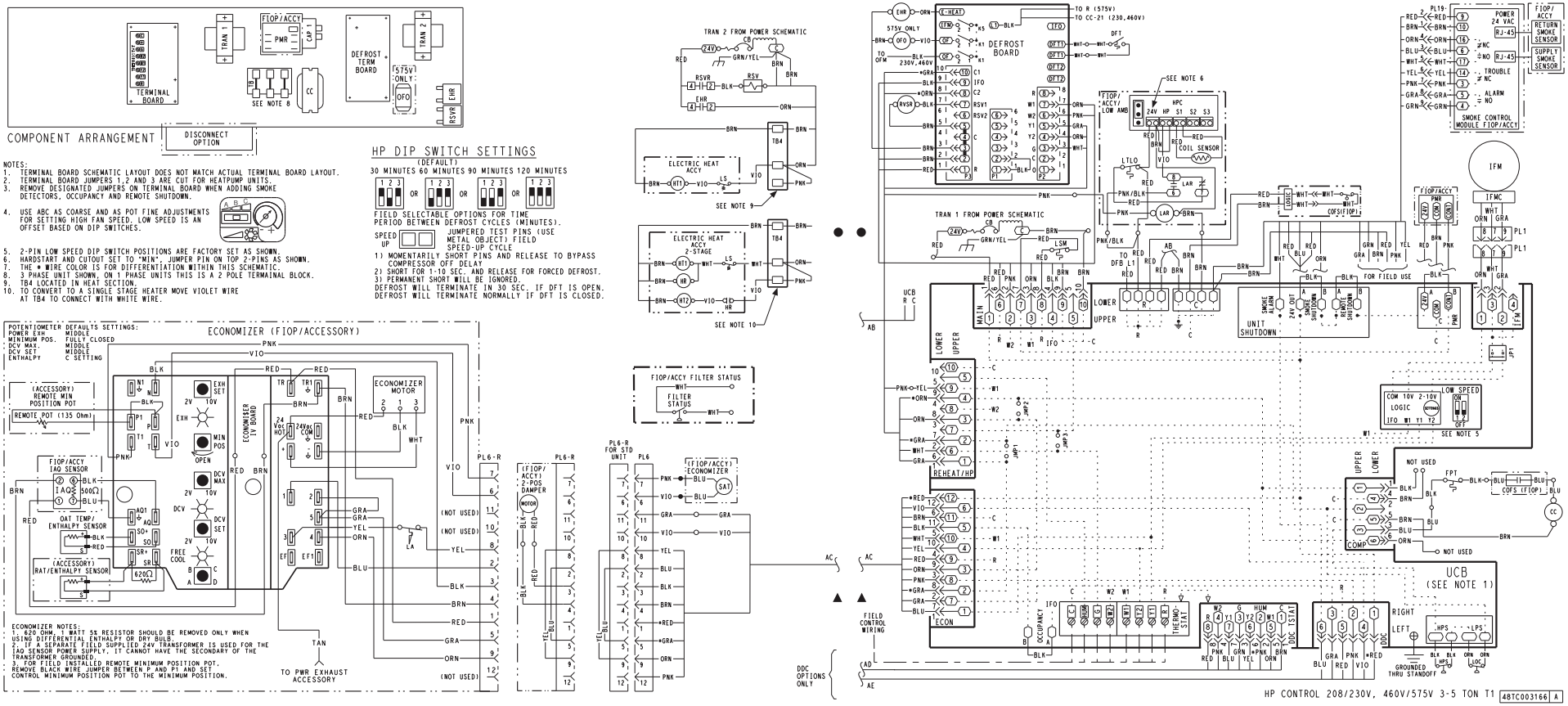

Fig. 38 — Typical Control Wiring Diagram, Electro-Mechanical with W7212 (50FCQ 04-06 208-230/3/60 Unit Shown)

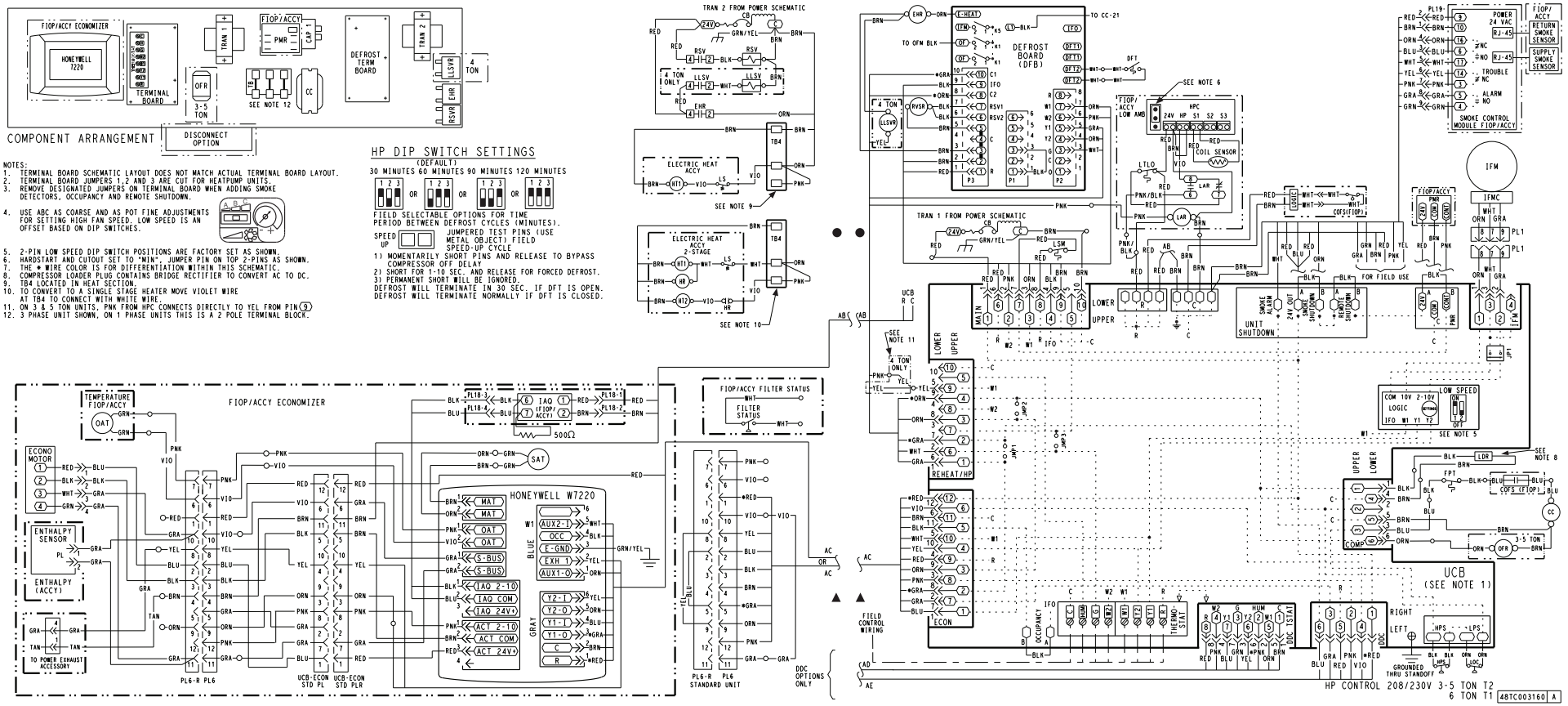

Fig. 39 — Typical Control Wiring Diagram, Electro-Mechanical with W7220 (50FCQ 07 208-230/3/60 Unit Shown)

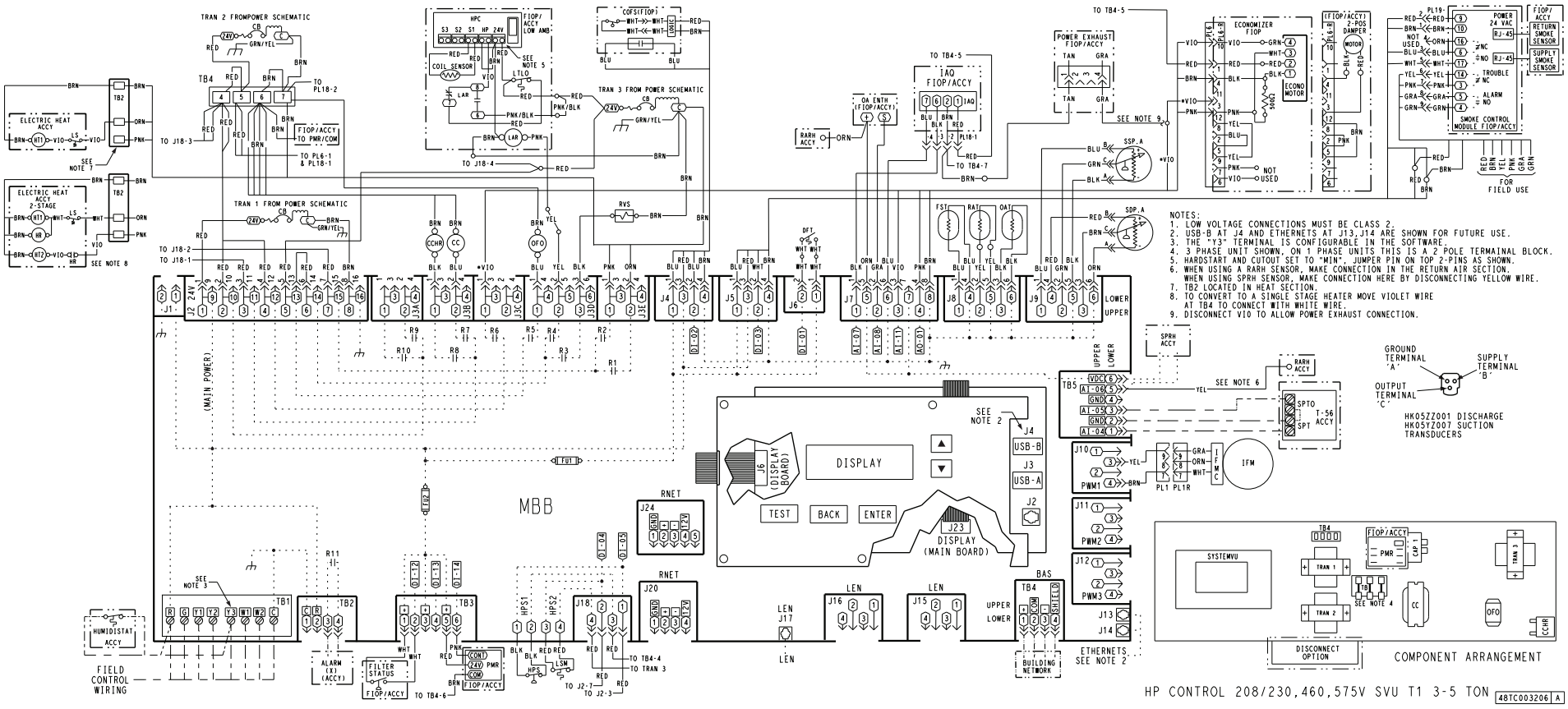

Fig. 40 — Typical Control Wiring Diagram, with SystemVu Controller (50FCQ 04-06 208-230, 460, 575/3/60 Unit Shown)

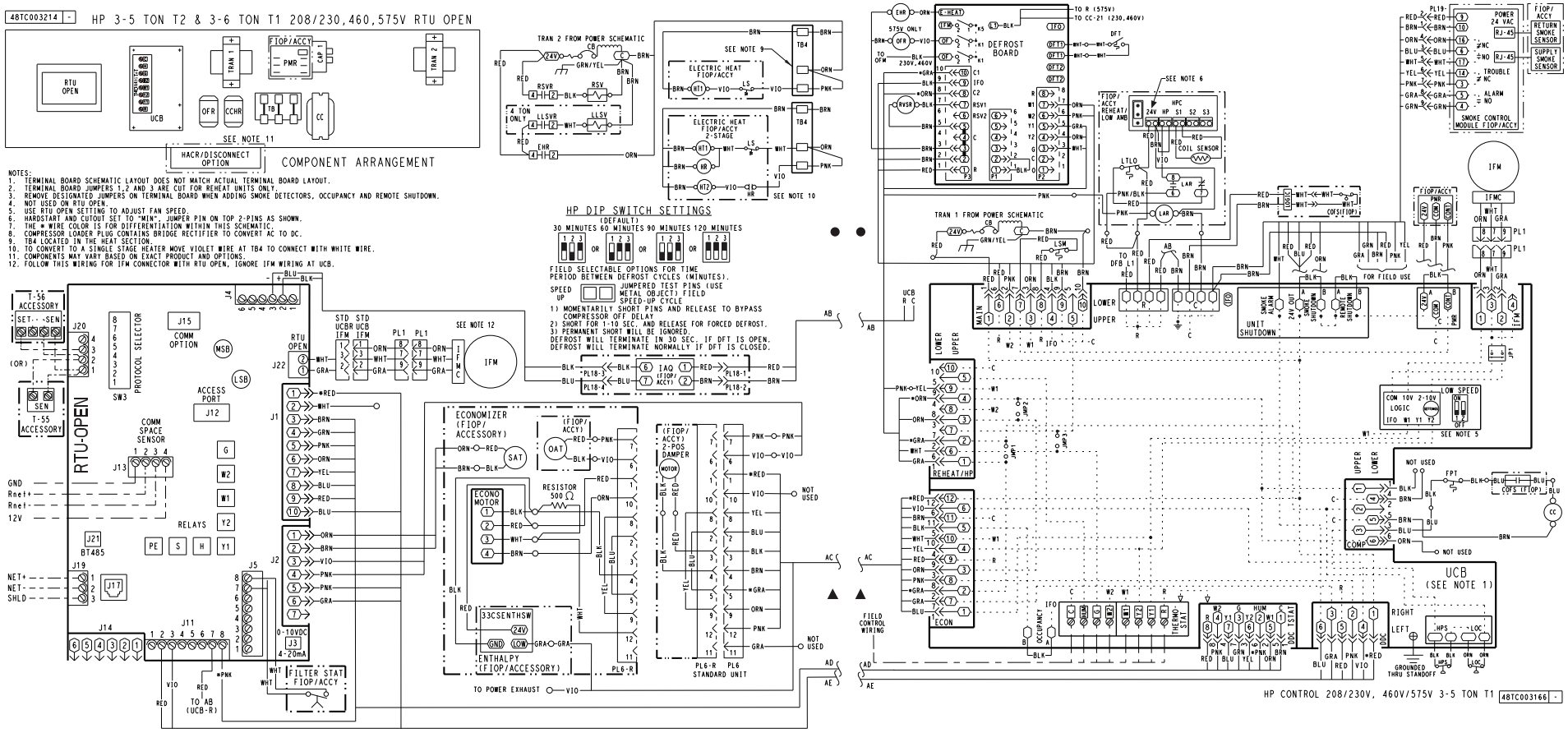

Fig. 41 — Typical Control Wiring Diagram, with RTU Open Controller (50FCQ 04-06 208-230, 460, 575/3/60 Unit Shown)

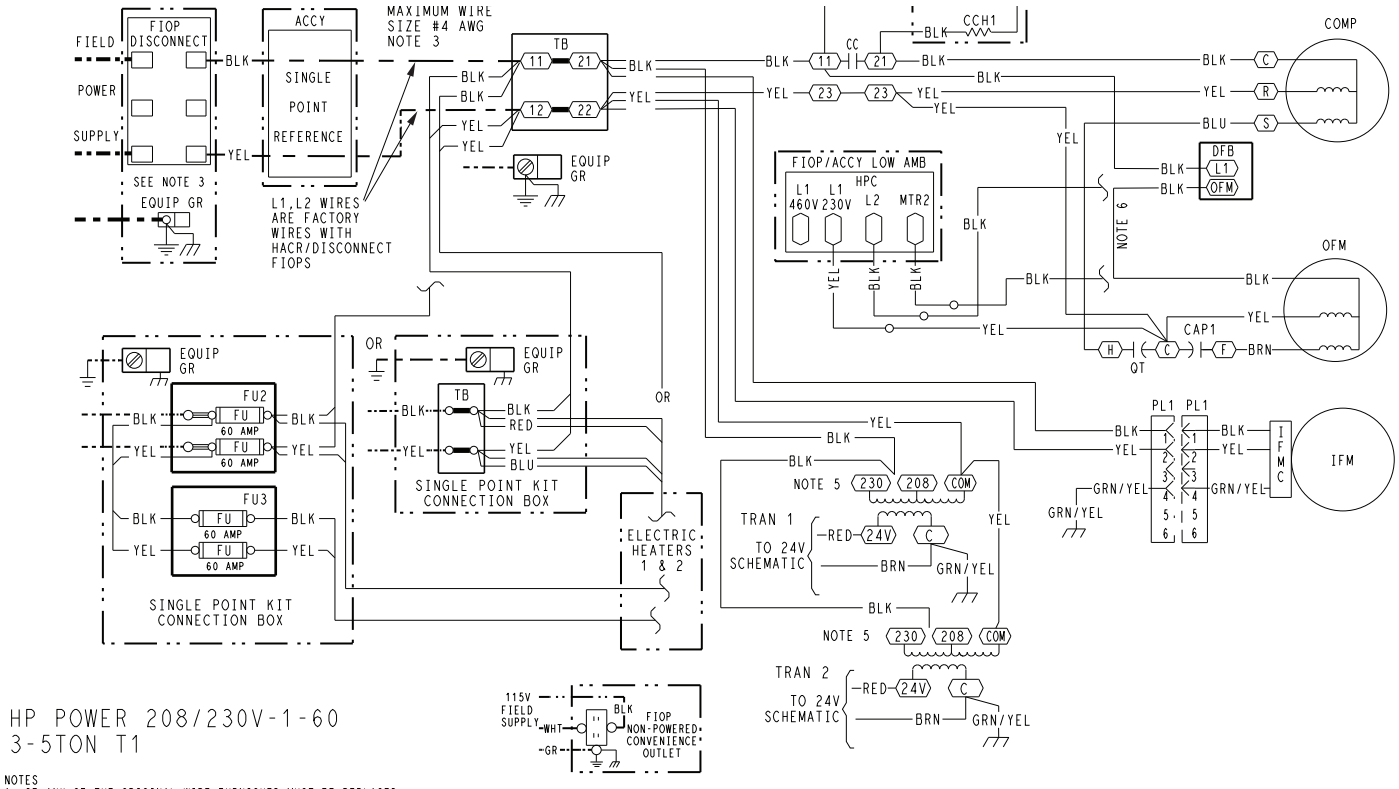

HP POWER 208/230V-1-60
3-5TON T1

NOTES
1. IF ANY OF THE ORIGINAL WIRE FURNISHED MUST BE REPLACED. IT MUST BE REPLACED WITH TYPE 90° C WIRE OR ITS EQUIVALENT.
2. COMPRESSOR AND FAN MOTORS ARE THERMALLY PROTECTED.
3. USE COPPER CONDUCTOR ONLY.
4. DO NOT DISCONNECT POWER PLUG OR SIGNAL WIRE WHILE UNDER LOAD.
5. ON 208/230V UNITS, TRAN IS WIRED FOR 230V. IF UNIT IS TO BE RUN WITH 208V POWER SUPPLY, DISCONNECT BLK WIRE FROM 230V TAP AND CONNECT TO 208V TAP.
6. THIS WIRE NOT USED WITH LOW AMBIENT FIOP/ACCY.

LEGEND

- MARKED WIRE
- TERMINAL (MARKED)
- TERMINAL (UNMARKED)
- TERMINAL BLOCK
- SPLICE
- SPLICE (MARKED)
- FACTORY WIRING
- FIELD CONTROL WIRING
- FIELD POWER WIRING
- CIRCUIT BOARD TRACE
- ACCESSORY OR OPTIONAL WIRING

ACCY	ACCESSORY
AWG	AMERICAN WIRE GAGE
BAS	BUILDING AUTOMATION NETWORK
CC	CONTACTOR,COMPRESSOR
C	COMMON
CAP	CAPACITOR
CB	CIRCUIT BREAKER
CCH	CRANKCASE HEATER
CCHR	CRANKCASE HEATER RELAY
CCHT S	CRANKCASE HEATER TEMP SWITCH
CLO	COMPRESSOR LOCKOUT
CLV	COOLING LIQUID VALVE
COFS	CONDENSATE OVERFLOW SWITCH
COM	SIGNAL COMMON
COMP	COMPRESSOR MOTOR
DDC	DIRECT DIGITAL CONTROL
DFB	DEFROST BOARD
DFT	DEFROST THERMOSTAT
EHR	ELECTRIC HEAT RELAY
ENTH	ENTHALPY
ERV	ENERGY RECOVERY VENTILATOR
ESL	ENTHALPY SENSOR - LOW
FB	FUSE BLOCK
FIOP	FACTORY INSTALLED OPTION
FPT	FREEZE PROTECTION THERMOSTAT
FST	FAN HOUSING TEMP SENSOR
FU	FUSE
G	THERMOSTAT FAN CALL
GR(GND)	GROUND
HACR	HEATING, AIR-CONDITIONING, REFRIGERATION BREAKER
HR	HEATER RELAY
HGRH	HOT GAS REHEAT
HPC	HEAD PRESSURE CONTROL
HPS	HIGH PRESSURE SWITCH
HUM	HUMIDISTAT
IAQ	INDOOR AIR QUALITY SENSORS
IFM	INDOOR FAN MOTOR
IFMC	INDOOR FAN MOTOR CONTROL
IFO	INDOOR FAN ON SIGNAL
IRH	INDOOR RELATIVE HUMIDITY
JMP	JUMPER
L1	LINE 1
LA	LOW AMBIENT LOCKOUT
LAR	LOW AMBIENT RELAY
LAS	LOW AMBIENT SWITCH
LDR	COMPRESSOR LOADER
LEN	LOCAL EQUIPMENT NETWORK
LOC	LOSS OF CHARGE
LPS	LOW PRESSURE SWITCH
LS	LIMIT SWITCH
LSM	LIMIT SWITCH (MANUAL RESET)
LTLO	LOW TEMP LOCKOUT
MTR	MOTOR
OAQ	OUTDOOR AIR QUALITY
OAT	OUTDOOR AIR TEMP. SEN
OFM	OUTDOOR FAN MOTOR
OFR	OUTDOOR FAN RELAY
OL	OVERLOAD
PER	POWER EXHAUST RELAY
PH	PHASE
PL	PLUG ASSEMBLY
POT	POTENTIOMETER
PMR	PHASE MONITOR RELAY
PS	PRESSURE SWITCH
PWM	PULSE WIDTH MODULATION
QT	QUADRUPLE TERMINAL
R	THERMOSTAT POWER
RAT	RETURN AIR TEMP. SEN
RDV	REHEAT DISCHARGE VALVE
RH	RELATIVE HUMIDITY
RLV	REHEAT LIQUID VALVE
RNET	LOCAL ACCESS NETWORK
RVS	REVERSING VALVE SOLENOID
SAT	SUPPLY AIR TEMP SENSOR
SDP	SYSTEM DISCHARGE PRESSURE
SPRH	SPACE RELATIVE HUMIDITY
SPT	SPACE TEMPERATURE SENSOR
SPTO	SPACE TEMPERATURE OFFSET
SSP	SYSTEM SUCTION PRESSURE
SW	SWITCH
TB	TERMINAL BLOCK
TDR	TIME DELAY RELAY
TRAN	TRANSFORMER
UCB	UNIT CONTROL BOARD
W1	1st STAGE OF HEATING CALL
W2	2nd STAGE OF HEATING CALL
Y1	1st STAGE OF COOLING CALL
Y2	2nd STAGE OF COOLING CALL

48TC003163 | A

Fig. 42 — Typical 50FCQ 04-06 Power Wiring Diagram, 208-230V/1/60 Unit Shown

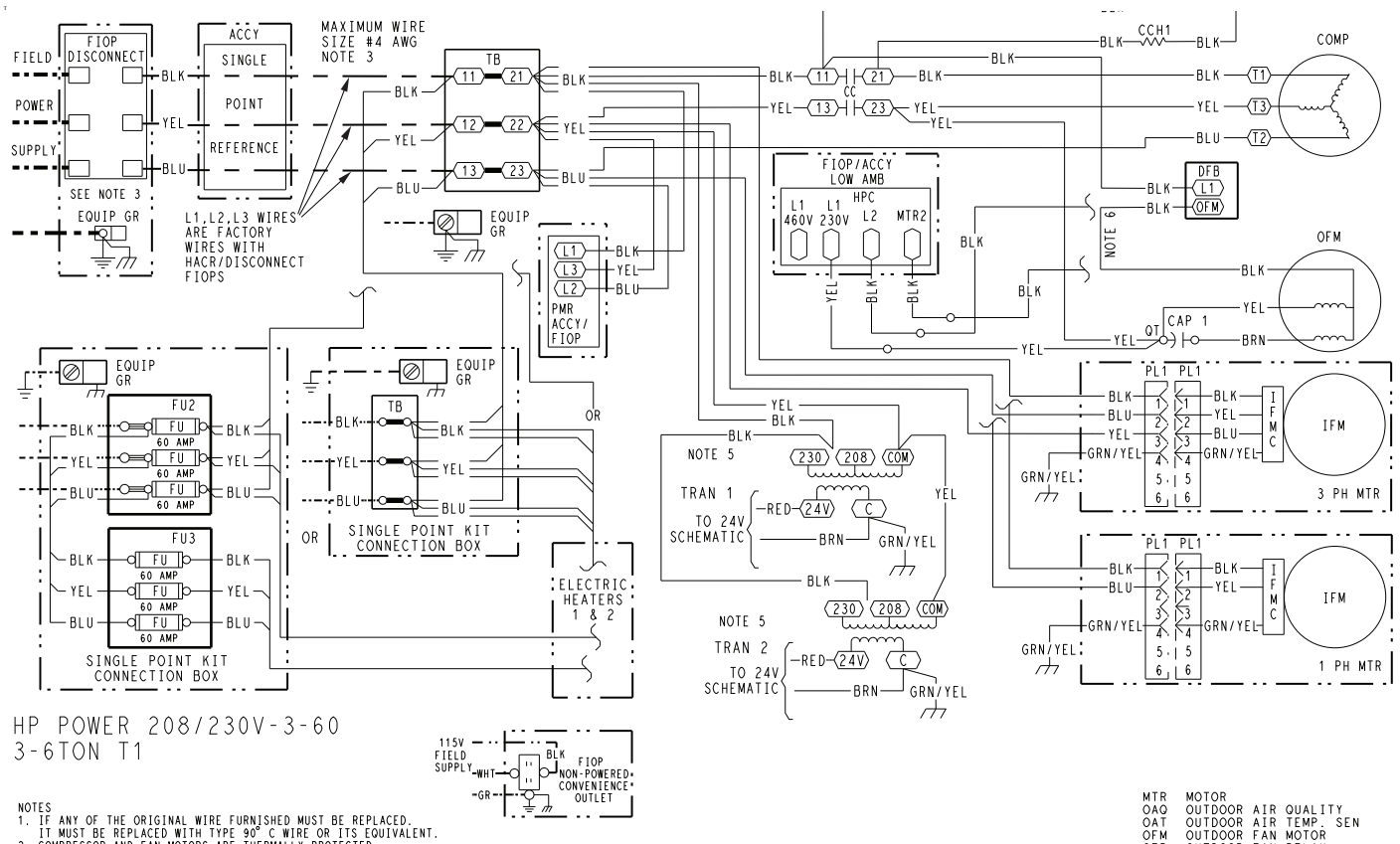

HP POWER 208/230V-3-60
3-6TON T1

NOTES
1. IF ANY OF THE ORIGINAL WIRE FURNISHED MUST BE REPLACED. IT MUST BE REPLACED WITH TYPE 90° C WIRE OR ITS EQUIVALENT.
2. COMPRESSOR AND FAN MOTORS ARE THERMALLY PROTECTED.
3. USE COPPER CONDUCTOR ONLY.
4. DO NOT DISCONNECT POWER PLUG OR SIGNAL WIRE WHILE UNDER LOAD.
5. ON 208/230V UNITS, TRAN IS WIRED FOR 230V. IF UNIT IS TO BE RUN WITH 208V POWER SUPPLY, DISCONNECT BLK WIRE FROM 230V TAP AND CONNECT TO 208V TAP.
6. THIS WIRE NOT USED WITH LOW AMBIENT FIOP/ACCY.

LEGEND

(X)	MARKED WIRE
(X)	TERMINAL (MARKED)
○	TERMINAL (UNMARKED)
[X]	TERMINAL BLOCK
●	SPLICE
(●)	SPLICE (MARKED)
———	FACTORY WIRING
— — —	FIELD CONTROL WIRING
- - - -	FIELD POWER WIRING
- - - - - -	CIRCUIT BOARD TRACE
—— · · —	ACCESSORY OR OPTIONAL WIRING

ACCY	ACCESSORY
AWG	AMERICAN WIRE GAGE
BAS	BUILDING AUTOMATION NETWORK
CC	CONTACTOR,COMPRESSOR
C	COMMON
CAP	CAPACITOR
CB	CIRCUIT BREAKER
CCH	CRANKCASE HEATER
CCHR	CRANKCASE HEATER RELAY
CCHTS	CRANKCASE HEATER TEMP SWITCH
CLO	COMPRESSOR LOCKOUT
CLV	COOLING LIQUID VALVE
COFS	CONDENSATE OVERFLOW SWITCH
COM	SIGNAL COMMON
COMP	COMPRESSOR MOTOR
DDC	DIRECT DIGITAL CONTROL
DFB	DEFROST BOARD
DFT	DEFROST THERMOSTAT
EHR	ELECTRIC HEAT RELAY
ENTH	ENTHALPY
ERV	ENERGY RECOVERY VENTILATOR
ESL	ENTHALPY SENSOR - LOW
FB	FUSE BLOCK
FIOP	FACTORY INSTALLED OPTION
FPT	FREEZE PROTECTION THERMOSTAT
FST	FAN HOUSING TEMP SENSOR
FU	FUSE
G	THERMOSTAT FAN CALL
GR(GND)	GROUND
HACR	HEATING, AIR-CONDITIONING, REFRIGERATION BREAKER
HR	HEATER RELAY
HPC	HEAD PRESSURE CONTROL
HPS	HIGH PRESSURE SWITCH
IAQ	INDOOR AIR QUALITY SENSORS
IFM	INDOOR FAN MOTOR
IFMC	INDOOR FAN MOTOR CONTROL
IFO	INDOOR FAN ON SIGNAL
IRH	INDOOR RELATIVE HUMIDITY
JMP	JUMPER
L1	LINE 1
LA	LOW AMBIENT LOCKOUT
LAR	LOW AMBIENT RELAY
LAS	LOW AMBIENT SWITCH
LDR	COMPRESSOR LOADER
LEN	LOCAL EQUIPMENT NETWORK
LLSVR	LIQUID LINE SOLENOID VALVE
LOC	LOSS OF CHARGE
LPS	LOW PRESSURE SWITCH
LS	LIMIT SWITCH
LSM	LIMIT SWITCH (MANUAL RESET)
LTLO	LOW TEMP LOCKOUT
MTR	MOTOR
OAQ	OUTDOOR AIR QUALITY
OAT	OUTDOOR AIR TEMP. SEN
OFM	OUTDOOR FAN MOTOR
OFR	OUTDOOR FAN RELAY
OL	OVERLOAD
PER	POWER EXHAUST RELAY
PH	PHASE
PL	PLUG ASSEMBLY
POT	POTENTIOMETER
PMR	PHASE MONITOR RELAY
PS	PRESSURE SWITCH
PWM	PULSE WIDTH MODULATION
QT	QUADRUPLE TERMINAL
R	THERMOSTAT POWER
RAT	RETURN AIR TEMP. SENSOR
RLV	REHEAT LIQUID VALVE
RNET	LOCAL ACCESS NETWORK
RVS	REVERSING VALVE SOLENOID
RVSR	REVERSING VALVE RELAY
SAT	SUPPLY AIR TEMP SENSOR
SDP	SYSTEM DISCHARGE PRESSURE
SPT	SPACE TEMPERATURE SENSOR
SPTO	SPACE TEMPERATURE OFFSET
SSP	SYSTEM SUCTION PRESSURE
SW	SWITCH
TB	TERMINAL BLOCK
TDR	TIME DELAY RELAY
TRAN	TRANSFORMER
UCB	UNIT CONTROL BOARD
W1	1st STAGE OF HEATING CALL
W2	2nd STAGE OF HEATING CALL
Y1	1st STAGE OF COOLING CALL
Y2	2nd STAGE OF COOLING CALL

48TC003162 | A

Fig. 43 — Typical 50FCQ 04-07 Power Wiring Diagram, 208-230V/3/60 Unit Shown

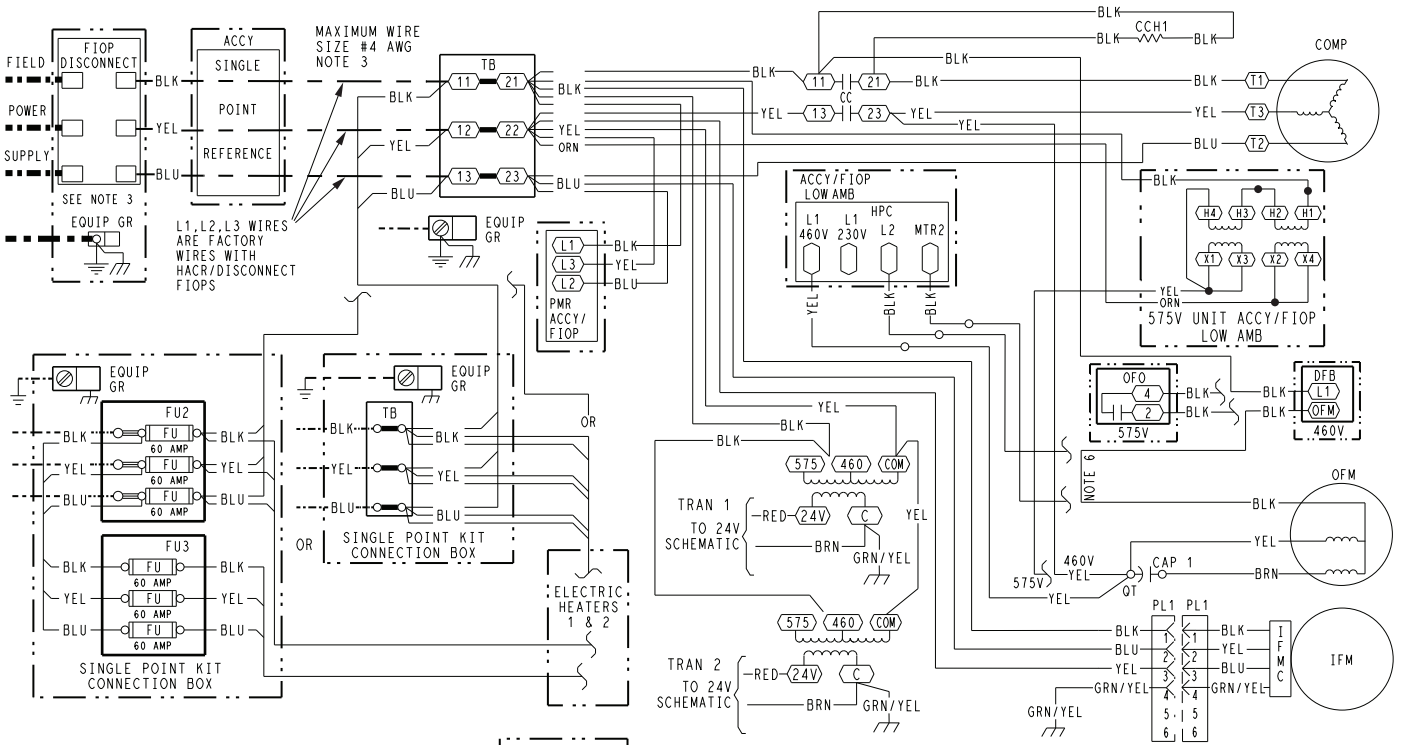

NOTES
1. IF ANY OF THE ORIGINAL WIRE FURNISHED MUST BE REPLACED. IT MUST BE REPLACED WITH TYPE 90° C WIRE OR ITS EQUIVALENT.
2. COMPRESSOR AND FAN MOTORS ARE THERMALLY PROTECTED.
3. USE COPPER CONDUCTOR ONLY.
4. DO NOT DISCONNECT POWER PLUG OR SIGNAL WIRE WHILE UNDER LOAD.
5. TRANSFORMER IS DEDICATED BASED ON UNIT VOLTAGE. TAPS ONLY SHOWN TO SIMPLIFY SCHEMATIC.
6. THIS WIRE NOT USED WITH LOW AMBIENT FIOP/ACCY.

LEGEND

- (X) MARKED WIRE
- (X) TERMINAL (MARKED)
- ○ TERMINAL (UNMARKED)
- [X] TERMINAL BLOCK
- ● SPLICE
- SPLICE (MARKED)
- FACTORY WIRING
- FIELD CONTROL WIRING
- FIELD POWER WIRING
- CIRCUIT BOARD TRACE
- ACCESSORY OR OPTIONAL WIRING

ACCY	ACCESSORY
AWG	AMERICAN WIRE GAGE
BAS	BUILDING AUTOMATION NETWORK
CC	CONTACTOR,COMPRESSOR
C	COMMON
CAP	CAPACITOR
CB	CIRCUIT BREAKER
CCH	CRANKCASE HEATER
CCHR	CRANKCASE HEATER RELAY
CCHTS	CRANKCASE HEATER TEMP SWITCH
CLO	COMPRESSOR LOCKOUT
CLV	COOLING LIQUID VALVE
COFS	CONDENSATE OVERFLOW SWITCH
COM	SIGNAL COMMON
COMP	COMPRESSOR MOTOR
DDC	DIRECT DIGITAL CONTROL
DFB	DEFROST BOARD
DFT	DEFROST THERMOSTAT
EHR	ELECTRIC HEAT RELAY
ENTH	ENTHALPY
ERV	ENERGY RECOVERY VENTILATOR
ESL	ENTHALPY SENSOR - LOW
FB	FUSE BLOCK
FIOP	FACTORY INSTALLED OPTION
FPT	FREEZE PROTECTION THERMOSTAT
FST	FAN HOUSING TEMP SENSOR
FU	FUSE
G	THERMOSTAT FAN CALL
GR(GND)	GROUND
HACR	HEATING, AIR-CONDITIONING, REFRIGERATION BREAKER
HR	HEATER RELAY
HGRH	HOT GAS REHEAT
HPC	HEAD PRESSURE CONTROL
HPS	HIGH PRESSURE SWITCH
HUM	HUMIDISTAT
IAQ	INDOOR AIR QUALITY SENSORS
IFM	INDOOR FAN MOTOR
IFMC	INDOOR FAN MOTOR CONTROL
IFO	INDOOR FAN ON SIGNAL
IRH	INDOOR RELATIVE HUMIDITY
JMP	JUMPER
L1	LINE 1
LA	LOW AMBIENT LOCKOUT
LAR	LOW AMBIENT RELAY
LAS	LOW AMBIENT SWITCH
LDR	COMPRESSOR LOADER
LEN	LOCAL EQUIPMENT NETWORK
LOC	LOSS OF CHARGE
LOOP PWR	CURRENT LOOP POWER
LPS	LOW PRESSURE SWITCH
LS	LIMIT SWITCH
LSM	LIMIT SWITCH (MANUAL RESET)
LTLO	LOW TEMP LOCKOUT
MBB	MAIN BASE BOARD
MOV	METAL OXIDE VARISTOR
MTR	MOTOR
OAQ	OUTDOOR AIR QUALITY
OAT	OUTDOOR AIR TEMP. SEN
OFM	OUTDOOR FAN MOTOR
OFO	OUTDOOR FAN ON RELAY
OFR	OUTDOOR FAN RELAY
OL	OVERLOAD
PER	POWER EXHAUST RELAY
PH	PHASE
PL	PLUG ASSEMBLY
POT	POTENTIOMETER
PMR	PHASE MONITOR RELAY
PS	PRESSURE SWITCH
PWM	PULSE WIDTH MODULATION
QT	QUADRUPLE TERMINAL
R	THERMOSTAT POWER
RAT	RETURN AIR TEMP. SEN
RDV	REHEAT DISCHARGE VALVE
RH	RELATIVE HUMIDITY
RLV	REHEAT LIQUID VALVE
RNET	LOCAL ACCESS NETWORK
RVS	REVERSING VALVE SOLENOID
SAT	SUPPLY AIR TEMP SENSOR
SDP	SYSTEM DISCHARGE PRESSURE
SPRH	SPACE RELATIVE HUMIDITY
SPT	SPACE TEMPERATURE SENSOR
SPTO	SPACE TEMPERATURE OFFSET
SSP	SYSTEM SUCTION PRESSURE
SW	SWITCH
TB	TERMINAL BLOCK
TDR	TIME DELAY RELAY
TRAN	TRANSFORMER
UCB	UNIT CONTROL BOARD
W1	1st STAGE OF HEATING CALL
W2	2nd STAGE OF HEATING CALL
Y1	1st STAGE OF COOLING CALL
Y2	2nd STAGE OF COOLING CALL

48TC003164 | A

Fig. 44 — Typical 50FCQ 04-07 Power Wiring Diagram, 460-575V/3/60 Unit Shown

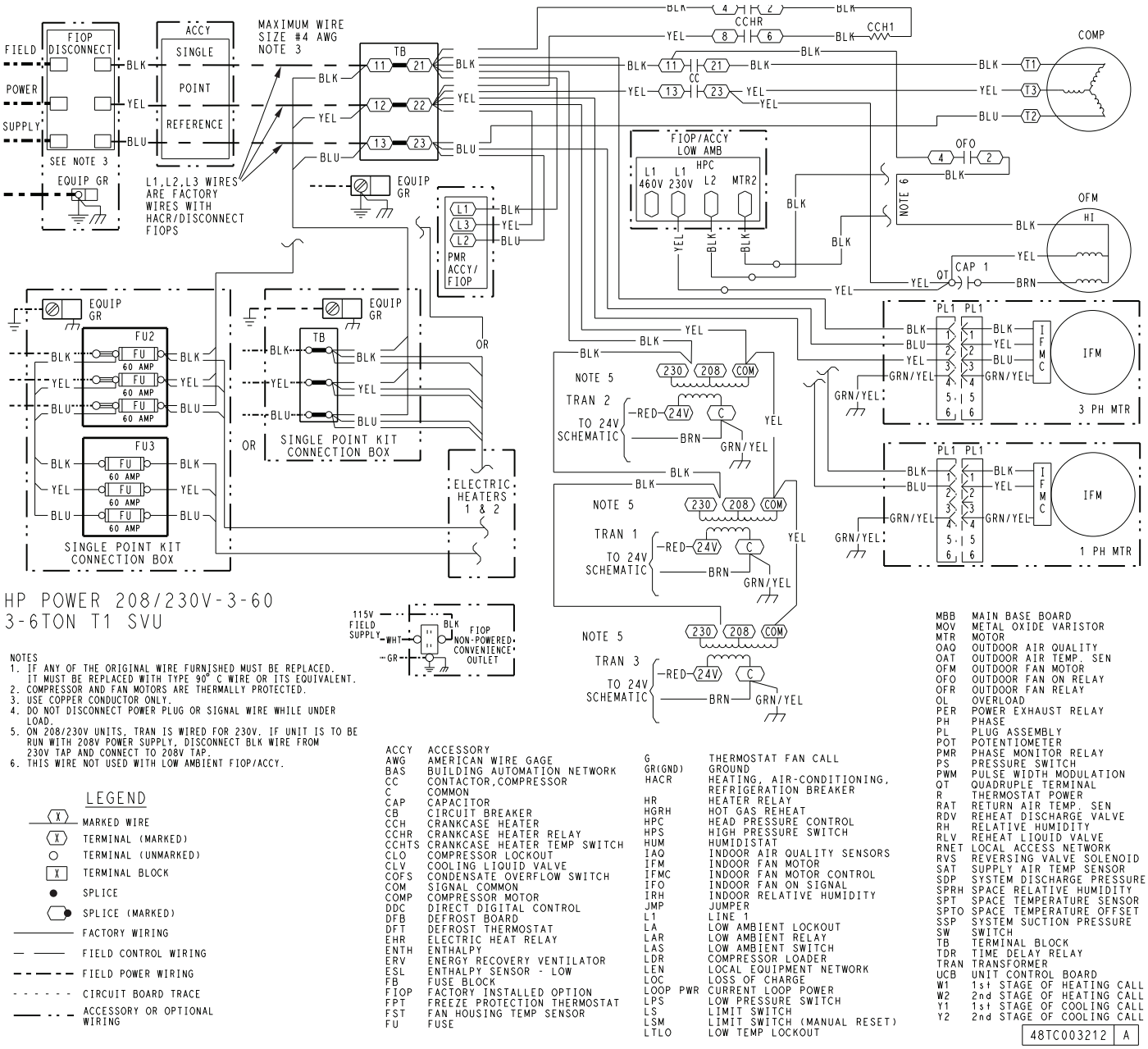

HP POWER 208/230V-3-60
3-6TON T1 SVU

NOTES
1. IF ANY OF THE ORIGINAL WIRE FURNISHED MUST BE REPLACED. IT MUST BE REPLACED WITH TYPE 90° C WIRE OR ITS EQUIVALENT.
2. COMPRESSOR AND FAN MOTORS ARE THERMALLY PROTECTED.
3. USE COPPER CONDUCTOR ONLY.
4. DO NOT DISCONNECT POWER PLUG OR SIGNAL WIRE WHILE UNDER LOAD.
5. ON 208/230V UNITS, TRAN IS WIRED FOR 230V. IF UNIT IS TO BE RUN WITH 208V POWER SUPPLY, DISCONNECT BLK WIRE FROM 230V TAP AND CONNECT TO 208V TAP.
6. THIS WIRE NOT USED WITH LOW AMBIENT FIOP/ACCY.

LEGEND

(X)	MARKED WIRE
(X)	TERMINAL (MARKED)
○	TERMINAL (UNMARKED)
[X]	TERMINAL BLOCK
●	SPLICE
(●)	SPLICE (MARKED)
———	FACTORY WIRING
— — —	FIELD CONTROL WIRING
- - - -	FIELD POWER WIRING
- - - - - -	CIRCUIT BOARD TRACE
—— · · —	ACCESSORY OR OPTIONAL WIRING

ACCY	ACCESSORY
AWG	AMERICAN WIRE GAGE
BAS	BUILDING AUTOMATION NETWORK
CC	CONTACTOR,COMPRESSOR
C	COMMON
CAP	CAPACITOR
CB	CIRCUIT BREAKER
CCH	CRANKCASE HEATER
CCHR	CRANKCASE HEATER RELAY
CCHTS	CRANKCASE HEATER TEMP SWITCH
CLO	COMPRESSOR LOCKOUT
CLV	COOLING LIQUID VALVE
COFS	CONDENSATE OVERFLOW SWITCH
COM	SIGNAL COMMON
COMP	COMPRESSOR MOTOR
DDC	DIRECT DIGITAL CONTROL
DFB	DEFROST BOARD
DFT	DEFROST THERMOSTAT
EHR	ELECTRIC HEAT RELAY
ENTH	ENTHALPY
ERV	ENERGY RECOVERY VENTILATOR
ESL	ENTHALPY SENSOR - LOW
FB	FUSE BLOCK
FIOP	FACTORY INSTALLED OPTION
FPT	FREEZE PROTECTION THERMOSTAT
FST	FAN HOUSING TEMP SENSOR
FU	FUSE
G	THERMOSTAT FAN CALL
GR(GND)	GROUND
HACR	HEATING, AIR-CONDITIONING, REFRIGERATION BREAKER
HR	HEATER RELAY
HGRH	HOT GAS REHEAT
HPC	HEAD PRESSURE CONTROL
HPS	HIGH PRESSURE SWITCH
HUM	HUMIDISTAT
IAQ	INDOOR AIR QUALITY SENSORS
IFM	INDOOR FAN MOTOR
IFMC	INDOOR FAN MOTOR CONTROL
IFO	INDOOR FAN ON SIGNAL
IRH	INDOOR RELATIVE HUMIDITY
JMP	JUMPER
L1	LINE 1
LA	LOW AMBIENT LOCKOUT
LAR	LOW AMBIENT RELAY
LAS	LOW AMBIENT SWITCH
LDR	COMPRESSOR LOADER
LEN	LOCAL EQUIPMENT NETWORK
LOC	LOSS OF CHARGE
LOOP PWR	CURRENT LOOP POWER
LPS	LOW PRESSURE SWITCH
LS	LIMIT SWITCH
LSM	LIMIT SWITCH (MANUAL RESET)
LTLO	LOW TEMP LOCKOUT
MBB	MAIN BASE BOARD
MOV	METAL OXIDE VARISTOR
MTR	MOTOR
OAQ	OUTDOOR AIR QUALITY
OAT	OUTDOOR AIR TEMP. SEN
OFM	OUTDOOR FAN MOTOR
OFO	OUTDOOR FAN ON RELAY
OFR	OUTDOOR FAN RELAY
OL	OVERLOAD
PER	POWER EXHAUST RELAY
PH	PHASE
PL	PLUG ASSEMBLY
POT	POTENTIOMETER
PMR	PHASE MONITOR RELAY
PS	PRESSURE SWITCH
PWM	PULSE WIDTH MODULATION
QT	QUADRUPLE TERMINAL
R	THERMOSTAT POWER
RAT	RETURN AIR TEMP. SEN
RDV	REHEAT DISCHARGE VALVE
RH	RELATIVE HUMIDITY
RLV	REHEAT LIQUID VALVE
RNET	LOCAL ACCESS NETWORK
RVS	REVERSING VALVE SOLENOID
SAT	SUPPLY AIR TEMP SENSOR
SDP	SYSTEM DISCHARGE PRESSURE
SPRH	SPACE RELATIVE HUMIDITY
SPT	SPACE TEMPERATURE SENSOR
SPTO	SPACE TEMPERATURE OFFSET
SSP	SYSTEM SUCTION PRESSURE
SW	SWITCH
TB	TERMINAL BLOCK
TDR	TIME DELAY RELAY
TRAN	TRANSFORMER
UCB	UNIT CONTROL BOARD
W1	1st STAGE OF HEATING CALL
W2	2nd STAGE OF HEATING CALL
Y1	1st STAGE OF COOLING CALL
Y2	2nd STAGE OF COOLING CALL

48TC003212 | A

Fig. 45 — Typical 50FCQ 04-07 Power Wiring Diagram, 208-230V/3/60 Unit with SystemVu Controller Shown

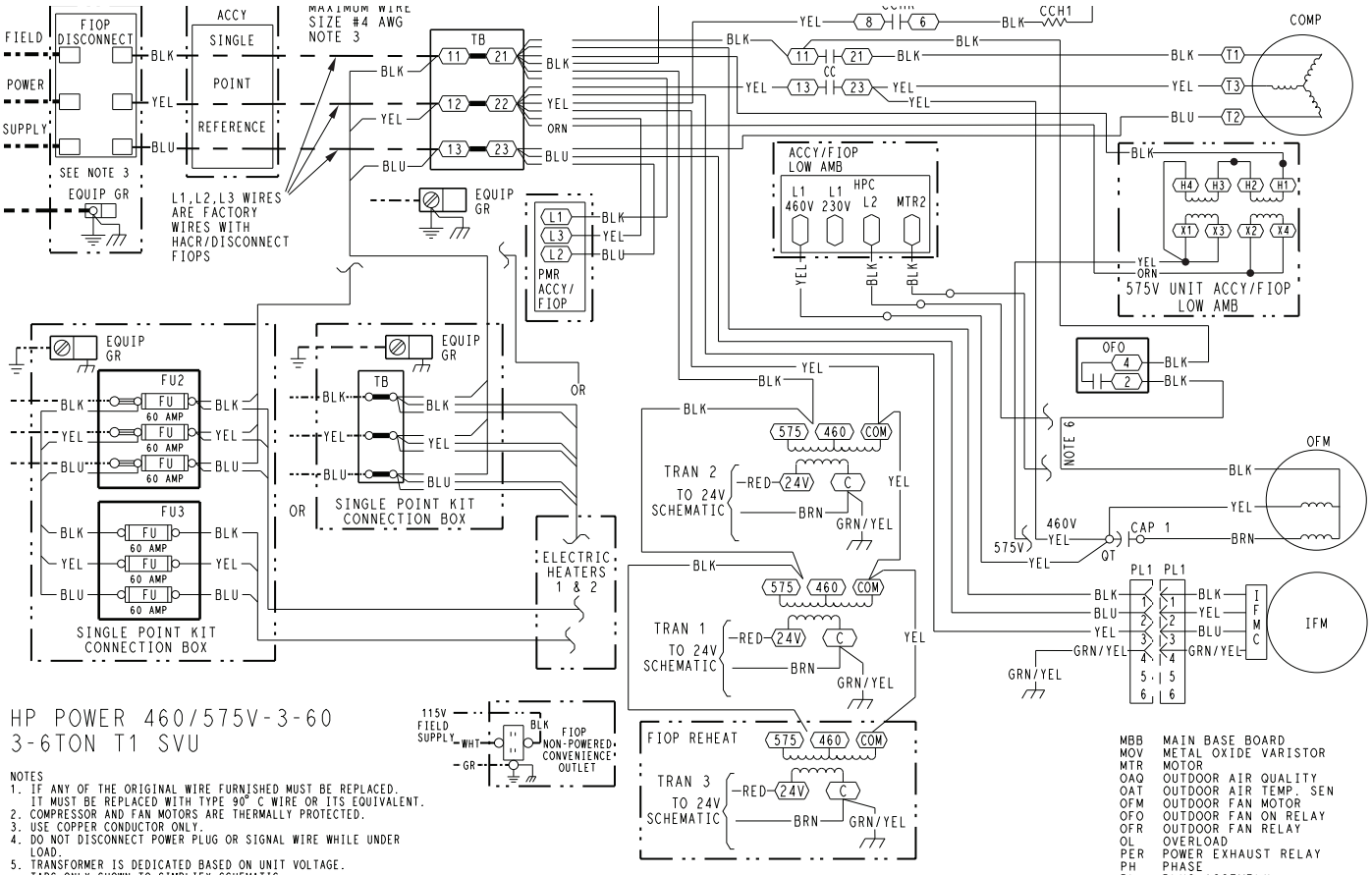

HP POWER 460/575V-3-60
3-6TON T1 SVU

NOTES
1. IF ANY OF THE ORIGINAL WIRE FURNISHED MUST BE REPLACED. IT MUST BE REPLACED WITH TYPE 90° C WIRE OR ITS EQUIVALENT.
2. COMPRESSOR AND FAN MOTORS ARE THERMALLY PROTECTED.
3. USE COPPER CONDUCTOR ONLY.
4. DO NOT DISCONNECT POWER PLUG OR SIGNAL WIRE WHILE UNDER LOAD.
5. TRANSFORMER IS DEDICATED BASED ON UNIT VOLTAGE. TAPS ONLY SHOWN TO SIMPLIFY SCHEMATIC.
6. THIS WIRE NOT USED WITH LOW AMBIENT FIOP/ACCY.

LEGEND

- MARKED WIRE
- TERMINAL (MARKED)
- TERMINAL (UNMARKED)
- TERMINAL BLOCK
- SPLICE
- SPLICE (MARKED)
- FACTORY WIRING
- FIELD CONTROL WIRING
- FIELD POWER WIRING
- CIRCUIT BOARD TRACE
- ACCESSORY OR OPTIONAL WIRING

ACCY	ACCESSORY
AWG	AMERICAN WIRE GAGE
BAS	BUILDING AUTOMATION NETWORK
CC	CONTACTOR,COMPRESSOR
C	COMMON
CAP	CAPACITOR
CB	CIRCUIT BREAKER
CCH	CRANKCASE HEATER
CCHR	CRANKCASE HEATER RELAY
CCHTS	CRANKCASE HEATER TEMP SWITCH
CLO	COMPRESSOR LOCKOUT
CLV	COOLING LIQUID VALVE
COFS	CONDENSATE OVERFLOW SWITCH
COM	SIGNAL COMMON
COMP	COMPRESSOR MOTOR
DDC	DIRECT DIGITAL CONTROL
DFB	DEFROST BOARD
DFT	DEFROST THERMOSTAT
EHR	ELECTRIC HEAT RELAY
ENTH	ENTHALPY
ERV	ENERGY RECOVERY VENTILATOR
ESL	ENTHALPY SENSOR - LOW
FB	FUSE BLOCK
FIOP	FACTORY INSTALLED OPTION
FPT	FREEZE PROTECTION THERMOSTAT
FST	FAN HOUSING TEMP SENSOR
FU	FUSE
G	THERMOSTAT FAN CALL
GR(GND)	GROUND
HACR	HEATING, AIR-CONDITIONING, REFRIGERATION BREAKER
HR	HEATER RELAY
HGRH	HOT GAS REHEAT
HPC	HEAD PRESSURE CONTROL
HPS	HIGH PRESSURE SWITCH
HUM	HUMIDISTAT
IAQ	INDOOR AIR QUALITY SENSORS
IFM	INDOOR FAN MOTOR
IFMC	INDOOR FAN MOTOR CONTROL
IFO	INDOOR FAN ON SIGNAL
IRH	INDOOR RELATIVE HUMIDITY
JMP	JUMPER
L1	LINE 1
LA	LOW AMBIENT LOCKOUT
LAR	LOW AMBIENT RELAY
LAS	LOW AMBIENT SWITCH
LDR	COMPRESSOR LOADER
LEN	LOCAL EQUIPMENT NETWORK
LOC	LOSS OF CHARGE
LOOP PWR	CURRENT LOOP POWER
LPS	LOW PRESSURE SWITCH
LS	LIMIT SWITCH
LSM	LIMIT SWITCH (MANUAL RESET)
LTLO	LOW TEMP LOCKOUT
MBB	MAIN BASE BOARD
MOV	METAL OXIDE VARISTOR
MTR	MOTOR
OAQ	OUTDOOR AIR QUALITY
OAT	OUTDOOR AIR TEMP. SEN
OFM	OUTDOOR FAN MOTOR
OFO	OUTDOOR FAN ON RELAY
OFR	OUTDOOR FAN RELAY
OL	OVERLOAD
PER	POWER EXHAUST RELAY
PH	PHASE
PL	PLUG ASSEMBLY
POT	POTENTIOMETER
PMR	PHASE MONITOR RELAY
PS	PRESSURE SWITCH
PWM	PULSE WIDTH MODULATION
QT	QUADRUPLE TERMINAL
R	THERMOSTAT POWER
RAT	RETURN AIR TEMP. SEN
RDV	REHEAT DISCHARGE VALVE
RH	RELATIVE HUMIDITY
RLV	REHEAT LIQUID VALVE
RNET	LOCAL ACCESS NETWORK
RVS	REVERSING VALVE SOLENOID
SAT	SUPPLY AIR TEMP SENSOR
SDP	SYSTEM DISCHARGE PRESSURE
SPRH	SPACE RELATIVE HUMIDITY
SPT	SPACE TEMPERATURE SENSOR
SPTO	SPACE TEMPERATURE OFFSET
SSP	SYSTEM SUCTION PRESSURE
SW	SWITCH
TB	TERMINAL BLOCK
TDR	TIME DELAY RELAY
TRAN	TRANSFORMER
UCB	UNIT CONTROL BOARD
W1	1st STAGE OF HEATING CALL
W2	2nd STAGE OF HEATING CALL
Y1	1st STAGE OF COOLING CALL
Y2	2nd STAGE OF COOLING CALL

48TC003213 | A

Fig. 46 — Typical 50FCQ 04-07 Power Wiring Diagram, 460-575V/3/60 Unit with SystemVu Controller Shown

EconoMi$er® X (Factory Option)

The EconoMi$er X system is an expandable economizer control system, which includes a W7220 economizer module (controller) with an LCD and keypad (see Fig. 47). The W7220 can be configured with optional sensors.

Fig. 47 — W7220 Economizer Module

The W7220 economizer module can be used as a stand-alone economizer module wired directly to a commercial set-back space thermostat and sensors to provide outside air dry-bulb economizer control.

The W7220 economizer module can be connected to optional sensors for single or differential enthalpy control. The W7220 economizer module provides power and communications for the sensors.

The W7220 economizer module automatically detects sensors by polling to determine which sensors are present. If a sensor loses communications after it has been detected, the W7220 economizer controller indicates a device fail error on its LCD.

SYSTEM COMPONENTS

The EconoMi$er X system includes an economizer module, 20k mixed air sensor, damper actuator, and either a 20k outdoor air temperature sensor or S-Bus enthalpy sensors.

Economizer Module

The module is the core of the EconoMi$er X system. The module is mounted in the unit's control box, and includes the user interface for the system. The W7220 economizer module provides the basic inputs and outputs to provide simple economizer control. When used with the optional sensors, the economizer module provides more advanced economizer functionality.

S-Bus Enthalpy Control Sensors

The sensor is a combination temperature and humidity sensor which is powered by and communicates on the S-Bus. Up to 3 sensors may be configured with the W7220 economizer module.

CO_2 Sensor (optional)

The CO_2 sensor can be added for Demand Controlled Ventilation (DCV).

SPECIFICATIONS

W7220 Economizer Module

The module is designed for use with 2 to 10 vdc or bus communicating actuator. The module includes terminals for CO_2 sensor, Mixed Air sensor, and an Outdoor Dry Bulb sensor. Enthalpy and other options are available with bus sensors.

User Interface

Provides status for normal operation, setup parameters, checkout tests, and alarm and error conditions with a 2-line 16 character LCD display and 4 button keypad.

Electrical

- Rated Voltage — 20 to 30 vac RMS, 50/60 Hz
- Transformer — 100 va maximum system input
- Nominal Power Consumption (at 24 vac, 60 Hz) — 11.5 VA without sensors or actuators
- Relay Digital Output Rating at 30 vac (maximum power from Class 2 input only) — 1.5A run:
  3.5A inrush at 0.45PF (200,000 cycles) or
  7.5A inrush at 0.45PF (100,000 cycles)
- External Sensors Power Output — 21 vdc ± 5% at 48mA

IMPORTANT: All inputs and outputs must be Class 2 wiring.

INPUTS

Sensors

NOTE: A Mixed Air (MA) analog sensor is required on all W7220 units; either an Outdoor Air (OA) sensor for dry bulb change over or an OA bus sensor for outdoor enthalpy change over is required in addition to the MA sensor. An additional Return Air (RA) bus sensor can be added to the system for differential enthalpy or dry bulb changeover. For differential dry bulb changeover, a 20k ohm sensor is required in the OA and a bus sensor in the RA. DIP switch on RA bus sensor must be set in the RA position.

<u>Dry Bulb Temperature (optional) and Mixed Air (required), 20k NTC</u>

2-wire (18 to 22 AWG);

Temperature range –40°F to 150°F (–40°C to 66°C)

Temperature accuracy: 0°F/+2°F

<u>Temperature and Humidity, C7400S1000 (optional)</u>

S-Bus; 2-wire (18 to 22 AWG)

Temperature: range –40°F to 150°F (–40°C to 65°C)

Temperature accuracy: 0°F/+2°F (–18°C/–17°C)

Humidity: range 0 to 100% RH with 5% accuracy.

NOTE: Up to 3 S-Bus sensors may be connected to the W7220 economizer module for outdoor air (OA), return air (RA) and discharge (supply) air (DA).

<u>4 Binary Inputs</u>

1-wire 24 vac + common GND (see page 32 for wiring details).

<u>24 vac power supply</u>

20 to 30 vac 50/60Hz; 100 VA Class 2 transformer.

OUTPUTS

Actuator Signal

2 to 10 vdc; minimum actuator impedance is 2k ohm; bus 2-wire output for bus communicating actuators.

Exhaust fan, Y1, Y2 and AUX1 O

All Relay Outputs (at 30 vac):

Running: 1.5A maximum

Inrush: 7.5A maximum

ENVIRONMENTAL

Operating Temperature

–40°F to 150°F (–40°C to 65°C).

Exception of display operation down to –4°F (–20°C) with full recovery at –4°F (–20°C) from exposure to –40°F (–40°C)

Storage Temperature

–40°F to 150°F (–40°C to 65°C)

Shipping Temperature

–40°F to 150°F (–40°C to 65°C)

Relative Humidity

5% to 95% RH non-condensing

ECONOMIZER MODULE WIRING DETAILS

Use Fig. 48 and Tables 6 and 7 to locate the wiring terminals for the Economizer module.

NOTE: The 4 terminal blocks are removable. Slide out each terminal block, wire it, and then slide it back into place.

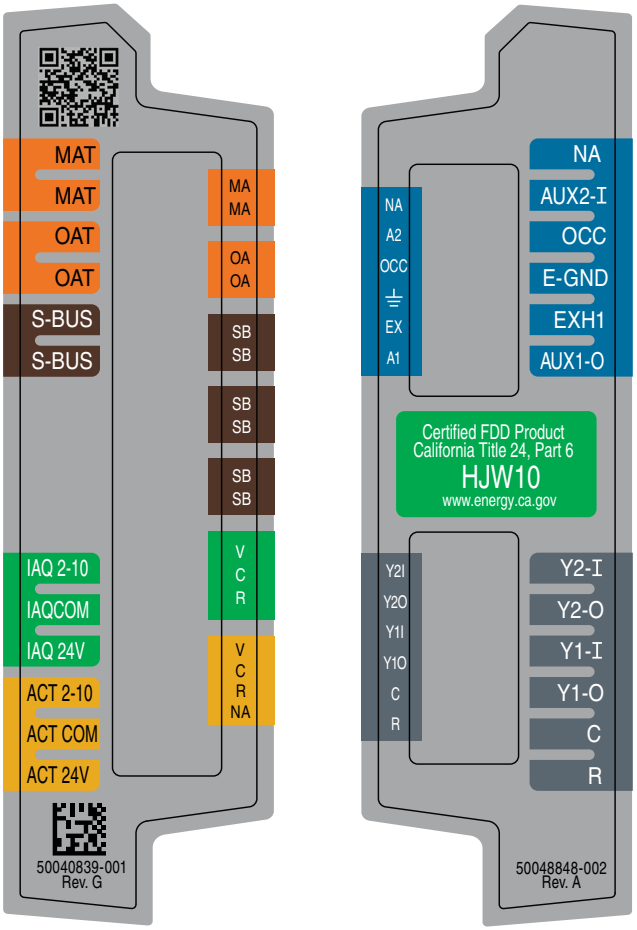

Fig. 48 — W7220 Wiring Terminals

Table 6 — Economizer Module (Left Hand Terminal Blocks)

LABEL	TYPE	DESCRIPTION
Top Left Terminal Block		
MAT **MAT**	20k NTC and COM	Mixed Air Temperature Sensor (Polarity Insensitive Connection)
OAT **OAT**	20k NTC and COM	Outdoor Air Temperature Sensor (Polarity Insensitive Connection)
S-BUS **S-BUS**	S-BUS (Sylk* Bus)	Enthalpy Control Sensor (Polarity Insensitive Connection)
Bottom Left Terminal Block		
IAQ 2-10	2-10 vdc	Air Quality Sensor Input (e.g. CO_2 sensor)
IAQ COM	COM	Air Quality Sensor Common
IAQ 24V	24 vac	Air Quality Sensor 24 vac Source
ACT 2-10	2-10 vdc	Damper Actuator Output (2-10 vdc)
ACT COM	COM	Damper Actuator Output Common
ACT 24v	24 vac	Damper Actuator 24 vac Source

*Sylk is a trademark of Honeywell International Inc.

Table 7 — Economizer Module (Right Hand Terminal Blocks)

LABEL	TYPE	DESCRIPTION
Top Right Terminal Blocks		
AUX2 I	24 vac IN	The first terminal is not used.
OCC	24 vac IN	Shut Down (SD) or HEAT (W) Conventional only and Heat Pump Changeover (O-B) in Heat Pump mode.
E-GND	E-GND	Occupied/Unoccupied Input
EXH1	24 vac OUT	Exhaust Fan 1 Output
AUX1 O	24 vac OUT	Programmable: Exhaust fan 2 output or ERV or System alarm output
Bottom Right Terminal Blocks		
Y2-I	24 vac IN	Y2 in - Cooling Stage 2 Input from space thermostat
Y2-O	24 vac OUT	Y2 out - Cooling Stage 2 Output to stage 2 mechanical cooling
Y1-I	24 vac IN	Y1 in - Cooling Stage 2 Input from space thermostat
Y1-O	24 vac OUT	Y1 out - Cooling Stage 2 Output to stage 2 mechanical cooling
C	COM	24 vac Common
R	24 vac	24 vac Power (hot)

S-Bus Sensor Wiring

The labels on the sensors and controller are color coded for ease of installation. Orange labeled sensors can only be wired to orange terminals on the controller. Brown labeled sensors can only be wired to S-bus (brown) terminals. Use Fig. 49 and Table 8 to locate the wiring terminals for each S-Bus and enthalpy control sensor.

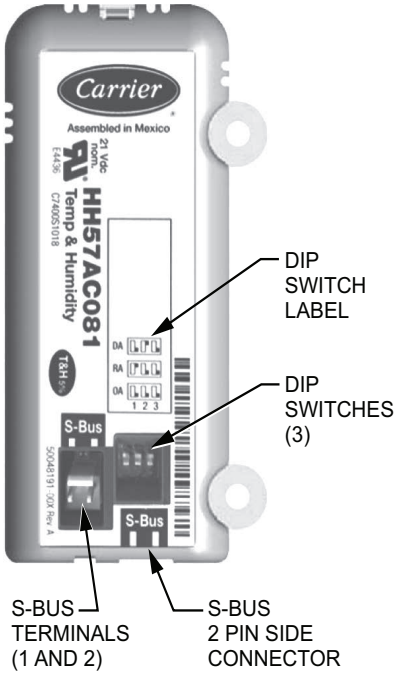

Fig. 49 — S-Bus Sensor DIP Switches

Table 8 — HH57AC081 Sensor Wiring Terminations

TERMINAL		TYPE	DESCRIPTION
NUMBER	LABEL		
1	S-BUS	S-BUS	S-BUS Communications (Enthalpy Control Sensor Bus)
2	S-BUS	S-BUS	S-BUS Communications (Enthalpy Control Sensor Bus)

Use Fig. 49 and Table 9 to set the DIP switches for the desired use of the sensor.

Table 9 — HH57AC081 Sensor DIP Switch

USE	DIP SWITCH POSITIONS FOR SWITCHES 1, 2, AND 3		
	1	2	3
DA	OFF	ON	OFF
RA	ON	OFF	OFF
OA	OFF	OFF	OFF

NOTE: When an S-Bus sensor is connected to an existing network, it will take 60 minutes for the network to recognize and auto-configure itself to use the new sensor.

During the 60 minute setup period, no alarms for sensor failures (except SAT) will be issued and no economizing function will be available.

CO_2 Sensor Wiring

When using a CO_2 sensor, the black and brown common wires are internally connected and only one is connected to "IAQ COM" on the W7220. Use the power from the W7220 to power the CO_2 sensor OR make sure the ground for the power supplies are common. See Fig. 50 for CO_2 sensor wiring.

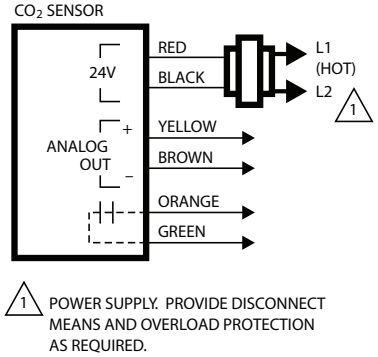

Fig. 50 — CO_2 Sensor Wiring

INTERFACE OVERVIEW

This section describes how to use the EconoMi$er® X user interface for:

- Keypad and menu navigation
- Settings and parameter changes
- Menu structure and selection

User Interface

The user interface consists of a 2-line LCD display and a 4-button keypad on the front of the economizer controller.

Keypad

Use the 4 navigation buttons (see Fig. 51) to scroll through the menus and menu items, select menu items, and to change parameter and configuration settings.

To use the keypad when working with menus:

- Press the ▲ (Up arrow) button to move to the previous menu.
- Press the ▼ (Down arrow) button to move to the next menu.
- Press the ↵ (Enter) button to display the first item in the currently displayed menu.
- Press the ⓐ (Menu Up/Exit) button to exit a menu's item and return to the list of menus.

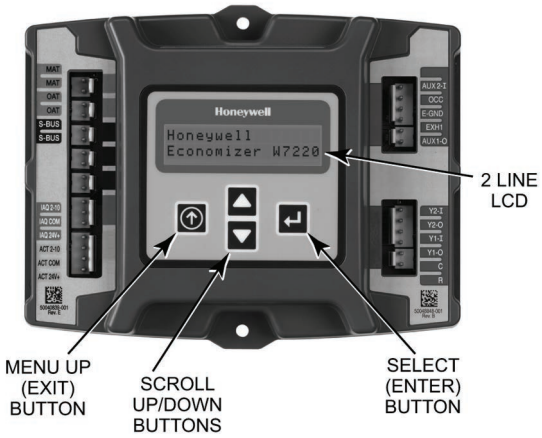

Fig. 51 — W7220 Controller Navigation Buttons

To use the keypad when working with Setpoints, System and Advanced Settings, Checkout tests and Alarms:

1. Navigate to the desired menu.
2. Press the ↵ (Enter) button to display the first item in the currently displayed menu.
3. Use the ▲ and ▼ buttons to scroll to the desired parameter.
4. Press the ↵ (Enter) button to display the value of the currently displayed item.
5. Press the ▲ button to increase (change) the displayed parameter value.
6. Press the ▼ button to decrease (change) the displayed parameter value.

NOTE: When values are displayed, pressing and holding the ▲ or ▼ button causes the display to automatically increment or decrement.

1. Press the ↵ (Enter) button to accept the displayed value and store it in nonvolatile RAM. "CHANGE STORED" displays.
2. Press the ↵ (Enter) button to return to the current menu parameter.
3. Press the ⓐ (Menu Up/Exit) button to return to the previous menu.

Menu Structure

Table 10 illustrates the complete hierarchy of menus and parameters for the EconoMi$er® X system.

The Menus in display order are:

- STATUS
- SETPOINTS
- SYSTEM SETUP
- ADVANCED SETUP
- CHECKOUT
- ALARMS

NOTE: Some parameters in the menus use the letters MA or MAT, indicating a mixed air temperature sensor location before

the cooling coil. This unit application has the control sensor located after the cooling coil, in the fan section, where it is designated as (Cooling) Supply Air Temperature or SAT sensor.

SETUP AND CONFIGURATION

Before being placed into service, the W7220 Economizer module must be set up and configured for the installed system.

> IMPORTANT: During setup, the economizer module is live at all times.

The setup process uses a hierarchical menu structure that is easy to use. Press the ▲ and ▼ arrow buttons to move forward and backward through the menus and press the button to select and confirm setup item changes.

Time-Out and Screensaver

When no buttons have been pressed for 10 minutes, the LCD displays a screen saver, which cycles through the Status items. Each Status items displays in turn and cycles to the next item after 5 seconds.

Table 10 — W7220 Menu Structure*

MENU	PARAMETER	PARAMETER DEFAULT VALUE	PARAMETER RANGE AND INCREMENT†	EXPANDED PARAMETER NAME Notes
STATUS	ECON AVAIL	NO	YES/NO	FIRST STAGE COOLING DEMAND (Y1–IN) YES = economizing available; the system can use outside air for free cooling when required
	ECONOMIZING	NO	YES/NO	FIRST STAGE COOLING RELAY OUTPUT YES = outside air being used for first stage cooling
	OCCUPIED	NO	YES/NO	OCCUPIED YES = OCC signal received from space thermostat or unitary controller YES = 24 vac on terminal OCC NO = 0 vac on terminal OCC
	HEAT PUMP	N/A**	COOL HEAT	HEAT PUMP MODE Displays COOL or HEAT when system is set to heat pump (Non-conventional)
	COOL Y1—IN	OFF	ON/OFF	FIRST STAGE COOLING DEMAND (Y1-IN) Y1–I signal from space thermostat or unitary controller for cooling stage 1. ON = 24 vac on terminal Y1–I OFF = 0 vac on terminal Y1–I
	COOL Y1—OUT	OFF	ON/OFF	FIRST STAGE COOLING RELAY OUTPUT Cool stage 1 Relay Output to stage 1 mechanical cooling (Y1–OUT terminal)
	COOL Y2—IN	OFF	ON/OFF	SECOND STAGE COOLING DEMAND (Y2–IN) Y2–I signal from space thermostat or unitary controller for second stage cooling. ON = 24 vac on terminal Y2–I OFF = 0 vac on terminal Y2–I
	COOL Y2—OUT	OFF	ON/OFF	SECOND STAGE COOLING RELAY OUTPUT Cool Stage 2 Relay Output to mechanical cooling (Y2–OUT terminal)
	MA TEMP	_ _ . _ °F (or _ _ . _ °C)	–40°F to 150°F (–40°C to 66°C)	SUPPLY AIR TEMPERATURE, Cooling Mode Displays value of measured mixed air from MAT sensor. Displays _ _ . _ °F if not connected, short or out of range.
	DA TEMP	_ _ . _ °F (or _ _ . _ °C)	–40°F to 150°F (–40°C to 66°C)	DISCHARGE AIR TEMPERATURE, after Heating section Displays when Discharge Air Sylk Bus sensor is connected and displays measured discharge temperature. Displays _ _ . _°F if sensor sends invalid value, if not connected, short or out of range.
	OA TEMP	_ _ . _ °F (or _ _ . _ °C)	–40°F to 140°F (–40°C to 60°C)	OUTSIDE AIR TEMP Displays measured value of outdoor air temperature. Displays _ _ . _°F if sensor sends invalid value, short or out of range.
	OA HUM	_ _ %	0 to 100%	OUTSIDE AIR RELATIVE HUMIDITY Displays measured value of outdoor humidity from OA Sylk Bus sensor. Displays _ _% if not connected short, or out of range.
	RA TEMP	_ _ . _ °F (or _ _ . _ °C)	0°F to 140°F (–18°C to 60°C)	RETURN AIR TEMPERATURE Displays measured value of return air temperature from RAT Sylk Bus sensor. Displays _ _ . _ °F if sensor sends invalid value, if not connected, short or out of range
	RA HUM	_ _ %	0 to 100%	RETURN AIR RELATIVE HUMIDITY Displays measured value of return air humidity from RA Sylk Bus sensor. Displays _ _% if sensor sends invalid value, if not connected, short or out of range
	IN CO2	_ _ _ ppm	0 to 2000 ppm	SPACE/RETURN AIR CO_2 Displays value of measured CO_2 from CO_2 sensor. Invalid if not connected, short or out of range. May be adjusted in Advanced menu by Zero offset and Span.
	DCV STATUS	N/A	ON/OFF	DEMAND CONTROLLED VENTILATION STATUS Displays ON if above set point and OFF if below set point, and ONLY if a CO_2 sensor is connected.
	DAMPER OUT	2.0v	2.0 to 10.0v	Displays voltage output to the damper actuator.***
	ACT POS	N/A	0 to 100%	Displays actual position of actuator
	ACT COUNT	N/A	1 to 65,535	Displays number of times actuator has cycled. 1 cycle equals 180 degrees of actuator movement in any direction.
	ACTUATOR	N/A	OK/Alarm (on Alarm menu)	Displays ERROR if voltage or torque is below actuator range.
	EXH1 OUT	OFF	ON/OFF	EXHAUST STAGE 1 RELAY OUTPUT Displays ON when damper position reaches programmed percentage set point. Output of EXH1 terminal: ON = relay closed OFF = relay open

Table 10 — W7220 Menu Structure* (cont)

MENU	PARAMETER	PARAMETER DEFAULT VALUE	PARAMETER RANGE AND INCREMENT†	EXPANDED PARAMETER NAME Notes
STATUS (cont)	EXH2 OUT	OFF	ON/OFF	EXHAUST STAGE 2 RELAY OUTPUT Output of AUX1 O terminal Displays ON when damper position reaches programmed percentage set point. ON = 24 vac output OFF = No output Displays only if AUX1 O = EXH2
	ERV	OFF	ON/OFF	ENERGY RECOVERY VENTILATOR Output of AUX1 O terminal; displays only if AUX1 O = ERV ON = 24 vac output OFF = No Output
	MECH COOL ON or HEAT STAGES ON	0	0, 1, or 2	Displays stage of mechanical cooling that is active. Displays the stage of heat pump heating that is active.
	FAN SPEED	N/A	LOW or HIGH	SUPPLY FAN SPEED Displays speed setting of fan on a 2-speed fan unit.
	W (HEAT IN)	N/A	ON/OFF	HEAT DEMAND STATUS Displays status of heat demand on a 2-speed fan unit.
SETPOINTS	MAT SET	53°F (12°C)	38°F to 70°F (3°C to 21°C); increment by 1°F	SUPPLY AIR SETPOINT The economizer will modulate the OA damper to maintain the mixed air temperature at the set point
	LOW T LOCK	32°F (0°C)	–45°F to 80°F (–43°C to 27°C); increment by 1°F	COMPRESSOR LOW TEMPERATURE LOCKOUT Set point determines outdoor temperature when the mechanical cooling cannot be turned on. Commonly referred to as the Compressor lockout. At or below the set point, the Y1-O and Y2-O will not be energized on the controller.
	DRYBLB SET	63°F (17°C)	48°F to 80°F (9°C to 27°C); increment by 1°F	OA DRY BULB TEMPERATURE CHANGEOVER SETPOINT Dry bulb set point will only appear if using dry bulb changeover. Set point determines where the economizer will assume outdoor air temperature is good for free cooling; e.g.; at 63°F unit will economize at 62°F and below and not economize at 64°F and above. There is a 2°F deadband.
	ENTH CURVE	ES3	ES1,ES2,ES3,ES4, or ES5	ENTHALPY CHANGEOVER CURVE ES curve will only appear if using enthalpy changeover. Enthalpy boundary "curves" for economizing using single enthalpy. See page 44 for description of enthalpy curves.
	DCV SET	1100ppm	500 to 2000 ppm; increment by 100	DEMAND CONTROLLED VENTILATION Displays only if CO_2 sensor is connected. Set point for Demand Controlled Ventilation of space. Above the set point, the OA dampers will modulate open to bring in additional OA to maintain a space ppm level below the set point.
	MIN POS	2.8 V	2 to 10 vdc	VENTILATION MINIMUM POSITION Displays ONLY if a CO_2 sensor is NOT connected. With 2-speed fan units, MIN POS L (low speed fan) and MIN POS H (high speed fan) settings are required. Default for MIN POS L is 3.2V and MIN POS H is 2.8V.
	VENTMAX	2.8 V	2 to 10 vdc	DCV MAXIMUM DAMPER POSITION Displays only if a CO_2 sensor is connected. Used for Vbz (ventilation max CFM) set point. VENTMAX is the same setting as MIN POS would be if unit did not have CO_2 sensor.
			100 to 9990 CFM; increment by 10	If OA, MA, RA, and CO_2 sensors are connected and DCV CAL ENABLE is set to AUTO mode, the OA dampers are controlled by CFM and displays from 100 to 9990 CFM.
			2 to 10 vdc	With 2-speed fan units, VENTMAX L (low speed fan) and VENTMAX H (high speed fan) settings are required. Default for VENTMAX L is 3.2V and VENTMAX H is 2.8V
	VENTMIN	2.25 V	2 to 10 vdc or 100 to 9990 CFM increment by 10	DCV MINIMUM DAMPER POSITION Displays only if a CO_2 sensor is connected. Used for Va (ventilation min CFM) set point. This is the ventilation for less than maximum occupancy of the space.
			100 to 9990 CFM; increment by 10	If OA, MA, RA, and CO_2 sensors are connected and DCV CAL ENABLE is set to AUTO mode, the OA dampers are controlled by CFM and displays from 100 to 9990 CFM.
			2 to 10 vdc	With 2-speed fan units VENTMIN L (low speed fan) and VENTMIN H (high speed fan) settings are required. Default for VENTMIN L is 2.5V and VENTMIN H is 2.25V
	ERV OAT SP††	32°F (0°C)	0°F to 50°F (–18°C to 10°C); increment by 1°F	ENERGY RECOVERY VENTILATOR UNIT OUTDOOR AIR TEMPERATURE SETPOINT Only when AUX1 O = ERV

Table 10 — W7220 Menu Structure* (cont)

MENU	PARAMETER	PARAMETER DEFAULT VALUE	PARAMETER RANGE AND INCREMENT†	EXPANDED PARAMETER NAME Notes
SETPOINTS (cont)	EXH1 SET	50%	0 to 100%; increment by 1	EXHAUST FAN STAGE 1 SETPOINT Set point for OA damper position when exhaust fan 1 is powered by the economizer. With 2-speed fan units, Exh1 L (low speed fan) and Exh1 H (high speed fan) settings are required. Default for Exh1 L is 65% and Exh1 H is 50%
	EXH2 SET	75%	0 to 100%; increment by 1	EXHAUST FAN STAGE 2 SETPOINT Set point for OA damper position when exhaust fan 2 is powered by the economizer. Only used when AUX1 O is set to EHX2. With 2-speed fan units, Exh2 L (low speed fan) and Exh2 H (high speed fan) settings are required. Default for Exh2 L is 80% and Exh2 H is 75%
SYSTEM SETUP	INSTALL	01/01/10	N/A	Display order = MM/DD/YY Setting order = DD, MM, then YY.
	UNITS DEG	°F	°F or °C	Sets economizer controller in degrees Fahrenheit or Celsius
	EQUIPMENT	CONV	CONV or HP	CONV = conventional; HP O/B = Enable Heat Pump mode. Use AUX2 I for Heat Pump input from thermostat or controller.
	AUX2 IN	W	Shutdown (SD) Heat (W1) HP(O) HP(B)	In CONV mode: SD = Enables configuration of shutdown (default); W = Informs controller that system is in heating mode. NOTE: If using 2-speed fan mode, you must program CONV mode for W. Shutdown is not available in 2-speed fan mode. In HP O/B mode: HP(O) = energize heat pump on Cool (default); HP(B) = energize heat pump on heat.
	FAN SPEED	2 speed	1 speed/2 speed	Sets the economizer controller for operation of 1 speed or 2 speed supply fan. The controller does not control the fan, but positions the OA and RA dampers to heating or cooling mode. NOTE: 2-speed fan option also needs Heat (W1) programmed in AUX 2 In.
	FAN CFM	5000 CFM	100 to 15000 CFM; increment by 100	UNIT DESIGN AIRFLOW (CFM) Enter only if using DCVCAL ENA = AUTO This is the capacity of the RTU. The value is found on the nameplate label for the specific unit.
	AUX1 OUT	NONE	NONE ERV EXH2 SYS	Select OUTPUT for AUX1 O relay • NONE = not configured (output is not used) • ERV = Energy Recovery Ventilator†† • EXH2 = second damper position 24 vac out for second exhaust fan • SYS = use output as an alarm signal
	OCC	INPUT	INPUT or ALWAYS	OCCUPIED MODE BY EXTERNAL SIGNAL When using a setback thermostat with occupancy out (24 vac), the 24 vac is input “INPUT” to the OCC terminal. If no occupancy output from the thermostat, then change program to “ALWAYS” OR add a jumper from terminal R to OCC terminal.
	FACTORY DEFAULT	NO	NO or YES	Resets all set points to factory defaults when set to YES. LCD will briefly flash YES and change to NO but all parameters will change to the factory default values.
ADVANCED SETUP	MA LO SET	45°F (7°C)	35°F to 65°F (2°C to 18°C); Increment by 1°F	SUPPLY AIR TEMPERATURE LOW LIMIT Temperature to activate Freeze Protection (close damper or modulate to MIN POS if temp falls below set value).
	FREEZE POS	CLO	CLO or MIN	FREEZE PROTECTION DAMPER POSITION Damper position when freeze protection is active (closed or MIN POS).
	CO2 ZERO	0ppm	0 to 500 ppm; Increment by 10	CO_2 ppm level to match CO_2 sensor start level.
	CO2 SPAN	2000ppm	1000 to 3000 ppm; Increment by 50	CO_2 ppm span to match CO_2 sensor; e.g.: 500-1500 sensor output would be 500 CO_2 zero and 1000 CO_2 span.
	STG3 DLY	2.0h	0 min, 5 min, 15 min, then 15 min intervals. Up to 4 hrs or OFF	COOLING STAGE 3 DELAY Delay after stage 2 cool has been active. Turns on second stage of cooling when economizer is first stage call and mechanical cooling is second stage call. Allows 3 stages of cooling, 1 economizer and 2 mechanical. OFF = no Stage 3 cooling
	SD DMPR POS	CLO	CLO or OPN	Indicates shutdown signal from space thermostat or unitary controller. When controller receives 24 vac input on the SD terminal in conventional mode, the OA damper will open if programmed for OPN and OA damper will close if programmed for CLO. All other controls, e.g., fans, etc. will shut off.
	DA LO ALM	45°F (7°C)	NONE 35°F to 65°F (2°C to 18°C); Increment by 5°F	Used for alarm for when the DA air temperature is too low. Set lower range of alarm, below this temperature the alarm will show on the display.

Table 10 — W7220 Menu Structure* (cont)

MENU	PARAMETER	PARAMETER DEFAULT VALUE	PARAMETER RANGE AND INCREMENT†	EXPANDED PARAMETER NAME Notes
ADVANCED SETUP (cont)	DA HI ALM	80°F (27°C)	NONE 70°F to 180°F (21°C to 82°C); Increment by 5°F	Used for alarm for when the DA air temperature is too high. Sets upper range of alarm; above this temperature, the alarm will show on the display.
	DCVCAL ENA	MAN	MAN (manual) AUTO	Turns on the DCV automatic control of the dampers. Resets ventilation based on the RA, OA, and MA sensor conditions. Requires all (RA, OA, MA, CO_2) sensors. This operation is not operable with a 2-speed fan unit.
	MAT T CAL	0.0°F	± 2.5°F	SUPPLY AIR TEMPERATURE CALIBRATION Allows for the operator to adjust for an out of calibration temperature sensor.
	OAS T CAL	0.0°F	± 2.5°F	OUTSIDE AIR TEMPERATURE CALIBRATION Allows for the operator to adjust for an out of calibration temperature sensor.
	OA H CAL	0% RH	±10% RH	OUTSIDE AIR HUMIDITY CALIBRATION Allows for operator to adjust for an out of calibration humidity sensor.
	RA T CAL	0.0°F	± 2.5°F	RETURN AIR TEMPERATURE CALIBRATION Allows for the operator to adjust for an out of calibration temperature sensor.
	RA H CAL	0% RH	±10% RH	RETURN AIR HUMIDITY CALIBRATION Allows for operator to adjust for an out of calibration humidity sensor.
	DA T CAL	0.0°F	± 2.5°F	DISCHARGE AIR TEMPERATURE CALIBRATION Allows for the operator to adjust for an out of calibration temperature sensor.
	2SP FAN DELAY	5 Minutes	0 to 20 minutes in 1 minute increments	TIME DELAY ON SECOND STAGE ECONOMIZING When in economizing mode, this is the delay for the high speed fan to try to satisfy the call for second stage cooling before the first stage mechanical cooling is enabled.
CHECKOUT***	DAMPER MINIMUM POSITION	N/A	N/A	The checkout for the damper minimum position is based on the system. See Table 11.
	DAMPER OPEN	N/A	N/A	Position damper to the full open position. Exhaust fan contacts enable during the DAMPER OPEN test. Make sure to pause in the mode to allow exhaust contacts to energize due to the delay in the system.
	DAMPER CLOSE	N/A	N/A	Positions damper to the fully closed position
	CONNECT Y1–O	N/A	N/A	Closes the Y1-O relay (Y1-O)
	CONNECT Y2–O	N/A	N/A	Closes the Y2-O relay (Y2-O)
	CONNECT AUX1–O	N/A	N/A	Energizes the AUX output. If Aux setting is: • NONE — no action taken • ERV — 24 vac out. Turns on or signals an ERV that the conditions are not good for economizing but are for ERV operation.†† • SYS — 24 vac out. Issues a system alarm
	CONNECT EXH1	N/A	N/A	Closes the power exhaust fan 1 relay (EXH1)
ALARMS	Alarms display only when they are active. The menu title “ALARMS(#)” includes the number of active alarms in parenthesis ( ). When using SYLK bus sensors, “SYLK” will appear on the screen, and when using 20k OA temperature sensors, “SENS T” will appear on the screen			
	MA T SENS ERR	N/A	N/A	SUPPLY AIR TEMPERATURE SENSOR ERROR Mixed air sensor has failed or become disconnected - check wiring, then replace sensor if the alarm continues.
	CO2 SENS ERR	N/A	N/A	CO_2 SENSOR ERROR CO_2 sensor has failed, gone out of range or become disconnected - check wiring then replace sensor if the alarm continues.
	OA SYLK T ERR	N/A	N/A	OUTSIDE AIR S-BUS SENSOR ERROR Outdoor air enthalpy sensor has failed or become disconnected - check wiring, then replace sensor if the alarm continues.
	OA SYLK H ERR	N/A	N/A	
	RA SYLK T ERR	N/A	N/A	RETURN AIR S-BUS SENSOR ERROR Return air enthalpy sensor has failed or become disconnected - check wiring, then replace sensor if the alarm continues.
	RA SYLK H ERR	N/A	N/A	
	DA SYLK T ERR	N/A	N/A	DISCHARGE AIR S-BUS SENSOR ERROR Discharge air sensor has failed or become disconnected - check wiring, then replace sensor if the alarm continues.
	OA SENS T ERR	N/A	N/A	OUTSIDE AIR TEMPERATURE SENSOR ERROR Outdoor air temperature sensor has failed or become disconnected - check wiring, then replace if the alarm continues.
	ACT ERROR	N/A	N/A	ACTUATOR ERROR Actuator has failed or become disconnected - check for stall, over voltage, under voltage and actuator count. Replace actuator if damper is movable and supply voltage is between 21.6 V and 26.4 V. Check actuator count on STATUS menu.

Table 10 — W7220 Menu Structure* (cont)

MENU	PARAMETER	PARAMETER DEFAULT VALUE	PARAMETER RANGE AND INCREMENT†	EXPANDED PARAMETER NAME Notes
ALARMS (cont)	FREEZE ALARM	N/A	N/A	Check if outdoor temperature is below the LOW Temp Lockout on set point menu. Check if Mixed air temperature on STATUS menu is below the Lo Set point on Advanced menu. When conditions are back in normal range, the alarm will go away.
	SHUTDOWN ACTIVE	N/A	N/A	AUX2 IN is programmed for SHUTDOWN and 24 V has been applied to AUX2 IN terminal.
	DMP CAL RUNNING	N/A	N/A	DAMPER CALIBRATION ROUTINE RUNNING If DCV Auto enable has been programmed, this alarm will display when the W7220 is completing a calibration on the dampers. Wait until the calibration is completed and the alarm will go away. Must have OA, MA and RA sensors for DCV calibration; set up is in the Advanced setup menu.
	DA SENS ALM	N/A	N/A	DISCHARGE AIR TEMPERATURE SENSOR ALARM Discharge air temperature is out of the range set in the ADVANCED SETUP Menu. Check the temperature of the discharge air.
	SYS ALARM	N/A	N/A	When AUX1-O is set to SYS and there is any alarm (e.g., failed sensors, etc.), the AUX1-O terminal has 24 vac out.
	ACT UNDER V	N/A	N/A	ACTUATOR VOLTAGE LOW Voltage received by actuator is above expected range.
	ACT OVER V	N/A	N/A	ACTUATOR VOLTAGE HIGH Voltage received by actuator is below expected range.
	ACT STALLED	N/A	N/A	ACTUATOR STALLED Actuator stopped before achieving commanded position.

LEGEND

CLO — Compressor Lockout
ERV — Energy Recovery Ventilator
LCD — Liquid Crystal Display
MA — Mixed Air
MAT — Mixed Air Temperature
N/A — Not Applicable
OA — Outdoor Air
OAT — Outdoor Air Temperature
OCC — Occupied
RA — Return Air
RAT — Return Air Temperature
RTU — Rooftop Unit
SYS — System

* Table 10 illustrates the complete hierarchy. Your menu parameters may be different depending on your configuration. For example, if you do not have a DCV (CO_2) sensor, then none of the DCV parameters appear.
† When values are displayed, pressing and holding the ▲ or ▼ button causes the display to automatically increment.
** N/A = Not Applicable.
†† ERV Operation: When in cooling mode AND the conditions are NOT OK for economizing - the ERV terminal will be energized. In the Heating mode, the ERV terminal will be energized when the OA is below the ERV OAT set point in the set point menu.
*** After 10 minutes without a command or mode change, the controller will change to normal operation.

NOTES:

1. STATUS —> OCCUPIED — The factory-standard Occupancy signal originates with a thermostat or other controller call for indoor fan operation at CTB terminal G. This signal passes through the Central Terminal Board's OCCUPANCY jumper to the ECONO connector and to the W7220's OCC input terminal. An external timeclock or relay is required to implement an Occupancy schedule on the economizer damper position.
2. STATUS —> MA TEMP, SETPOINTS —> MAT SET — The W7220 menu parameters and labels include designations MA, MAT and Mixed Air for the economizer cooling control sensor. On these rooftop units, the economizer control sensor is located downstream of the evaporator/indoor coil in the supply fan section where this sensor is designated as Supply Air Temperature (SAT) sensor.
3. SETPOINTS —> DRYBLB SET — This point is not displayed if a Return Air (differential) temperature sensor or an Outdoor Air enthalpy sensor is connected.
4. SYSTEM SETUP parameters must be configured as noted for 2-Speed unit operation:
   EQUIPMENT = CONV
   AUX2 I = W
   FAN SPEED = 2SPEED

For damper minimum position settings and checkout menu readings, see Table 11. For dry bulb operation with a one-speed fan, with or without DCV, see Tables 12 and 13. For enthalpy operation with a 1-speed fan, with or without DCV see Tables 14 and 15. For dry bulb operation with a 2 speed indoor fan, with or without DCV, see Tables 16 and 17. For enthalpy operation with a 2 speed indoor fan, with or without DCV, see Tables 18 and 19. For enthalpy set point values, see Table 20.

Table 11 — Damper Minimum Position Settings and Readings on Checkout Menu

DEMAND CONTROLLED VENTILATION (CO_2 SENSOR)	FAN SPEED	SETPOINTS	CHECKOUT
NO	1	MIN POS	VMAX–HS
		N/A	N/A
	2	MIN POS H	VMAX–HS
		MIN POS L	VMAX–LS
YES	1	VENT MIN	VMAX–HS
		VENT MAX	VMAX–HS
	2	VENT MIN H	VMAX–HS
		VENT MAX H	VMAX–LS
		VENT MIN L	N/A
		VENT MAX L	N/A

Table 12 — Dry Bulb Operation without DCV (CO_2 Sensor) — One-Speed Fan

DEMAND CONTROLLED VENTILATION (DCV)	OUTSIDE AIR GOOD TO ECONOMIZE	Y1-I	Y2-I	FAN SPEED	Y1-O	Y2-O	OCCUPIED	UNOCCUPIED
NONE	No	Off	Off	High	0 v/Off	0 v/Off	MIN POS	Closed
		On	Off	High	24 v/On	0 v/Off	MIN POS	Closed
		On	On	High	24 v/On	24 v/On	MIN POS	Closed
	Yes	Off	Off	High	0 v/Off	0 v/Off	MIN POS	Closed
		On	Off	High	0 v/Off	0 v/Off	MIN POS to Full-Open	Closed to Full-Open
		On	On	High	24 v/On	0 v/Off*	MIN POS to Full-Open	Closed to Full-Open

*With stage 3 delay (STG3 DLY) in Advanced setup menu can turn on second stage of mechanical cooling Y2–O after the delay if the call for Y–I and Y2–I have not been satisfied.

Table 13 — Dry Bulb Operation with DCV (CO_2 Sensor) — One-Speed Fan

DEMAND CONTROLLED VENTILATION (DCV)	OUTSIDE AIR GOOD TO ECONOMIZE	Y1-I	Y2-I	FAN SPEED	Y1-O	Y2-O	OCCUPIED	UNOCCUPIED
Below CO_2 set	No	Off	Off	High	0 v/Off	0 v/Off	VENTMIN	Closed
		On	Off	High	24 v/On	0 v/Off	VENTMIN	Closed
		On	On	High	24 v/On	24 v/On	VENTMIN	Closed
	Yes	Off	Off	High	0 v/Off	0 v/Off	VENTMIN	Closed
		On	Off	High	0 v/Off	0 v/Off	VENTMIN to Full-Open	Closed to Full-Open
		On	On	High	24 v/On	0 v/Off*	VENTMIN to Full-Open	Closed to Full-Open
Above CO_2 set	No	Off	Off	High	0 v/Off	0 v/Off	VENTMIN to VENTMAX	Closed
		On	Off	High	24 v/On	0 v/Off	VENTMIN to VENTMAX	Closed
		On	On	High	24 v/On	24 v/On	VENTMIN to VENTMAX	Closed
	Yes	Off	Off	High	0 v/Off	0 v/Off	VENTMIN to VENTMAX	Closed
		On	Off	High	0 v/Off	0 v/Off	VENTMIN to Full-Open	Closed to Full-Open
		On	On	High	24 v/On	0 v/Off*	VENTMIN to Full-Open	Closed to Full-Open

*With stage 3 delay (STG3 DLY) in Advanced setup menu can turn on second stage of mechanical cooling Y2–O after the delay if the call for Y–I and Y2–I have not been satisfied.

Table 14 — Enthalpy Operation without DCV (CO_2 Sensor) — One-Speed Fan

DEMAND CONTROLLED VENTILATION (DCV)	OUTSIDE AIR GOOD TO ECONOMIZE	Y1-I	Y2-I	FAN SPEED	Y1-O	Y2-O	OCCUPIED	UNOCCUPIED
NONE	No	Off	Off	High	0 v/Off	0 v/Off	MIN POS	Closed
		On	Off	High	24 v/On	0 v/Off	MIN POS	Closed
		On	On	High	24 v/On	24 v/On	MIN POS	Closed
	Yes	Off	Off	High	0 v/Off	0 v/Off	MIN POS	Closed
		On	Off	High	0 v/Off	0 v/Off	MIN POS to Full-Open	Closed to Full-Open
		On	On	High	24 v/On	0 v/Off*	MIN POS to Full-Open	Closed to Full-Open

*With stage 3 delay (STG3 DLY) in Advanced setup menu can turn on second stage of mechanical cooling Y2–O after the delay if the call for Y–I and Y2–I have not been satisfied.

Table 15 — Enthalpy Operation with DCV (CO_2 Sensor) — One-Speed Fan

DEMAND CONTROLLED VENTILATION (DCV)	OUTSIDE AIR GOOD TO ECONOMIZE	Y1-I	Y2-I	FAN SPEED	Y1-O	Y2-O	OCCUPIED	UNOCCUPIED
Below CO_2 set	No	Off	Off	High	0 v/Off	0 v/Off	VENTMIN	Closed
		On	Off	High	24 v/On	0 v/Off	VENTMIN	Closed
		On	On	High	24 v/On	24 v/On	VENTMIN	Closed
	Yes	Off	Off	High	0 v/Off	0 v/Off	VENTMIN	Closed
		On	Off	High	0 v/Off	0 v/Off	VENTMIN to Full-Open	Closed to Full-Open
		On	On	High	24 v/On	0 v/Off†	VENTMIN to Full-Open	Closed to Full-Open
Above CO_2 set	No	Off	Off	High	0 v/Off	0 v/Off	VENTMIN to VENTMAX	Closed
		On	Off	High	24 v/On	0 v/Off	VENTMIN L to VENTMAX	Closed
		On	On	High	24 v/On	24 v/On	VENTMIN H to VENTMAX	Closed
	Yes	Off	Off	High	0 v/Off	0 v/Off	VENTMIN L to VENTMAX	Closed
		On	Off	High	0 v/Off	0 v/Off	VENTMIN to Full-Open	Closed to Full-Open
		On	On	High	DELAY* 24 v/On	0 v/Off†	VENTMIN to Full-Open	Closed to Full-Open

*With 2SP FAN DELAY (Advanced Setup Menu) when in the economizing mode there is a delay for the high speed fan to try to satisfy the call for second stage cooling by turning on the fan to high and opening the OA damper 100% before the first stage mechanical cooling is enabled.
†With stage 3 delay (STG3 DLY) in Advanced setup menu can turn on second stage of mechanical cooling Y2–O after the delay if the call for Y–I and Y2–I have not been satisfied.

Table 16 — Dry Bulb Operation without DCV (CO_2 Sensor) — 2-Speed Fan

DEMAND CONTROLLED VENTILATION (DCV)	OUTSIDE AIR GOOD TO ECONOMIZE	Y1-I	Y2-I	FAN SPEED	Y1-O	Y2-O	OCCUPIED	UNOCCUPIED
NONE	No	Off	Off	Low	0 v/Off	0 v/Off	MIN POS L	Closed
		On	Off	Low	24 v/On	0 v/Off	MIN POS L	Closed
		On	On	High	24 v/On	24 v/On	MIN POS H	Closed
NONE	Yes	Off	Off	Low	0 v/Off	0 v/Off	MIN POS L	Closed
		On	Off	Low	0 v/Off	0 v/Off	MIN POS L to Full-Open	Closed to Full-Open
		On	On	High	DELAY* 24 v/On	0 v/Off†	MIN POS H to Full-Open	Closed to Full-Open

*With 2SP FAN DELAY (Advanced Setup Menu) when in the economizing mode there is a delay for the high speed fan to try to satisfy the call for second stage cooling by turning on the fan to high and opening the OA damper 100% before the first stage mechanical cooling is enabled.
†With stage 3 delay (STG3 DLY) in Advanced setup menu can turn on second stage of mechanical cooling Y2–O after the delay if the call for Y–I and Y2–I have not been satisfied.

Table 17 — Dry Bulb Operation with DCV (CO_2 Sensor) — 2-Speed Fan

DEMAND CONTROLLED VENTILATION (DCV)	OUTSIDE AIR GOOD TO ECONOMIZE	Y1-I	Y2-I	FAN SPEED	Y1-O	Y2-O	OCCUPIED	UNOCCUPIED
Below CO_2 Set	No	OFF	OFF	LOW	0v/Off	0v/Off	VENTMIN	Closed
		ON	OFF	LOW	24v/On	0v/Off	VENTMIN	Closed
		ON	ON	HIGH	24v/On	24v/On	VENTMIN	Closed
	Yes	OFF	OFF	LOW	0v/Off	0v/Off	VENTMIN	Closed
		ON	OFF	LOW	0v/Off	0v/Off	VENTMIN to Full-Open	Closed to Full-Open
		ON	ON	HIGH	24v/On	0v/Off	VENTMIN to Full-Open	Closed to Full-Open
Above CO_2 Set	No	OFF	OFF	LOW	0v/Off	0v/Off	VENTMIN to VENTMAX	Closed
		ON	OFF	LOW	24v/On	0v/Off	VENTMIN to VENTMAX	Closed
		ON	ON	HIGH	24v/On	24v/On	VENTMIN to VENTMAX	Closed
	Yes	OFF	OFF	LOW	0v/Off	0v/Off	VENTMIN to VENTMAX	Closed
		ON	OFF	LOW	0v/Off	0v/Off	VENTMIN to Full-Open	Closed to Full-Open
		ON	ON	HIGH	DELAY* 24v/On	0v/Off†	VENTMIN to Full-Open	Closed to Full-Open

*With 2SP FAN DELAY (Advanced Setup Menu) when in the economizing mode there is a delay for the high speed fan to try to satisfy the call for second stage cooling by turning on the fan to high and opening the OA damper 100% before the first stage mechanical cooling is enabled.

†With stage 3 delay (STG3 DLY) in Advanced setup menu can turn on second stage of mechanical cooling Y2–O after the delay if the call for Y1–I and Y2–I have not been satisfied.

Table 18 — Enthalpy Operation without DCV (CO_2 Sensor) — 2-Speed Fan

DEMAND CONTROLLED VENTILATION (DCV)	OUTSIDE AIR GOOD TO ECONOMIZE	Y1-I	Y2-I	FAN SPEED	Y1-O	Y2-O	OCCUPIED	UNOCCUPIED
NO CO_2 SENSOR	NO	OFF	OFF	LOW	0v/Off	0v/Off	MIN POS	Closed
		ON	OFF	LOW	24v/On	0v/Off	MIN POS	Closed
		ON	ON	HIGH	24v/On	24v/On	MIN POS	Closed
	YES	OFF	OFF	LOW	0v/Off	0v/Off	MIN POS	Closed
		ON	OFF	LOW	0v/Off	0v/Off	MIN POS to Full Open	Closed to Full-Open
		ON	ON	HIGH	DELAY* 24v/On	0v/Off†	MIN POS to Full Open	Closed to Full-Open

*With 2SP FAN DELAY (Advanced Setup Menu) when in the economizing mode there is a delay for the high speed fan to try to satisfy the call for second stage cooling by turning on the fan to high and opening the OA damper 100% before the first stage mechanical cooling is enabled.

†With stage 3 delay (STG3 DLY) in Advanced setup menu can turn on second stage of mechanical cooling Y2–O after the delay if the call for Y1–I and Y2–I have not been satisfied.

Table 19 — Enthalpy Operation with DCV (CO_2 Sensor) — 2-Speed Fan

DEMAND CONTROLLED VENTILATION (DCV)	OUTSIDE AIR GOOD TO ECONOMIZE	Y1-I	Y2-I	FAN SPEED	Y1-O	Y2-O	OCCUPIED	UNOCCUPIED
Below CO_2 Set	No	OFF	OFF	LOW	0v/Off	0v/Off	VENTMIN	Closed
		ON	OFF	LOW	24v/On	0v/Off	VENTMIN	Closed
		ON	ON	HIGH	24v/On	24v/On	VENTMIN	Closed
	Yes	OFF	OFF	LOW	0v/Off	0v/Off	VENTMIN	Closed
		ON	OFF	LOW	0v/Off	0v/Off	VENTMIN to Full-Open	Closed to Full-Open
		ON	ON	HIGH	24v/On	0v/Off	VENTMIN to Full-Open	Closed to Full-Open
Above CO_2 Set	No	OFF	OFF	LOW	0v/Off	0v/Off	VENTMIN to VENTMAX	Closed
		ON	OFF	LOW	24v/On	0v/Off	VENTMIN to VENTMAX	Closed
		ON	ON	HIGH	24v/On	24v/On	VENTMIN to VENTMAX	Closed
	Yes	OFF	OFF	LOW	0v/Off	0v/Off	VENTMIN to VENTMAX	Closed
		ON	OFF	LOW	0v/Off	0v/Off	VENTMIN to Full-Open	Closed to Full-Open
		ON	ON	HIGH	DELAY* 24v/On	0v/Off*	VENTMIN to Full-Open	Closed to Full-Open

*With 2SP FAN DELAY (Advanced Setup Menu) when in the economizing mode there is a delay for the high speed fan to try to satisfy the call for second stage cooling by turning on the fan to high and opening the OA damper 100% before the first stage mechanical cooling is enabled.

†With stage 3 delay (STG3 DLY) in Advanced setup menu can turn on second stage of mechanical cooling Y2–O after the delay if the call for Y1–I and Y2–I have not been satisfied.

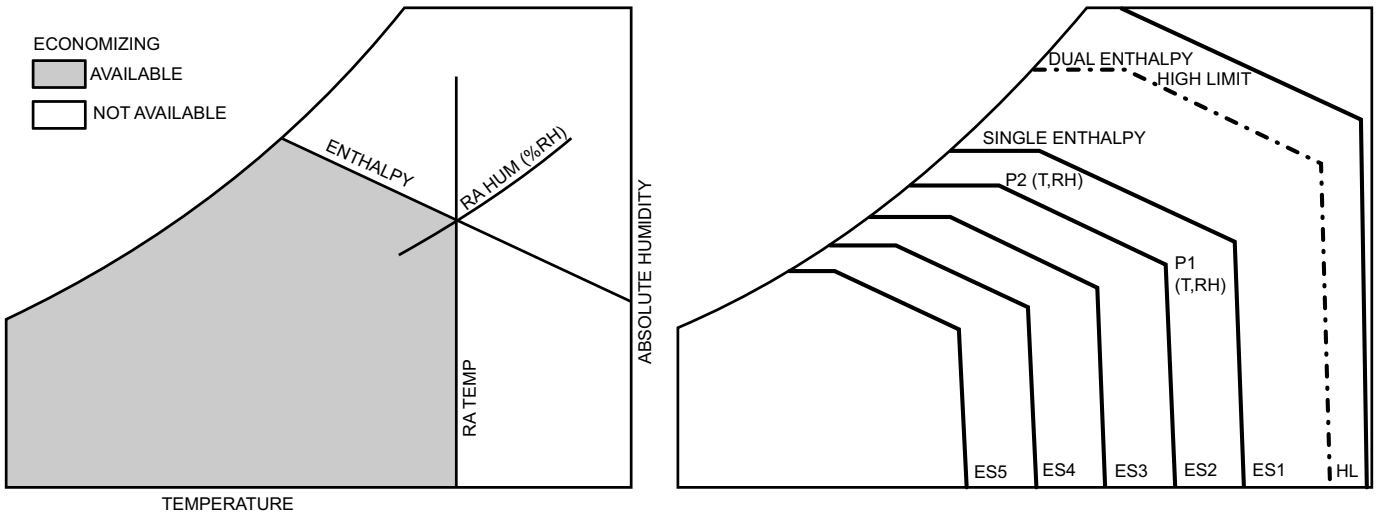

Fig. 52 — Single Enthalpy Curve Boundaries

Table 20 — Single Enthalpy and Dual Enthalpy High Limit Curves

ENTHALPY CURVE	TEMP. DRY BULB (°F)	TEMP. DEWPOINT (°F)	ENTHALPY (btu/lb/da)	POINT P1		POINT P2	
				TEMP. (°F)	HUMIDITY (%RH)	TEMP. (°F)	HUMIDITY (%RH)
ES1	80	60	28.0	80	36.8	66.3	80.1
ES2	75	57	26.0	75	39.6	63.3	80.0
ES3	70	54	24.0	70	42.3	59.7	81.4
ES4	65	51	22.0	65	44.8	55.7	84.2
ES5	60	48	20.0	60	46.9	51.3	88.5
HL	86	66	32.4	86	38.9	72.4	80.3

ENTHALPY SETTINGS

When the OA temperature, enthalpy and dew point are below the respective set points, the Outdoor Air can be used for economizing. Figure 52 shows the new single enthalpy boundaries in the W7220. There are 5 boundaries (set points ES1 through ES5), which are defined by dry bulb temperature, enthalpy and dew point.

Refer to Table 20 for ENTH CURVE set point values.

The W7220 calculates the enthalpy and dew point using the OA temperature and humidity input from the OA enthalpy sensor. When the OA temperature, OA humidity and OA dew point are all below the selected boundary, the economizer sets the economizing mode to YES, economizing is available.

When all of the OA conditions are above the selected boundary, the conditions are not good to economize and the mode is set to NO.

Figure 52 shows the 5 current boundaries. There is also a high limit boundary for differential enthalpy. The high limit boundary is ES1 when there are no stages of mechanical cooling energized and HL (high limit) when a compressor stage is energized.

TWO-SPEED FAN OPERATION

NOTE: Two-Speed Fan operation applies to size 07 models only.

The W7220 controller has the capability to work with a system using a 2-speed supply fan. The W7220 does not control the supply directly but uses the following input status to determine the speed of the supply fan and controls the OA damper to the required position, see Table 21.

Table 21 — Fan Speed

STATE	FAN SPEED
OCC	Low
Y1	Low
Y2	High
W	High

The W (heating mode) is not controlled by the W7220 but it requires the status to know where to position the OA damper for minimum position for the fan speed.

The 2 speed fan delay is available when the system is programmed for 2 speed fan (in the System Setup menu item). The 2 speed fan delay is defaulted to 5 minutes and can be changed in the Advanced Setup menu item. When the unit has a call for Y1 In and in the free cooling mode and there is a call for Y2 In, the 2-speed fan delay starts and the OA damper will modulate 100% open, the supply fan should be set to high speed by the unit controller.

After the delay one of 2 actions will happen:

- The Y2 In call will be satisfied with the damper 100% open and fan on high speed and the call will turn off

OR

- If the call for additional cooling in the space has not been satisfied then the first stage of mechanical cooling will be enabled through Y1 Out or Y2 Out.

CHECKOUT

Inspect all wiring connections at the economizer module's terminals, and verify compliance with the installation wiring diagrams. For checkout, review the Status of each configured parameter and perform the Checkout tests.

NOTE: For information about menu navigation and use of the keypad, see Interface Overview on page 33.

Power Up

After the W7220 module is mounted and wired, apply power.

Initial Menu Display

On initial start up, Honeywell displays on the first line and economizer W7220 on the second line. After a brief pause, the revision of the software appears on the first line and the second line will be blank.

Power Loss (Outage or Brownout)

All set points and advanced settings are restored after any power loss or interruption.

NOTE: All settings are stored in non-volatile flash memory.

Status

Use the Status menu (see Table 10) to check the parameter values for the various devices and sensors configured.

NOTE: For information about menu navigation and use of the keypad, see Interface Overview on page 33.

Checkout Tests

Use the Checkout menu (see page 38) to test the damper operation and any configured outputs. Only items that are configured are shown in the Checkout menu.

NOTE: For information about menu navigation and use of the keypad, see Interface Overview on page 33.

To perform a Checkout test:

1. Scroll to the desired test in the Checkout menu using the ▲ and ▼ buttons.
2. Press the ↵ (Enter) button to select the item. RUN? appears.
3. Press the ↵ (Enter) button to start the test. The unit pauses and then displays IN PROGRESS. When the test is complete, DONE appears.
4. When all desired parameters have been tested, press the ⓐ (Menu Up) button to end the test.

The Checkout tests can all be performed at the time of installation or at any time during the operation of the system as a test that the system is operable.

⚠ CAUTION

EQUIPMENT DAMAGE HAZARD

Failure to follow this caution may result in equipment damage.

Be sure to allow enough time for compressor start-up and shutdown between checkout tests so that you do not short-cycle the compressors.

TROUBLESHOOTING

Alarms

The economizer module provides alarm messages that display on the 2-line LCD.

NOTE: Upon power up, the module waits 60 minutes before checking for alarms. This allows time for all the configured devices (e.g. sensors, actuator) to become operational. The exception is the SAT sensor which will alarm immediately.

If one or more alarms are present and there has been no keypad activity for at least 5 minutes, the Alarms menu displays and cycles through the active alarms.

You can also navigate to the Alarms menu at any time.

Clearing Alarms

Once the alarm has been identified and the cause has been removed (e.g. replaced faulty sensor) the alarm can be cleared from the display.

To clear an alarm, perform the following:

1. Navigate to the desired alarm.
2. Press the ↵ (Enter) button. ERASE? displays.
3. Press the ↵ (Enter) button. ALARM ERASED displays.
4. Press the ⓐ (Menu up/Exit) button to complete the action and return to the previous menu.

NOTE: If the alarm still exists after clearing it, it is redisplayed within 5 seconds.

RTU Open Controller (Factory Option)

For details on operating 50FCQ*04-07 units equipped with the factory-installed RTU Open controller option refer to the *Factory-Installed Option RTU Open Multi-Protocol Controller Controls, Start-Up, Operation and Troubleshooting* manual.

SystemVu™ Controller (Factory Option)

For details on operating 50FCQ*04-07 units equipped with the factory-installed SystemVu controller option refer to the *FCQ/GCQ Series Single Package Rooftop Units with SystemVu Controller Controls, Start-up, Operation and Troubleshooting* manual.

Controller Options

LOW AMBIENT

If the unit comes with Electro-Mechanical (EM) control, then no adjustment is necessary.

If the unit comes with SystemVu or RTU Open controller option, then refer to its installation control manual for details on adjusting "Cooling Lock-Out" setting and configure for the specific job requirements.

Smoke Detectors

Smoke detectors are available as factory-installed options on 50FCQ models. Smoke detectors may be specified for Supply Air only or for Return Air without or with economizer, or in combination of Supply Air and Return Air. Return Air smoke detectors are arranged for vertical return configurations only. All components necessary for operation are factory-provided and mounted. The unit is factory-configured for immediate smoke detector shutdown operation; additional wiring or modifications to unit terminal board may be necessary to complete the unit and smoke detector configuration to meet project requirements.

Units equipped with factory-optional Return Air smoke detectors require a relocation of the sensor module at unit installation. See Fig. 53 for the as-shipped location.

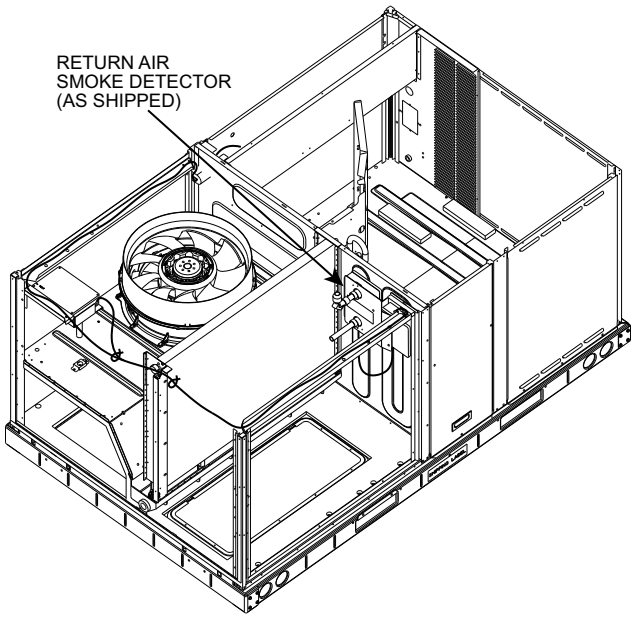

Fig. 53 — Return Air Smoke Detector, Shipping Position

COMPLETING RETURN AIR SMOKE SENSOR INSTALLATION

1. Unscrew the 2 screws holding the Return Air Smoke Detector assembly. See Fig. 54, Step 1. Save the screws.
2. Turn the assembly 90 degrees and then rotate end to end. Make sure that the elbow fitting is pointing down. See Fig. 54, Step 2.
3. Screw the sensor and detector plate into its operating position using screws from Step 1. See Fig. 54, Step 3.
4. Connect the flexible tube on the sampling inlet to the sampling tube on the basepan.

ADDITIONAL APPLICATION DATA

Refer to the application data document "Factory Installed Smoke Detectors for Small and Medium Rooftop Units 2 to 25 Tons" for discussions on additional control features of these smoke detectors including multiple unit coordination.

Step 12 — Adjust Factory-Installed Options

SMOKE DETECTORS

Smoke detector(s) will be connected at the Unit Control Board (UCB), at terminals marked "Smoke Shutdown." Detach the jumper covering the Smoke Shutdown terminals on the UCB and then attach the wiring harness from the smoke detector.

ECONOMI$ER IV OCCUPANCY SWITCH

See Fig. 55 on page 46 for general EconoMi$er® IV wiring. External occupancy control is managed through a connection on the Unit Control Board.

If external occupancy control is desired, connect a time clock or remotely controlled switch (closed for Occupied, open for Unoccupied sequence) at terminals marked OCCUPANCY. Detach the jumper covering the "Occupancy" terminals on the UCB and then attach the required connections.

Step 13 — Install Accessories

Available accessories include:

- Roof curb
- Thru-base connection kit (must be installed before unit is set on curb)
- Manual outside air damper
- Two-Position motorized outside air damper
- EconoMi$er IV (with control and integrated barometric relief)
- EconoMi$er2 (without control/for external signal and integrated barometric relief)
- Power exhaust
- Differential dry-bulb sensor (EconoMi$er IV)
- Outdoor enthalpy sensor
- Differential enthalpy sensor
- Electric heaters
- Single point kits
- Low Ambient Controls
- Thermostat / Sensors
- CO_2 sensor
- Louvered hail guard
- Phase monitor control

Refer to separate installation instructions for information on installing these accessories.

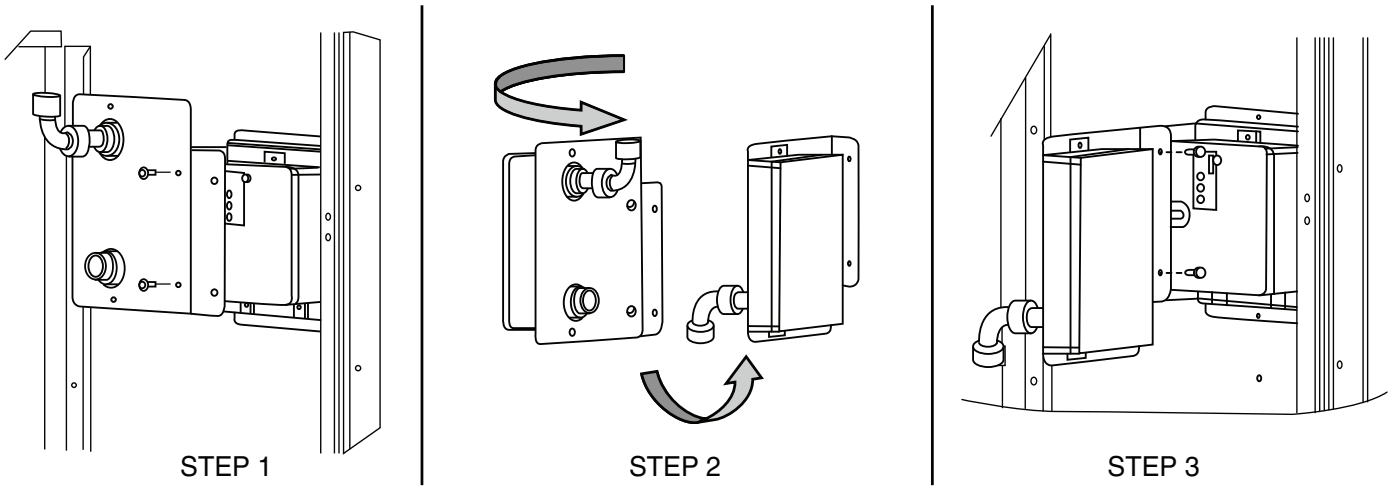

Fig. 54 — Completing Installation of Return Air Smoke Sensor

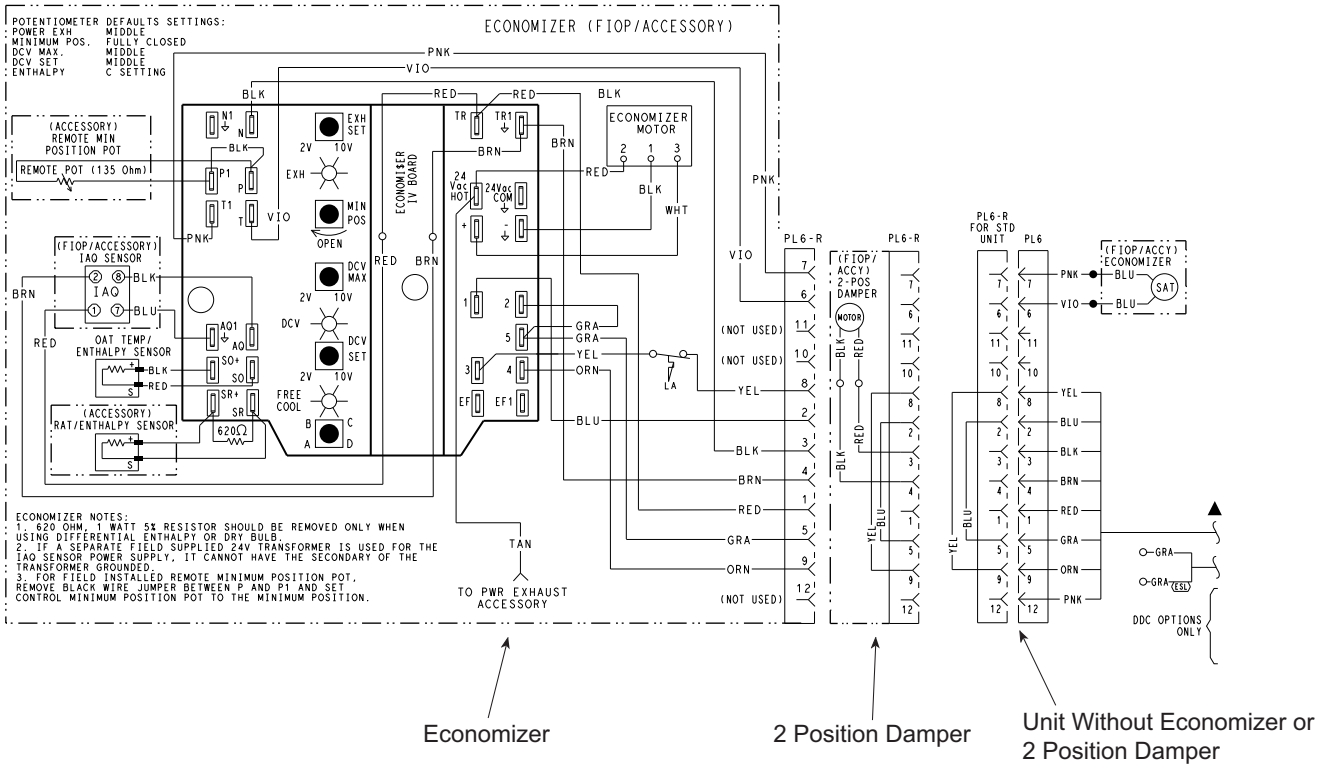

Fig. 55 — EconoMi$er® IV Wiring

Step 14 — Fan Speed Set Up

UNITS WITH ELECTRO-MECHANICAL CONTROLS

The Fan Speed set up controls are located on the lower section of the Unit Control Board (UCB). See Fig. 56 for location.

1. Check the job specifications for the CFM (cubic feet per minute) and ESP (external static pressure) required.
2. Using the chart on the Fan Speed Set Up labels (see Fig. 57), calculate the Vdc from the CFM and ESP for the base unit plus any field accessories (as listed on the label).

NOTE: The Fan Speed Set Up labels are located on the High Voltage cover in the Control Box.

3. Connect a multimeter to the Vdc terminals on the UCB.
4. Set the Range Switch to either A, B, or C per the Switch Range table.
5. Using a straight blade screwdriver turn the Vdc control dial to fine tune the Vdc reading.
6. Record the reading in the Field Setting field.

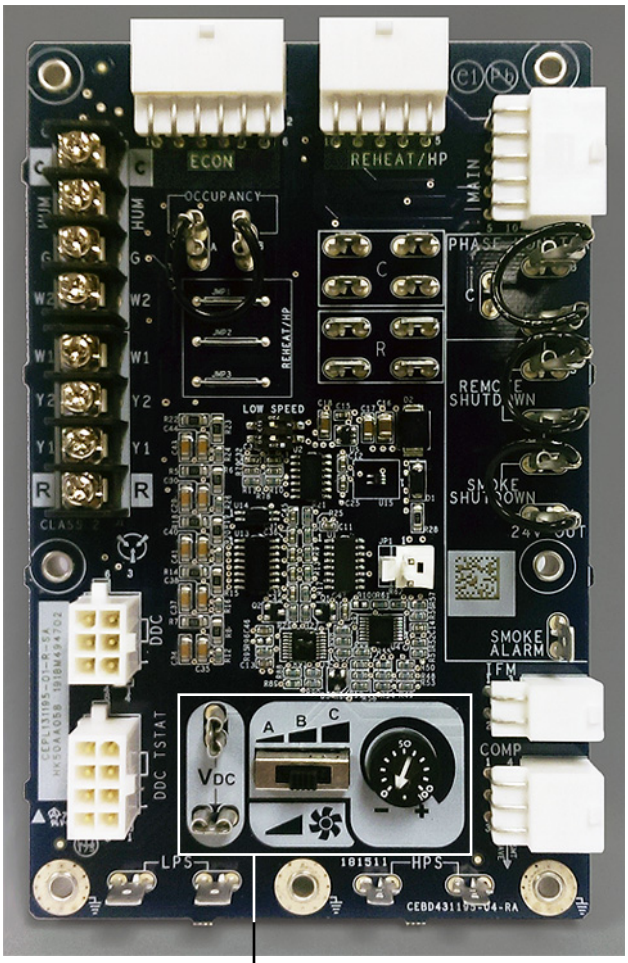

FAN SPEED SET UP CONTROLS

Fig. 56 — UCB Fan Speed Controls

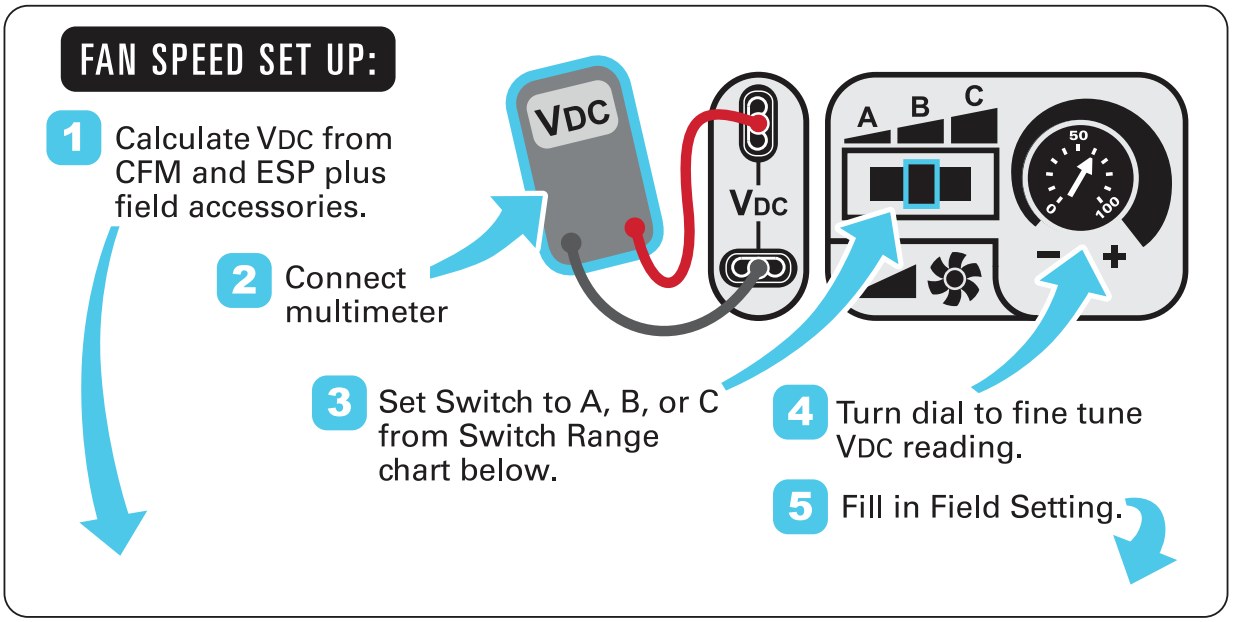

VDC Calculator

UNIT MODEL NUMBER CFM	ESP in. wg 0.2	0.4	0.6	0.8	1.0	1.2	1.4	1.6	1.8	2.0
1500	5.4	6.2	6.9	7.5	8.1	8.6	9.1	9.6		
1625	5.8	6.5	7.1	7.7	8.3	8.8	9.3	9.8		
1750	6.1	6.8	7.4	8.0	8.5	9.0	9.5	9.9		
1875	6.5	7.1	7.7	8.2	8.7	9.2	9.7			
2000	6.8	7.4	7.9	8.5	9.0	9.5	9.9			
2125	7.2	7.7	8.2	8.7	9.2	9.7				
2250	7.6	8.0	8.5	9.0	9.5	10.0				
2375	7.9	8.4	8.8	9.3	9.8					
2500	8.3	8.7	9.2	9.6						
Field Accessories:										
Economizer	0.1	0.1	0.1	0.1	0.1	0.1	0.1	0.1		
1 Stage E Heat	0.2	0.2	0.2	0.2	0.2	0.2	0.2	0.2		
2 Stage E Heat	0.3	0.3	0.3	0.3	0.3	0.3	0.3	0.3		

Factory Setting: 9.0 VDC

Field Setting:

Record field setting here

_____ VDC

Switch Range: *

A	4.1 - 7.5
B	6.9 - 8.7
C	7.7 - 10.0

* *Overlap in A, B, C switch range designed for maximum field adjustment potential. For example 7.2 can be set at either A or B.*

NOTE: Values in the Field Accessories section are VDC adders.

Fig. 57 — Example of Fan Speed Set Up Labels for Electro-Mechanical Controls

UNITS WITH SYSTEMVU™ CONTROLS

On units equipped with the factory-installed SystemVu controller the Fan Speed settings are accessed through the SystemVu interface.

1. Check the job specifications for the CFM (cubic feet per minute) and ESP (external static pressure) required.
2. Using the chart on the Fan Speed Set Up labels (see Fig. 58), calculate the RPM from the CFM and ESP for the base unit plus any field accessories (as listed on the label).

NOTE: The Fan Speed Set Up labels are located on the High Voltage cover in the Control Box.

3. Press any key on the SystemVu interface to activate the display backlight and then press the MENU key.
4. Using the UP and DOWN arrow keys highlight SETTINGS and then press ENTER.
5. Use the DOWN arrow key highlight the UNIT CONFIGURATIONS menu then press ENTER.
6. Highlight UNIT CONFIGURATIONS then press ENTER.
7. Highlight INDOOR FAN and then press ENTER.
8. Refer to the job specifications to set the following, determining the values per the RPM Calculator label (see Fig. 58). Use the UP and DOWN arrow keys and the BACK key to set the values. Press ENTER after setting each value to continue to the next selection.

- IDF VENT SPD
- IDF HEAT SPD
- IDF LOW COOL SPD
- IDF HIGH SPD
- IDF FREE COOL SPD

For further details see the *FCQ/GCQ Series Single Package Rooftop Units with SystemVu Controller Controls, Start-up, Operation and Troubleshooting* manual.

SystemVu™

MAIN MENU:

FAN SPEED SETUP (RPM)

SETTINGS
→ UNIT CONFIGURATIONS
→ INDOOR FAN
→ IDF VENT SPD -RPM
→ IDF HEAT SPD -RPM
→ IDF LOW COOL SPD -RPM
→ IDF HIGH COOL SPD -RPM
→ IDF FREE COOL SPD -RPM

↓ DETERMINE RPM FROM BELOW ↓

48TC003136 REV. A

RPM Calculator

UNIT MODEL NUMBER / CFM	ESP in. wg 0.2	0.4	0.6	0.8	1.0	1.2	1.4	1.6	1.8	2.0
1500	1301	1477	1639	1788	1925	2054	2174	2289		
1625	1381	1544	1699	1843	1976	2101	2220	2332		
1750	1463	1615	1763	1902	2031	2152	2268	2378		
1875	1548	1688	1828	1962	2087	2206	2318			
2000	1633	1764	1897	2025	2146	2262	2372			
2125	1720	1842	1967	2090	2208	2320				
2250	1808	1921	2040	2157	2271	2380				
2375	1897	2003	2115	2227	2336					
2500	1987	2068	2191	2298						
Field Accessories:										
Economizer	66	66	66	66	66	66	66	66		
1 Stage E Heat	80	80	80	80	80	80	80	80		
2 Stage E Heat	107	107	107	107	107	107	107	107		

NOTE: Values in the Field Accessories section are VDC adders.

Fig. 58 — Example of Fan Speed Set Up Labels for SystemVu™ Controls

Typical Unit Piping

Each heat pump refrigeration system includes a compressor, accumulator, reversing valve, dual-function outdoor coil with vapor header check valve, cooling liquid line with a filter drier and a check valve, dual-function indoor coil with a vapor header check valve, and heating liquid line with a check valve and a strainer. Unit sizes A04-06 have a single compressor-circuit. See Fig. 59 for one-stage cooling units (3 to 5 tons) or Fig. 60 for 2-stage cooling units (6 ton) and Tables 22-24 for typical unit piping schematic. Dual-function outdoor and indoor coils are designed to provide parallel coil circuits during evaporator-function operation and converging coil circuits during the condenser-function operation.

Table 22 — Cooling Mode

COMPONENT	STATUS/POSITION
Reversing Valve	Energized
Check Valve A	Closed
Check Valve B	Open
Check Valve C	Closed
Check Valve D	Open

Table 23 — Heating Mode

COMPONENT	STATUS/POSITION
Reversing Valve	De-energized
Check Valve A	Open
Check Valve B	Closed
Check Valve C	Open
Check Valve D	Closed

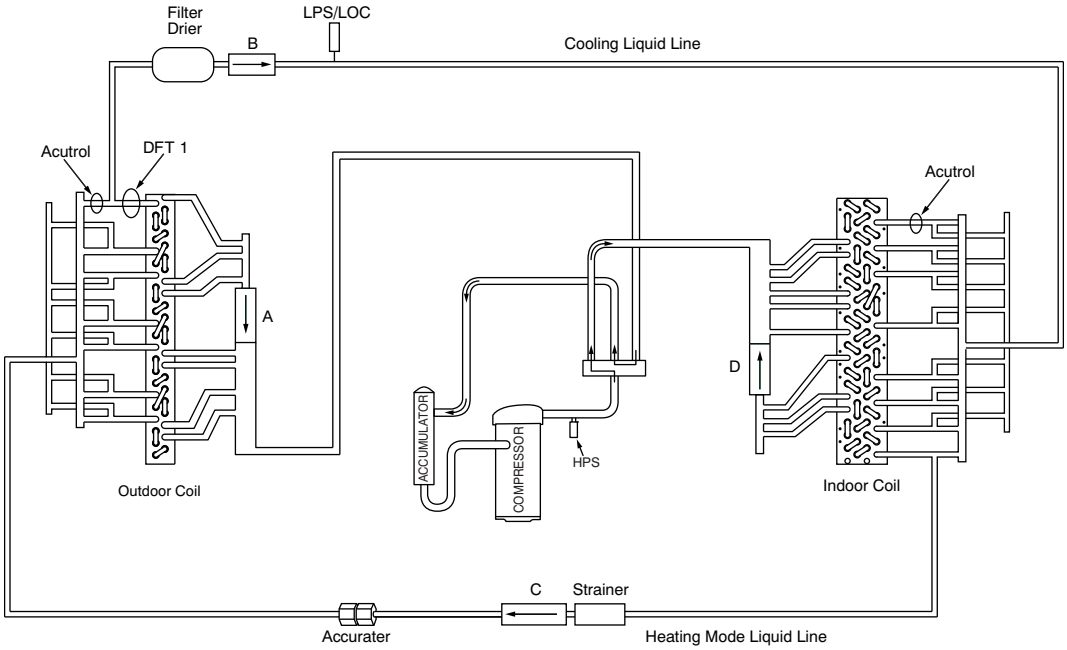

Fig. 59 — 50FCQ 04-06 Piping Schematic — One-Stage Cooling

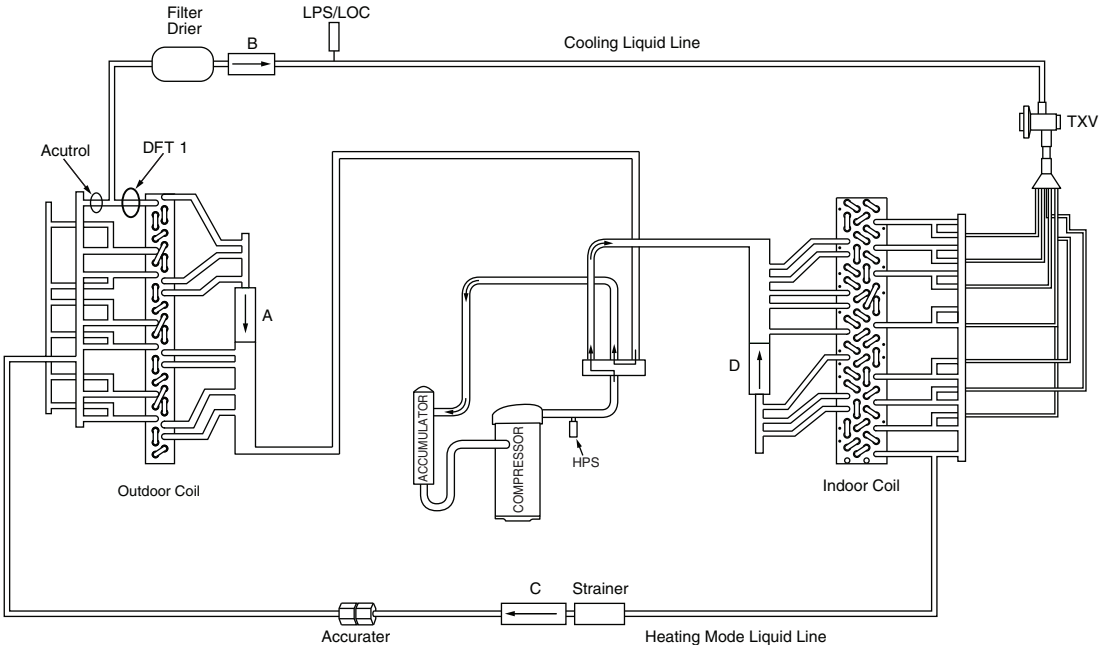

Fig. 60 — 50FCQ 07 Piping Schematic — Two-Stage Cooling, Single Circuit

Table 24 — Defrost Mode

COMPONENT	STATUS/POSITION
Defrost Thermostat	Closed
Outdoor Fan(s)	Off
Reversing Valve	Energized
Check Valve A	Closed
Check Valve B	Open
Check Valve C	Closed
Check Valve D	Open

Pre-Start and Start-Up

This completes the mechanical installation of the unit. Refer to the unit's Service Manual for detailed Pre-Start and Start-Up instructions. Download the latest versions from HVAC Partners (www.hvacpartners.com).

© 2021 Carrier

START-UP CHECKLIST

50FCQ04-07 Single Package Rooftop Heat Pump Units
(Remove and use for job file)

NOTE: To avoid injury to personnel and damage to equipment or property when completing the procedures listed in this start-up checklist, use good judgment, follow safe practices, and adhere to the safety considerations/information as outlined in preceding sections of this Installation Instruction document.

I. PRELIMINARY INFORMATION

MODEL NO _____

JOB NAME_____

SERIAL NO _____

ADDRESS _____

START-UP DATE_____

TECHNICIAN NAME _____

ADDITIONAL ACCESSORIES

_____

II. PRE-START-UP

Verify that all packaging materials have been removed from unit	(Y/N) _____
Verify installation of outdoor air hood	(Y/N) _____
Verify that condensate connection is installed per instructions	(Y/N) _____
Verify that all electrical connections and terminals are tight	(Y/N) _____
Check that indoor-air filters are clean and in place	(Y/N) _____
Check that outdoor air inlet screens are in place	(Y/N) _____
Verify that unit is level	(Y/N) _____
Verify that fan assembly is free of obstructions and rotor spins freely	(Y/N) _____
Verify that scroll compressors are rotating in the correct direction	(Y/N) _____
Verify installation of thermostat	(Y/N) _____

III. START-UP

ELECTRICAL

Supply Voltage	L1-L2_____	L2-L3_____	L3-L1_____
Compressor Amps 1	L1 _____	L2 _____	L3 _____
Compressor Amps 2	L1 _____	L2 _____	L3 _____
Supply Fan Amps	L1 _____	L2 _____	L3 _____
Outdoor Fan Amps	L1 _____	L2 _____	

TEMPERATURES

Outdoor-air Temperature	_____ °F DB (Dry Bulb)	
Return-air Temperature	_____ °F DB	_____ °F WB (Wet Bulb)
Cooling Supply Air Temperature	_____ °F	

PRESSURES

Refrigerant Suction	_____ PSIG
Refrigerant Discharge	_____ PSIG

Verify Refrigerant Charge using Charging Charts (Y/N) _____

GENERAL

Economizer minimum vent and changeover settings to job requirements (if equipped) (Y/N) _____

Verify smoke detector unit shutdown by utilizing magnet test (Y/N) _____

Manufacturer reserves the right to discontinue, or change at any time, specifications or designs without notice and without incurring obligations.

CUT ALONG DOTTED LINE

CUT ALONG DOTTED LINE

© 2021 Carrier

Manufacturer reserves the right to discontinue, or change at any time, specifications or designs without notice and without incurring obligations.

Catalog No. 04-53500313-01 Printed in U.S.A. Form 50FCQ-4-7-02SI Pg CL-2 11-21 Replaces: 50FCQ-4-7-01SI