Turn to the experts

Product Data

Commercial Split Systems
Air Conditioning Condensing Units

6 to 20 Tons

38AUZ07,08,12,14 Shown

38AUZ, AUD 07-25 Single and Dual Circuit Condensing Units
with Puron® R-410A Refrigerant

© 2020 Carrier Corporation

Features/Benefits

These dependable outdoor air cooled condensing units match Carrier's indoor-air handlers to meet a wide selection of cooling solutions.

Carrier's air-cooled air conditioning split systems:

- Provide a logical solution for commercial needs
- Have rugged, dependable construction
- Available with single or dual refrigerant circuits.
- Have cooling capability up to 125°F (52°C) ambient and down to 35°F (2°C) ambient standard

Constructed for long life

The 38AUZ single circuit and 38AUD dual circuit, air cooled condensing units are designed and built to last. The high efficient designed outdoor coil construction allows for a more efficient design in a smaller cabinet size that utilizes an overall reduction in refrigerant charge. Where conditions require, special coil coating coil protection option is available. Cabinets are constructed of prepainted galvanized steel, delivering unparalleled protection from the environment. Inside and outside surfaces are protected to ensure long life, good looks, and reliable operation. Safety controls are used for enhanced system protection and reliability. Each unit utilizes the Comfort Alert™ diagnostic and troubleshoot control system. This protects the units operation and provides valuable diagnostic information when required.

Factory-installed options (FIOPs)

Certified and pre-engineered factory-installed options (FIOPs) allow units to be installed in less time, thereby reducing installed cost.

FIOPs include:

- low ambient controls which provide cooling operation down to –20°F (–29°C) ambient temperatures
- non-fused disconnect
- special coil coating coil protection
- louvered hail guard

Efficient operation

These air cooled condensing units will provide EERs up to 12.0 (tested in accordance with AHRI standard 340/360).

This high efficiency operation will help reduce overall operating cost and energy consumption.

Controls for performance dependability

The 38AU condensing units offer operating controls and components designed for performance dependability. The high efficiency hermetic scroll compressor is engineered for long life and durability. The compressors include vibration isolation for quiet operation. The high-pressure switch protects the entire refrigeration system from abnormally high operating pressures. A low-pressure switch protects the system from loss of charge. These units also include anti-short-cycling protection, which helps to protect the units against compressor failure.

All units include a crankcase heater to eliminate liquid slugging at start-up. Each unit comes standard with the Comfort Alert control system. This provides:

- System Go LED indicator
- Fault LED indicator
- Compressor fault LED indicator
- Phase loss protection
- Phase reversal protection
- Safety pressure indicator
- Anti-short cycle protection

Innovative Carrier 40RUA packaged air handlers are custom matched to 38AUZ/D condensing units.

Information on matching 40RUA DX packaged air handler follows for convenience. See separate product data for more details. The 40RUA Series has excellent fan performance, efficient direct-expansion (DX) coils, a unique combination of indoor-air quality features, and is easy to install. Its versatility and state-of-the-art features help to ensure economical performance of the split system both now and in the future.

Indoor-air quality (IAQ) features

The unique combination of IAQ features in the 40RUA Series air handlers help to ensure that only clean, fresh, conditioned air is delivered to the occupied space.

Direct-expansion 4 row cooling coils prevent the build-up of humidity in the room, even during part-load conditions.

Standard 2-in. (51mm) disposable filters remove dust and airborne particles from the occupied space for cleaner air.

The pitched, non-corroding drain pan can be adjusted for a right-hand or left-hand connection to suit many applications and provide positive drainage and prevent standing condensate.

The accessory economizer can provide ventilation air to improve indoor-air quality by using demand control ventilation. When used in conjunction with Carrier Comfort System and CO_2 sensors, the economizer admits fresh outdoor air to replace stale, recirculated indoor air.

Economy

The 40RUA Series packaged air handlers provide reduced installation expense and energy-efficient performance.

Quick installation is ensured by the multipoise design. Units can be installed in either the horizontal or vertical configuration without modifications. Fan motors and contactors are pre-wired and thermostatic expansion valves (TXVs) are factory-installed on all 40RUA models.

High efficiency, precision-balanced fans minimize air turbulence, surging, and unbalanced operation, cutting operation expenses.

The economizer accessory precisely controls the blend of outdoor air and room air to achieve comfort levels. When the outside air enthalpy is suitable, outside air dampers can fully open to provide "free" cooling without energizing mechanical cooling.

Rugged dependability

The 40RUA series units are made to last. The die-formed galvanized steel panels ensure structural integrity under all operating conditions. Galvanized steel fan housings are securely mounted to a die-formed galvanized steel fan

Table of contents

Features/Benefits . . . 2
Model Number Nomenclature . . . 4
AHRI Capacity Ratings . . . 5
Physical Data . . . 6
Base Unit Dimensions . . . 10
Options and Accessories . . . 17
Typical Piping and Wiring Diagrams . . . 20
Performance Data . . . 27
Electrical Data . . . 52
Application Data . . . 55
Guide Specifications . . . 56

deck. Rugged pillow-block bearings (40RUA14) are securely fastened to the solid steel fan shaft with split collets and clamp locking devices. Smaller unit sizes have spider-type bearings.

Coil flexibility

Model 40RUA direct-expansion coils have galvanized steel casings; inlet and outlet connections are on the same end. The coils are designed for use with Puron (R-410A) refrigerant and have $^3/_8$-in. diameter copper tubes mechanically bonded to aluminum sine-wave fins. The coils include matched, factory-installed thermostatic expansion valves (TXVs) with matching distributor nozzles and offer a removable power element and extended connections.

Easier installation and service

The multipoise design and component layout ensures quick unit installation and operation. Units can be converted from horizontal to vertical operation by simply repositioning the unit. Drain pan connections are duplicated on both sides of the unit. The filters, motor, drive, TXVs, and coil connections are all easily accessed by removing a single side panel.

Model number nomenclature

1	2	3	4	5	6	7	8	9	10	11	12	13	14	15	16	17	18
3	8	A	U	D	C	1	2	A	0	A	6	A	0	A	0	A	0

Model Type
38AU = Carrier Condensing Unit
Puron® R–410A Refrigerant

Type of Coil
Z = Single Circuit, A/C Scroll Compressor
D = Dual Circuit, A/C Scroll Compressor

Refrigerant Options
A = None
B = Low Ambient
C = Hot Gas Bypass (38AUD size 12, 16, 25 only)
D = Single Circuit / 2-Stage (38AUZ size 07, 08 only)
E = Single Circuit / 2-Stage with Low Ambient (38AUZ size 07, 08 only)

Nominal Tonnage
07 = 6 Tons
08 = 7.5 Tons
12 = 10 Tons
14 = 12.5 Tons
16 = 15 Tons
25 = 20 Tons

Not Used
A = Not Used

Not Used
0 = Not Used

Packaging
0 = Standard
1 = LTL

Electrical Options
A = None
C = Non-Fused Disconnect

Service Options
0 = None
1 = Un-powered Convenience Outlet
2 = Powered Convenience Outlet

Not Used
A = Place Holder

Base Unit Controls
0 = Electro-Mechanical Controls

Design Rev
A = Initial Release
B = 38AUZ(D,E)08 only

Voltage
1 = 575/3/60
5 = 208/230/3/6
6 = 460/3/60

Coil Options (RTPF)
A = Cu/Al
B = Precoat (Cu/Al)
C = E-Coat (Cu/Al)
E = Cu/Cu
M = Cu/Al with Louvered Hail Guard
N = Precoat (Cu/Al) with Louvered Hail Guard
P = E-Coat (Cu/Al) with Louvered Hail Guard
R = Cu/Cu with Louvered Hail Guard

AHRI capacity ratings

AHRI CAPACITY RATINGS

UNIT	COOLING STAGES	NOMINAL CAPACITY (tons)	NET COOLING CAPACITY (MBH)	TOTAL POWER (kW)	EER	IEER	IEER WITH 2-SPEED VFD
38AUZ(A,B)07/40RU07	1	6.0	70.0	6.1	11.5	12.2	12.9
38AUZ(A,B)08/40RU08	1	7.5	92.0	8.2	11.2	11.8	12.9
38AUZ12/40RU12	1	10.0	117.0	11.4	10.3	12.0	12.9
38AUZ12/40RU14	1	10.0	117.0	10.4	11.2	N/A	12.9
38AUZ14/40RU14	1	12.5	148.0	13.5	11.0	12.0	12.4
38AUZ16/40RU16	2	15.0	184.0	16.4	11.2	13.2	14.3
38AUZ25/40RU25	2	20.0	240.0	21.8	11.0	12.5	13.6
38AUZ(D,E)07/40RU07	2	6.0	70.0	5.8	12.0	12.9	14.0
38AUZ(D,E)08/40RU08	2	7.5	92.0	8.2	11.2	13.0	14.0
38AUD12/40RU12	2	10.0	117.0	11.4	10.3	11.6	13.0
38AUD12/40RU14	2	10.0	117.0	10.4	11.2	N/A	13.0
38AUD14/40RU14	2	12.5	148.0	13.5	11.0	12.0	12.5
38AUD16/40RU16	2	15.0	184.0	16.4	11.2	11.8	12.6
38AUD25/40RU25	2	20.0	240.0	21.8	11.0	11.2	12.0

LEGEND

AHRI — Air Conditioning, Heating, and Refrigeration
ASHRAE — American Society of Heating, Refrigeration, and Air-Conditioning, Inc.
EER — Energy Efficiency Ratio
IEER — Integrated Energy Efficiency Ratio

NOTES:
1. Rated in accordance with AHRI Standard 340/360, as appropriate.
2. Ratings are based on:
   Cooling Standard: 80°F (27°C) db, 67°F (19°C) wb indoor air temp and 95°F (35°C) db outdoor air temp.

AHRI CERTIFIED™
www.ahridirectory.org
Unitary Large AC
AHRI Standard 340/360
Certification applies only when the complete system is listed with AHRI.

SOUND POWER LEVELS, dB

UNIT	COOLING STAGES	A-WEIGHT OCTAVE OUTDOOR SOUND (DB)								
		TOTAL	63	125	250	500	1000	2000	4000	8000
38AUZ07	1&2	84.6	63.1	68.9	73.4	79.5	80.2	76.4	72.0	64.9
38AUZ08	1&2	84.6	63.1	68.9	73.4	79.5	80.2	76.4	72.0	64.9
38AUZ12	1	83.2	60.4	65.8	77.1	76.8	77.1	75.8	70.2	64.7
38AUD12	2	83.8	62.9	69.6	74.4	77.9	79.3	76.1	70.7	61.1
38AUZ14	1	82.6	60.5	65.1	70.3	77.2	78.0	75.4	71.2	63.9
38AUD14	2	85.2	64.8	68.9	71.4	82.8	79.0	74.2	69.0	61.9
38AUZ16	2	84.2	60.1	69.7	72.8	78.7	79.5	76.3	72.9	67.8
38AUD16	2	82.8	55.5	64.8	73.6	77.2	78.2	74.8	70.7	64.3
38AUZ25	2	82.6	60.5	65.1	70.3	77.2	78.0	75.4	71.2	63.9
38AUD25	2	85.2	64.8	68.9	71.4	82.8	79.0	74.2	69.0	61.8

LEGEND

dB — Decibel

NOTE: Outdoor sound data is measured in accordance with AHRI standard 270-2008.

Physical data

38AU**07-14 PHYSICAL DATA

UNIT	SINGLE CIRCUIT MODELS with RTPF — ROUND TUBE/PLATE FIN COIL DESIGN					
	38AUZ(A,B)07	38AUZ(D,E)07	38AUZ(A,B)08	38AUZ(D,E)08	38AUZ12	38AUZ14
Refrigeration System						
# Circuits / # Comp. / Type	1 / 1 / Scroll	1 / 1 / Scroll	1 / 1 / Scroll	1 / 1 / Scroll	1 / 1 / Scroll	1 / 1 / Scroll
Refrigerant Type	Puron® R-410A					
R-410A shipping charge A/B (lbs, 60 Hz)	9.0	9.0	9.0	9.0	9.0	9.0
System charge w/ fan coil* (60 Hz)	14.0	14.0	17.0	19.0	20.0	43.0
Metering device	TXV	TXV	TXV	TXV	TXV	TXV
High-press. Trip / Reset (psig)	630 / 505	630 / 505	630 / 505	630 / 505	630 / 505	630 / 505
Low-press. Trip / Reset (psig)	54 / 117	54 / 117	54 / 117	54 / 117	54 / 117	54 / 117
Compressor						
Model	ZP61	ZPS60	ZP83	ZPS83	ZP104	ZP137
Oil Charge A/B (oz)	56	56	60	58	110	110
Speed (rpm, 60 Hz)	3500 / 2900	3500 / 2900	3500 / 2900	3500	3500	3500
Condenser Coil						
Material	Al/Cu	Al/Cu	Al/Cu	Al/Cu	Al/Cu	Al/Cu
Coil type	RTPF	RTPF	RTPF	RTPF	RTPF	RTPF
Rows / FPI	2 / 17	2 / 17	2 / 17	2 / 17	2 / 17	3 / 17
total face area (ft^2)	17.5	17.5	17.5	23.0	25.1	31.8
Condenser Fan / Motor						
Qty / Motor drive type	2 / direct	2 / direct	2 / direct	2 / direct	2 / direct	2 / direct
Motor HP / RPM	$^1/_4$ / 1100	$^1/_4$ / 1100	$^1/_4$ / 1100	$^1/_4$ / 1100	$^1/_4$ / 1100	$^1/_4$ / 1100
Fan diameter (in.)	22	22	22	22	22	22
Nominal Airflow (cfm)	6,000	6,000	6,000	6,000	6,000	6,000
Watts (total)	610	610	610	610	610	610
Piping Connections						
Qty / Suction (in. ODS)	1 / 1 $^1/_8$	1 / 1 $^1/_8$	1 / 1 $^1/_8$	1 / 1 $^1/_8$	1 / 1 $^3/_8$	1 / 1 $^3/_8$
Qty / Liquid (in. ODS)	1 / $^3/_8$	1 / $^3/_8$	1 / $^1/_2$	1 / $^1/_2$	1 / $^1/_2$	1 / $^5/_8$

LEGEND
FPI — Feet per inch

* Approximate system charge with about 25 ft piping of sizes indicated with matched 40RUA.

38AU**12-25 PHYSICAL DATA

UNIT	MODELS with RTPF — ROUND TUBE/PLATE FIN COIL DESIGN					
	38AUD12	38AUD14	38AUZ16	38AUD16	38AUZ25	38AUD25
Refrigeration System						
# Circuits / # Comp. / Type	2 / 2 / Scroll	2 / 2 / Scroll	1 / 2 / Scroll	2 / 2 / Scroll	1 / 2 / Scroll	2 / 2 / Scroll
Refrigerant Type	Puron® R-410A					
R-410A shipping charge A/B (lbs, 60 Hz)	9.0 / 9.0	9.0 / 9.0	9.0	9.0 / 9.0	9.0	9.0 / 9.0
System charge w/ fan coil* (60 Hz)	11.0 / 11.0	22.0 / 22.0	43.0	22.0 / 22.0	38.0	19.0 / 19.0
Metering device	TXV	TXV	TXV	TXV	TXV	TXV
High-press. Trip / Reset (psig)	630 / 505	630 / 505	630 / 505	630 / 505	630 / 505	630 / 505
Low-press. Trip / Reset (psig)	54 / 117	54 / 117	54 / 117	54 / 117	54 / 117	54 / 117
Compressor						
Model	ZP51 (2)	ZP67 (2)	ZP83 (2)	ZP83 (2)	ZP104 (2)	ZP104 (2)
Oil Charge A/B (oz)	42 / 42	56 / 56	60 / 60	60 / 60	110 / 110	110 / 110
Speed (rpm, 60 Hz)	3500 / 2900	3500 / 2900	3500	3500 / 2900	3500	3500 / 2900
Condenser Coil						
Material	Al/Cu	Al/Cu	Al/Cu	Al/Cu	Al/Cu	Al/Cu
Coil type	RTPF	RTPF	RTPF	RTPF	RTPF	RTPF
Rows / FPI	2 / 17	3 / 17	2 / 17	2 / 17	2 / 17	2 / 17
total face area (ft2)	25.1	31.8	23.5 x 2	23.5 x 2	25.0 x 2	25.0 x 2
Condenser fan / motor						
Qty / Motor drive type	2 / direct	2 / direct	3 / direct	3 / direct	4 / direct	4 / direct
Motor HP / RPM	$^1/_4$ / 1100	$^1/_4$ / 1100	$^1/_4$ / 1100	$^1/_4$ / 1100	$^1/_4$ / 1100	$^1/_4$ / 1100
Fan diameter (in.)	22	22	22	22	22	22
Nominal Airflow (cfm)	6,000	6,000	9,000	9,000	12,000	12,000
Watts (total)	610	610	970	970	1150	1150
Piping Connections						
Qty / Suction (in. ODS)	2 / 1 $^1/_8$	2 / 1 $^3/_8$	1 / 1 $^3/_8$	2 / 1 $^3/_8$	1 / 1 $^5/_8$	2 / 1 $^3/_8$
Qty / Liquid (in. ODS)	2 / $^3/_8$	2 / $^1/_2$	1 / $^5/_8$	2 / $^1/_2$	1 / $^5/_8$	2 / $^1/_2$

40RUA PHYSICAL DATA

size	07	08	12	14	16	25	28	30
Nominal Tonnage	6	7.5	10	12.5	15	20	25	30
Refrigerant								
Refrigerant Type	Puron® R-410A							
Shipping Charge (lbs)	Nitrogen purge							
Metering Device	TXV							
Operating Charge (lb)	3.0	3.0	1.5/1.5	2.0/2.0	2.5/2.5	3.5/3.5	4.5/4.5	5.0/5.0
Direct-Expansion Coil								
Max Working Pressure (psig)	650							
Material	Al/Cu							
Coil Type	RTPF							
Face Area (sq ft)	6.67	8.33	10.01	13.25	17.67	19.88	24.86	29.83
No. of Circuits per Split	12	15	9	12	16	18	20	24
Row/Fins per in.	4/15	4/15	4/15	4/15	4/15	4/15	4/15	4/15

Physical data (cont)

38AUZ Piping Recommendations (Single-Circuit)

MODEL & NOMINAL CAPACITY	LINEAR LINE (FT)	0 - 24	25 - 49		50 - 74		75 - 99		100 - 124		125 - 149		150 - 174		175 - 200	
	EQUIV. LINE (FT)	0 - 37	38 - 74		75 - 112		113 - 149		150 - 187		188 - 224		225 - 262		263 - 300	
38AUZ_07 TC 68.5, SC 5.57°F	Liquid Line size	3/8"	3/8"	1/2"	1/2"	5/8"	1/2"	5/8"	1/2"	5/8"	1/2"	5/8"	1/2"	5/8"	1/2"	5/8"
	Liquid PD (F)	2.0	4.0	0.7	1.1	0.3	1.4	0.4	1.8	0.5	2.1	0.6	2.5	0.7	2.8	0.8
	Max Lift (ft)	18	7	34	31	39	44	57	41	57	35	54	31	53	27	52
	Max Lift PD (F)	3.5	4.6	3.5	3.5	3.5	5.0	5.0	5.0	5.0	4.9	5.0	5.0	5.0	5.0	5.0
	Suction Line size	7/8"	7/8"	1-1/8"	7/8"	1-1/8"	7/8"	1-1/8"	7/8"	1-1/8"	1-1/8"		1-1/8"		1-1/8"	
	Suction Ln PD (F)	0.9	1.8	0.5	2.7	0.8	3.6	1.0	4.5	1.3	1.6		1.8		2.1	
	Charge (lb)	10.8	11.8	13.7	15.2	18.5	16.9	21.3	18.7	24.2	21.4	27.1	23.4	30.0	25.3	32.8
	#/TR	1.90	2.07	2.41	2.67	3.25	2.97	3.74	3.28	4.25	3.8	4.75	4.1	5.26	4.4	5.75
38AUZ(A,B) 08 TC 91.9, SC 11.8°F	Liquid Line size	1/2"	1/2"	5/8"	1/2"	5/8"	1/2"	5/8"	1/2"	5/8"	1/2"	5/8"	1/2"	5/8"	1/2"	5/8"
	Liquid PD (F)	0.6	1.3	0.3	1.9	0.5	2.5	0.7	3.2	0.9	3.8	1.0	4.4	1.2	5.1	1.4
	Max Lift (ft)	25	50	50	75	75	100	100	97	97	90	90	82	121	74	119
	Max Lift PD (F)	2.7	5.4	4.5	8.1	6.7	10.8	9.0	11.2	8.9	11.2	8.5	11.2	11.2	11.2	11.2
	Suction Line size	7/8"	7/8"	1-1/8"	7/8"	1-1/8"	1-1/8"		1-1/8"	1-3/8"	1-1/8"	1-3/8"	1-1/8"	1-3/8"	1-1/8"	1-3/8"
	Suction Ln PD (F)	1.5	3.1	0.8	4.6	1.2	1.6		2.1	0.7	2.5	0.8	2.9	1.0	3.3	1.1
	Charge (lb)	13.6	15.4	16.1	17.2	20.5	19.5	23.3	21.5	27.1	23.4	30.2	25.4	33.2	27.3	36.3
	#/TR	1.78	2.02	2.11	2.25	2.68	2.55	3.05	2.81	3.54	3.06	3.95	3.32	4.34	3.57	4.75
38AUZ(D,E) 08 TC 92.0, SC 11.3°F	Liquid Line size	1/2"	1/2"	5/8"	1/2"	5/8"	1/2"	5/8"	1/2"	5/8"	1/2"	5/8"	1/2"	5/8"	1/2"	5/8"
	Liquid PD (F)	0.6	1.3	0.3	1.9	0.5	2.5	0.7	3.2	0.9	3.8	1.0	4.4	1.2	5.1	1.4
	Max Lift (ft)	25	50	50	75	75	100	100	97	97	90	90	82	121	74	119
	Max Lift PD (F)	2.7	5.4	4.5	8.1	6.7	10.8	9.0	11.2	8.9	11.2	8.5	11.2	11.2	11.2	11.2
	Suction Line size	7/8"	7/8"	1-1/8"	7/8"	1-1/8"	1-1/8"		1-1/8"	1-3/8"	1-1/8"	1-3/8"	1-1/8"	1-3/8"	1-1/8"	1-3/8"
	Suction Ln PD (F)	1.5	3.1	0.8	4.6	1.2	1.6		2.1	0.7	2.5	0.8	2.9	1.0	3.3	1.1
	Charge (lb)	15.6	19.0	19.7	20.8	24.1	23.1	26.9	25.1	30.7	26.0	32.8	27.0	34.8	27.9	37.1
	#/TR	2.08	2.53	2.63	2.77	3.21	3.08	3.59	3.35	4.09	3.47	4.37	3.60	4.64	3.73	4.95
38AUZ_12 TC 113.1, SC 7.1°F	Liquid Line size	1/2"	1/2"	5/8"	1/2"	5/8"	1/2"	5/8"	1/2"	5/8"	1/2"	5/8"	5/8"		5/8"	
	Liquid PD (F)	0.9	1.9	0.5	2.8	0.8	3.8	1.0	4.7	1.3	5.7	1.6	1.8		2.1	
	Max Lift (ft)	25	40	50	28	54	34	68	22	65	11	63	59		55	
	Max Lift PD (F)	2.9	5.0	4.5	5.0	5.0	6.5	6.4	6.5	6.4	6.5	6.5	6.4		6.4	
	Suction Line size	7/8"	1-3/8"	1-3/8"	1-1/8"	1-3/8"	1-1/8"	1-3/8"	1-1/8"	1-3/8"	1-1/8"	1-3/8"	1-1/8"	1-3/8"	1-1/8"	1-3/8"
	Suction Ln PD (F)	2.4	1.2	1.2	1.8	0.6	2.4	0.9	3.1	1.1	3.7	1.3	4.3	1.5	4.9	1.7
	Charge (lb)	15.7	18.0	20.0	19.8	23.1	21.6	26.1	23.6	29.2	25.5	32.3	34.1	35.3	36.9	38.4
	#/TR	1.67	1.89	2.09	2.10	2.45	2.29	2.77	2.50	3.10	2.71	3.43	3.62	3.75	3.92	4.08
38AUZ_14 TC 146.1, SC 3.9°F	Liquid Line size	5/8"	5/8"	3/4"	5/8"	3/4"	5/8"	3/4"	5/8"	3/4"	5/8"	3/4"	5/8"	3/4"	3/4"	7/8"
	Liquid PD (F)	0.4	0.8	0.4	1.2	0.6	1.6	0.8	2.0	1.1	2.4	1.1	2.8	1.5	1.7	0.6
	Max Lift (ft)	23	16	23	10	18	28	38	21	36	14	35	9	30	25	43
	Max Lift PD (F)	1.8	1.84	1.84	1.8	1.8	3.3	3.3	3.3	3.3	3.3	3.3	3.3	3.3	3.3	3.3
	Suction Line size	1-1/8"	1-1/8"	1-3/8"	1-1/8"	1-3/8"	1-3/8"		1-3/8"	1-5/8"	1-3/8"	1-5/8"	1-3/8"	1-5/8"	1-3/8"	1-5/8"
	Suction Ln PD (F) (Cap Red)	1.1	2.2	0.8	3.3 (-2.3%)	1.2	1.6		2.0	0.8	2.4 (-0.7%)	1.0	2.8 (-1.4%)	1.2	3.2 (-2.1%)	1.3
	Charge (lb)	31.8	34.7	37.6	37.6	41.8	41.1	46.1	44.2	51.6	47.3	56.1	50.3	60.6	63.4	76.9
	#/TR	2.62	2.86	3.09	3.09	3.44	3.38	3.79	3.64	4.24	3.89	4.61	4.14	4.98	5.21	6.32
38AUZ_16 TC 185.7, SC 18.4°F	Liquid Line size	5/8"	5/8"		5/8"		5/8"		5/8"		5/8"		5/8"	3/4"	5/8"	3/4"
	Liquid PD (F)	0.7	1.3		2.0		2.7		3.4		4.0		4.7	2.5	5.4	2.8
	Max Lift (ft)	25	50		75		100		125		150		153	175	145	175
	Max Lift PD (F)	2.8	5.65		8.5		11.3		14.1		16.9		17.9	17.5	17.9	17.9
	Suction Line size	1-3/8"	1-3/8"		1-3/8"		1-3/8"		1-3/8"	1-5/8"	1-3/8"	1-5/8"	1-3/8"	1-5/8"	1-3/8"	1-5/8"
	Suction Ln PD (F) (Cap Red)	1.4	1.0		1.5		2.0		2.5 (-0.9%)	1.1	3 (-1.8%)	1.3	3.5 (-2.7%)	1.5	4 (-3.6%)	1.7
	Charge (lb)	35.1	38.1		41.2		44.2		47.3	48.4	50.4	51.7	53.4	63.7	56.5	68.3
	#/TR	2.9	3.11		3.36		3.61		3.86	3.95	4.11	4.22	4.36	5.20	4.61	5.57
38AUZ_25 TC 233.3, SC 13.0°F	Liquid Line size	5/8"	5/8"		5/8"		5/8"		5/8"	3/4"	5/8"	3/4"	5/8"	3/4"	5/8"	3/4"
	Liquid PD (F)	1.1	2.1		3.2		4.3		5.4	2.8	6.4	3.3	7.5	3.9	8.6	4.4
	Max Lift (ft)	25	50		93		98		85	116	71	108	59	102	46	95
	Max Lift PD (F)	3.2	6.4		9.6		12.5		12.5	12.5	12.4	12.5	12.5	12.5	12.5	12.5
	Suction Line size	1-3/8"	1-3/8"		1-3/8"	1-5/8"	1-3/8"	1-5/8"	1-3/8"	1-5/8"	1-5/8"	2-1/8"	1-5/8"	2-1/8"	1-5/8"	2-1/8"
	Suction Ln PD (F) (Cap Red)	0.8	1.6		2.4 (-0.8%)	1.0	3.3. (-2.2%)	1.4	4 (-3.6%)	1.7	2.0	0.4	2.4 (-0.7%)	0.5	2.7 (-1.2%)	0.6
	Charge (lb)	31.1	34.1		37.2	37.9	40.2	41.1	43.3	50.7	47.7	58.5	51.0	63.6	54.3	68.7
	#/TR	2.52	2.77		3.02	3.07	3.26	3.34	3.51	4.11	3.87	4.75	4.13	5.16	4.40	5.57

38AUD Piping Recommendations (Dual-Circuit)

MODEL & NOMINAL CAPACITY	LINEAR LINE (FT)	0 - 24	25 - 49		50 - 74		75 - 99		100 - 124		125 - 149		150 - 174		175 - 200	
	EQUIV. LINE (FT)	0 - 37	38 - 74		75 - 112		113 - 149		150 - 187		188 - 224		225 - 262		263 - 300	
38AUD_12 TC 55.9 Each, SC 12.7°F	Liquid Line size	3/8"	3/8"		3/8"		3/8"	1/2"	3/8"	1/2"	3/8"	1/2"	1/2"	5/8"	1/2"	5/8"
	Liquid PD (F)	1.4	2.7		5.5		5.5	0.9	6.9	1.1	8.2	1.4	1.6	0.5	1.8	0.5
	Max Lift (ft)	25	50		75		82	100	66	125	49	133	130	144	128	144
	Max Lift PD (F)	3.4	6.8		10.2		12.1	9.0	12.1	11.2	12.1	12.1	12.1	12.1	12.1	12.1
	Suction Line size	3/4"	7/8"		7/8"		7/8"	1-1/8"	7/8"	1-1/8"	1-1/8"		1-1/8"		1-1/8"	
	Suction Ln PD (F) (Cap Red)	1.4	1.2		1.8		2.5 (-0.8%)	0.8	3.1 (-1.9%)	0.9	1.1		1.3		1.5	
	Charge (lb)	9.0	10.0		11.0		12.1	15.7	13.1	17.7	14.9	19.6	21.5	28.2	23.5	31.0
	#/TR	0.73	0.81		0.89		0.97	1.27	1.05	1.42	1.20	1.58	1.74	2.27	1.89	2.50
38AUD_14 TC 69.8 Each, SC 14.2°F	Liquid Line size	3/8"	3/8"		3/8"		3/8"	1/2"	3/8"	1/2"	1/2"		1/2"	5/8"	1/2"	5/8"
	Liquid PD (F)	2.1	4.1		6.2		8.2	1.5	10.3	1.8	2.2		2.6	0.7	2.9	0.8
	Max Lift (ft)	128	50		75		69	155	42	125	145		140	163	135	162
	Max Lift PD (F)	4.0	8.1		12.1		13.6	9.4	13.6	11.7	13.6		13.6	13.6	13.6	13.6
	Suction Line size	7/8"	7/8"		7/8"	1-1/8"	1-1/8"		1-1/8"		1-1/8"		1-1/8"		1-1/8"	
	Suction Ln PD (F) (Cap Red)	1.0	1.9		2.9 (-1.5%)	0.8	1.1		1.4		1.6		1.9		2.2 (-0.3%)	0.7
	Charge (lb)	17.0	18.0		19.0	19.5	20.6	23.7	21.8	25.7	27.6		29.5	36.2	31.5	39.0
	#/TR	1.36	1.44		1.52	1.56	1.65	1.90	1.74	2.05	2.21		2.36	2.89	2.52	3.12
38AUD_16 TC 92.9 Each, SC 15.1°F	Liquid Line size	3/8"	3/8"		3/8"	1/2"	1/2"		1/2"		1/2"	5/8"	1/2"	5/8"	1/2"	5/8"
	Liquid PD (F)	3.4	6.9		10.3	1.9	2.6		3.2		3.9	1.0	4.5	1.2	5.1	1.4
	Max Lift (ft)	25	50		32	75	144		125		127	150	121	159	112	157
	Max Lift PD (F)	5.5	11.1		13.0	8.2	10.9		13.7		14.5	13.6	14.5	14.5	14.5	14.5
	Suction Line size	7/8"	7/8"	1-1/8"	1-1/8"		1-1/8"		1-1/8"	1-3/8"	1-1/8"	1-3/8"	1-1/8"	1-3/8"	1-1/8"	
	Suction Ln PD (F) (Cap Red)	1.5	3.1 (-1.9%)	0.8	1.2		1.6		2 (-0.1%)	0.7	2.5 (-0.8%)	0.8	2.9 (-1.5%)	1.0	3.3 (-2.2%)	1.1
	Charge (lb)	17.0	18.0	18.3	19.5	21.8	23.7		25.7	26.6	27.6	34.4	29.5	37.4	31.5	40.5
	#/TR	1.35	1.43	1.46	1.55	1.73	1.89		2.04	2.11	2.19	2.73	2.35	2.97	2.50	3.22
38AUD_25 TC 121.2 Each, SC 10.6°F	Liquid Line size	3/8"	1/2"		1/2"	5/8"	1/2"	5/8"	1/2"	5/8"	1/2"	5/8"	5/8"		5/8"	3/4"
	Liquid PD (F)	5.6	2.2		3.3	0.9	4.3	1.2	5.4	1.5	6.5	1.8	2.1		2.4	1.3
	Max Lift (ft)	25	50		64	75	70	108	55	104	42	100	97		92	107
	Max Lift PD (F)	7.7	6.3		8.5	7.1	10.0	9.4	9.9	10.0	10.0	10.0	10.0		9.9	10.0
	Suction Line size	1-1/8"	1-1/8"		1-1/8"	1-3/8"	1-1/8"	1-3/8"	1-1/8"	1-3/8"	1-3/8"		1-3/8"		1-3/8"	
	Suction Line PD (F) (Cap Red)	0.7	1.3		2.0	0.7	2.7 (-1.2%)	1.0	3.4 (-2.4%)	1.2	1.4		1.7		1.9	
	Charge (lb)	15.2	17.9		19.8	23.2	21.7	26.2	23.7	29.3	26.7	32.4	35.4		38.5	48.5
	#/TR	1.20	1.41		1.56	1.83	1.72	2.07	1.87	2.31	2.11	2.56	2.80		3.04	3.83

LEGEND

#/TR — Charge to unit capacity ratio, lbs per ton (at 45°F SST, 95°F ODA)

Cap Red — Capacity reduction caused by suction line pressure drop GT 2°F

Liquid PD (F) — Liquid line pressure drop, saturated temperature, °F

Max Lift — Maximum liquid lift (Indoor unit ABOVE outdoor unit only), at maximum permitted pressure drop.

LEGEND

Max Lift PD (F) — Pressure drop including Maximum liquid lift value

SC — Sub-cooling, °F (at liquid line valve)

Suction Line PD (F) — Suction Line Pressure Drop, Saturated Temperature, °F

TC — Total Capacity, MBH (at 45°F Saturated Suction, 95°F Outdoor Air Temp)

NOTE: 38AUD units require TWO sets of refrigeration piping.

Base unit dimensions

38AUZ07-14, 38AUD12-14 CONDENSING UNIT

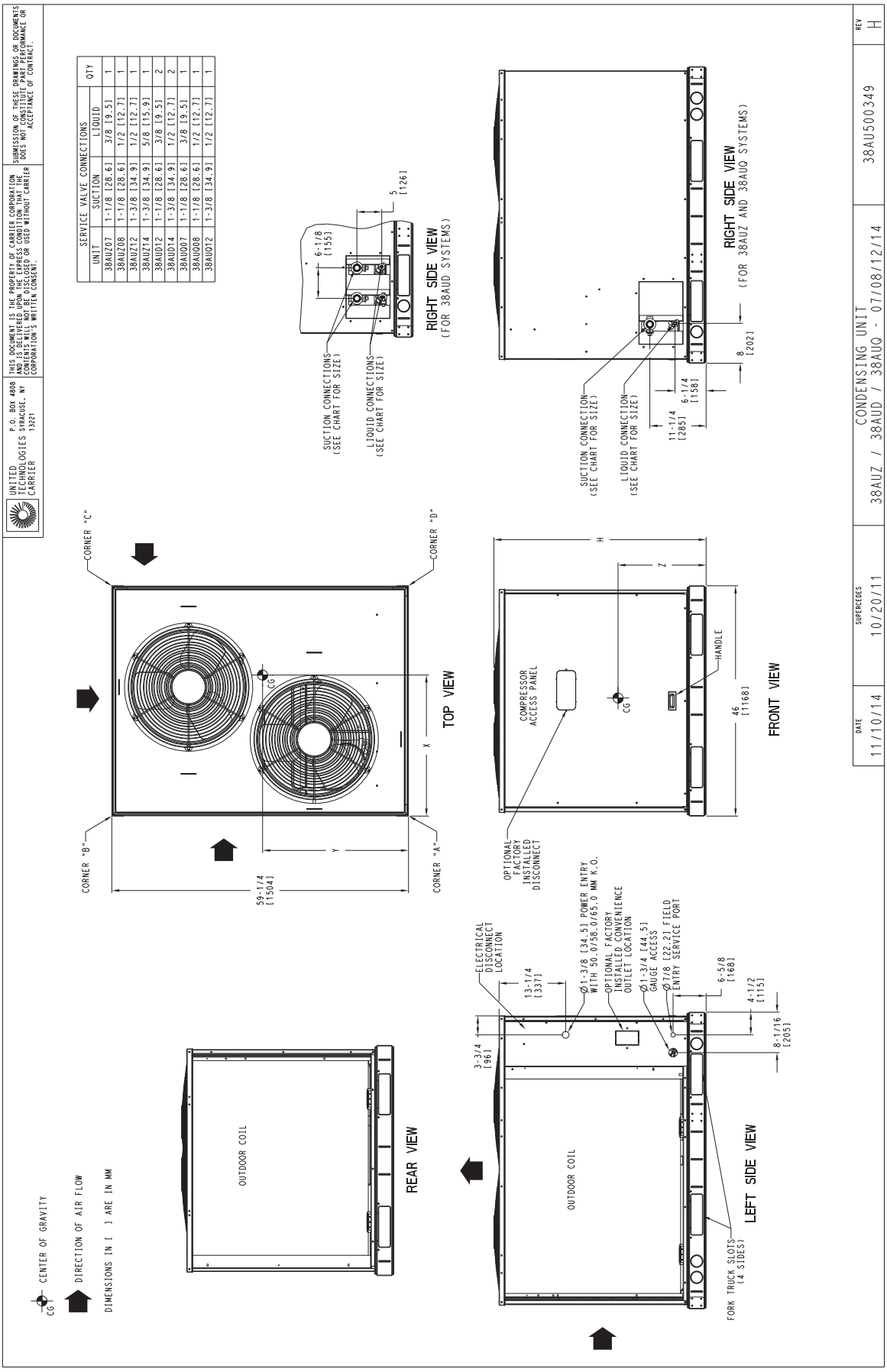

38AUZ07-14, 38AUD12-14 CONDENSING UNIT WEIGHTS AND CLEARANCES

UNITED TECHNOLOGIES CARRIER
P.O. BOX 4808
SYRACUSE, NY
13221

THIS DOCUMENT IS THE PROPERTY OF CARRIER CORPORATION AND IS DELIVERED UPON THE EXPRESS CONDITION THAT THE CONTENTS WILL NOT BE DISCLOSED OR USED WITHOUT CARRIER CORPORATION'S WRITTEN CONSENT.

SUBMISSION OF THESE DRAWINGS OR DOCUMENTS DOES NOT CONSTITUTE PART PERFORMANCE OR ACCEPTANCE OF CONTRACT.

UNIT	ELECTRICAL CHARACTERISTICS	STD. UNIT WT.		CORNER A		CORNER B		CORNER C		CORNER D		CENTER OF GRAVITY			UNIT HEIGHT
		LBS.	KG.	LBS.	KG.	LBS.	KG.	LBS.	KG.	LBS.	KG.	X	Y	Z	H
38AUZ-07 (RTPF)	208/230-3-60,460-3-60,575-3-60	389	176	141	64	96	44	62	28	91	41	18 [457.2]	24 [609.6]	21 [533.4]	42-3/8 [1076.0]
38AUZ(A,B)08 (RTPF)	208/230-3-60,460-3-60,575-3-60	391	177	142	64	96	44	62	28	91	41	18 [457.2]	24 [609.6]	21 [533.4]	42-3/8 [1076.0]
38AUZ(D,E)08 (RTPF)	208/230-3-60,460-3-60,575-3-60	430	195	142	64	96	44	76	34	111	50	18 [457.2]	24 [609.6]	21 [533.4]	42-3/8 [1076.0]
38AUZ-12 (RTPF)	208/230-3-60,460-3-60,575-3-60	490	222	177	80	120	54	78	35	114	52	18 [457.2]	24 [609.6]	24 [609.6]	50-3/8 [1279.2]
38AUZ-14 (RTPF)	208/230-3-60,460-3-60,575-3-60	598	271	195	88	142	64	110	50	151	68	20 [508.0]	25 [635.0]	24 [609.6]	50-3/8 [1279.2]
38AUD-12 (RTPF)	208/230-3-60,460-3-60,575-3-60	516	234	185	84	117	53	83	38	131	59	19 [482.6]	23 [584.2]	24 [609.6]	50-3/8 [1279.2]
38AUD-14 (RTPF)	208/230-3-60,460-3-60,575-3-60	654	297	214	97	155	70	120	54	165	75	20 [508.0]	25 [635.0]	24 [609.6]	50-3/8 [1279.2]
38AUQ-07	208/230-3-60,460-3-60,575-3-60	444	201	134	61	97	44	90	41	123	56	22 [558.8]	25 [635.0]	13 [330.2]	42-3/8 [1076.0]
38AUQ(A,B)08	208/230-3-60,460-3-60,575-3-60	483	219	162	74	110	50	85	39	125	57	20 [508.0]	24 [609.6]	21 [533.4]	42-3/8 [1076.0]
38AUQ(D,E)08	208/230-3-60,460-3-60,575-3-60	523	237	174	79	118	54	96	44	135	61	21 [533.4]	24 [609.6]	23 [584.2]	50-3/8 [1279.2]
38AUQ-12	208/230-3-60,460-3-60,575-3-60	575	261	186	84	126	57	106	48	157	71	21 [533.4]	24 [609.6]	23 [584.2]	50-3/8 [1279.2]

NOTES:

1. MINIMUM CLEARANCE (LOCAL CODES OR JURISDICTION MAY PREVAIL):
   A. BOTTOM TO COMBUSTIBLE SURFACES: 0 INCHES.
   B. OUTDOOR COIL, FOR PROPER AIR FLOW: 36 INCHES ONE SIDE, 12 INCHES THE OTHER. THE SIDE GETTING THE GREATER CLEARANCE IS OPTIONAL. STANDARD CLEARANCES ON REMAINING TWO SIDES.
   C. OVERHEAD: 60 INCHES, TO ASSURE PROPER OUTDOOR FAN OPERATION.
   D. BETWEEN UNITS: CONTROL BOX SIDE, 42 INCHES PER NEC.
   E. BETWEEN UNIT AND UNGROUNDED SURFACES: CONTROL BOX SIDE, 36 INCHES PER NEC.
   F. BETWEEN UNIT AND BLOCK OR CONCRETE WALLS AND OTHER GROUNDED SURFACES: CONTROL BOX SIDE, 42 INCHES PER NEC.

2. WITH EXCEPTION OF THE CLEARANCE FOR THE OUTDOOR COIL AS STATED IN NOTE 1B, A REMOVABLE FENCE OR BARRICADE REQUIRES NO CLEARANCE.

3. UNITS MAY BE INSTALLED ON COMBUSTIBLE FLOORS MADE FROM WOOD OR CLASS A, B OR C ROOF COVERING MATERIAL.

DATE	SUPERCEDES	CONDENSING UNIT		REV
11/10/14	10/20/11	38AUZ / 38AUD / 38AUQ - 07/08/12/14	38AU500349	H

Base unit dimensions (cont)

38AUZ16, 38AUD16 CONDENSING UNIT

UNIT	ELECTRICAL CHARACTERISTICS	STD. UNIT WT.		CORNER A		CORNER B		CORNER C		CORNER D		CENTER OF GRAVITY			UNIT HEIGHT
		LBS.	KG.	LBS.	KG.	LBS.	KG.	LBS.	KG.	LBS.	KG.	X	Y	Z	H
38AUZ16 (MCHX)	208/230-3-60,460-3-60,575-3-60	633	288	220	100	134	61	135	61.5	144	65.5	38 [965.2]	19 [482.6]	15 [381]	50-3/8 [1279.2]
38AUD16 (MCHX)	208/230-3-60,460-3-60,575-3-60	633	288	220	100	134	61	135	61.5	144	65.5	38 [965.2]	19 [482.6]	15 [381]	50-3/8 [1279.2]
38AUZ16 (RTPF)	208/230-3-60,460-3-60,575-3-60	731	332	237	107	172	78	135	61	186	84	38 [965.2]	19 [482.6]	17 [431.8]	50-3/8 [1279.2]
38AUD16 (RTPF)	208/230-3-60,460-3-60,575-3-60	731	332	237	107	172	78	135	61	186	84	38 [965.2]	19 [482.6]	17 [431.8]	50-3/8 [1279.2]

UNITED TECHNOLOGIES CARRIER
P.O. BOX 4808
SYRACUSE, NY
13221

THIS DOCUMENT IS THE PROPERTY OF CARRIER CORPORATION AND IS DELIVERED UPON THE EXPRESS CONDITION THAT THE CONTENTS WILL NOT BE DISCLOSED OR USED WITHOUT CARRIER CORPORATION'S WRITTEN CONSENT.

SUBMISSION OF THESE DRAWINGS OR DOCUMENTS DOES NOT CONSTITUTE PART PERFORMANCE OR ACCEPTANCE OF CONTRACT.

NOTES:
1. MINIMUM CLEARANCE (LOCAL CODES OR JURISDICTION MAY PREVAIL):
   A. BOTTOM TO COMBUSTIBLE SURFACES: 0 INCHES.
   B. OUTDOOR COIL, FOR PROPER AIR FLOW: 36 INCHES ONE SIDE, 12 INCHES THE OTHER. THE SIDE GETTING THE GREATER CLEARANCE IS OPTIONAL.
   C. OVERHEAD: 60 INCHES, TO ASSURE PROPER OUTDOOR FAN OPERATION.
   D. BETWEEN UNITS: CONTROL BOX SIDE, 42 INCHES PER NEC.
   E. BETWEEN UNIT AND UNGROUNDED SURFACES: CONTROL BOX SIDE, 36 INCHES PER NEC.
   F. BETWEEN UNIT AND BLOCK OR CONCRETE WALLS AND OTHER GROUNDED SURFACES: CONTROL BOX SIDE, 42 INCHES PER NEC.
2. WITH EXCEPTION OF THE CLEARANCE FOR THE OUTDOOR COIL AS STATED IN NOTE 1B, A REMOVABLE FENCE OR BARRICADE REQUIRES NO CLEARANCE.
3. UNITS MAY BE INSTALLED ON COMBUSTIBLE FLOORS MADE FROM WOOD OR CLASS A, B OR C ROOF COVERING MATERIAL.

SERVICE VALVE CONNECTIONS			QTY
UNIT	SUCTION	LIQUID	
38AUZ16	1-3/8 [34.9]	5/8 [15.9]	1 EA
38AUD16	1-3/8 [34.9]	1/2 [12.7]	2 EA

CG — CENTER OF GRAVITY

DIRECTION OF AIR FLOW

DIMENSIONS IN [ ] ARE IN MM

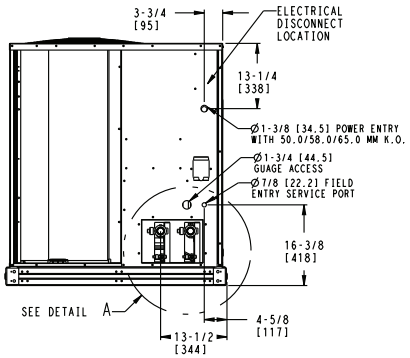

LEFT SIDE VIEW FOR 38AUD SYSTEMS

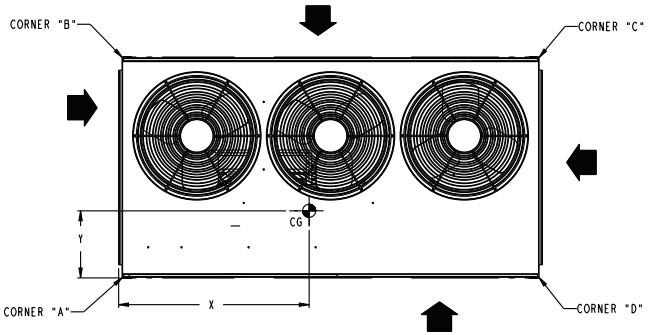

TOP VIEW

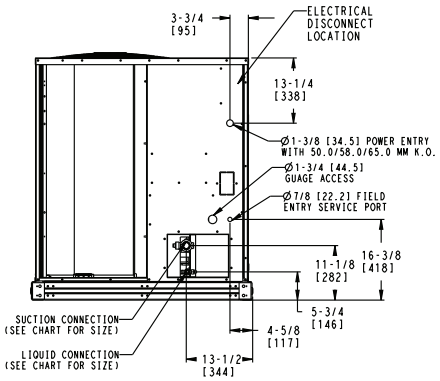

LEFT SIDE VIEW

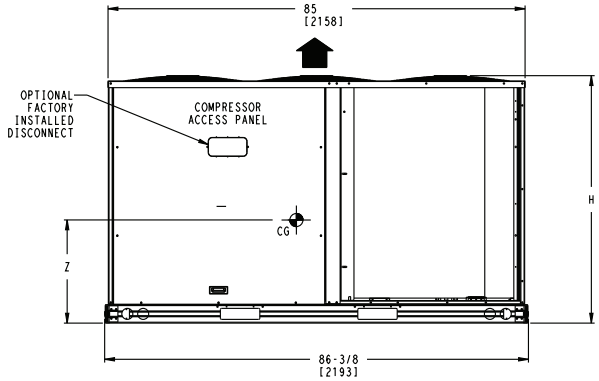

FRONT VIEW

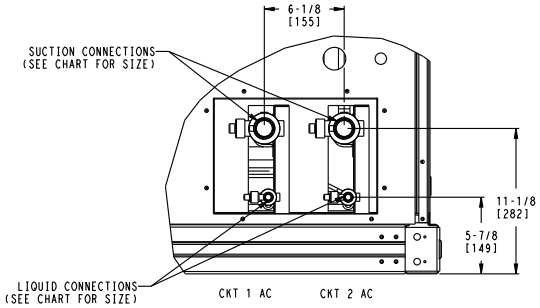

DETAIL A
(NOTE POSITION OF CKT 1)

DATE	SUPERCEDES			REV
11/17/10	08/04/10	38AUZ, 38AUD CONDENSING UNIT	38AU500503	F

38AUZ25, 38AUD25 CONDENSING UNIT

UNIT	ELECTRICAL CHARACTERISTICS	STD. UNIT WT.		CORNER A		CORNER B		CORNER C		CORNER D		CENTER OF GRAVITY			UNIT HEIGHT
		LBS.	KG.	LBS.	KG.	LBS.	KG.	LBS.	KG.	LBS.	KG.	X	Y	Z	H
38AUZ25 (RTPF)	208/230-3-60,460-3-60,575-3-60	978	444	360	163	188	85	147	67	283	128	38 [965.2]	23 [584.2]	17 [431.8]	50-3/8 [1279.2]
38AUD25 (RTPF)	208/230-3-60,460-3-60,575-3-60	978	444	360	163	188	85	147	67	283	128	38 [965.2]	23 [584.2]	17 [431.8]	50-3/8 [1279.2]

UNITED TECHNOLOGIES CARRIER
P.O. BOX 4808
SYRACUSE, NY
13221

THIS DOCUMENT IS THE PROPERTY OF CARRIER CORPORATION AND IS DELIVERED UPON THE EXPRESS CONDITION THAT THE CONTENTS WILL NOT BE DISCLOSED OR USED WITHOUT CARRIER CORPORATION'S WRITTEN CONSENT.

SUBMISSION OF THESE DRAWINGS OR DOCUMENTS DOES NOT CONSTITUTE PART PERFORMANCE OR ACCEPTANCE OF CONTRACT.

NOTES:
1. MINIMUM CLEARANCE (LOCAL CODES OR JURISDICTION MAY PREVAIL):
   A. BOTTOM TO COMBUSTIBLE SURFACES: 0 INCHES.
   B. OUTDOOR COIL, FOR PROPER AIR FLOW: 36 INCHES ONE SIDE, 12 INCHES THE OTHER. THE SIDE GETTING THE GREATER CLEARANCE IS OPTIONAL.
   C. OVERHEAD: 60 INCHES, TO ASSURE PROPER OUTDOOR FAN OPERATION.
   D. BETWEEN UNITS: CONTROL BOX SIDE, 42 INCHES PER NEC.
   E. BETWEEN UNIT AND UNGROUNDED SURFACES: CONTROL BOX SIDE, 36 INCHES PER NEC.
   F. BETWEEN UNIT AND BLOCK OR CONCRETE WALLS AND OTHER GROUNDED SURFACES: CONTROL BOX SIDE, 42 INCHES PER NEC.
2. WITH EXCEPTION OF THE CLEARANCE FOR THE OUTDOOR COIL AS STATED IN NOTE 1B, A REMOVABLE FENCE OR BARRICADE REQUIRES NO CLEARANCE.
3. UNITS MAY BE INSTALLED ON COMBUSTIBLE FLOORS MADE FROM WOOD OR CLASS A, B OR C ROOF COVERING MATERIAL.

SERVICE VALVE CONNECTIONS			QTY
UNIT	SUCTION	LIQUID	
38AUZ25	1-5/8 [41.3]	5/8 [15.9]	1 EA
38AUD25	1-3/8 [34.9]	1/2 [12.7]	2 EA

CG — CENTER OF GRAVITY

DIRECTION OF AIR FLOW

DIMENSIONS IN [ ] ARE IN MM

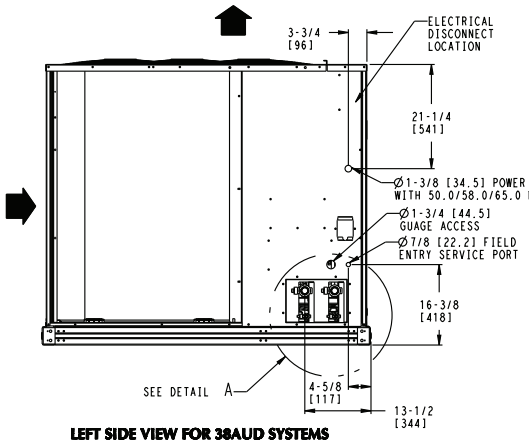

LEFT SIDE VIEW FOR 38AUD SYSTEMS

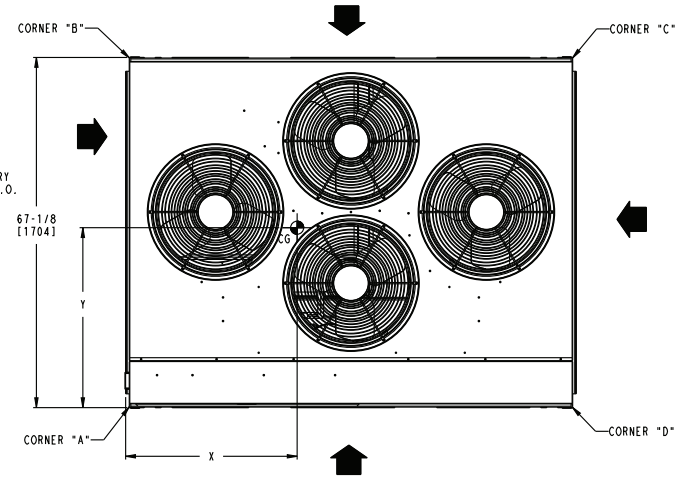

TOP VIEW

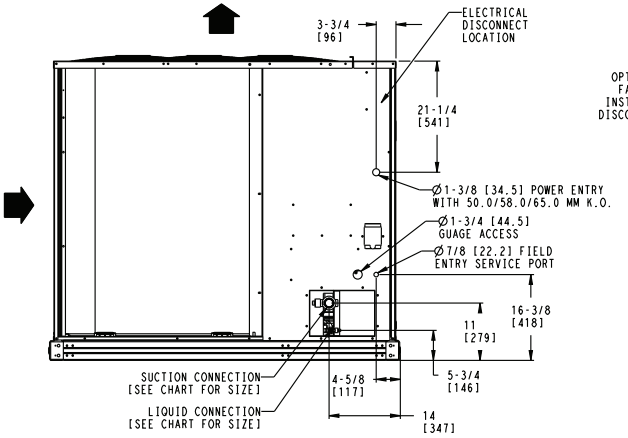

LEFT SIDE VIEW

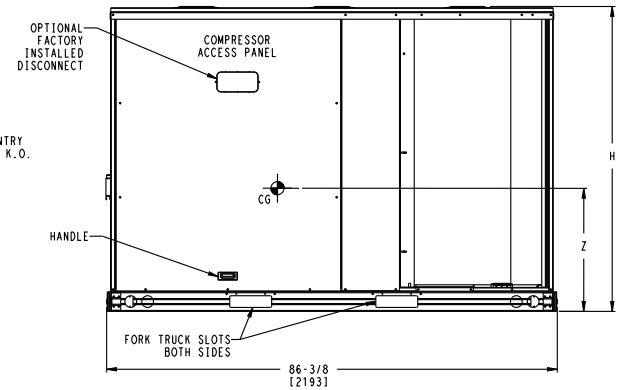

FRONT VIEW

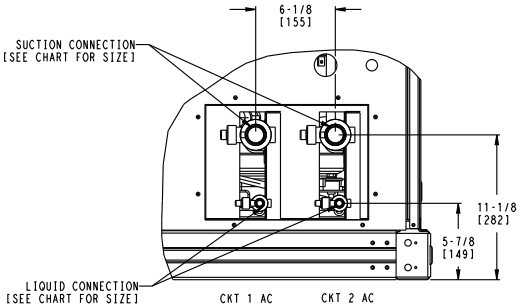

DETAIL A
(NOTE POSITION OF CKT 1)

DATE	SUPERCEDES			REV
11/17/10	08/04/10	38AUZ , 38AUD CONDENSING UNIT	38AU500370	E

Base unit dimensions (cont)

40RUA07-12, 40RUQ07-12,40RUS08-12 FAN COIL UNIT

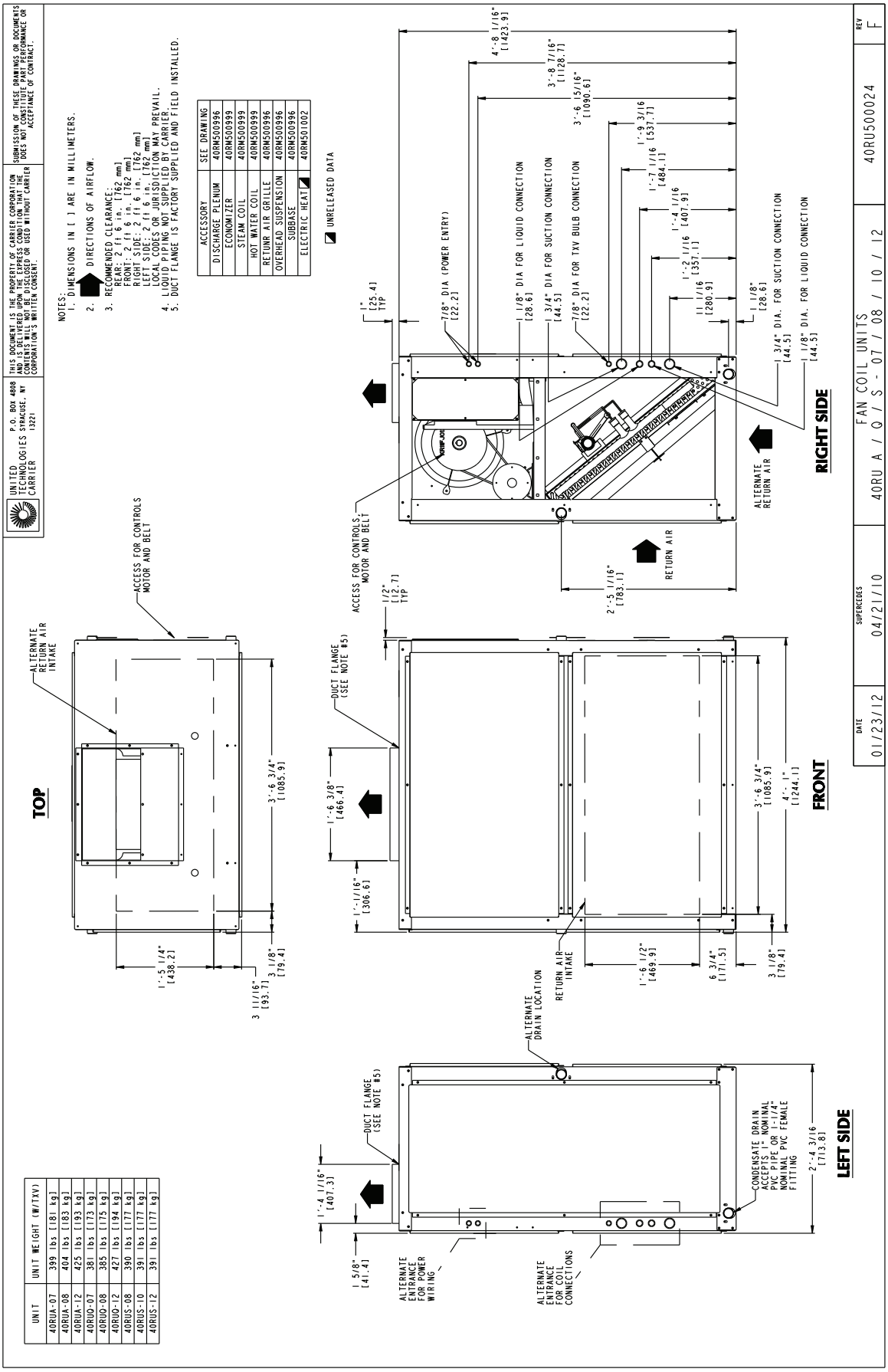

ACCESSORY	SEE DRAWING
DISCHARGE PLENUM	40RM500996
ECONOMIZER	40RM500999
STEAM COIL	40RM500999
HOT WATER COIL	40RM500999
RETURN AIR GRILLE	40RM500996
OVERHEAD SUSPENSION	40RM500996
SUBBASE	40RM500996
ELECTRIC HEAT	40RM501002

UNIT	UNIT WEIGHT (W/TXV)
40RUA-07	399 lbs [181 kg]
40RUA-08	404 lbs [183 kg]
40RUA-12	425 lbs [193 kg]
40RUQ-07	381 lbs [173 kg]
40RUQ-08	385 lbs [175 kg]
40RUQ-12	427 lbs [194 kg]
40RUS-08	390 lbs [177 kg]
40RUS-10	391 lbs [177 kg]
40RUS-12	391 lbs [177 kg]

40RUA14-25, 40RUQ16-25,40RUS14-25 FAN COIL UNIT

UNIT	UNIT WEIGHT (W/TXV)
40RUA-14	695 lbs [315 kg]
40RUA-16	713 lbs [323 kg]
40RUA-25	730 lbs [331 kg]
40RUQ-16	713 lbs [323 kg]
40RUQ-25	720 lbs [327 kg]
40RUS-14	661 lbs [300 kg]
40RUS-16	677 lbs [307 kg]
40RUS-25	683 lbs [310 kg]

UNITED TECHNOLOGIES CARRIER
P.O. BOX 4808
SYRACUSE, NY
13221

THIS DOCUMENT IS THE PROPERTY OF CARRIER CORPORATION AND IS DELIVERED UPON THE EXPRESS CONDITION THAT THE CONTENTS WILL NOT BE DISCLOSED OR USED WITHOUT CARRIER CORPORATION'S WRITTEN CONSENT.

SUBMISSION OF THESE DRAWINGS OR DOCUMENTS DOES NOT CONSTITUTE PART PERFORMANCE OR ACCEPTANCE OF CONTRACT.

NOTES:
1. DIMENSIONS IN [ ] ARE IN MILLIMETERS.
2. DIRECTIONS OF AIRFLOW.
3. RECOMMENDED CLEARANCE:
   REAR: 2 ft 6 in. [762 mm]
   FRONT: 2 ft 6 in. [762 mm]
   RIGHT SIDE: 2 ft 6 in. [762 mm]
   LEFT SIDE: 2 ft 6 in. [762 mm]
   LOCAL CODES OR JURISDICTION MAY PREVAIL.
4. LIQUID PIPING NOT SUPPLIED BY CARRIER.
5. DUCT FLANGE IS FACTORY SUPPLIED AND FIELD INSTALLED.

ACCESSORY	SEE DRAWING
DISCHARGE PLENUM	40RM500997
ECONOMIZER	40RM501000
STEAM COIL	40RM501000
HOT WATER COIL	40RM501000
RETUNR AIR GRILLE	40RM500997
OVERHEAD SUSPENSION	40RM500997
SUBBASE	40RM500997
ELECTRIC HEAT ◪	40RM501002

◪ UNRELEASED DATA

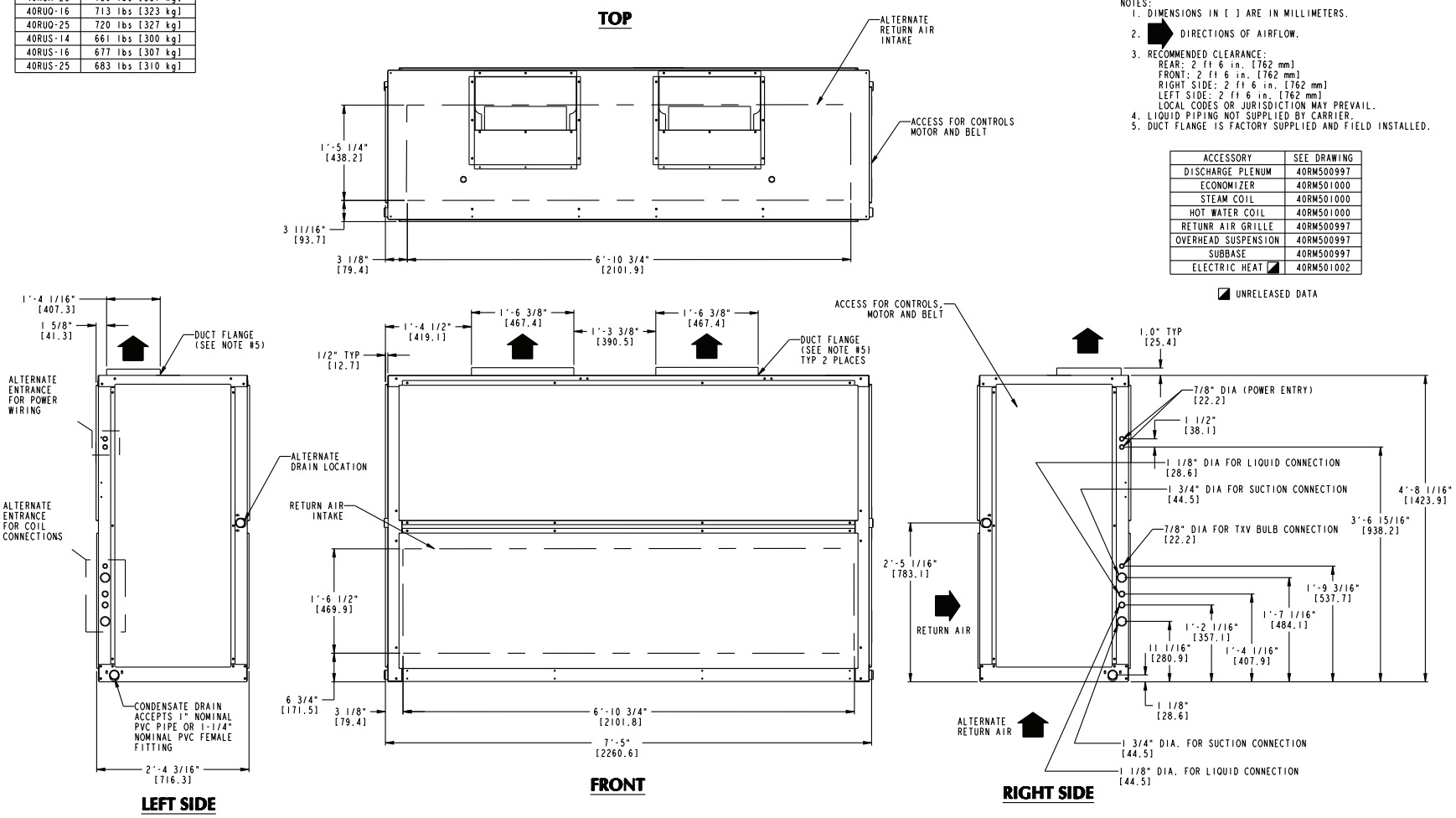

DATE	SUPERCEDES	FAN COIL UNITS 40RU A / Q / S - 14 / 16 / 25	40RU500028	REV
01/23/12	04/21/10			F

40RUA28-30, 40RUS28-30 FAN COIL UNIT

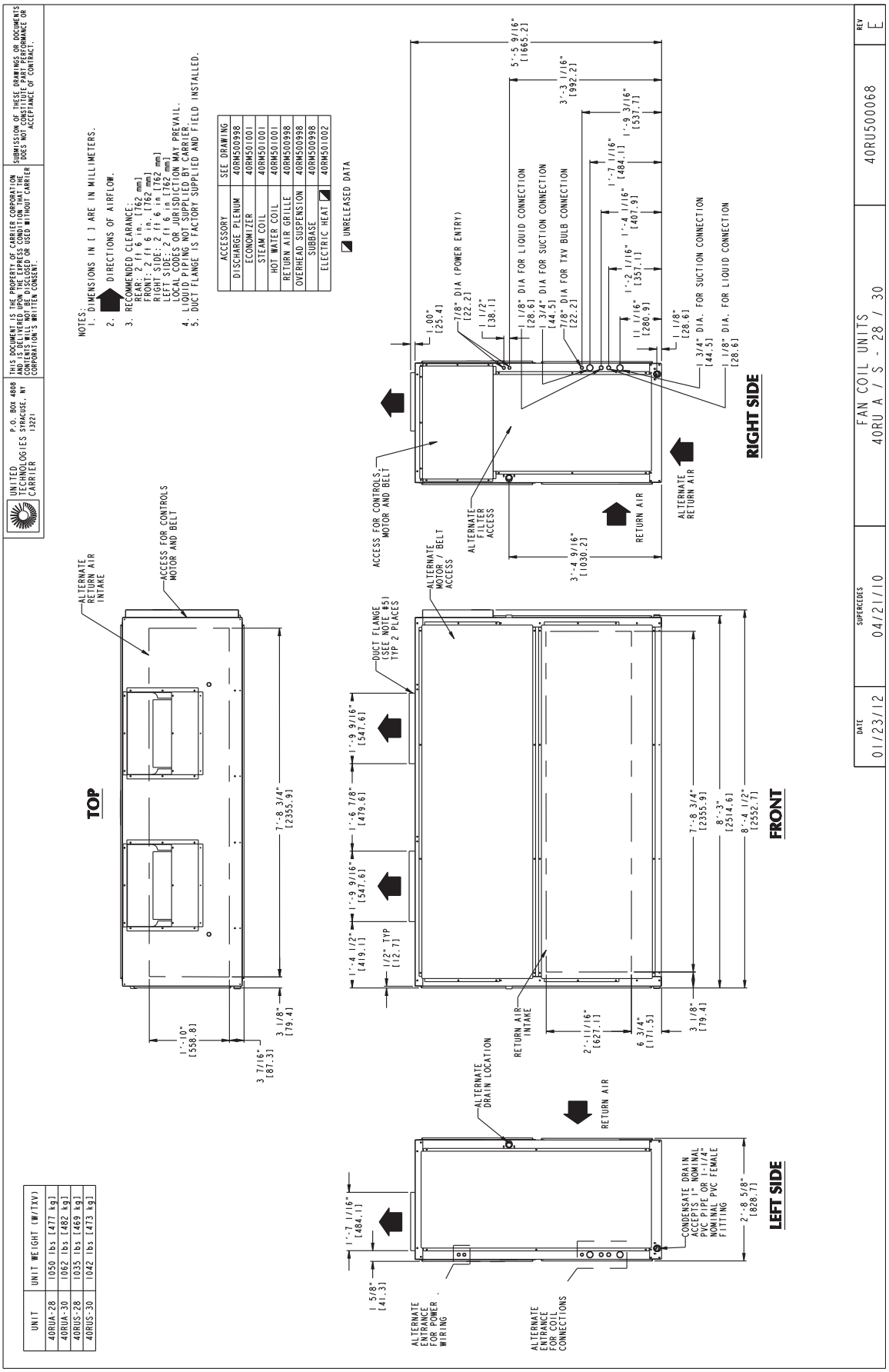

38AU/40RUA OPTIONS AND ACCESSORIES

38AUZ/38AUD Factory-Installed Options

E-coated Aluminum-Fin Coils

Have a flexible and durable epoxy coating uniformly applied to all coil surfaces. Unlike brittle phenolic dip and bake coatings, E-coating provides superior protection with unmatched flexibility, edge coverage, metal adhesion, thermal performance, and most importantly, corrosion resistance.

Pre-coated Coils

Provides protection in mild coastal environments.

Staged Air Volume (SAV™) System

Saves energy and installation time by utilizing a Variable Frequency Drive (VFD) to automatically adjust the indoor fan motor speed in sequence with the unit's cooling operation. Per ASHRAE 90.1 2010 standard section 6.4.3.10.b, during the first stage of cooling operation the VFD will adjust the fan motor to provide two-thirds of the total cfm established for the unit. When a call for the second stage of cooling is required, the VFD will allow the total cfm (100%) established for the unit. During the heating mode the VFD will allow total design cfm (100%) operation and during the ventilation mode the VFD will allow operation to two-thirds of total cfm.

Low-Ambient Temperature Kit (MotorMaster® I) (–20°F [–29°C])

Controls outdoor-fan motor operation to maintain the correct head pressure at low outdoor ambient temperatures.

Louvered Hail Guard

Protects coils against damage from flying debris and hail.

Non-Fused Disconnect Switch

Used to remove power locally at the condensing unit. This switch also includes a power lockout capability to protect the service person. This lockout switch saves the service person time and effort because there is no need to access a distant disconnect switch while servicing the unit.

NOTE: Non-fused disconnect switch cannot be used when unit MOCP electrical rating exceeds 80 amps.

38AUZ/D Field-Installed Accessories

Low-Ambient Temperature Kit (MotorMaster I) (–20°F [–29°C])

Controls outdoor-fan motor operation to maintain the correct head pressure at low outdoor ambient temperatures.

Louvered Hail Guard

Protects coils against damage from flying debris and hail.

Condenser Coil Grille

Protects condensing unit coil from impact by large objects and vandalism.

Thermostats

Provide both programmable and non-programmable capability with the new Carrier line of commercial programmable thermostats. The Commercial Electronic thermostats provide 7-day programmable capability for economical applications.

40RUA Factory-Installed Options

ITEM	OPTION*	ACCESSORY†
Alternate Fan Motors	X	
Alternate Drives	X	
CO_2 Sensors		X
Condensate Drain Trap		X
Discharge Plenum		X
Economizer		X
Electric Heat		X
Hot Water Heating Coils		X
Overhead Suspension Package		X
Prepainted Units	X	
Return Air Grille		X
Steam Heating Coil		X
Subbase		X
Staged Air Volume (SAV)	X	
SAV VFD Display Kit		X

* Factory-installed option.
† Field-installed accessory.

Alternate Fan Motors and Drives

Provide the widest possible range of performance.

Pre-painted Steel Constructed Units

Available from the factory for applications that require painted units. Unit color is American Sterling Gray.

38AUZ/38AUD Factory-Installed Options

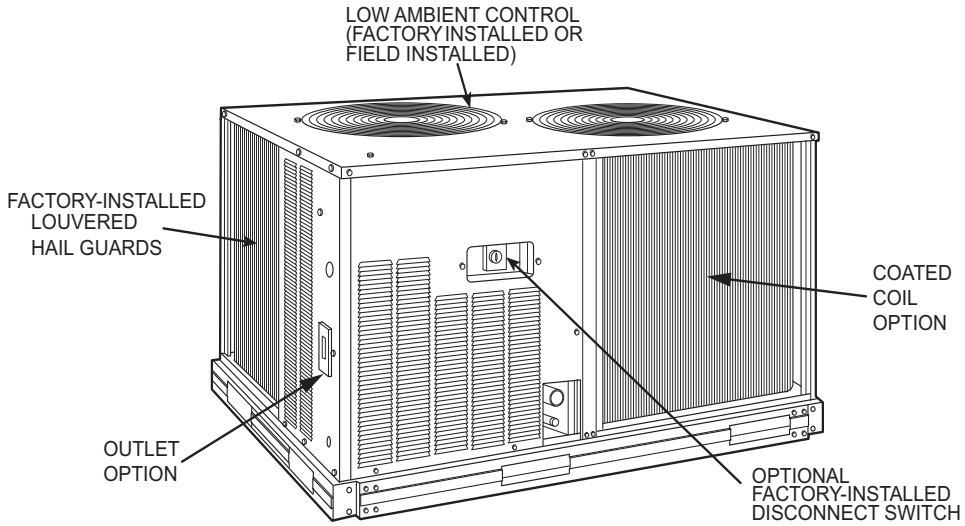

40RUA Field-Installed Accessories

Two-Row Hot Water Coils

The $^5/_8$-in. diameter copper tubes are mechanically bonded to aluminum plate fins. Coils have non-ferrous headers.

One-Row Steam Coil

1-in. OD copper tube and aluminum fins. The Inner Distributing Tube (IDT) design provides uniform temperatures across the coil face. The IDT steam coils are especially suited to applications where sub-freezing air enters the unit.

Electric resistance heat coils

An open-wire design and are mounted in a rigid frame. Safety cutouts for high temperature conditions are standard.

Economizer

Provides ventilation air and provides "free" cooling if the outside ambient temperature and humidity are suitable. The economizer can also be used in conjunction with Carrier Comfort System thermostats and CO_2 sensors to help meet indoor air quality requirements. The economizer can be used in both vertical and horizontal positions.

Discharge Plenum

Directs the air discharge into the occupied space; integral horizontal and vertical louvers enable redirection of airflow. This accessory is available unpainted or painted.

Return-Air Grille

Provides a protective barrier over the return-air opening and gives a finished appearance to units installed in the occupied space. This accessory is available unpainted or painted.

Subbase

A stable, raised platform and room for condensate drain connection for floor-mounted units. This accessory is available unpainted or painted. Overhead suspension package includes necessary brackets to support units in horizontal installations.

CO_2 Sensors

Used in conjunction with the economizer accessory to help meet indoor air quality requirements. The sensor signals the economizer to open when the CO_2 level in the space exceeds the setpoint. A Carrier Comfort System programmable thermostat can also be used to override the sensor if the outside-air temperature is too high or too low.

Condensate Drain Trap

Includes an overflow shutoff switch that can be wired to turn off the unit if the trap becomes plugged. The kit also includes a wire harness that can be connected to an alarm if desired. The transparent trap is designed for easy service and maintenance.

40RUA WITH DISCHARGE PLENUM RETURN-AIR GRILLE AND SUBBASE

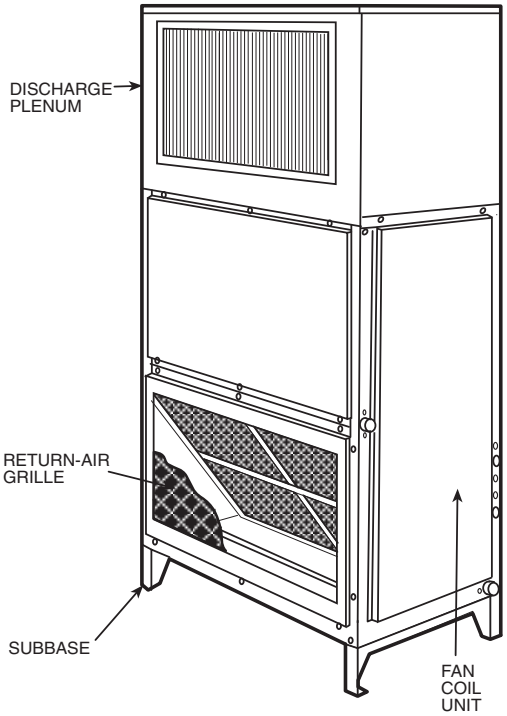

40RUA WITH HOT WATER OR STEAM COIL

40RUA WITH ECONOMIZER

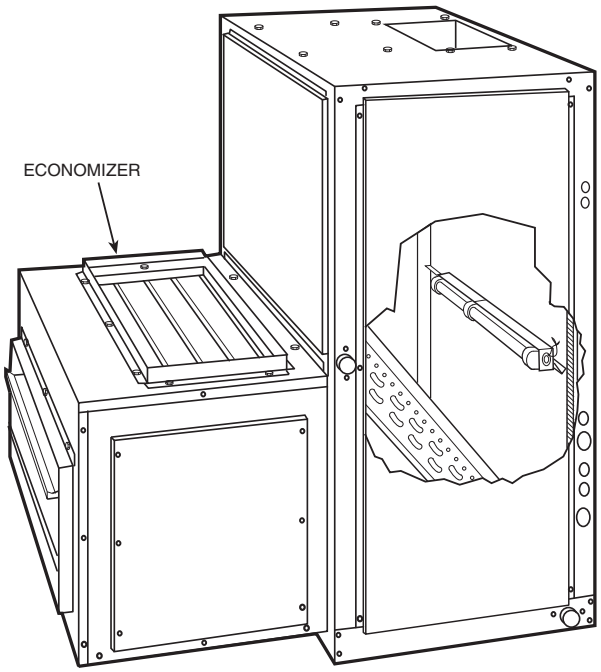

40RUA WITH CONDENSATE TRAP

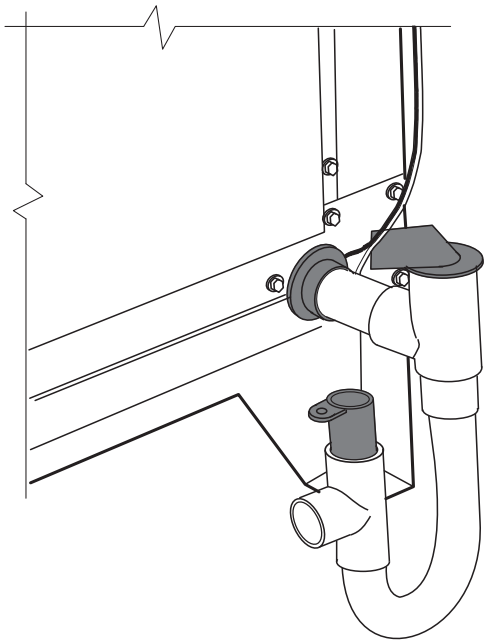

TYPICAL 38AUZ*14 WIRING DIAGRAM (SINGLE CIRCUIT, 208/230-3-60)

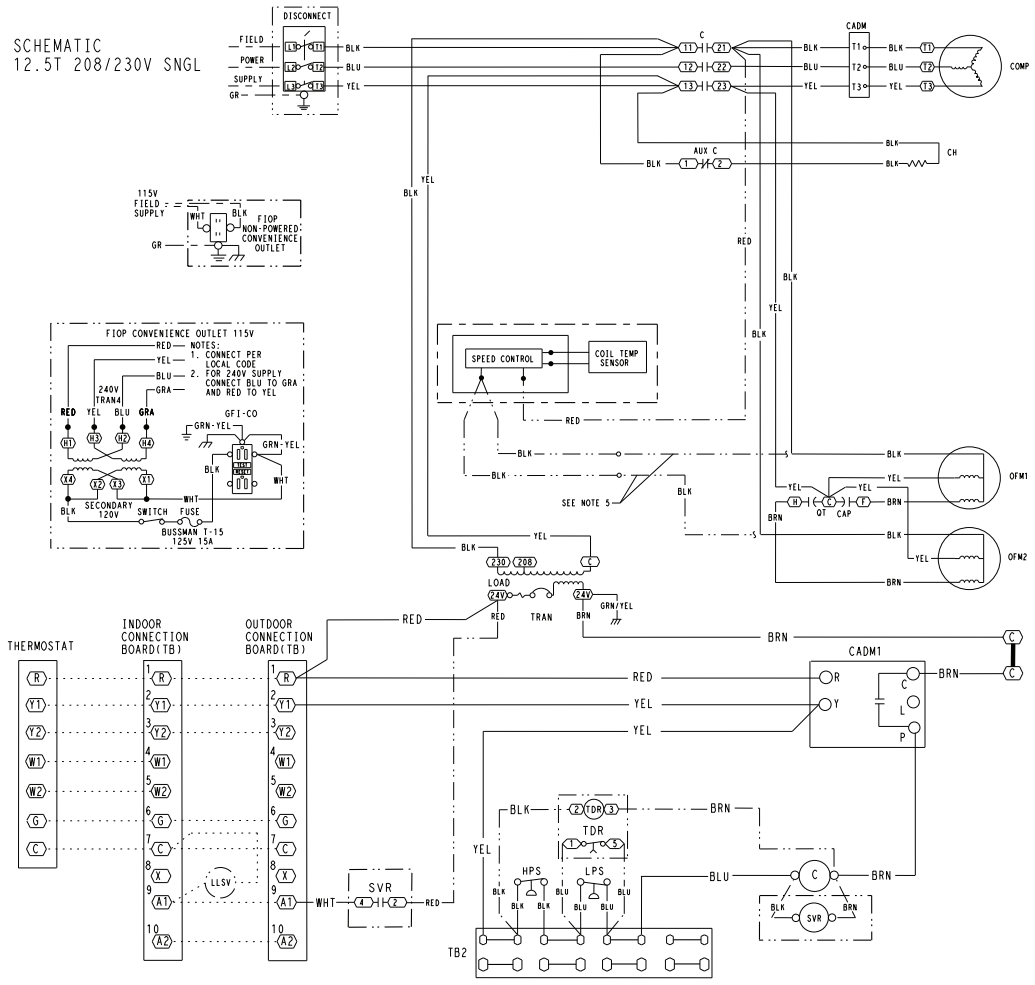

CONTROL BOX COMPONENT ARRANGEMENT

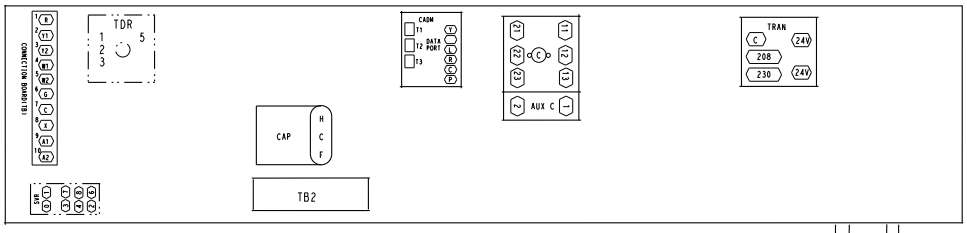

FIELD CONTROL WIRING

- FIELD SPLICE
- MARKED WIRE
- TERMINAL(MARKED)
- TERMINAL(UNMARKED)
- TERMINAL BLOCK
- SPLICE
- FACTORY WIRING
- FIELD CONTROL WIRING
- FIELD POWER WIRING
- ACCESSORY OR OPTIONAL WIRING
- TO INDICATE COMMON POTENTIAL ONLY, NOT TO REPRESENT WIRING

LEGEND

C	CONTACTOR, COMPRESSOR
CAP	CAPACITOR
CADM	COMFORT ALERT - DIAGNOSTICS MODULE
CH	CRANKCASE HEATER
COMP	COMPRESSOR MOTOR
EQUIP	EQUIPMENT
FU	FUSE
GR	GROUND
HPS	HIGH PRESSURE SWITCH
LLSV	LIQUID LINE SOLENOID VALVE
LPS	LOW PRESSURE SWITCH
OFM	OUTDOOR FAN MOTOR
OFR	OUTDOOR FAN RELAY
QT	QUADRUPLE TERMINAL
SVR	SOLENOID VALVE RELAY
TB	TERMINAL BLOCK
TDR	TIME DELAY RELAY
TRAN	TRANSFORMER

FIELD WIRING

DISCONNECT PER NEC

NOTES:

1. IF ANY OF THE ORIGINAL WIRE FURNISHED MUST BE REPLACED, IT MUST BE REPLACED WITH TYPE 90 C WIRE OR ITS EQUIVALENT.
2. USE COPPER CONDUCTORS ONLY.
3. COMPRESSORS AND FAN MOTORS ARE THERMALLY PROTECTED. THREE PHASE MOTORS ARE PROTECTED AGAINST PRIMARY SINGLE PHASING CONDITIONS.
4. TRANSFORMER IS WIRED FOR 230V UNIT. IF UNIT IS TO BE RUN WITH 208V POWER SUPPLY, DISCONNECT BLACK WIRE FROM 230V TAP AND CONNECT TO 208V TAP.
5. ON UNITS WITH SPEED CONTROL, REMOVE OFM1 AND OFM2 BLK WIRES FROM COMPRESSOR CONTACTOR TERMINAL 21 AND CONNECT TO BLK WIRES FROM SPEED CONTROL.

38AU500107 | I

TYPICAL 38AUZ*16 WIRING DIAGRAM (SINGLE CIRCUIT, TANDEM COMPRESSOR, 460-3-60)

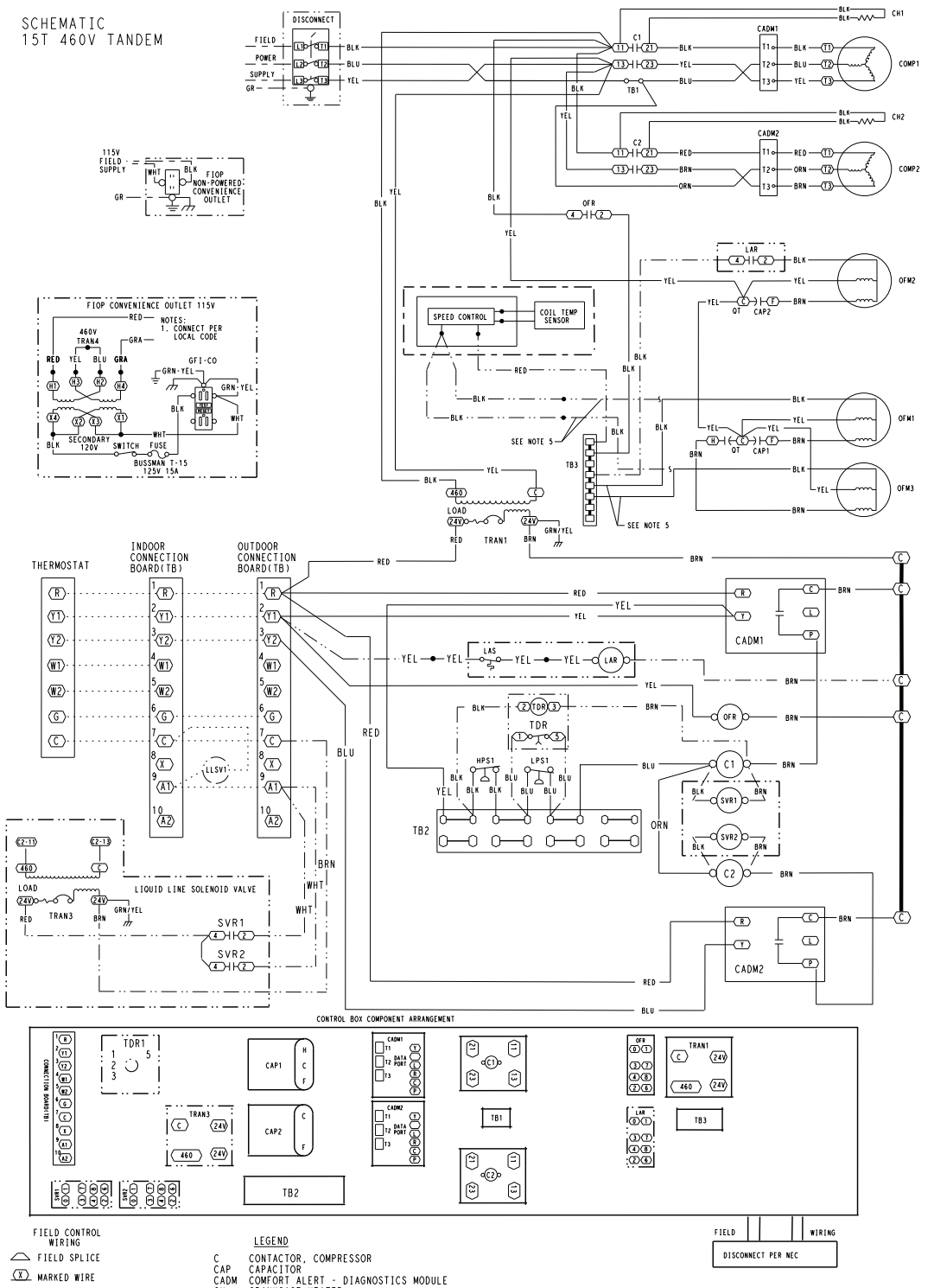

FIELD CONTROL WIRING

- FIELD SPLICE
- MARKED WIRE
- TERMINAL(MARKED)
- TERMINAL(UNMARKED)
- TERMINAL BLOCK
- SPLICE
- FACTORY WIRING
- FIELD CONTROL WIRING
- FIELD POWER WIRING
- ACCESSORY OR OPTIONAL WIRING
- TO INDICATE COMMON POTENTIAL ONLY, NOT TO REPRESENT WIRING

LEGEND

C	CONTACTOR, COMPRESSOR
CAP	CAPACITOR
CADM	COMFORT ALERT - DIAGNOSTICS MODULE
CH	CRANKCASE HEATER
COMP	COMPRESSOR MOTOR
EQUIP	EQUIPMENT
FU	FUSE
GR	GROUND
HPS	HIGH PRESSURE SWITCH
LAR	LOW AMBIENT RELAY
LAS	LOW AMBIENT SWITCH
LLSV	LIQUID LINE SOLENOID VALVE
LPS	LOW PRESSURE SWITCH
OFM	OUTDOOR FAN MOTOR
OFR	OUTDOOR FAN RELAY
QT	QUADRUPLE TERMINAL
SVR	SOLENOID VALVE RELAY
TB	TERMINAL BLOCK
TDR	TIME DELAY RELAY
TRAN	TRANSFORMER

NOTES:

1. IF ANY OF THE ORIGINAL WIRE FURNISHED MUST BE REPLACED, IT MUST BE REPLACED WITH TYPE 90 C WIRE OR ITS EQUIVALENT.
2. USE COPPER CONDUCTORS ONLY.
3. COMPRESSORS AND FAN MOTORS ARE THERMALLY PROTECTED. THREE PHASE MOTORS ARE PROTECTED AGAINST PRIMARY SINGLE PHASING CONDITIONS.
4. TRANSFORMER IS WIRED FOR 460V UNIT.
5. ON UNITS WITH SPEED CONTROL, REMOVE OFM1 AND OFM3 BLK WIRES FROM TB3 AND CONNECT TO BLK WIRES FROM SPEED CONTROL.

38AU500538 | B

TYPICAL 38AUD*16 WIRING DIAGRAM (DUAL CIRCUIT, 460-3-60)

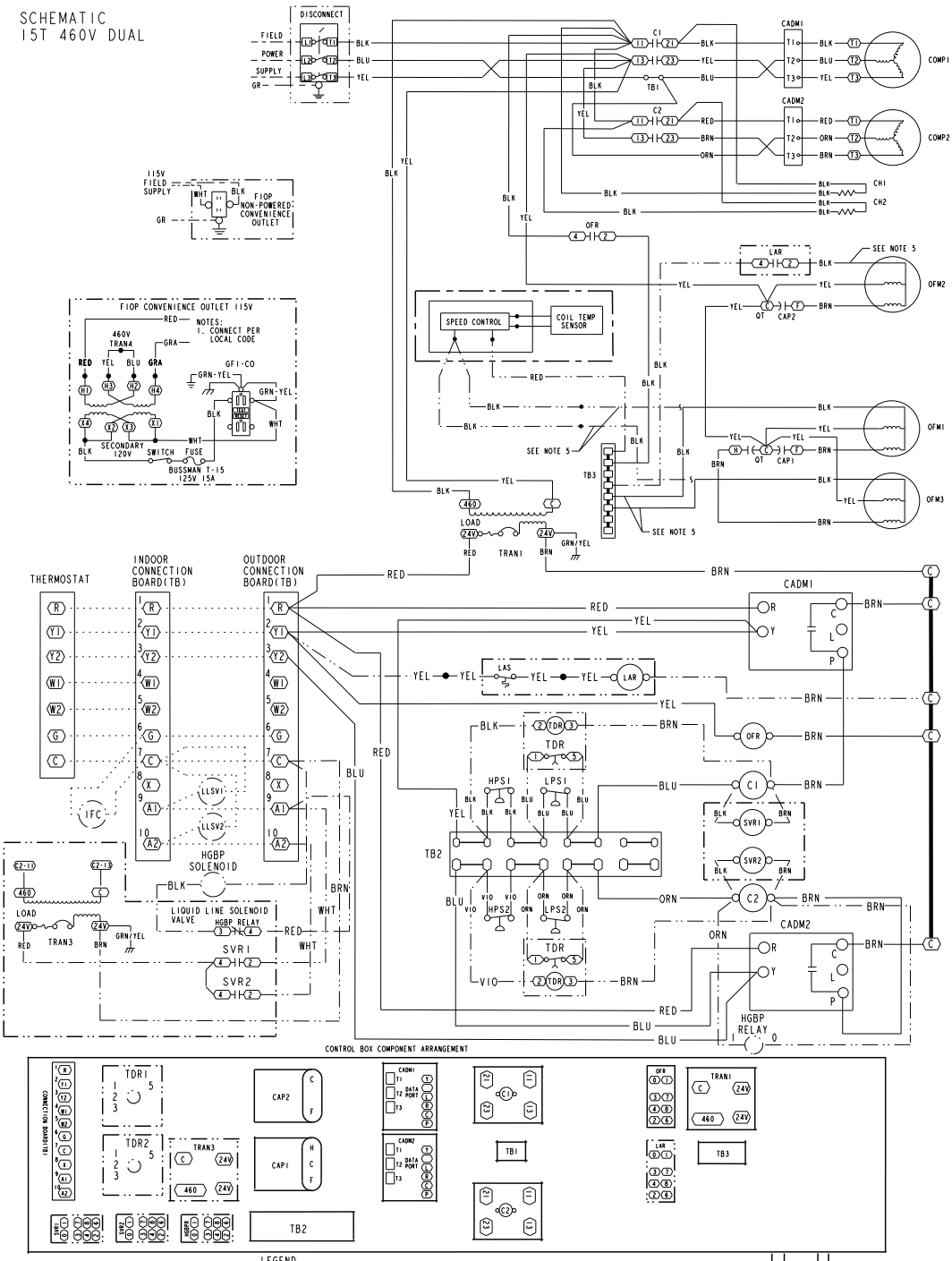

FIELD CONTROL WIRING
- FIELD SPLICE
- MARKED WIRE
- TERMINAL(MARKED)
- TERMINAL(UNMARKED)
- TERMINAL BLOCK
- SPLICE
- FACTORY WIRING
- FIELD CONTROL WIRING
- FIELD POWER WIRING
- ACCESSORY OR OPTIONAL WIRING
- TO INDICATE COMMON POTENTIAL ONLY, NOT TO REPRESENT WIRING

LEGEND

C	CONTACTOR, COMPRESSOR
CAP	CAPACITOR
CADM	COMFORT ALERT - DIAGNOSTICS MODULE
CH	CRANKCASE HEATER
COFS	CONDENSATE OVERFLOW SWITCH
COMP	COMPRESSOR MOTOR
EQUIP	EQUIPMENT
FU	FUSE
GR	GROUND
HGBP	HOT GAS BYPASS
HPS	HIGH PRESSURE SWITCH
IFC	INDOOR FAN CONTACTOR
LAR	LOW AMBIENT RELAY
LAS	LOW AMBIENT SWITCH
LLSV	LIQUID LINE SOLENOID VALVE
LPS	LOW PRESSURE SWITCH
OFM	OUTDOOR FAN MOTOR
OFR	OUTDOOR FAN RELAY
QT	QUADRUPLE TERMINAL
SVR	SOLENOID VALVE RELAY
TB	TERMINAL BLOCK
TDR	TIME DELAY RELAY
TRAN	TRANSFORMER

LEGEND

HGBPR HOT GAS BYPASS RELAY

NOTES:

1. IF ANY OF THE ORIGINAL WIRE FURNISHED MUST BE REPLACED, IT MUST BE REPLACED WITH TYPE 90 C WIRE OR ITS EQUIVALENT.
2. USE COPPER CONDUCTORS ONLY.
3. COMPRESSORS AND FAN MOTORS ARE THERMALLY PROTECTED. THREE PHASE MOTORS ARE PROTECTED AGAINST PRIMARY SINGLE PHASING CONDITIONS.
4. TRANSFORMER IS WIRED FOR 460V UNIT.
5. ON UNITS WITH SPEED CONTROL, CONNECT THE BLACK WIRES FROM OFM1 AND OFM3 TO BLK WIRES FROM SPEED CONTROL MODULE AND CONNECT THE BLACK WIRE FROM OFM2 TO TERMINAL 2 ON THE LOW AMBIENT RELAY (LAR).

38AU500541 | E

ROOF INSTALLATION AND A CEILING-MOUNTED FAN COIL

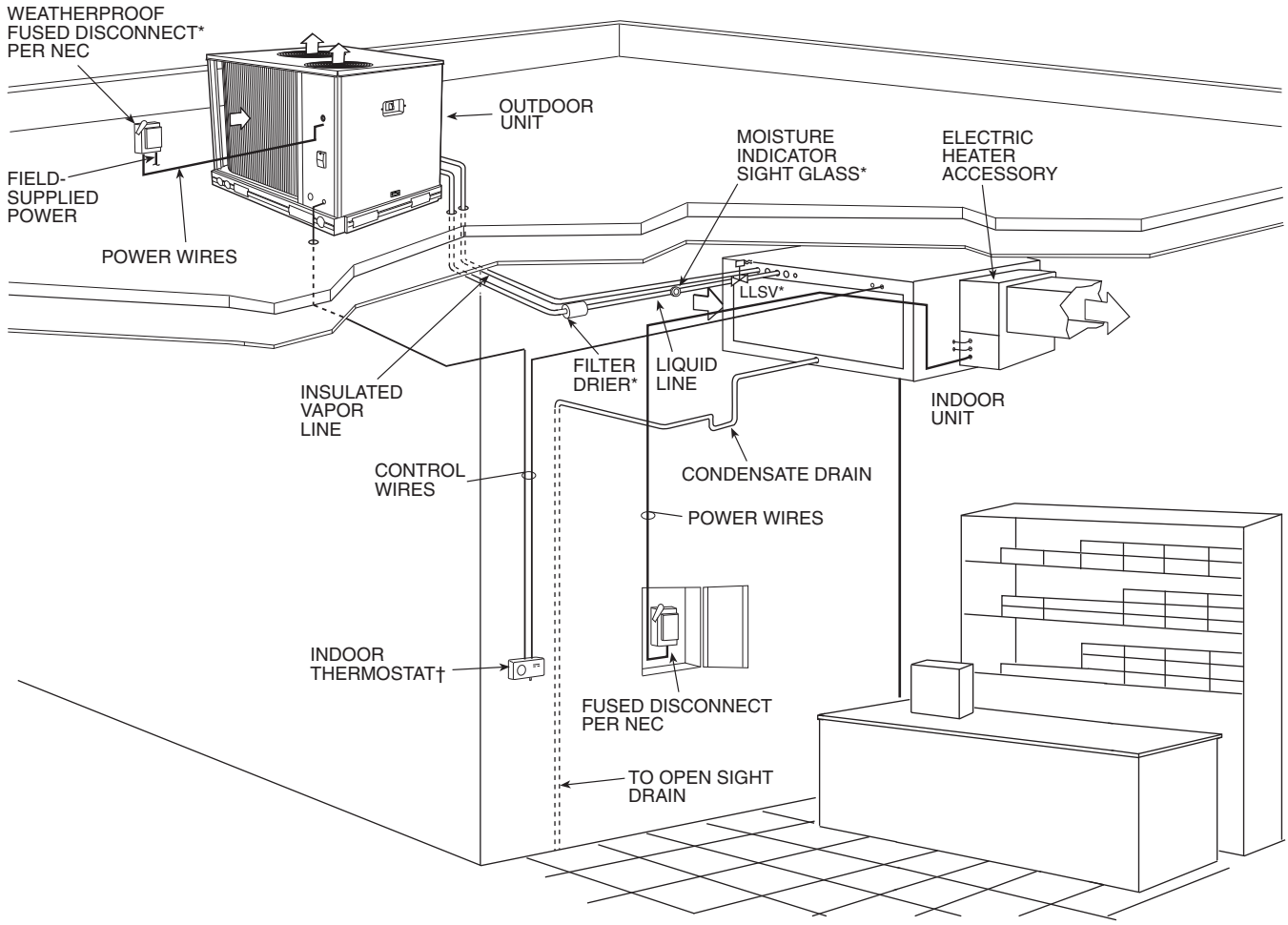

LEGEND

LLSV — Liquid Line Solenoid Valve
NEC — National Electrical Code
TXV — Thermostatic Expansion Valve

* Field-supplied.
† Double riser may be required. Consult condensing unit product data catalog for details.

NOTES:

1. All piping must follow standard refrigerant piping techniques. Refer to Carrier System Design Manual for details.
2. All wiring must comply with the applicable local and national codes.
3. Wiring and piping shown are general points-of-connection guides only and are not intended for, or to include all details for, a specific installation.
4. Liquid line solenoid valve (solenoid drop control) is recommended to prevent refrigerant migration to the compressor.
5. Internal factory-supplied TXVs not shown.

Typical piping and wiring (cont)

ROOF INSTALLATION AND A VERTICAL DISCHARGE FAN COIL

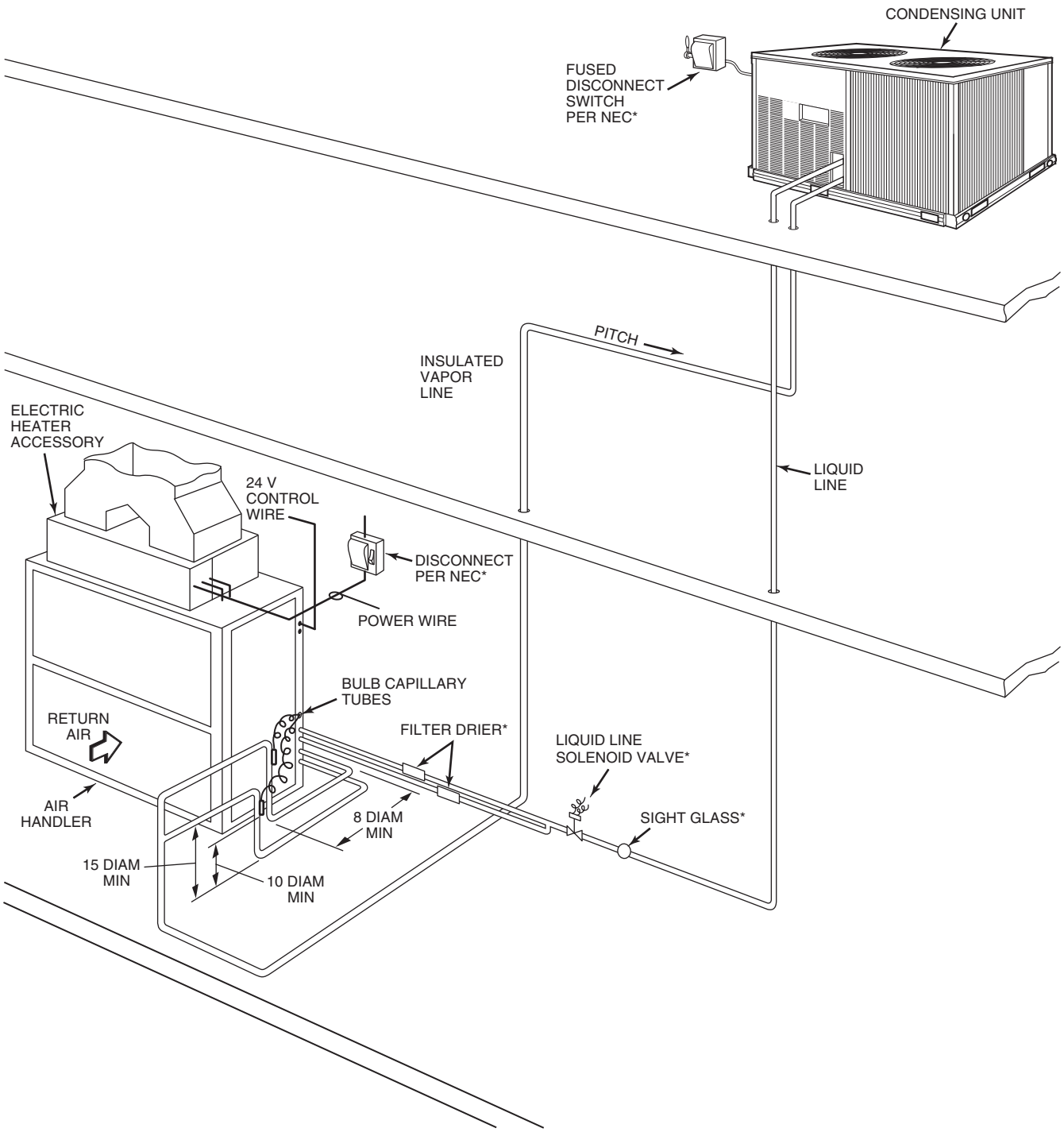

LEGEND
DIAM — Diameter
NEC — National Electrical Code
TXV — Thermostatic Expansion Valve
Piping

*Field supplied.

NOTES:
1. All piping must follow standard refrigerant piping techniques. Refer to System Design Manual for details.
2. All wiring must comply with applicable local and national codes.
3. Wiring and piping shown are general points-of-connection guides only and are not intended for, or to include all details for, a specific installation.
4. Liquid line solenoid valve (solenoid drop control) is recommended to prevent refrigerant migration to the compressor on line links above 75 feet.
5. Internal factory-supplied TXVs and check valves not shown.

GROUND INSTALLATION AND VERTICAL DISCHARGE FAN COIL

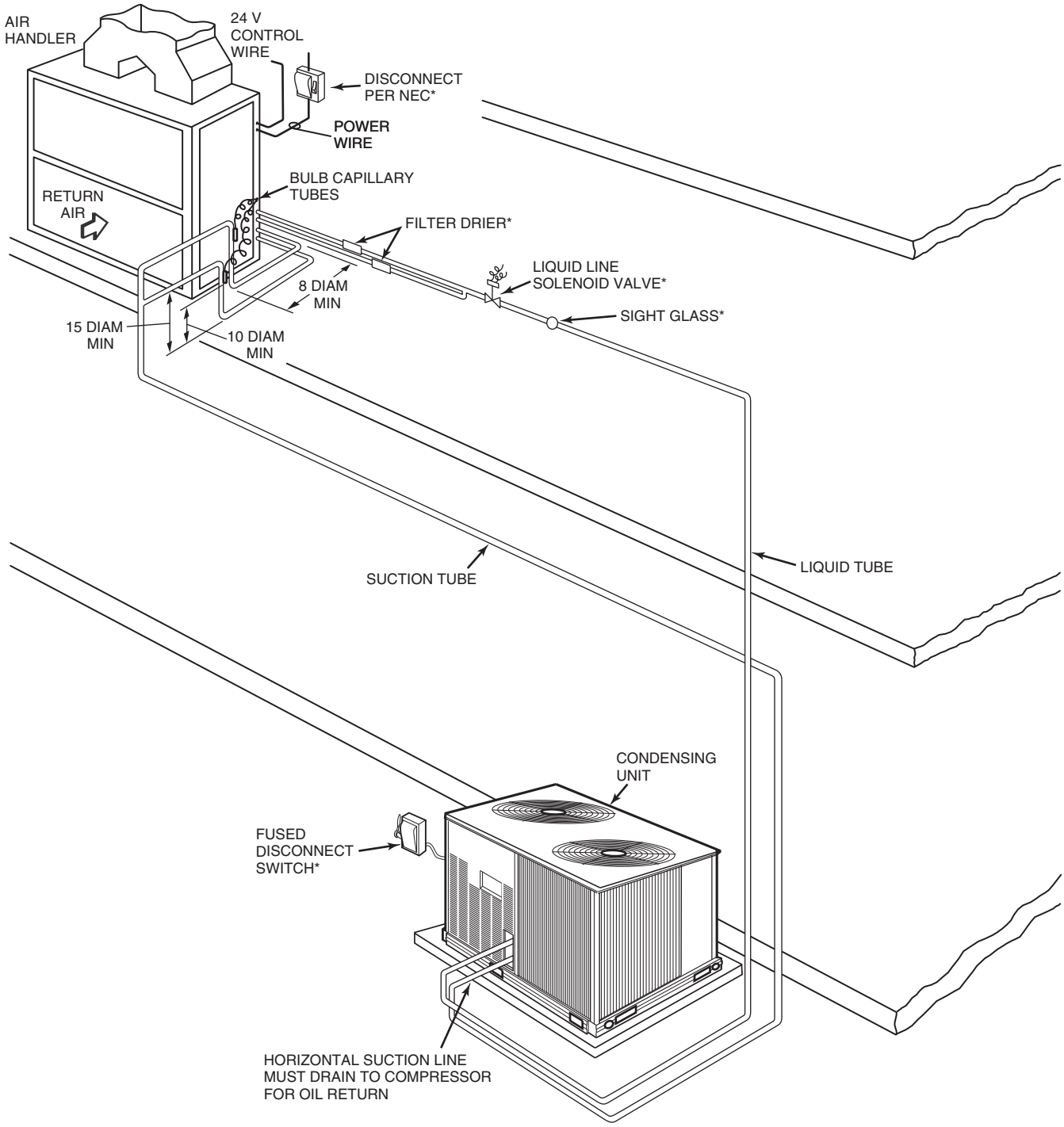

LEGEND
DIAM — Diameter
NEC — National Electrical Code
TXV — Thermostatic Expansion Valve
Piping

*Field supplied.

NOTES:
1. All piping must follow standard refrigerant piping techniques. Refer to System Design Manual for details.
2. All wiring must comply with applicable local and national codes.
3. Wiring and piping shown are general points-of-connection guides only and are not intended for, or to include all details for, a specific installation.
4. Liquid line solenoid valve (solenoid drop control) is recommended to prevent refrigerant migration to the compressor on line links above 75 feet.
5. Internal factory-supplied TXVs and check valves not shown.

Typical piping and wiring (cont)

DUAL CONDENSING UNITS AND A DUAL CIRCUIT FAN COIL

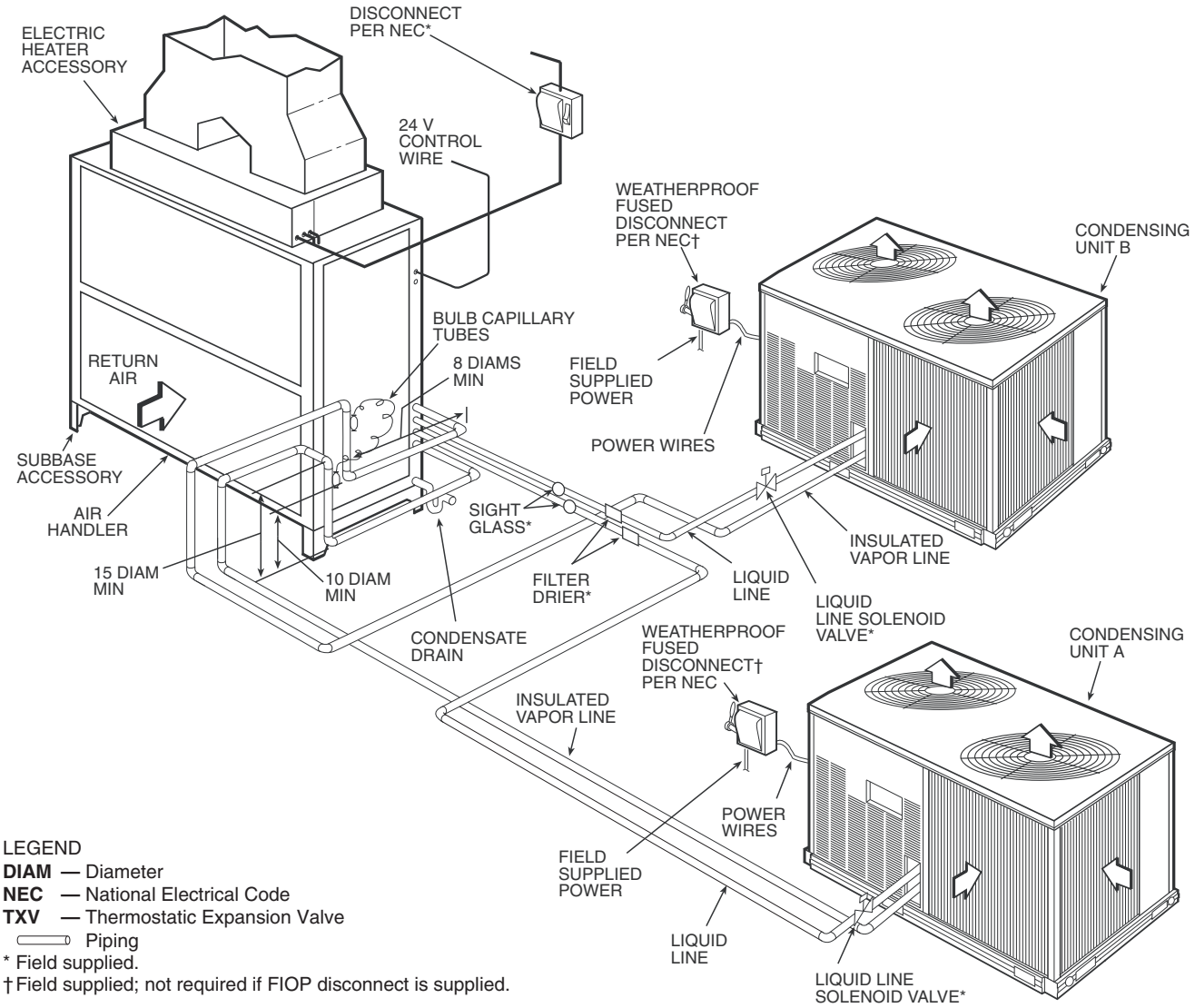

LEGEND
DIAM — Diameter
NEC — National Electrical Code
TXV — Thermostatic Expansion Valve
Piping
* Field supplied.
† Field supplied; not required if FIOP disconnect is supplied.

NOTES:
1. All piping must follow standard refrigerant piping techniques. Refer to System Design Manual for details.
2. All wiring must comply with applicable local and national codes.
3. Wiring and piping shown are general points-of-connection guides only and are not intended for, or to include all details for, a specific installation.
4. Liquid line solenoid valve (solenoid drop control) is recommended to prevent refrigerant migration to the compressor on line links above 75 feet.
5. Condensing Unit A should be the first on, last off and be connected to the lower half of the coil.
6. Internal factory-supplied TXVs and check valves not shown.

38AUZ07 TOTAL UNIT — CONDENSER ONLY RATINGS — 60 Hz

38AUZ07							
SST (F)		Air Temperature Entering Condenser (F)					
		80	85	95	100	105	115
20	TC	46.70	45.10	41.70	39.80	37.90	33.90
	kW	4.04	4.27	4.77	5.04	5.32	5.93
	SDT	91.60	96.40	105.90	110.60	115.30	124.70
25	TC	51.70	50.00	46.40	44.50	42.50	38.30
	kW	4.06	4.29	4.79	5.05	5.33	5.95
	SDT	92.70	97.50	106.90	111.60	116.30	125.60
30	TC	57.00	55.20	51.40	49.40	47.30	42.90
	kW	4.07	4.30	4.80	5.07	5.35	5.96
	SDT	93.90	98.60	108.10	112.70	117.40	126.70
35	TC	62.70	60.80	56.80	54.60	52.40	47.80
	kW	4.09	4.32	4.81	5.08	5.36	5.98
	SDT	95.10	99.80	109.20	113.90	118.60	127.80
40	TC	68.70	66.70	62.50	60.20	57.90	53.00
	kW	4.11	4.34	4.83	5.10	5.38	5.99
	SDT	96.50	101.10	110.50	115.10	119.70	128.80
45	TC	75.20	73.10	68.50	66.20	63.70	58.60
	kW	4.13	4.36	4.84	5.10	5.38	5.99
	SDT	97.90	102.50	111.80	116.30	120.90	129.90
50	TC	82.20	79.90	75.10	72.50	69.90	64.40
	kW	4.15	4.37	4.85	5.12	5.39	6.00
	SDT	99.40	104.00	113.10	117.60	122.20	131.10

38AUZ08 TOTAL UNIT — CONDENSER ONLY RATINGS — 60 Hz

38AUZ08							
SST (F)		Air Temperature Entering Condenser (F)					
		80	85	95	100	105	115
20	TC	65.20	63.20	59.10	57.00	54.80	50.50
	kW	5.04	5.33	5.98	6.34	6.73	7.60
	SDT	95.30	100.20	109.80	114.70	119.50	129.20
25	TC	71.30	69.20	64.80	62.60	60.30	55.70
	kW	5.12	5.42	6.07	6.42	6.81	7.66
	SDT	96.40	101.20	110.80	115.60	120.40	129.90
30	TC	77.80	75.50	70.90	68.50	66.20	61.30
	kW	5.22	5.51	6.16	6.51	6.89	7.74
	SDT	97.60	102.40	111.90	116.60	121.30	130.70
35	TC	84.80	82.40	77.50	75.00	72.40	67.20
	kW	5.32	5.61	6.26	6.61	6.99	7.83
	SDT	98.80	103.50	112.90	117.60	122.30	131.60
40	TC	92.30	89.70	84.50	81.80	79.00	73.50
	kW	5.44	5.73	6.37	6.72	7.10	7.94
	SDT	100.10	104.80	114.20	118.80	123.50	132.70
45	TC	100.30	97.50	91.90	89.00	86.10	80.10
	kW	5.57	5.86	6.50	6.85	7.23	8.07
	SDT	101.60	106.20	115.50	120.20	124.80	133.90
50	TC	108.70	105.80	99.80	96.70	93.60	87.30
	kW	5.71	6.00	6.64	7.00	7.38	8.21
	SDT	103.10	107.80	117.00	121.60	126.20	135.30

LEGEND

kW — Compressor Motor Power Input
SDT — Saturated Discharge Temperature (F)
SST — Saturated Suction Temperature
TC — Total Capacity (1000 Btuh) gross

Performance data (cont)

38AUZ12 TOTAL UNIT — CONDENSER ONLY RATINGS — 60 Hz

38AUZ12							
SST (F)		Air Temperature Entering Condenser (F)					
		80	85	95	100	105	115
20	TC	78.00	75.40	70.10	67.30	64.60	58.90
	kW	6.03	6.44	7.31	7.76	8.23	9.21
	SDT	94.00	98.70	108.20	113.00	117.70	127.20
25	TC	86.10	83.30	77.60	74.70	71.70	65.70
	kW	6.11	6.53	7.41	7.87	8.36	9.36
	SDT	95.20	100.00	109.40	114.20	118.90	128.20
30	TC	94.70	91.80	85.60	82.50	79.40	73.00
	kW	6.20	6.62	7.51	7.98	8.47	9.49
	SDT	96.60	101.30	110.70	115.40	120.00	129.20
35	TC	104.00	100.80	94.30	90.90	87.60	80.70
	kW	6.30	6.71	7.61	8.09	8.58	9.62
	SDT	98.10	102.70	112.00	116.60	121.20	130.40
40	TC	113.90	110.40	103.40	99.90	96.20	88.90
	kW	6.39	6.81	7.71	8.20	8.70	9.75
	SDT	99.50	104.20	113.40	117.90	122.50	131.60
45	TC	124.30	120.60	113.10	109.20	105.40	97.50
	kW	6.49	6.92	7.83	8.32	8.82	9.89
	SDT	101.10	105.70	114.80	119.40	123.90	132.90
50	TC	135.40	131.40	123.30	119.20	115.00	106.50
	kW	6.61	7.04	7.96	8.45	8.96	10.03
	SDT	102.80	107.30	116.40	120.90	125.40	134.30

38AUD12 CIRCUIT A AND B UNIT — CONDENSER ONLY RATINGS — 60 Hz

38AUD12 Circuit A plus B							
SST (F)		Air Temperature Entering Condenser (F)					
		85	95	100	105	115	120
20	TC	75.29	69.95	67.18	64.32	58.42	55.21
	kW	6.88	7.89	8.43	8.96	10.04	10.53
	SDT	102.30	111.40	116.10	120.50	129.60	133.70
25	TC	83.12	77.31	74.32	71.28	64.99	61.76
	kW	6.97	7.98	8.53	9.07	10.18	10.73
	SDT	103.60	112.60	117.30	121.80	130.70	135.10
30	TC	91.41	85.21	81.99	78.76	72.08	68.58
	kW	7.06	8.08	8.63	9.18	10.31	10.87
	SDT	104.90	114.00	118.50	122.90	131.80	136.10
35	TC	100.35	93.69	90.26	86.76	85.11	75.65
	kW	7.15	8.18	8.73	9.29	10.42	10.99
	SDT	106.30	115.20	119.80	124.20	132.90	137.10
40	TC	109.90	102.58	98.84	95.06	87.13	83.07
	kW	7.25	8.29	8.83	9.39	10.54	11.12
	SDT	107.60	116.60	121.00	125.40	134.00	138.20
45	TC	119.86	111.84	107.74	103.56	95.02	90.54
	kW	7.36	8.39	8.93	9.49	10.64	11.22
	SDT	109.00	117.90	122.30	126.60	135.10	139.20
50	TC	130.20	121.39	116.90	112.33	103.07	98.17
	kW	7.48	8.51	9.04	9.60	10.75	11.33
	SDT	110.50	119.20	123.50	127.80	136.20	140.20

LEGEND

kW — Compressor Motor Power Input
SDT — Saturated Discharge Temperature (F)
SST — Saturated Suction Temperature
TC — Total Capacity (1000 Btuh) gross

38AUZ14 TOTAL UNIT — CONDENSER ONLY RATINGS — 60 Hz

38AUZ14							
SST (F)		Air Temperature Entering Condenser (F)					
		80	85	95	100	105	115
20	TC	100.80	97.40	90.30	86.60	83.00	75.50
	kW	8.48	8.97	10.00	10.53	11.07	12.19
	SDT	98.00	102.60	111.80	116.40	120.90	130.00
25	TC	111.50	107.80	100.20	96.30	92.40	84.40
	kW	8.66	9.15	10.20	10.75	11.31	12.47
	SDT	99.60	104.10	113.20	117.70	122.30	131.30
30	TC	122.90	118.90	110.70	106.60	102.40	93.90
	kW	8.84	9.35	10.41	10.97	11.55	12.75
	SDT	101.30	105.80	114.80	119.30	123.80	132.70
35	TC	134.90	130.60	121.90	117.40	113.00	103.80
	kW	9.05	9.55	10.64	11.21	11.80	13.03
	SDT	103.10	107.60	116.50	120.90	125.40	134.20
40	TC	147.70	143.00	133.70	128.90	124.10	114.30
	kW	9.27	9.78	10.88	11.47	12.07	13.32
	SDT	105.10	109.50	118.30	122.80	127.10	135.80
45	TC	161.10	156.20	146.10	141.00	135.80	125.40
	kW	9.51	10.03	11.15	11.73	12.34	13.61
	SDT	107.20	111.60	120.30	124.70	129.00	137.50
50	TC	175.40	170.10	159.30	153.80	148.30	137.10
	kW	9.78	10.30	11.42	12.02	12.63	13.92
	SDT	109.50	113.80	122.40	126.70	130.90	139.40

38AUD14 CIRCUIT A AND B — CONDENSER ONLY RATINGS — 60 Hz

38AUD14 Circuit A plus B							
SST (F)		Air Temperature Entering Condenser (F)					
		85	95	100	105	115	120
20	TC	93.24	86.18	82.60	78.94	71.54	67.78
	kW	9.22	10.36	10.96	11.56	12.76	13.37
	SDT	104.40	113.30	117.80	122.20	130.90	135.20
25	TC	103.39	95.91	92.05	88.15	80.16	76.08
	kW	9.42	10.60	11.21	11.83	13.10	13.73
	SDT	106.10	114.90	119.30	123.70	132.30	136.60
30	TC	114.29	106.19	102.04	97.79	89.15	84.74
	kW	9.63	10.84	11.46	12.10	13.41	14.07
	SDT	107.80	116.60	120.90	125.30	133.80	138.00
35	TC	125.69	116.93	112.44	107.84	105.72	93.69
	kW	9.84	11.07	11.71	12.36	13.70	14.38
	SDT	109.50	118.20	122.60	126.80	135.20	139.40
40	TC	137.57	128.07	123.21	118.21	108.08	102.90
	kW	10.05	11.30	11.95	12.61	13.98	14.68
	SDT	111.30	119.90	124.20	128.40	136.70	140.80
45	TC	149.86	139.53	134.26	128.83	117.83	112.22
	kW	10.27	11.53	12.18	12.85	14.24	14.95
	SDT	113.10	121.60	125.80	130.00	138.10	142.10
50	TC	162.51	151.29	145.56	139.64	127.71	121.55
	kW	10.50	11.76	12.42	13.09	14.48	15.20
	SDT	114.90	123.30	127.50	131.60	139.60	143.50

LEGEND

kW — Compressor Motor Power Input
SDT — Saturated Discharge Temperature (F)
SST — Saturated Suction Temperature
TC — Total Capacity (1000 Btuh) gross

38AUD16 TOTAL UNIT — CONDENSER ONLY RATINGS — 60 Hz

38AUD16 Total Unit							
SST (F)		Air Temperature Entering Condenser (F)					
		80	85	95	105	115	125
20	TC	127.6	123.7	116.0	108.1	99.7	90.2
	kW	10.0	10.6	11.9	13.4	14.9	16.6
	SDT	96.0	100.5	109.8	119.2	128.3	137.0
25	TC	140.9	136.7	128.3	119.5	110.4	101.2
	kW	10.0	10.6	11.9	13.4	14.9	16.6
	SDT	96.0	100.5	109.8	119.2	128.3	137.0
30	TC	155.0	150.5	141.3	132.0	122.3	111.4
	kW	10.4	11.0	12.3	13.7	15.3	17.0
	SDT	98.7	103.3	112.4	121.5	130.6	139.1
35	TC	170.1	165.3	155.4	145.2	134.4	123.3
	kW	10.6	11.2	12.5	14.0	15.5	17.2
	SDT	100.1	104.7	113.8	122.8	131.7	140.4
40	TC	186.3	181.0	170.3	159.0	147.3	134.9
	kW	10.8	11.4	12.8	14.2	15.8	17.4
	SDT	101.6	106.1	115.1	124.0	132.8	141.4
45	TC	203.4	197.6	185.7	173.5	160.6	147.2
	kW	11.1	11.7	13.0	14.4	16.0	17.6
	SDT	103.2	107.6	116.5	125.4	134.0	142.5
50	TC	221.4	214.9	202.0	188.6	174.5	159.7
	kW	11.4	12.0	13.3	14.7	16.2	17.9
	SDT	104.8	109.2	118.0	126.7	135.2	143.5

38AUZ16 TOTAL UNIT — CONDENSER ONLY RATINGS — 60 Hz

38AUZ16							
SST (F)		Air Temperature Entering Condenser (F)					
		80	85	95	105	115	125
20	TC	125.5	121.8	114.2	106.6	99.7	79.7
	kW	10.5	11.2	12.6	14.2	16.0	17.5
	SDT	98.6	103.4	113.0	122.7	134.9	136.0
25	TC	138.7	134.7	126.5	118.1	109.3	98.5
	kW	10.7	11.4	12.8	14.3	16.0	17.9
	SDT	100.0	104.7	114.2	123.6	132.9	140.5
30	TC	152.9	148.6	139.8	130.7	120.9	104.9
	kW	10.9	11.6	13.0	14.6	16.2	17.8
	SDT	101.4	106.2	115.5	125.0	133.6	139.4
35	TC	168.2	163.5	154.1	144.2	133.6	121.2
	kW	11.2	11.8	13.2	14.8	16.5	18.1
	SDT	102.9	107.5	117.0	126.2	134.8	142.1
40	TC	184.9	179.4	169.3	158.7	147.6	135.1
	kW	11.5	12.0	13.5	15.1	16.8	18.5
	SDT	105.2	108.9	118.5	127.7	136.7	144.5
45	TC	202.1	196.7	185.7	174.3	162.5	150.4
	kW	11.7	12.4	13.9	15.6	17.5	19.6
	SDT	106.4	111.2	120.9	130.7	140.4	150.2
50	TC	220.6	214.7	202.1	190.0	174.6	159.6
	kW	11.9	12.6	13.9	15.4	16.9	18.5
	SDT	107.2	111.7	120.4	129.4	136.9	144.9

LEGEND

kW — Compressor Motor Power Input
SDT — Saturated Discharge Temperature (F)
SST — Saturated Suction Temperature
TC — Total Capacity (1000 Btuh) gross

38AUD25 TOTAL UNIT — CONDENSER ONLY RATINGS — 60 Hz

38AUD25 Total Unit							
SST (F)		Air Temperature Entering Condenser (F)					
		80	85	95	105	115	125
20	TC	160.3	155.5	145.3	134.3	122.5	109.6
	kW	12.7	13.4	15.0	16.8	18.8	21.1
	SDT	97.0	101.5	110.3	119.1	127.7	136.3
25	TC	177.2	171.9	160.8	149.0	136.3	122.3
	kW	12.7	13.4	15.0	16.8	18.8	21.1
	SDT	97.0	101.5	110.3	119.1	127.7	136.3
30	TC	195.1	189.4	177.4	164.5	150.7	135.6
	kW	13.2	13.9	15.5	17.3	19.3	21.5
	SDT	100.3	104.6	113.3	121.8	130.3	138.6
35	TC	214.3	208.0	194.9	180.9	165.9	149.5
	kW	13.5	14.3	15.8	17.6	19.6	21.8
	SDT	102.1	106.3	114.9	123.3	131.7	139.8
40	TC	234.6	227.7	213.4	198.2	181.7	163.9
	kW	13.9	14.6	16.2	17.9	19.9	22.1
	SDT	104.0	108.2	116.6	124.9	133.1	141.1
45	TC	256.3	258.7	242.3	224.9	206.2	186.1
	kW	14.3	15.2	16.7	18.5	20.4	22.5
	SDT	106.0	111.1	119.2	127.4	135.4	143.1
50	TC	279.1	272.0	254.7	236.3	216.6	195.4
	kW	14.7	15.5	17.0	18.7	20.6	22.7
	SDT	108.1	112.3	120.4	128.4	136.4	143.9

38AUZ25 TOTAL UNIT — CONDENSER ONLY RATINGS — 60 Hz

38AUZ25							
SST (F)		Air Temperature Entering Condenser (F)					
		80	85	95	105	115	125
20	TC	159.2	154.5	144.5	133.9	122.5	110.2
	kW	13.0	13.7	15.3	17.1	19.2	21.5
	SDT	97.3	101.8	110.6	119.3	127.9	136.5
25	TC	176.1	171.0	160.2	148.8	136.5	123.2
	kW	13.2	14.0	15.6	17.4	19.5	21.8
	SDT	98.9	103.3	112.0	120.7	129.2	137.6
30	TC	194.2	188.6	176.9	164.5	151.3	136.9
	kW	13.5	14.3	15.9	17.7	19.7	22.0
	SDT	100.6	104.9	113.6	122.1	130.5	138.8
35	TC	213.5	207.4	194.7	181.2	166.8	151.2
	kW	13.8	14.6	16.2	18.0	20.0	22.3
	SDT	102.4	106.7	115.2	123.6	131.9	140.1
40	TC	234.1	227.4	213.5	198.8	183.1	166.1
	kW	14.2	14.9	16.5	18.3	20.3	22.6
	SDT	104.3	108.5	116.9	125.2	133.3	141.4
45	TC	255.9	248.6	233.3	217.3	200.1	181.7
	kW	14.6	15.3	16.9	18.7	20.7	22.9
	SDT	106.3	110.5	118.7	126.8	134.9	142.7
50	TC	279.0	270.9	254.2	236.7	218.1	197.8
	kW	15.1	15.8	17.3	19.1	21.1	23.2
	SDT	108.5	112.5	120.6	128.6	136.5	144.1

LEGEND

kW — Compressor Motor Power Input
SDT — Saturated Discharge Temperature (F)
SST — Saturated Suction Temperature
TC — Total Capacity (1000 Btuh) gross

38AUZ07/40RUA07 COMBINATION RATINGS — 60 Hz

				Ambient Temperature (F)														
				85			95			105			115			125		
				EA (db)			EA (db)			EA (db)			EA (db)			EA (db)		
				75	80	85	75	80	85	75	80	85	75	80	85	75	80	85
1800 Cfm	EA (wb)	58	THC	65.8	65.8	74.1	63.4	63.4	71.4	60.7	60.7	68.3	58.3	58.3	65.7	54.7	54.7	61.6
			SHC	57.4	65.8	74.1	55.3	63.4	71.4	53.0	60.7	68.3	50.9	58.3	65.7	47.8	54.7	61.6
		62	THC	68.1	68.1	70.7	65.2	65.2	69.2	62.0	62.0	67.6	58.1	58.1	65.7	54.6	54.6	55.4
			SHC	51.9	61.3	70.7	50.4	59.8	69.2	48.9	58.3	67.6	47.1	56.4	65.7	36.3	45.9	55.4
		67	THC	74.0	74.0	74.0	70.9	70.9	70.9	67.3	67.3	67.3	63.4	63.4	63.4	56.7	56.7	56.7
			SHC	42.3	51.8	61.3	41.0	50.5	59.9	39.5	49.0	58.4	37.9	47.3	56.8	35.3	44.9	54.4
		72	THC	80.7	80.7	80.7	77.3	77.3	77.3	73.6	73.6	73.6	69.4	69.4	69.4	63.2	63.2	63.2
			SHC	32.7	42.2	51.8	31.4	40.9	50.4	30.0	39.5	49.0	28.4	37.9	47.4	26.2	35.7	45.3
		76	THC	—	86.2	86.2	—	82.6	82.6	—	78.6	78.6	—	74.3	74.3	—	70.7	70.7
			SHC	—	34.5	44.3	—	33.2	43.0	—	31.8	41.6	—	30.3	40.0	—	29.0	38.7
2100 Cfm	EA (wb)	58	THC	69.0	69.0	77.8	66.5	66.5	74.9	63.7	63.7	71.8	61.2	61.2	69.0	48.5	52.3	55.2
			SHC	60.3	69.0	77.8	58.0	66.5	74.9	55.6	63.7	71.8	53.5	61.2	69.0	46.0	52.3	55.2
		62	THC	70.2	70.2	77.1	67.2	67.2	75.5	64.0	64.0	73.6	60.4	60.4	70.7	48.5	52.9	56.3
			SHC	55.7	66.4	77.1	54.2	64.8	75.5	52.5	63.0	73.6	50.2	60.4	70.7	43.3	51.3	56.3
		67	THC	75.9	75.9	75.9	72.6	72.6	72.6	68.9	68.9	68.9	64.8	64.8	64.8	59.1	59.1	59.9
			SHC	44.8	55.7	66.5	43.4	54.3	65.1	41.9	52.8	63.6	40.3	51.1	62.0	38.1	49.0	59.9
		72	THC	82.5	82.5	82.5	79.0	79.0	79.0	75.2	75.2	75.2	70.9	70.9	70.9	63.9	63.9	63.9
			SHC	33.7	44.6	55.5	32.4	43.3	54.2	31.0	41.8	52.7	29.4	40.3	51.1	26.9	37.9	48.8
		76	THC	—	88.1	88.1	—	84.3	84.3	—	80.2	80.2	—	75.5	75.5	—	71.8	71.8
			SHC	—	35.8	47.0	—	34.5	45.6	—	33.0	44.2	—	31.4	42.5	—	30.2	41.2
2400 Cfm	EA (wb)	58	THC	71.7	71.7	80.8	69.0	69.0	77.8	66.1	66.1	74.5	62.6	62.6	70.6	58.9	58.9	66.3
			SHC	62.6	71.7	80.8	60.3	69.0	77.8	57.7	66.1	74.5	54.7	62.6	70.6	51.4	58.9	66.3
		62	THC	72.0	72.0	82.7	69.1	69.1	80.8	66.2	66.2	77.4	63.0	63.0	73.6	51.9	54.3	58.5
			SHC	59.0	70.9	82.7	57.4	69.1	80.8	55.0	66.2	77.4	52.3	63.0	73.6	46.4	54.3	58.5
		67	THC	77.3	77.3	77.3	74.0	74.0	74.0	70.2	70.2	70.2	66.1	66.1	66.9	62.5	62.5	65.0
			SHC	47.1	59.3	71.5	45.7	57.9	70.1	44.2	56.4	68.6	42.6	54.7	66.9	41.0	53.0	65.0
		72	THC	84.0	84.0	84.0	80.4	80.4	80.4	76.4	76.4	76.4	71.8	71.8	71.8	67.5	67.5	67.5
			SHC	34.6	46.9	59.1	33.3	45.5	57.8	31.9	44.1	56.3	30.2	42.4	54.6	28.7	40.8	52.9
		76	THC	—	89.5	89.5	—	85.7	85.7	—	81.4	81.4	—	76.7	76.7	—	—	—
			SHC	—	36.9	49.4	—	35.6	48.1	—	34.2	46.6	—	32.6	45.0	—	—	—
2700 Cfm	EA (wb)	58	THC	73.9	73.9	83.3	71.2	71.2	80.2	68.1	68.1	76.7	64.8	64.8	73.0	58.6	58.6	66.0
			SHC	64.6	73.9	83.3	62.2	71.2	80.2	59.5	68.1	76.7	56.5	64.8	73.0	51.2	58.6	66.0
		62	THC	74.0	74.0	86.5	71.3	71.3	83.3	68.2	68.2	79.7	64.8	64.8	75.8	52.5	55.9	60.2
			SHC	61.5	74.0	86.5	59.2	71.3	83.3	56.6	68.2	79.7	53.8	64.8	75.8	48.7	55.9	60.2
		67	THC	78.5	78.5	78.5	75.1	75.1	75.1	71.2	71.2	73.2	67.0	67.0	71.5	63.2	63.2	69.4
			SHC	49.3	62.7	76.2	47.9	61.3	74.8	46.4	59.8	73.2	44.7	58.1	71.5	43.0	56.2	69.4
		72	THC	85.1	85.1	85.1	81.4	81.4	81.4	77.3	77.3	77.3	72.6	72.6	72.6	65.3	65.3	65.3
			SHC	35.5	49.0	62.5	34.2	47.6	61.1	32.7	46.1	59.6	31.1	44.5	57.9	28.6	42.2	55.7
		76	THC	—	90.7	90.7	—	86.7	86.7	—	82.3	82.3	—	—	—	—	—	—
			SHC	—	38.1	51.8	—	36.7	50.4	—	35.3	48.9	—	—	—	—	—	—
3000 Cfm	EA (wb)	58	THC	75.9	75.9	85.5	73.0	73.0	82.3	69.8	69.8	78.7	66.3	66.3	74.7	62.4	62.4	70.4
			SHC	66.3	75.9	85.5	63.8	73.0	82.3	61.0	69.8	78.7	57.9	66.3	74.7	54.5	62.4	70.4
		62	THC	75.9	75.9	88.8	73.1	73.1	85.4	69.9	69.9	81.7	66.4	66.4	77.6	60.2	60.2	70.4
			SHC	63.1	75.9	88.8	60.7	73.1	85.4	58.0	69.9	81.7	55.1	66.4	77.6	50.0	60.2	70.4
		67	THC	79.5	79.5	80.7	76.0	76.0	79.3	72.1	72.1	77.6	67.9	67.9	75.7	63.7	63.7	73.5
			SHC	51.4	66.0	80.7	49.9	64.6	79.3	48.4	63.0	77.6	46.7	61.2	75.7	44.8	59.2	73.5
		72	THC	86.1	86.1	86.1	82.3	82.3	82.3	78.0	78.0	78.0	73.3	73.3	73.3	69.6	69.6	69.6
			SHC	36.3	51.0	65.8	35.0	49.7	64.4	33.5	48.1	62.8	31.9	46.5	61.1	30.5	44.9	59.3
		76	THC	—	91.6	91.6	—	87.6	87.6	—	—	—	—	—	—	—	—	—
			SHC	—	39.1	54.0	—	37.8	52.7	—	—	—	—	—	—	—	—	—

LEGEND

db — dry bulb
EA — Entering Air (F)
SHC — Sensible Heat Capacity (1000 Btuh) gross
THC — Total Capacity (1000 Btuh) gross
wb — wet bulb

38AUZ07/40RUA08 COMBINATION RATINGS — 60 Hz

				Ambient Temperature (F)														
				85			95			105			115			125		
				EA (db)			EA (db)			EA (db)			EA (db)			EA (db)		
				75	80	85	75	80	85	75	80	85	75	80	85	75	80	85
2250 Cfm	EA (wb)	58	THC	71.6	71.6	80.7	69.1	69.1	77.9	66.2	66.2	74.6	63.2	63.2	72.2	—	—	—
			SHC	62.5	71.6	80.7	60.3	69.1	77.9	57.8	66.2	74.6	55.0	63.2	72.2	—	—	—
		62	THC	72.5	72.5	81.5	69.6	69.6	79.6	66.6	66.6	76.6	63.2	63.2	73.2	—	—	—
			SHC	58.5	70.0	81.5	56.9	68.2	79.6	54.6	65.6	76.6	52.1	62.7	73.2	—	—	—
		67	THC	78.1	78.1	78.1	74.8	74.8	74.8	71.2	71.2	71.2	67.0	67.0	67.7	60.9	60.9	64.5
			SHC	46.9	58.7	70.5	45.6	57.4	69.1	44.1	55.9	67.6	42.4	54.2	66.0	40.1	52.0	63.8
		72	THC	84.9	84.9	84.9	81.4	81.4	81.4	77.4	77.4	77.4	73.1	73.1	73.1	68.9	68.9	68.9
			SHC	34.9	46.7	58.6	33.6	45.4	57.3	32.1	43.9	55.8	30.5	42.3	54.1	29.0	40.7	52.5
		76	THC	—	90.6	90.6	—	86.9	86.9	—	82.5	82.5	—	77.1	77.1	—	—	—
			SHC	—	37.1	49.1	—	35.9	47.9	—	33.5	43.4	—	31.9	41.8	—	—	—
2600 Cfm	EA (wb)	58	THC	74.8	74.8	84.2	72.1	72.1	81.3	69.0	69.0	77.8	65.7	65.7	74.0	62.2	62.2	70.0
			SHC	65.3	74.8	84.2	62.9	72.1	81.3	60.3	69.0	77.8	57.3	65.7	74.0	54.3	62.2	70.0
		62	THC	74.9	74.9	87.2	72.1	72.1	84.3	69.1	69.1	80.8	65.7	65.7	76.8	61.7	61.7	72.1
			SHC	62.0	74.6	87.2	60.0	72.1	84.3	57.4	69.1	80.8	54.6	65.7	76.8	51.2	61.7	72.1
		67	THC	79.8	79.8	79.8	76.3	76.3	76.4	72.6	72.6	74.2	68.4	68.4	71.9	63.9	63.9	69.8
			SHC	49.7	63.1	76.5	48.3	61.8	75.1	46.8	60.2	73.6	45.1	58.5	71.9	43.3	56.5	69.8
		72	THC	86.5	86.5	86.5	82.9	82.9	82.9	78.8	78.8	78.8	74.3	74.3	74.3	69.5	69.5	69.5
			SHC	36.0	49.4	62.9	34.7	48.1	61.6	33.2	46.6	60.1	31.6	45.0	58.4	29.9	43.3	56.7
		76	THC	—	92.3	92.3	—	87.7	87.7	—	—	—	—	—	—	—	—	—
			SHC	—	38.5	52.2	—	36.5	49.2	—	—	—	—	—	—	—	—	—
3000 Cfm	EA (wb)	58	THC	77.6	77.6	87.4	74.8	74.8	84.2	71.5	71.5	80.6	67.9	67.9	76.5	64.9	64.9	73.1
			SHC	67.7	77.6	87.4	65.3	74.8	84.2	62.5	71.5	80.6	59.3	67.9	76.5	56.7	64.9	73.1
		62	THC	77.7	77.7	90.8	74.8	74.8	87.5	71.6	71.6	83.7	67.9	67.9	79.4	64.9	64.9	75.9
			SHC	64.5	77.7	90.8	62.1	74.8	87.5	59.5	71.6	83.7	56.4	67.9	79.4	53.9	64.9	75.9
		67	THC	81.2	81.2	83.0	77.7	77.7	81.6	73.9	73.9	80.0	69.6	69.6	78.0	65.3	65.3	74.4
			SHC	52.7	67.8	83.0	51.3	66.4	81.6	49.8	64.9	80.0	48.0	63.0	78.0	44.5	59.4	74.4
		72	THC	87.9	87.9	87.9	84.2	84.2	84.2	80.0	80.0	80.0	75.3	75.3	75.3	70.2	70.2	70.2
			SHC	37.1	52.3	67.6	35.8	51.0	66.2	34.3	49.5	64.7	32.7	47.9	63.0	31.0	46.1	61.2
		76	THC	—	—	—	—	—	—	—	—	—	—	—	—	—	—	—
			SHC	—	—	—	—	—	—	—	—	—	—	—	—	—	—	—
3400 Cfm	EA (wb)	58	THC	79.7	79.7	89.8	76.8	76.8	86.4	73.4	73.4	82.7	69.6	69.6	78.4	64.8	64.8	73.0
			SHC	69.6	79.7	89.8	67.0	76.8	86.4	64.1	73.4	82.7	60.8	69.6	78.4	56.6	64.8	73.0
		62	THC	79.8	79.8	93.3	76.8	76.8	89.8	73.5	73.5	85.9	69.7	69.7	81.4	65.6	65.6	76.8
			SHC	66.3	79.8	93.3	63.8	76.8	89.8	61.0	73.5	85.9	57.8	69.7	81.4	54.5	65.6	76.8
		67	THC	82.3	82.3	88.8	78.8	78.8	87.3	74.9	74.9	85.5	70.6	70.6	83.2	—	—	—
			SHC	55.4	72.1	88.8	53.9	70.6	87.3	52.4	68.9	85.5	50.5	66.8	83.2	—	—	—
		72	THC	88.9	88.9	88.9	85.1	85.1	85.1	80.8	80.8	80.8	76.1	76.1	76.1	—	—	—
			SHC	38.2	55.0	71.9	36.9	53.7	70.5	35.4	52.2	69.0	33.8	50.5	67.3	—	—	—
		76	THC	—	—	—	—	—	—	—	—	—	—	—	—	—	—	—
			SHC	—	—	—	—	—	—	—	—	—	—	—	—	—	—	—
3750 Cfm	EA (wb)	58	THC	81.5	81.5	91.9	78.5	78.5	88.4	75.0	75.0	84.5	71.1	71.1	80.1	64.7	64.7	72.9
			SHC	71.2	81.5	91.9	68.5	78.5	88.4	65.5	75.0	84.5	62.1	71.1	80.1	56.5	64.7	72.9
		62	THC	81.6	81.6	95.4	78.5	78.5	91.8	75.1	75.1	87.8	71.2	71.2	83.2	66.3	66.3	77.5
			SHC	67.8	81.6	95.4	65.2	78.5	91.8	62.4	75.1	87.8	59.1	71.2	83.2	55.1	66.3	77.5
		67	THC	83.2	83.2	93.9	79.7	79.7	92.2	75.8	75.8	90.3	71.5	71.5	87.7	—	—	—
			SHC	57.7	75.8	93.9	56.2	74.2	92.2	54.6	72.4	90.3	52.6	70.2	87.7	—	—	—
		72	THC	89.7	89.7	89.7	85.8	85.8	85.8	81.5	81.5	81.5	76.8	76.8	76.8	—	—	—
			SHC	39.1	57.4	75.7	37.8	56.0	74.3	36.3	54.5	72.7	34.7	52.8	71.0	—	—	—
		76	THC	—	—	—	—	—	—	—	—	—	—	—	—	—	—	—
			SHC	—	—	—	—	—	—	—	—	—	—	—	—	—	—	—

LEGEND

db — dry bulb
EA — Entering Air (F)
SHC — Sensible Heat Capacity (1000 Btuh) gross
THC — Total Capacity (1000 Btuh) gross
wb — wet bulb

38AUZ08/40RUA08 COMBINATION RATINGS — 60 Hz

				Ambient Temperature (F)														
				85			95			105			115			125		
				EA (db)			EA (db)			EA (db)			EA (db)			EA (db)		
				75	80	85	75	80	85	75	80	85	75	80	85	75	80	85
2250 Cfm	EA (wb)	58	THC	84.6	84.6	95.4	81.7	81.7	92.1	78.5	78.5	88.5	75.5	75.5	85.1	70.7	70.7	79.7
			SHC	73.9	84.6	95.4	71.3	81.7	92.1	68.5	78.5	88.5	65.9	75.5	85.1	61.7	70.7	79.7
		62	THC	88.2	88.2	89.4	84.6	84.6	87.6	80.7	80.7	85.6	76.9	76.9	83.6	73.2	73.2	81.3
			SHC	66.1	77.7	89.4	64.3	75.9	87.6	62.4	74.0	85.6	60.5	72.0	83.6	58.5	69.9	81.3
		67	THC	95.5	95.5	95.5	91.5	91.5	91.5	87.3	87.3	87.3	82.7	82.7	82.7	76.1	76.1	76.1
			SHC	54.1	65.8	77.5	52.3	64.1	75.8	50.5	62.2	74.0	48.6	60.3	72.0	46.0	57.8	69.5
		72	THC	103.4	103.4	103.4	99.2	99.2	99.2	94.6	94.6	94.6	89.6	89.6	89.6	82.3	82.3	82.3
			SHC	41.8	53.7	65.5	40.2	52.0	63.8	38.4	50.2	62.0	36.6	48.3	60.1	33.8	45.6	57.4
		76	THC	—	109.9	109.9	—	105.4	105.4	—	100.6	100.6	—	95.3	95.3	—	87.8	87.8
			SHC	—	43.9	56.2	—	42.3	54.7	—	40.6	52.8	—	38.7	50.9	—	36.1	48.3
2625 Cfm	EA (wb)	58	THC	88.7	88.7	99.9	85.6	85.6	96.4	82.1	82.1	92.5	78.7	78.7	88.7	75.4	75.4	85.0
			SHC	77.4	88.7	99.9	74.7	85.6	96.4	71.7	82.1	92.5	68.8	78.7	88.7	65.8	75.4	85.0
		62	THC	90.7	90.7	97.2	87.0	87.0	95.3	83.0	83.0	93.1	78.9	78.9	90.6	75.3	75.3	86.4
			SHC	70.7	84.0	97.2	68.8	82.1	95.3	66.9	80.0	93.1	64.7	77.6	90.6	61.7	74.0	86.4
		67	THC	97.8	97.8	97.8	93.7	93.7	93.7	89.2	89.2	89.2	84.4	84.4	84.4	76.7	76.7	76.7
			SHC	57.0	70.4	83.8	55.3	68.7	82.1	53.4	66.8	80.2	51.5	64.8	78.2	48.6	62.0	75.5
		72	THC	105.7	105.7	105.7	101.3	101.3	101.3	96.5	96.5	96.5	91.5	91.5	91.5	86.2	86.2	86.2
			SHC	43.0	56.5	70.0	41.4	54.9	68.3	39.6	53.0	66.5	37.8	51.2	64.5	35.8	49.2	62.5
		76	THC	—	112.2	112.2	—	107.6	107.6	—	102.5	102.5	—	97.0	97.0	—	—	—
			SHC	—	45.4	59.5	—	43.8	57.8	—	42.0	55.9	—	40.2	54.0	—	—	—
3000 Cfm	EA (wb)	58	THC	92.0	92.0	103.7	88.7	88.7	99.9	85.1	85.1	95.9	81.2	81.2	91.5	76.0	76.0	85.7
			SHC	80.3	92.0	103.7	77.4	88.7	99.9	74.3	85.1	95.9	70.9	81.2	91.5	66.4	76.0	85.7
		62	THC	92.9	92.9	104.3	89.2	89.2	102.0	85.1	85.1	99.5	81.4	81.4	95.1	76.6	77.5	81.1
			SHC	74.9	89.6	104.3	72.9	87.4	102.0	70.7	85.1	99.5	67.6	81.4	95.1	66.6	77.5	81.1
		67	THC	99.6	99.6	99.6	95.3	95.3	95.3	90.8	90.8	90.8	86.0	86.0	86.0	79.1	79.1	81.7
			SHC	59.7	74.7	89.8	58.0	73.0	88.0	56.1	71.1	86.1	54.2	69.1	84.1	51.7	66.7	81.7
		72	THC	107.5	107.5	107.5	103.0	103.0	103.0	98.0	98.0	98.0	92.9	92.9	92.9	88.0	88.0	88.0
			SHC	44.1	59.2	74.3	42.5	57.5	72.6	40.7	55.7	70.7	38.8	53.8	68.7	37.0	51.8	66.7
		76	THC	—	114.0	114.0	—	109.1	109.1	—	103.9	103.9	—	98.3	98.3	—	—	—
			SHC	—	46.9	62.4	—	45.2	60.7	—	43.4	58.8	—	41.5	56.8	—	—	—
3375 Cfm	EA (wb)	58	THC	94.8	94.8	106.8	91.3	91.3	102.9	87.5	87.5	98.6	83.4	83.4	94.0	77.9	77.9	87.8
			SHC	82.8	94.8	106.8	79.7	91.3	102.9	76.4	87.5	98.6	72.9	83.4	94.0	68.0	77.9	87.8
		62	THC	94.8	94.8	110.9	91.4	91.4	106.8	87.6	87.6	102.4	83.5	83.5	97.6	79.3	79.3	92.7
			SHC	78.8	94.8	110.9	75.9	91.4	106.8	72.8	87.6	102.4	69.3	83.5	97.6	65.9	79.3	92.7
		67	THC	101.0	101.0	101.0	96.6	96.6	96.6	92.0	92.0	92.0	87.0	87.0	89.6	82.8	82.8	87.3
			SHC	62.3	78.9	95.4	60.6	77.1	93.7	58.7	75.2	91.7	56.7	73.2	89.6	54.8	71.0	87.3
		72	THC	108.9	108.9	108.9	104.3	104.3	104.3	99.2	99.2	99.2	93.8	93.8	93.8	86.1	86.1	86.1
			SHC	45.2	61.7	78.3	43.5	60.0	76.6	41.7	58.2	74.7	39.7	56.2	72.6	37.1	53.6	70.0
		76	THC	—	115.4	115.4	—	110.4	110.4	—	105.1	105.1	—	99.3	99.3	—	92.2	92.2
			SHC	—	48.2	65.2	—	46.5	63.4	—	44.7	61.6	—	42.7	59.5	—	40.4	57.1
3750 Cfm	EA (wb)	58	THC	97.1	97.1	109.5	93.5	93.5	105.4	89.6	89.6	101.0	85.3	85.3	96.1	76.9	80.7	84.7
			SHC	84.8	97.1	109.5	81.7	93.5	105.4	78.2	89.6	101.0	74.5	85.3	96.1	70.9	80.7	84.7
		62	THC	97.2	97.2	113.7	93.6	93.6	109.5	89.7	89.7	104.8	85.5	85.5	100.0	78.2	78.2	91.4
			SHC	80.8	97.2	113.7	77.8	93.6	109.5	74.5	89.7	104.8	71.1	85.5	100.0	64.9	78.2	91.4
		67	THC	102.2	102.2	102.2	97.7	97.7	99.0	93.1	93.1	97.0	88.1	88.1	94.8	84.0	83.8	85.6
			SHC	64.8	82.8	100.8	63.0	81.0	99.0	61.1	79.1	97.0	59.1	77.0	94.8	79.8	73.1	81.4
		72	THC	110.1	110.1	110.1	105.3	105.3	105.3	100.2	100.2	100.2	94.7	94.7	94.7	90.0	90.0	90.0
			SHC	46.1	64.2	82.2	44.4	62.4	80.4	42.6	60.5	78.4	40.7	58.5	76.4	38.9	56.6	74.2
		76	THC	—	116.5	116.5	—	111.5	111.5	—	106.0	106.0	—	100.1	100.1	—	90.8	90.8
			SHC	—	49.4	67.8	—	47.7	66.0	—	45.9	64.1	—	43.9	62.0	—	40.8	58.8

LEGEND

db — dry bulb
EA — Entering Air (F)
SHC — Sensible Heat Capacity (1000 Btuh) gross
THC — Total Capacity (1000 Btuh) gross
wb — wet bulb

38AUZ08/40RUA12 COMBINATION RATINGS — 60 Hz

				Ambient Temperature (F)														
				85			95			105			115			125		
				EA (db)			EA (db)			EA (db)			EA (db)			EA (db)		
				75	80	85	75	80	85	75	80	85	75	80	85	75	80	85
3000 Cfm	EA (wb)	58	THC	93.7	93.7	105.5	90.3	90.3	101.8	86.7	86.7	97.7	82.7	82.7	93.2	—	—	—
			SHC	81.8	93.7	105.5	78.9	90.3	101.8	75.7	86.7	97.7	72.2	82.7	93.2	—	—	—
		62	THC	94.5	94.5	106.5	90.8	90.8	104.2	86.8	86.8	101.5	83.0	83.0	97.0	78.0	78.0	91.2
			SHC	76.4	91.4	106.5	74.4	89.3	104.2	72.1	86.8	101.5	68.9	83.0	97.0	64.8	78.0	91.2
		67	THC	101.3	101.3	101.3	97.0	97.0	97.0	92.4	92.4	92.4	87.7	87.7	87.7	80.4	80.4	83.5
			SHC	60.9	76.3	91.7	59.2	74.5	89.9	57.3	72.7	88.0	55.4	70.7	86.0	52.7	68.1	83.5
		72	THC	109.4	109.4	109.4	104.9	104.9	104.9	100.0	100.0	100.0	94.7	94.7	94.7	87.1	87.1	87.1
			SHC	44.9	60.4	75.8	43.3	58.7	74.1	41.5	56.9	72.2	39.6	54.9	70.2	36.9	52.2	67.6
		76	THC	—	116.1	116.1	—	111.3	111.3	—	106.1	106.1	—	100.4	100.4	—	—	—
			SHC	—	47.7	63.5	—	46.0	61.8	—	44.3	60.0	—	42.3	57.9	—	—	—
3500 Cfm	EA (wb)	58	THC	97.4	97.4	109.7	93.9	93.9	105.8	90.0	90.0	101.4	85.9	85.9	96.8	79.7	79.7	89.8
			SHC	85.0	97.4	109.7	82.0	93.9	105.8	78.6	90.0	101.4	75.0	85.9	96.8	69.6	79.7	89.8
		62	THC	97.5	97.5	114.0	93.9	93.9	109.9	90.1	90.1	105.4	86.0	86.0	100.5	82.6	82.6	96.6
			SHC	81.0	97.5	114.0	78.0	93.9	109.9	74.8	90.1	105.4	71.4	86.0	100.5	68.6	82.6	96.6
		67	THC	103.2	103.2	103.2	98.8	98.8	98.8	94.2	94.2	95.8	89.1	89.1	93.7	82.7	82.7	91.4
			SHC	64.5	82.1	99.6	62.8	80.3	97.8	60.9	78.4	95.8	58.9	76.3	93.7	56.5	73.9	91.4
		72	THC	111.2	111.2	111.2	106.6	106.6	106.6	101.6	101.6	101.6	96.2	96.2	96.2	88.8	88.8	88.8
			SHC	46.3	63.9	81.4	44.7	62.2	79.7	42.9	60.3	77.8	40.9	58.3	75.8	38.4	55.8	73.2
		76	THC	—	117.9	117.9	—	113.0	113.0	—	107.6	107.6	—	101.8	101.8	—	—	—
			SHC	—	49.5	67.4	—	47.8	65.6	—	46.0	63.7	—	44.0	61.6	—	—	—
4000 Cfm	EA (wb)	58	THC	100.4	100.4	113.1	96.7	96.7	109.0	92.7	92.7	104.5	88.4	88.4	99.6	82.0	82.0	92.4
			SHC	87.7	100.4	113.1	84.4	96.7	109.0	80.9	92.7	104.5	77.2	88.4	99.6	71.6	82.0	92.4
		62	THC	100.4	100.4	117.4	96.8	96.8	113.2	92.8	92.8	108.5	88.4	88.4	103.4	81.7	81.7	95.5
			SHC	83.4	100.4	117.4	80.4	96.8	113.2	77.1	92.8	108.5	73.5	88.4	103.4	67.8	81.7	95.5
		67	THC	104.7	104.7	107.0	100.3	100.3	105.1	95.5	95.5	103.1	90.4	90.4	100.8	82.8	82.8	94.5
			SHC	67.9	87.5	107.0	66.1	85.6	105.1	64.2	83.6	103.1	62.2	81.5	100.8	54.7	74.6	94.5
		72	THC	112.7	112.7	112.7	108.0	108.0	108.0	102.8	102.8	102.8	97.3	97.3	97.3	89.9	89.9	89.9
			SHC	47.7	67.2	86.7	46.0	65.5	84.9	44.1	63.6	83.0	42.2	61.6	80.9	39.7	59.0	78.4
		76	THC	—	119.4	119.4	—	114.3	114.3	—	108.7	108.7	—	103.0	103.0	—	94.3	94.3
			SHC	—	51.2	71.0	—	49.5	69.2	—	47.6	67.2	—	45.6	65.1	—	42.8	62.0
4500 Cfm	EA (wb)	58	THC	102.7	102.7	115.7	98.9	98.9	111.5	94.8	94.8	106.8	90.3	90.3	101.7	85.1	85.1	95.9
			SHC	89.7	102.7	115.7	86.3	98.9	111.5	82.7	94.8	106.8	78.9	90.3	101.7	74.3	85.1	95.9
		62	THC	102.8	102.8	120.2	99.0	99.0	115.7	94.8	94.8	110.9	90.3	90.3	105.6	83.6	83.6	97.8
			SHC	85.4	102.8	120.2	82.2	99.0	115.7	78.8	94.8	110.9	75.1	90.3	105.6	69.5	83.6	97.8
		67	THC	105.9	105.9	113.8	101.5	101.5	111.7	96.7	96.7	109.5	91.6	91.6	106.8	84.0	84.0	100.0
			SHC	71.0	92.4	113.8	69.2	90.5	111.7	67.2	88.3	109.5	65.0	85.9	106.8	57.0	76.0	100.0
		72	THC	113.8	113.8	113.8	109.0	109.0	109.0	103.7	103.7	103.7	98.1	98.1	98.1	89.5	89.5	89.5
			SHC	48.9	70.3	91.7	47.2	68.6	89.9	45.3	66.6	87.9	43.4	64.6	85.7	40.6	61.8	83.1
		76	THC	—	120.4	120.4	—	115.3	115.3	—	109.6	109.6	—	103.9	103.9	—	—	—
			SHC	—	52.7	74.3	—	51.0	72.4	—	49.1	70.3	—	47.1	68.1	—	—	—
5000 Cfm	EA (wb)	58	THC	105.0	105.0	118.3	101.0	101.0	113.9	96.8	96.8	109.0	92.1	92.1	103.8	88.1	88.1	99.3
			SHC	91.7	105.0	118.3	88.2	101.0	113.9	84.5	96.8	109.0	80.5	92.1	103.8	76.9	88.1	99.3
		62	THC	105.1	105.1	122.9	101.1	101.1	118.2	96.8	96.8	113.2	92.2	92.2	107.8	85.5	85.5	100.0
			SHC	87.3	105.1	122.9	84.0	101.1	118.2	80.4	96.8	113.2	76.6	92.2	107.8	71.1	85.5	100.0
		67	THC	107.1	107.1	120.5	102.6	102.6	118.3	97.8	97.8	115.8	92.7	92.7	112.8	—	—	—
			SHC	74.1	97.3	120.5	72.2	95.3	118.3	70.1	93.0	115.8	67.8	90.3	112.8	—	—	—
		72	THC	114.9	114.9	114.9	109.9	109.9	109.9	104.6	104.6	104.6	98.9	98.9	98.9	—	—	—
			SHC	50.1	73.4	96.7	48.4	71.6	94.8	46.5	69.6	92.7	44.6	67.5	90.5	—	—	—
		76	THC	—	121.4	121.4	—	116.2	116.2	—	110.4	110.4	—	104.7	104.7	—	—	—
			SHC	—	54.2	77.5	—	52.4	75.6	—	50.5	73.4	—	48.5	71.1	—	—	—

LEGEND

db — dry bulb
EA — Entering Air (F)
SHC — Sensible Heat Capacity (1000 Btuh) gross
THC — Total Capacity (1000 Btuh) gross
wb — wet bulb

38AUZ12/40RUA12 COMBINATION RATINGS — 60 Hz

				Ambient Temperature (F)														
				85			95			105			115			125		
				EA (db)			EA (db)			EA (db)			EA (db)			EA (db)		
				75	80	85	75	80	85	75	80	85	75	80	85	75	80	85
3000 Cfm	EA (wb)	58	THC	110.5	110.5	121.5	106.2	106.2	117.1	101.6	101.6	112.4	96.9	96.9	107.5	92.5	92.5	102.9
			SHC	99.4	110.5	121.5	95.3	106.2	117.1	90.9	101.6	112.4	86.3	96.9	107.5	82.0	92.5	102.9
		62	THC	114.0	114.0	114.0	108.8	108.8	111.4	103.3	103.3	108.7	97.6	97.6	105.6	91.2	91.2	101.6
			SHC	92.3	103.2	114.0	89.9	100.6	111.4	87.3	98.0	108.7	84.5	95.1	105.6	80.8	91.2	101.6
		67	THC	123.2	123.2	123.2	117.4	117.4	117.4	111.5	111.5	111.5	105.1	105.1	105.1	96.0	96.2	96.5
			SHC	76.4	86.8	97.2	74.1	84.4	94.7	71.7	81.9	92.1	69.1	79.3	89.4	56.7	71.5	86.9
		72	THC	133.0	133.0	133.0	126.8	126.8	126.8	120.4	120.4	120.4	113.5	113.5	113.5	106.0	106.0	106.0
			SHC	60.2	70.1	79.9	57.9	67.7	77.5	55.6	65.3	74.9	53.2	62.7	72.3	50.5	60.0	69.4
		76	THC	—	140.7	140.7	—	134.2	134.2	—	127.6	127.6	—	120.2	120.2	—	112.3	112.3
			SHC	—	56.4	65.8	—	54.1	63.4	—	51.8	61.0	—	49.3	58.4	—	46.6	55.6
3500 Cfm	EA (wb)	58	THC	115.8	115.8	128.4	111.2	111.2	123.6	106.3	106.3	118.6	101.1	101.1	113.2	94.3	94.3	106.2
			SHC	103.3	115.8	128.4	98.8	111.2	123.6	94.1	106.3	118.6	89.0	101.1	113.2	82.5	94.3	106.2
		62	THC	117.4	117.4	124.5	112.0	112.0	121.6	106.6	106.6	118.3	101.1	101.1	113.2	93.0	93.0	104.8
			SHC	99.5	112.0	124.5	96.9	109.2	121.6	93.8	106.0	118.3	89.0	101.1	113.2	81.2	93.0	104.8
		67	THC	126.1	126.1	126.1	120.0	120.0	120.0	113.8	113.8	113.8	107.2	107.2	107.2	101.0	101.0	101.0
			SHC	81.5	93.4	105.4	79.1	91.0	102.8	76.7	88.4	100.2	74.1	85.8	97.4	71.6	83.2	94.7
		72	THC	135.6	135.6	135.6	129.2	129.2	129.2	122.6	122.6	122.6	115.5	115.5	115.5	108.0	108.0	108.0
			SHC	62.8	74.1	85.4	60.5	71.7	82.9	58.2	69.3	80.4	55.7	66.7	77.7	53.2	64.0	74.9
		76	THC	—	143.2	143.2	—	136.5	136.5	—	129.7	129.7	—	122.1	122.1	—	—	—
			SHC	—	58.4	69.2	—	56.1	66.8	—	53.8	64.4	—	51.3	61.8	—	—	—
4000 Cfm	EA (wb)	58	THC	120.2	120.2	134.3	115.3	115.3	129.2	110.1	110.1	123.8	104.5	104.5	118.0	97.1	97.1	110.4
			SHC	106.1	120.2	134.3	101.4	115.3	129.2	96.4	110.1	123.8	91.0	104.5	118.0	83.9	97.1	110.4
		62	THC	120.5	120.5	133.7	115.3	115.3	129.2	110.2	110.2	123.9	104.6	104.6	118.1	97.0	97.0	110.3
			SHC	105.6	119.7	133.7	101.4	115.3	129.2	96.5	110.2	123.9	91.1	104.6	118.1	83.8	97.0	110.3
		67	THC	128.2	128.2	128.2	122.0	122.0	122.0	115.6	115.6	115.6	108.8	108.8	108.8	101.3	101.3	102.0
			SHC	86.2	99.7	113.2	83.9	97.2	110.6	81.4	94.7	108.0	78.8	92.0	105.1	76.0	89.0	102.0
		72	THC	137.6	137.6	137.6	131.0	131.0	131.0	124.2	124.2	124.2	116.9	116.9	116.9	109.3	109.3	109.3
			SHC	65.2	78.0	90.7	62.9	75.6	88.2	60.6	73.1	85.7	58.1	70.6	83.0	55.6	67.8	80.1
		76	THC	—	145.0	145.0	—	138.2	138.2	—	131.2	131.2	—	—	—	—	—	—
			SHC	—	60.3	72.5	—	58.1	70.1	—	55.8	67.7	—	—	—	—	—	—
4500 Cfm	EA (wb)	58	THC	123.8	123.8	139.3	118.6	118.6	134.0	113.2	113.2	128.4	107.3	107.3	122.2	102.3	102.3	117.1
			SHC	108.2	123.8	139.3	103.2	118.6	134.0	98.0	113.2	128.4	92.4	107.3	122.2	87.6	102.3	117.1
		62	THC	123.9	123.9	139.4	118.7	118.7	134.1	113.3	113.3	128.4	107.4	107.4	122.3	101.8	101.8	116.5
			SHC	108.3	123.9	139.4	103.3	118.7	134.1	98.1	113.3	128.4	92.5	107.4	122.3	87.1	101.8	116.5
		67	THC	130.0	130.0	130.0	123.6	123.6	123.6	117.1	117.1	117.1	110.2	110.2	112.5	102.8	102.8	109.3
			SHC	90.8	105.8	120.9	88.3	103.2	118.2	85.8	100.6	115.4	83.2	97.8	112.5	80.3	94.8	109.3
		72	THC	139.1	139.1	139.1	132.4	132.4	132.4	125.5	125.5	125.5	118.1	118.1	118.1	110.3	110.3	110.3
			SHC	67.4	81.7	95.9	65.2	79.3	93.3	62.9	76.8	90.8	60.4	74.2	88.1	57.8	71.5	85.2
		76	THC	—	146.4	146.4	—	139.6	139.6	—	—	—	—	—	—	—	—	—
			SHC	—	62.2	75.7	—	59.9	73.3	—	—	—	—	—	—	—	—	—
5000 Cfm	EA (wb)	58	THC	126.8	126.8	143.8	121.4	121.4	138.2	115.8	115.8	132.3	109.8	109.8	126.1	103.0	103.0	119.1
			SHC	109.8	126.8	143.8	104.5	121.4	138.2	99.2	115.8	132.3	93.4	109.8	126.1	86.9	103.0	119.1
		62	THC	126.9	126.9	143.9	121.4	121.4	138.2	115.9	115.9	132.4	109.8	109.8	126.2	103.1	103.1	119.2
			SHC	109.8	126.9	143.9	104.6	121.4	138.2	99.3	115.9	132.4	93.5	109.8	126.2	87.0	103.1	119.2
		67	THC	131.4	131.4	131.4	125.0	125.0	125.5	118.4	118.4	122.7	111.5	111.5	119.6	104.1	104.1	116.1
			SHC	95.1	111.7	128.2	92.6	109.1	125.5	90.1	106.4	122.7	87.3	103.4	119.6	84.2	100.1	116.1
		72	THC	140.3	140.3	140.3	133.5	133.5	133.5	126.6	126.6	126.6	119.0	119.0	119.0	111.1	111.1	111.1
			SHC	69.6	85.3	100.9	67.4	82.9	98.4	65.1	80.5	95.9	62.6	77.9	93.2	60.0	75.1	90.3
		76	THC	—	147.6	147.6	—	—	—	—	—	—	—	—	—	—	—	—
			SHC	—	64.0	78.8	—	—	—	—	—	—	—	—	—	—	—	—

LEGEND

db — dry bulb
EA — Entering Air (F)
SHC — Sensible Heat Capacity (1000 Btuh) gross
THC — Total Capacity (1000 Btuh) gross
wb — wet bulb

38AUZ12/40RUA14 COMBINATION RATINGS — 60 Hz

				Ambient Temperature (F)														
				85			95			105			115			125		
				EA (db)			EA (db)			EA (db)			EA (db)			EA (db)		
				75	80	85	75	80	85	75	80	85	75	80	85	75	80	85
3750 Cfm	EA (wb)	58	THC	119.7	119.7	132.9	115.2	115.2	128.3	110.5	110.5	123.4	105.3	105.3	118.0	97.9	97.9	110.4
			SHC	106.5	119.7	132.9	102.2	115.2	128.3	97.6	110.5	123.4	92.6	105.3	118.0	85.5	97.9	110.4
		62	THC	121.2	121.2	130.3	116.0	116.0	127.0	110.8	110.8	122.9	105.4	105.4	118.1	98.7	98.7	111.1
			SHC	104.0	117.2	130.3	101.0	114.0	127.0	97.2	110.1	122.9	92.7	105.4	118.1	86.2	98.7	111.1
		67	THC	130.0	130.0	130.0	124.4	124.4	124.4	118.5	118.5	118.5	112.0	112.0	112.0	104.9	104.9	104.9
			SHC	85.3	97.8	110.3	83.1	95.5	108.0	80.8	93.1	105.5	78.3	90.5	102.7	75.6	87.7	99.8
		72	THC	139.4	139.4	139.4	133.7	133.7	133.7	127.7	127.7	127.7	120.9	120.9	120.9	113.5	113.5	113.5
			SHC	65.3	77.1	88.8	63.3	75.0	86.7	61.2	72.8	84.4	58.9	70.4	81.8	56.3	67.7	79.0
		76	THC	—	—	—	—	—	—	—	—	—	—	—	—	—	—	—
			SHC	—	—	—	—	—	—	—	—	—	—	—	—	—	—	—
4300 Cfm	EA (wb)	58	THC	124.1	124.1	138.8	119.4	119.4	134.1	114.5	114.5	128.9	109.0	109.0	123.2	100.5	100.5	114.4
			SHC	109.2	124.1	138.8	104.8	119.4	134.1	100.0	114.5	128.9	94.8	109.0	123.2	86.6	100.5	114.4
		62	THC	124.5	124.5	138.3	119.5	119.5	134.1	114.5	114.5	128.9	109.1	109.1	123.3	101.0	101.0	114.9
			SHC	108.7	123.5	138.3	104.9	119.5	134.1	100.1	114.5	128.9	94.9	109.1	123.3	87.1	101.0	114.9
		67	THC	132.1	132.1	132.1	126.4	126.4	126.4	120.4	120.4	121.1	113.8	113.8	115.6	106.5	106.5	109.5
			SHC	90.7	104.9	119.0	88.5	102.5	116.6	86.1	100.1	114.1	83.6	97.4	111.2	80.7	94.5	108.1
		72	THC	141.3	141.3	141.3	135.5	135.5	135.5	129.5	129.5	129.5	122.6	122.6	122.6	114.3	114.3	114.3
			SHC	68.1	81.4	94.7	66.1	79.3	92.6	64.0	77.1	90.3	61.7	74.7	87.7	57.6	69.7	81.7
		76	THC	—	—	—	—	—	—	—	—	—	—	—	—	—	—	—
			SHC	—	—	—	—	—	—	—	—	—	—	—	—	—	—	—
5000 Cfm	EA (wb)	58	THC	128.9	128.9	145.7	124.1	124.1	140.7	118.9	118.9	135.3	113.2	113.2	129.3	106.8	106.8	122.7
			SHC	112.1	128.9	145.7	107.5	124.1	140.7	102.5	118.9	135.3	97.0	113.2	129.3	90.9	106.8	122.7
		62	THC	129.0	129.0	145.8	124.2	124.2	140.7	119.0	119.0	135.3	113.3	113.3	129.4	106.8	106.8	122.7
			SHC	112.2	129.0	145.8	107.6	124.2	140.7	102.6	119.0	135.3	97.1	113.3	129.4	91.0	106.8	122.7
		67	THC	134.4	134.4	134.4	128.6	128.6	128.6	122.5	122.5	124.7	115.8	115.8	121.8	108.4	108.4	118.5
			SHC	97.3	113.6	129.8	95.1	111.2	127.4	92.7	108.7	124.7	90.1	105.9	121.8	87.0	102.8	118.5
		72	THC	143.4	143.4	143.4	137.5	137.5	137.5	131.3	131.3	131.3	124.3	124.3	124.3	—	—	—
			SHC	71.6	86.8	102.0	69.6	84.7	99.9	67.5	82.6	97.6	65.2	80.1	95.0	—	—	—
		76	THC	—	—	—	—	—	—	—	—	—	—	—	—	—	—	—
			SHC	—	—	—	—	—	—	—	—	—	—	—	—	—	—	—
5700 Cfm	EA (wb)	58	THC	132.3	132.3	151.0	127.3	127.3	145.8	122.0	122.0	140.3	116.1	116.1	134.1	109.5	109.5	127.2
			SHC	113.6	132.3	151.0	108.8	127.3	145.8	103.7	122.0	140.3	98.1	116.1	134.1	91.8	109.5	127.2
		62	THC	132.4	132.4	151.1	127.4	127.4	145.9	122.1	122.1	140.3	116.2	116.2	134.2	109.5	109.5	127.3
			SHC	113.7	132.4	151.1	108.9	127.4	145.9	103.8	122.1	140.3	98.1	116.2	134.2	91.8	109.5	127.3
		67	THC	136.0	136.0	141.8	130.2	130.2	137.7	124.1	124.1	134.2	117.4	117.4	130.6	110.3	110.3	125.5
			SHC	103.2	121.5	139.8	100.8	119.0	137.2	98.1	116.1	134.2	94.9	112.7	130.6	90.2	107.8	125.5
		72	THC	144.7	144.7	144.7	138.8	138.8	138.8	132.0	132.0	140.6	126.0	126.0	133.0	—	—	—
			SHC	74.8	92.0	109.1	72.8	89.9	107.0	71.4	88.0	81.8	68.7	85.2	101.8	—	—	—
		76	THC	—	—	—	—	—	—	—	—	—	—	—	—	—	—	—
			SHC	—	—	—	—	—	—	—	—	—	—	—	—	—	—	—
6250 Cfm	EA (wb)	58	THC	134.9	134.9	155.1	129.8	129.8	149.8	124.4	124.4	144.2	118.3	118.3	137.8	111.6	111.6	130.8
			SHC	114.7	134.9	155.1	109.9	129.8	149.8	104.7	124.4	144.2	98.9	118.3	137.8	92.5	111.6	130.8
		62	THC	135.0	135.0	155.2	129.9	129.9	149.9	124.5	124.5	144.2	118.4	118.4	137.9	111.7	111.7	130.9
			SHC	114.8	135.0	155.2	109.9	129.9	149.9	104.7	124.5	144.2	98.9	118.4	137.9	92.5	111.7	130.9
		67	THC	137.2	137.2	147.6	131.4	131.4	144.9	125.3	125.3	141.6	118.7	118.7	137.5	111.8	111.8	131.0
			SHC	107.8	127.7	147.6	105.3	125.1	144.9	102.4	122.0	141.6	98.6	118.1	137.5	92.7	111.8	131.0
		72	THC	145.7	145.7	145.7	139.9	139.9	139.9	—	—	—	—	—	—	—	—	—
			SHC	77.3	96.0	114.7	75.4	94.0	112.6	—	—	—	—	—	—	—	—	—
		76	THC	—	—	—	—	—	—	—	—	—	—	—	—	—	—	—
			SHC	—	—	—	—	—	—	—	—	—	—	—	—	—	—	—

LEGEND

db — dry bulb
EA — Entering Air (F)
SHC — Sensible Heat Capacity (1000 Btuh) gross
THC — Total Capacity (1000 Btuh) gross
wb — wet bulb

38AUD12/40RUA12 COMBINATION RATINGS — 60 Hz

				Ambient Temperature (F)														
				85			95			105			115			125		
				EA (db)			EA (db)			EA (db)			EA (db)			EA (db)		
				75	80	85	75	80	85	75	80	85	75	80	85	75	80	85
3000 Cfm	EA (wb)	58	THC	111.6	111.6	125.3	107.3	107.3	120.5	102.6	102.6	115.2	97.3	97.3	109.4	91.7	91.7	103.0
			SHC	97.9	111.6	125.3	94.1	107.3	120.5	89.9	102.6	115.2	85.3	97.3	109.4	80.3	91.7	103.0
		62	THC	115.9	115.9	119.8	110.5	110.5	117.1	104.8	104.8	114.2	98.3	98.3	110.7	92.4	92.4	106.2
			SHC	88.6	104.2	119.8	86.0	101.5	117.1	83.2	98.7	114.2	79.9	95.3	110.7	76.2	91.2	106.2
		67	THC	125.6	125.6	125.6	119.9	119.9	119.9	113.7	113.7	113.7	107.1	107.1	107.1	99.6	99.6	99.6
			SHC	71.9	87.6	103.3	69.4	85.1	100.8	66.8	82.5	98.1	63.9	79.6	95.3	60.8	76.5	92.2
		72	THC	135.6	135.6	135.6	129.6	129.6	129.6	123.1	123.1	123.1	116.1	116.1	116.1	108.4	108.4	108.4
			SHC	55.0	70.8	86.6	52.6	68.4	84.2	50.1	65.9	81.7	47.4	63.2	79.0	44.5	60.3	76.1
		76	THC	—	143.6	143.6	—	137.4	137.4	—	130.7	130.7	—	123.3	123.3	—	115.2	115.2
			SHC	—	57.3	73.6	—	55.1	71.4	—	52.7	68.9	—	50.1	66.2	—	47.4	63.4
3500 Cfm	EA (wb)	58	THC	117.1	117.1	131.6	112.5	112.5	126.4	107.5	107.5	120.8	102.0	102.0	114.7	95.7	95.7	107.7
			SHC	102.6	117.1	131.6	98.6	112.5	126.4	94.2	107.5	120.8	89.4	102.0	114.7	83.8	95.7	107.7
		62	THC	119.3	119.3	130.8	113.8	113.8	127.8	108.1	108.1	123.7	102.1	102.1	119.1	95.7	95.7	111.7
			SHC	95.1	112.9	130.8	92.3	110.0	127.8	88.9	106.3	123.7	85.1	102.1	119.1	79.7	95.7	111.7
		67	THC	128.8	128.8	128.8	122.8	122.8	122.8	116.4	116.4	116.4	109.5	109.5	109.5	101.9	101.9	101.9
			SHC	76.0	94.1	112.2	73.5	91.6	109.7	70.8	88.9	107.0	68.0	86.1	104.2	64.9	82.9	101.0
		72	THC	138.6	138.6	138.6	132.5	132.5	132.5	125.8	125.8	125.8	118.4	118.4	118.4	110.5	110.5	110.5
			SHC	56.5	74.8	93.0	54.2	72.4	90.6	51.7	69.9	88.1	48.9	67.1	85.3	46.0	64.2	82.4
		76	THC	—	146.6	146.6	—	140.2	140.2	—	133.2	133.2	—	125.6	125.6	—	—	—
			SHC	—	59.4	78.0	—	57.1	75.7	—	54.7	73.3	—	52.2	70.6	—	—	—
4000 Cfm	EA (wb)	58	THC	121.6	121.6	136.6	116.7	116.7	131.2	111.4	111.4	125.3	105.7	105.7	118.9	99.2	99.2	111.7
			SHC	106.5	121.6	136.6	102.2	116.7	131.2	97.6	111.4	125.3	92.5	105.7	118.9	86.8	99.2	111.7
		62	THC	122.2	122.2	140.3	117.0	117.0	135.6	111.4	111.4	130.0	105.7	105.7	123.4	99.2	99.2	115.9
			SHC	100.7	120.5	140.3	97.0	116.3	135.6	92.8	111.4	130.0	88.0	105.7	123.4	82.6	99.2	115.9
		67	THC	131.1	131.1	131.1	125.0	125.0	125.0	118.5	118.5	118.5	111.4	111.4	112.6	103.7	103.7	109.4
			SHC	79.9	100.4	120.8	77.4	97.8	118.3	74.7	95.1	115.6	71.8	92.2	112.6	68.7	89.0	109.4
		72	THC	140.9	140.9	140.9	134.6	134.6	134.6	127.7	127.7	127.7	120.3	120.3	120.3	112.1	112.1	112.1
			SHC	57.9	78.6	99.2	55.6	76.2	96.8	53.1	73.7	94.2	50.4	70.9	91.5	47.5	68.0	88.5
		76	THC	—	148.8	148.8	—	142.3	142.3	—	135.2	135.2	—	—	—	—	—	—
			SHC	—	61.3	82.2	—	59.1	80.0	—	56.7	77.5	—	—	—	—	—	—
4500 Cfm	EA (wb)	58	THC	125.3	125.3	140.9	120.2	120.2	135.3	114.8	114.8	129.1	108.8	108.8	122.4	102.4	102.4	115.2
			SHC	109.7	125.3	140.9	105.2	120.2	135.3	100.4	114.8	129.1	95.2	108.8	122.4	89.5	102.4	115.2
		62	THC	125.3	125.3	146.2	120.2	120.2	140.3	114.7	114.7	134.0	108.8	108.8	127.1	102.4	102.4	119.6
			SHC	104.4	125.3	146.2	100.1	120.2	140.3	95.5	114.7	134.0	90.5	108.8	127.1	85.1	102.4	119.6
		67	THC	133.0	133.0	133.0	126.8	126.8	126.8	120.1	120.1	123.8	112.9	112.9	120.7	105.1	105.1	117.3
			SHC	83.6	106.4	129.2	81.1	103.8	126.6	78.3	101.0	123.8	75.4	98.0	120.7	72.2	94.8	117.3
		72	THC	142.8	142.8	142.8	136.3	136.3	136.3	129.3	129.3	129.3	121.7	121.7	121.7	113.3	113.3	113.3
			SHC	59.3	82.2	105.1	57.0	79.9	102.8	54.4	77.3	100.2	51.7	74.6	97.5	48.8	71.6	94.5
		76	THC	—	150.5	150.5	—	143.9	143.9	—	—	—	—	—	—	—	—	—
			SHC	—	63.1	86.4	—	60.9	84.1	—	—	—	—	—	—	—	—	—
5000 Cfm	EA (wb)	58	THC	128.4	128.4	144.5	123.2	123.2	138.7	117.6	117.6	132.3	111.4	111.4	125.4	104.7	104.7	117.9
			SHC	112.4	128.4	144.5	107.8	123.2	138.7	102.8	117.6	132.3	97.4	111.4	125.4	91.5	104.7	117.9
		62	THC	128.4	128.4	149.9	123.2	123.2	143.9	117.5	117.5	137.3	111.4	111.4	130.2	104.7	104.7	122.4
			SHC	106.9	128.4	149.9	102.5	123.2	143.9	97.8	117.5	137.3	92.6	111.4	130.2	87.0	104.7	122.4
		67	THC	134.6	134.6	137.2	128.3	128.3	134.5	121.5	121.5	131.6	114.2	114.2	128.3	106.3	106.3	124.6
			SHC	87.1	112.2	137.2	84.6	109.5	134.5	81.8	106.7	131.6	78.8	103.6	128.3	75.5	100.1	124.6
		72	THC	144.2	144.2	144.2	137.7	137.7	137.7	130.6	130.6	130.6	122.8	122.8	122.8	114.4	114.4	114.4
			SHC	60.6	85.8	111.0	58.3	83.5	108.6	55.8	80.9	106.1	53.0	78.2	103.3	50.1	75.2	100.3
		76	THC	—	151.9	151.9	—	—	—	—	—	—	—	—	—	—	—	—
			SHC	—	64.9	90.4	—	—	—	—	—	—	—	—	—	—	—	—

LEGEND

db — dry bulb
EA — Entering Air (F)
SHC — Sensible Heat Capacity (1000 Btuh) gross
THC — Total Capacity (1000 Btuh) gross
wb — wet bulb

38AUD12/40RUA14 COMBINATION RATINGS — 60 Hz

				Ambient Temperature (F)														
				85			95			105			115			125		
				EA (db)			EA (db)			EA (db)			EA (db)			EA (db)		
				75	80	85	75	80	85	75	80	85	75	80	85	75	80	85
3750 Cfm	EA (wb)	58	THC	118.1	118.1	133.1	113.8	113.8	128.3	109.1	109.1	123.0	103.9	103.9	117.1	98.2	98.2	110.7
			SHC	103.1	118.1	133.1	99.4	113.8	128.3	95.3	109.1	123.0	90.7	103.9	117.1	85.8	98.2	110.7
		62	THC	120.1	120.1	133.8	115.0	115.0	130.9	109.5	109.5	127.1	104.1	104.1	121.7	98.3	98.3	115.0
			SHC	96.2	115.0	133.8	93.6	112.3	130.9	90.5	108.8	127.1	86.4	104.1	121.7	81.7	98.3	115.0
		67	THC	130.2	130.2	130.2	124.8	124.8	124.8	118.7	118.7	118.7	112.0	112.0	112.0	104.6	104.6	105.5
			SHC	77.7	96.9	116.0	75.5	94.6	113.8	73.0	92.2	111.3	70.4	89.5	108.6	67.4	86.4	105.5
		72	THC	140.9	140.9	140.9	135.4	135.4	135.4	129.2	129.2	129.2	122.3	122.3	122.3	114.6	114.6	114.6
			SHC	58.0	77.3	96.6	56.0	75.3	94.5	53.7	73.0	92.2	51.2	70.4	89.7	48.4	67.6	86.8
		76	THC	—	149.8	149.8	—	144.2	144.2	—	137.8	137.8	—	130.6	130.6	—	122.6	122.6
			SHC	—	61.4	81.1	—	59.4	79.1	—	57.3	76.9	—	54.9	74.5	—	52.2	71.7
4300 Cfm	EA (wb)	58	THC	122.7	122.7	138.2	118.2	118.2	133.2	113.3	113.3	127.7	107.9	107.9	121.5	101.8	101.8	114.7
			SHC	107.1	122.7	138.2	103.3	118.2	133.2	98.9	113.3	127.7	94.1	107.9	121.5	88.9	101.8	114.7
		62	THC	123.2	123.2	142.6	118.4	118.4	138.1	113.4	113.4	132.5	108.0	108.0	126.2	101.9	101.9	119.1
			SHC	101.5	122.0	142.6	98.2	118.1	138.1	94.1	113.3	132.5	89.7	108.0	126.2	84.6	101.9	119.1
		67	THC	132.3	132.3	132.3	126.8	126.8	126.8	120.6	120.6	121.3	113.8	113.8	118.1	106.3	106.3	114.4
			SHC	81.8	103.6	125.2	79.6	101.3	123.0	77.1	98.8	120.5	74.4	96.0	117.7	71.4	92.9	114.4
		72	THC	143.1	143.1	143.1	137.4	137.4	137.4	131.0	131.0	131.0	124.0	124.0	124.0	116.1	116.1	116.1
			SHC	59.7	81.4	103.3	57.7	79.4	101.2	55.4	77.1	98.9	52.9	74.6	96.3	50.1	71.8	93.5
		76	THC	—	—	—	—	—	—	—	—	—	—	—	—	—	—	—
			SHC	—	—	—	—	—	—	—	—	—	—	—	—	—	—	—
5000 Cfm	EA (wb)	58	THC	127.4	127.4	143.6	122.8	122.8	138.4	117.7	117.7	132.6	111.9	111.9	126.1	105.5	105.5	118.9
			SHC	111.3	127.4	143.6	107.2	122.8	138.4	102.7	117.7	132.6	97.7	111.9	126.1	92.1	105.5	118.9
		62	THC	127.5	127.5	149.1	122.9	122.9	143.7	117.7	117.7	137.7	112.0	112.0	131.0	105.6	105.6	123.5
			SHC	105.9	127.5	149.1	102.1	122.9	143.7	97.8	117.7	137.7	93.0	112.0	131.0	87.7	105.6	123.5
		67	THC	134.4	134.4	136.4	128.9	128.9	134.1	122.6	122.6	131.4	115.7	115.7	128.4	108.0	108.0	124.8
			SHC	86.9	111.7	136.4	84.7	109.4	134.1	82.2	106.8	131.4	79.3	103.8	128.4	76.2	100.5	124.8
		72	THC	145.1	145.1	145.1	139.4	139.4	139.4	132.9	132.9	132.9	125.7	125.7	125.7	117.6	117.6	117.6
			SHC	61.7	86.6	111.5	59.6	84.6	109.5	57.4	82.3	107.2	54.8	79.7	104.6	52.1	76.9	101.7
		76	THC	—	—	—	—	—	—	—	—	—	—	—	—	—	—	—
			SHC	—	—	—	—	—	—	—	—	—	—	—	—	—	—	—
5700 Cfm	EA (wb)	58	THC	131.2	131.2	147.9	126.4	126.4	142.4	121.1	121.1	136.4	115.1	115.1	129.8	108.5	108.5	122.4
			SHC	114.5	131.2	147.9	110.3	126.4	142.4	105.7	121.1	136.4	100.5	115.1	129.8	94.8	108.5	122.4
		62	THC	131.3	131.3	153.5	126.5	126.5	148.0	121.2	121.2	141.7	115.2	115.2	134.7	108.6	108.6	127.1
			SHC	109.0	131.3	153.5	105.1	126.5	148.0	100.6	121.2	141.7	95.7	115.2	134.7	90.3	108.6	127.1
		67	THC	136.1	136.1	146.9	130.5	130.5	144.4	124.2	124.2	141.6	117.2	117.2	138.0	109.6	109.6	133.8
			SHC	91.6	119.3	146.9	89.3	116.9	144.4	86.7	114.2	141.6	83.8	111.0	138.0	80.2	107.0	133.8
		72	THC	146.6	146.6	146.6	140.9	140.9	140.9	134.2	134.2	134.2	126.9	126.9	126.9	118.7	118.7	118.7
			SHC	63.5	91.5	119.6	61.5	89.5	117.5	59.3	87.2	115.2	56.7	84.6	112.6	54.0	81.8	109.7
		76	THC	—	—	—	—	—	—	—	—	—	—	—	—	—	—	—
			SHC	—	—	—	—	—	—	—	—	—	—	—	—	—	—	—
6250 Cfm	EA (wb)	58	THC	133.5	133.5	150.5	128.7	128.7	145.0	123.3	123.3	138.9	117.2	117.2	132.1	110.5	110.5	124.5
			SHC	116.6	133.5	150.5	112.4	128.7	145.0	107.6	123.3	138.9	102.3	117.2	132.1	96.4	110.5	124.5
		62	THC	133.6	133.6	156.3	128.8	128.8	150.6	123.3	123.3	144.2	117.3	117.3	137.1	110.5	110.5	129.2
			SHC	111.0	133.6	156.3	107.0	128.8	150.6	102.5	123.3	144.2	97.4	117.3	137.1	91.8	110.5	129.2
		67	THC	137.1	137.1	154.6	131.5	131.5	151.9	125.1	125.1	148.6	118.2	118.2	144.5	110.8	110.8	138.2
			SHC	95.1	124.8	154.6	92.7	122.3	151.9	89.9	119.3	148.6	86.7	115.6	144.5	82.4	110.3	138.2
		72	THC	147.5	147.5	147.5	141.7	141.7	141.7	135.0	135.0	135.0	127.6	127.6	127.6	119.4	119.4	119.4
			SHC	65.0	95.3	125.6	63.0	93.3	123.6	60.7	91.0	121.2	58.2	88.4	118.6	55.4	85.6	115.8
		76	THC	—	—	—	—	—	—	—	—	—	—	—	—	—	—	—
			SHC	—	—	—	—	—	—	—	—	—	—	—	—	—	—	—

LEGEND

db — dry bulb
EA — Entering Air (F)
SHC — Sensible Heat Capacity (1000 Btuh) gross
THC — Total Capacity (1000 Btuh) gross
wb — wet bulb

38AUZ14/40RUA14 COMBINATION RATINGS — 60 Hz

				Ambient Temperature (F)														
				85			95			105			115			125		
				EA (db)			EA (db)			EA (db)			EA (db)			EA (db)		
				75	80	85	75	80	85	75	80	85	75	80	85	75	80	85
3750 Cfm	EA (wb)	58	THC	138.4	138.4	152.4	133.2	133.2	147.0	127.6	127.6	141.2	121.6	121.6	135.0	113.3	113.3	126.5
			SHC	124.5	138.4	152.4	119.4	133.2	147.0	114.0	127.6	141.2	108.2	121.6	135.0	100.2	113.3	126.5
		62	THC	144.5	144.5	144.5	137.9	137.9	138.9	131.0	131.0	135.4	123.7	123.7	131.6	114.0	114.0	120.6
			SHC	114.9	128.6	142.3	111.8	125.4	138.9	108.6	122.0	135.4	105.0	118.3	131.6	91.0	108.3	120.6
		67	THC	156.4	156.4	156.4	149.4	149.4	149.4	141.9	141.9	141.9	134.0	134.0	134.0	125.3	125.3	125.3
			SHC	95.6	108.7	121.7	92.7	105.7	118.6	89.7	102.5	115.3	86.5	99.2	111.9	83.1	95.7	108.2
		72	THC	168.6	168.6	168.6	161.2	161.2	161.2	153.4	153.4	153.4	144.8	144.8	144.8	135.6	135.6	135.6
			SHC	75.7	88.1	100.4	73.0	85.2	97.5	70.1	82.2	94.3	67.0	79.0	91.0	63.8	75.6	87.4
		76	THC	—	178.5	178.5	—	170.8	170.8	—	162.6	162.6	—	153.6	153.6	—	143.9	143.9
			SHC	—	71.4	83.2	—	68.7	80.3	—	65.8	77.3	—	62.7	74.0	—	59.4	70.6
4375 Cfm	EA (wb)	58	THC	145.4	145.4	161.2	139.7	139.7	155.4	133.7	133.7	149.2	127.3	127.3	142.6	121.3	121.3	136.3
			SHC	129.5	145.4	161.2	124.0	139.7	155.4	118.3	133.7	149.2	112.1	127.3	142.6	106.3	121.3	136.3
		62	THC	148.6	148.6	155.2	141.9	141.9	151.6	134.8	134.8	147.6	127.5	127.5	142.8	121.2	121.2	136.1
			SHC	123.8	139.5	155.2	120.5	136.0	151.6	116.8	132.2	147.6	112.3	127.5	142.8	106.1	121.1	136.1
		67	THC	160.2	160.2	160.2	152.9	152.9	152.9	145.2	145.2	145.2	136.9	136.9	136.9	127.9	127.9	127.9
			SHC	101.9	116.9	131.8	99.0	113.8	128.7	96.0	110.7	125.4	92.8	107.3	121.9	89.3	103.7	118.1
		72	THC	172.3	172.3	172.3	164.7	164.7	164.7	156.5	156.5	156.5	147.7	147.7	147.7	138.1	138.1	138.1
			SHC	79.0	93.2	107.3	76.3	90.3	104.3	73.4	87.3	101.1	70.3	84.0	97.8	67.0	80.6	94.2
		76	THC	—	182.1	182.1	—	174.2	174.2	—	165.6	165.6	—	156.4	156.4	—	146.3	146.3
			SHC	—	74.0	87.5	—	71.3	84.6	—	68.4	81.5	—	65.3	78.3	—	61.9	74.8
5000 Cfm	EA (wb)	58	THC	151.0	151.0	168.8	145.0	145.0	162.6	138.7	138.7	156.0	131.9	131.9	149.0	124.6	124.6	141.4
			SHC	133.2	151.0	168.8	127.5	145.0	162.6	121.4	138.7	156.0	114.9	131.9	149.0	107.9	124.6	141.4
		62	THC	152.2	152.2	166.8	145.3	145.3	162.8	138.9	138.9	156.2	132.0	132.0	149.1	124.7	124.7	141.5
			SHC	131.5	149.1	166.8	127.8	145.3	162.8	121.5	138.9	156.2	115.0	132.0	149.1	107.9	124.7	141.5
		67	THC	163.1	163.1	163.1	155.6	155.6	155.6	147.6	147.6	147.6	139.1	139.1	139.1	130.1	130.1	130.1
			SHC	107.9	124.8	141.6	105.0	121.7	138.5	101.9	118.5	135.1	98.6	115.1	131.5	95.1	111.4	127.7
		72	THC	175.0	175.0	175.0	167.3	167.3	167.3	158.8	158.8	158.8	149.8	149.8	149.8	140.0	140.0	140.0
			SHC	82.1	98.0	113.9	79.4	95.2	111.0	76.5	92.1	107.8	73.4	88.9	104.4	70.1	85.4	100.7
		76	THC	—	184.8	184.8	—	176.6	176.6	—	167.9	167.9	—	158.4	158.4	—	—	—
			SHC	—	76.5	91.6	—	73.8	88.8	—	70.8	85.7	—	67.7	82.4	—	—	—
5625 Cfm	EA (wb)	58	THC	155.6	155.6	175.2	149.4	149.4	168.8	142.8	142.8	161.9	135.7	135.7	154.5	127.9	127.9	146.4
			SHC	136.0	155.6	175.2	130.0	149.4	168.8	123.7	142.8	161.9	116.8	135.7	154.5	109.4	127.9	146.4
		62	THC	155.7	155.7	175.3	149.5	149.5	168.8	142.9	142.9	162.0	135.8	135.8	154.6	128.0	128.0	146.5
			SHC	136.1	155.7	175.3	130.1	149.5	168.8	123.8	142.9	162.0	117.0	135.8	154.6	109.5	128.0	146.5
		67	THC	165.3	165.3	165.3	157.8	157.8	157.8	149.6	149.6	149.6	140.9	140.9	140.9	131.7	131.7	136.8
			SHC	113.6	132.4	151.2	110.7	129.3	148.0	107.5	126.0	144.5	104.1	122.5	140.8	100.5	118.6	136.8
		72	THC	177.3	177.3	177.3	169.3	169.3	169.3	160.7	160.7	160.7	151.5	151.5	151.5	141.6	141.6	141.6
			SHC	85.0	102.7	120.5	82.3	99.9	117.4	79.4	96.8	114.2	76.3	93.6	110.8	73.0	90.1	107.2
		76	THC	—	187.0	187.0	—	178.7	178.7	—	169.7	169.7	—	—	—	—	—	—
			SHC	—	78.9	95.7	—	76.2	92.8	—	73.2	89.8	—	—	—	—	—	—
6250 Cfm	EA (wb)	58	THC	159.5	159.5	180.9	153.1	153.1	174.3	146.2	146.2	167.1	138.9	138.9	159.5	131.0	131.0	151.2
			SHC	138.0	159.5	180.9	131.9	153.1	174.3	125.3	146.2	167.1	118.3	138.9	159.5	110.7	131.0	151.2
		62	THC	159.6	159.6	181.0	153.2	153.2	174.4	146.3	146.3	167.2	139.0	139.0	159.5	131.0	131.0	151.2
			SHC	138.2	159.6	181.0	132.0	153.2	174.4	125.5	146.3	167.2	118.4	139.0	159.5	110.7	131.0	151.2
		67	THC	167.2	167.2	167.2	159.5	159.5	159.5	151.2	151.2	153.5	142.5	142.5	149.6	133.1	133.1	145.3
			SHC	119.0	139.7	160.4	116.0	136.6	157.1	112.8	133.1	153.5	109.2	129.4	149.6	105.3	125.3	145.3
		72	THC	179.0	179.0	179.0	170.9	170.9	170.9	162.2	162.2	162.2	152.8	152.8	152.8	142.6	142.6	142.6
			SHC	87.9	107.4	126.8	85.1	104.5	123.8	82.2	101.4	120.6	79.1	98.2	117.2	75.9	94.7	113.5
		76	THC	—	188.7	188.7	—	180.2	180.2	—	—	—	—	—	—	—	—	—
			SHC	—	81.3	99.8	—	78.5	96.9	—	—	—	—	—	—	—	—	—

LEGEND

db — dry bulb
EA — Entering Air (F)
SHC — Sensible Heat Capacity (1000 Btuh) gross
THC — Total Capacity (1000 Btuh) gross
wb — wet bulb

38AUZ14/40RUA16 COMBINATION RATINGS — 60 Hz

				Ambient Temperature (F)														
				85			95			105			115			125		
				EA (db)			EA (db)			EA (db)			EA (db)			EA (db)		
				75	80	85	75	80	85	75	80	85	75	80	85	75	80	85
4500 Cfm	EA (wb)	58	THC	149.9	149.9	166.0	144.0	144.0	160.0	137.7	137.7	153.4	130.8	130.8	146.3	122.9	122.9	138.1
			SHC	133.8	149.9	166.0	128.1	144.0	160.0	122.0	137.7	153.4	115.3	130.8	146.3	107.8	122.9	138.1
		62	THC	152.8	152.8	160.5	145.8	145.8	156.7	138.6	138.6	152.1	131.1	131.1	146.5	122.0	122.0	137.1
			SHC	128.7	144.6	160.5	125.2	141.0	156.7	120.8	136.5	152.1	115.6	131.1	146.5	106.8	122.0	137.1
		67	THC	164.6	164.6	164.6	157.1	157.1	157.1	149.0	149.0	149.0	140.3	140.3	140.3	—	—	—
			SHC	105.8	120.9	136.1	102.8	117.8	132.9	99.7	114.5	129.5	96.2	111.0	125.8	—	—	—
		72	THC	176.9	176.9	176.9	169.1	169.1	169.1	160.6	160.6	160.6	151.4	151.4	151.4	—	—	—
			SHC	81.9	96.2	110.5	79.1	93.3	107.5	76.1	90.1	104.2	72.9	86.7	100.7	—	—	—
		76	THC	—	187.1	187.1	—	179.0	179.0	—	169.7	169.7	—	—	—	—	—	—
			SHC	—	76.2	89.7	—	73.4	86.9	—	69.9	82.9	—	—	—	—	—	—
5300 Cfm	EA (wb)	58	THC	156.6	156.6	175.0	150.4	150.4	168.6	143.7	143.7	161.7	136.4	136.4	154.1	124.7	124.7	141.2
			SHC	138.2	156.6	175.0	132.2	150.4	168.6	125.8	143.7	161.7	118.8	136.4	154.1	108.2	124.7	141.2
		62	THC	157.6	157.6	173.5	150.7	150.7	168.8	143.8	143.8	161.7	136.5	136.5	154.2	125.1	125.1	141.6
			SHC	136.9	155.2	173.5	132.5	150.7	168.8	125.9	143.8	161.7	118.9	136.5	154.2	108.6	125.1	141.6
		67	THC	167.9	167.9	167.9	160.2	160.2	160.2	151.8	151.8	152.2	142.9	142.9	144.4	—	—	—
			SHC	113.4	131.0	148.5	110.5	127.9	145.3	107.3	124.5	141.7	103.8	120.9	138.0	—	—	—
		72	THC	180.2	180.2	180.2	172.1	172.1	172.1	163.4	163.4	163.4	153.9	153.9	153.9	—	—	—
			SHC	85.9	102.4	118.8	83.1	99.5	115.8	80.1	96.3	112.5	76.9	92.9	109.0	—	—	—
		76	THC	—	189.4	189.4	—	181.2	181.2	—	—	—	—	—	—	—	—	—
			SHC	—	78.2	93.1	—	75.5	90.3	—	—	—	—	—	—	—	—	—
6000 Cfm	EA (wb)	58	THC	161.3	161.3	181.5	154.9	154.9	174.9	147.8	147.8	167.6	140.3	140.3	159.7	—	—	—
			SHC	141.1	161.3	181.5	134.9	154.9	174.9	128.1	147.8	167.6	120.9	140.3	159.7	—	—	—
		62	THC	161.7	161.7	181.1	155.0	155.0	175.0	148.0	148.0	167.7	140.4	140.4	159.8	—	—	—
			SHC	140.7	160.9	181.1	135.0	155.0	175.0	128.2	148.0	167.7	121.0	140.4	159.8	—	—	—
		67	THC	170.1	170.1	170.1	162.3	162.3	162.3	153.8	153.8	155.1	144.7	144.7	149.9	—	—	—
			SHC	119.6	139.1	158.6	116.6	136.0	155.3	113.3	132.5	151.6	109.7	128.7	147.7	—	—	—
		72	THC	182.3	182.3	182.3	174.1	174.1	174.1	165.2	165.2	165.2	155.4	155.4	155.4	—	—	—
			SHC	89.1	107.4	125.7	86.3	104.5	122.7	83.3	101.3	119.4	80.1	97.9	115.8	—	—	—
		76	THC	—	—	—	—	—	—	—	—	—	—	—	—	—	—	—
			SHC	—	—	—	—	—	—	—	—	—	—	—	—	—	—	—
6800 Cfm	EA (wb)	58	THC	166.2	166.2	188.7	159.5	159.5	181.8	152.2	152.2	174.2	144.3	144.3	165.9	—	—	—
			SHC	143.6	166.2	188.7	137.2	159.5	181.8	130.2	152.2	174.2	122.6	144.3	165.9	—	—	—
		62	THC	166.3	166.3	188.8	159.6	159.6	181.9	152.3	152.3	174.3	144.4	144.4	166.0	—	—	—
			SHC	143.8	166.3	188.8	137.4	159.6	181.9	130.3	152.3	174.3	122.7	144.4	166.0	—	—	—
		67	THC	172.4	172.4	175.3	164.5	164.5	169.2	155.9	155.9	163.4	146.7	146.7	159.1	—	—	—
			SHC	126.9	148.8	170.7	123.8	145.5	167.3	120.3	141.9	163.4	116.3	137.6	159.1	—	—	—
		72	THC	184.4	184.4	184.4	176.1	176.1	176.1	167.0	167.0	167.0	157.1	157.1	157.1	—	—	—
			SHC	93.0	113.5	134.1	90.2	110.6	131.1	87.2	107.5	127.8	84.0	104.1	124.2	—	—	—
		76	THC	—	—	—	—	—	—	—	—	—	—	—	—	—	—	—
			SHC	—	—	—	—	—	—	—	—	—	—	—	—	—	—	—
7500 Cfm	EA (wb)	58	THC	170.1	170.1	194.7	163.2	163.2	187.6	155.7	155.7	179.7	147.5	147.5	171.2	—	—	—
			SHC	145.4	170.1	194.7	138.8	163.2	187.6	131.6	155.7	179.7	123.8	147.5	171.2	—	—	—
		62	THC	170.2	170.2	194.8	163.3	163.3	187.7	155.8	155.8	179.8	147.6	147.6	171.3	—	—	—
			SHC	145.6	170.2	194.8	139.0	163.3	187.7	131.7	155.8	179.8	123.9	147.6	171.3	—	—	—
		67	THC	174.3	174.3	181.8	166.3	166.3	178.1	157.7	157.7	174.0	148.4	148.4	169.1	—	—	—
			SHC	133.4	157.6	181.8	130.1	154.1	178.1	126.4	150.2	174.0	122.0	145.5	169.1	—	—	—
		72	THC	186.0	186.0	186.0	177.6	177.6	177.6	168.4	168.4	168.4	158.4	158.4	158.4	—	—	—
			SHC	96.5	119.2	141.9	93.8	116.3	138.9	90.8	113.2	135.6	87.6	109.8	132.0	—	—	—
		76	THC	—	—	—	—	—	—	—	—	—	—	—	—	—	—	—
			SHC	—	—	—	—	—	—	—	—	—	—	—	—	—	—	—

LEGEND

db — dry bulb
EA — Entering Air (F)
SHC — Sensible Heat Capacity (1000 Btuh) gross
THC — Total Capacity (1000 Btuh) gross
wb — wet bulb

38AUD14/40RUA14 COMBINATION RATINGS — 60 Hz

				Ambient Temperature (F)														
				85			95			105			115			125		
				EA (db)			EA (db)			EA (db)			EA (db)			EA (db)		
				75	80	85	75	80	85	75	80	85	75	80	85	75	80	85
3750 Cfm	EA (wb)	58	THC	137.2	137.2	152.7	132.4	132.4	147.9	127.1	127.1	142.6	121.2	121.2	136.7	114.7	114.7	130.2
			SHC	121.7	137.2	152.7	117.0	132.4	147.9	111.6	127.1	142.6	105.8	121.2	136.7	99.3	114.7	130.2
		62	THC	143.2	143.2	143.2	137.3	137.3	140.1	130.6	130.6	136.8	123.3	123.3	133.1	115.5	115.5	128.8
			SHC	112.0	127.5	142.9	109.1	124.6	140.1	105.9	121.3	136.8	102.2	117.7	133.1	97.9	113.3	128.8
		67	THC	154.9	154.9	154.9	148.6	148.6	148.6	141.6	141.6	141.6	133.9	133.9	133.9	125.4	125.4	125.4
			SHC	91.1	106.5	122.0	88.4	103.9	119.4	85.5	101.0	116.5	82.3	97.8	113.3	78.9	94.3	109.8
		72	THC	166.4	166.4	166.4	160.0	160.0	160.0	152.9	152.9	152.9	144.8	144.8	144.8	135.8	135.8	135.8
			SHC	69.8	85.3	100.7	67.4	82.9	98.4	64.8	80.3	95.7	61.8	77.3	92.8	58.6	74.0	89.5
		76	THC	—	175.4	175.4	—	169.0	169.0	—	161.5	161.5	—	153.2	153.2	—	—	—
			SHC	—	67.2	82.7	—	65.5	81.0	—	63.3	78.8	—	60.7	76.2	—	—	—
4375 Cfm	EA (wb)	58	THC	143.6	143.6	161.7	138.6	138.6	156.7	133.0	133.0	151.0	126.7	126.7	144.8	119.9	119.9	137.9
			SHC	125.6	143.6	161.7	120.6	138.6	156.7	114.9	133.0	151.0	108.7	126.7	144.8	101.8	119.9	137.9
		62	THC	147.0	147.0	155.9	140.8	140.8	152.8	134.1	134.1	149.0	127.7	127.7	141.1	120.7	120.7	134.7
			SHC	119.8	137.9	155.9	116.7	134.7	152.8	112.9	130.9	149.0	105.0	123.1	141.1	98.6	116.6	134.7
		67	THC	158.8	158.8	158.8	152.3	152.3	152.3	145.0	145.0	145.0	137.0	137.0	137.0	128.1	128.1	128.1
			SHC	96.4	114.4	132.5	93.7	111.8	129.8	90.8	108.9	126.9	87.6	105.6	123.7	84.1	102.1	120.2
		72	THC	170.6	170.6	170.6	163.9	163.9	163.9	156.3	156.3	156.3	147.8	147.8	147.8	138.6	138.6	138.6
			SHC	72.3	90.3	108.4	69.8	87.9	105.9	67.1	85.1	103.2	64.1	82.1	100.2	60.8	78.8	96.9
		76	THC	—	179.7	179.7	—	172.7	172.7	—	165.0	165.0	—	—	—	—	—	—
			SHC	—	70.7	88.7	—	68.5	86.6	—	66.1	84.1	—	—	—	—	—	—
5000 Cfm	EA (wb)	58	THC	148.9	148.9	169.6	143.7	143.7	164.3	137.8	137.8	158.4	131.3	131.3	151.9	124.0	124.0	144.7
			SHC	128.3	148.9	169.6	123.1	143.7	164.3	117.2	137.8	158.4	110.6	131.3	151.9	103.4	124.0	144.7
		62	THC	149.9	149.9	167.0	144.2	144.2	160.8	138.6	138.6	154.4	131.8	131.8	149.5	124.0	124.0	144.7
			SHC	125.8	146.4	167.0	119.6	140.2	160.8	113.1	133.8	154.4	108.3	128.9	149.5	103.4	124.0	144.7
		67	THC	161.8	161.8	161.8	155.1	155.1	155.1	147.6	147.6	147.6	139.3	139.3	139.3	130.2	130.2	130.2
			SHC	101.4	122.0	142.6	98.7	119.3	139.9	95.7	116.3	137.0	92.4	113.0	133.7	88.8	109.5	130.1
		72	THC	173.7	173.7	173.7	166.7	166.7	166.7	158.9	158.9	158.9	150.2	150.2	150.2	140.7	140.7	140.7
			SHC	74.4	95.0	115.7	71.9	92.5	113.2	69.2	89.8	110.4	66.1	86.7	107.4	62.8	83.4	104.1
		76	THC	—	183.0	183.0	—	175.8	175.8	—	—	—	—	—	—	—	—	—
			SHC	—	73.4	94.1	—	71.2	91.8	—	—	—	—	—	—	—	—	—
5625 Cfm	EA (wb)	58	THC	153.5	153.5	176.7	148.0	148.0	171.2	141.9	141.9	165.1	135.1	135.1	158.3	127.5	127.5	150.8
			SHC	130.2	153.5	176.7	124.8	148.0	171.2	118.7	141.9	165.1	111.9	135.1	158.3	104.3	127.5	150.8
		62	THC	153.9	153.9	171.9	148.3	148.3	168.2	141.9	141.9	165.0	135.1	135.1	158.3	127.5	127.5	150.7
			SHC	125.5	148.7	171.9	121.8	145.0	168.2	118.6	141.8	165.0	111.9	135.1	158.3	104.3	127.5	150.7
		67	THC	164.1	164.1	164.1	157.3	157.3	157.3	149.7	149.7	149.7	141.2	141.2	143.4	131.9	131.9	139.7
			SHC	106.0	129.2	152.4	103.3	126.5	149.7	100.3	123.5	146.7	97.0	120.2	143.4	93.3	116.5	139.7
		72	THC	176.2	176.2	176.2	169.0	169.0	169.0	161.0	161.0	161.0	152.1	152.1	152.1	142.4	142.4	142.4
			SHC	76.4	99.6	122.8	73.8	97.1	120.3	71.1	94.3	117.5	68.0	91.2	114.4	64.7	87.9	111.1
		76	THC	—	—	—	—	—	—	—	—	—	—	—	—	—	—	—
			SHC	—	—	—	—	—	—	—	—	—	—	—	—	—	—	—
6250 Cfm	EA (wb)	58	THC	157.3	157.3	183.1	151.7	151.7	177.5	145.4	145.4	171.2	138.3	138.3	164.1	130.5	130.5	156.3
			SHC	131.6	157.3	183.1	125.9	151.7	177.5	119.6	145.4	171.2	112.5	138.3	164.1	104.7	130.5	156.3
		62	THC	157.3	157.3	183.1	151.7	151.7	177.5	145.4	145.4	171.1	138.3	138.3	164.1	130.5	130.5	156.3
			SHC	131.6	157.3	183.1	125.9	151.7	177.5	119.6	145.4	171.1	112.5	138.3	164.1	104.7	130.5	156.3
		67	THC	166.1	166.1	166.1	159.2	159.2	159.3	151.3	151.3	156.2	142.7	142.7	152.8	133.2	133.2	149.0
			SHC	110.5	136.3	162.0	107.8	133.5	159.3	104.7	130.5	156.2	101.3	127.0	152.8	97.4	123.2	149.0
		72	THC	178.3	178.3	178.3	170.9	170.9	170.9	162.7	162.7	162.7	153.7	153.7	153.7	143.8	143.8	143.8
			SHC	78.1	103.9	129.7	75.6	101.4	127.2	72.8	98.6	124.4	69.8	95.5	121.3	66.4	92.2	118.0
		76	THC	—	—	—	—	—	—	—	—	—	—	—	—	—	—	—
			SHC	—	—	—	—	—	—	—	—	—	—	—	—	—	—	—

LEGEND

db — dry bulb
EA — Entering Air (F)
SHC — Sensible Heat Capacity (1000 Btuh) gross
THC — Total Capacity (1000 Btuh) gross
wb — wet bulb

38AUD14/40RUA16 COMBINATION RATINGS — 60 Hz

				Ambient Temperature (F)														
				85			95			105			115			125		
				EA (db)			EA (db)			EA (db)			EA (db)			EA (db)		
				75	80	85	75	80	85	75	80	85	75	80	85	75	80	85
4500 Cfm	EA (wb)	58	THC	145.6	145.6	164.1	140.4	140.4	158.2	134.6	134.6	151.7	128.4	128.4	144.6	121.6	121.6	137.0
			SHC	127.1	145.6	164.1	122.5	140.4	158.2	117.5	134.6	151.7	112.1	128.4	144.6	106.2	121.6	137.0
		62	THC	149.1	149.1	162.7	142.7	142.7	159.2	135.8	135.8	155.2	128.8	128.8	149.6	121.7	121.7	142.3
			SHC	117.6	140.1	162.7	114.5	136.8	159.2	110.9	133.1	155.2	106.4	128.0	149.6	101.1	121.7	142.3
		67	THC	161.2	161.2	161.2	154.4	154.4	154.4	147.0	147.0	147.0	138.8	138.8	138.8	130.1	130.1	130.1
			SHC	94.6	117.4	140.3	91.8	114.6	137.5	88.8	111.6	134.5	85.6	108.4	131.2	82.1	104.9	127.7
		72	THC	174.0	174.0	174.0	167.0	167.0	167.0	159.1	159.1	159.1	150.6	150.6	150.6	141.2	141.2	141.2
			SHC	70.0	93.0	116.1	67.4	90.4	113.4	64.6	87.6	110.6	61.6	84.5	107.5	58.3	81.2	104.1
		76	THC	—	184.6	184.6	—	177.3	177.3	—	169.1	169.1	—	160.1	160.1	—	150.3	150.3
			SHC	—	72.9	96.6	—	70.5	94.0	—	67.7	91.2	—	64.8	88.2	—	61.6	85.0
5300 Cfm	EA (wb)	58	THC	152.7	152.7	172.0	147.0	147.0	165.7	140.9	140.9	158.8	134.3	134.3	151.3	127.0	127.0	143.1
			SHC	133.2	152.7	172.0	128.4	147.0	165.7	123.1	140.9	158.8	117.3	134.3	151.3	110.8	127.0	143.1
		62	THC	153.6	153.6	176.8	147.4	147.4	171.5	141.0	141.0	165.0	134.4	134.4	157.2	127.1	127.1	148.6
			SHC	126.2	151.5	176.8	122.0	146.8	171.5	117.2	141.0	165.0	111.6	134.4	157.2	105.6	127.1	148.6
		67	THC	164.9	164.9	164.9	157.8	157.8	157.9	150.2	150.2	150.6	141.7	141.7	144.5	132.6	132.6	140.7
			SHC	100.8	127.3	153.7	98.0	124.5	150.9	95.0	121.4	147.8	91.7	118.1	144.5	88.1	114.4	140.7
		72	THC	177.6	177.6	177.6	170.3	170.3	170.3	162.2	162.2	162.2	153.3	153.3	153.3	143.7	143.7	143.7
			SHC	72.4	99.1	125.7	69.9	96.5	123.1	67.0	93.7	120.2	64.0	90.6	117.1	60.6	87.2	113.7
		76	THC	—	188.2	188.2	—	180.6	180.6	—	172.1	172.1	—	162.9	162.9	—	152.8	152.8
			SHC	—	76.0	103.2	—	73.5	100.6	—	70.8	97.9	—	67.9	94.9	—	64.7	91.6
6000 Cfm	EA (wb)	58	THC	157.7	157.7	177.7	151.8	151.8	171.1	145.5	145.5	163.9	138.5	138.5	156.1	130.9	130.9	147.5
			SHC	137.6	157.7	177.7	132.6	151.8	171.1	127.0	145.5	163.9	120.9	138.5	156.1	114.3	130.9	147.5
		62	THC	157.8	157.8	184.5	152.0	152.0	177.7	145.6	145.6	170.2	138.6	138.6	162.1	131.0	131.0	153.2
			SHC	131.1	157.8	184.5	126.2	152.0	177.7	120.9	145.6	170.2	115.1	138.6	162.1	108.8	131.0	153.2
		67	THC	167.2	167.2	167.2	160.1	160.1	162.1	152.3	152.3	158.9	143.7	143.7	155.3	134.6	134.6	151.3
			SHC	105.9	135.5	165.0	103.1	132.6	162.1	100.0	129.5	158.9	96.7	126.0	155.3	93.0	122.1	151.3
		72	THC	180.0	180.0	180.0	172.6	172.6	172.6	164.3	164.3	164.3	155.3	155.3	155.3	145.4	145.4	145.4
			SHC	74.5	104.3	134.0	72.0	101.6	131.3	69.1	98.8	128.4	66.1	95.7	125.3	62.7	92.3	121.9
		76	THC	—	190.6	190.6	—	182.8	182.8	—	174.2	174.2	—	164.8	164.8	—	154.6	154.6
			SHC	—	78.6	108.9	—	76.1	106.3	—	73.4	103.5	—	70.5	100.5	—	67.3	97.3
6800 Cfm	EA (wb)	58	THC	162.2	162.2	182.9	156.2	156.2	176.1	149.6	149.6	168.6	142.4	142.4	160.4	134.5	134.5	151.5
			SHC	141.7	162.2	182.9	136.4	156.2	176.1	130.7	149.6	168.6	124.3	142.4	160.4	117.4	134.5	151.5
		62	THC	162.4	162.4	190.0	156.3	156.3	182.9	149.7	149.7	175.1	142.5	142.5	166.6	134.6	134.6	157.3
			SHC	134.9	162.4	190.0	129.9	156.3	182.9	124.4	149.7	175.1	118.4	142.5	166.6	111.8	134.6	157.3
		67	THC	169.5	169.5	177.2	162.2	162.2	174.2	154.3	154.3	170.7	145.7	145.7	166.7	136.4	136.4	162.1
			SHC	111.5	144.4	177.2	108.6	141.4	174.2	105.5	138.1	170.7	101.9	134.4	166.7	98.1	130.0	162.1
		72	THC	182.2	182.2	182.2	174.6	174.6	174.6	166.2	166.2	166.2	157.0	157.0	157.0	146.9	146.9	146.9
			SHC	76.8	109.9	143.1	74.2	107.3	140.5	71.4	104.4	137.6	68.3	101.3	134.5	65.0	97.9	131.0
		76	THC	—	—	—	—	—	—	—	—	—	—	—	—	—	—	—
			SHC	—	—	—	—	—	—	—	—	—	—	—	—	—	—	—
7500 Cfm	EA (wb)	58	THC	165.7	165.7	186.8	159.6	159.6	179.8	152.7	152.7	172.1	145.2	145.2	163.7	137.1	137.1	154.5
			SHC	144.7	165.7	186.8	139.3	159.6	179.8	133.4	152.7	172.1	126.8	145.2	163.7	119.7	137.1	154.5
		62	THC	165.9	165.9	193.9	159.6	159.6	186.7	152.8	152.8	178.7	145.3	145.3	169.9	137.2	137.2	160.4
			SHC	137.8	165.9	193.9	132.6	159.6	186.7	126.9	152.8	178.7	120.7	145.3	169.9	113.9	137.2	160.4
		67	THC	171.2	171.2	187.4	163.9	163.9	184.1	155.9	155.9	180.3	147.2	147.2	175.8	137.9	137.9	170.1
			SHC	116.2	151.8	187.4	113.2	148.7	184.1	109.9	145.1	180.3	106.2	141.0	175.8	101.8	135.9	170.1
		72	THC	183.8	183.8	183.8	176.0	176.0	176.0	167.5	167.5	167.5	158.2	158.2	158.2	148.0	148.0	148.0
			SHC	78.7	114.8	150.9	76.1	112.2	148.3	73.3	109.3	145.4	70.2	106.2	142.2	66.9	102.8	138.7
		76	THC	—	—	—	—	—	—	—	—	—	—	—	—	—	—	—
			SHC	—	—	—	—	—	—	—	—	—	—	—	—	—	—	—

LEGEND

db — dry bulb
EA — Entering Air (F)
SHC — Sensible Heat Capacity (1000 Btuh) gross
THC — Total Capacity (1000 Btuh) gross
wb — wet bulb

38AUZ16/40RUA16 COMBINATION RATINGS — 60 Hz

				Ambient Temperature (F)														
				85			95			105			115			125		
				EA (db)			EA (db)			EA (db)			EA (db)			EA (db)		
				75	80	85	75	80	85	75	80	85	75	80	85	75	80	85
4500 cfm	EA (wb)	58	THC	169.9	169.9	190.5	164.1	164.1	184.2	157.5	157.5	176.8	151.4	151.4	170.0	—	—	—
			SHC	148.9	169.7	190.5	143.9	164.1	184.2	138.1	157.5	176.8	132.7	151.4	170.0	—	—	—
		62	THC	178.8	178.8	178.8	171.5	171.5	174.3	163.3	163.3	170.5	155.3	155.3	166.3	146.7	146.7	161.9
			SHC	133.1	155.4	177.8	129.5	151.9	174.3	125.7	148.1	170.5	121.7	144.0	166.3	117.4	139.7	161.9
		67	THC	193.8	193.8	193.8	186.0	186.0	186.0	177.5	177.5	177.5	168.6	168.6	168.6	—	—	—
			SHC	108.6	130.7	152.8	105.2	127.4	149.5	101.6	123.8	146.0	97.8	120.1	142.4	—	—	—
		72	THC	210.1	210.1	210.1	201.7	201.7	201.7	192.6	192.6	192.6	182.7	182.7	182.7	—	—	—
			SHC	85.0	106.1	127.1	81.6	103.0	124.3	77.9	99.5	121.1	74.0	95.9	117.7	—	—	—
		76	THC	—	223.4	223.4	—	215	215.0	—	205.5	205.5	—	194.8	194.8	—	—	—
			SHC	—	86.6	111.3	—	82.8	107.5	—	79.6	104.3	—	76.5	101.3	—	—	—
5250 cfm	EA (wb)	58	THC	178.2	178.2	200.2	172.0	172.0	193.3	164.8	164.8	185.2	158.4	158.4	178.0	150.6	150.6	169.3
			SHC	156.3	178.2	200.2	150.8	172.0	193.3	144.4	164.8	185.2	138.7	158.4	178.0	131.9	150.6	169.3
		62	THC	184.0	184.0	193.8	176.0	176.0	189.8	167.6	167.6	185.5	159.7	159.7	180.7	151.0	151.0	174.3
			SHC	142.4	168.1	193.8	138.5	164.1	189.8	134.4	160.0	185.5	130.1	155.4	180.7	124.8	149.6	174.3
		67	THC	199.0	199.0	199.0	190.8	190.8	190.8	181.6	181.6	181.6	172.6	172.6	172.6	—	—	—
			SHC	114.5	140.0	165.6	111.0	136.6	162.2	107.2	132.9	158.6	103.5	129.2	154.9	—	—	—
		72	THC	215.3	215.3	215.3	206.5	206.5	206.5	196.9	196.9	196.9	186.7	186.7	186.7	—	—	—
			SHC	87.1	111.9	136.7	83.7	108.7	133.7	80.0	105.2	130.3	76.2	101.4	126.7	—	—	—
		76	THC	—	229.0	229.0	—	219.8	219.8	—	209.6	209.6	—	198.7	198.7	—	—	—
			SHC	—	89.0	117.8	—	86.3	115.2	—	83.2	105.2	—	79.7	103.1	—	—	—
6000 cfm	EA (wb)	58	THC	185.2	185.2	208.1	178.7	178.7	200.8	170.9	170.9	192.2	164.2	164.2	184.6	156.1	156.1	175.6
			SHC	162.2	185.2	208.1	156.5	178.7	200.8	149.6	170.9	192.2	143.7	164.2	184.6	136.6	156.1	175.6
		62	THC	188.1	188.1	208.1	180.3	180.3	203.5	172.4	172.4	196.5	164.5	164.5	189.5	156.3	156.3	181.6
			SHC	150.7	179.4	208.1	146.6	175.1	203.5	141.1	168.8	196.5	135.6	162.5	189.5	129.7	155.6	181.6
		67	THC	203.1	203.1	203.1	194.6	194.6	194.6	185.6	185.6	185.6	175.8	175.8	175.8	—	—	—
			SHC	120.0	148.9	177.8	116.6	145.5	174.4	112.8	141.8	170.8	108.9	137.9	166.9	—	—	—
		72	THC	219.3	219.3	219.3	210.2	210.2	210.2	200.2	200.2	200.2	189.8	189.8	189.8	—	—	—
			SHC	89.2	117.4	145.7	85.8	114.2	142.6	82.0	110.6	139.1	78.2	106.8	135.5	—	—	—
		76	THC	—	232.9	232.9	—	223.4	223.4	—	213.1	213.1	—	201.9	201.9	—	—	—
			SHC	—	92.4	116.9	—	89.4	115.2	—	86.2	112.9	—	82.6	110.0	—	—	—
6750 cfm	EA (wb)	58	THC	191.0	191.0	214.8	184.2	184.2	207.2	176.6	176.6	198.6	169.0	169.0	190.1	160.6	160.6	180.7
			SHC	167.3	191.0	214.8	161.2	184.2	207.2	154.5	176.6	198.6	147.8	169.0	190.1	140.5	160.6	180.7
		62	THC	192.1	192.1	219.7	184.5	184.5	212.5	177.8	177.8	202.9	168.9	168.9	197.3	160.6	160.6	187.6
			SHC	157.7	188.7	219.7	152.1	182.3	212.5	145.5	174.2	202.9	140.6	168.9	197.3	133.6	160.6	187.6
		67	THC	206.4	206.4	206.4	197.7	197.7	197.7	188.2	188.2	188.2	178.4	178.4	178.5	—	—	—
			SHC	125.4	157.5	189.7	121.8	154.0	186.2	118.0	150.2	182.5	114.1	146.3	178.5	—	—	—
		72	THC	222.5	222.5	222.5	213.1	213.1	213.1	203.1	203.1	203.1	192.4	192.4	192.4	—	—	—
			SHC	91.1	122.7	154.3	87.7	119.4	151.1	84.0	115.8	147.5	80.2	112.1	144.0	—	—	—
		76	THC	—	236.1	236.1	—	226.5	226.5	—	215.9	215.9	—	204.4	204.4	—	—	—
			SHC	—	95.3	124.6	—	92.3	122.2	—	89.0	119.5	—	85.4	116.3	—	—	—
7500 cfm	EA (wb)	58	THC	196.0	196.0	220.5	189.0	189.0	212.6	181.2	181.2	204.0	173.1	173.1	194.8	—	—	—
			SHC	171.5	196.0	220.5	165.3	189.0	212.6	158.5	181.2	204.0	151.4	173.1	194.8	—	—	—
		62	THC	196.1	196.1	228.2	189.0	189.0	220.6	182.3	182.3	207.2	173.1	173.1	202.2	—	—	—
			SHC	162.9	195.5	228.2	157.3	189.0	220.6	148.6	177.9	207.2	144.0	173.1	202.2	—	—	—
		67	THC	209.1	209.1	209.1	200.2	200.2	200.2	190.5	190.5	193.8	180.5	180.5	189.7	—	—	—
			SHC	130.5	165.8	201.1	126.9	162.2	197.6	123.1	158.4	193.8	119.1	154.4	189.7	—	—	—
		72	THC	225.2	225.2	225.2	215.6	215.6	215.6	205.4	205.4	205.4	194.4	194.4	194.4	—	—	—
			SHC	93.0	127.9	162.7	89.6	124.5	159.4	85.9	120.9	155.9	82.0	117.1	152.2	—	—	—
		76	THC	—	238.9	238.9	—	229.0	229.0	—	218.1	218.1	—	206.4	206.4	—	—	—
			SHC	—	98.1	131.2	—	95.0	128.6	—	91.6	125.6	—	88.0	122.3	—	—	—

LEGEND

db — dry bulb
EA — Entering Air (F)
SHC — Sensible Heat Capacity (1000 Btuh) gross
THC — Total Capacity (1000 Btuh) gross
wb — wet bulb

38AUZ16/40RUA25 COMBINATION RATINGS — 60 Hz

				Ambient Temperature (F)														
				85			95			105			115			125		
				EA (db)			EA (db)			EA (db)			EA (db)			EA (db)		
				75	80	85	75	80	85	75	80	85	75	80	85	75	80	85
6000 Cfm	EA (wb)	58	THC	188.1	188.1	211.9	181.9	181.9	205.0	175.2	175.2	197.4	167.8	167.8	189.1	159.7	159.7	180.0
			SHC	164.2	188.1	211.9	158.8	181.9	205.0	153.0	175.2	197.4	146.5	167.8	189.1	139.4	159.7	180.0
		62	THC	189.5	189.5	216.5	182.5	182.5	212.0	175.4	175.4	205.1	168.0	168.0	196.4	159.8	159.8	186.9
			SHC	154.7	185.6	216.5	150.8	181.4	212.0	145.7	175.4	205.1	139.5	168.0	196.4	132.7	159.8	186.9
		67	THC	203.3	203.3	203.3	195.6	195.6	195.6	187.2	187.2	187.2	177.9	177.9	177.9	167.8	167.8	172.0
			SHC	123.2	154.9	186.5	120.1	151.7	183.3	116.7	148.3	179.9	113.0	144.6	176.1	109.0	140.5	172.0
		72	THC	218.9	218.9	218.9	210.9	210.9	210.9	202.0	202.0	202.0	192.1	192.1	192.1	181.3	181.3	181.3
			SHC	90.2	122.0	153.8	87.2	119.0	150.8	84.0	115.8	147.5	80.5	112.2	143.9	76.7	108.3	140.0
		76	THC	—	232.4	232.4	—	224.0	224.0	—	214.7	214.7	—	—	—	—	—	—
			SHC	—	95.8	128.2	—	92.9	125.2	—	89.8	122.0	—	—	—	—	—	—
7000 Cfm	EA (wb)	58	THC	195.8	195.8	220.6	189.4	189.4	213.4	182.3	182.3	205.4	174.5	174.5	196.6	165.8	165.8	186.9
			SHC	171.0	195.8	220.6	165.3	189.4	213.4	159.1	182.3	205.4	152.4	174.5	196.6	144.8	165.8	186.9
		62	THC	196.0	196.0	229.2	189.5	189.5	221.6	182.4	182.4	213.3	174.6	174.6	204.2	166.0	166.0	194.1
			SHC	162.8	196.0	229.2	157.4	189.5	221.6	151.5	182.4	213.3	145.1	174.6	204.2	137.9	166.0	194.1
		67	THC	207.2	207.2	207.2	199.2	199.2	201.0	190.5	190.5	197.4	181.1	181.1	193.5	170.7	170.7	189.2
			SHC	131.3	167.8	204.3	128.1	164.6	201.0	124.6	161.0	197.4	120.9	157.2	193.5	116.8	153.0	189.2
		72	THC	222.7	222.7	222.7	214.4	214.4	214.4	205.4	205.4	205.4	195.2	195.2	195.2	184.1	184.1	184.1
			SHC	93.3	130.0	166.6	90.3	127.0	163.6	87.1	123.7	160.3	83.6	120.1	156.7	79.7	116.2	152.7
		76	THC	—	236.5	236.5	—	—	—	—	—	—	—	—	—	—	—	—
			SHC	—	100.0	137.1	—	—	—	—	—	—	—	—	—	—	—	—
8000 Cfm	EA (wb)	58	THC	202.0	202.0	227.6	195.3	195.3	220.1	187.9	187.9	211.8	179.8	179.8	202.6	170.7	170.7	192.4
			SHC	176.4	202.0	227.6	170.5	195.3	220.1	164.1	187.9	211.8	157.0	179.8	202.6	149.1	170.7	192.4
		62	THC	202.1	202.1	236.4	195.4	195.4	228.5	188.0	188.0	219.9	179.9	179.9	210.4	170.8	170.8	199.8
			SHC	167.9	202.1	236.4	162.3	195.4	228.5	156.2	188.0	219.9	149.4	179.9	210.4	141.9	170.8	199.8
		67	THC	210.1	210.1	221.2	202.1	202.1	217.8	193.3	193.3	214.0	183.7	183.7	209.7	173.2	173.2	204.8
			SHC	138.9	180.0	221.2	135.7	176.7	217.8	132.2	173.1	214.0	128.3	169.0	209.7	124.0	164.4	204.8
		72	THC	225.7	225.7	225.7	217.3	217.3	217.3	207.9	207.9	207.9	197.6	197.6	197.6	186.2	186.2	186.2
			SHC	96.3	137.7	179.1	93.4	134.7	176.1	90.1	131.4	172.8	86.6	127.8	169.1	82.7	123.9	165.1
		76	THC	—	—	—	—	—	—	—	—	—	—	—	—	—	—	—
			SHC	—	—	—	—	—	—	—	—	—	—	—	—	—	—	—
9000 Cfm	EA (wb)	58	THC	207.1	207.1	233.4	200.2	200.2	225.6	192.6	192.6	217.0	184.1	184.1	207.4	174.8	174.8	196.9
			SHC	180.8	207.1	233.4	174.8	200.2	225.6	168.2	192.6	217.0	160.7	184.1	207.4	152.6	174.8	196.9
		62	THC	207.2	207.2	242.3	200.3	200.3	234.2	192.7	192.7	225.3	184.2	184.2	215.4	174.9	174.9	204.5
			SHC	172.1	207.2	242.3	166.4	200.3	234.2	160.1	192.7	225.3	153.0	184.2	215.4	145.3	174.9	204.5
		67	THC	212.6	212.6	237.2	204.5	204.5	233.5	195.6	195.6	229.3	186.0	186.0	224.4	175.5	175.5	217.9
			SHC	146.2	191.7	237.2	142.9	188.2	233.5	139.2	184.3	229.3	135.1	179.7	224.4	130.1	174.0	217.9
		72	THC	228.0	228.0	228.0	219.4	219.4	219.4	209.9	209.9	209.9	199.5	199.5	199.5	187.9	187.9	187.9
			SHC	99.2	145.3	191.4	96.3	142.3	188.3	93.0	139.0	184.9	89.5	135.4	181.2	85.6	131.4	177.2
		76	THC	—	—	—	—	—	—	—	—	—	—	—	—	—	—	—
			SHC	—	—	—	—	—	—	—	—	—	—	—	—	—	—	—
10000 Cfm	EA (wb)	58	THC	211.4	211.4	238.2	204.3	204.3	230.2	196.4	196.4	221.4	187.8	187.8	211.6	178.1	178.1	200.7
			SHC	184.6	211.4	238.2	178.4	204.3	230.2	171.5	196.4	221.4	164.0	187.8	211.6	155.5	178.1	200.7
		62	THC	211.5	211.5	247.3	204.4	204.4	239.0	196.6	196.6	229.8	187.9	187.9	219.7	178.2	178.2	208.3
			SHC	175.7	211.5	247.3	169.8	204.4	239.0	163.3	196.6	229.8	156.1	187.9	219.7	148.0	178.2	208.3
		67	THC	214.6	214.6	251.9	206.6	206.6	247.8	197.8	197.8	242.7	188.2	188.2	235.9	178.3	178.3	223.5
			SHC	152.9	202.4	251.9	149.4	198.6	247.8	145.4	194.0	242.7	140.5	188.2	235.9	133.1	178.3	223.5
		72	THC	229.9	229.9	229.9	221.2	221.2	221.2	211.6	211.6	211.6	201.0	201.0	201.0	—	—	—
			SHC	102.1	152.7	203.3	99.1	149.7	200.2	95.9	146.4	196.9	92.3	142.7	193.1	—	—	—
		76	THC	—	—	—	—	—	—	—	—	—	—	—	—	—	—	—
			SHC	—	—	—	—	—	—	—	—	—	—	—	—	—	—	—

LEGEND

db — dry bulb
EA — Entering Air (F)
SHC — Sensible Heat Capacity (1000 Btuh) gross
THC — Total Capacity (1000 Btuh) gross
wb — wet bulb

38AUD16/40RUA16 COMBINATION RATINGS — 60 Hz

				Ambient Temperature (F)														
				85			95			105			115			125		
				EA (db)			EA (db)			EA (db)			EA (db)			EA (db)		
				75	80	85	75	80	85	75	80	85	75	80	85	75	80	85
4500 cfm	EA (wb)	58	THC	168.2	168.2	185.7	161.9	161.9	181.8	156.0	156.0	175.2	149.4	149.4	167.8	143.0	143.0	160.7
			SHC	145.7	165.7	185.7	142.0	161.9	181.8	136.7	156.0	175.2	130.9	149.4	167.8	125.3	143.0	160.7
		62	THC	176.6	176.6	176.6	169.7	169.7	172.9	162.2	162.2	169.3	153.7	153.7	165.1	145.0	145.0	160.6
			SHC	131.8	154.0	176.2	128.4	150.7	172.9	124.8	147.0	169.3	120.7	142.9	165.1	116.4	138.5	160.6
		67	THC	192.7	192.7	192.7	185.3	185.3	185.3	177.2	177.2	177.2	168.0	168.0	168.0	158.8	158.8	158.8
			SHC	108.2	130.1	151.9	104.9	126.9	148.9	101.5	123.5	145.5	97.6	119.7	141.8	93.7	115.9	138.1
		72	THC	210.4	210.4	210.4	202.4	202.4	202.4	193.7	193.7	193.7	184.1	184.1	184.1	173.7	173.7	173.7
			SHC	85.4	106.0	126.6	82.1	103.1	124.0	78.6	99.8	121.1	74.9	96.3	117.8	70.9	92.5	114.2
		76	THC	—	224.8	224.8	—	216.8	216.8	—	207.7	207.7	—	197.7	197.7	—	186.5	186.5
			SHC	—	86.9	111.7	—	83.2	107.9	—	80.0	104.8	—	77.2	102.0	—	73.8	96.1
5350 cfm	EA (wb)	58	THC	175.7	175.7	197.4	169.9	169.9	190.9	163.6	163.6	183.9	157.0	157.0	176.5	148.9	148.9	167.4
			SHC	154.0	175.7	197.4	148.9	169.9	190.9	143.3	163.6	183.9	137.5	157.0	176.5	130.3	148.9	167.4
		62	THC	181.7	181.7	192.0	174.2	174.2	188.1	166.6	166.6	184.0	157.8	157.8	179.0	149.9	149.9	172.2
			SHC	141.0	166.5	192.0	137.2	162.7	188.1	133.4	158.7	184.0	128.8	153.9	179.0	123.4	147.8	172.2
		67	THC	198.0	198.0	198.0	190.1	190.1	190.1	181.6	181.6	181.6	172.0	172.0	172.0	162.6	162.6	162.6
			SHC	114.1	139.4	164.7	110.7	136.1	161.5	107.2	132.6	158.1	103.3	128.8	154.3	99.4	124.9	150.4
		72	THC	215.8	215.8	215.8	207.4	207.4	207.4	198.2	198.2	198.2	188.3	188.3	188.3	177.5	177.5	177.5
			SHC	87.6	112.0	136.4	84.4	108.9	133.5	80.8	105.6	130.4	77.1	102.0	127.0	73.1	98.2	123.3
		76	THC	—	230.9	230.9	—	222.1	222.1	—	212.5	212.5	—	202.0	202.0	—	190.4	190.4
			SHC	—	89.4	118.3	—	86.8	115.7	—	83.9	109.4	—	80.7	103.0	—	77.0	100.5
6000 cfm	EA (wb)	58	THC	182.7	182.7	205.3	176.5	176.5	198.5	169.9	169.9	191.0	162.2	162.2	182.4	154.7	154.7	174.0
			SHC	160.0	182.7	205.3	154.6	176.5	198.5	148.7	169.9	191.0	142.0	162.2	182.4	135.3	154.7	174.0
		62	THC	185.8	185.8	205.9	178.6	178.6	200.2	170.8	170.8	195.6	163.3	163.3	186.9	155.9	155.9	177.2
			SHC	149.1	177.5	205.9	144.4	172.3	200.2	140.3	167.9	195.6	134.0	160.5	186.9	127.2	152.2	177.2
		67	THC	202.0	202.0	202.0	193.9	193.9	193.9	185.0	185.0	185.0	175.4	175.4	175.4	165.2	165.2	165.2
			SHC	119.6	148.2	176.9	116.3	144.9	173.6	112.6	141.3	170.1	108.7	137.5	166.3	104.6	133.4	162.2
		72	THC	219.9	219.9	219.9	211.2	211.2	211.2	201.7	201.7	201.7	191.8	191.8	191.8	180.4	180.4	180.4
			SHC	89.8	117.6	145.4	86.5	114.5	142.5	82.9	111.1	139.2	79.2	107.3	135.4	75.1	103.6	132.0
		76	THC	—	235.1	235.1	—	226.2	226.2	—	216.2	216.2	—	205.2	205.2	—	193.3	193.3
			SHC	—	92.9	121.7	—	90.2	114.7	—	87.1	112.8	—	83.7	110.2	—	79.9	107.2
6750 cfm	EA (wb)	58	THC	188.5	188.5	212.0	182.1	182.1	204.8	175.1	175.1	197.0	167.0	167.0	187.9	159.2	159.2	179.2
			SHC	165.0	188.5	212.0	159.4	182.1	204.8	153.2	175.1	197.0	146.1	167.0	187.9	139.2	159.2	179.2
		62	THC	189.7	189.7	216.7	183.3	183.3	208.6	176.4	176.4	200.6	168.7	168.7	191.6	159.2	159.2	185.9
			SHC	155.5	186.1	216.7	149.8	179.2	208.6	144.0	172.3	200.6	137.5	164.6	191.6	132.4	159.2	185.9
		67	THC	205.3	205.3	205.3	196.8	196.8	196.8	187.8	187.8	187.8	178.1	178.1	178.1	167.5	167.5	173.4
			SHC	124.9	156.7	188.6	121.5	153.3	185.2	117.8	149.7	181.6	113.9	145.7	177.6	109.6	141.5	173.4
		72	THC	223.3	223.3	223.3	214.3	214.3	214.3	204.6	204.6	204.6	194.2	194.2	194.2	182.6	182.6	182.6
			SHC	91.8	122.9	154.0	88.5	119.7	151.0	84.9	116.3	147.7	81.2	112.7	144.2	77.1	108.7	140.3
		76	THC	—	238.8	238.8	—	229.4	229.4	—	219.1	219.1	—	207.9	207.9	—	195.4	195.4
			SHC	—	96.1	124.2	—	93.2	122.1	—	90.0	119.6	—	86.5	116.7	—	82.6	113.3
7500 cfm	EA (wb)	58	THC	193.5	193.5	217.7	186.9	186.9	210.2	179.6	179.6	202.1	171.5	171.5	193.1	163.1	163.1	183.6
			SHC	169.3	193.5	217.7	163.5	186.9	210.2	157.1	179.6	202.1	150.0	171.5	193.1	142.6	163.1	183.6
		62	THC	194.9	194.9	221.2	188.2	188.2	213.2	180.1	180.1	207.5	171.5	171.5	200.4	163.1	163.1	190.6
			SHC	158.8	190.0	221.2	153.1	183.2	213.2	148.3	177.9	207.5	142.6	171.5	200.4	135.6	163.1	190.6
		67	THC	207.9	207.9	207.9	199.3	199.3	199.3	190.0	190.0	192.6	180.1	180.1	188.7	169.2	169.2	184.2
			SHC	129.9	164.9	199.8	126.4	161.4	196.4	122.7	157.7	192.6	118.7	153.7	188.7	114.4	149.3	184.2
		72	THC	226.0	226.0	226.0	216.9	216.9	216.9	207.0	207.0	207.0	196.3	196.3	196.3	184.4	184.4	184.4
			SHC	93.7	128.1	162.4	90.4	124.9	159.3	86.9	121.5	156.0	83.1	117.7	152.4	78.9	113.6	148.4
		76	THC	—	241.7	241.7	—	232.1	232.1	—	221.6	221.6	—	210.1	210.1	—	197.2	197.2
			SHC	—	98.9	131.0	—	96.0	128.6	—	92.7	125.9	—	89.2	122.7	—	85.2	119.2

LEGEND

db — dry bulb
EA — Entering Air (F)
SHC — Sensible Heat Capacity (1000 Btuh) gross
THC — Total Capacity (1000 Btuh) gross
wb — wet bulb

38AUD16/40RUA25 COMBINATION RATINGS — 60 Hz

				Ambient Temperature (F)														
				85			95			105			115			125		
				EA (db)			EA (db)			EA (db)			EA (db)			EA (db)		
				75	80	85	75	80	85	75	80	85	75	80	85	75	80	85
6000 Cfm	EA (wb)	58	THC	189.5	189.5	213.0	182.9	182.9	205.6	175.8	175.8	197.7	168.1	168.1	189.0	159.8	159.8	179.8
			SHC	166.0	189.5	213.0	160.2	182.9	205.6	154.0	175.8	197.7	147.1	168.1	189.0	139.9	159.8	179.8
		62	THC	191.7	191.7	215.9	184.0	184.0	211.1	176.3	176.3	203.9	168.3	168.3	196.3	159.8	159.8	186.5
			SHC	155.8	185.8	215.9	151.6	181.3	211.1	146.0	174.9	203.9	140.1	168.2	196.3	133.1	159.8	186.5
		67	THC	207.6	207.6	207.6	199.1	199.1	199.1	189.8	189.8	189.8	180.1	180.1	180.1	169.2	169.2	170.3
			SHC	124.8	155.7	186.5	121.3	152.1	182.9	117.4	148.2	179.0	113.5	144.3	175.1	108.9	139.6	170.3
		72	THC	225.6	225.6	225.6	216.6	216.6	216.6	206.8	206.8	206.8	196.1	196.1	196.1	184.7	184.7	184.7
			SHC	92.7	123.8	154.8	89.3	120.4	151.4	85.7	116.7	147.7	81.8	112.7	143.7	77.6	108.5	139.5
		76	THC	—	240.7	240.7	—	231.2	231.2	—	220.8	220.8	—	209.6	209.6	—	—	—
			SHC	—	98.4	130.4	—	95.2	127.1	—	91.6	123.4	—	87.8	119.4	—	—	—
7000 Cfm	EA (wb)	58	THC	197.6	197.6	222.2	190.6	190.6	214.3	183.0	183.0	205.9	174.8	174.8	196.7	165.9	165.9	186.6
			SHC	173.0	197.6	222.2	166.8	190.6	214.3	160.1	183.0	205.9	152.9	174.8	196.7	145.2	165.9	186.6
		62	THC	197.6	197.6	230.6	190.6	190.6	222.5	183.0	183.0	213.6	174.8	174.8	204.1	165.8	165.8	193.7
			SHC	164.6	197.6	230.6	158.8	190.6	222.5	152.3	183.0	213.6	145.5	174.8	204.1	138.0	165.8	193.7
		67	THC	211.7	211.7	211.7	202.9	202.9	202.9	193.4	193.4	195.5	183.1	183.1	191.2	172.1	172.1	186.3
			SHC	132.4	167.8	203.3	128.7	164.1	199.6	124.8	160.2	195.5	120.6	155.9	191.2	116.0	151.2	186.3
		72	THC	229.8	229.8	229.8	220.5	220.5	220.5	210.3	210.3	210.3	199.3	199.3	199.3	187.6	187.6	187.6
			SHC	95.6	131.3	167.0	92.2	127.9	163.6	88.5	124.2	159.8	84.6	120.1	155.7	80.4	115.8	151.3
		76	THC	—	245.1	245.1	—	235.3	235.3	—	224.5	224.5	—	—	—	—	—	—
			SHC	—	102.4	138.9	—	99.1	135.5	—	95.5	131.8	—	—	—	—	—	—
8000 Cfm	EA (wb)	58	THC	204.0	204.0	229.5	196.7	196.7	221.4	188.8	188.8	212.5	180.1	180.1	202.8	170.9	170.9	192.3
			SHC	178.5	204.0	229.5	172.1	196.7	221.4	165.1	188.8	212.5	157.5	180.1	202.8	149.4	170.9	192.3
		62	THC	204.0	204.0	238.2	196.6	196.6	229.7	188.7	188.7	220.5	180.2	180.2	210.5	170.8	170.8	199.6
			SHC	169.8	204.0	238.2	163.6	196.6	229.7	157.0	188.7	220.5	149.8	180.2	210.5	142.0	170.8	199.6
		67	THC	214.7	214.7	219.1	205.8	205.8	215.2	196.1	196.1	211.0	185.7	185.7	206.3	174.5	174.5	201.0
			SHC	139.4	179.2	219.1	135.7	175.5	215.2	131.7	171.3	211.0	127.3	166.8	206.3	122.6	161.8	201.0
		72	THC	232.9	232.9	232.9	223.4	223.4	223.4	213.0	213.0	213.0	201.7	201.7	201.7	189.2	189.2	189.2
			SHC	98.4	138.6	178.8	94.9	135.1	175.3	91.2	131.3	171.4	87.2	127.2	167.3	82.8	122.8	162.7
		76	THC	—	248.6	248.6	—	—	—	—	—	—	—	—	—	—	—	—
			SHC	—	106.2	147.2	—	—	—	—	—	—	—	—	—	—	—	—
9000 Cfm	EA (wb)	58	THC	209.3	209.3	235.6	201.8	201.8	227.2	193.6	193.6	217.9	184.6	184.6	207.9	174.9	174.9	197.0
			SHC	183.0	209.3	235.6	176.5	201.8	227.2	169.2	193.6	217.9	161.3	184.6	207.9	152.8	174.9	197.0
		62	THC	209.3	209.3	244.5	201.7	201.7	235.7	193.5	193.5	226.2	184.6	184.6	215.8	174.9	174.9	204.5
			SHC	174.1	209.3	244.5	167.8	201.7	235.7	160.9	193.5	226.2	153.4	184.6	215.8	145.3	174.9	204.5
		67	THC	217.2	217.2	234.0	208.2	208.2	230.1	198.2	198.2	225.4	187.7	187.7	220.1	176.6	176.6	213.6
			SHC	145.9	190.0	234.0	142.2	186.1	230.1	138.0	181.7	225.4	133.4	176.7	220.1	128.2	170.9	213.6
		72	THC	235.4	235.4	235.4	225.7	225.7	225.7	215.1	215.1	215.1	203.7	203.7	203.7	191.4	191.4	191.4
			SHC	100.9	145.5	190.0	97.5	142.0	186.5	93.7	138.1	182.6	89.7	134.0	178.3	85.4	129.6	173.7
		76	THC	—	—	—	—	—	—	—	—	—	—	—	—	—	—	—
			SHC	—	—	—	—	—	—	—	—	—	—	—	—	—	—	—
10000 Cfm	EA (wb)	58	THC	213.8	213.8	240.8	206.1	206.1	232.1	197.6	197.6	222.6	188.3	188.3	212.1	178.4	178.4	201.0
			SHC	186.9	213.8	240.8	180.1	206.1	232.1	172.7	197.6	222.6	164.5	188.3	212.1	155.8	178.4	201.0
		62	THC	213.8	213.8	249.9	206.0	206.0	240.8	197.6	197.6	231.0	188.3	188.3	220.3	178.3	178.3	208.6
			SHC	177.8	213.8	249.9	171.2	206.0	240.8	164.1	197.6	231.0	156.4	188.3	220.3	148.0	178.3	208.6
		67	THC	219.3	219.3	248.2	210.1	210.1	243.6	200.2	200.2	238.3	189.7	189.7	232.2	178.9	178.9	222.0
			SHC	152.2	200.2	248.2	148.2	195.9	243.6	143.7	191.0	238.3	138.8	185.5	232.2	132.0	177.0	222.0
		72	THC	237.4	237.4	237.4	227.6	227.6	227.6	216.8	216.8	216.8	205.2	205.2	205.2	192.7	192.7	192.7
			SHC	103.4	152.2	201.1	99.9	148.7	197.5	96.1	144.8	193.5	92.1	140.7	189.2	87.7	136.1	184.5
		76	THC	—	—	—	—	—	—	—	—	—	—	—	—	—	—	—
			SHC	—	—	—	—	—	—	—	—	—	—	—	—	—	—	—

LEGEND

db — dry bulb
EA — Entering Air (F)
SHC — Sensible Heat Capacity (1000 Btuh) gross
THC — Total Capacity (1000 Btuh) gross
wb — wet bulb

38AUZ25/40RUA25 COMBINATION RATINGS — 60 Hz

				Ambient Temperature (F)														
				85			95			105			115			125		
				EA (db)			EA (db)			EA (db)			EA (db)			EA (db)		
				75	80	85	75	80	85	75	80	85	75	80	85	75	80	85
6000 cfm	EA (wb)	58	THC	221.5	221.5	248.3	213.5	213.5	239.8	204.9	204.9	230.0	195.3	195.3	219.4	184.5	184.5	207.4
			SHC	194.2	221.2	248.3	187.3	213.5	239.8	179.7	204.9	230.0	171.2	195.3	219.4	161.7	184.5	207.4
		62	THC	232.4	232.4	232.9	222.4	222.4	228.1	211.4	211.4	222.6	199.4	199.4	216.7	186.5	186.5	209.6
			SHC	173.9	203.4	232.9	169.1	198.6	228.1	163.7	193.2	222.6	157.9	187.3	216.7	151.3	180.5	209.6
		67	THC	251.7	251.7	251.7	240.8	240.8	240.8	228.9	228.9	228.9	215.9	215.9	215.9	201.6	201.6	201.6
			SHC	141.6	170.7	199.8	136.8	166.0	195.3	131.7	161.1	190.4	126.2	155.6	185.0	120.3	149.7	179.2
		72	THC	272.8	272.8	272.8	260.8	260.8	260.8	247.6	247.6	247.6	233.4	233.4	233.4	217.8	217.8	217.8
			SHC	110.4	138.3	166.1	105.5	133.8	162.0	100.3	128.9	157.5	94.8	123.6	152.4	88.9	117.9	147.0
		76	THC	—	290.9	290.9	—	278.1	278.1	—	263.7	263.7	—	248.5	248.5	—	231.6	231.6
			SHC	—	111.5	144.5	—	106.8	139.8	—	103.0	136.0	—	98.3	123.1	—	92.9	120.2
7000 cfm	EA (wb)	58	THC	232.1	232.1	260.6	223.5	223.5	251.1	214.2	214.2	240.7	203.9	203.9	229.2	192.4	192.4	216.4
			SHC	203.5	232.1	260.6	195.9	223.5	251.1	187.7	214.2	240.7	178.6	203.9	229.2	168.5	192.4	216.4
		62	THC	238.9	238.9	253.7	228.3	228.3	248.2	217.1	217.1	242.1	205.0	205.0	234.5	192.8	192.8	222.1
			SHC	186.0	219.8	253.7	180.8	214.5	248.2	175.1	208.6	242.1	168.4	201.5	234.5	159.1	190.6	222.1
		67	THC	258.3	258.3	258.3	246.8	246.8	246.8	234.4	234.4	234.4	220.8	220.8	220.8	205.9	205.9	205.9
			SHC	149.2	182.8	216.5	144.4	178.1	211.8	139.2	173.0	206.7	133.6	167.4	201.2	127.5	161.4	195.3
		72	THC	279.3	279.3	279.3	266.7	266.7	266.7	253.0	253.0	253.0	238.3	238.3	238.3	222.0	222.0	222.0
			SHC	113.2	145.9	178.5	108.3	141.2	174.1	103.1	136.3	169.4	97.6	130.9	164.2	91.5	125.1	158.6
		76	THC	—	297.5	297.5	—	283.8	283.8	—	269.2	269.2	—	253.2	253.2	—	235.5	235.5
			SHC	—	116.1	154.6	—	112.0	138.2	—	107.4	137.4	—	102.4	133.9	—	96.7	129.1
8000 cfm	EA (wb)	58	THC	240.8	240.8	270.6	231.8	231.8	260.5	221.8	221.8	249.4	210.9	210.9	237.2	198.8	198.8	223.6
			SHC	211.0	240.8	270.6	203.0	231.8	260.5	194.2	221.8	249.4	184.6	210.9	237.2	173.9	198.8	223.6
		62	THC	244.2	244.2	271.9	233.5	233.5	265.4	222.6	222.6	255.7	211.0	211.0	245.3	198.8	198.8	232.0
			SHC	196.6	234.3	271.9	190.9	228.2	265.4	183.3	219.5	255.7	175.2	210.2	245.3	165.5	198.8	232.0
		67	THC	263.5	263.5	263.5	251.6	251.6	251.6	238.7	238.7	238.7	224.6	224.6	224.6	209.2	209.2	210.8
			SHC	156.4	194.4	232.4	151.5	189.6	227.6	146.3	184.4	222.4	140.6	178.7	216.9	134.5	172.6	210.8
		72	THC	284.4	284.4	284.4	271.3	271.3	271.3	257.3	257.3	257.3	242.0	242.0	242.0	225.4	225.4	225.4
			SHC	115.9	153.0	190.2	110.9	148.3	185.7	105.8	143.3	180.9	100.2	137.9	175.6	94.2	132.0	169.9
		76	THC	—	302.5	302.5	—	288.4	288.4	—	273.4	273.4	—	256.8	256.8	—	—	—
			SHC	—	120.4	153.1	—	116.0	150.4	—	111.3	146.9	—	106.0	142.5	—	—	—
9000 cfm	EA (wb)	58	THC	248.2	248.2	279.1	238.7	238.7	268.5	228.3	228.3	256.8	216.8	216.8	244.0	204.1	204.1	229.7
			SHC	217.4	248.2	279.1	209.0	238.7	268.5	199.8	228.3	256.8	189.7	216.8	244.0	178.5	204.1	229.7
		62	THC	249.3	249.3	285.8	238.9	238.9	277.7	228.3	228.3	266.5	216.8	216.8	253.2	204.1	204.1	238.4
			SHC	204.9	245.4	285.8	198.4	238.0	277.7	190.1	228.3	266.5	180.4	216.8	253.2	169.8	204.1	238.4
		67	THC	267.7	267.7	267.7	255.5	255.5	255.5	242.2	242.2	242.2	227.7	227.7	232.0	212.0	212.0	225.6
			SHC	163.4	205.6	247.7	158.4	200.6	242.9	153.1	195.3	237.6	147.3	189.7	232.0	141.1	183.4	225.6
		72	THC	288.5	288.5	288.5	275.2	275.2	275.2	260.8	260.8	260.8	245.1	245.1	245.1	228.1	228.1	228.1
			SHC	118.4	159.9	201.4	113.5	155.2	196.8	108.3	150.1	191.9	102.7	144.6	186.5	96.6	138.7	180.7
		76	THC	—	306.6	306.6	—	292.3	292.3	—	276.7	276.7	—	—	—	—	—	—
			SHC	—	124.2	162.9	—	119.7	159.4	—	114.8	155.2	—	—	—	—	—	—
10,000 cfm	EA (wb)	58	THC	254.7	254.7	286.5	244.7	244.7	275.3	233.9	233.9	263.2	221.9	221.9	249.8	208.7	208.7	234.9
			SHC	222.9	254.7	286.5	214.1	244.7	275.3	204.6	233.9	263.2	194.0	221.9	249.8	182.5	208.7	234.9
		62	THC	254.6	254.6	297.3	244.8	244.8	285.3	233.9	233.9	273.1	221.9	221.9	259.2	208.6	208.6	243.8
			SHC	212.0	254.6	297.3	203.4	244.4	285.3	194.6	233.9	273.1	184.5	221.9	259.2	173.4	208.6	243.8
		67	THC	271.3	271.3	271.3	258.7	258.7	258.7	245.1	245.1	252.3	230.3	230.3	246.7	214.0	214.0	239.7
			SHC	170.0	216.4	262.7	165.0	211.4	257.7	159.6	206.0	252.3	153.9	200.3	246.7	147.3	193.5	239.7
		72	THC	292.0	292.0	292.0	278.4	278.4	278.4	263.7	263.7	263.7	247.4	247.4	247.4	230.0	230.0	230.0
			SHC	120.9	166.6	212.3	116.0	161.8	207.6	110.7	156.7	202.6	105.0	151.0	197.1	98.9	145.1	191.2
		76	THC	—	310.1	310.1	—	295.3	295.3	—	—	—	—	—	—	—	—	—
			SHC	—	127.8	171.4	—	123.2	167.5	—	—	—	—	—	—	—	—	—

LEGEND

db — dry bulb
EA — Entering Air (F)
SHC — Sensible Heat Capacity (1000 Btuh) gross
THC — Total Capacity (1000 Btuh) gross
wb — wet bulb

38AUZ25/40RUA28 COMBINATION RATINGS — 60 Hz

				Ambient Temperature (F)														
				85			95			105			115			125		
				EA (db)			EA (db)			EA (db)			EA (db)			EA (db)		
				75	80	85	75	80	85	75	80	85	75	80	85	75	80	85
7500 Cfm	EA (wb)	58	THC	236.2	236.2	266.2	228.0	228.0	256.9	219.0	219.0	246.7	209.0	209.0	235.5	198.1	198.1	223.2
			SHC	206.3	236.2	266.2	199.0	228.0	256.9	191.2	219.0	246.7	182.5	209.0	235.5	172.9	198.1	223.2
		62	THC	241.6	241.6	264.9	231.6	231.6	259.3	220.9	220.9	252.9	209.4	209.4	244.9	198.2	198.2	231.8
			SHC	191.3	228.1	264.9	186.2	222.8	259.3	180.6	216.7	252.9	173.9	209.4	244.9	164.7	198.2	231.8
		67	THC	262.3	262.3	262.3	251.0	251.0	251.0	238.9	238.9	238.9	225.7	225.7	225.7	211.4	211.4	211.4
			SHC	154.6	192.0	229.4	149.9	187.3	224.6	145.0	182.3	219.6	139.6	176.9	214.2	133.9	171.1	208.4
		72	THC	284.6	284.6	284.6	272.4	272.4	272.4	259.2	259.2	259.2	244.7	244.7	244.7	229.2	229.2	229.2
			SHC	116.2	153.9	191.6	111.6	149.3	186.9	106.8	144.3	181.9	101.5	139.0	176.4	95.9	133.3	170.7
		76	THC	—	303.1	303.1	—	289.9	289.9	—	275.8	275.8	—	260.4	260.4	—	—	—
			SHC	—	123.4	162.7	—	118.8	157.9	—	114.0	152.8	—	108.7	147.3	—	—	—
8750 Cfm	EA (wb)	58	THC	247.1	247.1	278.5	238.2	238.2	268.4	228.5	228.5	257.5	217.8	217.8	245.4	206.1	206.1	232.2
			SHC	215.7	247.1	278.5	208.0	238.2	268.4	199.5	228.5	257.5	190.2	217.8	245.4	179.9	206.1	232.2
		62	THC	248.7	248.7	286.9	238.6	238.6	279.1	228.7	228.7	267.4	218.0	218.0	254.9	206.2	206.2	241.2
			SHC	204.5	245.7	286.9	198.2	238.6	279.1	189.9	228.7	267.4	181.1	218.0	254.9	171.3	206.2	241.2
		67	THC	268.2	268.2	268.2	256.5	256.5	256.5	243.9	243.9	243.9	230.1	230.1	234.0	215.3	215.3	227.8
			SHC	164.0	206.9	249.7	159.3	202.1	244.9	154.2	197.0	239.7	148.7	191.4	234.0	142.8	185.3	227.8
		72	THC	290.8	290.8	290.8	277.9	277.9	277.9	264.2	264.2	264.2	249.2	249.2	249.2	233.1	233.1	233.1
			SHC	120.1	163.2	206.3	115.4	158.5	201.5	110.5	153.4	196.4	105.1	148.0	190.9	99.4	142.2	184.9
		76	THC	—	309.2	309.2	—	295.5	295.5	—	280.8	280.8	—	—	—	—	—	—
			SHC	—	128.3	172.8	—	123.7	168.0	—	118.7	162.8	—	—	—	—	—	—
10000 Cfm	EA (wb)	58	THC	255.9	255.9	288.4	246.5	246.5	277.8	236.2	236.2	266.1	224.9	224.9	253.4	212.5	212.5	239.4
			SHC	223.5	255.9	288.4	215.2	246.5	277.8	206.2	236.2	266.1	196.3	224.9	253.4	185.5	212.5	239.4
		62	THC	256.1	256.1	299.5	246.7	246.7	288.4	236.3	236.3	276.4	225.0	225.0	263.1	212.6	212.6	248.6
			SHC	212.7	256.1	299.5	204.9	246.7	288.4	196.3	236.3	276.4	186.9	225.0	263.1	176.6	212.6	248.6
		67	THC	272.9	272.9	272.9	260.7	260.7	264.2	247.7	247.7	258.7	233.6	233.6	252.6	218.5	218.5	245.9
			SHC	173.0	221.1	269.2	168.1	216.1	264.2	162.9	210.8	258.7	157.2	204.9	252.6	151.1	198.5	245.9
		72	THC	295.5	295.5	295.5	282.2	282.2	282.2	268.1	268.1	268.1	252.7	252.7	252.7	236.1	236.1	236.1
			SHC	123.7	172.1	220.4	119.0	167.3	215.5	114.0	162.2	210.3	108.6	156.6	204.7	102.8	150.7	198.6
		76	THC	—	314.0	314.0	—	299.8	299.8	—	—	—	—	—	—	—	—	—
			SHC	—	133.0	182.6	—	128.2	177.7	—	—	—	—	—	—	—	—	—
11250 Cfm	EA (wb)	58	THC	263.3	263.3	296.8	253.4	253.4	285.5	242.6	242.6	273.4	230.7	230.7	260.0	217.7	217.7	245.4
			SHC	229.9	263.3	296.8	221.2	253.4	285.5	211.8	242.6	273.4	201.5	230.7	260.0	190.1	217.7	245.4
		62	THC	263.5	263.5	308.1	253.6	253.6	296.5	242.8	242.8	283.9	230.9	230.9	270.0	217.9	217.9	254.8
			SHC	218.9	263.5	308.1	210.6	253.6	296.5	201.7	242.8	283.9	191.8	230.9	270.0	181.0	217.9	254.8
		67	THC	276.6	276.6	287.7	264.2	264.2	282.3	250.9	250.9	276.5	236.5	236.5	269.8	221.3	221.3	262.1
			SHC	181.4	234.6	287.7	176.4	229.4	282.3	171.1	223.8	276.5	165.2	217.5	269.8	158.6	210.3	262.1
		72	THC	299.3	299.3	299.3	285.7	285.7	285.7	271.2	271.2	271.2	255.4	255.4	255.4	238.5	238.5	238.5
			SHC	127.2	180.6	234.1	122.4	175.7	229.1	117.3	170.6	223.8	111.9	165.0	218.0	106.1	159.0	211.9
		76	THC	—	—	—	—	—	—	—	—	—	—	—	—	—	—	—
			SHC	—	—	—	—	—	—	—	—	—	—	—	—	—	—	—
12500 Cfm	EA (wb)	58	THC	269.7	269.7	303.9	259.3	259.3	292.2	248.1	248.1	279.5	235.7	235.7	265.6	222.2	222.2	250.4
			SHC	235.5	269.7	303.9	226.4	259.3	292.2	216.6	248.1	279.5	205.8	235.7	265.6	194.1	222.2	250.4
		62	THC	269.8	269.8	315.5	259.4	259.4	303.4	248.2	248.2	290.2	235.8	235.8	275.7	222.4	222.4	260.0
			SHC	224.2	269.8	315.5	215.5	259.4	303.4	206.2	248.2	290.2	195.9	235.8	275.7	184.7	222.4	260.0
		67	THC	279.8	279.8	305.1	267.1	267.1	299.3	253.7	253.7	292.8	239.2	239.2	285.1	223.8	223.8	275.5
			SHC	189.4	247.2	305.1	184.3	241.8	299.3	178.6	235.7	292.8	172.3	228.7	285.1	164.9	220.2	275.5
		72	THC	302.4	302.4	302.4	288.5	288.5	288.5	273.7	273.7	273.7	257.7	257.7	257.7	240.4	240.4	240.4
			SHC	130.5	188.9	247.3	125.7	184.0	242.3	120.6	178.7	236.9	115.1	173.1	231.0	109.2	167.0	224.7
		76	THC	—	—	—	—	—	—	—	—	—	—	—	—	—	—	—
			SHC	—	—	—	—	—	—	—	—	—	—	—	—	—	—	—

LEGEND

db — dry bulb
EA — Entering Air (F)
SHC — Sensible Heat Capacity (1000 Btuh) gross
THC — Total Capacity (1000 Btuh) gross
wb — wet bulb

38AUD25/40RUA25 COMBINATION RATINGS — 60 Hz

				Ambient Temperature (F)														
				85			95			105			115			125		
				EA (db)			EA (db)			EA (db)			EA (db)			EA (db)		
				75	80	85	75	80	85	75	80	85	75	80	85	75	80	85
6000 cfm	EA (wb)	58	THC	220.0	220.0	247.0	212.1	212.1	238.2	203.4	203.4	228.5	193.7	193.7	217.7	182.8	182.8	205.5
			SHC	193.0	220.0	247.0	186.0	212.1	238.2	178.3	203.4	228.5	169.8	193.7	217.7	160.1	182.8	205.5
		62	THC	230.1	230.1	234.9	220.0	220.0	230.0	209.0	209.0	224.6	197.0	197.0	218.3	183.9	183.9	210.5
			SHC	174.4	204.7	234.9	169.6	199.8	230.0	164.2	194.4	224.6	158.2	188.3	218.3	151.2	180.8	210.5
		67	THC	251.0	251.0	251.0	239.9	239.9	239.9	227.9	227.9	227.9	214.6	214.6	214.6	199.9	199.9	199.9
			SHC	142.4	172.3	202.2	137.6	167.6	197.6	132.5	162.6	192.7	126.9	157.1	187.3	120.9	151.1	181.3
		72	THC	274.2	274.2	274.2	262.0	262.0	262.0	248.7	248.7	248.7	234.1	234.1	234.1	217.9	217.9	217.9
			SHC	111.3	140.1	168.9	106.4	135.5	164.6	101.2	130.6	160.0	95.6	125.2	154.8	89.5	119.3	149.1
		76	THC	—	294.4	294.4	—	281	281.0	—	266.4	266.4	—	250.7	250.7	—	233.4	233.4
			SHC	—	113.0	146.0	—	108.7	141.7	—	104.6	133.3	—	99.7	126.2	—	94.1	122.4
7000 cfm	EA (wb)	58	THC	230.8	230.8	259.3	222.2	222.2	249.7	212.8	212.8	239.2	202.3	202.3	227.5	190.6	190.6	214.4
			SHC	202.3	230.8	259.3	194.7	222.2	249.7	186.4	212.8	239.2	177.2	202.3	227.5	166.9	190.6	214.4
		62	THC	236.4	236.4	255.9	225.9	225.9	250.3	215.3	215.3	241.3	203.8	203.8	231.2	191.3	191.3	220.8
			SHC	186.6	221.3	255.9	181.4	215.8	250.3	174.2	207.7	241.3	166.3	198.7	231.2	158.0	189.4	220.8
		67	THC	257.6	257.6	257.6	245.9	245.9	245.9	233.2	233.2	233.2	219.3	219.3	219.3	204.0	204.0	204.0
			SHC	150.4	185.0	219.6	145.5	180.2	214.9	140.3	175.0	209.8	134.6	169.4	204.2	128.4	163.2	198.1
		72	THC	281.0	281.0	281.0	268.1	268.1	268.1	254.2	254.2	254.2	238.8	238.8	238.8	222.0	222.0	222.0
			SHC	114.4	148.1	181.8	109.5	143.4	177.3	104.2	138.4	172.5	98.5	132.8	167.2	92.3	126.8	161.3
		76	THC	—	301.1	301.1	—	287.2	287.2	—	272.2	272.2	—	255.7	255.7	—	—	—
			SHC	—	118.2	151.3	—	113.9	143.1	—	109.2	140.7	—	104.0	136.6	—	—	—
8,000 cfm	EA (wb)	58	THC	239.6	239.6	269.4	230.5	230.5	259.2	220.5	220.5	248.0	209.4	209.4	235.6	197	197.0	221.7
			SHC	209.9	239.6	269.4	201.8	230.5	259.2	193.0	220.5	248.0	183.3	209.4	235.6	172.3	197.0	221.7
		62	THC	241.9	241.9	274.0	232.2	232.2	263.9	222.0	222.0	253.2	210.1	210.1	242.3	197.0	197.0	230.1
			SHC	197.3	235.6	274.0	189.6	226.8	263.9	181.7	217.5	253.2	173.3	207.8	242.3	163.9	197.0	230.1
		67	THC	262.7	262.7	262.7	250.5	250.5	250.5	237.3	237.3	237.3	222.9	222.9	222.9	207.1	207.1	214.0
			SHC	158.0	197.1	236.3	153.0	192.2	231.4	147.6	186.9	226.1	141.8	181.1	220.3	135.5	174.7	214.0
		72	THC	286.3	286.3	286.3	272.8	272.8	272.8	258.4	258.4	258.4	242.5	242.5	242.5	225.1	225.1	225.1
			SHC	117.4	155.7	194.1	112.4	150.9	189.5	107.1	145.8	184.5	101.3	140.1	179.0	95.1	134.0	173.0
		76	THC	—	306.6	306.6	—	292.0	292.0	—	276.5	276.5	—	—	—	—	—	—
			SHC	—	122.8	157.5	—	118.2	154.2	—	113.3	150.2	—	—	—	—	—	—
9,000 cfm	EA (wb)	58	THC	247.2	247.2	278.0	237.6	237.6	267.3	227.1	227.1	255.5	215.4	215.4	242.4	202.4	202.4	227.8
			SHC	216.4	247.2	278.0	207.9	237.6	267.3	198.7	227.1	255.5	188.4	215.4	242.4	176.9	202.4	227.8
		62	THC	249.4	249.4	281.3	239.3	239.3	272.2	227.9	227.9	262.4	215.4	215.4	251.6	202.3	202.3	236.4
			SHC	202.5	241.9	281.3	195.4	233.8	272.2	187.7	225.1	262.4	179.2	215.4	251.6	168.3	202.3	236.4
		67	THC	266.8	266.8	266.8	254.2	254.2	254.2	240.6	240.6	241.9	225.9	225.9	235.9	209.5	209.5	229.3
			SHC	165.2	208.8	252.4	160.1	203.8	247.4	154.7	198.3	241.9	148.7	192.3	235.9	142.2	185.7	229.3
		72	THC	290.4	290.4	290.4	276.6	276.6	276.6	261.8	261.8	261.8	245.4	245.4	245.4	227.6	227.6	227.6
			SHC	120.1	163.0	205.9	115.1	158.2	201.2	109.8	152.9	196.1	103.9	147.2	190.5	97.6	141.0	184.4
		76	THC	—	310.7	310.7	—	295.9	295.9	—	—	—	—	—	—	—	—	—
			SHC	—	126.7	167.1	—	122.1	163.2	—	—	—	—	—	—	—	—	—
10,000 cfm	EA (wb)	58	THC	253.7	253.7	285.4	243.7	243.7	274.2	232.7	232.7	261.9	220.5	220.5	248.2	206.9	206.9	233.0
			SHC	221.9	253.7	285.4	213.1	243.7	274.2	203.5	232.7	261.9	192.7	220.5	248.2	180.8	206.9	233.0
		62	THC	255.5	255.5	290.4	244.0	244.0	282.1	232.6	232.6	271.8	220.5	220.5	257.6	206.9	206.9	241.9
			SHC	208.4	249.4	290.4	201.5	241.8	282.1	193.5	232.6	271.8	183.3	220.5	257.6	171.9	206.9	241.9
		67	THC	270.1	270.1	270.1	257.2	257.2	262.7	243.3	243.3	257.0	228.0	228.0	250.8	211.4	211.4	243.3
			SHC	172.1	220.0	267.8	166.9	214.8	262.7	161.4	209.2	257.0	155.2	203.0	250.8	148.3	195.8	243.3
		72	THC	293.9	293.9	293.9	279.7	279.7	279.7	264.4	264.4	264.4	247.8	247.8	247.8	229.6	229.6	229.6
			SHC	122.8	170.1	217.4	117.7	165.1	212.5	112.3	159.8	207.3	106.4	154.0	201.6	100.1	147.8	195.4
		76	THC	—	314.3	314.3	—	299.1	299.1	—	—	—	—	—	—	—	—	—
			SHC	—	130.6	175.9	—	125.8	171.7	—	—	—	—	—	—	—	—	—

LEGEND

db — dry bulb
EA — Entering Air (F)
SHC — Sensible Heat Capacity (1000 Btuh) gross
THC — Total Capacity (1000 Btuh) gross
wb — wet bulb

38AUD25/40RUA28 COMBINATION RATINGS — 60 Hz

				Ambient Temperature (F)														
				85			95			105			115			125		
				EA (db)			EA (db)			EA (db)			EA (db)			EA (db)		
				75	80	85	75	80	85	75	80	85	75	80	85	75	80	85
7500 Cfm	EA (wb)	58	THC	237.5	237.5	261.6	228.5	228.5	251.7	218.7	218.7	240.9	207.7	207.7	228.8	195.9	195.9	215.8
			SHC	213.4	237.5	261.6	205.3	228.5	251.7	196.5	218.7	240.9	186.6	207.7	228.8	176.0	195.9	215.8
		62	THC	241.6	241.6	261.6	230.8	230.8	255.7	220.1	220.1	246.2	207.9	207.9	236.1	196.1	196.1	222.6
			SHC	201.2	231.4	261.6	195.7	225.7	255.7	188.0	217.1	246.2	179.8	207.9	236.1	169.5	196.1	222.6
		67	THC	262.2	262.2	262.2	250.1	250.1	250.1	237.0	237.0	237.0	222.5	222.5	222.5	207.4	207.4	207.4
			SHC	163.9	194.6	225.3	158.9	189.6	220.3	153.6	184.2	214.9	147.7	178.3	208.9	141.6	172.2	202.7
		72	THC	285.5	285.5	285.5	272.2	272.2	272.2	257.9	257.9	257.9	242.1	242.1	242.1	225.6	225.6	225.6
			SHC	125.1	156.0	186.9	120.2	151.0	181.9	114.9	145.7	176.5	109.2	139.9	170.6	103.2	133.8	164.5
		76	THC	—	305.5	305.5	—	291.1	291.1	—	—	—	—	—	—	—	—	—
			SHC	—	124.9	156.9	—	120.0	151.8	—	—	—	—	—	—	—	—	—
8750 Cfm	EA (wb)	58	THC	248.0	248.0	273.2	238.3	238.3	262.5	227.7	227.7	250.8	215.9	215.9	237.8	203.3	203.3	223.9
			SHC	222.8	248.0	273.2	214.1	238.3	262.5	204.6	227.7	250.8	194.0	215.9	237.8	182.6	203.3	223.9
		62	THC	249.2	249.2	280.0	238.6	238.6	270.9	227.9	227.9	258.8	216.1	216.1	245.4	203.4	203.4	231.0
			SHC	213.6	246.8	280.0	206.3	238.6	270.9	197.0	227.9	258.8	186.8	216.1	245.4	175.8	203.4	231.0
		67	THC	267.7	267.7	267.7	254.9	254.9	254.9	241.2	241.2	241.2	226.3	226.3	228.3	210.6	210.6	221.6
			SHC	174.8	210.1	245.4	169.7	204.9	240.2	164.2	199.3	234.5	158.2	193.2	228.3	151.8	186.7	221.6
		72	THC	291.3	291.3	291.3	277.3	277.3	277.3	262.4	262.4	262.4	246.1	246.1	246.1	228.9	228.9	228.9
			SHC	130.3	165.7	201.2	125.2	160.6	196.0	119.9	155.2	190.5	114.0	149.2	184.4	108.0	143.1	178.1
		76	THC	—	311.4	311.4	—	—	—	—	—	—	—	—	—	—	—	—
			SHC	—	130.1	166.5	—	—	—	—	—	—	—	—	—	—	—	—
10000 Cfm	EA (wb)	58	THC	256.5	256.5	282.5	246.1	246.1	271.1	234.9	234.9	258.8	222.4	222.4	245.0	209.1	209.1	230.4
			SHC	230.4	256.5	282.5	221.2	246.1	271.1	211.1	234.9	258.8	199.9	222.4	245.0	187.9	209.1	230.4
		62	THC	256.7	256.7	291.5	246.3	246.3	279.7	235.1	235.1	267.0	222.6	222.6	252.8	209.3	209.3	237.6
			SHC	221.9	256.7	291.5	213.0	246.3	279.7	203.2	235.1	267.0	192.4	222.6	252.8	180.9	209.3	237.6
		67	THC	271.7	271.7	271.7	258.6	258.6	259.0	244.6	244.6	253.0	229.2	229.2	246.3	213.3	213.3	238.9
			SHC	185.1	224.9	264.6	179.8	219.4	259.0	174.1	213.6	253.0	167.8	207.1	246.3	161.1	200.0	238.9
		72	THC	295.6	295.6	295.6	281.2	281.2	281.2	265.8	265.8	265.8	249.0	249.0	249.0	—	—	—
			SHC	135.2	175.0	214.9	130.0	169.8	209.6	124.6	164.2	203.9	118.6	158.2	197.7	—	—	—
		76	THC	—	—	—	—	—	—	—	—	—	—	—	—	—	—	—
			SHC	—	—	—	—	—	—	—	—	—	—	—	—	—	—	—
11250 Cfm	EA (wb)	58	THC	263.5	263.5	290.3	252.7	252.7	278.3	240.9	240.9	265.3	227.9	227.9	251.0	214.0	214.0	235.7
			SHC	236.8	263.5	290.3	227.0	252.7	278.3	216.4	240.9	265.3	204.7	227.9	251.0	192.2	214.0	235.7
		62	THC	263.7	263.7	299.5	252.9	252.9	287.1	241.1	241.1	273.7	228.0	228.0	258.9	214.1	214.1	243.1
			SHC	228.0	263.7	299.5	218.6	252.9	287.1	208.4	241.1	273.7	197.1	228.0	258.9	185.1	214.1	243.1
		67	THC	275.0	275.0	282.7	261.6	261.6	276.8	247.2	247.2	270.3	231.8	231.8	262.6	216.0	216.0	251.8
			SHC	194.9	238.8	282.7	189.4	233.1	276.8	183.4	226.8	270.3	176.6	219.6	262.6	168.2	210.0	251.8
		72	THC	299.0	299.0	299.0	284.2	284.2	284.2	268.4	268.4	268.4	251.3	251.3	251.3	—	—	—
			SHC	139.8	184.0	228.1	134.6	178.7	222.7	129.0	173.0	216.9	123.1	166.8	210.6	—	—	—
		76	THC	—	—	—	—	—	—	—	—	—	—	—	—	—	—	—
			SHC	—	—	—	—	—	—	—	—	—	—	—	—	—	—	—
12500 Cfm	EA (wb)	58	THC	269.5	269.5	296.9	258.2	258.2	284.4	245.9	245.9	270.9	232.4	232.4	256.0	218.0	218.0	240.1
			SHC	242.2	269.5	296.9	232.0	258.2	284.4	221.0	245.9	270.9	208.8	232.4	256.0	195.9	218.0	240.1
		62	THC	269.7	269.7	306.3	258.4	258.4	293.4	246.1	246.1	279.4	232.5	232.5	264.0	218.1	218.1	247.6
			SHC	233.2	269.7	306.3	223.4	258.4	293.4	212.8	246.1	279.4	201.0	232.5	264.0	188.6	218.1	247.6
		67	THC	277.8	277.8	299.7	264.1	264.1	293.2	249.7	249.7	285.6	234.5	234.5	274.3	218.8	218.8	261.2
			SHC	204.0	251.8	299.7	198.2	245.7	293.2	191.6	238.6	285.6	183.1	228.7	274.3	173.4	217.3	261.2
		72	THC	301.7	301.7	301.7	286.6	286.6	286.6	270.5	270.5	270.5	—	—	—	—	—	—
			SHC	144.3	192.6	241.0	139.0	187.2	235.5	133.4	181.5	229.6	—	—	—	—	—	—
		76	THC	—	—	—	—	—	—	—	—	—	—	—	—	—	—	—
			SHC	—	—	—	—	—	—	—	—	—	—	—	—	—	—	—

LEGEND

db — dry bulb
EA — Entering Air (F)
SHC — Sensible Heat Capacity (1000 Btuh) gross
THC — Total Capacity (1000 Btuh) gross
wb — wet bulb

Electrical data

38AUZ 07-14 COOLING WITHOUT POWERED CONVENIENCE OUTLET

UNIT SIZE	TWO STAGE COOLING	V-Ph-Hz	VOLTAGE RANGE		COMPRESSOR NO. 1		OFM		POWER SUPPLY		DISCONNECT SIZE	
			Min	Max	RLA	LRA	Qty	FLA (ea)	MCA	Fuse or HACR Breaker	FLA	LRA
07	YES	575-3-60	518	633	6.3	55	2	0.7	10	15	9	59
		208/230-3-60	187	253	17.5	136	2	1.5	25/25	30/30	24/24	142/142
		460-3-60	414	506	8.4	66	2	0.8	13	20	12	70
	NO	575-3-60	518	633	6.6	55	2	0.7	10	15	9	59
		208/230-3-60	187	253	19.6	136	2	1.5	28/28	45/45	26/26	142/142
		460-3-60	414	506	8.2	66	2	0.8	12	20	11	70
08	YES	575-3-60	518	633	9.9	78	2	0.7	14	20	13	82
		208/230-3-60	187	253	26.8	164	2	1.5	37/37	60/60	34/34	170/170
		460-3-60	414	506	12.6	100	2	0.8	18	25	16	104
	NO	575-3-60	518	633	9.0	78	2	0.7	13	20	12	82
		208/230-3-60	187	253	25.0	164	2	1.5	35/35	50/50	32/32	170/170
		460-3-60	414	506	12.2	100	2	0.8	17	25	16	104
12	NO	575-3-60	518	633	11.3	94	2	0.7	16	25	15	98
		208/230-3-60	187	253	28.2	239	2	1.5	39/39	60/60	36/36	245/245
		460-3-60	414	506	14.7	130	2	0.8	20	30	19	134
14	NO	575-3-60	518	633	14.7	100	2	0.7	20	30	19	104
		208/230-3-60	187	253	48.1	245	2	1.5	64/64	80/80	59/59	251/251
		460-3-60	414	506	18.6	125	2	0.8	25	30	23	129

38AUZ 07-14 WITH POWERED CONVENIENCE OUTLET

UNIT SIZE	TWO STAGE COOLING	NOMINAL POWER SUPPLY	VOLTAGE RANGE		COMPRESSOR NO. 1		OFM		POWER SUPPLY		DISCONNECT SIZE	
		Volts	Min	Max	RLA	LRA	Qty	FLA (ea)	MCA	Fuse or HACR Breaker	FLA	LRA
07	YES	575-3-60	518	633	6.3	55	2	0.7	11	15	11	61
		208/230-3-60	187	253	17.5	136	2	1.5	30/30	45/45	29/29	147/147
		460-3-60	414	506	8.4	66	2	0.8	15	20	14	72
	NO	575-3-60	518	633	6.6	55	2	0.7	12	15	11	61
		208/230-3-60	187	253	19.6	136	2	1.5	33/33	50/50	32/32	147/147
		460-3-60	414	506	8.2	66	2	0.8	15	20	14	72
08	YES	575-3-60	518	633	9.9	78	2	0.7	16	25	15	84
		208/230-3-60	187	253	26.8	164	2	1.5	42/42	60/60	40/40	175/175
		460-3-60	414	506	12.6	100	2	0.8	20	30	19	106
	NO	575-3-60	518	633	9.0	78	2	0.7	15	20	14	84
		208/230-3-60	187	253	25.0	164	2	1.5	40/40	60/60	38/38	175/175
		460-3-60	414	506	12.2	100	2	0.8	20	30	18	106
12	NO	575-3-60	518	633	11.3	94	2	0.7	18	25	17	100
		208/230-3-60	187	253	28.2	239	2	1.5	44/44	60/60	41/41	250/250
		460-3-60	414	506	14.7	130	2	0.8	23	30	21	136
14	NO	575-3-60	518	633	14.7	100	2	0.7	22	30	20	106
		208/230-3-60	187	253	48.1	245	2	1.5	68/68	80/80	64/64	256/256
		460-3-60	414	506	18.6	125	2	0.8	28	45	26	131

LEGEND

FLA — Full Load Amps
LRA — Locked Rotor Amps
OFM — Outdoor Fan Motor

38AUZ 16, 25 WITHOUT POWERED CONVENIENCE OUTLET

UNIT SIZE	NOMINAL POWER SUPPLY	VOLTAGE RANGE		COMPRESSOR No. 1		COMPRESSOR No. 2		OFM		POWER SUPPLY		DISCONNECT SIZE	
	Volts	Min	Max	RLA	LRA	RLA	LRA	Qty	FLA (ea)	MCA	Fuse or HACR Brkr	FLA	LRA
16	208/230-3-60	187	253	25.0	164	25.0	164	3	1.5	60.8/ 60.8	80/80	63/63	337/337
	460-3-60	414	506	12.2	100	12.2	100	3	0.8	29.9	40	31	206
	575-3-60	518	633	9.0	78	9.0	78	3	0.7	22.4	30	23	162
25	208/230-3-60	187	253	30.1	225	30.1	225	4	1.5	73.7/ 73.7	100/100	76/76	462/462
	460-3-60	414	506	16.7	114	16.7	114	4	0.8	40.8	50	42	236
	575-3-60	518	633	12.2	80	12.2	80	4	0.7	30.3	40	31	168

38AUZ 16, 25 WITH POWERED CONVENIENCE OUTLET

UNIT SIZE	NOMINAL POWER SUPPLY	VOLTAGE RANGE		COMPRESSOR No. 1		COMPRESSOR No. 2		OFM		POWER SUPPLY		DISCONNECT SIZE	
	Volts	Min	Max	RLA	LRA	RLA	LRA	Qty	FLA (ea)	MCA	Fuse or HACR Brkr	FLA	LRA
16	208/230-3-60	187	253	25.0	164	25.0	164	3	1.5	65.6/ 65.6	90/90	68/68	342/342
	460-3-60	414	506	12.2	100	12.2	100	3	0.8	32.1	40	33	208
	575-3-60	518	633	9.0	78	9.0	78	3	0.7	24.1	30	25	164
25	208/230-3-60	187	253	30.1	225	30.1	225	4	1.5	78.5/ 78.5	100/100	82/82	467/467
	460-3-60	414	506	16.7	114	16.7	114	4	0.8	43	50	45	238
	575-3-60	518	633	12.2	80	12.2	80	4	0.7	32	40	33	170

38AUD 12, 14, COOLING WITHOUT POWERED CONVENIENCE OUTLET

UNIT SIZE	NOMINAL POWER SUPPLY	VOLTAGE RANGE		COMPRESSOR No. 1		COMPRESSOR No. 2		OFM		POWER SUPPLY		DISCONNECT SIZE	
	Volts	Min	Max	RLA	LRA	RLA	LRA	Qty	FLA (ea)	MCA	Fuse or HACR Brkr	FLA	LRA
12	575	518	633	5.7	39	5.7	39	2	0.7	15	20	15	82
	208/230-3-60	187	253	15.9	110	15.9	110	2	1.5	39/39	50/50	40/40	226/226
	460-3-60	414	506	7.7	52	7.7	52	2	0.8	19	25	20	108
14	575-3-60	518	633	7.7	54	7.7	54	2	0.7	19	25	19	112
	208/230-3-60	187	253	22.4	149	22.4	149	2	1.5	54/54	60/60	55/55	304/304
	460-3-60	414	506	10.6	75	10.6	75	2	0.8	26	30	26	154

38AUD 12, 14, COOLING WITH POWERED CONVENIENCE OUTLET

UNIT SIZE	NOMINAL POWER SUPPLY	VOLTAGE RANGE		COMPRESSOR No. 1		COMPRESSOR No. 2		OFM		POWER SUPPLY		DISCONNECT SIZE	
	Volts	Min	Max	RLA	LRA	RLA	LRA	Qty	FLA (ea)	MCA	Fuse or HACR Brkr	FLA	LRA
12	575-3-60	518	633	5.7	39	5.7	39	2	0.7	16	20	17	84
	208/230-3-60	187	253	15.9	110	15.9	110	2	1.5	44/44	50/50	46/46	231/231
	460-3-60	414	506	7.7	52	7.7	52	2	0.8	22	25	22	110
14	575-3-60	518	633	7.7	54	7.7	54	2	0.7	21	25	21	114
	208/230-3-60	187	253	22.4	149	22.4	149	2	1.5	59/59	80/80	60/60	309/309
	460-3-60	414	506	10.6	75	10.6	75	2	0.8	28	35	29	156

LEGEND

HACR — Heating, Air Conditioning and Refrigeration
FLA — Full Load Amps
LRA — Locked Rotor Amps
MCA — Minimum Circuit Amps
OFM — Outdoor Fan Motor
RLA — Rated Load Amps

Electrical data (cont)

38AUD 16, 25, COOLING WITHOUT POWERED CONVENIENCE OUTLET

UNIT SIZE	NOMINAL POWER SUPPLY	VOLTAGE RANGE		COMPRESSOR No. 1		COMPRESSOR No. 2		OFM		POWER SUPPLY		DISCONNECT SIZE	
	V-Ph-Hz	Min	Max	RLA	LRA	RLA	LRA	Qty	FLA (ea)	MCA	Fuse or HACR Brkr	FLA	LRA
16	208/230-3-60	187	253	25.0	164	25.0	164	3	1.5	60.8/60.8	80/80	63/63	337/337
	460-3-60	414	506	12.2	100	12.2	100	3	0.8	29.9	40	31	206
	575-3-60	518	633	9.0	78	9.0	78	3	0.7	22.4	30	23	162
25	208/230-3-60	187	253	30.1	225	30.1	225	4	1.5	73.7/73.7	100/100	76/76	462/462
	460-3-60	414	506	16.7	114	16.7	114	4	0.8	40.8	50	42	236
	575-3-60	518	633	12.2	80	12.2	80	4	0.7	30.3	40	31	168

38AUD 16, 25 COOLING WITH POWERED CONVENIENCE OUTLET

UNIT SIZE	NOMINAL POWER SUPPLY	VOLTAGE RANGE		COMPRESSOR No. 1		COMPRESSOR No. 2		OFM		POWER SUPPLY		DISCONNECT SIZE	
	V-Ph-Hz	Min	Max	RLA	LRA	RLA	LRA	Qty	FLA (ea)	MCA	Fuse or HACR Brkr	FLA	LRA
16	208/230-3-60	187	253	25.0	164	25.0	164	3	1.5	65.6/65.6	90/90	68/68	342/342
	460-3-60	414	506	12.2	100	12.2	100	3	0.8	32.1	40	33	208
	575-3-60	518	633	9.0	78	9.0	78	3	0.7	24.1	30	25	164
25	208/230-3-60	187	253	30.1	225	30.1	225	4	1.5	78.5/78.5	100/100	82/82	467/467
	460-3-60	414	506	16.7	114	16.7	114	4	0.8	43	50	45	238
	575-3-60	518	633	12.2	80	12.2	80	4	0.7	32	40	33	170

LEGEND

HACR — Heating, Air Conditioning and Refrigeration
FLA — Full Load Amps
LRA — Locked Rotor Amps
MCA — Minimum Circuit Amps
OFM — Outdoor Fan Motor
RLA — Rated Load Amps

Application data

Operating Limits

Maximum outdoor temperature..... 125°F
Minimum return-air temperature (40RUA)..... 55°F
Maximum return-air temperature (40RUA)..... 95°F
Range of acceptable saturation suction temperature..... 20 to 50°F
Maximum discharge temperature..... 275°F
Minimum discharge superheat..... 60°F

1. Select air handler at no less than 300 cfm/ton (nominal condensing unit capacity).
2. Total combined draw of the field-supplied liquid line solenoid valve and air handler fan contactor must not exceed 22 va. If the specified va must be exceeded, use a remote relay to control the load.

MINIMUM OUTDOOR-AIR OPERATING TEMPERATURE

UNIT 38AU	MAXIMUM OUTDOOR TEMP (°F)	
	Std	With MotorMaster® I Control*
Z07	35	–20
Z08	35	
D12	35	
D14	35	
D16	35	
D25	35	

* Wind baffles (field-supplied and field-installed) are recommended for all units with MotorMaster I control. Refer to Low Ambient Temperature Control Installation Instructions for additional information.

Refrigerant Piping

IMPORTANT: Do not bury refrigerant piping underground.

It is recommended that the refrigerant piping for all commercial split systems include a liquid line solenoid valve, a liquid line filter drier and a sight glass.

For refrigerant lines longer than 75 lineal ft, a liquid line solenoid valve installed at the indoor unit and a suction accumulator are required. Refer to the Refrigerant Specialties Part Numbers table.

REFRIGERANT SPECIALTIES PART NUMBERS

LIQUID LINE SIZE (in.)	LIQUID LINE SOLENOID VALVE (LLSV)	LLSV COIL	SIGHT GLASS
3/8	EF680033	EF680037	KM680008
1/2	EF680035	EF680037	KM680004
5/8	EF680036	EF680037	KM680005

Commercial Air-Cooled Condensing Units

HVAC Guide Specifications

Size Range: **6 to 20 Tons**

Carrier Model Numbers: **38AUZ, Single Circuit (07 - 25 Models) 38AUD, Dual Circuit (12, 14, 16, 25 Models)**

Part 1 — GENERAL

1.01 SYSTEM DESCRIPTION

Outdoor-mounted, air-cooled condensing unit suitable for on-the-ground or rooftop installation. Unit shall consist of a hermetic scroll air-conditioning compressor(s) assembly, an air-cooled coil, propeller-type condenser fans, and a control box. Unit shall discharge supply air upward as shown on contract drawings. Unit shall be used in a refrigeration circuit matched with a packaged air-handling unit.

1.02 QUALITY ASSURANCE

A. Unit shall be rated in accordance with AHRI Standard 340/360.

B. Unit construction shall comply with ANSI/ASHRAE 15 safety code latest revision and comply with NEC.

C. Unit shall be constructed in accordance with UL 1995 standard and shall carry the UL and UL, Canada label.

D. Unit cabinet shall be capable of withstanding 500-hour salt spray exposure per ASTM B117 (scribed specimen).

E. Air-cooled condenser coils for hermetic scroll compressor units 38AUZ and 38AUD shall be leak tested at 150 psig, and pressure tested at 650 psig.

F. Unit shall be manufactured in a facility registered to ISO 9001:2015 manufacturing quality standard.

1.03 DELIVERY, STORAGE, AND HANDLING

Unit shall be shipped as single package only, and shall be stored and handled according to unit manufacturer's recommendations.

1.04 WARRANTY (FOR INCLUSION BY SPECIFYING ENGINEER.)

Part 2 — Products

2.01 EQUIPMENT

A. General:

Factory-assembled, single piece, air-cooled condensing unit. Contained within the unit enclosure shall be all factory wiring, piping, controls, compressor, holding charge, and special features required prior to field start-up.

B. Unit Cabinet:

1. Unit cabinet shall be constructed of galvanized steel, bonderized and coated with a prepainted baked enamel finish.
2. A heavy-gauge roll-formed perimeter base rail with forklift slots and lifting holes shall be provided to facilitate rigging.

C. Condenser Fans:

1. Condenser fans shall be direct driven, propeller type, discharging air vertically upward.
2. Fan blades shall be balanced.
3. Condenser fan discharge openings shall be equipped with PVC-coated steel wire safety guards.
4. Condenser fan and motor shaft shall be corrosion resistant.

D. Compressor:

1. Compressor shall be of the hermetic scroll type.
2. Compressor shall be mounted on rubber grommets.
3. Compressors shall include overload protection.
4. Compressors shall be equipped with a crankcase heater.
5. Compressor shall be equipped with internal high pressure and high temperature protection.

E. Condenser Coils:

1. Standard Aluminum fin - Copper Tube Coils:
   a. Standard evaporator and condenser coils shall have aluminum lanced plate fins mechanically bonded to seamless internally grooved copper tubes with all joints brazed.
   b. Evaporator coils shall be leak tested to 150 psig, pressure tested to 450 psig, and qualified to UL 1995 burst test at 1775 psig.
   c. Condenser coils shall be leak tested to 150 psig, pressure tested to 650 psig, and qualified to UL 1995 burst test at 1980 psig.
2. Optional copper-fin evaporator and condenser coils:
   a. Shall be constructed of copper fins mechanically bonded to copper tubes and copper tube sheets.
   b. Galvanized steel tube sheets shall not be acceptable.
   c. A polymer strip shall prevent coil assembly from contacting the sheet metal coil pan to minimize potential for galvanic corrosion between coil and pan.
3. Optional e-coated aluminum-fin evaporator and condenser coils:
   a. Shall have a flexible epoxy polymer coating uniformly applied to all coil surface areas without material bridging between fins.
   b. Coating process shall ensure complete coil encapsulation of tubes, fins and headers.
   c. Color shall be high gloss black with gloss per ASTM D523-89.
   d. Uniform dry film thickness from 0.8 to 1.2 mil on all surface areas including fin edges.
   e. Superior hardness characteristics of 2H per ASTM D3363-92A and cross-hatch adhesion of 4B-5B per ASTM D3359-93.

f. Impact resistance shall be up to 160 in.-lb (ASTM D2794-93).

g. Humidity and water immersion resistance shall be up to minimum 1000 and 250 hours respectively (ASTM D2247-92 and ASTM D870-92).

h. Corrosion durability shall be confirmed through testing to be no less than 1000 hours salt spray per ASTM B117-90.

4. Optional E-coated aluminum-fin, aluminum tube condenser coils:

a. Shall have a flexible epoxy polymer coating uniformly applied to all coil external surface areas without material bridging between fins or louvers.

b. Coating process shall ensure complete coil encapsulation, including all exposed fin edges.

c. E-coat thickness of 0.8 to 1.2 mil with top coat having a uniform dry film thickness from 1.0 to 2.0 mil on all external coil surface areas, including fin edges, shall be provided.

d. Shall have superior hardness characteristics of 2H per ASTM D3363-00 and cross-hatch adhesion of 4B-5B per ASTM D3359-02.

e. Shall have superior impact resistance with no cracking, chipping or peeling per NSF/ANSI 51-2002 Method 10.2.

F. Refrigeration Components:

Refrigeration circuit components shall include liquid line service valve, suction line service valve, a full charge of compressor oil, and a partial holding charge of refrigerant.

G. Controls and Safeties:

1. Minimum control functions shall include:

a. Control wire terminal blocks.

b. Compressor lockout on auto-reset safety until reset from thermostat.

c. Each unit shall utilize the Comfort Alert™ Diagnostic Board that provides:

1) System Pressure Trip fault code indication
2) Short Cycling fault code indication
3) Locked Rotor fault code indication
4) Open Circuit fault code indication
5) Reverse Phase 3 fault code indication
6) Welded Contactor fault code indication
7) Low Voltage fault code indication
8) Anti-short cycle protection
9) Phase reversal protection

d. Minimum safety devices which are equipped with automatic reset (after resetting first at thermostat), shall include:

1) High discharge pressure cutout.
2) Low pressure cutout.

H. Operating Characteristics:

1. The capacity of the condensing unit shall meet or exceed _____ Btuh at a suction temperature of _____ °F/C. The power consumption at full load shall not exceed _____ kW.

2. The combination of the condensing unit and the evaporator or fan coil unit shall have a total net cooling capacity of _____ Btuh or greater at conditions of _____ cfm entering-air temperature at the evaporator at _____ °F/C wet bulb and _____ °F/C dry bulb, and air entering the condensing unit at _____ °F/C.

3. The system shall have an EER of _____ Btuh/Watt or greater at standard AHRI conditions.

4. Standard unit shall be capable to operate up to 125°F (52°C) and down to 40°F (4°C)

I. Electrical Requirements:

1. Nominal unit electrical characteristics shall be _____ v, 3-ph, 50 Hz. The unit shall be capable of satisfactory operation within voltage limits of _____ v to _____ v.

2. Unit electrical power shall be single-point connection.

3. Unit control circuit shall contain a 24-v transformer for unit control.

J. Special Features:

1. Low-Ambient Temperature Control:

A low-ambient temperature control shall be available as a factory-installed option or as a field-installed accessory. This low-ambient control shall regulate speed of the condenser-fan motors in response to the saturated condensing temperature of the unit. The control shall maintain correct condensing pressure at outdoor temperatures down to –20°F (–29°C).

2. Unit-Mounted, Non-Fused Disconnect Switch:

Switch shall be factory-installed and internally mounted. NEC and UL-approved non-fused switch shall provide unit power shutoff. Switch shall be accessible from outside the unit and shall provide power off lockout capability. Non-fused disconnect cannot be used when unit MOCP electrical rating exceeds 80 amps.

3. Thermostat Controls:

a. Programmable multi-stage thermostat shall have 7-day clock, holiday scheduling, large backlit display, remote sensor capability, and Title 24 compliance.

b. Commercial Electronic Thermostat shall have 7-day time clock, auto-changeover, multi-stage capability, and large LCD (liquid crystal display) temperature display.

4. Louvered Hail Guard Package:

5. Louvered hail guard package shall protect coils against damage from hail and other flying debris.

6. Condenser Coil Grille:

Grille shall add decorative appearance to unit and protect condenser coil from large objects and vandalism.