Carrier
Turn to the experts

Product Data

WeatherMaker®
Single Packaged Rooftop

3 to 6 Nominal Tons

ecoblue™ technology

48/50FC**04, 05, 06, 07

48FC: Single-Package Gas Heating/Electric Cooling Rooftop Units
50FC: Electric Cooling Rooftop Units with Optional Electric Heat
with Puron® Refrigerant (R-410A)

© Carrier 2022

Features/Benefits

The New Carrier WeatherMaker® rooftop units (RTU) with EcoBlue™ Technology were designed by customers for customers and integrate new technology to provide value added benefits never seen in this type of equipment before.

New major design features include:

- Patent pending, industry's first efficient indoor fan system using Vane Axial fan with electric commutated variable speed motor
- Reliable fixed speed scroll compressor on 3-5 ton sizes and 2 stage scroll technology on 6 ton sizes
- Upgraded unit control board with intuitive indoor fan adjustment
- Reliable copper tube/aluminum fin condenser coil with $^{5}/_{16}$-in. tubing to help reduce refrigerant charge versus prior designs
- New outdoor fan system with rugged — lightweight high impact composite fan blade

48/50FC WeatherMaker® units up to 6 tons are specifically designed to fit on Carrier roof curbs that were installed back to 1989, which makes replacement easy and eliminates the need for curb adapters or changing utility connections.

Single-stage units deliver SEERs up to 14.0. IEERs up to 15.2. All models are capable of either vertical or horizontal airflow.

The Carrier rooftop unit (RTU) was designed by customers for customers. With "no-strip" screw collars, handled access panels, and more, the unit is easy to install, easy to maintain, and easy to use. Your new 3 to 6 ton Carrier WeatherMaker rooftop unit (RTU) provides optimum comfort and control from a packaged rooftop.

Value-added features include:

- optional Humidi-MiZer® adaptive dehumidification system for improved part load humidity performance
- Puron® refrigerant (R-410A)
- single point gas and electrical connections
- optional fully integrated SystemVu™ controls
- RTU Open controller for BACnet[1], LonWorks[2], Modbus[3] and Johnson Controls N2
- 3 to 5 ton models use fixed refrigerant metering devices and 6 ton models use a TXV
- Scroll compressors with internal line-break overload protection
- Units come with an easy access tool-less filter door. Filter track tilts out for filter removal and replacement. All filters are the same size in each unit

1. BACnet is a trademark of ASHRAE.
2. LonWorks is a registered trademark of Echelon Corporation.
3. Modbus is a registered trademark of Schneider Electric.

Installation ease

All WeatherMaker units are field-convertible to horizontal airflow, which makes it easy to adjust to unexpected job-site complications. Lighter units make for easy replace. Simple, fast plug-in connections to the standard integrated unit control board (UCB). Clearly labeled connections points to reduce installation time. Also, a large control box provides room to work and room to mount Carrier accessory controls.

Easy to maintain

With the new EcoBlue Vane Axial fan system and direct drive ECM motor, there is no longer a need to adjust belts or pulleys as in past designs. This frees up maintenance and installation time.

Easy access handles by Carrier provide quick and easy access to all normally serviced components. Our "no-strip" screw system has superior holding power and guides screws into position while preventing the screw from stripping the unit's metal.

Sloped, corrosion resistant composite drain pan sheds water; and won't rust.

Easy to use

The newly re-designed Unit Control Board by Carrier puts all connections and troubleshooting points in one convenient place. Most low voltage connections are made to the same board and make it easy to access it. Setting up the fan is simple by an intuitive switch and rotary dial arrangement. Carrier rooftops have high and low pressure switches, a filter drier, and 2-in. filters standard.

Table of contents

	Page
Features/Benefits	2
Model Number Nomenclature	4
Capacity Ratings	6
Physical Data	10
Options and Accessories	15
Base Unit Dimensions	20
Accessory Dimensions	26
Performance Data	27
Fan Data	40
Electrical Data	97
Typical Wiring Diagrams	119
Sequence of Operation	131
Application Data	134
Guide Specifications	136

EcoBlue™ Technology

Direct drive EcoBlue Technology indoor fan system uses Vane Axial fan design and electrically commutated motors.

This new Vane Axial design over past belt drive systems has 75% fewer moving parts, uses up to 40% less energy and has no fan belts, blower bearings and shaft.

Streamlined control and integration

Carrier controllers make connecting WeatherMaker® rooftops into existing building automation systems easy. The units are compatible with conventional thermostat controls, SystemVu™ controls and Carrier RTU Open multi-protocol controller.

Operating efficiency and flexibility

The 48/50FC rooftops meet ASHRAE (American Society of Heating, Refrigerating, and Air-Conditioning Engineers) 90.1-2016, IECC[1] (International Energy Conservation Code) IECC-2018 minimum efficiency requirements.

1. IECC is a registered trademark of the International Code Council, Inc.

Field convertible airflow

All WeatherMaker 3 to 6 ton units are field-convertible to horizontal airflow, which makes it easy to adjust to unexpected job-site.

Comfort control

Carrier's patented Humidi-MiZer® adaptive dehumidification system is an all-inclusive factory-installed option on gas heating/electric cooling and electric cooling/electric heat models. This system provides reliable, flexible operation to meet indoor part load sensible and latent requirements.

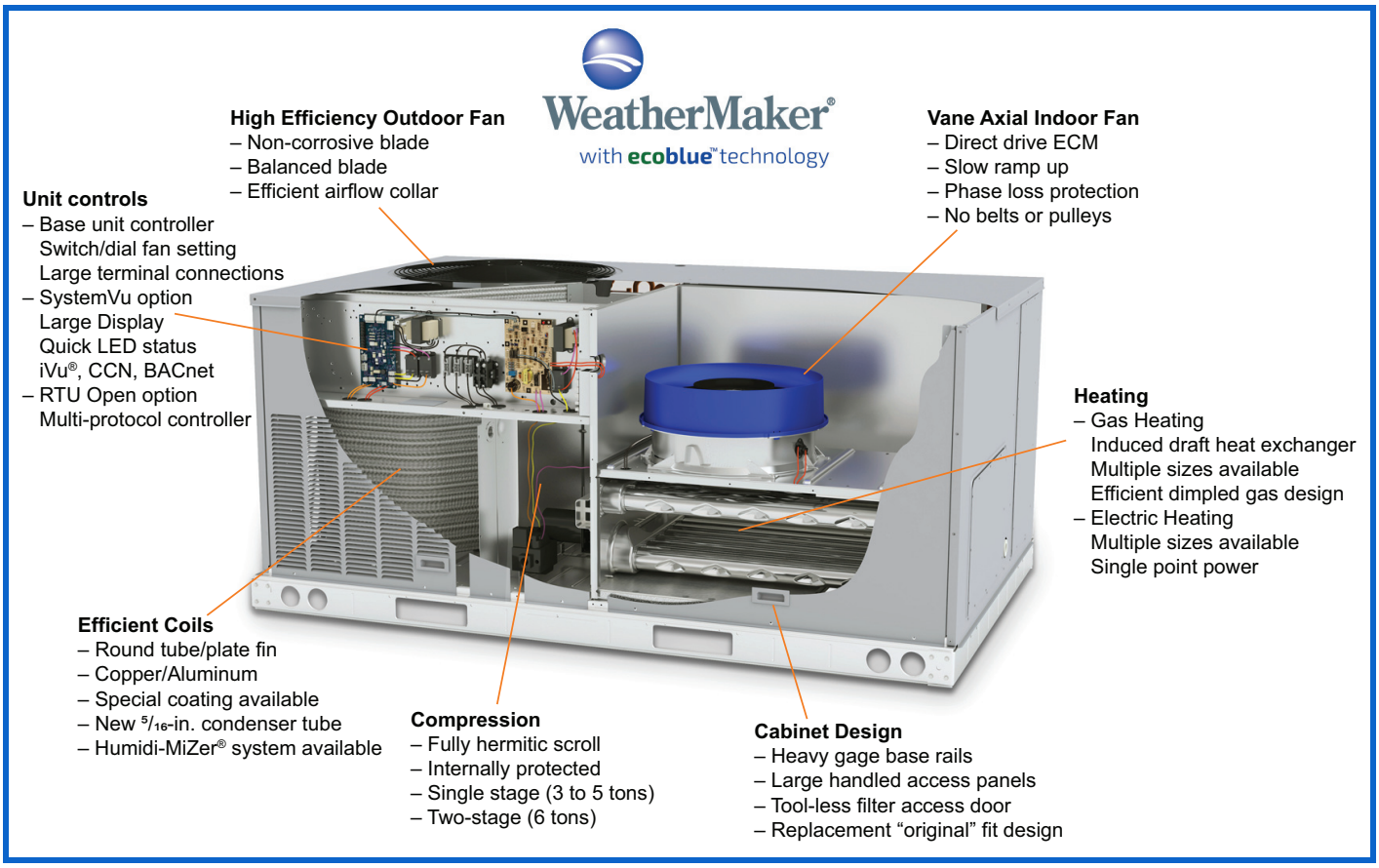

Model number nomenclature

48FC MODEL NUMBER NOMENCLATURE

Position:	1	2	3	4	5	6	7	8	9	10	11	12	13	14	15	16	17	18
Example:	4	8	F	C	D	A	0	4	A	2	A	5	-	0	A	0	A	0

Unit Heat Type
48 = Gas Heat Packaged Rooftop

Model Series — WeatherMaker®
FC = 14.0 SEER Standard Efficiency, sizes 04-06
13.4 SEER2 Standard Efficiency, sizes 04-06
15.0 IEER Standard Efficiency, size 07

Heat Size
D = Low Gas Heat
E = Medium Gas Heat
F = High Gas Heat
L = Low NOx — Low Gas Heat[1]
S = Low Heat with Stainless Steel Exchanger
R = Medium Heat with Stainless Steel Exchanger
T = High Heat with Stainless Steel Exchanger
(Low NOx models include Stainless Steel HX)

Refrig. Systems Options
A = Std One Stage Cooling Models[1]
B = Std One Stage Cooling Models with Humidi-MiZer® [1, 2]
C = Std One Stage Cooling Models, 1-phase voltage (SEER2)[1, 3]
M = Single Circuit, Two Stage Cooling Models[4]
N = Single Circuit, Two Stage Cooling Models with Humidi-MiZer[2, 4]

Cooling Tons
04 = 3 tons
05 = 4 tons
06 = 5 tons
07 = 6 tons

Sensor Options
A = None
B = Return Air (RA) Smoke Detector
C = Supply Air (SA) Smoke Detector
D = RA + SA Smoke Detector
E = CO_2 Sensor
F = RA Smoke Detector and CO_2 Sensor
G = SA Smoke Detector and CO_2 Sensor
H = RA + SA Smoke Detector and CO_2 Sensor
J = Condensate Overflow Switch
K = Condensate Overflow Switch + RA Smoke Detector
L = Condensate Overflow Switch + RA and SA Smoke Detectors
M = Condensate Overflow Switch + SA Smoke Detector

Indoor Fan Options
1 = Direct Drive — EcoBlue — Standard Static
2 = Direct Drive — EcoBlue — Medium Static
3 = Direct Drive — EcoBlue — High Static

Coil Options (Outdoor - Indoor — Hail Guard)
A = Al/Cu - Al/Cu
B = Precoat Al/Cu - Al/Cu
C = E-coat Al/Cu - Al/Cu
D = E-coat Al/Cu - E-coat Al/Cu
E = Cu/Cu - Al/Cu
F = Cu/Cu - Cu/Cu
M = Al/Cu - Al/Cu — Louvered Hail Guard
N = Precoat Al/Cu - Al/Cu — Louvered Hail Guard
P = E-coat Al/Cu - Al/Cu — Louvered Hail Guard
Q = E-coat Al/Cu - E-coat Al/Cu — Louvered Hail Guard
R = Cu/Cu - Al/Cu — Louvered Hail Guard
S = Cu/Cu - Cu/Cu — Louvered Hail Guard

Packaging & Seismic Compliance
0 = Standard
1 = LTL

Electrical Options
A = None
C = Non-Fused Disconnect (NFD)
D = Thru-the-Base (TTB) Connections
F = Non-Fused Disconnect and TTB Connections

Service Options
0 = None
1 = Unpowered Convenience Outlet (CO)
2 = Powered Convenience Outlet
3 = Hinged Panels
4 = Hinged Panels and Unpowered CO
5 = Hinged Panels and Powered CO

Intake / Exhaust Options
A = None
B = Temperature Economizer w/ Barometric Relief
F = Enthalpy Economizer w/ Barometric Relief
K = Two-Position Damper[1]
U = Temperature Ultra Low Leak Economizer with Barometric Relief
W = Enthalpy Ultra Low Leak Economizer with Barometric Relief

Base Unit Controls
0 = Electromechanical Controls — can be used with field-installed W7212 EconoMi$er® IV (Non-Fault Detection and Diagnostic)[1]
2 = RTU Open Multi-Protocol Controller
3 = SystemVu™ Controls
6 = Electromechanical Controls – can be used with W7220 EconoMi$er X (with Fault Detection and Diagnostic)

Design Revision
- = Factory Design Revision

Voltage
1 = 575-3-60
3 = 208/230-1-60[1, 5]
5 = 208/230-3-60
6 = 460-3-60
9 = 400-3-50[4]

[1] Size 04/05/06 models only.
[2] Units with Humidi-MiZer System include Low Ambient controller.
[3] Units meet Department of Energy 2023 SEER2 requirements.
[4] Size 07 models only.
[5] The following are not available as a factory-installed options for models with this voltage code: Humidi-MiZer System, Coated Coils or Cu Fin Coils, Louvered Hail Guards, Economizer or Two-Position Damper, Powered 115 Volt Convenience Outlet.

50FC MODEL NUMBER NOMENCLATURE

Position:	1	2	3	4	5	6	7	8	9	10	11	12	13	14	15	16	17	18
Example:	5	0	F	C	-	A	0	4	A	2	A	5	-	0	A	0	A	0

Unit Heat Type
50 = Electric Heat Packaged Rooftop

Model Series — WeatherMaker®
FC = 14.0 SEER Standard Efficiency, sizes 04-06
13.4 SEER2 Standard Efficiency, sizes 04-06
15.2 IEER Standard Efficiency, size 07

Heat Size
- = No heat

Refrig. Systems Options
A = Standard One Stage Cooling Models[1]
B = Standard One Stage Cooling Models with Humidi-MiZer® system[1, 2]
C = Standard One Stage Cooling Models, 1-phase voltage (SEER2)[1, 3]
M = Single Circuit, Two Stage Cooling Models[4]
N = Single Circuit, Two Stage Cooling Models with Humidi-MiZer system[2, 4]

Cooling Tons
04 = 3 tons
05 = 4 tons
06 = 5 tons
07 = 6 tons

Sensor Options
A = None
B = Return Air (RA) Smoke Detector
C = Supply Air (SA) Smoke Detector
D = RA + SA Smoke Detector
E = CO_2 Sensor
F = RA Smoke Detector and CO_2 Sensor
G = SA Smoke Detector and CO_2 Sensor
H = RA + SA Smoke Detector and CO_2 Sensor
J = Condensate Overflow Switch
K = Condensate Overflow Switch and RA Smoke Detector
L = Condensate Overflow Switch and RA and SA Smoke Detectors
M = Condensate Overflow Switch and SA Smoke Detector

Indoor Fan Options
1 = Direct Drive – EcoBlue – Standard Static
2 = Direct Drive – EcoBlue – Medium Static
3 = Direct Drive – EcoBlue – High Static

Coil Options – (Outdoor - Indoor - Hail Guard)
A = Al/Cu - Al/Cu
B = Precoat Al/Cu - Al/Cu
C = E-coat Al/Cu - Al/Cu
D = E-coat Al/Cu - E-coat Al/Cu
E = Cu/Cu - Al/Cu
F = Cu/Cu - Cu/Cu
M = Al/Cu - Al/Cu — Louvered Hail Guard
N = Precoat Al/Cu - Al/Cu — Louvered Hail Guard
P = E-coat Al/Cu - Al/Cu — Louvered Hail Guard
Q = E-coat Al/Cu - E-coat Al/Cu — Louvered Hail Guard
R = Cu/Cu - Al/Cu — Louvered Hail Guard
S = Cu/Cu - Cu/Cu — Louvered Hail Guard

Packaging & Seismic Compliance
0 = Standard
1 = LTL

Electrical Options
A = None
C = Non-Fused Disconnect (NFD)
D = Thru-the-Base (TTB) Connections
F = Non-Fused Disconnect and TTB Connections

Service Options
0 = None
1 = Unpowered Convenience Outlet (CO)
2 = Powered Convenience Outlet
3 = Hinged Panels
4 = Hinged Panels and Unpowered CO
5 = Hinged Panels and Powered CO

Intake / Exhaust Options
A = None
B = Temperature Economizer with Barometric Relief
F = Enthalpy Economizer with Barometric Relief
K = Two-Position Damper[1]
U = Temperature Ultra Low Leak Economizer with Barometric Relief
W = Enthalpy Ultra Low Leak Economizer with Barometric Relief

Base Unit Controls
0 = Electromechanical Controls – can be used with field-installed W7212 EconoMi$er® IV (Non-Fault Detection and Diagnostic)[1]
2 = RTU Open Multi-Protocol Controller
3 = SystemVu™ Controls
6 = Electromechanical Controls – can be used with W7220 EconoMi$er X (with Fault Detection and Diagnostic)

Design Revision
- = Factory Design Revision

Voltage
1 = 575-3-60
3 = 208/230-1-60[1, 5]
5 = 208/230-3-60
6 = 460-3-60
9 = 400-3-50[4]

[1] Size 04/05/06 models only.
[2] Units with Humidi-MiZer System include Low Ambient controller.
[3] Units meet Department of Energy 2023 SEER2 requirements.
[4] Size 07 models only.
[5] The following are not available as a factory-installed options for models with this voltage code: Humidi-MiZer System, Coated Coils or Cu Fin Coils, Louvered Hail Guards, Economizer or Two-Position Damper, Powered 115 Volt Convenience Outlet.

Capacity ratings

48FC AHRI RATINGS

48FC UNIT	COOLING STAGES	NOMINAL CAPACITY (TONS)	NET COOLING CAPACITY (MBH)	TOTAL POWER (kW)	SEER	EER	IEER WITH 2-SPEED INDOOR FAN MOTOR
48FC*A04	1	3	34.5	3.0	14.0	11.5	N/A
48FC*A05	1	4	47.0	4.1	14.0	11.6	N/A
48FC*A06	1	5	58.5	5.3	14.0	11.0	N/A
48FC*M07	2	6	70.0	6.4	N/A	11.0	15.0

LEGEND

AHRI — Air-Conditioning, Heating and Refrigeration Institute
EER — Energy Efficiency Ratio
IEER — Integrated Energy Efficiency Ratio
SEER — Integrated Energy Efficiency Ratio

NOTES:

1. Rated in accordance with AHRI Standards 210/240 (04-06 size) and 340/360 (07 size).
2. Rating are based on:
   Cooling Standard: 80°F (27°C) db, 67°F (19°C) wb indoor air temperature and 95°F (35°C) db outdoor air temperature.
   IEER Standard: A measure that expresses cooling part-load EER efficiency for commercial unitary air-conditioning and heat pump equipment on the basis of weighted operation at various load capacities.
3. All 48FC units comply with ASHRAE 90.1-2016 (American Society of Heating, Refrigerating, and Air-Conditioning Engineers) and DOE-2018 (Department of Energy) Energy Standard for minimum SEER and EER requirements.
4. 48FC units comply with US Energy Policy Act (2005). To evaluate code compliance requirements, refer to state and local codes.

50FC AHRI RATINGS

50FC UNIT	COOLING STAGES	NOMINAL CAPACITY (TONS)	NET COOLING CAPACITY (MBH)	TOTAL POWER (kW)	SEER	EER	IEER WITH 2-SPEED INDOOR FAN MOTOR
50FC*A04	1	3	34.4	2.9	14.0	11.7	N/A
50FC*A05	1	4	47.0	4.0	14.0	11.8	N/A
50FC*A06	1	5	58.5	5.2	14.0	11.2	N/A
50FC*M07	2	6	70.0	6.3	N/A	11.2	15.2

LEGEND

AHRI — Air-Conditioning, Heating and Refrigeration Institute
EER — Energy Efficiency Ratio
IEER — Integrated Energy Efficiency Ratio
SEER — Integrated Energy Efficiency Ratio

NOTES:

1. Rated in accordance with AHRI Standards 210/240 (04-06 size) and 340/360 (07 size).
2. Rating are based on:
   Cooling Standard: 80°F (27°C) db, 67°F (19°C) wb indoor air temperature and 95°F (35°C) db outdoor air temperature.
   IEER Standard: A measure that expresses cooling part-load EER efficiency for commercial unitary air-conditioning and heat pump equipment on the basis of weighted operation at various load capacities.
3. All 50FC units comply with ASHRAE 90.1-2016 (American Society of Heating, Refrigerating, and Air-Conditioning Engineers) and DOE-2018 (Department of Energy) Energy Standard for minimum SEER and EER requirements.
4. 50FC units comply with US Energy Policy Act (2005). To evaluate code compliance requirements, refer to state and local codes.

SOUND RATINGS TABLE

48/50FC UNIT	COOLING STAGES	OUTDOOR SOUND (dB) AT 60 Hz								
		A-WEIGHTED	63	125	250	500	1000	2000	4000	8000
A04	1	79	85.6	84.7	80.5	76.0	72.4	68.0	62.8	59.3
A05	1	79	85.6	84.7	80.5	76.0	72.4	68.0	62.8	59.3
A06	1	79	85.6	84.7	80.5	76.0	72.4	68.0	62.8	59.3
M07	2	79	85.6	84.7	80.5	76.0	72.4	68.0	62.8	59.3

LEGEND

dB — Decibel

NOTES:

1. Outdoor sound data is measured in accordance with AHRI.
2. Measurements are expressed in terms of sound power. Do not compare these values to sound pressure values because sound pressure depends on specific environmental factors which normally do not match individual applications. Sound power values are independent of the environment and therefore more accurate.
3. A-weighted sound ratings filter out very high and very low frequencies, to better approximate the response of “average” human ear. A-weighted measurements for Carrier units are taken in accordance with AHRI.

Capacity ratings (cont)

MINIMUM - MAXIMUM AIRFLOW RATINGS (CFM) — NATURAL GAS AND PROPANE

UNIT	HEAT LEVEL	VOLTAGE	COOLING				HEATING*	
			MINIMUM AIRFLOW CFM	MINIMUM 2-SPEED AIRFLOW (LOW SPEED)	MINIMUM 2-SPEED AIRFLOW (HIGH SPEED)	MAXIMUM AIRFLOW CFM	MINIMUM AIRFLOW CFM	MAXIMUM AIRFLOW CFM
48FC04**	LOW	1 PHASE	900	N/A	N/A	1500	890	1950
	MED						800	1520
	HIGH						N/A	N/A
48FC05**	LOW	1 PHASE	1200	N/A	N/A	2000	890	2440
	MED						1050	2280
	HIGH						1220	2170
48FC06**	LOW	1 PHASE	1500	N/A	N/A	2500	890	3250
	MED						1050	2730
	HIGH						1220	2790
48FC04**	LOW	3 PHASE	900	N/A	N/A	1500	910	2010
	MED						960	1160
	HIGH						N/A	N/A
48FC05**	LOW	3 PHASE	1200	N/A	N/A	2000	910	2010
	MED						1250	2330
	HIGH						1390	2220
48FC06**	LOW	3 PHASE	1500	N/A	N/A	2500	910	2510
	MED						1250	2720
	HIGH						1390	2780
48FC07**	LOW	3 PHASE	1800	1200	1800	3000	910	3350
	MED						1250	3260
	HIGH						1390	3170

* Heating rating values are identical for aluminum heat exchangers and stainless steel heat exchangers.

MINIMUM - MAXIMUM AIRFLOW RATINGS (CFM) — COOLING UNITS AND ACCESSORY ELECTRIC HEAT

UNIT	COOLING				ELECTRIC HEAT*	
	MINIMUM AIRFLOW CFM	MINIMUM 2- SPEED AIRFLOW (LOW SPEED)	MINIMUM 2- SPEED AIRFLOW (HIGH SPEED)	MAXIMUM AIRFLOW CFM	MINIMUM AIRFLOW CFM	MAXIMUM AIRFLOW CFM
50FC04**	900	N/A	N/A	1500	900	1500
50FC05**	1200	N/A	N/A	2000	1200	2000
50FC06**	1500	N/A	N/A	2500	1500	2500
50FC07**	1800	1200	1800	3000	1800	3000

* Electric heat modules are available as field-installed accessories for 50FC units.

HEAT RATING TABLE — NATURAL GAS AND PROPANE

48FC UNIT		GAS HEAT	AL/SS HEAT EXCHANGER		TEMPERATURE RISE (°F)	THERMAL EFFICIENCY (%)	AFUE EFFICIENCY (%)
			INPUT/OUTPUT STAGE 1 (MBH)	INPUT/OUTPUT STAGE 2 (MBH)			
Single Phase	04	LOW	–/–	65/53	25-55	81	81
		MED	–/–	90/73	45-85	82	81
		HIGH	–/–	—	—	—	—
	05	LOW	–/–	65/53	20-55	81	81
		MED	–/–	90/73	30-65	82	81
		HIGH	–/–	130/106	45-80	81	81
	06	LOW	–/–	65/53	15-55	81	81
		MED	–/–	90/73	25-65	82	81
		HIGH	–/–	130/106	35-80	81	81
Three Phase	04	LOW	–/–	67/54	25-55	81	N/A
		MED	82/65	110/93	50-85	80	N/A
		HIGH	—	—	—	—	—
	05	LOW	–/–	67/54	25-55	81	N/A
		MED	–/–	110/88	35-65	80	N/A
		HIGH	120/96	150/120	50-80	80	N/A
	06	LOW	–/–	67/54	20-55	81	N/A
		MED	–/–	110/88	30-65	80	N/A
		HIGH	120/96	150/120	40-80	80	N/A
	07	LOW	–/–	67/54	15-55	81	N/A
		MED	–/–	110/88	25-65	80	N/A
		HIGH	120/96	150/120	30-80	80	N/A

HEAT RATING TABLE — LOW NO_X

48FC UNIT		GAS HEAT	LOW NOx HEAT EXCHANGER		TEMPERATURE RISE (°F)	THERMAL EFFICIENCY (%)	AFUE EFFICIENCY (%)
			INPUT/OUTPUT STAGE 1 (MBH)	INPUT/OUTPUT STAGE 2 (MBH)			
Single Phase	04	LOW	—	60/49	20-50	82.0	81.3
	05	LOW	—	60/49	20-50	82.0	81.3
	06	LOW	—	60/49	15-50	82.0	81.3
Three Phase	04	LOW	—	60/49	20-50	82.0	81.3
	05	LOW	—	60/49	20-50	82.0	81.3
	06	LOW	—	60/49	15-50	82.0	81.3

LEGEND

AFUE — Annual Fuel Utilization Efficiency
MBH — Btuh in thousands

48/50FC 3 TO 4 TON PHYSICAL DATA

48/50FC UNIT	48/50FC*A04	48/50FC*B04	48/50FC*A05	48/50FC*B05
NOMINAL TONS	3		4	
BASE UNIT OPERATING WT (lb) 48FC/50FC*	482/437		543/498	
REFRIGERATION SYSTEM				
No. Circuits/No. Compressors/Type	1 / 1/ Scroll			
Puron® (R-410A) charge A/B (lbs-oz)	4-6	—	9-14	—
Humidi-MiZer® Puron (R-410A) charge A/B (lbs-oz)	—	7.6	—	14-6
Metering device	Acutrol			
Humidi-MiZer metering device	—	TXV-Acutrol	—	TXV-Acutrol
High-Pressure Trip/Reset (psig)	630/505			
Low-Pressure Trip/Reset (psig)	54/117	27/44	54/117	27/44
EVAPORATOR COIL				
Material (Tube/Fin)	Cu/Al			
Coil Type	$^{3}/_{8}$-in. RTPF			
Rows/FPI	2/15		3/15	
Total Face Area (ft²)	5.5			
Condensate Drain Connection Size	$^{3}/_{4}$-in.			
CONDENSER COIL				
Material	Cu/Al			
Coil Type	$^{5}/_{16}$-in. RTPF			
Rows/FPI	1/18		2/18	
Total Face Area (ft²)	11.7		15.9	
HUMIDI-MIZER COIL				
Material	—	Cu/Al	—	Cu/Al
Coil Type	—	$^{3}/_{8}$-in. RTPF	—	$^{3}/_{8}$-in. RTPF
Rows/FPI	—	1/17	—	2/17
Total Face Area (ft²)	—	4.1	—	4.1
EVAPORATOR FAN AND MOTOR				
Standard Static 1 Phase				
Motor Qty/Drive Type	1/Direct	—	1/Direct	—
Max Cont BHP	0.44	—	0.72	—
RPM Range	189-1890	—	190-1900	—
Fan Qty/Type	1/Vane Axial	—	1/Vane Axial	—
Fan Diameter (in.)	16.6	—	16.6	—
Medium Static 1 Phase				
Motor Qty/Drive Type	1/Direct	—	1/Direct	—
Max Cont BHP	0.71	—	1.06	—
RPM Range	219-2190	—	217-2170	—
Fan Qty/Type	1/Vane Axial	—	1/Vane Axial	—
Fan Diameter (in.)	16.6	—	16.6	—
High Static 1 Phase				
Motor Qty/Drive Type	1/Direct	—	1/Direct	—
Max Cont BHP	1.07	—	1.53	—
RPM Range	249-2490	—	246-2460	—
Fan Qty/Type	1/Vane Axial	—	1/Vane Axial	—
Fan Diameter (in.)	16.6	—	16.6	—
Standard Static 3 Phase				
Motor Qty/Drive Type	1/Direct			
Max Cont BHP	0.44		0.72	
RPM Range	189-1890		190-1900	
Fan Qty/Type	1/Vane Axial			
Fan Diameter (in.)	16.6			
Medium Static 3 Phase				
Motor Qty/Drive Type	1/Direct			
Max Cont BHP	0.71		1.06	
RPM Range	219-2190		217-2170	
Fan Qty/Type	1/Vane Axial			
Fan Diameter (in.)	16.6			

48/50FC 3 TO 4 TON PHYSICAL DATA (cont)

48/50FC UNIT	48/50FC*A04	48/50FC*B04	48/50FC*A05	48/50FC*B05
High Static 3 Phase				
Motor Qty/Drive Type	1/Direct			
Max Cont BHP	1.07		1.96	
RPM Range	249-2490		266-2660	
Fan Qty/Type	1/Vane Axial			
Fan Diameter (in.)	16.6			
CONDENSER FAN AND MOTOR				
Qty / Motor Drive Type	1 / Direct			
Motor HP/RPM	1/4 / 1100	1/4 / 1100	1/4 / 1100	1/4 / 1100
Fan Diameter (in.)	23			
FILTERS				
RA Filter Qty / Size (in.)	2 / 16x25x2			
OA Inlet Screen Qty / Size (in.)	1 / 20x24x1			

* Base unit operating weight does not include weight of options.

Physical data (cont)

48/50FC 5 TO 6 TON PHYSICAL DATA

48/50FC UNIT	48/50FC*A06	48/50FC*B06	48/50FC*M07	48/50FC* N07
NOMINAL TONS	5		6	
BASE UNIT OPERATING WT (lb) 48FC/50FC*	556/511		607/562	
REFRIGERATION SYSTEM				
No. Circuits/No. Compressors/Type	1 / 1 / Scroll		1 / 1 / 2-Stage Scroll	
Puron® (R-410A) charge A/B (lbs-oz)	8-9	—	10-3	—
Humidi-MiZer® Puron (R-410A) charge A/B (lbs-oz)	—	15-0	—	20-8
Metering device	Acutrol		TXV	
Humidi-MiZer metering device	—	TXV-Acutrol	—	TXV
High-Pressure Trip/Reset (psig)	630/505			
Low-Pressure Trip/Reset (psig)	54/117	27/44	54/117	27/44
EVAPORATOR COIL				
Material (Tube/Fin)	Cu/Al			
Coil Type	3/8-in. RTPF			
Rows/FPI	4/15			
Total Face Area (ft²)	5.5		7.3	
Condensate Drain Connection Size	3/4-in.			
CONDENSER COIL				
Material	Cu/Al			
Coil Type	5/16-in. RTPF			
Rows/FPI	2/18			
Total Face Area (ft²)	15.9		15.0	
HUMIDI-MIZER COIL				
Material	—	Cu/Al	—	Cu/Al
Coil Type	—	3/8-in. RTPF	—	3/8-in. RTPF
Rows/FPI	—	2/17	—	2/17
Total Face Area (ft²)	—	4.1	—	5.5
EVAPORATOR FAN AND MOTOR				
Standard Static 1 Phase				
Motor Qty/Drive Type	1/Direct	—		
Max Cont BHP	1.06	—		
RPM Range	215-2150	—		
Fan Qty/Type	1/Vane Axial	—		
Fan Diameter (in.)	16.6	—		
Medium Static 1 Phase				
Motor Qty/Drive Type	1/Direct	—		
Max Cont BHP	1.44	—		
RPM Range	239-2390	—		
Fan Qty/Type	1/Vane Axial	—		
Fan Diameter (in.)	16.6	—		
Standard Static 3 Phase				
Motor Qty/Drive Type	1/Direct			
Max Cont BHP	1.06		1.31	
RPM Range	215-2150		230-2300	
Fan Qty/Type	1/Vane Axial			
Fan Diameter (in.)	16.6			
Medium Static 3 Phase				
Motor Qty/Drive Type	1/Direct			
Max Cont BHP	1.44		1.76	
RPM Range	239-2390		253-2530	
Fan Qty/Type	1/Vane Axial			
Fan Diameter (in.)	16.6			
High Static 3 Phase				
Motor Qty/Drive Type	1/Direct			
Max Cont BHP	2.43			
RPM Range	284-2836			
Fan Qty/Type	1/Vane Axial			
Fan Diameter (in.)	16.6			
CONDENSER FAN AND MOTOR				
Qty / Motor Drive Type	1 / Direct			
Motor HP/RPM	1/4 / 1100	1/4 / 1100	1/4 / 1100	1/4 / 1100
Fan Diameter (in.)	23			
FILTERS				
RA Filter Qty / Size (in.)	2 / 16x25x2		4 / 16x16x2	
OA Inlet Screen Qty / Size (in.)	1 / 20x24x1			

48FC 3 TO 5 TON GAS HEAT DATA — 1 PHASE UNITS

48FC UNIT	48FC**04	48FC**05	48FC**06
GAS CONNECTION			
No. of Gas Valves		1	
Natural Gas Supply Line Pressure (in. wg)/(psig)		4-13 / 0.18-0.47	
Liquid Propane Supply Line Pressure (in. wg)/(psig)		11-13 / 0.40-0.47	
HEAT ANTICIPATOR SETTING (AMPS)			
First Stage		0.14	
Second Stage		0.14	
NATURAL GAS HEAT			
LOW			
No. of Stages / No. of Burners (total)		1 / 2	
Connection Size		1/2-in. NPT	
Rollout Switch Opens / Closes (°F)		195 / 115	
Temperature Rise (°F)	25-55	20-55	15-55
MEDIUM			
No. of Stages / No. of Burners (total)		1 / 3	
Connection Size		1/2-in. NPT	
Rollout Switch Opens / Closes (°F)		195 / 115	
Temperature Rise (°F)	45-85	30-65	25-65
HIGH			
No. of Stages / No. of Burners (total)	—	1 / 3	
Connection Size	—	1/2-in. NPT	
Rollout Switch Opens / Closes (°F)	—	195 / 115	
Temperature Rise (°F)	—	45-80	35-80
LIQUID PROPANE HEAT			
LOW			
No. of Stages / No. of Burners (total)		1 / 2	
Connection Size		1/2-in. NPT	
Rollout Switch Opens / Closes (°F)		195 / 115	
Temperature Rise (°F)	25-55	20-55	15-55
MEDIUM			
No. of Stages / No. of Burners (total)		1 / 3	
Connection Size		1/2-in. NPT	
Rollout Switch Opens / Closes (°F)		195 / 115	
Temperature Rise (°F)	45-85	30-65	25-65
HIGH			
No. of Stages / No. of Burners (total)	—	1 / 3	
Connection Size	—	1/2-in. NPT	
Rollout Switch Opens / Closes (°F)	—	195 / 115	
Temperature Rise (°F)	—	45-80	35-80
LOW NOx GAS HEAT			
LOW			
No. of Stages / No. of Burners (total)		1 / 2	
Connection Size		1/2-in. NPT	
Rollout Switch Opens / Closes (°F)		195 / 115	
Temperature Rise (°F)	20-50		15-50

LEGEND

BHP — Break Horsepower
FPI — Fins Per Inch
OA — Outdoor Air
RA — Return Air

* Base unit operating weight does not include weight of options.

Physical data (cont)

48FC 3 TO 6 TON GAS HEAT DATA — 3 PHASE UNITS

48FC UNIT	48FC**04	48FC**05	48FC**06	48FC**07
GAS CONNECTION				
No. of Gas Valves	1			
Natural Gas Supply Line Pressure (in. wg)/(psig)	4-13 / 0.18-0.47			
Liquid Propane Supply Line Pressure (in. wg)/(psig)	11-13 / 0.40-0.47			
HEAT ANTICIPATOR SETTING (AMPS)				
First Stage	0.14			
Second Stage	0.14			
NATURAL GAS HEAT				
LOW				
No. of Stages / No. of Burners (total)	1 / 2			
Connection Size	1/2-in. NPT			
Rollout Switch Opens / Closes (°F)	195 / 115			
Temperature Rise (°F)	25-55		20-55	15-55
MEDIUM				
No. of Stages / No. of Burners (total)	2 / 3	1 / 3		
Connection Size	1/2-in. NPT			
Rollout Switch Opens / Closes (°F)	195 / 115			
Temperature Rise (°F)	50-85	35-65	30-65	25-65
HIGH				
No. of Stages / No. of Burners (total)	—	2/ 3		
Connection Size	—	1/2-in. NPT		
Rollout Switch Opens / Closes (°F)	—	195 / 115		
Temperature Rise (°F)	—	50-80	40-80	35-80
LIQUID PROPANE HEAT				
LOW				
No. of Stages / No. of Burners (total)	1 / 2			
Connection Size	1/2-in. NPT			
Rollout Switch Opens / Closes (°F)	195 / 115			
Temperature Rise (°F)	25-55		20-55	15-55
MEDIUM				
No. of Stages / No. of Burners (total)	2 / 3	1 / 3		
Connection Size	1/2-in. NPT			
Rollout Switch Opens / Closes (°F)	195 / 115			
Temperature Rise (°F)	50-85	35-65	30-65	25-65
HIGH				
No. of Stages / No. of Burners (total)	—	2 / 3		
Connection Size	—	1/2-in. NPT		
Rollout Switch Opens / Closes (°F)	—	195 / 115		
Temperature Rise (°F)	—	50-80	40-80	35-80
LOW NOx GAS HEAT				
LOW				
No. of Stages / No. of Burners (total)	1 / 2			—
Connection Size	1/2-in. NPT			—
Rollout Switch Opens / Closes (°F)	195 / 115			—
Temperature Rise (°F)	20-50		15-50	—

Options and accessories

ITEM	OPTION*	ACCESSORY†
GAS HEAT (48FC units only)		
Low, Medium or High Gas Heat — Aluminized Heat Exchanger	X	
Low, Medium or High Gas Heat — Stainless Steel Heat Exchanger	X	
Propane Conversion Kit		X
High Altitude Conversion Kit		X
Flue Discharge Deflector		X
Flue Shield		X
ELECTRIC HEAT (50FC units only)		
Electric Resistance Heaters		X
Single Point Kits		X
CABINET		
Thru-the-Base electrical or gas-line connections	X	X
Hinged Access Panels	X	
MERV-8 Filters	X	
COIL OPTIONS		
Cu/Cu indoor and/or outdoor coils[1]	X	
Pre-coated outdoor coils[1]	X	
Premium, E-coated outdoor coils[1]	X	
HUMIDITY CONTROL		
Humidi-MiZer® Adaptive Dehumidification System[1]	X	
CONDENSER PROTECTION		
Condenser coil hail guard (louvered design)[1]	X	X
CONTROLS		
Thermostats, temperature sensors, and subbases		X
SystemVu™ DDC communicating controller	X	
RTU Open Multi-Protocol controller	X	
Smoke detector (supply and/or return air)	X	
Horn Strobe Annunciator[2]		X
Time Guard II compressor delay control circuit		X
Phase Monitor	X	X
Condensate Overflow switch	X	X

ITEM	OPTION*	ACCESSORY†
ECONOMIZERS AND OUTDOOR AIR DAMPERS		
EconoMi$er® IV for electro-mechanical controls - Non FDD (Standard air leak damper models)[1, 3, 9]	X	X
EconoMi$er2 for DDC controls (Standard and Ultra Low Leak air damper models)[1, 4]	X	X
EconoMi$er X for electro-mechanical controls, complies with FDD (Standard and Ultra Low Leak damper models)[1, 3, 9]	X	X
Motorized 2-position outdoor-air damper[1]	X	X
Manual outdoor-air damper (25% and 50%)		X
Barometric relief[5]	X	X
Power exhaust - prop design		X
ECONOMIZER SENSORS AND IAQ DEVICES		
Single dry bulb temperature sensors[6]	X	X
Differential dry bulb temperature sensors[6]		X
Single enthalpy sensors[6]	X	X
Differential enthalpy sensors[6]		X
CO_2 sensor (wall, duct, or unit mounted)[6]	X	X
INDOOR MOTOR AND DRIVE		
Multiple motor and drive packages	X	
LOW AMBIENT CONTROL		
Winter start kit[7]		X
Low Ambient controller to -20°F (-29°C)[7]		X
POWER OPTIONS		
Convenience outlet (powered)[1]	X	
Convenience outlet (unpowered)	X	
Non-fused disconnect[8]	X	
ROOF CURBS		
Roof curb 14-in. (356 mm)		X
Roof curb 24-in. (610 mm)		X

* Factory-installed option.

† Field-installed accessory.

NOTES:

1. Not available as a factory-installed option on single phase (-3 voltage code) models. Use field-installed accessory where available.
2. Requires a field-supplied 24V transformer for each application. See price pages for details.
3. FDD (Fault Detection and Diagnostic) capability per California Title 24 section 120.2.
4. Models with SystemVu and RTU Open DDC controls comply with California Title 24 Fault Detection and Diagnostic (FDD).
5. Included with economizer.
6. Sensors used to optimize economizer performance.
7. See application data for assistance.
8. Non-fused disconnect switch cannot be used when unit electrical rating exceeds:
   208-230/1/60 and 208-230/3/60 = 80 amps (FLA).
   480/3/60 and 575/3/60 = 80 amps (FLA).
   Carrier RTUBuilder automatically selects the amp limitations.
9. Available as a factory-installed option for 04-06 models only.

Factory-installed options

Economizer (dry-bulb or enthalpy)

Economizers save money. They bring in fresh, outside air for ventilation; and provide cool, outside air to cool your building. This is the preferred method of low-ambient cooling. When coupled to CO_2 sensors, economizers can provide even more savings by coupling the ventilation air to only that amount required.

Economizers are available, installed and tested by the factory, with either enthalpy or dry-bulb temperature inputs. Additional sensors are available as accessories to optimize the economizers. Economizers include a powered exhaust system to help equalize building pressures.

Economizers include gravity controlled barometric relief that helps equalize building pressure and ambient air pressures. This can be a cost effective solution to prevent building pressurization. Economizers are available in Ultra Low Leak and standard low leak versions. Economizers can be factory-installed or easily field-installed.

Unit mounted CO_2 sensor

The CO_2 sensor works with the economizer to intake only the correct amount of outside air for ventilation. As occupants fill your building, the CO_2 sensor detects their presence through increasing CO_2 levels, and opens the economizer appropriately. When the occupants leave, the CO_2 levels decrease, and the sensor appropriately closes the economizer. This intelligent control of the ventilation air, called demand controlled ventilation (DCV), reduces the overall load on the rooftop, saving money. It is also available as a field-installed accessory.

Smoke detector (supply and/or return air)

Trust the experts. Smoke detectors make your application safer and your job easier. Carrier smoke detectors immediately shut down the rooftop unit when smoke is detected. They are available, installed by the factory, for supply air, return air, or both.

Optional Humidi-MiZer® adaptive dehumidification system

Carrier's Humidi-MiZer adaptive dehumidification system is an all-inclusive factory-installed option that can be ordered with any WeatherMaker® 48/50FC04-07 rooftop unit, with the exception of single phase voltage (208-230/1/60) units.

This system expands the envelope of operation of Carrier's WeatherMaker rooftop products to provide unprecedented flexibility to meet year round comfort conditions.

The Humidi-MiZer adaptive dehumidification system has a unique dual operational mode setting. The Humidi-MiZer system provides greater dehumidification of the occupied space by two modes of dehumidification operations in addition to its normal design cooling mode.

The WeatherMaker 48/50FC04-07 rooftop coupled with the Humidi-MiZer system is capable of operating in normal design cooling mode, sub-cooling mode, and hot gas reheat mode. Normal design cooling mode is when the unit will operate under its normal sequence of operation by cycling compressors to maintain comfort conditions.

Sub-cooling mode will operate to satisfy part load type conditions when the space requires combined sensible and a higher proportion of latent load control. Hot Gas Reheat mode will operate when outdoor temperatures diminish and the need for latent capacity is required for sole humidity control Hot Gas Reheat mode will provide neutral air for maximum dehumidification operation.

NOTE: Humidi-MiZer system includes Low Ambient controller.

Thru-the-base connections

Thru-the-base connections, available as a factory option, are necessary to ensure proper connection and seal when routing wire and piping through the rooftop's basepan and curb. These couplings eliminate roof penetration and should be considered for gas lines, main power lines, as well as control power.

Hinged access panels

Allows access to unit's major components with specifically designed hinged access panels. Panels are filter, control box access indoor fan motor access.

Cu/Cu (indoor) coils

Copper fins and copper tubes are mechanically bonded to copper tubes and copper tube sheets. A polymer strip prevents coil assembly from contacting the sheet metal coil pan to minimize potential for galvanic corrosion between coil and pan.

E-coated (outdoor and indoor) coils

A flexible epoxy polymer coating uniformly applied to all coil surface areas without material bridging between fins. Coating process shall ensure complete coil encapsulation of tubes, fins and headers.

Pre-coated outdoor coils

A durable epoxy-phenolic coating to provide protection in mildly corrosive coastal environments. The coating minimizes galvanic action between dissimilar metals. Coating is applied to the aluminum fin stock prior to the fin stamping process to create an inert barrier between the aluminum fin and copper tube.

Condenser coil hail guard

Sleek, louvered panels protect the condenser coil from hail damage, foreign objects, and incidental contact.

Single enthalpy sensor

Prevents the wheel from rotating if the outside air conditions are acceptable for free cooling. Both exhaust and supply blowers will remain on.

Stainless steel heat exchanger (48FC units only)

The stainless steel heat exchanger option provides the tubular heat exchanger be made out of a minimum 20 gage type 409 stainless steel for applications where the mixed air to the heat exchanger is expected to drop below 45°F (7°C). Stainless steel may be specified on applications where the presence of airborne contaminants require its use (applications such as paper mills) or in area with very high outdoor humidity that may result in severe condensation in the heat exchanger during cooling operation.

Convenience outlet (powered or un-powered)

Reduce service and/or installation costs by including a convenience outlet in your specification. Carrier will install this service feature at our factory. Provides a convenient, 15 amp, 115v GFCI receptacle with "Wet in Use" cover. The "powered" option allows the installer to power the outlet from the line side of the disconnect or load side as

required by code. The "unpowered" option is to be powered from a separate 115/120v power source.

The unpowered convenience outlet is available as a 15 amp factory-installed option or a 20 amp field-installed accessory.

Non-fused disconnect

This OSHA-compliant, factory-installed, safety switch allows a service technician to locally secure power to the rooftop. When selecting a factory-installed non-fused disconnect, note they are sized for the unit as ordered from the factory. The sizing of these do not accommodate field-installed items such as power exhaust devices, etc. If field installing electric heat with factory-installed non-fused disconnect switch, a single point kit may or may not be required.

SystemVu™ controller

Carrier's SystemVu controller is an optional factory-installed and tested controller.

This controller takes on a whole new approach to provide an intuitive, intelligent controller that not only monitors and controls the unit, but also provides linkage to multiple building automation systems.

Each SystemVu controller makes it easy to set up, service, troubleshoot, gain historical data, generate reports and provide comfort only Carrier is noted for.

Key features include:

- Easy to read back lit four line text screen for superior visibility.
- Quick operational condition LEDs of: Run, Alert, and Fault.
- Simple navigation with large keypad buttons of: Navigation arrows, Test, Back, Enter and Menu.
- Capable of being controlled with a conventional thermostat, space sensor or build automation system.
- Service capabilities include:
  Auto run test
  Manual run test
  Component run hours and starts
  Commissioning reports
  Data logging
- Full range of diagnosis:
  Read refrigerant pressures without the need of gages
  Sensor faults
  Compressor reverse rotation
  Economizer diagnostics that meet California Title 24 requirements
- Quick data transfer via USB port:
  Unit configuration uploading/downloading
  Data logging
  Software upgrades
- Built in capacity for:
  i-Vu® open systems
  BACnet systems
  CCN systems
- Configuration and alarm point capability:
  Contain over 100 alarm codes
  Contain over 260 status, troubleshooting, diagnostic and maintenance points
  Contain over 270 control configuration setpoints

RTU Open, multi-protocol controller

Connect the rooftop to an existing BAS (building automation system) without needing complicated translators or adapter modules using the RTU Open controller. The RTU Open controller speaks the 4 most common building automation system languages (BACnet, Modbus, Johnson Controls N2, and LonWorks). Use this controller when you have an existing BAS. Besides the 4 protocols, it also communicates with a Carrier Open system (i-Vu and VVT®).

Condensate overflow switch

This sensor and related controller monitors the condensate level in the drain pan and shuts down compression operation when overflow conditions occur. It includes:

- Indicator light – solid red (more than 10 seconds on water contact – compressors disabled), blinking red (sensor disconnected)
- 10-second delay to break – eliminates nuisance trips from splashing or waves in pan (sensor needs 10 seconds of constant water contact before tripping)
- Disables the compressor(s) operation when condensate plug is detected, but still allows fans to run for economizer.

Power exhaust with barometric relief

Superior internal building pressure control. This field-installed accessory may eliminate the need for costly, external pressure control fans.

Field-installed accessories

Filter maintenance indicator

When the optional factory-installed filter maintenance indicator is used, a factory-installed differential pressure switch measures pressure drop across the outside air filter and activates a field-supplied dry contact indicator when the pressure differential exceeds the adjustable switch setpoint.

Condenser coil hail guard

Sleek, louvered panels protect the condenser coil from hail damage, foreign objects, and incidental contact. This can be purchased as a factory-installed option or as a field-installed accessory.

Differential enthalpy sensor

The differential enthalpy sensor is comprised of an outdoor and return air enthalpy sensors to provide differential enthalpy control. The sensor allows the unit to determine if outside air is suitable for free cooling.

Wall or duct mounted CO_2 sensor

The IAQ sensor shall be available in duct or wall mount. The sensor provides demand ventilation indoor air quality (IAQ) control.

Propane conversion kit (48FC units only)

Convert your gas heat rooftop from standard natural gas operation to Propane using this field-installed kit.

High altitude conversion kit (48FC units only)

High altitudes have less oxygen, which affects the fuel/air mixture in heat exchangers. In order to maintain a proper fuel/air mixture, heat exchangers operating in altitudes above 2000 ft (610 m) require different orifices. To select the correct burner orifices or determine the heat capacity for a high altitude application, use either the selection software, or the unit's service manual. High altitudes have less oxygen, which means heat exchangers need less fuel. The new gas orifices in this field-installed kit make the necessary adjustment for high altitude applications. They restore the optimal fuel to air mixture and maintain healthy combustion on altitudes above 2000 ft (610 m).

NOTE: Typical natural gas heating value ranges from 975 to 1050 Btu/ft^3 at sea level nationally. The heating value goes down approximately 1.7% per every thousand feet elevation. Standard factory orifices can typically be used up to 2000 ft (610 m) elevation without any operational issues.

Flue discharge deflector (48FC units only)

The flue discharge deflector is a useful accessory when flue gas recirculation is a concern. By venting the flue discharge upwards, the deflector minimizes the chance for a neighboring unit to intake the flue exhaust.

MERV-8 return air filters

This factory option upgrades the return air filters from standard unit filters to high efficiency MERV-8 filters. Non-woven MERV-8 filter media with high strength, moisture-resistant frame. Filter media is securely fasted inside the filter frame on all four sides.

Phase monitor protection

The Phase Monitor Control will monitor the sequence of three phase electrical system to provide a phase reversal protection; and monitor the three phase voltage inputs to provide a phase loss protection for the three phase device. It will work on either a Delta or Wye power connection.

Winter start kit

The winter start kit by Carrier extends the low ambient limit of your rooftop to 25°F (–4°C). The kit bypasses the low pressure switch, preventing nuisance tripping of the low pressure switch. Other low ambient precautions may still be prudent.

Low ambient controller

The low ambient controller is a head pressure controller kit that is designed to maintain the unit's condenser head pressure during periods of low ambient cooling operation. This device should be used as an alternative to economizer free cooling when economizer usage is either not appropriate or desired. The low ambient controller will either cycle the outdoor fan motors or operate them at reduced speed to maintain the unit operation, depending on the model. This controller allows cooling operation down to –20°F (–29°C) ambient conditions.

Roof curb (14-in./356 mm or 24-in./610 mm)

Full perimeter roof curb with exhaust capability provides separate air streams for energy recovery from the exhaust air without supply air contamination.

Filter status indicator accessory

Monitors static pressure across supply and exhaust filters and provides indication when filters become clogged.

Power exhaust

Superior internal building pressure control. This field-installed accessory may eliminate the need for costly, external pressure control fans.

Manual OA Damper

Manual outdoor air dampers are an economical way to bring in ventilation air. The dampers are available in 25% and 50% versions.

NOTE: See application tip "ROOFTOP-18-01" prior to use of this damper on 07 size models.

Motorized 2-Position Damper

The Carrier 2-position, motorized outdoor air damper admits up to 100% outside air. Using reliable, gear-driven technology, the 2-position damper opens to allow ventilation air and closes when the rooftop stops, stopping unwanted infiltration.

NOTE: See application tip "ROOFTOP-18-01" prior to use of this damper on 07 size models.

Electric Heaters

Carrier offers a full-line of field-installed accessory heaters. The heaters are very easy to use, install and are all pre-engineered and certified.

Time Guard II control circuit

This accessory protects your compressor by preventing short-cycling in the event of some other failure, prevents the compressor from restarting for 30 seconds after stopping. Not required with SystemVu™ controller, RTU Open controller, or authorized commercial thermostats.

OPTIONS AND ACCESSORY WEIGHTS

OPTION / ACCESSORY NAME	48/50FC UNIT WEIGHT							
	04		05		06		07	
	lb	kg	lb	kg	lb	kg	lb	kg
Humidi-MiZer® System*	15	7	15	7	15	7	24	11
Power Exhaust - vertical	51	23	51	23	51	23	51	23
Power Exhaust - horizontal	39	18	39	18	39	18	39	18
EconoMi$er® (X, IV or 2)	35	16	35	16	35	16	35	16
2-Position Damper	39	18	39	18	39	18	58	26
Manual Damper	12	5	12	5	12	5	18	8
Medium Gas Heat (48FC units only)	9	4	9	4	9	4	15	7
High Gas Heat (48FC units only)	—	—	63	29	63	29	63	29
Hail Guard (louvered)	13	6	13	6	13	6	17	8
Cu/Cu Condenser Coil	37	17	74	34	74	34	95	43
Cu/Cu Condenser and Evaporator Coils	75	34	112	51	112	51	165	75
Roof Curb (14-in. curb)	95	43	95	43	95	43	95	43
Roof Curb (24-in. curb)	150	68	150	68	150	68	150	68
CO_2 sensor	2	1	2	1	2	1	2	1
Flue Discharge Deflector	7	3	7	3	7	3	7	3
Optional Indoor Motor/Drive	10	5	10	5	10	5	15	7
Low Ambient Controller	9	4	9	4	9	4	9	4
Winter Start Kit	5	2	5	2	5	2	5	2
Return Air Smoke Detector	7	3	7	3	7	3	7	3
Supply Air Smoke Detector	7	3	7	3	7	3	7	3
Fan Filter Switch	2	1	2	1	2	1	2	1
Non-Fused Disconnect	15	7	15	7	15	7	15	7
Powered Convenience Outlet	36	16	36	16	36	16	36	16
Unpowered Convenience Outlet	4	2	4	2	4	2	4	2
Enthalpy Sensor	2	1	2	1	2	1	2	1
Differential Enthalpy Sensor	3	1	3	1	3	1	3	1

LEGEND
— Not Available
* For Humidi-MiZer system, add Low Ambient controller weight.
NOTE: Where multiple variations are available, the heaviest combination is listed.

Base unit dimensions

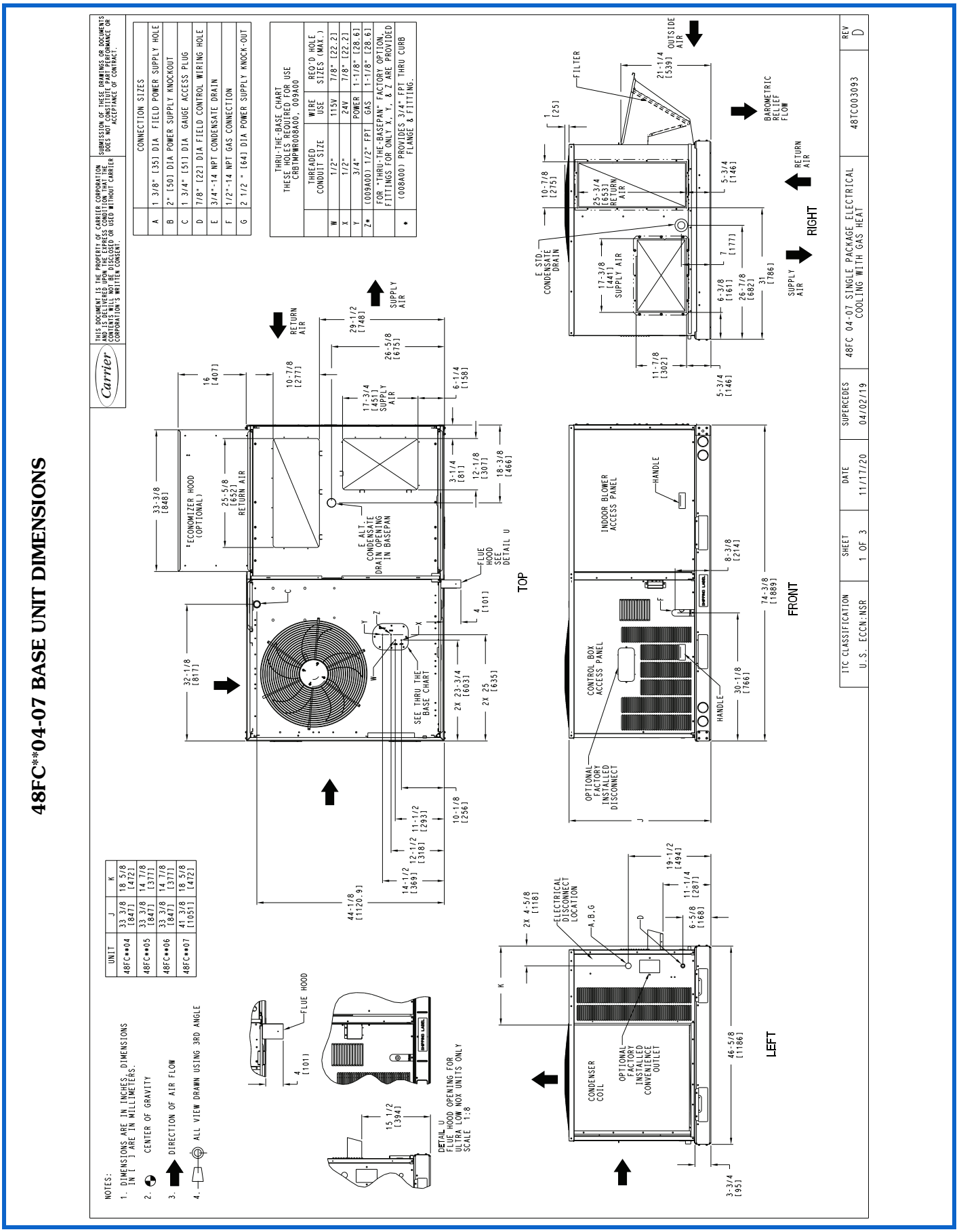

48FC**04-07 BASE UNIT DIMENSIONS (cont)

UNIT	STD. UNIT WEIGHT *		CORNER WEIGHT (A)		CORNER WEIGHT (B)		CORNER WEIGHT (C)		CORNER WEIGHT (D)		C.G.		HEIGHT
	LBS.	KG.	LBS.	KG.	LBS.	KG.	LBS.	KG.	LBS.	KG.	X	Y	Z
48FC**04	482	219	113	51	116	53	128	58	125	57	37 5/8 [956]	24 9/16 [624]	18 1/4 [464]
48FC**05	543	246	138	63	133	60	133	60	138	63	36 1/2 [927]	23 3/8 [594]	18 [457]
48FC**06	556	252	142	64	136	62	136	62	142	64	36 1/2 [927]	23 3/8 [594]	18 [457]
48FC**07	607	275	162	73	152	69	141	64	151	68	36 [914]	22 1/2 [572]	19 3/8 [492]

* STANDARD UNIT WEIGHT IS WITH LOW GAS HEAT AND WITHOUT PACKAGING.
FOR OTHER OPTIONS AND ACCESSORIES, REFER TO THE PRODUCT DATA CATALOG.

THIS TABLE IS FOR "ULTRA LOW NOX" UNITS ONLY

UNIT	STD. UNIT WEIGHT**		CORNER WEIGHT (A)		CORNER WEIGHT (B)		CORNER WEIGHT (C)		CORNER WEIGHT (D)		C.G.		HEIGHT
	LBS.	KG.	LBS.	KG.	LBS.	KG.	LBS.	KG.	LBS.	KG.	X	Y	Z
48FCG*04	512	233	120	55	122	55	136	62	134	61	37 1/2 [953]	24 11/16 [627]	18 1/8 [460]
48FCG*05	573	260	146	66	139	63	141	64	147	67	36 3/8 [924]	23 1/2 [597]	18 [457]
48FCG*06	586	266	149	68	143	65	144	65	151	69	36 3/8 [924]	23 1/2 [597]	18 [457]

** STANDARD UNIT WEIGHT IS WITH WITHOUT PACKAGING.
FOR OTHER OPTIONS AND ACCESSORIES, REFER TO THE PRODUCT DATA CATALOG.

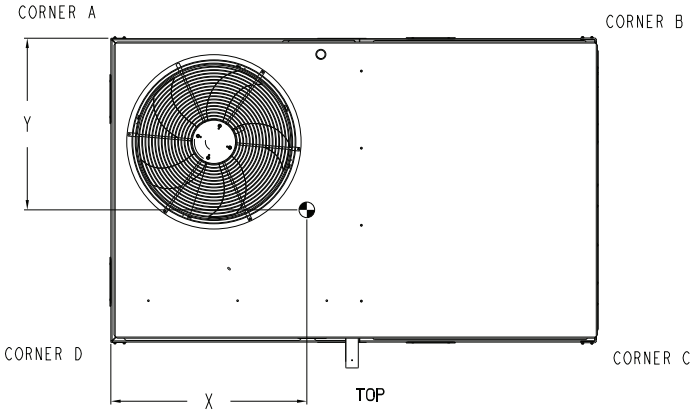

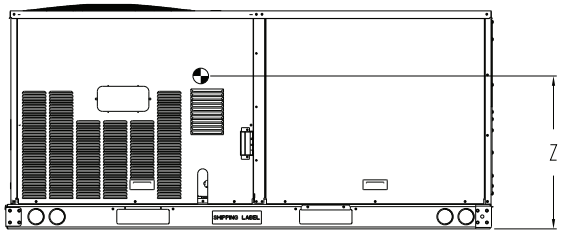

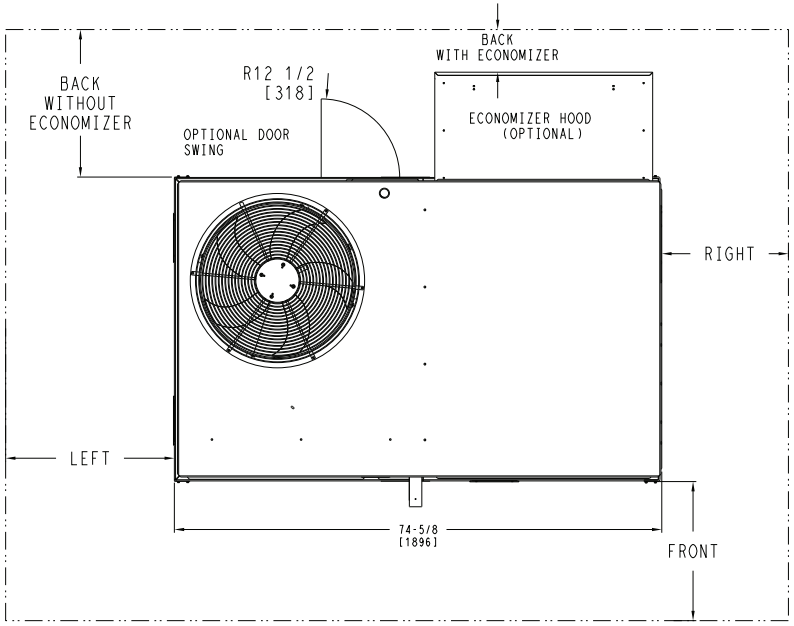

NOTES:

1. FOR ALL MINIMUM CLEARANCES LOCAL CODES OR JURISDICTIONS MAY PREVAIL.

CLEARANCE			
	SERVICE WITH:	SERVICE WITH:	OPERATING
SURFACE	CONDUCTIVE BARRIER	NONCONDUCTIVE BARRIER	CLEARANCE
FRONT	48 [1219mm]	36 [914mm]	18 [457mm]
LEFT	48 [1219mm]	42 [1067mm]	18 [457mm]
BACK W/O HOOD	48 [1219mm]	42 [1067mm]	18 [457mm]
BACK W/HOOD	36 [914mm]	36 [914mm]	18 [457mm]
RIGHT	36 [914mm]	36 [914mm]	18 [457mm]
TOP	72 [1829mm]	72 [1829mm]	72 [1829mm]

Carrier
THIS DOCUMENT IS THE PROPERTY OF CARRIER CORPORATION AND IS DELIVERED UPON THE EXPRESS CONDITION THAT THE CONTENTS WILL NOT BE DISCLOSED OR USED WITHOUT CARRIER CORPORATION'S WRITTEN CONSENT.
SUBMISSION OF THESE DRAWINGS OR DOCUMENTS DOES NOT CONSTITUTE PART PERFORMANCE OR ACCEPTANCE OF CONTRACT.

ITC CLASSIFICATION	SHEET	DATE	SUPERCEDES			REV
U.S. ECCN:NSR	2 OF 3	11/17/20	04/02/19	48FC 04-07 SINGLE PACKAGE ELECTRICAL COOLING WITH GAS HEAT	48TC003093	D

48FC**04-07 BASE UNIT DIMENSIONS (cont)

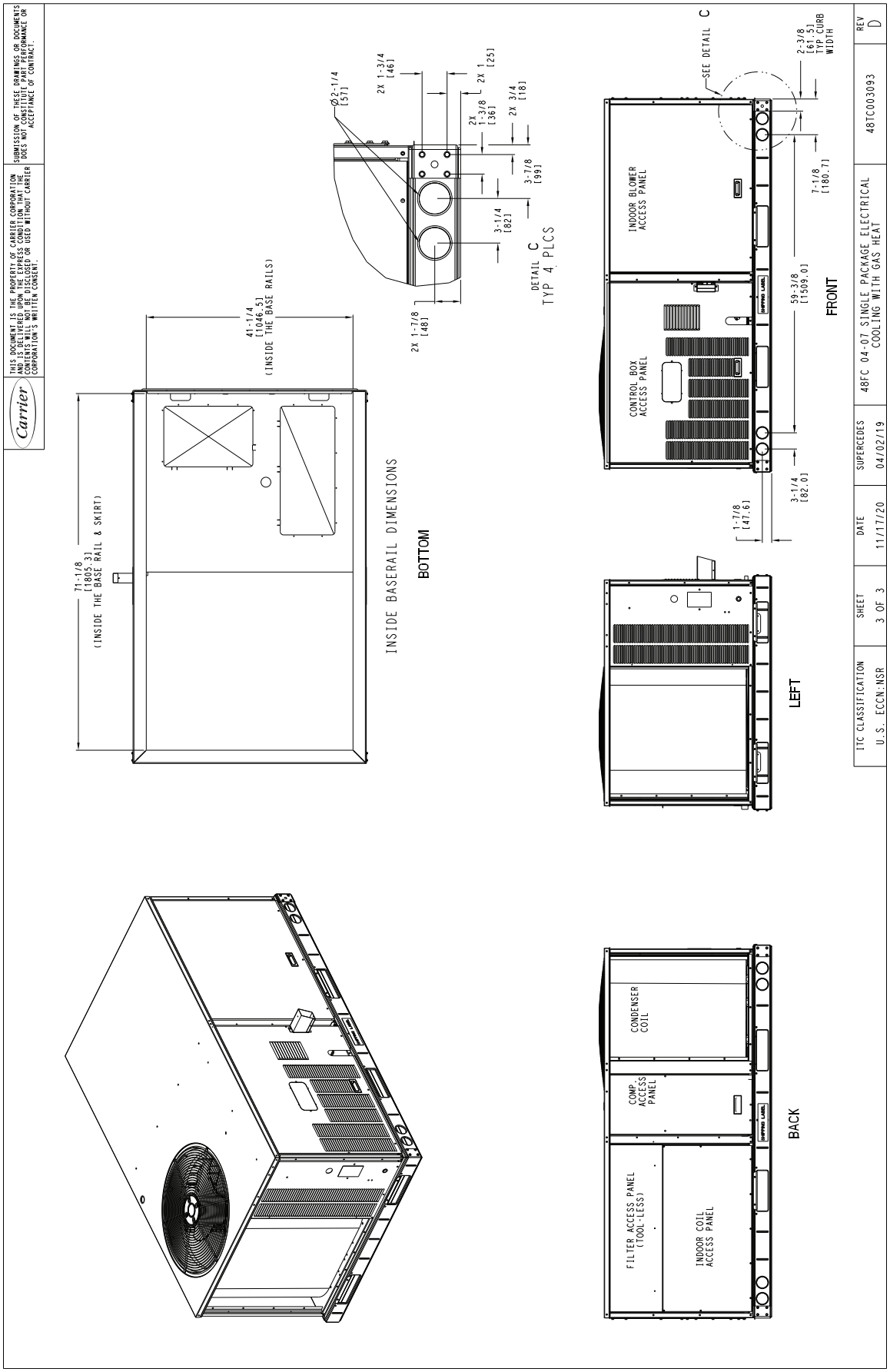

50FC**04-07 BASE UNIT DIMENSIONS

NOTES:

1. DIMENSIONS ARE IN INCHES, DIMENSIONS IN [ ] ARE IN MILLIMETERS.
2. CENTER OF GRAVITY
3. DIRECTION OF AIR FLOW
4. ALL VIEW DRAWN USING 3RD ANGLE

UNIT	J	K
50FC**04	33 3/8 [847]	18 5/8 [472]
50FC**05	33 3/8 [847]	14 7/8 [377]
50FC**06	33 3/8 [847]	14 7/8 [377]
50FC**07	41 3/8 [1051]	18 5/8 [472]

Carrier United Technologies

THIS DOCUMENT IS THE PROPERTY OF UTC CLIMATE, CONTROLS & SECURITY AND IS DELIVERED UPON THE EXPRESS CONDITION THAT THE CONTENTS WILL NOT BE DISCLOSED OR USED WITHOUT WRITTEN CONSENT.

SUBMISSION OF THESE DRAWINGS OR DOCUMENTS DOES NOT CONSTITUTE PART PERFORMANCE OR ACCEPTANCE OF CONTRACT.

	CONNECTION SIZES
A	1 3/8" [35] DIA FIELD POWER SUPPLY HOLE
B	2" [51] DIA POWER SUPPLY KNOCKOUT
C	1 3/4" [44] DIA GAUGE ACCESS PLUG
D	7/8" [22] DIA FIELD CONTROL WIRING HOLE
E	3/4"-14 NPT CONDENSATE DRAIN
G	2 1/2 " [64] DIA POWER SUPPLY KNOCK-OUT

THRU-THE-BASE CHART THESE HOLES REQUIRED FOR USE CRBTMPWR008A00, 009A00			
	THREADED CONDUIT SIZE	WIRE USE	REQ'D HOLE SIZES (MAX.)
W	1/2"	115V	7/8" [22.2]
X	1/2"	24V	7/8" [22.2]
Y *	3/4"	POWER	1 1/8" [28.6]
Z**	(009A00) 1/2" FPT	GAS	1 1/8" [28.6]
	FOR "THRU-THE-BASEPAN" FACTORY OPTION, FITTINGS FOR ONLY X,Y, & Z ARE PROVIDED		
*	SELECT EITHER 3/4" OR 1/2" FOR POWER, DEPENDING ON WIRE SIZE		
**	(008A00) PROVIDES 3/4" FPT THRU CURB FLANGE & FITTING.		

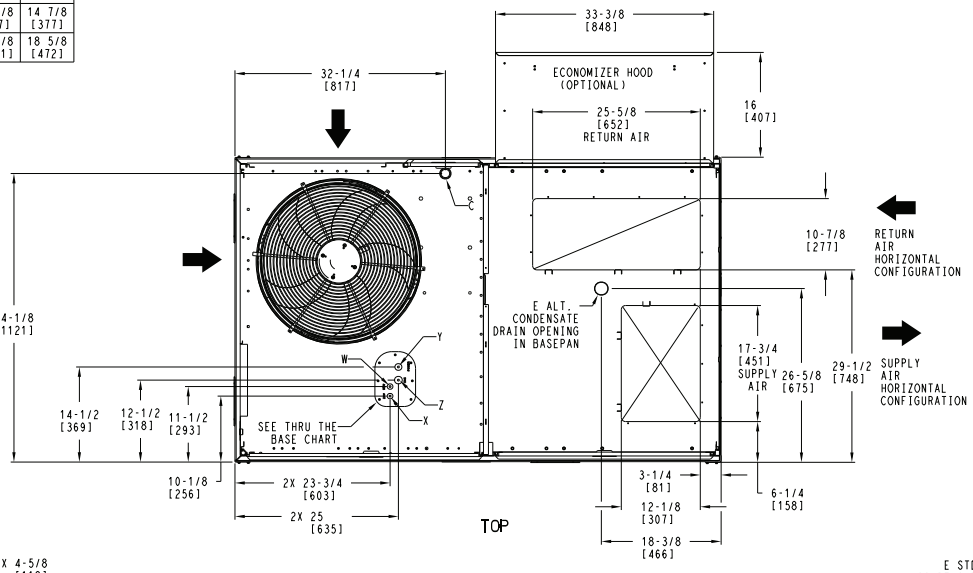

TOP

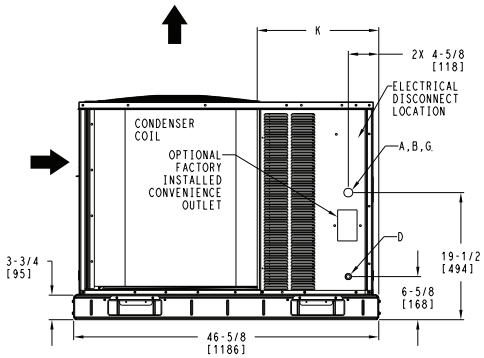

LEFT

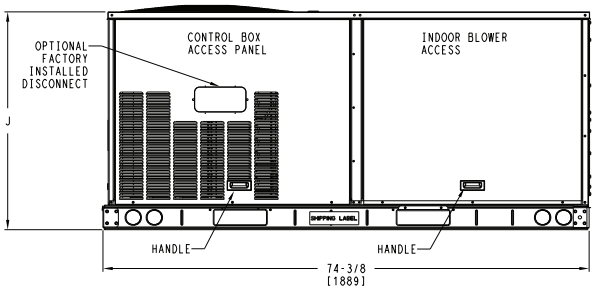

FRONT

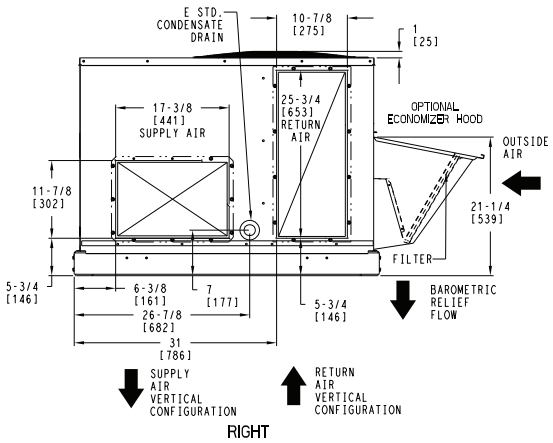

RIGHT

ITC CLASSIFICATION	SHEET	DATE	SUPERCEDES			REV
U.S. ECCN:NSR	1 OF 3	04/02/19	10/25/18	50FC 04-07 SINGLE PACKAGE ELECTRICAL COOLING WITH ELECTRIC HEAT	48TC003094	C

50FC**04-07 BASE UNIT DIMENSIONS (cont)

UNIT	STD. UNIT WEIGHT*		CORNER WEIGHT (A)		CORNER WEIGHT (B)		CORNER WEIGHT (C)		CORNER WEIGHT (D)		C.G.		HEIGHT
	LBS.	KG.	LBS.	KG.	LBS.	KG.	LBS.	KG.	LBS.	KG.	X	Y	Z
50FC**04	437	198	110	50	107	49	108	49	112	51	36 5/8 [930]	23 9/16 [598]	18 1/2 [470]
50FC**05	498	226	136	62	124	56	114	52	125	57	35 1/2 [902]	22 3/8 [568]	18 1/4 [464]
50FC**06	511	232	139	63	127	58	117	53	128	58	35 1/2 [902]	22 3/8 [568]	18 1/4 [464]
50FC**07	562	255	154	70	137	62	127	58	143	65	35 [889]	22 1/2 [572]	19 1/2 [495]

* STANDARD UNIT WEIGHT IS WITHOUT ELECTRIC HEAT AND WITHOUT PACKAGING.
FOR OTHER OPTIONS AND ACCESSORIES, REFER TO THE PRODUCT DATA CATALOG.

Carrier United Technologies
THIS DOCUMENT IS THE PROPERTY OF UTC CLIMATE, CONTROLS & SECURITY AND IS DELIVERED UPON THE EXPRESS CONDITION THAT THE CONTENTS WILL NOT BE DISCLOSED OR USED WITHOUT WRITTEN CONSENT.
SUBMISSION OF THESE DRAWINGS OR DOCUMENTS DOES NOT CONSTITUTE PART PERFORMANCE OR ACCEPTANCE OF CONTRACT.

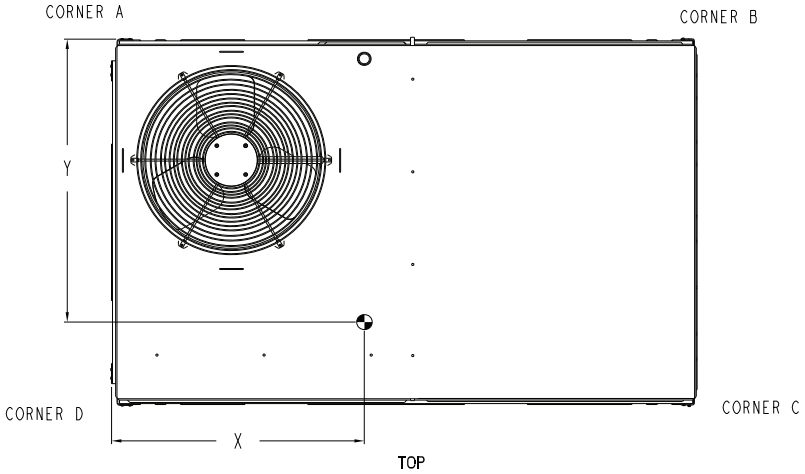

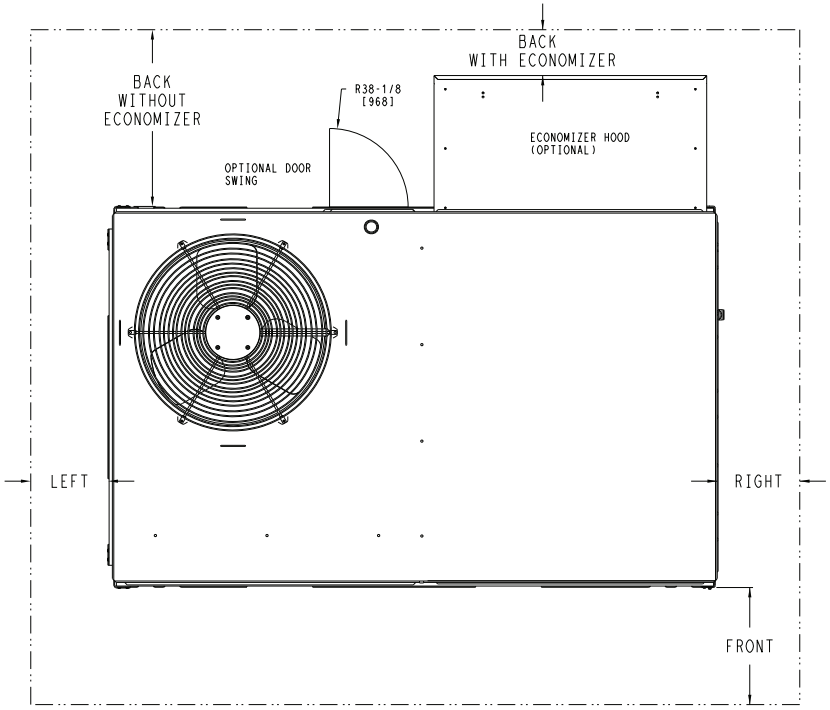

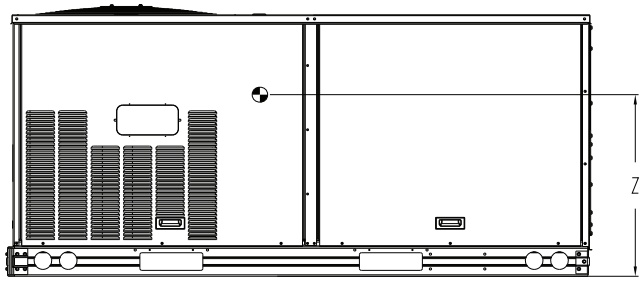

NOTE:

1. FOR ALL MINIMUM CLEARANCES LOCAL CODES OR JURISDICTIONS MAY PREVAIL.

CLEARANCE			
	SERVICE WITH:	SERVICE WITH:	OPERATING
SURFACE	CONDUCTIVE BARRIER	NONCONDUCTIVE BARRIER	CLEARANCE
FRONT	48 [1219mm]	36 [914mm]	18 [457mm]
LEFT	48 [1219mm]	42 [1067mm]	18 [457mm]
BACK W/O HOOD	48 [1219mm]	42 [1067mm]	18 [457mm]
BACK W/ HOOD	36 [914mm]	36 [914mm]	18 [457mm]
RIGHT	36 [914mm]	36 [914mm]	18 [457mm]
TOP	72 [1829mm]	72 [1829mm]	72 [1829mm]

ITC CLASSIFICATION	SHEET	DATE	SUPERCEDES			REV
U.S. ECCN:NSR	2 OF 3	04/02/19	10/25/18	50FC 04-07 SINGLE PACKAGE ELECTRICAL COOLING WITH ELECTRIC HEAT	48TC003094	C

50FC**04-07 BASE UNIT DIMENSIONS (cont)

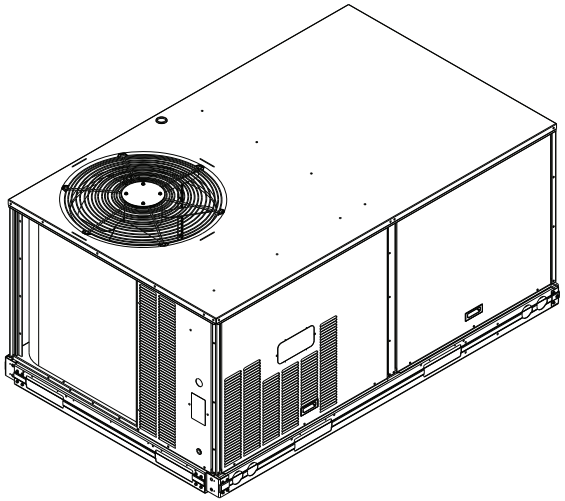

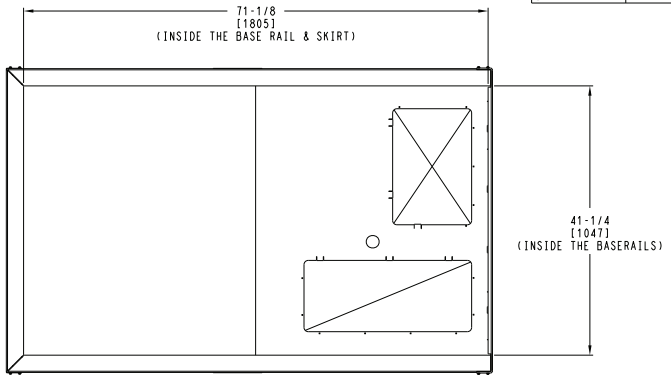

INSIDE BASERAIL DIMENSIONS

BOTTOM

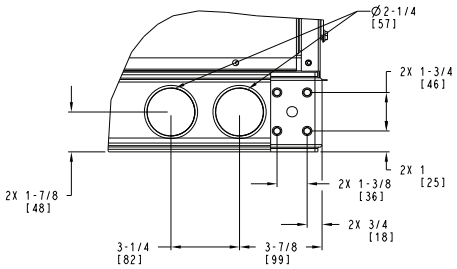

DETAIL C
TYP 4 PLCS

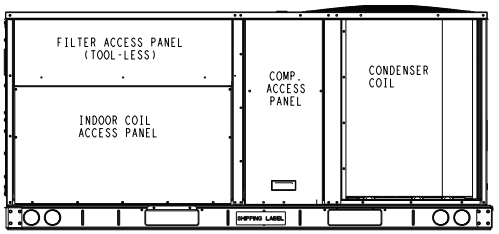

BACK

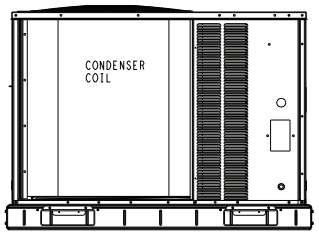

LEFT

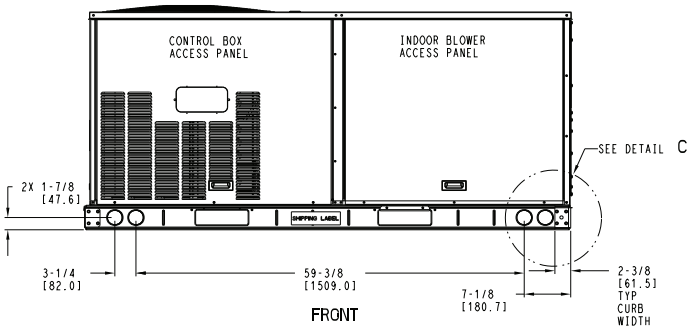

FRONT

Carrier
United Technologies

THIS DOCUMENT IS THE PROPERTY OF UTC CLIMATE, CONTROLS & SECURITY AND IS DELIVERED UPON THE EXPRESS CONDITION THAT THE CONTENTS WILL NOT BE DISCLOSED OR USED WITHOUT WRITTEN CONSENT.

SUBMISSION OF THESE DRAWINGS OR DOCUMENTS DOES NOT CONSTITUTE PART PERFORMANCE OR ACCEPTANCE OF CONTRACT.

ITC CLASSIFICATION	SHEET	DATE	SUPERCEDES			REV
U.S. ECCN:NSR	3 OF 3	04/02/19	10/25/18	50FC 04-07 SINGLE PACKAGE ELECTRICAL COOLING WITH ELECTRIC HEAT	48TC003094	C

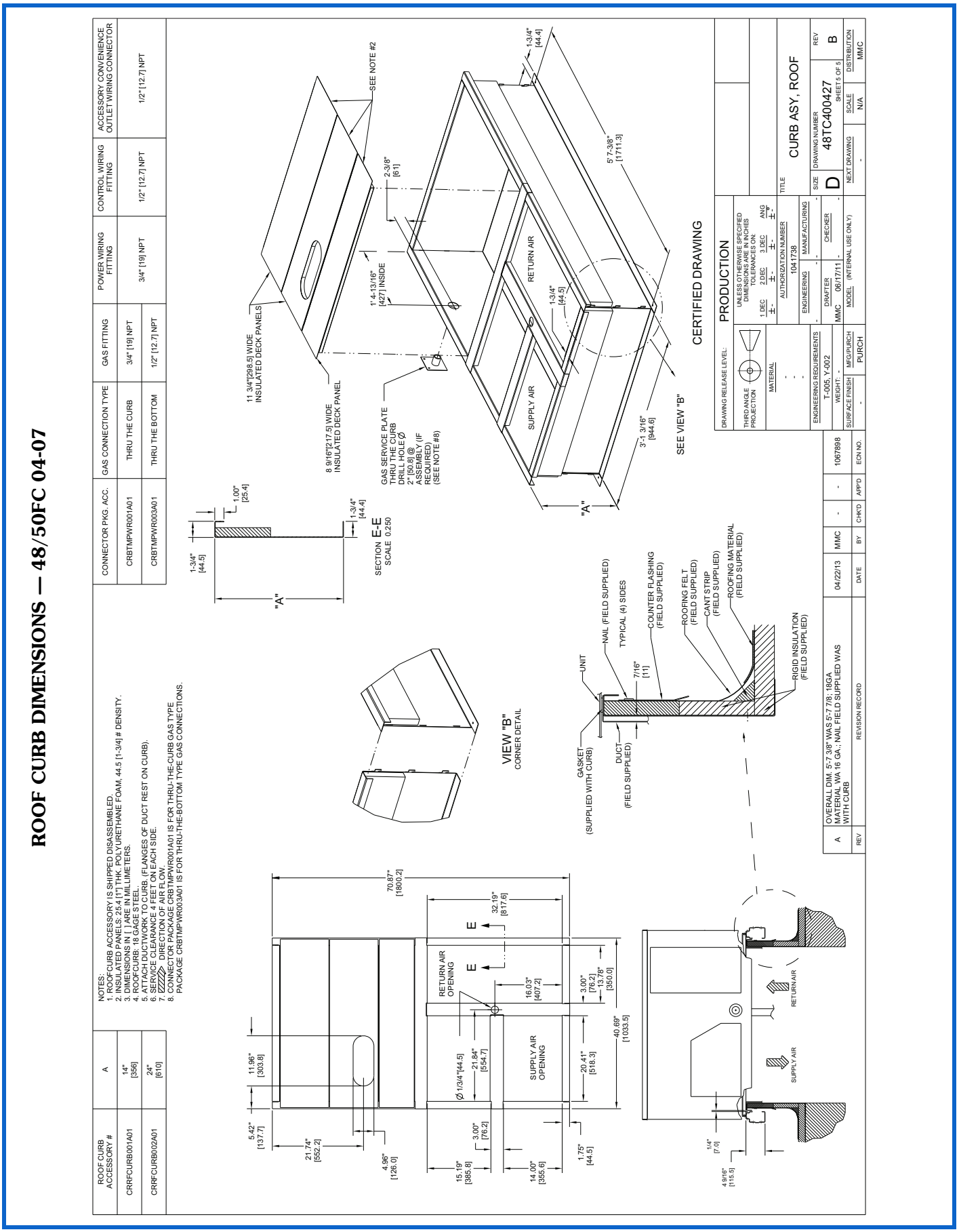
ROOF CURB DIMENSIONS — 48/50FC 04-07
ROOF CURB ACCESSORY #
A
CRRFCURB001A01
14" [356]
CRRFCURB002A01
24" [610]
NOTES:
1. ROOF CURB ACCESSORY IS SHIPPED DISASSEMBLED.
2. INSULATED PANELS: 25.4 [1"] THK. POLYURETHANE FOAM, 44.5 [1-3/4] # DENSITY.
3. DIMENSIONS IN [ ] ARE IN MILLIMETERS.
4. ROOF CURB IS 16 GAUGE STEEL.
5. ATTACH DUCTWORK TO CURB. (FLANGES OF DUCT REST ON CURB).
6. SERVICE CLEARANCE 4 FEET ON EACH SIDE.
7. DIRECTION OF AIR FLOW.
8. CONNECTOR PACKAGE CRBTMPWR001A01 IS FOR THRU-THE-CURB GAS TYPE PACKAGE CRBTMPWR003A01 IS FOR THRU-THE-BOTTOM TYPE GAS CONNECTIONS.
CONNECTOR PKG. ACC.
GAS CONNECTION TYPE
GAS FITTING
POWER WIRING FITTING
CONTROL WIRING FITTING
ACCESSORY CONVENIENCE OUTLET WIRING CONNECTOR
CRBTMPWR001A01
THRU THE CURB
3/4" [19] NPT
3/4" [19] NPT
1/2" [12.7] NPT
1/2" [12.7] NPT
CRBTMPWR003A01
THRU THE BOTTOM
1/2" [12.7] NPT
SEE NOTE #2
11 3/4"[298.5] WIDE INSULATED DECK PANELS
8 9/16"[217.5] WIDE INSULATED DECK PANEL
GAS SERVICE PLATE THRU THE CURB DRILL HOLE Ø 2" [50.8] @ ASSEMBLY (IF REQUIRED) (SEE NOTE #8)
1'-4-13/16" [427] INSIDE
2-3/8" [61]
1-3/4" [44.4]
5'-7-3/8" [1711.3]
RETURN AIR
SUPPLY AIR
1-3/4" [44.5]
3'-1 3/16" [944.6]
"A"
SEE VIEW "B"
CERTIFIED DRAWING
DRAWING RELEASE LEVEL: PRODUCTION
THIRD ANGLE PROJECTION
MATERIAL
UNLESS OTHERWISE SPECIFIED DIMENSIONS ARE IN INCHES TOLERANCES ON: 1 DEC ± 2 DEC ± 3 DEC ± ANG ±°
AUTHORIZATION NUMBER 1041738
ENGINEERING
MANUFACTURING
ENGINEERING REQUIREMENTS
T-005, Y-002
WEIGHT:
DRAFTER MMC 06/17/11
CHECKER
TITLE CURB ASY, ROOF
SIZE D
DRAWING NUMBER 48TC400427
SHEET 5 OF 5
REV B
NEXT DRAWING
SCALE N/A
DISTRIBUTION MMC
SURFACE FINISH
MFG/PURCH PURCH
MODEL (INTERNAL USE ONLY)
EON NO.
1067898
APP'D
CHK'D
BY
DATE
REVISION RECORD
REV
A
OVERALL DIM. 5'-7 3/8" WAS 5'-7 7/8; 18GA MATERIAL WA 16 GA.; NAIL FIELD SUPPLIED WAS WITH CURB
04/22/13
MMC
SECTION E-E SCALE 0.250
1.00" [25.4]
1-3/4" [44.4]
1-3/4" [44.5]
"A"
VIEW "B" CORNER DETAIL
GASKET (SUPPLIED WITH CURB)
UNIT
NAIL (FIELD SUPPLIED)
TYPICAL (4) SIDES
7/16" [11]
COUNTER FLASHING (FIELD SUPPLIED)
DUCT (FIELD SUPPLIED)
ROOFING FELT (FIELD SUPPLIED)
CANT STRIP (FIELD SUPPLIED)
ROOFING MATERIAL (FIELD SUPPLIED)
RIGID INSULATION (FIELD SUPPLIED)
70.87" [1800.2]
32.19" [817.6]
E
E
RETURN AIR OPENING
16.03" [407.2]
3.00" [76.2]
13.78" [350.0]
40.69" [1033.5]
11.96" [303.8]
5.42" [137.7]
21.74" [552.2]
4.96" [126.0]
Ø 1/3/4"[44.5]
21.84" [554.7]
SUPPLY AIR OPENING
20.41" [518.3]
15.19" [385.8]
3.00" [76.2]
14.00" [355.6]
1.75" [44.5]
RETURN AIR
SUPPLY AIR
1/4" [7.0]
4 9/16" [115.5]

48/50FC**04 SINGLE STAGE COOLING CAPACITIES

48/50FC**04				AMBIENT TEMPERATURE (F)											
				85			95			105			115		
				EAT (db)			EAT (db)			EAT (db)			EAT (db)		
				75	80	85	75	80	85	75	80	85	75	80	85
900 Cfm	EAT (wb)	58	TC	28.6	28.6	32.5	27.0	27.0	30.7	25.2	25.2	28.6	23.2	23.2	26.4
			SHC	24.7	28.6	32.5	23.3	27.0	30.7	21.7	25.2	28.6	20.0	23.2	26.4
		62	TC	31.1	31.1	31.1	28.9	28.9	29.8	26.3	26.3	28.6	23.6	23.6	27.2
			SHC	22.4	26.6	30.9	21.3	25.6	29.8	20.2	24.4	28.6	18.8	23.0	27.2
		67	TC	35.2	35.2	35.2	33.0	33.0	33.0	30.4	30.4	30.4	27.5	27.5	27.5
			SHC	18.7	23.0	27.2	17.8	22.0	26.3	16.7	20.9	25.2	15.5	19.8	24.0
		72	TC	38.9	38.9	38.9	37.2	37.2	37.2	34.8	34.8	34.8	31.9	31.9	31.9
			SHC	14.7	19.0	23.3	14.0	18.3	22.6	13.1	17.3	21.6	12.0	16.3	20.5
		76	TC	—	41.5	41.5	—	40.0	40.0	—	38.0	38.0	—	35.4	35.4
			SHC	—	15.6	20.5	—	15.1	20.0	—	14.3	19.1	—	13.3	17.8
1050 Cfm	EAT (wb)	58	TC	30.5	30.5	34.7	28.8	28.8	32.7	26.9	26.9	30.6	24.8	24.8	28.2
			SHC	26.4	30.5	34.7	24.8	28.8	32.7	23.2	26.9	30.6	21.4	24.8	28.2
		62	TC	32.4	32.4	33.9	30.0	30.0	32.7	27.4	27.4	31.3	24.8	24.8	29.3
			SHC	24.2	29.1	33.9	23.1	27.9	32.7	21.8	26.6	31.3	20.2	24.8	29.3
		67	TC	36.5	36.5	36.5	34.2	34.2	34.2	31.5	31.5	31.5	28.5	28.5	28.5
			SHC	19.8	24.6	29.4	19.0	23.8	28.7	17.9	22.7	27.6	16.7	21.5	26.4
		72	TC	40.0	40.0	40.0	38.3	38.3	38.3	35.9	35.9	35.9	33.0	33.0	33.0
			SHC	15.1	19.9	24.7	14.5	19.3	24.1	13.6	18.5	23.3	12.5	17.4	22.3
		76	TC	—	42.5	42.5	—	40.9	40.9	—	39.0	39.0	—	—	—
			SHC	—	16.3	22.0	—	15.7	21.4	—	14.9	20.2	—	—	—
1200 Cfm	EAT (wb)	58	TC	32.1	32.1	36.5	30.3	30.3	34.4	28.3	28.3	32.2	26.1	26.1	29.7
			SHC	27.8	32.1	36.5	26.2	30.3	34.4	24.4	28.3	32.2	22.5	26.1	29.7
		62	TC	33.3	33.3	36.6	30.9	30.9	35.3	28.4	28.4	33.5	26.1	26.1	30.9
			SHC	25.8	31.2	36.6	24.6	29.9	35.3	23.2	28.4	33.5	21.3	26.1	30.9
		67	TC	37.4	37.4	37.4	35.1	35.1	35.1	32.4	32.4	32.4	29.2	29.2	29.2
			SHC	20.7	25.9	31.2	20.0	25.4	30.8	18.9	24.4	29.8	17.7	23.1	28.6
		72	TC	40.7	40.7	40.7	39.0	39.0	39.0	36.7	36.7	36.7	33.8	33.8	33.8
			SHC	15.4	20.6	25.9	14.8	20.1	25.4	14.0	19.4	24.8	12.9	18.4	23.8
		76	TC	—	43.2	43.2	—	41.5	41.5	—	39.7	39.7	—	—	—
			SHC	—	16.7	23.0	—	16.0	22.1	—	15.3	21.2	—	—	—
1350 Cfm	EAT (wb)	58	TC	33.5	33.5	38.1	31.6	31.6	35.9	29.5	29.5	33.5	27.2	27.2	30.9
			SHC	28.9	33.5	38.1	27.3	31.6	35.9	25.4	29.5	33.5	23.4	27.2	30.9
		62	TC	34.1	34.1	38.9	31.7	31.7	37.5	29.5	29.5	34.9	27.2	27.2	32.2
			SHC	27.1	33.0	38.9	25.9	31.7	37.5	24.1	29.5	34.9	22.2	27.2	32.2
		67	TC	38.0	38.0	38.0	35.8	35.8	35.8	33.0	33.0	33.0	29.8	29.8	30.6
			SHC	21.4	27.1	32.8	20.8	26.8	32.7	19.8	25.9	31.9	18.6	24.6	30.6
		72	TC	41.2	41.2	41.2	39.5	39.5	39.5	37.3	37.3	37.3	34.3	34.3	34.3
			SHC	15.6	21.3	26.9	15.0	20.7	26.5	14.3	20.2	26.1	13.2	19.2	25.3
		76	TC	—	43.7	43.7	—	41.9	41.9	—	40.0	40.0	—	—	—
			SHC	—	17.0	23.6	—	16.3	22.7	—	15.6	21.9	—	—	—
1500 Cfm	EAT (wb)	58	TC	34.5	34.5	39.2	32.7	32.7	37.1	30.5	30.5	34.6	28.1	28.1	31.9
			SHC	29.8	34.5	39.2	28.2	32.7	37.1	26.3	30.5	34.6	24.2	28.1	31.9
		62	TC	35.1	35.1	39.1	32.7	32.7	38.7	30.5	30.5	36.1	28.1	28.1	33.3
			SHC	27.4	33.3	39.1	26.7	32.7	38.7	24.9	30.5	36.1	22.9	28.1	33.3
		67	TC	38.4	38.4	38.4	36.3	36.3	36.3	33.4	33.4	33.8	30.1	30.1	32.5
			SHC	22.1	28.2	34.3	21.6	28.0	34.4	20.6	27.2	33.8	19.4	26.0	32.5
		72	TC	41.6	41.6	41.6	39.8	39.8	39.8	37.7	37.7	37.7	34.7	34.7	34.7
			SHC	15.7	21.8	27.8	15.1	21.3	27.4	14.4	20.8	27.2	13.5	20.0	26.5
		76	TC	—	44.0	44.0	—	42.2	42.2	—	40.2	40.2	—	—	—
			SHC	—	17.2	24.1	—	16.5	23.3	—	15.8	22.5	—	—	—

LEGEND

— — Do Not Operate
Cfm — Cubic Feet Per Minute (Supply Air)
EAT (db) — Entering Air Temperature (dry bulb)
EAT (wb) — Entering Air Temperature (wet bulb)
SHC — Sensible Heat Capacity (1000 Btuh) Gross
TC — Total Capacity (1000 Btuh) Gross

NOTE: See minimum-maximum airflow ratings on page 8.

48/50FC*B04 — UNIT WITH HUMIDI-MIZER® SYSTEM IN SUBCOOLING MODE — COOLING CAPACITIES

TEMP (F) AIR ENTERING CONDENSER (Edb)		AIR ENTERING EVAPORATOR — SCFM/BF								
		900 / 0.01			1200 / 0.02			1500 / 0.04		
		Air Entering Evaporator — Ewb (F)								
		72	67	62	72	67	62	72	67	62
75	TC	29.90	31.00	30.90	29.80	32.50	33.30	33.80	30.90	26.70
	SHC	14.70	19.40	25.50	24.30	19.80	14.90	13.60	17.70	21.20
	kW	2.51	2.49	2.42	2.82	2.74	2.68	3.09	3.01	2.88
85	TC	31.90	27.50	22.70	18.10	23.10	28.40	23.80	18.30	13.20
	SHC	10.70	14.20	17.40	13.00	10.00	6.90	2.60	5.50	8.40
	kW	3.36	3.23	3.06	3.62	3.41	3.24	3.79	3.58	3.39
95	TC	30.30	31.00	30.90	29.80	32.50	33.30	33.80	30.90	26.70
	SHC	14.80	19.40	25.50	24.30	19.80	14.90	13.60	17.70	21.20
	kW	2.53	2.49	2.41	2.82	2.74	2.68	3.09	3.01	2.88
105	TC	31.90	27.50	22.70	18.10	23.10	28.40	23.80	18.30	13.20
	SHC	10.70	14.20	17.40	13.00	10.00	6.90	2.60	5.50	8.40
	kW	3.36	3.23	3.06	3.62	3.41	3.24	3.79	3.58	3.39
115	TC	30.30	31.00	30.90	29.80	32.50	33.30	33.80	30.90	26.70
	SHC	14.80	19.40	25.50	24.30	19.80	14.90	13.60	17.70	21.20
	kW	2.53	2.49	2.41	2.82	2.74	2.68	3.09	3.01	2.88
125	TC	31.90	27.50	22.70	18.10	23.10	28.40	23.80	18.30	13.2
	SHC	10.70	14.20	17.40	0.00	10.00	6.90	2.60	5.50	8.40
	kW	3.36	3.23	3.06	3.62	3.41	3.24	3.79	3.58	3.39

48/50FC*B04 — UNIT WITH HUMIDI-MIZER SYSTEM IN HOT GAS REHEAT MODE — COOLING CAPACITIES

TEMP (F) AIR ENTERING CONDENSER (Edb)		AIR ENTERING EVAPORATOR — Ewb (F)								
		75 Dry Bulb 62.5 Wet Bulb (50% Relative)			75 Dry Bulb 64 Wet Bulb (56% Relative)			75 Dry Bulb 65.3 Wet Bulb (60% Relative)		
		Air Entering Evaporator — Cfm								
		900	1200	1500	900	1200	1500	900	1200	1500
80	TC	9.81	10.50	10.92	10.83	11.58	12.00	11.78	12.50	12.96
	SHC	1.41	3.09	4.87	0.60	1.98	3.47	-0.05	1.04	2.25
	kW	1.92	1.93	1.94	1.96	1.98	2.00	2.00	2.01	2.02
75	TC	11.71	12.51	13.04	12.67	13.38	13.86	13.44	13.91	14.32
	SHC	3.10	4.87	6.70	2.30	3.67	5.03	1.62	2.51	3.51
	kW	1.87	1.88	1.88	1.89	1.90	1.91	1.91	1.92	1.93
70	TC	13.37	14.10	14.41	13.94	14.53	14.90	14.42	14.95	15.10
	SHC	4.71	6.28	7.52	3.72	4.86	5.88	2.97	4.07	4.47
	kW	1.78	1.80	1.82	1.81	1.83	1.84	1.82	1.82	1.86
60	TC	13.95	14.80	14.62	14.47	15.22	15.53	14.66	14.63	15.46
	SHC	6.20	8.05	7.61	5.67	6.67	7.68	5.03	5.55	6.30
	kW	1.66	1.62	1.70	1.67	1.69	1.68	1.69	1.70	1.71
50	TC	14.26	14.87	15.78	14.65	15.78	16.21	15.01	16.16	16.58
	SHC	5.12	6.39	8.04	3.83	5.37	6.38	2.72	4.09	4.93
	kW	1.98	2.03	1.94	2.01	1.94	1.97	2.03	1.96	1.99
40	TC	14.16	15.50	15.88	15.28	16.24	16.28	15.62	16.60	17.01
	SHC	5.04	6.99	8.14	4.43	5.81	6.44	3.31	4.51	5.34
	kW	2.07	1.95	1.99	1.93	1.91	2.02	1.96	1.94	1.97

LEGEND

Edb — Entering Dry Bulb
Ewb — Entering Wet Bulb
kW — Compressor Power Input
SCFM/BF — Standard Cubic Feet per Minute/Bypass Factor
SHC — Sensible Heat Capacity (1000 Btuh) Gross
TC — Total Capacity (1000 Btuh) Gross

48/50FC**05 SINGLE STAGE COOLING CAPACITIES

48/50FC**05				AMBIENT TEMPERATURE (F)											
				85			95			105			115		
				EAT (db)			EAT (db)			EAT (db)			EAT (db)		
				75	80	85	75	80	85	75	80	85	75	80	85
1200 Cfm	EAT (wb)	58	TC	40.5	40.5	44.8	37.5	37.5	43.0	34.5	34.5	39.6	30.9	30.9	35.7
			SHC	34.0	39.4	44.8	32.1	37.5	43.0	29.4	34.5	39.6	26.2	30.9	35.7
		62	TC	43.9	43.9	43.9	40.4	40.4	41.0	36.4	36.4	38.7	31.9	31.9	36.2
			SHC	31.1	37.1	43.1	29.0	35.0	41.0	26.7	32.7	38.7	24.2	30.2	36.2
		67	TC	49.3	49.3	49.3	46.1	46.1	46.1	42.3	42.3	42.3	37.8	37.8	37.8
			SHC	25.7	31.5	37.4	23.9	29.8	35.6	21.8	27.7	33.6	19.4	25.4	31.4
		72	TC	54.7	54.7	54.7	51.5	51.5	51.5	48.0	48.0	48.0	44.0	44.0	44.0
			SHC	20.3	25.8	31.2	18.5	24.1	29.7	16.6	22.2	27.9	14.5	20.2	25.9
		76	TC	—	58.5	58.5	—	55.7	55.7	—	52.3	52.3	—	48.4	48.4
			SHC	—	21.2	27.8	—	19.4	26.0	—	17.5	24.1	—	15.8	22.4
1400 Cfm	EAT (wb)	58	TC	43.0	43.0	49.0	40.1	40.1	45.9	37.0	37.0	42.4	33.3	33.3	38.4
			SHC	37.0	43.0	49.0	34.4	40.1	45.9	31.5	37.0	42.4	28.2	33.3	38.4
		62	TC	45.3	45.3	47.5	41.8	41.8	45.3	37.9	37.9	43.0	33.5	33.5	39.7
			SHC	33.6	40.6	47.5	31.5	38.4	45.3	29.2	36.1	43.0	26.4	33.0	39.7
		67	TC	50.9	50.9	50.9	47.5	47.5	47.5	43.7	43.7	43.7	39.2	39.2	39.2
			SHC	27.2	34.0	40.7	25.4	32.2	39.0	23.3	30.2	37.1	21.1	28.0	34.9
		72	TC	56.0	56.0	56.0	52.9	52.9	52.9	49.2	49.2	49.2	45.2	45.2	45.2
			SHC	20.8	27.1	33.5	19.0	25.5	32.1	17.1	23.7	30.3	15.0	21.7	28.4
		76	TC	—	59.8	59.8	—	56.8	56.8	—	53.3	53.3	—	49.3	49.3
			SHC	—	21.5	29.2	—	20.0	27.7	—	18.3	24.3	—	16.5	22.7
1600 Cfm	EAT (wb)	58	TC	45.2	45.2	51.5	42.2	42.2	48.3	39.0	39.0	44.7	35.2	35.2	40.6
			SHC	38.8	45.2	51.5	36.2	42.2	48.3	33.2	39.0	44.7	29.9	35.2	40.6
		62	TC	46.4	46.4	51.4	42.8	42.8	49.0	39.2	39.2	46.0	35.3	35.3	42.4
			SHC	35.8	43.6	51.4	33.6	41.3	49.0	31.0	38.5	46.0	28.1	35.3	42.4
		67	TC	51.9	51.9	51.9	48.4	48.4	48.4	44.6	44.6	44.6	40.0	40.0	40.0
			SHC	28.5	36.1	43.6	26.6	34.3	42.0	24.7	32.5	40.2	22.4	30.2	38.0
		72	TC	56.8	56.8	56.8	53.7	53.7	53.7	50.0	50.0	50.0	45.8	45.8	45.8
			SHC	21.0	28.2	35.3	19.3	26.7	34.0	17.4	24.9	32.4	15.4	22.9	30.5
		76	TC	—	60.4	60.4	—	57.4	57.4	—	53.9	53.9	—	—	—
			SHC	—	22.0	27.8	—	20.5	27.1	—	18.8	25.8	—	—	—
1800 Cfm	EAT (wb)	58	TC	46.8	46.8	53.4	43.9	43.9	50.2	40.5	40.5	46.5	36.8	36.8	42.4
			SHC	40.2	46.8	53.4	37.6	43.9	50.2	34.6	40.5	46.5	31.2	36.8	42.4
		62	TC	47.3	47.3	54.6	45.5	45.5	48.6	41.0	41.0	47.7	36.8	36.8	44.3
			SHC	37.6	46.1	54.6	33.9	41.3	48.6	32.2	39.9	47.7	29.3	36.8	44.3
		67	TC	52.5	52.5	52.5	49.0	49.0	49.0	45.1	45.1	45.1	40.5	40.5	40.9
			SHC	29.5	37.8	46.2	27.7	36.2	44.7	25.8	34.4	43.0	23.5	32.2	40.9
		72	TC	57.3	57.3	57.3	54.1	54.1	54.1	50.4	50.4	50.4	46.2	46.2	46.2
			SHC	21.2	29.0	36.9	19.5	27.6	35.7	17.6	25.8	34.1	15.5	23.9	32.3
		76	TC	—	60.7	60.7	—	57.8	57.8	—	54.2	54.2	—	—	—
			SHC	—	22.2	29.5	—	20.7	28.2	—	19.0	26.9	—	—	—
2000 Cfm	EAT (wb)	58	TC	48.0	48.0	54.8	45.1	45.1	51.6	41.8	41.8	47.9	38.0	38.0	43.7
			SHC	41.3	48.0	54.8	38.6	45.1	51.6	35.6	41.8	47.9	32.2	38.0	43.7
		62	TC	48.5	48.5	56.1	46.6	46.6	49.4	41.8	41.8	50.0	38.0	38.0	45.7
			SHC	38.6	47.3	56.1	34.5	42.0	49.4	33.5	41.8	50.0	30.2	38.0	45.7
		67	TC	52.7	52.7	52.7	49.2	49.2	49.2	45.3	45.3	45.6	40.7	40.7	43.7
			SHC	30.3	39.4	48.5	28.6	37.9	47.2	26.7	36.1	45.6	24.5	34.1	43.7
		72	TC	57.5	57.5	57.5	54.3	54.3	54.3	50.6	50.6	50.6	46.3	46.3	46.3
			SHC	21.1	29.6	38.2	19.4	28.3	37.1	17.6	26.6	35.6	15.6	24.8	33.9
		76	TC	—	60.7	60.7	—	57.8	57.8	—	—	—	—	—	—
			SHC	—	22.3	30.4	—	20.8	29.1	—	—	—	—	—	—

LEGEND

— — Do Not Operate
Cfm — Cubic Feet Per Minute (Supply Air)
EAT (db) — Entering Air Temperature (dry bulb)
EAT (wb) — Entering Air Temperature (wet bulb)
SHC — Sensible Heat Capacity (1000 Btuh) Gross
TC — Total Capacity (1000 Btuh) Gross

NOTE: See minimum-maximum airflow ratings on page 8.

48/50FC*B05 — UNIT WITH HUMIDI-MIZER® SYSTEM IN SUBCOOLING MODE — COOLING CAPACITIES

TEMP (F) AIR ENTERING CONDENSER (Edb)		AIR ENTERING EVAPORATOR — SCFM/BF								
		1200 / 0.04			1600 / 0.07			2000 / 0.10		
		Air Entering Evaporator — Ewb (F)								
		72	67	62	72	67	62	72	67	62
75	TC	49.7	44.9	40.6	52.9	47.8	43.5	54.8	49.8	0.0
	SHC	20.8	26.2	31.6	24.0	30.9	37.9	26.8	35.2	0.0
	kW	2.50	2.47	2.44	2.46	2.48	2.51	2.53	2.50	0.00
85	TC	46.5	42.0	37.9	49.1	44.7	40.6	51.2	46.5	42.6
	SHC	17.8	23.5	29.2	20.5	28.0	35.2	23.5	32.1	40.5
	kW	2.81	2.78	2.76	2.78	2.80	2.82	2.84	2.81	2.79
95	TC	43.1	38.9	35.1	45.8	41.5	37.6	47.5	43.1	39.4
	SHC	14.6	20.6	26.5	17.5	25.0	32.4	20.1	28.9	37.5
	kW	3.16	3.14	3.12	3.13	3.15	3.18	3.19	3.16	3.14
105	TC	39.3	35.3	32.0	41.8	37.7	34.2	43.4	39.1	35.9
	SHC	11.1	17.3	23.7	13.8	21.5	29.3	16.3	25.3	34.3
	kW	3.56	3.54	3.52	3.54	3.55	3.58	3.59	3.56	3.55
115	TC	35.3	31.8	28.6	37.4	33.7	30.5	39.1	35.3	32.2
	SHC	7.5	14.1	20.6	9.7	17.8	25.9	12.3	21.8	30.8
	kW	4.02	4.01	4.00	4.00	4.01	4.03	4.04	4.03	4.01
125	TC	31.2	27.9	24.9	33.2	29.8	26.8	34.5	31.0	28.3
	SHC	3.7	10.5	17.3	5.9	14.3	22.5	8.1	17.9	27.1
	kW	4.54	4.53	4.53	4.53	4.54	4.54	4.55	4.54	4.54

48/50FC*B05 — UNIT WITH HUMIDI-MIZER SYSTEM IN HOT GAS REHEAT MODE — COOLING CAPACITIES

TEMP (F) AIR ENTERING CONDENSER (Edb)		AIR ENTERING EVAPORATOR — Ewb (F)								
		75 Dry Bulb 62.5 Wet Bulb (50% Relative)			75 Dry Bulb 64 Wet Bulb (56% Relative)			75 Dry Bulb 65.3 Wet Bulb (60% Relative)		
		Air Entering Evaporator — Cfm								
		1200	1600	2000	1200	1600	2000	1200	1600	2000
80	TC	10.55	10.36	10.16	11.65	11.44	11.20	12.56	12.35	12.04
	SHC	-1.90	-1.24	-0.52	-3.80	-3.40	-2.95	-5.39	-5.19	-4.97
	kW	3.15	3.16	3.16	3.19	3.20	3.20	3.22	3.23	3.23
75	TC	12.91	12.76	12.57	13.89	13.76	13.47	14.64	14.56	14.25
	SHC	0.35	0.98	1.63	-1.54	-1.09	-0.76	-3.12	-2.80	-2.65
	kW	3.04	3.05	3.06	3.07	3.08	3.09	3.10	3.12	3.12
70	TC	15.12	14.94	14.82	15.98	15.88	15.60	16.69	16.50	16.13
	SHC	2.51	3.04	3.60	0.68	1.11	1.36	-0.78	-0.55	-0.50
	kW	2.92	2.93	2.95	2.96	2.97	2.98	2.98	2.99	3.00
60	TC	18.97	18.79	18.53	19.24	19.18	18.82	19.83	19.58	21.59
	SHC	6.49	6.91	7.10	4.77	5.17	5.26	3.72	3.89	4.75
	kW	3.17	3.23	3.15	3.21	3.26	3.18	3.23	3.12	3.10
50	TC	17.53	13.35	13.30	13.45	13.58	13.53	13.67	13.79	13.74
	SHC	9.21	8.03	7.71	7.82	7.54	7.16	7.44	7.10	6.68
	kW	3.01	3.07	3.11	3.04	3.10	3.15	3.07	3.14	3.18
40	TC	17.53	13.35	13.30	13.45	13.58	13.53	13.67	13.79	13.74
	SHC	9.21	8.03	7.71	7.82	7.54	7.16	7.44	7.10	6.68
	kW	3.39	3.32	3.24	3.14	3.23	3.15	3.18	3.27	3.08

LEGEND

Edb — Entering Dry Bulb
Ewb — Entering Wet Bulb
kW — Compressor Power Input
SCFM/BF — Standard Cubic Feet per Minute/Bypass Factor
SHC — Sensible Heat Capacity (1000 Btuh) Gross
TC — Total Capacity (1000 Btuh) Gross

48/50FC**06 SINGLE STAGE COOLING CAPACITIES

48/50FC**06				AMBIENT TEMPERATURE (F)											
				85			95			105			115		
				EAT (db)			EAT (db)			EAT (db)			EAT (db)		
				75	80	85	75	80	85	75	80	85	75	80	85
1500 Cfm	EAT (wb)	58	TC	52.2	52.2	58.7	49.3	49.3	55.4	46.0	46.0	51.7	42.5	42.5	47.7
			SHC	45.7	52.2	58.7	43.2	49.3	55.4	40.3	46.0	51.7	37.2	42.5	47.7
		62	TC	55.2	55.2	56.6	51.3	51.3	54.6	47.1	47.1	52.4	42.6	42.6	49.7
			SHC	41.9	49.2	56.6	40.0	47.3	54.6	37.9	45.2	52.4	35.5	42.6	49.7
		67	TC	61.0	61.0	61.0	57.5	57.5	57.5	53.2	53.2	53.2	48.4	48.4	48.4
			SHC	34.7	41.9	49.1	33.3	40.6	48.0	31.5	38.9	46.2	29.5	36.8	44.2
		72	TC	64.4	64.4	64.4	62.9	62.9	62.9	59.4	59.4	59.4	55.1	55.1	55.1
			SHC	26.4	33.4	40.5	25.8	33.1	40.3	24.5	31.8	39.1	22.8	30.2	37.6
		76	TC	—	66.0	66.0	—	65.1	65.1	—	63.0	63.0	—	59.5	59.5
			SHC	—	26.9	35.1	—	26.5	34.8	—	25.8	34.0	—	24.4	32.4
1750 Cfm	EAT (wb)	58	TC	54.8	54.8	61.7	51.6	51.6	58.1	48.2	48.2	54.3	44.5	44.5	50.1
			SHC	47.9	54.8	61.7	45.1	51.6	58.1	42.1	48.2	54.3	38.9	44.5	50.1
		62	TC	56.5	56.5	60.9	52.7	52.7	59.0	48.4	48.4	56.5	44.6	44.6	52.1
			SHC	44.3	52.6	60.9	42.4	50.7	59.0	40.2	48.4	56.5	37.0	44.6	52.1
		67	TC	62.0	62.0	62.0	58.7	58.7	58.7	54.4	54.4	54.4	49.4	49.4	49.4
			SHC	35.7	43.7	51.7	34.6	42.9	51.2	32.9	41.3	49.7	30.9	39.3	47.8
		72	TC	64.6	64.6	64.6	63.4	63.4	63.4	60.3	60.3	60.3	56.1	56.1	56.1
			SHC	26.2	33.8	41.5	25.8	33.8	41.8	24.6	32.9	41.1	23.1	31.4	39.8
		76	TC	—	65.9	65.9	—	64.8	64.8	—	63.3	63.3	—	59.9	59.9
			SHC	—	27.2	36.8	—	26.7	36.3	—	26.0	35.1	—	24.7	33.5
2000 Cfm	EAT (wb)	58	TC	56.6	56.6	63.8	53.5	53.5	60.3	49.9	49.9	56.3	46.1	46.1	52.0
			SHC	49.4	56.6	63.8	46.7	53.5	60.3	43.6	49.9	56.3	40.2	46.1	52.0
		62	TC	57.5	57.5	64.5	53.7	53.7	62.9	50.0	50.0	58.5	46.1	46.1	54.0
			SHC	46.2	55.3	64.5	44.5	53.7	62.9	41.4	50.0	58.5	38.2	46.1	54.0
		67	TC	62.1	62.1	62.1	59.3	59.3	59.3	55.0	55.0	55.0	50.0	50.0	51.0
			SHC	36.0	44.6	53.3	35.5	44.7	53.9	34.0	43.4	52.8	32.1	41.6	51.0
		72	TC	64.3	64.3	64.3	63.4	63.4	63.4	60.6	60.6	60.6	56.5	56.5	56.5
			SHC	25.7	34.0	42.2	25.4	34.1	42.7	24.5	33.6	42.6	23.1	32.3	41.6
		76	TC	—	65.6	65.6	—	64.1	64.1	—	63.1	63.1	—	59.9	59.9
			SHC	—	27.0	37.5	—	26.4	36.5	—	25.8	35.6	—	24.6	34.3
2250 Cfm	EAT (wb)	58	TC	57.7	57.7	65.2	54.7	54.7	61.8	51.2	51.2	57.8	47.2	47.2	53.3
			SHC	50.2	57.7	65.2	47.6	54.7	61.8	44.5	51.2	57.8	41.0	47.2	53.3
		62	TC	57.9	57.9	67.9	54.8	54.8	64.3	51.2	51.2	60.1	47.2	47.2	55.4
			SHC	47.9	57.9	67.9	45.3	54.8	64.3	42.3	51.2	60.1	39.0	47.2	55.4
		67	TC	61.7	61.7	61.7	59.5	59.5	59.5	55.2	55.2	55.5	50.2	50.2	53.9
			SHC	36.0	45.1	54.3	36.1	46.2	56.2	34.8	45.1	55.5	33.0	43.5	53.9
		72	TC	63.9	63.9	63.9	62.9	62.9	62.9	60.5	60.5	60.5	56.5	56.5	56.5
			SHC	25.1	33.8	42.5	24.9	34.0	43.2	24.2	33.9	43.6	22.8	32.9	43.0
		76	TC	—	65.0	65.0	—	63.5	63.5	—	62.6	62.6	—	59.5	59.5
			SHC	—	26.5	37.3	—	25.9	36.4	—	25.4	35.8	—	24.4	34.6
2500 Cfm	EAT (wb)	58	TC	58.2	58.2	65.9	55.4	55.4	62.7	51.9	51.9	58.8	47.9	47.9	54.3
			SHC	50.6	58.2	65.9	48.1	55.4	62.7	45.1	51.9	58.8	41.6	47.9	54.3
		62	TC	58.2	58.2	68.5	56.4	56.4	59.5	51.9	51.9	61.1	47.9	47.9	56.4
			SHC	48.0	58.2	68.5	42.8	51.1	59.5	42.8	51.9	61.1	39.4	47.9	56.4
		67	TC	61.1	61.1	61.1	59.2	59.2	59.2	55.1	55.1	57.7	50.1	50.1	56.3
			SHC	35.8	45.5	55.2	36.4	47.2	57.9	35.3	46.5	57.7	33.6	44.9	56.3
		72	TC	63.1	63.1	63.1	62.0	62.0	62.0	60.0	60.0	60.0	56.1	56.1	56.1
			SHC	24.3	33.4	42.5	24.0	33.6	43.2	23.5	33.9	44.3	22.3	33.1	43.9
		76	TC	—	64.1	64.1	—	62.7	62.7	—	61.8	61.8	—	58.8	58.8
			SHC	—	25.8	36.9	—	25.2	36.1	—	24.8	35.7	—	23.8	34.7

LEGEND

— — Do Not Operate
Cfm — Cubic Feet Per Minute (Supply Air)
EAT (db) — Entering Air Temperature (dry bulb)
EAT (wb) — Entering Air Temperature (wet bulb)
SHC — Sensible Heat Capacity (1000 Btuh) Gross
TC — Total Capacity (1000 Btuh) Gross

NOTE: See minimum-maximum airflow ratings on page 8.

48/50FC*B06 — UNIT WITH HUMIDI-MIZER® SYSTEM IN SUBCOOLING MODE — COOLING CAPACITIES

TEMP (F) AIR ENTERING CONDENSER (Edb)		AIR ENTERING EVAPORATOR — SCFM/BF								
		1500 / 0.01			2000 / 0.02			2500 / 0.03		
		Air Entering Evaporator — Ewb (F)								
		72	67	62	72	67	62	72	67	62
75	TC	65.6	59.0	53.7	69.6	63.1	57.4	72.0	65.6	60.4
	SHC	25.3	33.5	42.2	29.9	40.9	51.6	34.3	47.6	60.0
	kW	3.11	3.06	3.03	3.05	3.09	3.16	3.16	3.11	3.07
85	TC	61.1	55.4	50.2	65.0	58.9	53.7	66.8	61.0	56.4
	SHC	21.1	30.0	38.8	25.6	36.9	48.0	29.3	43.3	56.0
	kW	3.47	3.43	3.39	3.42	3.46	3.51	3.52	3.48	3.44
95	TC	56.7	51.2	46.4	60.1	54.5	49.6	62.2	56.5	52.1
	SHC	16.9	26.1	35.2	21.0	32.7	44.2	25.0	39.1	52.1
	kW	3.89	3.85	3.80	3.83	3.88	3.93	3.95	3.90	3.86
105	TC	51.8	46.6	42.0	54.3	49.0	44.4	56.9	51.1	46.9
	SHC	12.3	21.7	31.1	15.5	27.5	39.3	20.0	34.0	46.9
	kW	4.36	4.31	4.26	4.29	4.33	4.38	4.42	4.36	4.32
115	TC	46.5	41.9	37.8	49.1	44.3	40.2	50.8	46.2	42.5
	SHC	7.3	17.3	27.2	10.7	23.2	35.4	14.4	29.4	42.5
	kW	4.88	4.83	4.78	4.81	4.86	4.91	4.93	4.88	4.84
125	TC	40.8	36.7	33.1	43.1	38.9	35.1	44.9	40.5	37.3
	SHC	2.0	12.5	22.8	5.2	18.2	30.5	8.9	24.2	37.3
	kW	5.44	5.39	5.35	5.37	5.42	5.47	5.49	5.44	5.40

48/50FC*B06 — UNIT WITH HUMIDI-MIZER SYSTEM IN HOT GAS REHEAT MODE — COOLING CAPACITIES

TEMP (F) AIR ENTERING CONDENSER (Edb)		AIR ENTERING EVAPORATOR — Ewb (F)								
		75 Dry Bulb 62.5 Wet Bulb (50% Relative)			75 Dry Bulb 64 Wet Bulb (56% Relative)			75 Dry Bulb 65.3 Wet Bulb (60% Relative)		
		Air Entering Evaporator — Cfm								
		1500	2000	2500	1500	2000	2500	1500	2000	2500
80	TC	13.19	12.95	12.70	14.56	14.30	14.00	15.70	15.44	15.05
	SHC	-2.38	-1.55	-0.65	-4.75	-4.25	-3.69	-6.74	-6.49	-6.21
	kW	3.15	3.16	3.16	3.19	3.20	3.20	3.22	3.23	3.23
75	TC	16.14	15.95	15.71	17.36	17.20	16.84	18.30	18.20	17.81
	SHC	0.44	1.23	2.03	-1.92	-1.36	-0.96	-3.90	-3.50	-3.31
	kW	3.04	3.05	3.06	3.07	3.08	3.09	3.10	3.12	3.12
70	TC	18.90	18.68	18.52	19.97	19.85	19.50	20.86	20.62	20.17
	SHC	3.13	3.80	4.51	0.85	1.39	1.70	-0.97	-0.69	-0.63
	kW	2.92	2.93	2.95	2.96	2.97	2.98	2.98	2.99	3.00
60	TC	23.71	23.48	23.16	24.05	23.98	23.52	24.79	24.47	26.99
	SHC	8.11	8.63	8.88	5.97	6.46	6.58	4.65	4.87	5.94
	kW	3.17	3.23	3.15	3.21	3.26	3.18	3.23	3.12	3.10
50	TC	21.91	16.69	16.62	16.81	16.98	16.92	17.08	17.24	17.17
	SHC	11.51	10.04	9.64	9.77	9.43	8.95	9.30	8.88	8.35
	kW	3.01	3.07	3.11	3.04	3.10	3.15	3.07	3.14	3.18
40	TC	21.91	16.69	16.62	16.81	16.98	16.92	17.08	17.24	17.17
	SHC	11.51	10.04	9.64	9.77	9.43	8.95	9.30	8.88	8.35
	kW	3.39	3.32	3.24	3.14	3.23	3.15	3.18	3.27	3.08

LEGEND

Edb — Entering Dry Bulb
Ewb — Entering Wet Bulb
kW — Compressor Power Input
SCFM/BF — Standard Cubic Feet per Minute/Bypass Factor
SHC — Sensible Heat Capacity (1000 Btuh) Gross
TC — Total Capacity (1000 Btuh) Gross

48/50FC**07 HIGH STAGE COOLING CAPACITIES

48/50FC**07				AMBIENT TEMPERATURE (F)											
				85			95			105			115		
				EAT (db)			EAT (db)			EAT (db)			EAT (db)		
				75	80	85	75	80	85	75	80	85	75	80	85
1800 Cfm	EAT (wb)	58	TC	63.8	63.8	72.2	61.1	61.1	69.1	58.1	58.1	65.8	54.9	54.9	62.3
			SHC	55.5	63.8	72.2	53.0	61.1	69.1	50.4	58.1	65.8	47.6	54.9	62.3
		62	TC	67.2	67.2	68.3	63.7	63.7	66.4	60.0	60.0	64.4	56.2	56.2	62.3
			SHC	49.9	59.1	68.3	48.1	57.3	66.4	46.1	55.3	64.4	44.1	53.2	62.3
		67	TC	73.2	73.2	73.2	69.5	69.5	69.5	65.5	65.5	65.5	61.4	61.4	61.4
			SHC	40.8	50.0	59.2	39.0	48.2	57.4	37.1	46.3	55.6	35.2	44.4	53.6
		72	TC	79.7	79.7	79.7	75.7	75.7	75.7	71.5	71.5	71.5	67.1	67.1	67.1
			SHC	31.4	40.7	50.0	29.7	39.0	48.3	27.9	37.2	46.4	26.1	35.3	44.5
		76	TC	—	85.3	85.3	—	81.0	81.0	—	76.6	76.6	—	72.0	72.0
			SHC	—	33.3	43.1	—	31.6	41.3	—	29.8	39.5	—	28	37.6
2100 Cfm	EAT (wb)	58	TC	67.1	67.1	75.9	64.1	64.1	72.5	60.9	60.9	69.0	57.6	57.6	65.2
			SHC	58.3	67.1	75.9	55.7	64.1	72.5	52.8	60.9	69.0	49.9	57.6	65.2
		62	TC	69.0	69.0	74.7	65.4	65.4	72.6	61.6	61.6	70.4	57.7	57.7	68.0
			SHC	53.6	64.1	74.7	51.7	62.2	72.6	49.6	60.0	70.4	47.4	57.7	68.0
		67	TC	75.0	75.0	75.0	71.2	71.2	71.2	67.0	67.0	67.0	62.7	62.7	62.7
			SHC	43.2	53.8	64.4	41.4	52.0	62.6	39.5	50.1	60.7	37.6	48.2	58.7
		72	TC	81.6	81.6	81.6	77.5	77.5	77.5	73.1	73.1	73.1	68.5	68.5	68.5
			SHC	32.5	43.2	53.8	30.7	41.4	52.0	28.9	39.5	50.1	27.1	37.6	48.2
		76	TC	—	87.2	87.2	—	82.8	82.8	—	78.2	78.2	—	73.5	73.5
			SHC	—	34.6	45.7	—	32.9	43.9	—	31.1	42.0	—	29.2	40.1
2400 Cfm	EAT (wb)	58	TC	69.7	69.7	78.8	66.6	66.6	75.3	63.2	63.2	71.6	59.7	59.7	67.6
			SHC	60.6	69.7	78.8	57.8	66.6	75.3	54.9	63.2	71.6	51.7	59.7	67.6
		62	TC	70.5	70.5	80.4	66.9	66.9	78.0	63.3	63.3	74.4	59.7	59.7	70.3
			SHC	57.0	68.7	80.4	54.9	66.5	78.0	52.1	63.3	74.4	49.1	59.7	70.3
		67	TC	76.4	76.4	76.4	72.4	72.4	72.4	68.2	68.2	68.2	63.8	63.8	63.8
			SHC	45.5	57.5	69.4	43.7	55.6	67.5	41.8	53.7	65.6	39.8	51.7	63.6
		72	TC	83.1	83.1	83.1	78.8	78.8	78.8	74.2	74.2	74.2	69.6	69.6	69.6
			SHC	33.5	45.5	57.4	31.7	43.6	55.6	29.8	41.8	53.7	28.0	39.9	51.7
		76	TC	—	88.8	88.8	—	84.2	84.2	—	79.5	79.5	—	74.6	74.6
			SHC	—	35.9	48.2	—	34.1	46.4	—	32.3	44.5	—	30.4	42.5
2700 Cfm	EAT (wb)	58	TC	71.9	71.9	81.3	68.7	68.7	77.7	65.1	65.1	73.7	61.5	61.5	69.7
			SHC	62.5	71.9	81.3	59.6	68.7	77.7	56.5	65.1	73.7	53.3	61.5	69.7
		62	TC	72.0	72.0	84.5	68.7	68.7	80.7	65.2	65.2	76.6	61.5	61.5	72.4
			SHC	59.5	72.0	84.5	56.7	68.7	80.7	53.7	65.2	76.6	50.6	61.5	72.4
		67	TC	77.5	77.5	77.5	73.4	73.4	73.4	69.0	69.0	70.3	64.5	64.5	68.3
			SHC	47.7	61.0	74.2	45.9	59.1	72.3	43.9	57.1	70.3	41.9	55.1	68.3
		72	TC	84.2	84.2	84.2	79.8	79.8	79.8	75.2	75.2	75.2	70.4	70.4	70.4
			SHC	34.4	47.6	60.9	32.6	45.8	59.0	30.7	43.9	57.1	28.8	42.0	55.1
		76	TC	—	90.0	90.0	—	85.3	85.3	—	80.5	80.5	—	75.5	75.5
			SHC	—	37.0	50.6	—	35.2	48.7	—	33.4	46.8	—	31.5	44.8
3000 Cfm	EAT (wb)	58	TC	73.8	73.8	83.4	70.4	70.4	79.6	66.8	66.8	75.6	63.0	63.0	71.3
			SHC	64.2	73.8	83.4	61.2	70.4	79.6	58.0	66.8	75.6	54.6	63.0	71.3
		62	TC	73.8	73.8	86.6	70.4	70.4	82.7	66.8	66.8	78.5	63.0	63.0	74.1
			SHC	61.0	73.8	86.6	58.2	70.4	82.7	55.1	66.8	78.5	51.9	63.0	74.1
		67	TC	78.4	78.4	78.9	74.2	74.2	76.9	69.7	69.7	74.8	65.2	65.2	72.6
			SHC	49.8	64.3	78.9	47.9	62.4	76.9	46.0	60.4	74.8	43.9	58.3	72.6
		72	TC	85.1	85.1	85.1	80.6	80.6	80.6	75.9	75.9	75.9	71.1	71.1	71.1
			SHC	35.2	49.7	64.3	33.4	47.9	62.4	31.5	46.0	60.4	29.7	44.0	58.4
		76	TC	—	91.0	91.0	—	86.2	86.2	—	81.3	81.3	—	76.3	76.3
			SHC	—	38.1	52.9	—	36.3	51.0	—	34.5	49.0	—	32.5	47.0

LEGEND

— — Do Not Operate
Cfm — Cubic Feet Per Minute (Supply Air)
EAT (db) — Entering Air Temperature (dry bulb)
EAT (wb) — Entering Air Temperature (wet bulb)
SHC — Sensible Heat Capacity (1000 Btuh) Gross
TC — Total Capacity (1000 Btuh) Gross

NOTE: See minimum-maximum airflow ratings on page 8.

48/50FC**07 LOW STAGE COOLING CAPACITIES

48/50FC**07				AMBIENT TEMPERATURE (F)											
				85			95			105			115		
				EAT (db)			EAT (db)			EAT (db)			EAT (db)		
				75	80	85	75	80	85	75	80	85	75	80	85
1200 Cfm	EAT (wb)	58	TC	44.2	44.2	50.4	41.6	41.6	47.5	38.8	38.8	44.4	35.7	35.7	41.0
			SHC	38.0	44.2	50.4	35.7	41.6	47.5	33.1	38.8	44.4	30.3	35.7	41.0
		62	TC	47.6	47.6	47.6	44.3	44.3	45.1	40.8	40.8	43.0	37.0	37.0	40.7
			SHC	34.0	40.5	47.0	32.0	38.5	45.1	29.9	36.5	43.0	27.7	34.2	40.7
		67	TC	53.1	53.1	53.1	49.7	49.7	49.7	45.9	45.9	45.9	41.9	41.9	41.9
			SHC	28.1	34.7	41.2	26.2	32.7	39.2	24.1	30.6	37.2	21.9	28.5	35.0
		72	TC	59.0	59.0	59.0	55.4	55.4	55.4	51.5	51.5	51.5	47.2	47.2	47.2
			SHC	22.1	28.6	35.2	20.2	26.7	33.3	18.1	24.7	31.2	16.0	22.6	29.1
		76	TC	—	64.2	64.2	—	60.4	60.4	—	56.3	56.3	—	51.8	51.8
			SHC	—	23.7	30.3	—	21.8	28.4	—	19.8	26.4	—	17.8	24.4
1400 Cfm	EAT (wb)	58	TC	47.4	47.4	53.9	44.6	44.6	50.9	41.6	41.6	47.6	38.3	38.3	43.9
			SHC	40.8	47.4	53.9	38.3	44.6	50.9	35.6	41.6	47.6	32.6	38.3	43.9
		62	TC	49.5	49.5	52.3	46.1	46.1	50.3	42.4	42.4	48.1	38.5	38.5	45.7
			SHC	37.2	44.8	52.3	35.2	42.7	50.3	33.0	40.6	48.1	30.7	38.2	45.7
		67	TC	55.0	55.0	55.0	51.5	51.5	51.5	47.5	47.5	47.5	43.3	43.3	43.3
			SHC	30.2	37.8	45.4	28.3	35.8	43.4	26.1	33.7	41.3	23.9	31.5	39.1
		72	TC	61.1	61.1	61.1	57.3	57.3	57.3	53.1	53.1	53.1	48.7	48.7	48.7
			SHC	23.1	30.8	38.4	21.2	28.8	36.4	19.1	26.7	34.3	16.9	24.6	32.2
		76	TC	—	66.4	66.4	—	62.4	62.4	—	58.1	58.1	—	53.4	53.4
			SHC	—	25.0	32.7	—	23.1	30.8	—	21.1	28.8	—	18.9	26.6
1600 Cfm	EAT (wb)	58	TC	50.0	50.0	56.8	47.1	47.1	53.6	43.9	43.9	50.1	40.4	40.4	46.3
			SHC	43.1	50.0	56.8	40.5	47.1	53.6	37.6	43.9	50.1	34.5	40.4	46.3
		62	TC	51.0	51.0	57.3	47.5	47.5	55.2	43.9	43.9	52.3	40.5	40.5	48.4
			SHC	40.2	48.8	57.3	38.1	46.6	55.2	35.6	43.9	52.3	32.6	40.5	48.4
		67	TC	56.5	56.5	56.5	52.8	52.8	52.8	48.7	48.7	48.7	44.3	44.3	44.3
			SHC	32.2	40.9	49.5	30.2	38.8	47.5	28.1	36.7	45.3	25.8	34.5	43.1
		72	TC	62.6	62.6	62.6	58.7	58.7	58.7	54.4	54.4	54.4	49.8	49.8	49.8
			SHC	24.1	32.7	41.4	22.1	30.7	39.4	20.0	28.6	37.3	17.8	26.5	35.1
		76	TC	—	68.0	68.0	—	63.9	63.9	—	59.5	59.5	—	54.7	54.7
			SHC	—	26.2	35.0	—	24.2	33.0	—	22.2	30.9	—	20.0	28.8
1800 Cfm	EAT (wb)	58	TC	52.2	52.2	59.3	49.2	49.2	56.0	45.8	45.8	52.3	42.2	42.2	48.4
			SHC	45.1	52.2	59.3	42.4	49.2	56.0	39.3	45.8	52.3	36.1	42.2	48.4
		62	TC	52.3	52.3	61.8	49.2	49.2	58.3	45.9	45.9	54.5	42.3	42.3	50.4
			SHC	42.8	52.3	61.8	40.2	49.2	58.3	37.2	45.9	54.5	34.1	42.3	50.4
		67	TC	57.6	57.6	57.6	53.8	53.8	53.8	49.6	49.6	49.6	45.2	45.2	47.0
			SHC	34.1	43.8	53.5	32.1	41.8	51.4	29.9	39.6	49.3	27.6	37.3	47.0
		72	TC	63.8	63.8	63.8	59.8	59.8	59.8	55.4	55.4	55.4	50.7	50.7	50.7
			SHC	24.9	34.6	44.4	22.9	32.6	42.3	20.8	30.5	40.2	18.6	28.3	38.0
		76	TC	—	69.4	69.4	—	65.2	65.2	—	60.6	60.6	—	—	—
			SHC	—	27.3	37.1	—	25.3	35.1	—	23.2	33.0	—	—	—
2000 Cfm	EAT (wb)	58	TC	54.1	54.1	61.5	51.0	51.0	58.0	47.5	47.5	54.2	43.8	43.8	50.1
			SHC	46.8	54.1	61.5	43.9	51.0	58.0	40.8	47.5	54.2	37.4	43.8	50.1
		62	TC	54.2	54.2	64.0	51.0	51.0	60.4	47.6	47.6	56.5	43.8	43.8	52.2
			SHC	44.4	54.2	64.0	41.7	51.0	60.4	38.6	47.6	56.5	35.4	43.8	52.2
		67	TC	58.6	58.6	58.6	54.7	54.7	55.3	50.4	50.4	53.0	45.9	45.9	50.7
			SHC	35.9	46.6	57.3	33.8	44.6	55.3	31.7	42.3	53.0	29.4	40.0	50.7
		72	TC	64.8	64.8	64.8	60.7	60.7	60.7	56.1	56.1	56.1	51.4	51.4	51.4
			SHC	25.7	36.5	47.2	23.7	34.4	45.2	21.5	32.3	43.0	19.3	30.0	40.8
		76	TC	—	70.5	70.5	—	66.2	66.2	—	—	—	—	—	—
			SHC	—	28.3	39.2	—	26.3	37.1	—	—	—	—	—	—

LEGEND

— — Do Not Operate
Cfm — Cubic Feet Per Minute (Supply Air)
EAT (db) — Entering Air Temperature (dry bulb)
EAT (wb) — Entering Air Temperature (wet bulb)
SHC — Sensible Heat Capacity (1000 Btuh) Gross
TC — Total Capacity (1000 Btuh) Gross

NOTE: See minimum-maximum airflow ratings on page 8.

48/50FC*N07 — UNIT WITH HUMIDI-MIZER® SYSTEM IN SUBCOOLING MODE — COOLING CAPACITIES

TEMP (F) AIR ENTERING CONDENSER (Edb)		AIR ENTERING EVAPORATOR — SCFM/BF								
		1800 / 0.06			2400 / 0.08			3000 / 0.10		
		Air Entering Evaporator — Ewb (F)								
		72	67	62	72	67	62	72	67	62
75	TC	73.7	66.6	60.2	78.4	71.0	64.4	81.3	73.7	67.4
	SHC	32.8	40.5	48.3	37.8	47.8	57.7	42.1	54.3	65.7
	kW	4.05	4.01	3.97	4.00	4.04	4.08	4.09	4.05	4.02
85	TC	69.5	62.8	56.8	73.8	67.0	60.7	76.8	69.6	63.6
	SHC	28.8	36.9	45.0	33.4	43.9	54.2	37.7	50.4	62.0
	kW	4.46	4.43	4.39	4.42	4.45	4.48	4.51	4.47	4.43
95	TC	65.1	58.8	53.0	69.3	62.7	56.8	71.9	65.1	59.5
	SHC	24.7	33.1	41.5	29.1	39.9	50.5	33.2	46.1	58.1
	kW	4.92	4.89	4.86	4.88	4.91	4.95	4.96	4.92	4.90
105	TC	60.4	54.4	49.0	64.2	58.0	52.5	66.7	60.3	55.0
	SHC	20.3	29.1	37.9	24.4	35.6	46.6	28.3	41.8	53.9
	kW	5.43	5.40	5.37	5.39	5.42	5.45	5.47	5.43	5.41
115	TC	55.3	49.7	44.7	58.8	53.1	47.9	61.0	55.1	50.1
	SHC	15.7	24.9	34.0	19.5	31.2	42.5	23.2	37.1	50.0
	kW	5.99	5.96	5.93	5.95	5.98	6.01	6.02	5.99	5.97
125	TC	49.8	44.7	40.1	53.0	47.6	43.0	55.0	49.5	45.0
	SHC	10.7	20.5	30.0	14.3	26.4	38.1	17.8	32.1	45.0
	kW	6.59	6.57	6.55	6.56	6.59	6.61	6.62	6.60	6.58

48/50FC*N07 — UNIT WITH HUMIDI-MIZER SYSTEM IN HOT GAS REHEAT MODE — COOLING CAPACITIES

TEMP (F) AIR ENTERING CONDENSER (Edb)		AIR ENTERING EVAPORATOR — Ewb (F)								
		75 Dry Bulb 62.5 Wet Bulb (50% Relative)			75 Dry Bulb 64 Wet Bulb (56% Relative)			75 Dry Bulb 65.3 Wet Bulb (60% Relative)		
		Air Entering Evaporator — Cfm								
		1800	2400	3000	1800	2400	3000	1800	2400	3000
80	TC	14.02	15.01	15.61	14.70	15.71	16.33	15.30	16.34	16.97
	SHC	-0.84	1.73	4.56	-2.95	-0.90	1.45	-4.78	-3.17	-1.24
	kW	4.15	4.16	4.17	4.17	4.18	4.18	4.18	4.19	4.20
75	TC	15.10	16.17	16.79	15.82	16.89	17.52	16.45	17.54	18.19
	SHC	0.25	2.88	5.72	-1.81	0.29	2.64	-3.59	-1.95	-0.02
	kW	3.96	3.97	3.98	3.98	3.99	4.00	4.00	4.01	4.01
70	TC	15.37	16.68	17.44	16.19	17.39	18.18	17.08	18.37	19.28
	SHC	0.50	3.39	6.36	-1.44	0.78	3.30	-2.94	-1.07	1.12
	kW	3.97	3.93	3.91	3.96	3.95	3.93	3.92	3.89	3.87
60	TC	16.00	16.95	17.50	16.64	17.59	18.16	18.27	18.17	19.09
	SHC	1.11	3.63	6.39	-1.04	0.94	3.23	-1.92	-1.39	0.84
	kW	3.95	3.99	4.01	3.99	4.02	4.04	4.09	4.05	4.01
50	TC	16.10	16.93	17.42	16.68	17.50	18.57	17.19	18.60	19.12
	SHC	1.18	3.58	6.29	-1.05	0.83	3.63	-2.98	-0.98	0.84
	kW	4.03	4.08	4.11	4.07	4.12	4.05	4.12	4.06	4.09
40	TC	16.83	17.62	18.25	17.38	18.17	18.61	17.86	19.42	19.92
	SHC	1.89	4.25	5.84	-0.36	1.47	3.65	-2.32	-0.17	1.62
	kW	3.96	4.02	4.08	4.01	4.08	4.11	4.06	4.00	4.03

LEGEND

Ewb — Entering wet bulb
kW — compressor Power Input
SCFM/BF — Standard Cubic Feet per Minute/Bypass Factor
SHC — Sensible Heat Capacity (1000 Btuh) Gross
TC — Total Capacity (1000 Btuh) Gross

PRESSURE DROPS FOR ELECTRIC AND GAS HEATING UNITS

PRESSURE DROP FOR ELECTRIC HEAT 3 TO 5 TON UNITS - 1 STAGE HEAT

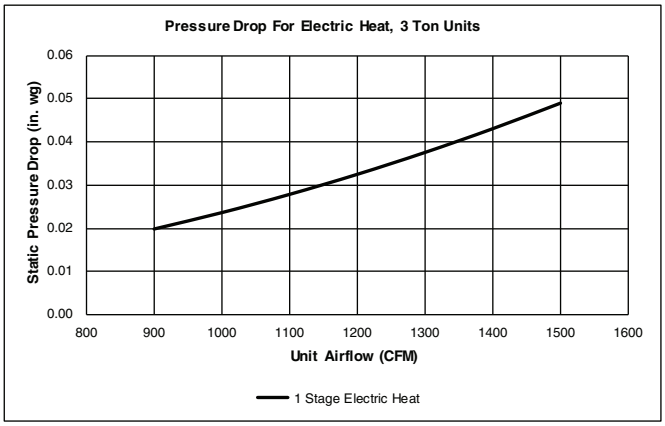

PRESSURE DROP FOR ELECTRIC HEAT 4 TO 6 TON UNITS - 1 AND 2 STAGE HEAT

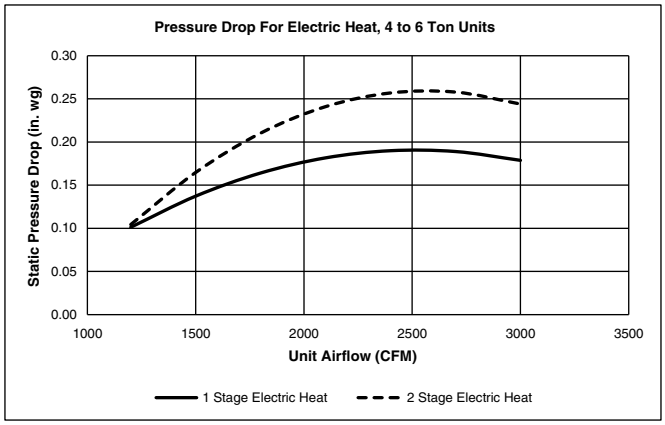

SINGLE PHASE GAS HEAT STAGES

UNIT SIZE	HEAT SIZE		
1 Phase	Low	Med	High
04	1	1	—
05	1	1	1
06	1	1	1

THREE PHASE GAS HEAT STAGES

UNIT SIZE	HEAT SIZE		
3 Phase	Low	Med	High
04	1	2	—
05	1	1	2
06	1	1	2
07	1	1	2

GAS HEAT STATIC PRESSURE DEDUCTIONS – 3 TON UNITS

CFM	900	1000	1100	1200	1300	1400	1500
Low Gas Heat Deduction	0.01	0.01	0.02	0.03	0.03	0.04	0.04

GAS HEAT STATIC PRESSURE DEDUCTIONS – 4 TO 6 TON UNITS

CFM	1200	1500	1800	2100	2400	2700	3000
Medium Gas Heat Deduction	0.01	0.05	0.08	0.12	0.15	0.18	0.20
Low Gas Heat Deduction	0.03	0.10	0.17	0.23	0.29	0.36	0.42

FIELD-INSTALLED ACCESSORY ELECTRIC HEATER DATA

50FC UNIT SIZE	VOLTAGE	HEATER MODEL NUMBER*	NUMBER OF STAGES
04	208/230	CRHEATER323A00	1
		CRHEATER324A00	1
		CRHEATER325A00	1
		CRHEATER326A00	1
		CRHEATER327A00	2
		CRHEATER328A00	1
	460	CRHEATER333A00	1
		CRHEATER334A00	1
		CRHEATER335A00	1
		CRHEATER336A00	1
	575	CRHEATER339A00	1
		CRHEATER340A00	1
05	208/230	CRHEATER323A00	1
		CRHEATER324A00	1
		CRHEATER325A00	1
		CRHEATER326A00	1
		CRHEATER327A00	2
		CRHEATER328A00	1
		CRHEATER329A00	2
		CRHEATER330A00†	2
		CRHEATER331A00**	2
	460	CRHEATER333A00	1
		CRHEATER335A00	1
		CRHEATER336A00	1
		CRHEATER337A00	2
	575	CRHEATER339A00	1
		CRHEATER340A00	1
06, 07	208/230	CRHEATER324A00	1
		CRHEATER325A00	1
		CRHEATER326A00	1
		CRHEATER327A00	2
		CRHEATER328A00	1
		CRHEATER329A00	2
		CRHEATER331A00	2
		CRHEATER332A00	2
	460	CRHEATER333A00	1
		CRHEATER335A00	1
		CRHEATER336A00	1
		CRHEATER337A00	2
		CRHEATER338A00	2
	575	CRHEATER340A00	1
		CRHEATER341A00	2

*Check heater nameplate for model number.
†Do not use with size 05 horizontal supply duct configuration units.
**Do not use with size 05 vertical supply duct configuration units.

USE OF CRHEATER330A00 FOR 50FC UNITS (WITH OR WITHOUT NON-FUSED DISCONNECT)

DUCT CONFIGURATION	50FC UNIT SIZE			
	04	05	06	07
Vertical Supply	Not available	Available	Not available	Not available
Horizontal Supply	Not available	Not available	Not available	Not available

USE OF CRHEATER331A00 FOR 50FC UNITS (WITH OR WITHOUT NON-FUSED DISCONNECT)

DUCT CONFIGURATION	50FC UNIT SIZE			
	04	05	06	07
Vertical Supply	Not available	Not available	Available	Available
Horizontal Supply	Not available	Available	Available	Available

ECONOMIZER BAROMETRIC RELIEF AND STATIC PRESSURE

HORIZONTAL ECONOMIZER BAROMETRIC RELIEF

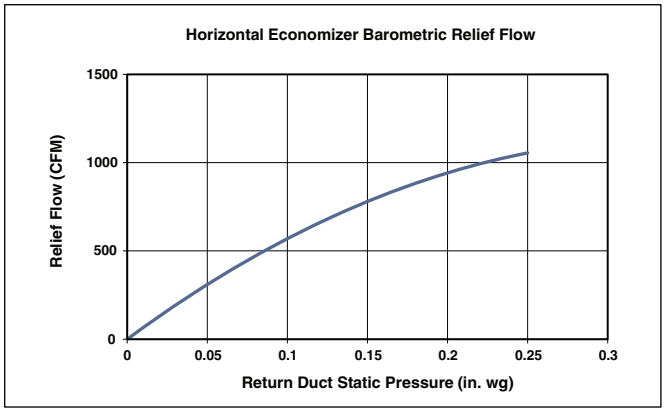

VERTICAL ECONOMIZER BAROMETRIC RELIEF

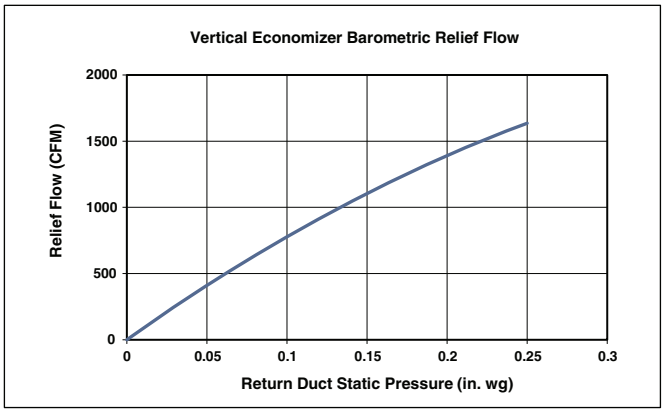

HORIZONTAL ECONOMIZER DAMPER LEAKAGE

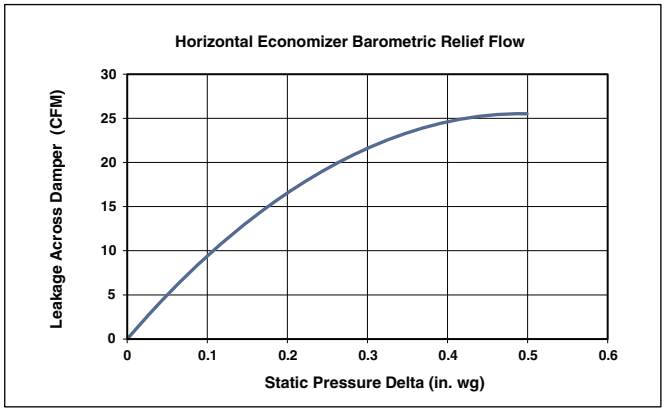

VERTICAL ECONOMIZER DAMPER LEAKAGE

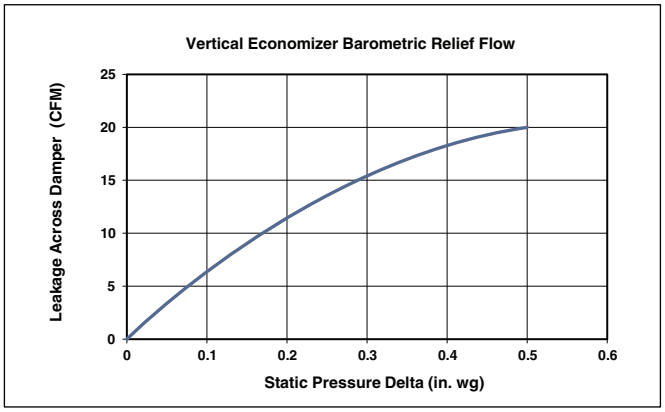

HUMIDI-MIZER® COIL PRESSURE DROPS

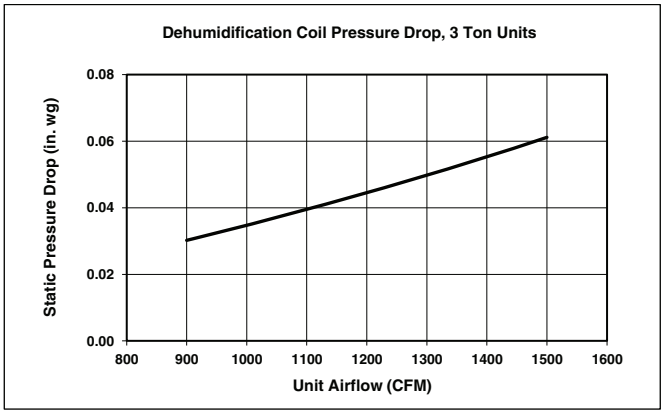

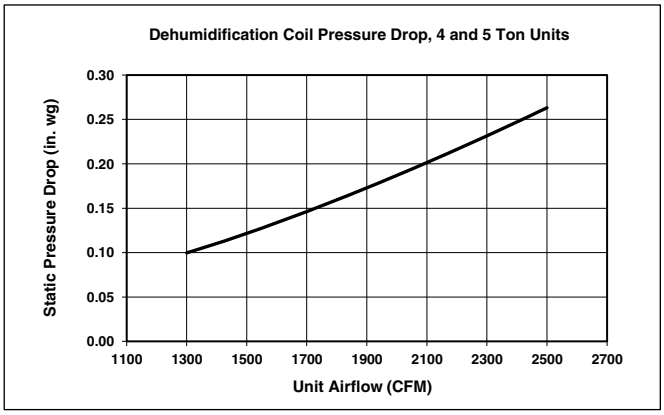

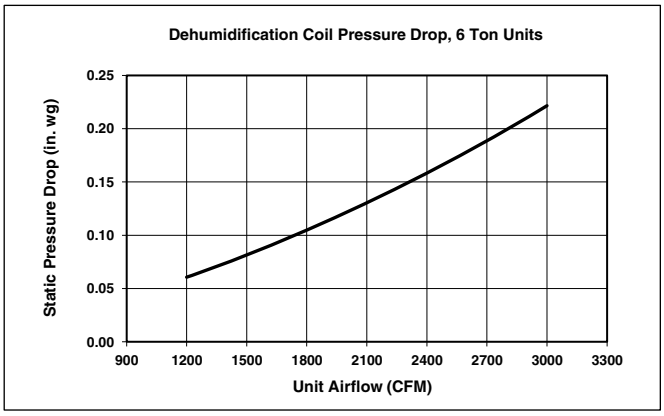

MERV-8 filters pressure drop

NOTE: For factory-installed MERV-8 filters, no additional pressure drop adjustments are necessary. The standard fan tables accommodate usage.

GENERAL FAN PERFORMANCE NOTES

1. Interpolation is permissible. Do not extrapolate.
2. External static pressure is the static pressure difference between the return duct and the supply duct plus the static pressure caused by any FIOPs or accessories.
3. Tabular data accounts for pressure loss due to clean filters, unit casing, wet coils, and highest gas heat exchanger (when gas heat unit).
4. Factory options and accessories may effect static pressure losses. Gas heat unit fan tables assume highest gas heat models; for fan selections with low or medium heat models, the user must deduct low and medium heat static pressures. Selection software is available, through your salesperson, to help you select the best motor/drive combination for your application.
5. The fan performance tables offer motor/drive recommendations. In cases when two motor/drive combinations would work, Carrier recommends the lower horsepower option.
6. For information on the electrical properties of Carrier motors, please see the Electrical information section of this book.
7. For more information on the performance limits of Carrier motors, see the application data section of this book.
8. The EPACT (Energy Policy Act of 1992) regulates energy requirements for specific types of indoor fan motors. Motors regulated by EPACT include any general purpose, T-frame (three-digit, 143 and larger), single-speed, foot mounted, polyphase, squirrel cage induction motors of NEMA (National Electrical Manufacturers Association) design A and B, manufactured for use in the United States. Ranging from 1 to 200 Hp, these continuous-duty motors operate on 230 and 460 volt, 60 Hz power. If a motor does not fit into these specifications, the motor does not have to be replaced by an EPACT compliant energy-efficient motor. Variable-speed motors are exempt from EPACT compliance requirements.

48FCEA04 SINGLE PHASE — 3 TON VERTICAL SUPPLY (RPM - BHP)

CFM	AVAILABLE EXTERNAL STATIC PRESSURE (in. wg)									
	0.2		0.4		0.6		0.8		1.0	
	RPM	BHP	RPM	BHP	RPM	BHP	RPM	BHP	RPM	BHP
900	1112	0.10	1341	0.17	1530	0.25	1696	0.34	1845	0.44
975	1162	0.11	1385	0.19	1571	0.27	1733	0.36	1881	0.46
1050	1213	0.12	1431	0.20	1613	0.29	1772	0.39	1917	0.49
1125	1265	0.14	1477	0.22	1656	0.32	1813	0.41	1956	0.52
1200	1319	0.16	1525	0.25	1700	0.34	1855	0.44	1996	0.55
1275	1374	0.18	1573	0.27	1746	0.37	1898	0.48	2037	0.59
1350	1430	0.20	1623	0.30	1792	0.40	1942	0.51	2079	0.63
1425	1487	0.23	1674	0.33	1839	0.43	1987	0.55	2122	0.67
1500	1545	0.26	1725	0.36	1887	0.47	2032	0.58	2165	0.71

CFM	AVAILABLE EXTERNAL STATIC PRESSURE (in. wg)									
	1.2		1.4		1.6		1.8		2.0	
	RPM	BHP	RPM	BHP	RPM	BHP	RPM	BHP	RPM	BHP
900	1983	0.54	2111	0.66	2231	0.77	2344	0.90	2452	1.03
975	2016	0.57	2143	0.69	2262	0.81	2375	0.93	2482	1.06
1050	2051	0.60	2177	0.72	2294	0.84	2406	0.97	–	–
1125	2088	0.63	2211	0.75	2328	0.88	2438	1.01	–	–
1200	2126	0.67	2248	0.79	2363	0.92	2472	1.05	–	–
1275	2165	0.71	2285	0.83	2399	0.96	–	–	–	–
1350	2205	0.75	2324	0.87	2437	1.01	–	–	–	–
1425	2247	0.79	2364	0.92	2475	1.06	–	–	–	–
1500	2289	0.84	2405	0.97	–	–	–	–	–	–

Standard Static 1112-1890 RPM, 0.44 Max BHP

Medium Static 1112-2190 RPM, 0.71 Max BHP

High Static 1112-2490 RPM, 1.07 Max BHP

NOTE: Fan tables include highest gas heat. Utilize static pressure deduction tables for lower gas heat capacities.

48FCEA04 SINGLE PHASE – STANDARD STATIC — 3 TON VERTICAL SUPPLY (RPM - VDC)

CFM	AVAILABLE EXTERNAL STATIC PRESSURE (in. wg)									
	0.2		0.4		0.6		0.8		1.0	
	RPM	Vdc	RPM	Vdc	RPM	Vdc	RPM	Vdc	RPM	Vdc
900	1112	5.9	1341	7.1	1530	8.1	1696	9.0	1845	9.8
975	1162	6.1	1385	7.3	1571	8.3	1733	9.2	—	—
1050	1213	6.4	1431	7.6	1613	8.5	1772	9.4	—	—
1125	1265	6.7	1477	7.8	1656	8.8	1813	9.6	—	—
1200	1319	7.0	1525	8.1	1700	9.0	1855	9.8	—	—
1275	1374	7.3	1573	8.3	1746	9.2	—	—	—	—
1350	1430	7.6	1623	8.6	1792	9.5	—	—	—	—
1425	1487	7.9	1674	8.9	1839	9.7	—	—	—	—
1500	1545	8.2	1725	9.1	—	—	—	—	—	—

CFM	AVAILABLE EXTERNAL STATIC PRESSURE (in. wg)									
	1.2		1.4		1.6		1.8		2.0	
	RPM	Vdc	RPM	Vdc	RPM	Vdc	RPM	Vdc	RPM	Vdc
900	—	—	—	—	—	—	—	—	—	—
975	—	—	—	—	—	—	—	—	—	—
1050	—	—	—	—	—	—	—	—	—	—
1125	—	—	—	—	—	—	—	—	—	—
1200	—	—	—	—	—	—	—	—	—	—
1275	—	—	—	—	—	—	—	—	—	—
1350	—	—	—	—	—	—	—	—	—	—
1425	—	—	—	—	—	—	—	—	—	—
1500	—	—	—	—	—	—	—	—	—	—

Standard Static 1112-1890 RPM

NOTE: Fan tables include highest gas heat. Utilize static pressure deduction tables for lower gas heat capacities.

Fan data (cont)

48FCEA04 SINGLE PHASE – MEDIUM STATIC — 3 TON VERTICAL SUPPLY (RPM - VDC)

CFM	AVAILABLE EXTERNAL STATIC PRESSURE (in. wg)									
	0.2		0.4		0.6		0.8		1.0	
	RPM	Vdc	RPM	Vdc	RPM	Vdc	RPM	Vdc	RPM	Vdc
900	1112	5.1	1341	6.1	1530	7.0	1696	7.7	1845	8.4
975	1162	5.3	1385	6.3	1571	7.2	1733	7.9	1881	8.6
1050	1213	5.5	1431	6.5	1613	7.4	1772	8.1	1917	8.8
1125	1265	5.8	1477	6.7	1656	7.6	1813	8.3	1956	8.9
1200	1319	6.0	1525	7.0	1700	7.8	1855	8.5	1996	9.1
1275	1374	6.3	1573	7.2	1746	8.0	1898	8.7	2037	9.3
1350	1430	6.5	1623	7.4	1792	8.2	1942	8.9	2079	9.5
1425	1487	6.8	1674	7.6	1839	8.4	1987	9.1	2122	9.7
1500	1545	7.1	1725	7.9	1887	8.6	2032	9.3	2165	9.9

CFM	AVAILABLE EXTERNAL STATIC PRESSURE (in. wg)									
	1.2		1.4		1.6		1.8		2.0	
	RPM	Vdc	RPM	Vdc	RPM	Vdc	RPM	Vdc	RPM	Vdc
900	1983	9.1	2111	9.6	—	—	—	—	—	—
975	2016	9.2	2143	9.8	—	—	—	—	—	—
1050	2051	9.4	—	—	—	—	—	—	—	—
1125	2088	9.5	—	—	—	—	—	—	—	—
1200	2126	9.7	—	—	—	—	—	—	—	—
1275	2165	9.9	—	—	—	—	—	—	—	—
1350	—	—	—	—	—	—	—	—	—	—
1425	—	—	—	—	—	—	—	—	—	—
1500	—	—	—	—	—	—	—	—	—	—

Medium Static 1112-2190 RPM

NOTE: Fan tables include highest gas heat. Utilize static pressure deduction tables for lower gas heat capacities.

48FCEA04 SINGLE PHASE – HIGH STATIC — 3 TON VERTICAL SUPPLY (PRM - VDC)

CFM	AVAILABLE EXTERNAL STATIC PRESSURE (in. wg)									
	0.2		0.4		0.6		0.8		1.0	
	RPM	Vdc	RPM	Vdc	RPM	Vdc	RPM	Vdc	RPM	Vdc
900	1112	4.5	1341	5.4	1530	6.1	1696	6.8	1845	7.4
975	1162	4.7	1385	5.6	1571	6.3	1733	7.0	1881	7.6
1050	1213	4.9	1431	5.7	1613	6.5	1772	7.1	1917	7.7
1125	1265	5.1	1477	5.9	1656	6.7	1813	7.3	1956	7.9
1200	1319	5.3	1525	6.1	1700	6.8	1855	7.4	1996	8.0
1275	1374	5.5	1573	6.3	1746	7.0	1898	7.6	2037	8.2
1350	1430	5.7	1623	6.5	1792	7.2	1942	7.8	2079	8.3
1425	1487	6.0	1674	6.7	1839	7.4	1987	8.0	2122	8.5
1500	1545	6.2	1725	6.9	1887	7.6	2032	8.2	2165	8.7

CFM	AVAILABLE EXTERNAL STATIC PRESSURE (in. wg)									
	1.2		1.4		1.6		1.8		2.0	
	RPM	Vdc	RPM	Vdc	RPM	Vdc	RPM	Vdc	RPM	Vdc
900	1983	8.0	2111	8.5	2231	9.0	2344	9.4	2452	9.8
975	2016	8.1	2143	8.6	2262	9.1	2375	9.5	2482	10.0
1050	2051	8.2	2177	8.7	2294	9.2	2406	9.7	—	—
1125	2088	8.4	2211	8.9	2328	9.3	2438	9.8	—	—
1200	2126	8.5	2248	9.0	2363	9.5	2472	9.9	—	—
1275	2165	8.7	2285	9.2	2399	9.6	—	—	—	—
1350	2205	8.9	2324	9.3	2437	9.8	—	—	—	—
1425	2247	9.0	2364	9.5	2475	9.9	—	—	—	—
1500	2289	9.2	2405	9.7	—	—	—	—	—	—

High Static 1112-2490 RPM

NOTE: Fan tables include highest gas heat. Utilize static pressure deduction tables for lower gas heat capacities.

48FCEA04 THREE PHASE — 3 TON VERTICAL SUPPLY (RPM - BHP)

CFM	AVAILABLE EXTERNAL STATIC PRESSURE (in. wg)									
	0.2		0.4		0.6		0.8		1.0	
	RPM	BHP	RPM	BHP	RPM	BHP	RPM	BHP	RPM	BHP
900	1112	0.10	1341	0.17	1530	0.25	1696	0.34	1845	0.44
975	1162	0.11	1385	0.19	1571	0.27	1733	0.36	1881	0.46
1050	1213	0.12	1431	0.20	1613	0.29	1772	0.39	1917	0.49
1125	1265	0.14	1477	0.22	1656	0.32	1813	0.41	1956	0.52
1200	1319	0.16	1525	0.25	1700	0.34	1855	0.44	1996	0.55
1275	1374	0.18	1573	0.27	1746	0.37	1898	0.48	2037	0.59
1350	1430	0.20	1623	0.30	1792	0.40	1942	0.51	2079	0.63
1425	1487	0.23	1674	0.33	1839	0.43	1987	0.55	2122	0.67
1500	1545	0.26	1725	0.36	1887	0.47	2032	0.58	2165	0.71

CFM	AVAILABLE EXTERNAL STATIC PRESSURE (in. wg)									
	1.2		1.4		1.6		1.8		2.0	
	RPM	BHP	RPM	BHP	RPM	BHP	RPM	BHP	RPM	BHP
900	1983	0.54	2111	0.66	2231	0.77	2344	0.90	2452	1.03
975	2016	0.57	2143	0.69	2262	0.81	2375	0.93	2482	1.06
1050	2051	0.60	2177	0.72	2294	0.84	2406	0.97	—	—
1125	2088	0.63	2211	0.75	2328	0.88	2438	1.01	—	—
1200	2126	0.67	2248	0.79	2363	0.92	2472	1.05	—	—
1275	2165	0.71	2285	0.83	2399	0.96	—	—	—	—
1350	2205	0.75	2324	0.87	2437	1.01	—	—	—	—
1425	2247	0.79	2364	0.92	2475	1.06	—	—	—	—
1500	2289	0.84	2405	0.97	—	—	—	—	—	—

Standard Static 1112-1890 RPM, 0.44 Max BHP

Medium Static 1112-2190 RPM, 0.71 Max BHP

High Static 1112-2490 RPM, 1.07 Max BHP

NOTE: Fan tables include highest gas heat. Utilize static pressure deduction tables for lower gas heat capacities.

48FCEA04 THREE PHASE – STANDARD STATIC — 3 TON VERTICAL SUPPLY (RPM - VDC)

CFM	AVAILABLE EXTERNAL STATIC PRESSURE (in. wg)									
	0.2		0.4		0.6		0.8		1.0	
	RPM	Vdc	RPM	Vdc	RPM	Vdc	RPM	Vdc	RPM	Vdc
900	1112	5.9	1341	7.1	1530	8.1	1696	9.0	1845	9.8
975	1162	6.1	1385	7.3	1571	8.3	1733	9.2	—	—
1050	1213	6.4	1431	7.6	1613	8.5	1772	9.4	—	—
1125	1265	6.7	1477	7.8	1656	8.8	1813	9.6	—	—
1200	1319	7.0	1525	8.1	1700	9.0	1855	9.8	—	—
1275	1374	7.3	1573	8.3	1746	9.2	—	—	—	—
1350	1430	7.6	1623	8.6	1792	9.5	—	—	—	—
1425	1487	7.9	1674	8.9	1839	9.7	—	—	—	—
1500	1545	8.2	1725	9.1	—	—	—	—	—	—

CFM	AVAILABLE EXTERNAL STATIC PRESSURE (in. wg)									
	1.2		1.4		1.6		1.8		2.0	
	RPM	Vdc	RPM	Vdc	RPM	Vdc	RPM	Vdc	RPM	Vdc
900	—	—	—	—	—	—	—	—	—	—
975	—	—	—	—	—	—	—	—	—	—
1050	—	—	—	—	—	—	—	—	—	—
1125	—	—	—	—	—	—	—	—	—	—
1200	—	—	—	—	—	—	—	—	—	—
1275	—	—	—	—	—	—	—	—	—	—
1350	—	—	—	—	—	—	—	—	—	—
1425	—	—	—	—	—	—	—	—	—	—
1500	—	—	—	—	—	—	—	—	—	—

Standard Static 1112-1890 RPM

NOTE: Fan tables include highest gas heat. Utilize static pressure deduction tables for lower gas heat capacities.

Fan data (cont)

48FCEA04 THREE PHASE – MEDIUM STATIC — 3 TON VERTICAL SUPPLY (RPM - VDC)

CFM	AVAILABLE EXTERNAL STATIC PRESSURE (in. wg)									
	0.2		0.4		0.6		0.8		1.0	
	RPM	Vdc	RPM	Vdc	RPM	Vdc	RPM	Vdc	RPM	Vdc
900	1112	5.1	1341	6.1	1530	7.0	1696	7.7	1845	8.4
975	1162	5.3	1385	6.3	1571	7.2	1733	7.9	1881	8.6
1050	1213	5.5	1431	6.5	1613	7.4	1772	8.1	1917	8.8
1125	1265	5.8	1477	6.7	1656	7.6	1813	8.3	1956	8.9
1200	1319	6.0	1525	7.0	1700	7.8	1855	8.5	1996	9.1
1275	1374	6.3	1573	7.2	1746	8.0	1898	8.7	2037	9.3
1350	1430	6.5	1623	7.4	1792	8.2	1942	8.9	2079	9.5
1425	1487	6.8	1674	7.6	1839	8.4	1987	9.1	2122	9.7
1500	1545	7.1	1725	7.9	1887	8.6	2032	9.3	2165	9.9

CFM	AVAILABLE EXTERNAL STATIC PRESSURE (in. wg)									
	1.2		1.4		1.6		1.8		2.0	
	RPM	Vdc	RPM	Vdc	RPM	Vdc	RPM	Vdc	RPM	Vdc
900	1983	9.1	2111	9.6	—	—	—	—	—	—
975	2016	9.2	2143	9.8	—	—	—	—	—	—
1050	2051	9.4	—	—	—	—	—	—	—	—
1125	2088	9.5	—	—	—	—	—	—	—	—
1200	2126	9.7	—	—	—	—	—	—	—	—
1275	2165	9.9	—	—	—	—	—	—	—	—
1350	—	—	—	—	—	—	—	—	—	—
1425	—	—	—	—	—	—	—	—	—	—
1500	—	—	—	—	—	—	—	—	—	—

Medium Static 1112-2190 RPM

NOTE: Fan tables include highest gas heat. Utilize static pressure deduction tables for lower gas heat capacities.

48FCEA04 THREE PHASE – HIGH STATIC — 3 TON VERTICAL SUPPLY (RPM - VDC)

CFM	AVAILABLE EXTERNAL STATIC PRESSURE (in. wg)									
	0.2		0.4		0.6		0.8		1.0	
	RPM	Vdc	RPM	Vdc	RPM	Vdc	RPM	Vdc	RPM	Vdc
900	1112	4.5	1341	5.4	1530	6.1	1696	6.8	1845	7.4
975	1162	4.7	1385	5.6	1571	6.3	1733	7.0	1881	7.6
1050	1213	4.9	1431	5.7	1613	6.5	1772	7.1	1917	7.7
1125	1265	5.1	1477	5.9	1656	6.7	1813	7.3	1956	7.9
1200	1319	5.3	1525	6.1	1700	6.8	1855	7.4	1996	8.0
1275	1374	5.5	1573	6.3	1746	7.0	1898	7.6	2037	8.2
1350	1430	5.7	1623	6.5	1792	7.2	1942	7.8	2079	8.3
1425	1487	6.0	1674	6.7	1839	7.4	1987	8.0	2122	8.5
1500	1545	6.2	1725	6.9	1887	7.6	2032	8.2	2165	8.7

CFM	AVAILABLE EXTERNAL STATIC PRESSURE (in. wg)									
	1.2		1.4		1.6		1.8		2.0	
	RPM	Vdc	RPM	Vdc	RPM	Vdc	RPM	Vdc	RPM	Vdc
900	1983	8.0	2111	8.5	2231	9.0	2344	9.4	2452	9.8
975	2016	8.1	2143	8.6	2262	9.1	2375	9.5	2482	10.0
1050	2051	8.2	2177	8.7	2294	9.2	2406	9.7	—	—
1125	2088	8.4	2211	8.9	2328	9.3	2438	9.8	—	—
1200	2126	8.5	2248	9.0	2363	9.5	2472	9.9	—	—
1275	2165	8.7	2285	9.2	2399	9.6	—	—	—	—
1350	2205	8.9	2324	9.3	2437	9.8	—	—	—	—
1425	2247	9.0	2364	9.5	2475	9.9	—	—	—	—
1500	2289	9.2	2405	9.7	—	—	—	—	—	—

High Static 1112-2490 RPM

NOTE: Fan tables include highest gas heat. Utilize static pressure deduction tables for lower gas heat capacities.

48FCFA05 SINGLE PHASE — 4 TON VERTICAL SUPPLY (RPM - BHP)

CFM	AVAILABLE EXTERNAL STATIC PRESSURE (in. wg)									
	0.2		0.4		0.6		0.8		1.0	
	RPM	BHP	RPM	BHP	RPM	BHP	RPM	BHP	RPM	BHP
1200	1262	0.21	1452	0.33	1614	0.45	1757	0.58	1888	0.72
1300	1333	0.25	1516	0.37	1674	0.50	1813	0.63	1942	0.78
1400	1405	0.29	1583	0.42	1735	0.55	1872	0.70	1997	0.84
1500	1478	0.34	1650	0.48	1798	0.62	1932	0.76	2054	0.92
1600	1552	0.40	1718	0.54	1863	0.68	1993	0.84	2114	1.00
1700	1627	0.46	1787	0.60	1928	0.76	2057	0.92	2174	1.09
1800	1704	0.52	1857	0.68	1995	0.84	2121	1.01	2236	1.18
1900	1781	0.60	1929	0.76	2063	0.93	2185	1.10	2299	1.28
2000	1859	0.68	2001	0.85	2132	1.02	2252	1.21	2363	1.39

CFM	AVAILABLE EXTERNAL STATIC PRESSURE (in. wg)									
	1.2		1.4		1.6		1.8		2.0	
	RPM	BHP	RPM	BHP	RPM	BHP	RPM	BHP	RPM	BHP
1200	2011	0.87	2126	1.02	2236	1.19	2341	1.37	2442	1.55
1300	2061	0.93	2174	1.09	2281	1.26	2384	1.44	—	—
1400	2114	1.00	2224	1.17	2329	1.34	2429	1.52	—	—
1500	2169	1.08	2277	1.25	2379	1.43	—	—	—	—
1600	2226	1.17	2331	1.34	2432	1.52	—	—	—	—
1700	2284	1.26	2388	1.44	—	—	—	—	—	—
1800	2344	1.36	2446	1.55	—	—	—	—	—	—
1900	2405	1.47	—	—	—	—	—	—	—	—
2000	—	—	—	—	—	—	—	—	—	—

Standard Static 1262-1900 RPM, 0.72 Max BHP

Medium Static 1262-2170 RPM, 1.06 Max BHP

High Static 1262-2460 RPM, 1.53 Max BHP

NOTE: Fan tables include highest gas heat. Utilize static pressure deduction tables for lower gas heat capacities.

48FCFA05 SINGLE PHASE – STANDARD STATIC — 4 TON VERTICAL SUPPLY (RPM - VDC)

CFM	AVAILABLE EXTERNAL STATIC PRESSURE (in. wg)									
	0.2		0.4		0.6		0.8		1.0	
	RPM	Vdc	RPM	Vdc	RPM	Vdc	RPM	Vdc	RPM	Vdc
1200	1262	6.6	1452	7.6	1614	8.5	1757	9.2	1888	9.9
1300	1333	7.0	1516	8.0	1674	8.8	1813	9.5	—	—
1400	1405	7.4	1583	8.3	1735	9.1	1872	9.9	—	—
1500	1478	7.8	1650	8.7	1798	9.5	—	—	—	—
1600	1552	8.2	1718	9.0	1863	9.8	—	—	—	—
1700	1627	8.6	1787	9.4	—	—	—	—	—	—
1800	1704	9.0	1857	9.8	—	—	—	—	—	—
1900	1781	9.4	—	—	—	—	—	—	—	—
2000	1859	9.8	—	—	—	—	—	—	—	—

CFM	AVAILABLE EXTERNAL STATIC PRESSURE (in. wg)									
	1.2		1.4		1.6		1.8		2.0	
	RPM	Vdc	RPM	Vdc	RPM	Vdc	RPM	Vdc	RPM	Vdc
1200	—	—	—	—	—	—	—	—	—	—
1300	—	—	—	—	—	—	—	—	—	—
1400	—	—	—	—	—	—	—	—	—	—
1500	—	—	—	—	—	—	—	—	—	—
1600	—	—	—	—	—	—	—	—	—	—
1700	—	—	—	—	—	—	—	—	—	—
1800	—	—	—	—	—	—	—	—	—	—
1900	—	—	—	—	—	—	—	—	—	—
2000	—	—	—	—	—	—	—	—	—	—

Standard Static 1262-1900 RPM

NOTE: Fan tables include highest gas heat. Utilize static pressure deduction tables for lower gas heat capacities.

48FCFA05 SINGLE PHASE – MEDIUM STATIC — 4 TON VERTICAL SUPPLY (RPM - VDC)

CFM	AVAILABLE EXTERNAL STATIC PRESSURE (in. wg)									
	0.2		0.4		0.6		0.8		1.0	
	RPM	Vdc	RPM	Vdc	RPM	Vdc	RPM	Vdc	RPM	Vdc
1200	1262	5.8	1452	6.7	1614	7.4	1757	8.1	1888	8.7
1300	1333	6.1	1516	7.0	1674	7.7	1813	8.4	1942	8.9
1400	1405	6.5	1583	7.3	1735	8.0	1872	8.6	1997	9.2
1500	1478	6.8	1650	7.6	1798	8.3	1932	8.9	2054	9.5
1600	1552	7.2	1718	7.9	1863	8.6	1993	9.2	2114	9.7
1700	1627	7.5	1787	8.2	1928	8.9	2057	9.5	—	—
1800	1704	7.9	1857	8.6	1995	9.2	2121	9.8	—	—
1900	1781	8.2	1929	8.9	2063	9.5	—	—	—	—
2000	1859	8.6	2001	9.2	2132	9.8	—	—	—	—

CFM	AVAILABLE EXTERNAL STATIC PRESSURE (in. wg)									
	1.2		1.4		1.6		1.8		2.0	
	RPM	Vdc	RPM	Vdc	RPM	Vdc	RPM	Vdc	RPM	Vdc
1200	2011	9.3	2126	9.8	—	—	—	—	—	—
1300	2061	9.5	—	—	—	—	—	—	—	—
1400	2114	9.7	—	—	—	—	—	—	—	—
1500	2169	10.0	—	—	—	—	—	—	—	—
1600	—	—	—	—	—	—	—	—	—	—
1700	—	—	—	—	—	—	—	—	—	—
1800	—	—	—	—	—	—	—	—	—	—
1900	—	—	—	—	—	—	—	—	—	—
2000	—	—	—	—	—	—	—	—	—	—

Medium Static 1262-2170 RPM

NOTE: Fan tables include highest gas heat. Utilize static pressure deduction tables for lower gas heat capacities.

48FCFA05 SINGLE PHASE – HIGH STATIC — 4 TON VERTICAL SUPPLY (RPM - VDC)

CFM	AVAILABLE EXTERNAL STATIC PRESSURE (in. wg)									
	0.2		0.4		0.6		0.8		1.0	
	RPM	Vdc	RPM	Vdc	RPM	Vdc	RPM	Vdc	RPM	Vdc
1200	1262	5.1	1452	5.9	1614	6.6	1757	7.1	1888	7.7
1300	1333	5.4	1516	6.2	1674	6.8	1813	7.4	1942	7.9
1400	1405	5.7	1583	6.4	1735	7.1	1872	7.6	1997	8.1
1500	1478	6.0	1650	6.7	1798	7.3	1932	7.9	2054	8.3
1600	1552	6.3	1718	7.0	1863	7.6	1993	8.1	2114	8.6
1700	1627	6.6	1787	7.3	1928	7.8	2057	8.4	2174	8.8
1800	1704	6.9	1857	7.5	1995	8.1	2121	8.6	2236	9.1
1900	1781	7.2	1929	7.8	2063	8.4	2185	8.9	2299	9.3
2000	1859	7.6	2001	8.1	2132	8.7	2252	9.2	2363	9.6

CFM	AVAILABLE EXTERNAL STATIC PRESSURE (in. wg)									
	1.2		1.4		1.6		1.8		2.0	
	RPM	Vdc	RPM	Vdc	RPM	Vdc	RPM	Vdc	RPM	Vdc
1200	2011	8.2	2126	8.6	2236	9.1	2341	9.5	2442	9.9
1300	2061	8.4	2174	8.8	2281	9.3	2384	9.7	—	—
1400	2114	8.6	2224	9.0	2329	9.5	2429	9.9	—	—
1500	2169	8.8	2277	9.3	2379	9.7	—	—	—	—
1600	2226	9.0	2331	9.5	2432	9.9	—	—	—	—
1700	2284	9.3	2388	9.7	—	—	—	—	—	—
1800	2344	9.5	2446	9.9	—	—	—	—	—	—
1900	2405	9.8	—	—	—	—	—	—	—	—
2000	—	—	—	—	—	—	—	—	—	—

High Static 1262-2460 RPM

NOTE: Fan tables include highest gas heat. Utilize static pressure deduction tables for lower gas heat capacities.

48FCFA05 THREE PHASE — 4 TON VERTICAL SUPPLY (RPM - BHP)

CFM	AVAILABLE EXTERNAL STATIC PRESSURE (in. wg)									
	0.2		0.4		0.6		0.8		1.0	
	RPM	BHP	RPM	BHP	RPM	BHP	RPM	BHP	RPM	BHP
1200	1262	0.21	1453	0.33	1614	0.45	1757	0.58	1888	0.72
1300	1333	0.25	1517	0.37	1674	0.50	1814	0.63	1942	0.78
1400	1405	0.29	1583	0.42	1736	0.56	1872	0.70	1998	0.85
1500	1478	0.34	1650	0.48	1799	0.62	1932	0.76	2055	0.92
1600	1553	0.40	1718	0.54	1863	0.68	1994	0.84	2114	1.00
1700	1628	0.46	1787	0.60	1929	0.76	2057	0.92	2174	1.09
1800	1704	0.52	1858	0.68	1995	0.84	2121	1.01	2236	1.18
1900	1781	0.60	1929	0.76	2063	0.93	2186	1.10	2299	1.28
2000	1859	0.68	2001	0.85	2132	1.02	2252	1.21	2363	1.39

CFM	AVAILABLE EXTERNAL STATIC PRESSURE (in. wg)									
	1.2		1.4		1.6		1.8		2.0	
	RPM	BHP	RPM	BHP	RPM	BHP	RPM	BHP	RPM	BHP
1200	2011	0.87	2126	1.02	2236	1.19	2341	1.37	2442	1.55
1300	2061	0.93	2174	1.09	2281	1.26	2383	1.44	2482	1.62
1400	2114	1.00	2224	1.17	2329	1.34	2429	1.52	2526	1.71
1500	2169	1.08	2277	1.25	2379	1.43	2478	1.61	2572	1.80
1600	2226	1.17	2332	1.34	2432	1.52	2528	1.71	2621	1.91
1700	2284	1.26	2388	1.44	2487	1.63	2581	1.82	—	—
1800	2344	1.36	2446	1.55	2543	1.74	2636	1.94	—	—
1900	2405	1.47	2505	1.66	2600	1.86	—	—	—	—
2000	2467	1.59	2566	1.79	2659	1.99	—	—	—	—

Standard Static 1262-1900 RPM, 0.72 Max BHP

Medium Static 1262-2170 RPM, 1.06 Max BHP

High Static 1262-2660 RPM, 1.92 Max BHP

NOTE: Fan tables include highest gas heat. Utilize static pressure deduction tables for lower gas heat capacities.

48FCFA05 THREE PHASE – STANDARD STATIC — 4 TON VERTICAL SUPPLY (RPM - VDC)

CFM	AVAILABLE EXTERNAL STATIC PRESSURE (in. wg)									
	0.2		0.4		0.6		0.8		1.0	
	RPM	Vdc	RPM	Vdc	RPM	Vdc	RPM	Vdc	RPM	Vdc
1200	1262	6.6	1453	7.6	1614	8.5	1757	9.2	1888	9.9
1300	1333	7.0	1517	8.0	1674	8.8	1814	9.5	—	—
1400	1405	7.4	1583	8.3	1736	9.1	1872	9.9	—	—
1500	1478	7.8	1650	8.7	1799	9.5	—	—	—	—
1600	1553	8.2	1718	9.0	1863	9.8	—	—	—	—
1700	1628	8.6	1787	9.4	—	—	—	—	—	—
1800	1704	9.0	1858	9.8	—	—	—	—	—	—
1900	1781	9.4	—		—	—	—	—	—	—
2000	1859	9.8	—	—	—	—	—	—	—	—

CFM	AVAILABLE EXTERNAL STATIC PRESSURE (in. wg)									
	1.2		1.4		1.6		1.8		2.0	
	RPM	Vdc	RPM	Vdc	RPM	Vdc	RPM	Vdc	RPM	Vdc
1200	—	—	—	—	—	—	—	—	—	—
1300	—	—	—	—	—	—	—	—	—	—
1400	—	—	—	—	—	—	—	—	—	—
1500	—	—	—	—	—	—	—	—	—	—
1600	—	—	—	—	—	—	—	—	—	—
1700	—	—	—	—	—	—	—	—	—	—
1800	—	—	—	—	—	—	—	—	—	—
1900	—	—	—	—	—	—	—	—	—	—
2000	—	—	—	—	—	—	—	—	—	—

Standard Static 1262-1900 RPM

NOTE: Fan tables include highest gas heat. Utilize static pressure deduction tables for lower gas heat capacities.

Fan data (cont)

48FCFA05 THREE PHASE – MEDIUM STATIC — 4 TON VERTICAL SUPPLY (RPM - VDC)

CFM	AVAILABLE EXTERNAL STATIC PRESSURE (in. wg)									
	0.2		0.4		0.6		0.8		1.0	
	RPM	Vdc	RPM	Vdc	RPM	Vdc	RPM	Vdc	RPM	Vdc
1200	1262	5.8	1453	6.7	1614	7.4	1757	8.1	1888	8.7
1300	1333	6.1	1517	7.0	1674	7.7	1814	8.4	1942	8.9
1400	1405	6.5	1583	7.3	1736	8.0	1872	8.6	1998	9.2
1500	1478	6.8	1650	7.6	1799	8.3	1932	8.9	2055	9.5
1600	1553	7.2	1718	7.9	1863	8.6	1994	9.2	2114	9.7
1700	1628	7.5	1787	8.2	1929	8.9	2057	9.5	—	—
1800	1704	7.9	1858	8.6	1995	9.2	2121	9.8	—	—
1900	1781	8.2	1929	8.9	2063	9.5	—	—	—	—
2000	1859	8.6	2001	9.2	2132	9.8	—	—	—	—

CFM	AVAILABLE EXTERNAL STATIC PRESSURE (in. wg)									
	1.2		1.4		1.6		1.8		2.0	
	RPM	Vdc	RPM	Vdc	RPM	Vdc	RPM	Vdc	RPM	Vdc
1200	2011	9.3	2126	9.8	—	—	—	—	—	—
1300	2061	9.5	—	—	—	—	—	—	—	—
1400	2114	9.7	—	—	—	—	—	—	—	—
1500	2169	10.0	—	—	—	—	—	—	—	—
1600	—	—	—	—	—	—	—	—	—	—
1700	—	—	—	—	—	—	—	—	—	—
1800	—	—	—	—	—	—	—	—	—	—
1900	—	—	—	—	—	—	—	—	—	—
2000	—	—	—	—	—	—	—	—	—	—

Medium Static 1262-2170 RPM

NOTE: Fan tables include highest gas heat. Utilize static pressure deduction tables for lower gas heat capacities.

48FCFA05 THREE PHASE – HIGH STATIC — 4 TON VERTICAL SUPPLY (RPM - VDC)

CFM	AVAILABLE EXTERNAL STATIC PRESSURE (in. wg)									
	0.2		0.4		0.6		0.8		1.0	
	RPM	Vdc	RPM	Vdc	RPM	Vdc	RPM	Vdc	RPM	Vdc
1200	1262	4.7	1453	5.5	1614	6.1	1757	6.6	1888	7.1
1300	1333	5.0	1517	5.7	1674	6.3	1814	6.8	1942	7.3
1400	1405	5.3	1583	6.0	1736	6.5	1872	7.0	1998	7.5
1500	1478	5.6	1650	6.2	1799	6.8	1932	7.3	2055	7.7
1600	1553	5.8	1718	6.5	1863	7.0	1994	7.5	2114	7.9
1700	1628	6.1	1787	6.7	1929	7.3	2057	7.7	2174	8.2
1800	1704	6.4	1858	7.0	1995	7.5	2121	8.0	2236	8.4
1900	1781	6.7	1929	7.3	2063	7.8	2186	8.2	2299	8.6
2000	1859	7.0	2001	7.5	2132	8.0	2252	8.5	2363	8.9

CFM	AVAILABLE EXTERNAL STATIC PRESSURE (in. wg)									
	1.2		1.4		1.6		1.8		2.0	
	RPM	Vdc	RPM	Vdc	RPM	Vdc	RPM	Vdc	RPM	Vdc
1200	2011	7.6	2126	8.0	2236	8.4	2341	8.8	2442	9.2
1300	2061	7.7	2174	8.2	2281	8.6	2383	9.0	2482	9.3
1400	2114	7.9	2224	8.4	2329	8.8	2429	9.1	2526	9.5
1500	2169	8.2	2277	8.6	2379	8.9	2478	9.3	2572	9.7
1600	2226	8.4	2332	8.8	2432	9.1	2528	9.5	2621	9.9
1700	2284	8.6	2388	9.0	2487	9.3	2581	9.7	—	—
1800	2344	8.8	2446	9.2	2543	9.6	2636	9.9	—	—
1900	2405	9.0	2505	9.4	2600	9.8	—	—	—	—
2000	2467	9.3	2566	9.6	2659	10.0	—	—	—	—

High Static 1262-2660 RPM

NOTE: Fan tables include highest gas heat. Utilize static pressure deduction tables for lower gas heat capacities.

48FCFA06 SINGLE PHASE — 5 TON VERTICAL SUPPLY (RPM - BHP)

CFM	AVAILABLE EXTERNAL STATIC PRESSURE (in. wg)									
	0.2		0.4		0.6		0.8		1.0	
	RPM	BHP	RPM	BHP	RPM	BHP	RPM	BHP	RPM	BHP
1500	1478	0.34	1650	0.48	1799	0.62	1932	0.76	2055	0.92
1625	1571	0.41	1735	0.55	1879	0.70	2009	0.86	2129	1.02
1750	1666	0.49	1822	0.64	1962	0.80	2088	0.96	2205	1.13
1875	1761	0.58	1910	0.74	2046	0.91	2169	1.08	2283	1.26
2000	1859	0.68	2001	0.85	2132	1.02	2252	1.21	2363	1.39
2125	1957	0.79	2093	0.97	2218	1.15	2335	1.34	—	—
2250	2056	0.92	2185	1.10	2307	1.30	—	—	—	—
2375	2155	1.06	2279	1.25	—	—	—	—	—	—
2500	2256	1.21	2374	1.41	—	—	—	—	—	—

CFM	AVAILABLE EXTERNAL STATIC PRESSURE (in. wg)									
	1.2		1.4		1.6		1.8		2.0	
	RPM	BHP	RPM	BHP	RPM	BHP	RPM	BHP	RPM	BHP
1500	2169	1.08	2277	1.25	2379	1.43	—	—	—	—
1625	2240	1.19	2345	1.37	—	—	—	—	—	—
1750	2314	1.31	—	—	—	—	—	—	—	—
1875	2389	1.44	—	—	—	—	—	—	—	—
2000	—	—	—	—	—	—	—	—	—	—
2125	—	—	—	—	—	—	—	—	—	—
2250	—	—	—	—	—	—	—	—	—	—
2375	—	—	—	—	—	—	—	—	—	—
2500	—	—	—	—	—	—	—	—	—	—

Standard Static 1478-2150 RPM, 1.06 Max BHP

Medium Static 1478-2390 RPM, 1.44 Max BHP

NOTE: Fan tables include highest gas heat. Utilize static pressure deduction tables for lower gas heat capacities.

48FCFA06 SINGLE PHASE – STANDARD STATIC — 5 TON VERTICAL SUPPLY (RPM - VDC)

CFM	AVAILABLE EXTERNAL STATIC PRESSURE (in. wg)									
	0.2		0.4		0.6		0.8		1.0	
	RPM	Vdc	RPM	Vdc	RPM	Vdc	RPM	Vdc	RPM	Vdc
1500	1478	6.9	1650	7.7	1799	8.4	1932	9.0	2055	9.6
1625	1571	7.3	1735	8.1	1879	8.7	2009	9.3	2129	9.9
1750	1666	7.7	1822	8.5	1962	9.1	2088	9.7	—	—
1875	1761	8.2	1910	8.9	2046	9.5	—	—	—	—
2000	1859	8.6	2001	9.3	2132	9.9	—	—	—	—
2125	1957	9.1	2093	9.7	—	—	—	—	—	—
2250	2056	9.6	—	—	—	—	—	—	—	—
2375	—	—	—	—	—	—	—	—	—	—
2500	—	—	—	—	—	—	—	—	—	—

CFM	AVAILABLE EXTERNAL STATIC PRESSURE (in. wg)									
	1.2		1.4		1.6		1.8		2.0	
	RPM	Vdc	RPM	Vdc	RPM	Vdc	RPM	Vdc	RPM	Vdc
1500	—	—	—	—	—	—	—	—	—	—
1625	—	—	—	—	—	—	—	—	—	—
1750	—	—	—	—	—	—	—	—	—	—
1875	—	—	—	—	—	—	—	—	—	—
2000	—	—	—	—	—	—	—	—	—	—
2125	—	—	—	—	—	—	—	—	—	—
2250	—	—	—	—	—	—	—	—	—	—
2375	—	—	—	—	—	—	—	—	—	—
2500	—	—	—	—	—	—	—	—	—	—

Standard Static 1478-2150 RPM

NOTE: Fan tables include highest gas heat. Utilize static pressure deduction tables for lower gas heat capacities.

Fan data (cont)

48FCFA06 SINGLE PHASE – MEDIUM STATIC — 5 TON VERTICAL SUPPLY (RPM - VDC)

CFM	AVAILABLE EXTERNAL STATIC PRESSURE (in. wg)									
	0.2		0.4		0.6		0.8		1.0	
	RPM	Vdc	RPM	Vdc	RPM	Vdc	RPM	Vdc	RPM	Vdc
1500	1478	6.2	1650	6.9	1799	7.5	1932	8.1	2055	8.6
1625	1571	6.6	1735	7.3	1879	7.9	2009	8.4	2129	8.9
1750	1666	7.0	1822	7.6	1962	8.2	2088	8.7	2205	9.2
1875	1761	7.4	1910	8.0	2046	8.6	2169	9.1	2283	9.6
2000	1859	7.8	2001	8.4	2132	8.9	2252	9.4	2363	9.9
2125	1957	8.2	2093	8.8	2218	9.3	2335	9.8	—	—
2250	2056	8.6	2185	9.1	2307	9.7	—	—	—	—
2375	2155	9.0	2279	9.5	—	—	—	—	—	—
2500	2256	9.4	2374	9.9	—	—	—	—	—	—

CFM	AVAILABLE EXTERNAL STATIC PRESSURE (in. wg)									
	1.2		1.4		1.6		1.8		2.0	
	RPM	Vdc	RPM	Vdc	RPM	Vdc	RPM	Vdc	RPM	Vdc
1500	2169	9.1	2277	9.5	2379	10.0	—	—	—	—
1625	2240	9.4	2345	9.8	—	—	—	—	—	—
1750	2314	9.7	—	—	—	—	—	—	—	—
1875	2389	10.0	—	—	—	—	—	—	—	—
2000	—	—	—	—	—	—	—	—	—	—
2125	—	—	—	—	—	—	—	—	—	—
2250	—	—	—	—	—	—	—	—	—	—
2375	—	—	—	—	—	—	—	—	—	—
2500	—	—	—	—	—	—	—	—	—	—

Medium Static 1478-2390 RPM

NOTE: Fan tables include highest gas heat. Utilize static pressure deduction tables for lower gas heat capacities.

48FCFA06 THREE PHASE — 5 TON VERTICAL SUPPLY (RPM - BHP)

CFM	AVAILABLE EXTERNAL STATIC PRESSURE (in. wg)									
	0.2		0.4		0.6		0.8		1.0	
	RPM	BHP	RPM	BHP	RPM	BHP	RPM	BHP	RPM	BHP
1500	1478	0.34	1650	0.48	1798	0.62	1932	0.76	2055	0.92
1625	1571	0.41	1735	0.55	1879	0.70	2009	0.86	2129	1.02
1750	1665	0.49	1822	0.64	1962	0.80	2088	0.96	2205	1.13
1875	1762	0.58	1911	0.74	2046	0.91	2169	1.08	2283	1.26
2000	1859	0.68	2001	0.85	2132	1.02	2252	1.21	2363	1.39
2125	1957	0.79	2093	0.97	2219	1.15	2335	1.34	2444	1.54
2250	2055	0.92	2185	1.10	2307	1.30	2420	1.50	2527	1.70
2375	2156	1.06	2279	1.25	2397	1.45	2507	1.66	2610	1.88
2500	2256	1.21	2374	1.41	2487	1.62	2594	1.84	2695	2.07

CFM	AVAILABLE EXTERNAL STATIC PRESSURE (in. wg)									
	1.2		1.4		1.6		1.8		2.0	
	RPM	BHP	RPM	BHP	RPM	BHP	RPM	BHP	RPM	BHP
1500	2169	1.08	2277	1.25	2379	1.43	2477	1.61	2572	1.80
1625	2240	1.19	2345	1.37	2445	1.55	2541	1.74	2633	1.93
1750	2314	1.31	2417	1.49	2514	1.68	2608	1.88	2698	2.08
1875	2389	1.44	2490	1.63	2586	1.83	2677	2.03	2766	2.24
2000	2467	1.59	2565	1.78	2659	1.99	2749	2.20	2836	2.41
2125	2546	1.74	2643	1.95	2734	2.16	2823	2.38	—	—
2250	2627	1.91	2721	2.13	2812	2.35	—	—	—	—
2375	2708	2.10	2801	2.32	—	—	—	—	—	—
2500	2791	2.30	—	—	—	—	—	—	—	—

Standard Static 1478-2150 RPM, 1.06 Max BHP

Medium Static 1478-2390 RPM, 1.44 Max BHP

High Static 1478-2836 RPM, 2.43 Max BHP

NOTE: Fan tables include highest gas heat. Utilize static pressure deduction tables for lower gas heat capacities.

48FCFA06 THREE PHASE – STANDARD STATIC — 5 TON VERTICAL SUPPLY (RPM - VDC)

CFM	AVAILABLE EXTERNAL STATIC PRESSURE (in. wg)									
	0.2		0.4		0.6		0.8		1.0	
	RPM	Vdc	RPM	Vdc	RPM	Vdc	RPM	Vdc	RPM	Vdc
1500	1478	6.9	1650	7.7	1798	8.4	1932	9.0	2055	9.6
1625	1571	7.3	1735	8.1	1879	8.7	2009	9.3	2129	9.9
1750	1665	7.7	1822	8.5	1962	9.1	2088	9.7		
1875	1762	8.2	1911	8.9	2046	9.5	—	—	—	—
2000	1859	8.6	2001	9.3	2132	9.9	—	—	—	—
2125	1957	9.1	2093	9.7	—	—	—	—	—	—
2250	2055	9.6	—	—	—	—	—	—	—	—
2375	—	—	—	—	—	—	—	—	—	—
2500	—	—	—	—	—	—	—	—	—	—

CFM	AVAILABLE EXTERNAL STATIC PRESSURE (in. wg)									
	1.2		1.4		1.6		1.8		2.0	
	RPM	Vdc	RPM	Vdc	RPM	Vdc	RPM	Vdc	RPM	Vdc
1500	—	—	—	—	—	—	—	—	—	—
1625	—	—	—	—	—	—	—	—	—	—
1750	—	—	—	—	—	—	—	—	—	—
1875	—	—	—	—	—	—	—	—	—	—
2000	—	—	—	—	—	—	—	—	—	—
2125	—	—	—	—	—	—	—	—	—	—
2250	—	—	—	—	—	—	—	—	—	—
2375	—	—	—	—	—	—	—	—	—	—
2500	—	—	—	—	—	—	—	—	—	—

Standard Static 1478-2150 RPM

NOTE: Fan tables include highest gas heat. Utilize static pressure deduction tables for lower gas heat capacities.

48FCFA06 THREE PHASE – MEDIUM STATIC — 5 TON VERTICAL SUPPLY (RPM - VDC)

CFM	AVAILABLE EXTERNAL STATIC PRESSURE (in. wg)									
	0.2		0.4		0.6		0.8		1.0	
	RPM	Vdc	RPM	Vdc	RPM	Vdc	RPM	Vdc	RPM	Vdc
1500	1478	6.2	1650	6.9	1798	7.5	1932	8.1	2055	8.6
1625	1571	6.6	1735	7.3	1879	7.9	2009	8.4	2129	8.9
1750	1665	7.0	1822	7.6	1962	8.2	2088	8.7	2205	9.2
1875	1762	7.4	1911	8.0	2046	8.6	2169	9.1	2283	9.6
2000	1859	7.8	2001	8.4	2132	8.9	2252	9.4	2363	9.9
2125	1957	8.2	2093	8.8	2219	9.3	2335	9.8	—	—
2250	2055	8.6	2185	9.1	2307	9.7	—	—	—	—
2375	2156	9.0	2279	9.5	—	—	—	—	—	—
2500	2256	9.4	2374	9.9	—	—	—	—	—	—

CFM	AVAILABLE EXTERNAL STATIC PRESSURE (in. wg)									
	1.2		1.4		1.6		1.8		2.0	
	RPM	Vdc	RPM	Vdc	RPM	Vdc	RPM	Vdc	RPM	Vdc
1500	2169	9.1	2277	9.5	2379	10.0	—	—	—	—
1625	2240	9.4	2345	9.8	—	—	—	—	—	—
1750	2314	9.7	—	—	—	—	—	—	—	—
1875	2389	10.0	—	—	—	—	—	—	—	—
2000	—	—	—	—	—	—	—	—	—	—
2125	—	—	—	—	—	—	—	—	—	—
2250	—	—	—	—	—	—	—	—	—	—
2375	—	—	—	—	—	—	—	—	—	—
2500	—	—	—	—	—	—	—	—	—	—

Medium Static 1478-2390 RPM

NOTE: Fan tables include highest gas heat. Utilize static pressure deduction tables for lower gas heat capacities.

48FCFA06 THREE PHASE – HIGH STATIC — 5 TON VERTICAL SUPPLY (RPM - VDC)

CFM	AVAILABLE EXTERNAL STATIC PRESSURE (in. wg)									
	0.2		0.4		0.6		0.8		1.0	
	RPM	Vdc	RPM	Vdc	RPM	Vdc	RPM	Vdc	RPM	Vdc
1500	1478	5.2	1650	5.8	1798	6.3	1932	6.8	2055	7.2
1625	1571	5.5	1735	6.1	1879	6.6	2009	7.1	2129	7.5
1750	1665	5.9	1822	6.4	1962	6.9	2088	7.4	2205	7.8
1875	1762	6.2	1911	6.7	2046	7.2	2169	7.6	2283	8.1
2000	1859	6.6	2001	7.1	2132	7.5	2252	7.9	2363	8.3
2125	1957	6.9	2093	7.4	2219	7.8	2335	8.2	2444	8.6
2250	2055	7.2	2185	7.7	2307	8.1	2420	8.5	2527	8.9
2375	2156	7.6	2279	8.0	2397	8.5	2507	8.8	2610	9.2
2500	2256	8.0	2374	8.4	2487	8.8	2594	9.1	2695	9.5

CFM	AVAILABLE EXTERNAL STATIC PRESSURE (in. wg)									
	1.2		1.4		1.6		1.8		2.0	
	RPM	Vdc	RPM	Vdc	RPM	Vdc	RPM	Vdc	RPM	Vdc
1500	2169	7.6	2277	8.0	2379	8.4	2477	8.7	2572	9.1
1625	2240	7.9	2345	8.3	2445	8.6	2541	9.0	2633	9.3
1750	2314	8.2	2417	8.5	2514	8.9	2608	9.2	2698	9.5
1875	2389	8.4	2490	8.8	2586	9.1	2677	9.4	2766	9.8
2000	2467	8.7	2565	9.0	2659	9.4	2749	9.7	2836	10.0
2125	2546	9.0	2643	9.3	2734	9.6	2823	10.0	—	—
2250	2627	9.3	2721	9.6	2812	9.9	—	—	—	—
2375	2708	9.5	2801	9.9	—	—	—	—	—	—
2500	2791	9.8	—	—	—	—	—	—	—	—

High Static 1478-2836 RPM

NOTE: Fan tables include highest gas heat. Utilize static pressure deduction tables for lower gas heat capacities.

48FCFM07 THREE PHASE — 6 TON VERTICAL SUPPLY (RPM - BHP)

CFM	AVAILABLE EXTERNAL STATIC PRESSURE (in. wg)									
	0.2		0.4		0.6		0.8		1.0	
	RPM	BHP	RPM	BHP	RPM	BHP	RPM	BHP	RPM	BHP
1800	1596	0.43	1749	0.56	1889	0.71	2015	0.86	2131	1.02
1950	1704	0.52	1847	0.67	1981	0.82	2104	0.98	2217	1.15
2100	1814	0.63	1948	0.78	2075	0.94	2194	1.12	2305	1.29
2250	1924	0.75	2050	0.91	2172	1.08	2286	1.26	2394	1.45
2400	2037	0.89	2155	1.06	2270	1.24	2381	1.43	2485	1.62
2550	2150	1.05	2261	1.22	2370	1.41	2476	1.61	2578	1.81
2700	2265	1.23	2368	1.40	2472	1.60	2574	1.80	2672	2.02
2850	2379	1.43	2477	1.61	2576	1.81	2674	2.02	2768	2.24
3000	2495	1.64	2587	1.83	2681	2.04	2775	2.26	—	—

CFM	AVAILABLE EXTERNAL STATIC PRESSURE (in. wg)									
	1.2		1.4		1.6		1.8		2.0	
	RPM	BHP	RPM	BHP	RPM	BHP	RPM	BHP	RPM	BHP
1800	2239	1.19	2340	1.35	2436	1.53	2528	1.71	2615	1.89
1950	2323	1.32	2422	1.50	2516	1.68	2605	1.87	2691	2.06
2100	2408	1.47	2505	1.66	2597	1.85	2685	2.04	2770	2.25
2250	2495	1.64	2590	1.84	2681	2.04	2767	2.24	—	—
2400	2584	1.82	2677	2.03	2766	2.24	—	—	—	—
2550	2674	2.02	2766	2.24	—	—	—	—	—	—
2700	2766	2.24	—	—	—	—	—	—	—	—
2850	—	—	—	—	—	—	—	—	—	—
3000	—	—	—	—	—	—	—	—	—	—

Standard Static 1596-2300 RPM, 1.31 Max BHP

Medium Static 1596-2530 RPM, 1.76 Max BHP

High Static 1596-2836 RPM, 2.43 Max BHP

NOTE: Fan tables include highest gas heat. Utilize static pressure deduction tables for lower gas heat capacities.

48FCFM07 THREE PHASE – STANDARD STATIC — 6 TON VERTICAL SUPPLY (RPM - VDC)

CFM	AVAILABLE EXTERNAL STATIC PRESSURE (in. wg)									
	0.2		0.4		0.6		0.8		1.0	
	RPM	Vdc	RPM	Vdc	RPM	Vdc	RPM	Vdc	RPM	Vdc
1800	1596	6.9	1749	7.6	1889	8.2	2015	8.8	2131	9.3
1950	1704	7.4	1847	8.0	1981	8.6	2104	9.1	2217	9.6
2100	1814	7.9	1948	8.5	2075	9.0	2194	9.5	—	—
2250	1925	8.4	2050	8.9	2172	9.4	2286	9.9	—	—
2400	2037	8.9	2154	9.4	2270	9.9	—	—	—	—
2550	2150	9.3	2261	9.8	—	—	—	—	—	—
2700	2265	9.8	—	—	—	—	—	—	—	—
2850	—	—	—	—	—	—	—	—	—	—
3000	—	—	—	—	—	—	—	—	—	—

CFM	AVAILABLE EXTERNAL STATIC PRESSURE (in. wg)									
	1.2		1.4		1.6		1.8		2.0	
	RPM	Vdc	RPM	Vdc	RPM	Vdc	RPM	Vdc	RPM	Vdc
1800	2239	9.7	—	—	—	—	—	—	—	—
1950	—	—	—	—	—	—	—	—	—	—
2100	—	—	—	—	—	—	—	—	—	—
2250	—	—	—	—	—	—	—	—	—	—
2400	—	—	—	—	—	—	—	—	—	—
2550	—	—	—	—	—	—	—	—	—	—
2700	—	—	—	—	—	—	—	—	—	—
2850	—	—	—	—	—	—	—	—	—	—
3000	—	—	—	—	—	—	—	—	—	—

Standard Static 1596-2300 RPM

NOTE: Fan tables include highest gas heat. Utilize static pressure deduction tables for lower gas heat capacities.

48FCFM07 THREE PHASE – MEDIUM STATIC — 6 TON VERTICAL SUPPLY (RPM - VDC)

CFM	AVAILABLE EXTERNAL STATIC PRESSURE (in. wg)									
	0.2		0.4		0.6		0.8		1.0	
	RPM	Vdc	RPM	Vdc	RPM	Vdc	RPM	Vdc	RPM	Vdc
1800	1596	6.3	1749	6.9	1889	7.5	2015	8.0	2131	8.4
1950	1704	6.7	1847	7.3	1981	7.8	2104	8.3	2217	8.8
2100	1814	7.2	1948	7.7	2075	8.2	2194	8.7	2305	9.1
2250	1925	7.6	2050	8.1	2172	8.6	2286	9.0	2394	9.5
2400	2037	8.1	2154	8.5	2270	9.0	2381	9.4	2485	9.8
2550	2150	8.5	2261	8.9	2370	9.4	2477	9.8	—	—
2700	2265	9.0	2368	9.4	2472	9.8	—	—	—	—
2850	2379	9.4	2477	9.8	—	—	—	—	—	—
3000	2495	9.9	—	—	—	—	—	—	—	—

CFM	AVAILABLE EXTERNAL STATIC PRESSURE (in. wg)									
	1.2		1.4		1.6		1.8		2.0	
	RPM	Vdc	RPM	Vdc	RPM	Vdc	RPM	Vdc	RPM	Vdc
1800	2239	8.8	2340	9.2	2436	9.6	2527	10.0	—	—
1950	2323	9.2	2422	9.6	2516	9.9	—	—	—	—
2100	2408	9.5	2505	9.9	—	—	—	—	—	—
2250	2495	9.9	—	—	—	—	—	—	—	—
2400	—	—	—	—	—	—	—	—	—	—
2550	—	—	—	—	—	—	—	—	—	—
2700	—	—	—	—	—	—	—	—	—	—
2850	—	—	—	—	—	—	—	—	—	—
3000	—	—	—	—	—	—	—	—	—	—

Medium Static 1596-2530 RPM

NOTE: Fan tables include highest gas heat. Utilize static pressure deduction tables for lower gas heat capacities.

48FCFM07 THREE PHASE – HIGH STATIC — 6 TON VERTICAL SUPPLY (RPM - VDC)

CFM	AVAILABLE EXTERNAL STATIC PRESSURE (in. wg)									
	0.2		0.4		0.6		0.8		1.0	
	RPM	Vdc	RPM	Vdc	RPM	Vdc	RPM	Vdc	RPM	Vdc
1800	1596	5.6	1749	6.2	1889	6.7	2015	7.1	2131	7.5
1950	1704	6.0	1847	6.5	1981	7.0	2104	7.4	2217	7.8
2100	1814	6.4	1948	6.9	2075	7.3	2194	7.7	2305	8.1
2250	1925	6.8	2050	7.2	2172	7.7	2286	8.1	2394	8.4
2400	2037	7.2	2154	7.6	2270	8.0	2381	8.4	2485	8.8
2550	2150	7.6	2261	8.0	2370	8.4	2477	8.7	2578	9.1
2700	2265	8.0	2368	8.3	2472	8.7	2574	9.1	2672	9.4
2850	2379	8.4	2477	8.7	2576	9.1	2674	9.4	2768	9.8
3000	2495	8.8	2587	9.1	2681	9.5	2775	9.8	—	—

CFM	AVAILABLE EXTERNAL STATIC PRESSURE (in. wg)									
	1.2		1.4		1.6		1.8		2.0	
	RPM	Vdc	RPM	Vdc	RPM	Vdc	RPM	Vdc	RPM	Vdc
1800	2239	7.9	2340	8.3	2436	8.6	2527	8.9	2615	9.2
1950	2323	8.2	2422	8.5	2516	8.9	2605	9.2	2691	9.5
2100	2408	8.5	2505	8.8	2597	9.2	2685	9.5	2770	9.8
2250	2495	8.8	2590	9.1	2681	9.5	2767	9.8	—	—
2400	2584	9.1	2677	9.4	2766	9.8	—	—	—	—
2550	2674	9.4	2766	9.8	—	—	—	—	—	—
2700	2766	9.8	—	—	—	—	—	—	—	—
2850	—	—	—	—	—	—	—	—	—	—
3000	—	—	—	—	—	—	—	—	—	—

High Static 1596-2836 RPM

NOTE: Fan tables include highest gas heat. Utilize static pressure deduction tables for lower gas heat capacities.

48FCEA04 SINGLE PHASE — 3 TON HORIZONTAL SUPPLY (RPM - BHP)

CFM	AVAILABLE EXTERNAL STATIC PRESSURE (in. wg)									
	0.2		0.4		0.6		0.8		1.0	
	RPM	BHP	RPM	BHP	RPM	BHP	RPM	BHP	RPM	BHP
900	1079	0.09	1315	0.16	1510	0.24	1679	0.33	1830	0.43
975	1126	0.10	1355	0.17	1546	0.26	1713	0.35	1863	0.45
1050	1175	0.11	1396	0.19	1584	0.28	1749	0.37	1897	0.48
1125	1226	0.13	1438	0.21	1622	0.30	1785	0.40	1932	0.50
1200	1278	0.15	1482	0.23	1662	0.32	1822	0.42	1968	0.53
1275	1331	0.16	1528	0.25	1703	0.34	1861	0.45	2004	0.56
1350	1386	0.19	1575	0.27	1746	0.37	1900	0.48	2042	0.59
1425	1441	0.21	1623	0.30	1789	0.40	1941	0.51	2080	0.63
1500	1498	0.23	1672	0.33	1834	0.43	1982	0.54	2119	0.66

CFM	AVAILABLE EXTERNAL STATIC PRESSURE (in. wg)									
	1.2		1.4		1.6		1.8		2.0	
	RPM	BHP	RPM	BHP	RPM	BHP	RPM	BHP	RPM	BHP
900	1968	0.53	2096	0.64	2215	0.76	2328	0.88	2434	1.00
975	2000	0.56	2127	0.67	2246	0.79	2358	0.91	2464	1.04
1050	2033	0.59	2159	0.70	2277	0.82	2389	0.95	—	—
1125	2067	0.61	2192	0.73	2309	0.86	2420	0.99	—	—
1200	2101	0.65	2225	0.77	2342	0.89	2452	1.03	—	—
1275	2136	0.68	2260	0.80	2376	0.93	2485	1.07	—	—
1350	2172	0.71	2295	0.84	2410	0.97	—	—	—	—
1425	2209	0.75	2330	0.88	2445	1.02	—	—	—	—
1500	2247	0.79	2367	0.92	2480	1.06	—	—	—	—

Standard Static 1079-1890 RPM, 0.44 Max BHP

Medium Static 1079-2190 RPM, 0.71 Max BHP

High Static 1079-2490 RPM, 1.07 Max BHP

NOTE: Fan tables include highest gas heat. Utilize static pressure deduction tables for lower gas heat capacities.

48FCEA04 SINGLE PHASE – STANDARD STATIC — 3 TON HORIZONTAL SUPPLY (RPM - VDC)

CFM	AVAILABLE EXTERNAL STATIC PRESSURE (in. wg)									
	0.2		0.4		0.6		0.8		1.0	
	RPM	Vdc	RPM	Vdc	RPM	Vdc	RPM	Vdc	RPM	Vdc
900	1079	5.7	1315	7.0	1510	8.0	1679	8.9	1830	9.7
975	1126	6.0	1355	7.2	1546	8.2	1713	9.1	—	—
1050	1175	6.2	1396	7.4	1584	8.4	1749	9.3	—	—
1125	1226	6.5	1438	7.6	1622	8.6	1785	9.4	—	—
1200	1278	6.8	1482	7.8	1662	8.8	1822	9.6	—	—
1275	1331	7.0	1528	8.1	1703	9.0	—	—	—	—
1350	1386	7.3	1575	8.3	1746	9.2	—	—	—	—
1425	1441	7.6	1623	8.6	1789	9.5	—	—	—	—
1500	1498	7.9	1672	8.8	1834	9.7	—	—	—	—

CFM	AVAILABLE EXTERNAL STATIC PRESSURE (in. wg)									
	1.2		1.4		1.6		1.8		2.0	
	RPM	Vdc	RPM	Vdc	RPM	Vdc	RPM	Vdc	RPM	Vdc
900	—	—	—	—	—	—	—	—	—	—
975	—	—	—	—	—	—	—	—	—	—
1050	—	—	—	—	—	—	—	—	—	—
1125	—	—	—	—	—	—	—	—	—	—
1200	—	—	—	—	—	—	—	—	—	—
1275	—	—	—	—	—	—	—	—	—	—
1350	—	—	—	—	—	—	—	—	—	—
1425	—	—	—	—	—	—	—	—	—	—
1500	—	—	—	—	—	—	—	—	—	—

Standard Static 1079-1890 RPM

NOTE: Fan tables include highest gas heat. Utilize static pressure deduction tables for lower gas heat capacities.

48FCEA04 SINGLE PHASE – MEDIUM STATIC — 3 TON HORIZONTAL SUPPLY (RPM - VDC)

CFM	AVAILABLE EXTERNAL STATIC PRESSURE (in. wg)									
	0.2		0.4		0.6		0.8		1.0	
	RPM	Vdc	RPM	Vdc	RPM	Vdc	RPM	Vdc	RPM	Vdc
900	1079	4.9	1315	6.0	1510	6.9	1679	7.7	1830	8.4
975	1126	5.1	1355	6.2	1546	7.1	1713	7.8	1863	8.5
1050	1175	5.4	1396	6.4	1584	7.2	1749	8.0	1897	8.7
1125	1226	5.6	1438	6.6	1622	7.4	1785	8.2	1932	8.8
1200	1278	5.8	1482	6.8	1662	7.6	1822	8.3	1968	9.0
1275	1331	6.1	1528	7.0	1703	7.8	1861	8.5	2004	9.2
1350	1386	6.3	1575	7.2	1746	8.0	1900	8.7	2042	9.3
1425	1441	6.6	1623	7.4	1789	8.2	1941	8.9	2080	9.5
1500	1498	6.8	1672	7.6	1834	8.4	1982	9.1	2119	9.7

CFM	AVAILABLE EXTERNAL STATIC PRESSURE (in. wg)									
	1.2		1.4		1.6		1.8		2.0	
	RPM	Vdc	RPM	Vdc	RPM	Vdc	RPM	Vdc	RPM	Vdc
900	1968	9.0	2096	9.6	—	—	—	—	—	—
975	2000	9.1	2127	9.7	—	—	—	—	—	—
1050	2033	9.3	2159	9.9	—	—	—	—	—	—
1125	2067	9.4	—	—	—	—	—	—	—	—
1200	2101	9.6	—	—	—	—	—	—	—	—
1275	2136	9.8	—	—	—	—	—	—	—	—
1350	2172	9.9	—	—	—	—	—	—	—	—
1425	—	—	—	—	—	—	—	—	—	—
1500	—	—	—	—	—	—	—	—	—	—

Medium Static 1079-2190 RPM

NOTE: Fan tables include highest gas heat. Utilize static pressure deduction tables for lower gas heat capacities.

48FCEA04 SINGLE PHASE – HIGH STATIC — 3 TON HORIZONTAL SUPPLY (RPM - VDC)

CFM	AVAILABLE EXTERNAL STATIC PRESSURE (in. wg)									
	0.2		0.4		0.6		0.8		1.0	
	RPM	Vdc	RPM	Vdc	RPM	Vdc	RPM	Vdc	RPM	Vdc
900	1079	4.3	1315	5.3	1510	6.1	1679	6.7	1830	7.3
975	1126	4.5	1355	5.4	1546	6.2	1713	6.9	1863	7.5
1050	1175	4.7	1396	5.6	1584	6.4	1749	7.0	1897	7.6
1125	1226	4.9	1438	5.8	1622	6.5	1785	7.2	1932	7.8
1200	1278	5.1	1482	6.0	1662	6.7	1822	7.3	1968	7.9
1275	1331	5.3	1528	6.1	1703	6.8	1861	7.5	2004	8.0
1350	1386	5.6	1575	6.3	1746	7.0	1900	7.6	2042	8.2
1425	1441	5.8	1623	6.5	1789	7.2	1941	7.8	2080	8.4
1500	1498	6.0	1672	6.7	1834	7.4	1982	8.0	2119	8.5

CFM	AVAILABLE EXTERNAL STATIC PRESSURE (in. wg)									
	1.2		1.4		1.6		1.8		2.0	
	RPM	Vdc	RPM	Vdc	RPM	Vdc	RPM	Vdc	RPM	Vdc
900	1968	7.9	2096	8.4	2215	8.9	2328	9.3	2434	9.8
975	2000	8.0	2127	8.5	2246	9.0	2358	9.5	2464	9.9
1050	2033	8.2	2159	8.7	2277	9.1	2389	9.6	—	—
1125	2067	8.3	2192	8.8	2309	9.3	2420	9.7	—	—
1200	2101	8.4	2225	8.9	2342	9.4	2452	9.8	—	—
1275	2136	8.6	2260	9.1	2376	9.5	2485	10.0	—	—
1350	2172	8.7	2295	9.2	2410	9.7	—	—	—	—
1425	2209	8.9	2330	9.4	2445	9.8	—	—	—	—
1500	2247	9.0	2367	9.5	2480	10.0	—	—	—	—

High Static 1079-2490 RPM

NOTE: Fan tables include highest gas heat. Utilize static pressure deduction tables for lower gas heat capacities.

48FCEA04 THREE PHASE — 3 TON HORIZONTAL SUPPLY (RPM - BHP)

CFM	AVAILABLE EXTERNAL STATIC PRESSURE (in. wg)									
	0.2		0.4		0.6		0.8		1.0	
	RPM	BHP	RPM	BHP	RPM	BHP	RPM	BHP	RPM	BHP
900	1079	0.09	1315	0.16	1510	0.24	1679	0.33	1830	0.43
975	1126	0.10	1355	0.17	1546	0.26	1713	0.35	1863	0.45
1050	1175	0.11	1396	0.19	1584	0.28	1749	0.37	1897	0.48
1125	1226	0.13	1438	0.21	1622	0.30	1785	0.40	1932	0.50
1200	1278	0.15	1482	0.23	1662	0.32	1822	0.42	1968	0.53
1275	1331	0.16	1528	0.25	1703	0.34	1861	0.45	2004	0.56
1350	1386	0.19	1575	0.27	1746	0.37	1900	0.48	2042	0.59
1425	1441	0.21	1623	0.30	1789	0.40	1941	0.51	2080	0.63
1500	1498	0.23	1672	0.33	1834	0.43	1982	0.54	2119	0.66

CFM	AVAILABLE EXTERNAL STATIC PRESSURE (in. wg)									
	1.2		1.4		1.6		1.8		2.0	
	RPM	BHP	RPM	BHP	RPM	BHP	RPM	BHP	RPM	BHP
900	1968	0.53	2096	0.64	2215	0.76	2328	0.88	2434	1.00
975	2000	0.56	2127	0.67	2246	0.79	2358	0.91	2464	1.04
1050	2033	0.59	2159	0.70	2277	0.82	2389	0.95	—	—
1125	2067	0.61	2192	0.73	2309	0.86	2420	0.99	—	—
1200	2101	0.65	2225	0.77	2342	0.89	2452	1.03	—	—
1275	2136	0.68	2260	0.80	2376	0.93	2485	1.07	—	—
1350	2172	0.71	2295	0.84	2410	0.97	—	—	—	—
1425	2209	0.75	2330	0.88	2445	1.02	—	—	—	—
1500	2247	0.79	2367	0.92	2480	1.06	—	—	—	—

Standard Static 1079-1890 RPM, 0.44 Max BHP

Medium Static 1079-2190 RPM, 0.71 Max BHP

High Static 1079-2490 RPM, 1.07 Max BHP

NOTE: Fan tables include highest gas heat. Utilize static pressure deduction tables for lower gas heat capacities.

48FCEA04 THREE PHASE – STANDARD STATIC — 3 TON HORIZONTAL SUPPLY (RPM - VDC)

CFM	AVAILABLE EXTERNAL STATIC PRESSURE (in. wg)									
	0.2		0.4		0.6		0.8		1.0	
	RPM	Vdc	RPM	Vdc	RPM	Vdc	RPM	Vdc	RPM	Vdc
900	1079	5.7	1315	7.0	1510	8.0	1679	8.9	1830	9.7
975	1126	6.0	1355	7.2	1546	8.2	1713	9.1	—	—
1050	1175	6.2	1396	7.4	1584	8.4	1749	9.3	—	—
1125	1226	6.5	1438	7.6	1622	8.6	1785	9.4	—	—
1200	1278	6.8	1482	7.8	1662	8.8	1822	9.6	—	—
1275	1331	7.0	1528	8.1	1703	9.0	—	—	—	—
1350	1386	7.3	1575	8.3	1746	9.2	—	—	—	—
1425	1441	7.6	1623	8.6	1789	9.5	—	—	—	—
1500	1498	7.9	1672	8.8	1834	9.7	—	—	—	—

CFM	AVAILABLE EXTERNAL STATIC PRESSURE (in. wg)									
	1.2		1.4		1.6		1.8		2.0	
	RPM	Vdc	RPM	Vdc	RPM	Vdc	RPM	Vdc	RPM	Vdc
900	—	—	—	—	—	—	—	—	—	—
975	—	—	—	—	—	—	—	—	—	—
1050	—	—	—	—	—	—	—	—	—	—
1125	—	—	—	—	—	—	—	—	—	—
1200	—	—	—	—	—	—	—	—	—	—
1275	—	—	—	—	—	—	—	—	—	—
1350	—	—	—	—	—	—	—	—	—	—
1425	—	—	—	—	—	—	—	—	—	—
1500	—	—	—	—	—	—	—	—	—	—

Standard Static 1079-1890 RPM

NOTE: Fan tables include highest gas heat. Utilize static pressure deduction tables for lower gas heat capacities.

48FCEA04 THREE PHASE – MEDIUM STATIC — 3 TON HORIZONTAL SUPPLY (RPM - VDC)

CFM	AVAILABLE EXTERNAL STATIC PRESSURE (in. wg)									
	0.2		0.4		0.6		0.8		1.0	
	RPM	Vdc	RPM	Vdc	RPM	Vdc	RPM	Vdc	RPM	Vdc
900	1079	4.9	1315	6.0	1510	6.9	1679	7.7	1830	8.4
975	1126	5.1	1355	6.2	1546	7.1	1713	7.8	1863	8.5
1050	1175	5.4	1396	6.4	1584	7.2	1749	8.0	1897	8.7
1125	1226	5.6	1438	6.6	1622	7.4	1785	8.2	1932	8.8
1200	1278	5.8	1482	6.8	1662	7.6	1822	8.3	1968	9.0
1275	1331	6.1	1528	7.0	1703	7.8	1861	8.5	2004	9.2
1350	1386	6.3	1575	7.2	1746	8.0	1900	8.7	2042	9.3
1425	1441	6.6	1623	7.4	1789	8.2	1941	8.9	2080	9.5
1500	1498	6.8	1672	7.6	1834	8.4	1982	9.1	2119	9.7

CFM	AVAILABLE EXTERNAL STATIC PRESSURE (in. wg)									
	1.2		1.4		1.6		1.8		2.0	
	RPM	Vdc	RPM	Vdc	RPM	Vdc	RPM	Vdc	RPM	Vdc
900	1968	9.0	2096	9.6	—	—	—	—	—	—
975	2000	9.1	2127	9.7	—	—	—	—	—	—
1050	2033	9.3	2159	9.9	—	—	—	—	—	—
1125	2067	9.4	—	—	—	—	—	—	—	—
1200	2101	9.6	—	—	—	—	—	—	—	—
1275	2136	9.8	—	—	—	—	—	—	—	—
1350	2172	9.9	—	—	—	—	—	—	—	—
1425	—	—	—	—	—	—	—	—	—	—
1500	—	—	—	—	—	—	—	—	—	—

Medium Static 1079-2190 RPM

NOTE: Fan tables include highest gas heat. Utilize static pressure deduction tables for lower gas heat capacities.

48FCEA04 THREE PHASE – HIGH STATIC — 3 TON HORIZONTAL SUPPLY (RPM - VDC)

CFM	AVAILABLE EXTERNAL STATIC PRESSURE (in. wg)									
	0.2		0.4		0.6		0.8		1.0	
	RPM	Vdc	RPM	Vdc	RPM	Vdc	RPM	Vdc	RPM	Vdc
900	1079	4.3	1315	5.3	1510	6.1	1679	6.7	1830	7.3
975	1126	4.5	1355	5.4	1546	6.2	1713	6.9	1863	7.5
1050	1175	4.7	1396	5.6	1584	6.4	1749	7.0	1897	7.6
1125	1226	4.9	1438	5.8	1622	6.5	1785	7.2	1932	7.8
1200	1278	5.1	1482	6.0	1662	6.7	1822	7.3	1968	7.9
1275	1331	5.3	1528	6.1	1703	6.8	1861	7.5	2004	8.0
1350	1386	5.6	1575	6.3	1746	7.0	1900	7.6	2042	8.2
1425	1441	5.8	1623	6.5	1789	7.2	1941	7.8	2080	8.4
1500	1498	6.0	1672	6.7	1834	7.4	1982	8.0	2119	8.5

CFM	AVAILABLE EXTERNAL STATIC PRESSURE (in. wg)									
	1.2		1.4		1.6		1.8		2.0	
	RPM	Vdc	RPM	Vdc	RPM	Vdc	RPM	Vdc	RPM	Vdc
900	1968	7.9	2096	8.4	2215	8.9	2328	9.3	2434	9.8
975	2000	8.0	2127	8.5	2246	9.0	2358	9.5	2464	9.9
1050	2033	8.2	2159	8.7	2277	9.1	2389	9.6	—	—
1125	2067	8.3	2192	8.8	2309	9.3	2420	9.7	—	—
1200	2101	8.4	2225	8.9	2342	9.4	2452	9.8	—	—
1275	2136	8.6	2260	9.1	2376	9.5	2485	10.0	—	—
1350	2172	8.7	2295	9.2	2410	9.7	—	—	—	—
1425	2209	8.9	2330	9.4	2445	9.8	—	—	—	—
1500	2247	9.0	2367	9.5	2480	10.0	—	—	—	—

High Static 1079-2490 RPM

NOTE: Fan tables include highest gas heat. Utilize static pressure deduction tables for lower gas heat capacities.

48FCFA05 SINGLE PHASE — 4 TON HORIZONTAL SUPPLY (RPM - BHP)

CFM	AVAILABLE EXTERNAL STATIC PRESSURE (in. wg)									
	0.2		0.4		0.6		0.8		1.0	
	RPM	BHP	RPM	BHP	RPM	BHP	RPM	BHP	RPM	BHP
1200	1217	0.19	1411	0.30	1576	0.42	1722	0.55	1855	0.68
1300	1283	0.23	1470	0.34	1631	0.46	1774	0.60	1904	0.74
1400	1351	0.26	1531	0.38	1688	0.51	1827	0.65	1955	0.80
1500	1420	0.31	1593	0.43	1746	0.57	1883	0.71	2008	0.86
1600	1491	0.35	1657	0.48	1805	0.63	1939	0.78	2062	0.93
1700	1563	0.41	1722	0.54	1866	0.69	1997	0.85	2118	1.01
1800	1635	0.46	1789	0.61	1928	0.76	2056	0.92	2174	1.09
1900	1709	0.53	1856	0.68	1991	0.84	2116	1.01	2232	1.18
2000	1784	0.60	1925	0.76	2056	0.92	2178	1.10	2291	1.28

CFM	AVAILABLE EXTERNAL STATIC PRESSURE (in. wg)									
	1.2		1.4		1.6		1.8		2.0	
	RPM	BHP	RPM	BHP	RPM	BHP	RPM	BHP	RPM	BHP
1200	1979	0.83	2094	0.98	2204	1.15	2308	1.32	2409	1.50
1300	2025	0.89	2138	1.05	2246	1.21	2349	1.39	2447	1.57
1400	2074	0.95	2185	1.11	2291	1.28	2391	1.46	—	—
1500	2124	1.02	2234	1.19	2338	1.36	2436	1.54	—	—
1600	2176	1.10	2284	1.27	2386	1.45	—	—	—	—
1700	2230	1.18	2336	1.36	2436	1.54	—	—	—	—
1800	2285	1.27	2389	1.45	—	—	—	—	—	—
1900	2341	1.36	2444	1.55	—	—	—	—	—	—
2000	2398	1.46	—	—	—	—	—	—	—	—

Standard Static 1217-1990 RPM, 0.72 Max BHP

Medium Static 1217-2170 RPM, 1.06 Max BHP

High Static 1217-2460 RPM, 1.53 Max BHP

NOTE: Fan tables include highest gas heat. Utilize static pressure deduction tables for lower gas heat capacities.

48FCFA05 SINGLE PHASE – STANDARD STATIC — 4 TON HORIZONTAL SUPPLY (RPM - VDC)

CFM	AVAILABLE EXTERNAL STATIC PRESSURE (in. wg)									
	0.2		0.4		0.6		0.8		1.0	
	RPM	Vdc	RPM	Vdc	RPM	Vdc	RPM	Vdc	RPM	Vdc
1200	1217	6.4	1411	7.4	1576	8.3	1722	9.1	1855	9.8
1300	1283	6.8	1470	7.7	1631	8.6	1774	9.3	—	—
1400	1351	7.1	1531	8.1	1688	8.9	1827	9.6	—	—
1500	1420	7.5	1593	8.4	1746	9.2	1883	9.9	—	—
1600	1491	7.8	1657	8.7	1805	9.5	—	—	—	—
1700	1563	8.2	1722	9.1	1866	9.8	—	—	—	—
1800	1635	8.6	1789	9.4	—	—	—	—	—	—
1900	1709	9.0	1856	9.8	—	—	—	—	—	—
2000	1784	9.4	—	—	—	—	—	—	—	—

CFM	AVAILABLE EXTERNAL STATIC PRESSURE (in. wg)									
	1.2		1.4		1.6		1.8		2.0	
	RPM	Vdc	RPM	Vdc	RPM	Vdc	RPM	Vdc	RPM	Vdc
1200	—	—	—	—	—	—	—	—	—	—
1300	—	—	—	—	—	—	—	—	—	—
1400	—	—	—	—	—	—	—	—	—	—
1500	—	—	—	—	—	—	—	—	—	—
1600	—	—	—	—	—	—	—	—	—	—
1700	—	—	—	—	—	—	—	—	—	—
1800	—	—	—	—	—	—	—	—	—	—
1900	—	—	—	—	—	—	—	—	—	—
2000	—	—	—	—	—	—	—	—	—	—

Standard Static 1217-1990 RPM

NOTE: Fan tables include highest gas heat. Utilize static pressure deduction tables for lower gas heat capacities.

Fan data (cont)

48FCFA05 SINGLE PHASE – MEDIUM STATIC — 4 TON HORIZONTAL SUPPLY (RPM - VDC)

CFM	AVAILABLE EXTERNAL STATIC PRESSURE (in. wg)									
	0.2		0.4		0.6		0.8		1.0	
	RPM	Vdc	RPM	Vdc	RPM	Vdc	RPM	Vdc	RPM	Vdc
1200	1217	5.6	1411	6.5	1576	7.3	1722	7.9	1855	8.5
1300	1283	5.9	1470	6.8	1631	7.5	1774	8.2	1904	8.8
1400	1351	6.2	1531	7.1	1688	7.8	1827	8.4	1955	9.0
1500	1420	6.5	1593	7.3	1746	8.0	1883	8.7	2008	9.3
1600	1491	6.9	1657	7.6	1805	8.3	1939	8.9	2062	9.5
1700	1563	7.2	1722	7.9	1866	8.6	1997	9.2	2118	9.8
1800	1635	7.5	1789	8.2	1928	8.9	2056	9.5	—	—
1900	1709	7.9	1856	8.6	1991	9.2	2116	9.8	—	—
2000	1784	8.2	1925	8.9	2056	9.5	—	—	—	—

CFM	AVAILABLE EXTERNAL STATIC PRESSURE (in. wg)									
	1.2		1.4		1.6		1.8		2.0	
	RPM	Vdc	RPM	Vdc	RPM	Vdc	RPM	Vdc	RPM	Vdc
1200	1979	9.1	2094	9.6	—	—	—	—	—	—
1300	2025	9.3	2138	9.9	—	—	—	—	—	—
1400	2074	9.6	—	—	—	—	—	—	—	—
1500	2124	9.8	—	—	—	—	—	—	—	—
1600	—	—	—	—	—	—	—	—	—	—
1700	—	—	—	—	—	—	—	—	—	—
1800	—	—	—	—	—	—	—	—	—	—
1900	—	—	—	—	—	—	—	—	—	—
2000	—	—	—	—	—	—	—	—	—	—

Medium Static 1217-2170 RPM

NOTE: Fan tables include highest gas heat. Utilize static pressure deduction tables for lower gas heat capacities.

48FCFA05 SINGLE PHASE – HIGH STATIC — 4 TON HORIZONTAL SUPPLY (RPM - VDC)

CFM	AVAILABLE EXTERNAL STATIC PRESSURE (in. wg)									
	0.2		0.4		0.6		0.8		1.0	
	RPM	Vdc	RPM	Vdc	RPM	Vdc	RPM	Vdc	RPM	Vdc
1200	1217	4.9	1411	5.7	1576	6.4	1722	7.0	1855	7.5
1300	1283	5.2	1470	6.0	1631	6.6	1774	7.2	1904	7.7
1400	1351	5.5	1531	6.2	1688	6.9	1827	7.4	1955	7.9
1500	1420	5.8	1593	6.5	1746	7.1	1883	7.7	2008	8.2
1600	1491	6.1	1657	6.7	1805	7.3	1939	7.9	2062	8.4
1700	1563	6.4	1722	7.0	1866	7.6	1997	8.1	2118	8.6
1800	1635	6.6	1789	7.3	1928	7.8	2056	8.4	2174	8.8
1900	1709	6.9	1856	7.5	1991	8.1	2116	8.6	2232	9.1
2000	1784	7.3	1925	7.8	2056	8.4	2178	8.9	2291	9.3

CFM	AVAILABLE EXTERNAL STATIC PRESSURE (in. wg)									
	1.2		1.4		1.6		1.8		2.0	
	RPM	Vdc	RPM	Vdc	RPM	Vdc	RPM	Vdc	RPM	Vdc
1200	1979	8.0	2094	8.5	2204	9.0	2308	9.4	2409	9.8
1300	2025	8.2	2138	8.7	2246	9.1	2349	9.5	2447	9.9
1400	2074	8.4	2185	8.9	2291	9.3	2391	9.7	—	—
1500	2124	8.6	2234	9.1	2338	9.5	2436	9.9	—	—
1600	2176	8.8	2284	9.3	2386	9.7	—	—	—	—
1700	2230	9.1	2336	9.5	2436	9.9	—	—	—	—
1800	2285	9.3	2389	9.7	—	—	—	—	—	—
1900	2341	9.5	2444	9.9	—	—	—	—	—	—
2000	2398	9.7	—	—	—	—	—	—	—	—

High Static 1217-2460 RPM

NOTE: Fan tables include highest gas heat. Utilize static pressure deduction tables for lower gas heat capacities.

48FCFA05 THREE PHASE — 4 TON HORIZONTAL SUPPLY (RPM - BHP)

CFM	AVAILABLE EXTERNAL STATIC PRESSURE (in. wg)									
	0.2		0.4		0.6		0.8		1.0	
	RPM	BHP	RPM	BHP	RPM	BHP	RPM	BHP	RPM	BHP
1200	1216	0.19	1411	0.30	1576	0.42	1722	0.55	1855	0.68
1300	1282	0.23	1470	0.34	1631	0.46	1773	0.60	1904	0.74
1400	1351	0.26	1531	0.38	1688	0.51	1827	0.65	1955	0.80
1500	1420	0.31	1593	0.43	1746	0.57	1882	0.71	2008	0.86
1600	1491	0.35	1657	0.48	1806	0.63	1940	0.78	2062	0.93
1700	1563	0.41	1722	0.54	1866	0.69	1997	0.85	2118	1.01
1800	1636	0.47	1788	0.61	1928	0.76	2056	0.92	2175	1.09
1900	1710	0.53	1856	0.68	1991	0.84	2116	1.01	2233	1.18
2000	1784	0.60	1924	0.76	2055	0.92	2178	1.10	2292	1.28

CFM	AVAILABLE EXTERNAL STATIC PRESSURE (in. wg)									
	1.2		1.4		1.6		1.8		2.0	
	RPM	BHP	RPM	BHP	RPM	BHP	RPM	BHP	RPM	BHP
1200	1978	0.83	2094	0.98	2204	1.15	2308	1.32	2409	1.50
1300	2025	0.89	2138	1.05	2246	1.21	2349	1.39	2447	1.57
1400	2073	0.95	2185	1.11	2291	1.28	2392	1.46	2488	1.64
1500	2124	1.02	2233	1.19	2337	1.36	2437	1.54	2532	1.73
1600	2176	1.10	2284	1.27	2386	1.45	2483	1.63	2577	1.82
1700	2230	1.18	2336	1.36	2436	1.54	2532	1.73	2624	1.92
1800	2285	1.27	2389	1.45	2488	1.64	2582	1.83	—	—
1900	2341	1.36	2443	1.55	2541	1.74	2634	1.94	—	—
2000	2399	1.46	2499	1.66	2595	1.85	—	—	—	—

Standard Static 1216-1900 RPM, 0.72 Max BHP

Medium Static 1216-2170 RPM, 1.06 Max BHP

High Static 1216-2660 RPM, 1.96 Max BHP

NOTE: Fan tables include highest gas heat. Utilize static pressure deduction tables for lower gas heat capacities.

48FCFA05 THREE PHASE – STANDARD STATIC — 4 TON HORIZONTAL SUPPLY (RPM - VDC)

CFM	AVAILABLE EXTERNAL STATIC PRESSURE (in. wg)									
	0.2		0.4		0.6		0.8		1.0	
	RPM	Vdc	RPM	Vdc	RPM	Vdc	RPM	Vdc	RPM	Vdc
1200	1216	6.4	1411	7.4	1576	8.3	1722	9.1	1855	9.8
1300	1282	6.7	1470	7.7	1631	8.6	1773	9.3	—	—
1400	1351	7.1	1531	8.1	1688	8.9	1827	9.6	—	—
1500	1420	7.5	1593	8.4	1746	9.2	1882	9.9	—	—
1600	1491	7.8	1657	8.7	1806	9.5	—	—	—	—
1700	1563	8.2	1722	9.1	1866	9.8	—	—	—	—
1800	1636	8.6	1788	9.4	—	—	—	—	—	—
1900	1710	9.0	1856	9.8	—	—	—	—	—	—
2000	1784	9.4	—	—	—	—	—	—	—	—

CFM	AVAILABLE EXTERNAL STATIC PRESSURE (in. wg)									
	1.2		1.4		1.6		1.8		2.0	
	RPM	Vdc	RPM	Vdc	RPM	Vdc	RPM	Vdc	RPM	Vdc
1200	—	—	—	—	—	—	—	—	—	—
1300	—	—	—	—	—	—	—	—	—	—
1400	—	—	—	—	—	—	—	—	—	—
1500	—	—	—	—	—	—	—	—	—	—
1600	—	—	—	—	—	—	—	—	—	—
1700	—	—	—	—	—	—	—	—	—	—
1800	—	—	—	—	—	—	—	—	—	—
1900	—	—	—	—	—	—	—	—	—	—
2000	—	—	—	—	—	—	—	—	—	—

Standard Static 1216-1900 RPM

NOTE: Fan tables include highest gas heat. Utilize static pressure deduction tables for lower gas heat capacities.

48FCFA05 THREE PHASE – MEDIUM STATIC — 4 TON HORIZONTAL SUPPLY (RPM - VDC)

CFM	AVAILABLE EXTERNAL STATIC PRESSURE (in. wg)									
	0.2		0.4		0.6		0.8		1.0	
	RPM	Vdc	RPM	Vdc	RPM	Vdc	RPM	Vdc	RPM	Vdc
1200	1216	5.6	1411	6.5	1576	7.3	1722	7.9	1855	8.5
1300	1282	5.9	1470	6.8	1631	7.5	1773	8.2	1904	8.8
1400	1351	6.2	1531	7.1	1688	7.8	1827	8.4	1955	9.0
1500	1420	6.5	1593	7.3	1746	8.0	1882	8.7	2008	9.3
1600	1491	6.9	1657	7.6	1806	8.3	1940	8.9	2062	9.5
1700	1563	7.2	1722	7.9	1866	8.6	1997	9.2	2118	9.8
1800	1636	7.5	1788	8.2	1928	8.9	2056	9.5	—	—
1900	1710	7.9	1856	8.6	1991	9.2	2116	9.8	—	—
2000	1784	8.2	1924	8.9	2055	9.5	—	—	—	—

CFM	AVAILABLE EXTERNAL STATIC PRESSURE (in. wg)									
	1.2		1.4		1.6		1.8		2.0	
	RPM	Vdc	RPM	Vdc	RPM	Vdc	RPM	Vdc	RPM	Vdc
1200	1978	9.1	2094	9.6	—	—	—	—	—	—
1300	2025	9.3	2139	9.9	—	—	—	—	—	—
1400	2073	9.6	—	—	—	—	—	—	—	—
1500	2124	9.8	—	—	—	—	—	—	—	—
1600	—	—	—	—	—	—	—	—	—	—
1700	—	—	—	—	—	—	—	—	—	—
1800	—	—	—	—	—	—	—	—	—	—
1900	—	—	—	—	—	—	—	—	—	—
2000	—	—	—	—	—	—	—	—	—	—

Medium Static 1216-2170 RPM,

NOTE: Fan tables include highest gas heat. Utilize static pressure deduction tables for lower gas heat capacities.

48FCFA05 THREE PHASE – HIGH STATIC — 4 TON HORIZONTAL SUPPLY (RPM - VDC)

CFM	AVAILABLE EXTERNAL STATIC PRESSURE (in. wg)									
	0.2		0.4		0.6		0.8		1.0	
	RPM	Vdc	RPM	Vdc	RPM	Vdc	RPM	Vdc	RPM	Vdc
1200	1216	4.6	1411	5.3	1576	5.9	1722	6.5	1855	7.0
1300	1282	4.8	1470	5.5	1631	6.1	1773	6.7	1904	7.2
1400	1351	5.1	1531	5.8	1688	6.3	1827	6.9	1955	7.3
1500	1420	5.3	1593	6.0	1746	6.6	1882	7.1	2008	7.5
1600	1491	5.6	1657	6.2	1806	6.8	1940	7.3	2062	7.8
1700	1563	5.9	1722	6.5	1866	7.0	1997	7.5	2118	8.0
1800	1636	6.2	1788	6.7	1928	7.2	2056	7.7	2175	8.2
1900	1710	6.4	1856	7.0	1991	7.5	2116	8.0	2233	8.4
2000	1784	6.7	1924	7.2	2055	7.7	2178	8.2	2292	8.6

CFM	AVAILABLE EXTERNAL STATIC PRESSURE (in. wg)									
	1.2		1.4		1.6		1.8		2.0	
	RPM	Vdc	RPM	Vdc	RPM	Vdc	RPM	Vdc	RPM	Vdc
1200	1978	7.4	2094	7.9	2204	8.3	2308	8.7	2409	9.1
1300	2025	7.6	2139	8.0	2246	8.4	2349	8.8	2447	9.2
1400	2073	7.8	2185	8.2	2291	8.6	2392	9.0	2488	9.4
1500	2124	8.0	2233	8.4	2337	8.8	2437	9.2	2532	9.5
1600	2176	8.2	2284	8.6	2386	9.0	2483	9.3	2577	9.7
1700	2230	8.4	2336	8.8	2436	9.2	2532	9.5	2624	9.9
1800	2285	8.6	2389	9.0	2488	9.4	2582	9.7	—	—
1900	2341	8.8	2443	9.2	2541	9.6	2634	9.9	—	—
2000	2399	9.0	2499	9.4	2595	9.8	—	—	—	—

High Static 1216-2660 RPM

NOTE: Fan tables include highest gas heat. Utilize static pressure deduction tables for lower gas heat capacities.

48FCFA06 SINGLE PHASE — 5 TON HORIZONTAL SUPPLY (RPM - BHP)

CFM	AVAILABLE EXTERNAL STATIC PRESSURE (in. wg)									
	0.2		0.4		0.6		0.8		1.0	
	RPM	BHP	RPM	BHP	RPM	BHP	RPM	BHP	RPM	BHP
1500	1420	0.31	1593	0.43	1746	0.57	1883	0.71	2008	0.86
1625	1509	0.37	1673	0.50	1820	0.64	1954	0.79	2076	0.95
1750	1599	0.43	1755	0.57	1897	0.73	2026	0.88	2146	1.05
1875	1691	0.51	1839	0.66	1975	0.82	2101	0.98	2218	1.16
2000	1784	0.60	1925	0.76	2056	0.92	2178	1.10	2291	1.28
2125	1878	0.70	2011	0.86	2138	1.04	2255	1.22	2367	1.41
2250	1974	0.81	2100	0.98	2221	1.16	2335	1.35	—	—
2375	2070	0.94	2189	1.11	2305	1.30	—	—	—	—
2500	2166	1.08	2280	1.25	—	—	—	—	—	—

CFM	AVAILABLE EXTERNAL STATIC PRESSURE (in. wg)									
	1.2		1.4		1.6		1.8		2.0	
	RPM	BHP	RPM	BHP	RPM	BHP	RPM	BHP	RPM	BHP
1500	2124	1.02	2234	1.19	2338	1.36	—	—	—	—
1625	2190	1.12	2297	1.29	—	—	—	—	—	—
1750	2257	1.22	2362	1.40	—	—	—	—	—	—
1875	2327	1.34	—	—	—	—	—	—	—	—
2000	—	—	—	—	—	—	—	—	—	—
2125	—	—	—	—	—	—	—	—	—	—
2250	—	—	—	—	—	—	—	—	—	—
2375	—	—	—	—	—	—	—	—	—	—
2500	—	—	—	—	—	—	—	—	—	—

Standard Static 1420-2150 RPM, 1.06 Max BHP

Medium Static 1420-2390 RPM, 1.44 Max BHP

NOTE: Fan tables include highest gas heat. Utilize static pressure deduction tables for lower gas heat capacities.

48FCFA06 SINGLE PHASE – STANDARD STATIC — 5 TON HORIZONTAL SUPPLY (RPM - VDC)

CFM	AVAILABLE EXTERNAL STATIC PRESSURE (in. wg)									
	0.2		0.4		0.6		0.8		1.0	
	RPM	Vdc	RPM	Vdc	RPM	Vdc	RPM	Vdc	RPM	Vdc
1500	1420	6.6	1593	7.4	1746	8.1	1883	8.8	2008	9.3
1625	1509	7.0	1673	7.8	1820	8.5	1954	9.1	2076	9.7
1750	1599	7.4	1755	8.2	1897	8.8	2026	9.4	2146	10.0
1875	1691	7.9	1839	8.6	1975	9.2	2101	9.8	—	—
2000	1784	8.3	1925	9.0	2056	9.6	—	—	—	—
2125	1878	8.7	2011	9.4	2138	9.9	—	—	—	—
2250	1974	9.2	2100	9.8	—	—	—	—	—	—
2375	2070	9.6	—	—	—	—	—	—	—	—
2500	–	–	—	—	—	—	—	—	—	—

CFM	AVAILABLE EXTERNAL STATIC PRESSURE (in. wg)									
	1.2		1.4		1.6		1.8		2.0	
	RPM	Vdc	RPM	Vdc	RPM	Vdc	RPM	Vdc	RPM	Vdc
1500	2124	9.9	—	—	—	—	—	—	—	—
1625	—	—	—	—	—	—	—	—	—	—
1750	—	—	—	—	—	—	—	—	—	—
1875	—	—	—	—	—	—	—	—	—	—
2000	—	—	—	—	—	—	—	—	—	—
2125	—	—	—	—	—	—	—	—	—	—
2250	—	—	—	—	—	—	—	—	—	—
2375	—	—	—	—	—	—	—	—	—	—
2500	—	—	—	—	—	—	—	—	—	—

Standard Static 1420-2150 RPM

NOTE: Fan tables include highest gas heat. Utilize static pressure deduction tables for lower gas heat capacities.

Fan data (cont)

48FCFA06 SINGLE PHASE – MEDIUM STATIC — 5 TON HORIZONTAL SUPPLY (RPM - VDC)

CFM	AVAILABLE EXTERNAL STATIC PRESSURE (in. wg)									
	0.2		0.4		0.6		0.8		1.0	
	RPM	Vdc	RPM	Vdc	RPM	Vdc	RPM	Vdc	RPM	Vdc
1500	1420	5.9	1593	6.7	1746	7.3	1883	7.9	2008	8.4
1625	1509	6.3	1673	7.0	1820	7.6	1954	8.2	2076	8.7
1750	1599	6.7	1755	7.3	1897	7.9	2026	8.5	2146	9.0
1875	1691	7.1	1839	7.7	1975	8.3	2101	8.8	2218	9.3
2000	1784	7.5	1925	8.1	2056	8.6	2178	9.1	2291	9.6
2125	1878	7.9	2011	8.4	2138	8.9	2255	9.4	2367	9.9
2250	1974	8.3	2100	8.8	2221	9.3	2335	9.8	—	—
2375	2070	8.7	2189	9.2	2305	9.6	—	—	—	—
2500	2166	9.1	2280	9.5	—	—	—	—	—	—

CFM	AVAILABLE EXTERNAL STATIC PRESSURE (in. wg)									
	1.2		1.4		1.6		1.8		2.0	
	RPM	Vdc	RPM	Vdc	RPM	Vdc	RPM	Vdc	RPM	Vdc
1500	2124	8.9	2234	9.3	2338	9.8	—	—	—	—
1625	2190	9.2	2297	9.6	—	—	—	—	—	—
1750	2257	9.4	2362	9.9	—	—	—	—	—	—
1875	2327	9.7	—	—	—	—	—	—	—	—
2000	—	—	—	—	—	—	—	—	—	—
2125	—	—	—	—	—	—	—	—	—	—
2250	—	—	—	—	—	—	—	—	—	—
2375	—	—	—	—	—	—	—	—	—	—
2500	—	—	—	—	—	—	—	—	—	—

Medium Static 1420-2390 RPM

NOTE: Fan tables include highest gas heat. Utilize static pressure deduction tables for lower gas heat capacities.

48FCFA06 THREE PHASE — 5 TON HORIZONTAL SUPPLY (RPM - BHP)

CFM	AVAILABLE EXTERNAL STATIC PRESSURE (in. wg)									
	0.2		0.4		0.6		0.8		1.0	
	RPM	BHP	RPM	BHP	RPM	BHP	RPM	BHP	RPM	BHP
1500	1420	0.31	1593	0.43	1746	0.57	1883	0.71	2008	0.86
1625	1509	0.37	1673	0.50	1820	0.64	1954	0.79	2076	0.95
1750	1599	0.43	1755	0.57	1897	0.73	2026	0.88	2146	1.05
1875	1691	0.51	1839	0.66	1976	0.82	2102	0.99	2218	1.16
2000	1784	0.60	1924	0.76	2056	0.92	2178	1.10	2291	1.28
2125	1879	0.70	2011	0.86	2137	1.03	2256	1.22	2367	1.41
2250	1974	0.81	2099	0.98	2221	1.16	2335	1.35	2444	1.55
2375	2070	0.94	2189	1.11	2305	1.30	2416	1.49	2522	1.70
2500	2166	1.08	2280	1.25	2391	1.45	2499	1.65	2601	1.86

CFM	AVAILABLE EXTERNAL STATIC PRESSURE (in. wg)									
	1.2		1.4		1.6		1.8		2.0	
	RPM	BHP	RPM	BHP	RPM	BHP	RPM	BHP	RPM	BHP
1500	2124	1.02	2233	1.19	2337	1.36	2436	1.54	2532	1.73
1625	2190	1.12	2296	1.29	2398	1.47	2495	1.65	2589	1.85
1750	2257	1.22	2362	1.40	2462	1.59	2557	1.78	2648	1.97
1875	2327	1.34	2430	1.52	2528	1.72	2621	1.91	2710	2.11
2000	2398	1.46	2499	1.66	2595	1.85	2687	2.06	2775	2.27
2125	2471	1.60	2570	1.80	2665	2.01	2755	2.22	—	—
2250	2546	1.75	2643	1.96	2735	2.17	2824	2.39	—	—
2375	2622	1.91	2717	2.12	2807	2.34	—	—	—	—
2500	2699	2.08	2792	2.30	—	—	—	—	—	—

Standard Static 1420-2150 RPM, 1.06 Max BHP

Medium Static 1420-2390 RPM, 1.44 Max BHP

High Static 1420-2836 RPM, 2.43 Max BHP

NOTE: Fan tables include highest gas heat. Utilize static pressure deduction tables for lower gas heat capacities.

48FCFA06 THREE PHASE – STANDARD STATIC — 5 TON HORIZONTAL SUPPLY (RPM - VDC)

CFM	AVAILABLE EXTERNAL STATIC PRESSURE (in. wg)									
	0.2		0.4		0.6		0.8		1.0	
	RPM	Vdc	RPM	Vdc	RPM	Vdc	RPM	Vdc	RPM	Vdc
1500	1420	6.6	1593	7.4	1746	8.1	1883	8.8	2008	9.3
1625	1509	7.0	1673	7.8	1820	8.5	1954	9.1	2076	9.7
1750	1599	7.4	1755	8.2	1897	8.8	2026	9.4	2146	10.0
1875	1691	7.9	1839	8.6	1976	9.2	2102	9.8	—	—
2000	1784	8.3	1924	8.9	2056	9.6	—	—	—	—
2125	1878	8.7	2011	9.4	2137	9.9	—	—	—	—
2250	1974	9.2	2099	9.8	—	—	—	—	—	—
2375	2070	9.6	—	—	—	—	—	—	—	—
2500	—	—	—	—	—	—	—	—	—	—

CFM	AVAILABLE EXTERNAL STATIC PRESSURE (in. wg)									
	1.2		1.4		1.6		1.8		2.0	
	RPM	Vdc	RPM	Vdc	RPM	Vdc	RPM	Vdc	RPM	Vdc
1500	2124	9.9	—	—	—	—	—	—	—	—
1625	—	—	—	—	—	—	—	—	—	—
1750	—	—	—	—	—	—	—	—	—	—
1875	—	—	—	—	—	—	—	—	—	—
2000	—	—	—	—	—	—	—	—	—	—
2125	—	—	—	—	—	—	—	—	—	—
2250	—	—	—	—	—	—	—	—	—	—
2375	—	—	—	—	—	—	—	—	—	—
2500	—	—	—	—	—	—	—	—	—	—

Standard Static 1420-2150 RPM

NOTE: Fan tables include highest gas heat. Utilize static pressure deduction tables for lower gas heat capacities.

48FCFA06 THREE PHASE – MEDIUM STATIC — 5 TON HORIZONTAL SUPPLY (RPM - VDC)

CFM	AVAILABLE EXTERNAL STATIC PRESSURE (in. wg)									
	0.2		0.4		0.6		0.8		1.0	
	RPM	Vdc	RPM	Vdc	RPM	Vdc	RPM	Vdc	RPM	Vdc
1500	1420	5.9	1593	6.7	1746	7.3	1883	7.9	2008	8.4
1625	1509	6.3	1673	7.0	1820	7.6	1954	8.2	2076	8.7
1750	1599	6.7	1755	7.3	1897	7.9	2026	8.5	2146	9.0
1875	1691	7.1	1839	7.7	1976	8.3	2102	8.8	2218	9.3
2000	1784	7.5	1924	8.1	2056	8.6	2178	9.1	2291	9.6
2125	1878	7.9	2011	8.4	2137	8.9	2256	9.4	2367	9.9
2250	1974	8.3	2099	8.8	2221	9.3	2335	9.8	—	—
2375	2070	8.7	2189	9.2	2305	9.6	—	—	—	—
2500	2166	9.1	2280	9.5	—	—	—	—	—	—

CFM	AVAILABLE EXTERNAL STATIC PRESSURE (in. wg)									
	1.2		1.4		1.6		1.8		2.0	
	RPM	Vdc	RPM	Vdc	RPM	Vdc	RPM	Vdc	RPM	Vdc
1500	2124	8.9	2233	9.3	2337	9.8	—	—	—	—
1625	2190	9.2	2296	9.6	—	—	—	—	—	—
1750	2257	9.4	2362	9.9	—	—	—	—	—	—
1875	2327	9.7	—	—	—	—	—	—	—	—
2000	—	—	—	—	—	—	—	—	—	—
2125	—	—	—	—	—	—	—	—	—	—
2250	—	—	—	—	—	—	—	—	—	—
2375	—	—	—	—	—	—	—	—	—	—
2500	—	—	—	—	—	—	—	—	—	—

Medium Static 1420-2390 RPM

NOTE: Fan tables include highest gas heat. Utilize static pressure deduction tables for lower gas heat capacities.

48FCFA06 THREE PHASE – HIGH STATIC — 5 TON HORIZONTAL SUPPLY (RPM - VDC)

CFM	AVAILABLE EXTERNAL STATIC PRESSURE (in. wg)									
	0.2		0.4		0.6		0.8		1.0	
	RPM	Vdc	RPM	Vdc	RPM	Vdc	RPM	Vdc	RPM	Vdc
1500	1420	5.0	1593	5.6	1746	6.2	1883	6.6	2008	7.1
1625	1509	5.3	1673	5.9	1820	6.4	1954	6.9	2076	7.3
1750	1599	5.6	1755	6.2	1897	6.7	2026	7.1	2146	7.6
1875	1691	6.0	1839	6.5	1976	7.0	2102	7.4	2218	7.8
2000	1784	6.3	1924	6.8	2056	7.2	2178	7.7	2291	8.1
2125	1878	6.6	2011	7.1	2137	7.5	2256	8.0	2367	8.3
2250	1974	7.0	2099	7.4	2221	7.8	2335	8.2	2444	8.6
2375	2070	7.3	2189	7.7	2305	8.1	2416	8.5	2522	8.9
2500	2166	7.6	2280	8.0	2391	8.4	2499	8.8	2601	9.2

CFM	AVAILABLE EXTERNAL STATIC PRESSURE (in. wg)									
	1.2		1.4		1.6		1.8		2.0	
	RPM	Vdc	RPM	Vdc	RPM	Vdc	RPM	Vdc	RPM	Vdc
1500	2124	7.5	2233	7.9	2337	8.2	2436	8.6	2532	8.9
1625	2190	7.7	2296	8.1	2398	8.5	2495	8.8	2589	9.1
1750	2257	8.0	2362	8.3	2462	8.7	2557	9.0	2648	9.3
1875	2327	8.2	2430	8.6	2528	8.9	2621	9.2	2710	9.6
2000	2398	8.5	2499	8.8	2595	9.2	2687	9.5	2775	9.8
2125	2471	8.7	2570	9.1	2665	9.4	2755	9.7	—	—
2250	2546	9.0	2643	9.3	2735	9.6	2824	10.0	—	—
2375	2622	9.2	2717	9.6	2807	9.9	—	—	—	—
2500	2699	9.5	2792	9.8	—	—	—	—	—	—

High Static 1420-2836 RPM

NOTE: Fan tables include highest gas heat. Utilize static pressure deduction tables for lower gas heat capacities.

48FCFM07 THREE PHASE — 6 TON HORIZONTAL SUPPLY (RPM - BHP)

CFM	AVAILABLE EXTERNAL STATIC PRESSURE (in. wg)									
	0.2		0.4		0.6		0.8		1.0	
	RPM	BHP	RPM	BHP	RPM	BHP	RPM	BHP	RPM	BHP
1800	1537	0.38	1685	0.51	1824	0.64	1953	0.79	2071	0.94
1950	1641	0.47	1778	0.59	1911	0.74	2035	0.89	2150	1.05
2100	1748	0.56	1874	0.69	2000	0.84	2119	1.00	2231	1.17
2250	1855	0.67	1973	0.81	2091	0.96	2206	1.13	2314	1.31
2400	1964	0.80	2074	0.94	2185	1.10	2294	1.27	2399	1.45
2550	2074	0.94	2176	1.08	2281	1.25	2385	1.43	2486	1.62
2700	2185	1.10	2281	1.25	2379	1.42	2478	1.60	2575	1.80
2850	2296	1.27	2386	1.43	2479	1.60	2573	1.79	2666	1.99
3000	2408	1.47	2493	1.63	2581	1.81	2670	2.00	2759	2.21

CFM	AVAILABLE EXTERNAL STATIC PRESSURE (in. wg)									
	1.2		1.4		1.6		1.8		2.0	
	RPM	BHP	RPM	BHP	RPM	BHP	RPM	BHP	RPM	BHP
1800	2182	1.10	2285	1.26	2382	1.43	2476	1.60	2564	1.78
1950	2258	1.21	2359	1.39	2455	1.56	2547	1.74	2634	1.93
2100	2337	1.34	2436	1.52	2530	1.71	2620	1.90	2706	2.09
2250	2417	1.49	2514	1.67	2606	1.86	2695	2.06	2780	2.26
2400	2499	1.64	2594	1.84	2685	2.04	2771	2.24	—	—
2550	2583	1.81	2676	2.02	2765	2.22	—	—	—	—
2700	2669	2.00	2759	2.21	—	—	—	—	—	—
2850	2757	2.20	—	—	—	—	—	—	—	—
3000			—	—	—	—	—	—	—	—

Standard Static 1537-2300 RPM, 1.31 Max BHP

Medium Static 1537-2530 RPM, 1.76 Max BHP

High Static 1537-2836 RPM, 2.43 Max BHP

NOTE: Fan tables include highest gas heat. Utilize static pressure deduction tables for lower gas heat capacities.

48FCEM07 THREE PHASE – STANDARD STATIC — 6 TON HORIZONTAL SUPPLY (RPM - VDC)

CFM	AVAILABLE EXTERNAL STATIC PRESSURE (in. wg)									
	0.2		0.4		0.6		0.8		1.0	
	RPM	Vdc	RPM	Vdc	RPM	Vdc	RPM	Vdc	RPM	Vdc
1800	1537	6.7	1685	7.3	1824	7.9	1953	8.5	2071	9.0
1950	1641	7.1	1778	7.7	1911	8.3	2035	8.8	2150	9.3
2100	1748	7.6	1874	8.1	2000	8.7	2119	9.2	2231	9.7
2250	1855	8.1	1973	8.6	2091	9.1	2206	9.6	—	—
2400	1964	8.5	2074	9.0	2185	9.5	2294	10.0	—	—
2550	2074	9.0	2176	9.5	2281	9.9	—	—	—	—
2700	2185	9.5	2281	9.9	—	—	—	—	—	—
2850	2296	10.0	—	—	—	—	—	—	—	—
3000	—	—	—	—	—	—	—	—	—	—

CFM	AVAILABLE EXTERNAL STATIC PRESSURE (in. wg)									
	1.2		1.4		1.6		1.8		2.0	
	RPM	Vdc	RPM	Vdc	RPM	Vdc	RPM	Vdc	RPM	Vdc
1800	2182	9.5	2285	9.9	—	—	—	—	—	—
1950	2258	9.8	—	—	—	—	—	—	—	—
2100	—	—	—	—	—	—	—	—	—	—
2250	—	—	—	—	—	—	—	—	—	—
2400	—	—	—	—	—	—	—	—	—	—
2550	—	—	—	—	—	—	—	—	—	—
2700	—	—	—	—	—	—	—	—	—	—
2850	—	—	—	—	—	—	—	—	—	—
3000	—	—	—	—	—	—	—	—	—	—

Standard Static 1537-2300 RPM

NOTE: Fan tables include highest gas heat. Utilize static pressure deduction tables for lower gas heat capacities.

Fan data (cont)

48FCEM07 THREE PHASE – MEDIUM STATIC — 6 TON HORIZONTAL SUPPLY (RPM - VDC)

CFM	AVAILABLE EXTERNAL STATIC PRESSURE (in. wg)									
	0.2		0.4		0.6		0.8		1.0	
	RPM	Vdc	RPM	Vdc	RPM	Vdc	RPM	Vdc	RPM	Vdc
1800	1537	6.1	1685	6.7	1824	7.2	1953	7.7	2071	8.2
1950	1641	6.5	1778	7.0	1911	7.6	2035	8.0	2150	8.5
2100	1748	6.9	1874	7.4	2000	7.9	2119	8.4	2231	8.8
2250	1855	7.3	1973	7.8	2091	8.3	2206	8.7	2314	9.1
2400	1964	7.8	2074	8.2	2185	8.6	2294	9.1	2399	9.5
2550	2074	8.2	2176	8.6	2281	9.0	2385	9.4	2486	9.8
2700	2185	8.6	2281	9.0	2379	9.4	2478	9.8	—	—
2850	2296	9.1	2386	9.4	2479	9.8	—	—	—	—
3000	2408	9.5	2493	9.9	—	—	—	—	—	—

CFM	AVAILABLE EXTERNAL STATIC PRESSURE (in. wg)									
	1.2		1.4		1.6		1.8		2.0	
	RPM	Vdc	RPM	Vdc	RPM	Vdc	RPM	Vdc	RPM	Vdc
1800	2182	8.6	2285	9.0	2382	9.4	2476	9.8		
1950	2258	8.9	2359	9.3	2455	9.7	—	—	—	—
2100	2337	9.2	2436	9.6	2530	10.0	—	—	—	—
2250	2417	9.6	2514	9.9	—	—	—	—	—	—
2400	2499	9.9	—	—	—	—	—	—	—	—
2550	—	—	—	—	—	—	—	—	—	—
2700	—	—	—	—	—	—	—	—	—	—
2850	—	—	—	—	—	—	—	—	—	—
3000	—	—	—	—	—	—	—	—	—	—

Medium Static 1537-2530 RPM

NOTE: Fan tables include highest gas heat. Utilize static pressure deduction tables for lower gas heat capacities.

48FCEM07 THREE PHASE – HIGH STATIC — 6 TON HORIZONTAL SUPPLY (RPM - VDC)

CFM	AVAILABLE EXTERNAL STATIC PRESSURE (in. wg)									
	0.2		0.4		0.6		0.8		1.0	
	RPM	Vdc	RPM	Vdc	RPM	Vdc	RPM	Vdc	RPM	Vdc
1800	1537	5.4	1685	5.9	1824	6.4	1953	6.9	2071	7.3
1950	1641	5.8	1778	6.3	1911	6.7	2035	7.2	2150	7.6
2100	1748	6.2	1874	6.6	2000	7.1	2119	7.5	2231	7.9
2250	1855	6.5	1973	7.0	2091	7.4	2206	7.8	2314	8.2
2400	1964	6.9	2074	7.3	2185	7.7	2294	8.1	2399	8.5
2550	2074	7.3	2176	7.7	2281	8.0	2385	8.4	2486	8.8
2700	2185	7.7	2281	8.0	2379	8.4	2478	8.7	2575	9.1
2850	2296	8.1	2386	8.4	2479	8.7	2573	9.1	2666	9.4
3000	2408	8.5	2493	8.8	2581	9.1	2670	9.4	2759	9.7

CFM	AVAILABLE EXTERNAL STATIC PRESSURE (in. wg)									
	1.2		1.4		1.6		1.8		2.0	
	RPM	Vdc	RPM	Vdc	RPM	Vdc	RPM	Vdc	RPM	Vdc
1800	2182	7.7	2285	8.1	2382	8.4	2476	8.7	2564	9.0
1950	2258	8.0	2359	8.3	2455	8.7	2547	9.0	2634	9.3
2100	2337	8.2	2436	8.6	2530	8.9	2620	9.2	2706	9.5
2250	2417	8.5	2514	8.9	2606	9.2	2695	9.5	2780	9.8
2400	2499	8.8	2594	9.1	2685	9.5	2771	9.8	—	—
2550	2583	9.1	2676	9.4	2765	9.7	—	—	—	—
2700	2669	9.4	2759	9.7	—	—	—	—	—	—
2850	2757	9.7	—	—	—	—	—	—	—	—
3000	—	—	—	—	—	—	—	—	—	—

High Static 1537-2836 RPM

NOTE: Fan tables include highest gas heat. Utilize static pressure deduction tables for lower gas heat capacities.

50FC-A04 SINGLE PHASE — 3 TON VERTICAL SUPPLY (RPM - BHP)

CFM	AVAILABLE EXTERNAL STATIC PRESSURE (in. wg)									
	0.2		0.4		0.6		0.8		1.0	
	RPM	BHP	RPM	BHP	RPM	BHP	RPM	BHP	RPM	BHP
900	1040	0.08	1307	0.16	1526	0.25	1705	0.35	1859	0.45
975	1082	0.09	1336	0.17	1554	0.26	1736	0.36	1892	0.47
1050	1127	0.10	1366	0.18	1582	0.28	1766	0.38	1925	0.50
1125	1175	0.11	1398	0.19	1609	0.29	1795	0.40	1956	0.52
1200	1225	0.13	1434	0.21	1638	0.31	1822	0.42	1984	0.54
1275	1277	0.15	1472	0.22	1667	0.32	1849	0.44	2012	0.57
1350	1330	0.16	1514	0.24	1699	0.34	1878	0.46	2040	0.59
1425	1385	0.19	1557	0.26	1734	0.36	1906	0.48	2068	0.62
1500	1440	0.21	1603	0.29	1771	0.39	1937	0.51	2095	0.64

CFM	AVAILABLE EXTERNAL STATIC PRESSURE (in. wg)									
	1.2		1.4		1.6		1.8		2.0	
	RPM	BHP	RPM	BHP	RPM	BHP	RPM	BHP	RPM	BHP
900	1995	0.55	2119	0.66	2234	0.78	2342	0.89	2444	1.02
975	2031	0.58	2156	0.70	2272	0.82	2380	0.94	2482	1.06
1050	2065	0.61	2192	0.73	2309	0.86	2418	0.98	—	—
1125	2098	0.64	2226	0.77	2345	0.90	2454	1.03	—	—
1200	2129	0.67	2259	0.80	2379	0.94	2490	1.07	—	—
1275	2159	0.70	2291	0.84	2412	0.98	—	—	—	—
1350	2187	0.73	2321	0.87	2444	1.02	—	—	—	—
1425	2215	0.76	2350	0.90	2474	1.05	—	—	—	—
1500	2242	0.78	2378	0.94	—	—	—	—	—	—

Standard Static 1040-1890 RPM, 0.44 Max BHP

Medium Static 1040-2190 RPM, 0.71 Max BHP

High Static 1040-2490 RPM, 1.07 Max BHP

50FC-A04 SINGLE PHASE – STANDARD STATIC — 3 TON VERTICAL SUPPLY (RPM - VDC)

CFM	AVAILABLE EXTERNAL STATIC PRESSURE (in. wg)									
	0.2		0.4		0.6		0.8		1.0	
	RPM	Vdc	RPM	Vdc	RPM	Vdc	RPM	Vdc	RPM	Vdc
900	1040	5.5	1307	6.9	1526	8.1	1705	9.0	—	—
975	1082	5.7	1336	7.1	1554	8.2	1736	9.2	—	—
1050	1127	6.0	1366	7.2	1582	8.4	1766	9.3	—	—
1125	1175	6.2	1398	7.4	1609	8.5	1795	9.5	—	—
1200	1225	6.5	1434	7.6	1638	8.7	1822	9.6	—	—
1275	1277	6.8	1472	7.8	1667	8.8	1849	9.8	—	—
1350	1330	7.0	1514	8.0	1699	9.0	—	—	—	—
1425	1385	7.3	1557	8.2	1734	9.2	—	—	—	—
1500	1440	7.6	1603	8.5	1771	9.4	—	—	—	—

CFM	AVAILABLE EXTERNAL STATIC PRESSURE (in. wg)									
	1.2		1.4		1.6		1.8		2.0	
	RPM	Vdc	RPM	Vdc	RPM	Vdc	RPM	Vdc	RPM	Vdc
900	—	—	—	—	—	—	—	—	—	—
975	—	—	—	—	—	—	—	—	—	—
1050	—	—	—	—	—	—	—	—	—	—
1125	—	—	—	—	—	—	—	—	—	—
1200	—	—	—	—	—	—	—	—	—	—
1275	—	—	—	—	—	—	—	—	—	—
1350	—	—	—	—	—	—	—	—	—	—
1425	—	—	—	—	—	—	—	—	—	—
1500	—	—	—	—	—	—	—	—	—	—

Standard Static 1040-1890 RPM

Fan data (cont)

50FC-A04 SINGLE PHASE – MEDIUM STATIC — 3 TON VERTICAL SUPPLY (RPM - VDC)

CFM	AVAILABLE EXTERNAL STATIC PRESSURE (in. wg)									
	0.2		0.4		0.6		0.8		1.0	
	RPM	Vdc	RPM	Vdc	RPM	Vdc	RPM	Vdc	RPM	Vdc
900	1040	4.7	1307	6.0	1526	7.0	1705	7.8	1859	8.5
975	1082	4.9	1336	6.1	1554	7.1	1736	7.9	1892	8.6
1050	1127	5.1	1366	6.2	1582	7.2	1766	8.1	1925	8.8
1125	1175	5.4	1398	6.4	1609	7.3	1795	8.2	1956	8.9
1200	1225	5.6	1434	6.5	1638	7.5	1822	8.3	1984	9.1
1275	1277	5.8	1472	6.7	1667	7.6	1849	8.4	2012	9.2
1350	1330	6.1	1514	6.9	1699	7.8	1878	8.6	2040	9.3
1425	1385	6.3	1557	7.1	1734	7.9	1906	8.7	2068	9.4
1500	1440	6.6	1603	7.3	1771	8.1	1937	8.8	2095	9.6

CFM	AVAILABLE EXTERNAL STATIC PRESSURE (in. wg)									
	1.2		1.4		1.6		1.8		2.0	
	RPM	Vdc	RPM	Vdc	RPM	Vdc	RPM	Vdc	RPM	Vdc
900	1995	9.1	2119	9.7	—	—	—	—	—	—
975	2031	9.3	2156	9.8	—	—	—	—	—	—
1050	2065	9.4	—	—	—	—	—	—	—	—
1125	2098	9.6	—	—	—	—	—	—	—	—
1200	2129	9.7	—	—	—	—	—	—	—	—
1275	2159	9.9	—	—	—	—	—	—	—	—
1350	2187	10.0	—	—	—	—	—	—	—	—
1425	—	—	—	—	—	—	—	—	—	—
1500	—	—	—	—	—	—	—	—	—	—

Medium Static 1040-2190 RPM

50FC-A04 SINGLE PHASE – HIGH STATIC — 3 TON VERTICAL SUPPLY (RPM - VDC)

CFM	AVAILABLE EXTERNAL STATIC PRESSURE (in. wg)									
	0.2		0.4		0.6		0.8		1.0	
	RPM	Vdc	RPM	Vdc	RPM	Vdc	RPM	Vdc	RPM	Vdc
900	1040	4.2	1307	5.2	1526	6.1	1705	6.8	1859	7.5
975	1082	4.3	1336	5.4	1554	6.2	1736	7.0	1892	7.6
1050	1127	4.5	1366	5.5	1582	6.4	1766	7.1	1925	7.7
1125	1175	4.7	1398	5.6	1609	6.5	1795	7.2	1956	7.9
1200	1225	4.9	1434	5.8	1638	6.6	1822	7.3	1984	8.0
1275	1277	5.1	1472	5.9	1667	6.7	1849	7.4	2012	8.1
1350	1330	5.3	1514	6.1	1699	6.8	1878	7.5	2040	8.2
1425	1385	5.6	1557	6.3	1734	7.0	1906	7.7	2068	8.3
1500	1440	5.8	1603	6.4	1771	7.1	1937	7.8	2095	8.4

CFM	AVAILABLE EXTERNAL STATIC PRESSURE (in. wg)									
	1.2		1.4		1.6		1.8		2.0	
	RPM	Vdc	RPM	Vdc	RPM	Vdc	RPM	Vdc	RPM	Vdc
900	1995	8.0	2119	8.5	2234	9.0	2342	9.4	2444	9.8
975	2031	8.2	2156	8.7	2272	9.1	2380	9.6	2482	10.0
1050	2065	8.3	2192	8.8	2309	9.3	2418	9.7	—	—
1125	2098	8.4	2226	8.9	2345	9.4	2454	9.9	—	—
1200	2129	8.6	2259	9.1	2379	9.6	2490	10.0	—	—
1275	2159	8.7	2291	9.2	2412	9.7	—	—	—	—
1350	2187	8.8	2321	9.3	2444	9.8	—	—	—	—
1425	2215	8.9	2350	9.4	2474	9.9	—	—	—	—
1500	2242	9.0	2378	9.6	—	—	—	—	—	—

High Static 1040-2490 RPM

50FC-A04 THREE PHASE — 3 TON VERTICAL SUPPLY (RPM - VDC)

CFM	AVAILABLE EXTERNAL STATIC PRESSURE (in. wg)									
	0.2		0.4		0.6		0.8		1.0	
	RPM	BHP	RPM	BHP	RPM	BHP	RPM	BHP	RPM	BHP
900	1040	0.08	1307	0.16	1526	0.25	1705	0.35	1859	0.45
975	1082	0.09	1336	0.17	1554	0.26	1736	0.36	1892	0.47
1050	1127	0.10	1366	0.18	1582	0.28	1766	0.38	1925	0.50
1125	1175	0.11	1398	0.19	1609	0.29	1795	0.40	1956	0.52
1200	1225	0.13	1434	0.21	1638	0.31	1822	0.42	1984	0.54
1275	1277	0.15	1472	0.22	1667	0.32	1849	0.44	2012	0.57
1350	1330	0.16	1514	0.24	1699	0.34	1878	0.46	2040	0.59
1425	1385	0.19	1557	0.26	1734	0.36	1906	0.48	2068	0.62
1500	1440	0.21	1603	0.29	1771	0.39	1937	0.51	2095	0.64

CFM	AVAILABLE EXTERNAL STATIC PRESSURE (in. wg)									
	1.2		1.4		1.6		1.8		2.0	
	RPM	BHP	RPM	BHP	RPM	BHP	RPM	BHP	RPM	BHP
900	1995	0.55	2119	0.66	2234	0.78	2342	0.89	2444	1.02
975	2031	0.58	2156	0.70	2272	0.82	2380	0.94	2482	1.06
1050	2065	0.61	2192	0.73	2309	0.86	2418	0.98	—	—
1125	2098	0.64	2226	0.77	2345	0.90	2454	1.03	—	—
1200	2129	0.67	2259	0.80	2379	0.94	2490	1.07	—	—
1275	2159	0.70	2291	0.84	2412	0.98	—	—	—	—
1350	2187	0.73	2321	0.87	2444	1.02	—	—	—	—
1425	2215	0.76	2350	0.90	2474	1.05	—	—	—	—
1500	2242	0.78	2378	0.94	—	—	—	—	—	—

Standard Static 1040-1890 RPM, 0.44 Max BHP

Medium Static 1040-2190 RPM, 0.71 Max BHP

High Static 1040-2490 RPM, 1.07 Max BHP

50FC-A04 THREE PHASE – STANDARD STATIC — 3 TON VERTICAL SUPPLY (RPM - VDC)

CFM	AVAILABLE EXTERNAL STATIC PRESSURE (in. wg)									
	0.2		0.4		0.6		0.8		1.0	
	RPM	Vdc	RPM	Vdc	RPM	Vdc	RPM	Vdc	RPM	Vdc
900	1040	5.5	1307	6.9	1526	8.1	1705	9.0	—	—
975	1082	5.7	1336	7.1	1554	8.2	1736	9.2	—	—
1050	1127	6.0	1366	7.2	1582	8.4	1766	9.3	—	—
1125	1175	6.2	1398	7.4	1609	8.5	1795	9.5	—	—
1200	1225	6.5	1434	7.6	1638	8.7	1822	9.6	—	—
1275	1277	6.8	1472	7.8	1667	8.8	1849	9.8	—	—
1350	1330	7.0	1514	8.0	1699	9.0	—	—	—	—
1425	1385	7.3	1557	8.2	1734	9.2	—	—	—	—
1500	1440	7.6	1603	8.5	1771	9.4	—	—	—	—

CFM	AVAILABLE EXTERNAL STATIC PRESSURE (in. wg)									
	1.2		1.4		1.6		1.8		2.0	
	RPM	Vdc	RPM	Vdc	RPM	Vdc	RPM	Vdc	RPM	Vdc
900	—	—	—	—	—	—	—	—	—	—
975	—	—	—	—	—	—	—	—	—	—
1050	—	—	—	—	—	—	—	—	—	—
1125	—	—	—	—	—	—	—	—	—	—
1200	—	—	—	—	—	—	—	—	—	—
1275	—	—	—	—	—	—	—	—	—	—
1350	—	—	—	—	—	—	—	—	—	—
1425	—	—	—	—	—	—	—	—	—	—
1500	—	—	—	—	—	—	—	—	—	—

Standard Static 1040-1890 RPM

Fan data (cont)

50FC-A04 THREE PHASE – MEDIUM STATIC — 3 TON VERTICAL SUPPLY (RPM - VDC)

CFM	AVAILABLE EXTERNAL STATIC PRESSURE (in. wg)									
	0.2		0.4		0.6		0.8		1.0	
	RPM	Vdc	RPM	Vdc	RPM	Vdc	RPM	Vdc	RPM	Vdc
900	1040	4.7	1307	6.0	1526	7.0	1705	7.8	1859	8.5
975	1082	4.9	1336	6.1	1554	7.1	1736	7.9	1892	8.6
1050	1127	5.1	1366	6.2	1582	7.2	1766	8.1	1925	8.8
1125	1175	5.4	1398	6.4	1609	7.3	1795	8.2	1956	8.9
1200	1225	5.6	1434	6.5	1638	7.5	1822	8.3	1984	9.1
1275	1277	5.8	1472	6.7	1667	7.6	1849	8.4	2012	9.2
1350	1330	6.1	1514	6.9	1699	7.8	1878	8.6	2040	9.3
1425	1385	6.3	1557	7.1	1734	7.9	1906	8.7	2068	9.4
1500	1440	6.6	1603	7.3	1771	8.1	1937	8.8	2095	9.6

CFM	AVAILABLE EXTERNAL STATIC PRESSURE (in. wg)									
	1.2		1.4		1.6		1.8		2.0	
	RPM	Vdc	RPM	Vdc	RPM	Vdc	RPM	Vdc	RPM	Vdc
900	1995	9.1	2119	9.7	—	—	—	—	—	—
975	2031	9.3	2156	9.8	—	—	—	—	—	—
1050	2065	9.4	—	—	—	—	—	—	—	—
1125	2098	9.6	—	—	—	—	—	—	—	—
1200	2129	9.7	—	—	—	—	—	—	—	—
1275	2159	9.9	—	—	—	—	—	—	—	—
1350	2187	10.0	—	—	—	—	—	—	—	—
1425	—	—	—	—	—	—	—	—	—	—
1500	—	—	—	—	—	—	—	—	—	—

Medium Static 1040-2190 RPM

50FC-A04 THREE PHASE – HIGH STATIC — 3 TON VERTICAL SUPPLY (RPM - VDC)

CFM	AVAILABLE EXTERNAL STATIC PRESSURE (in. wg)									
	0.2		0.4		0.6		0.8		1.0	
	RPM	Vdc	RPM	Vdc	RPM	Vdc	RPM	Vdc	RPM	Vdc
900	1040	4.2	1307	5.2	1526	6.1	1705	6.8	1859	7.5
975	1082	4.3	1336	5.4	1554	6.2	1736	7.0	1892	7.6
1050	1127	4.5	1366	5.5	1582	6.4	1766	7.1	1925	7.7
1125	1175	4.7	1398	5.6	1609	6.5	1795	7.2	1956	7.9
1200	1225	4.9	1434	5.8	1638	6.6	1822	7.3	1984	8.0
1275	1277	5.1	1472	5.9	1667	6.7	1849	7.4	2012	8.1
1350	1330	5.3	1514	6.1	1699	6.8	1878	7.5	2040	8.2
1425	1385	5.6	1557	6.3	1734	7.0	1906	7.7	2068	8.3
1500	1440	5.8	1603	6.4	1771	7.1	1937	7.8	2095	8.4

CFM	AVAILABLE EXTERNAL STATIC PRESSURE (in. wg)									
	1.2		1.4		1.6		1.8		2.0	
	RPM	Vdc	RPM	Vdc	RPM	Vdc	RPM	Vdc	RPM	Vdc
900	1995	8.0	2119	8.5	2234	9.0	2342	9.4	2444	9.8
975	2031	8.2	2156	8.7	2272	9.1	2380	9.6	2482	10.0
1050	2065	8.3	2192	8.8	2309	9.3	2418	9.7	—	—
1125	2098	8.4	2226	8.9	2345	9.4	2454	9.9	—	—
1200	2129	8.6	2259	9.1	2379	9.6	2490	10.0	—	—
1275	2159	8.7	2291	9.2	2412	9.7	—	—	—	—
1350	2187	8.8	2321	9.3	2444	9.8	—	—	—	—
1425	2215	8.9	2350	9.4	2474	9.9	—	—	—	—
1500	2242	9.0	2378	9.6	—	—	—	—	—	—

High Static 1040-2490 RPM

50FC-A05 SINGLE PHASE — 4 TON VERTICAL SUPPLY (RPM - BHP)

CFM	AVAILABLE EXTERNAL STATIC PRESSURE (in. wg)									
	0.2		0.4		0.6		0.8		1.0	
	RPM	BHP	RPM	BHP	RPM	BHP	RPM	BHP	RPM	BHP
1200	1120	0.15	1327	0.25	1506	0.37	1667	0.50	1814	0.65
1300	1178	0.18	1375	0.28	1549	0.40	1705	0.54	1849	0.69
1400	1238	0.21	1424	0.31	1593	0.44	1745	0.57	1886	0.73
1500	1300	0.24	1476	0.35	1639	0.47	1788	0.62	1925	0.77
1600	1365	0.27	1530	0.39	1688	0.52	1832	0.66	1966	0.82
1700	1430	0.31	1586	0.43	1737	0.56	1878	0.71	2009	0.87
1800	1497	0.36	1644	0.48	1789	0.61	1925	0.76	2053	0.93
1900	1565	0.41	1703	0.53	1842	0.67	1974	0.82	2099	0.99
2000	1633	0.46	1764	0.59	1897	0.73	2025	0.89	2146	1.05

CFM	AVAILABLE EXTERNAL STATIC PRESSURE (in. wg)									
	1.2		1.4		1.6		1.8		2.0	
	RPM	BHP	RPM	BHP	RPM	BHP	RPM	BHP	RPM	BHP
1200	1950	0.81	2077	0.97	2195	1.15	2307	1.33	2411	1.52
1300	1983	0.85	2108	1.02	2225	1.19	2336	1.38	2442	1.58
1400	2017	0.89	2140	1.06	2256	1.24	2367	1.43	—	—
1500	2053	0.93	2174	1.11	2289	1.29	2399	1.49	—	—
1600	2092	0.98	2210	1.16	2323	1.35	2431	1.55	—	—
1700	2132	1.04	2248	1.22	2359	1.41	—	—	—	—
1800	2173	1.10	2288	1.28	2397	1.47	—	—	—	—
1900	2217	1.16	2329	1.35	2436	1.54	—	—	—	—
2000	2262	1.23	2372	1.42	—	—	—	—	—	—

Standard Static 1120-1900 RPM, 0.72 Max BHP

Medium Static 1120-2170 RPM, 1.06 Max BHP

High Static 1120-2460 RPM, 1.53 Max BHP

50FC-A05 SINGLE PHASE – STANDARD STATIC — 4 TON VERTICAL SUPPLY (RPM - VDC)

CFM	AVAILABLE EXTERNAL STATIC PRESSURE (in. wg)									
	0.2		0.4		0.6		0.8		1.0	
	RPM	Vdc	RPM	Vdc	RPM	Vdc	RPM	Vdc	RPM	Vdc
1200	1120	5.9	1327	7.0	1506	7.9	1667	8.8	1814	9.5
1300	1178	6.2	1375	7.2	1549	8.2	1705	9.0	1849	9.7
1400	1238	6.5	1424	7.5	1593	8.4	1745	9.2	1886	9.9
1500	1300	6.8	1476	7.8	1639	8.6	1788	9.4	—	—
1600	1365	7.2	1530	8.1	1688	8.9	1832	9.6	—	—
1700	1430	7.5	1586	8.3	1737	9.1	1878	9.9	—	—
1800	1497	7.9	1644	8.7	1789	9.4	—	—	—	—
1900	1565	8.2	1703	9.0	1842	9.7	—	—	—	—
2000	1633	8.6	1764	9.3	1897	10.0	—	—	—	—

CFM	AVAILABLE EXTERNAL STATIC PRESSURE (in. wg)									
	1.2		1.4		1.6		1.8		2.0	
	RPM	Vdc	RPM	Vdc	RPM	Vdc	RPM	Vdc	RPM	Vdc
1200	—	—	—	—	—	—	—	—	—	—
1300	—	—	—	—	—	—	—	—	—	—
1400	—	—	—	—	—	—	—	—	—	—
1500	—	—	—	—	—	—	—	—	—	—
1600	—	—	—	—	—	—	—	—	—	—
1700	—	—	—	—	—	—	—	—	—	—
1800	—	—	—	—	—	—	—	—	—	—
1900	—	—	—	—	—	—	—	—	—	—
2000	—	—	—	—	—	—	—	—	—	—

Standard Static 1120-1900 RPM

50FC-A05 SINGLE PHASE – MEDIUM STATIC — 4 TON VERTICAL SUPPLY (RPM - VDC)

CFM	AVAILABLE EXTERNAL STATIC PRESSURE (in. wg)									
	0.2		0.4		0.6		0.8		1.0	
	RPM	Vdc	RPM	Vdc	RPM	Vdc	RPM	Vdc	RPM	Vdc
1200	1120	5.2	1327	6.1	1506	6.9	1667	7.7	1814	8.4
1300	1178	5.4	1375	6.3	1549	7.1	1705	7.9	1849	8.5
1400	1238	5.7	1424	6.6	1593	7.3	1745	8.0	1886	8.7
1500	1300	6.0	1476	6.8	1639	7.6	1788	8.2	1925	8.9
1600	1365	6.3	1530	7.1	1688	7.8	1832	8.4	1966	9.1
1700	1430	6.6	1586	7.3	1737	8.0	1878	8.7	2009	9.3
1800	1497	6.9	1644	7.6	1789	8.2	1925	8.9	2053	9.5
1900	1565	7.2	1703	7.8	1842	8.5	1974	9.1	2099	9.7
2000	1633	7.5	1764	8.1	1897	8.7	2025	9.3	2146	9.9

CFM	AVAILABLE EXTERNAL STATIC PRESSURE (in. wg)									
	1.2		1.4		1.6		1.8		2.0	
	RPM	Vdc	RPM	Vdc	RPM	Vdc	RPM	Vdc	RPM	Vdc
1200	1950	9.0	2077	9.6	—	—	—	—	—	—
1300	1983	9.1	2108	9.7	—	—	—	—	—	—
1400	2017	9.3	2140	9.9	—	—	—	—	—	—
1500	2053	9.5	—	—	—	—	—	—	—	—
1600	2092	9.6	—	—	—	—	—	—	—	—
1700	2132	9.8	—	—	—	—	—	—	—	—
1800	—	—	—	—	—	—	—	—	—	—
1900	—	—	—	—	—	—	—	—	—	—
2000	—	—	—	—	—	—	—	—	—	—

Medium Static 1120-2170 RPM

50FC-A05 SINGLE PHASE – HIGH STATIC — 4 TON VERTICAL SUPPLY (RPM - VDC)

CFM	AVAILABLE EXTERNAL STATIC PRESSURE (in. wg)									
	0.2		0.4		0.6		0.8		1.0	
	RPM	Vdc	RPM	Vdc	RPM	Vdc	RPM	Vdc	RPM	Vdc
1200	1120	4.6	1327	5.4	1506	6.1	1667	6.8	1814	7.4
1300	1178	4.8	1375	5.6	1549	6.3	1705	6.9	1849	7.5
1400	1238	5.0	1424	5.8	1593	6.5	1745	7.1	1886	7.7
1500	1300	5.3	1476	6.0	1639	6.7	1788	7.3	1925	7.8
1600	1365	5.5	1530	6.2	1688	6.9	1832	7.4	1966	8.0
1700	1430	5.8	1586	6.4	1737	7.1	1878	7.6	2009	8.2
1800	1497	6.1	1644	6.7	1789	7.3	1925	7.8	2053	8.3
1900	1565	6.4	1703	6.9	1842	7.5	1974	8.0	2099	8.5
2000	1633	6.6	1764	7.2	1897	7.7	2025	8.2	2146	8.7

CFM	AVAILABLE EXTERNAL STATIC PRESSURE (in. wg)									
	1.2		1.4		1.6		1.8		2.0	
	RPM	Vdc	RPM	Vdc	RPM	Vdc	RPM	Vdc	RPM	Vdc
1200	1950	7.9	2077	8.4	2195	8.9	2307	9.4	2411	9.8
1300	1983	8.1	2108	8.6	2225	9.0	2336	9.5	2442	9.9
1400	2017	8.2	2140	8.7	2256	9.2	2367	9.6	—	—
1500	2053	8.3	2174	8.8	2289	9.3	2399	9.8	—	—
1600	2092	8.5	2210	9.0	2323	9.4	2431	9.9	—	—
1700	2132	8.7	2248	9.1	2359	9.6	—	—	—	—
1800	2173	8.8	2288	9.3	2397	9.7	—	—	—	—
1900	2217	9.0	2329	9.5	2436	9.9	—	—	—	—
2000	2262	9.2	2372	9.6	—	—	—	—	—	—

High Static 1120-2460 RPM

50FC-A05 THREE PHASE — 4 TON VERTICAL SUPPLY (RPM - BHP)

CFM	AVAILABLE EXTERNAL STATIC PRESSURE (in. wg)									
	0.2		0.4		0.6		0.8		1.0	
	RPM	BHP	RPM	BHP	RPM	BHP	RPM	BHP	RPM	BHP
1200	1115	0.15	1332	0.26	1513	0.37	1665	0.50	1801	0.63
1300	1174	0.17	1376	0.28	1557	0.41	1709	0.54	1843	0.67
1400	1236	0.20	1422	0.31	1601	0.44	1754	0.58	1887	0.72
1500	1300	0.24	1471	0.34	1644	0.48	1798	0.62	1932	0.77
1600	1366	0.27	1524	0.38	1688	0.51	1841	0.67	1976	0.82
1700	1433	0.31	1579	0.42	1734	0.56	1884	0.71	2020	0.88
1800	1501	0.36	1637	0.47	1783	0.60	1928	0.76	2063	0.93
1900	1570	0.41	1698	0.52	1834	0.66	1973	0.82	2106	0.99
2000	1640	0.47	1761	0.58	1888	0.71	2020	0.88	2150	1.06

CFM	AVAILABLE EXTERNAL STATIC PRESSURE (in. wg)									
	1.2		1.4		1.6		1.8		2.0	
	RPM	BHP	RPM	BHP	RPM	BHP	RPM	BHP	RPM	BHP
1200	1931	0.78	2061	0.95	2200	1.15	2363	1.43	2617	1.94
1300	1967	0.82	2087	0.98	2207	1.16	2332	1.37	2471	1.62
1400	2009	0.87	2123	1.03	2234	1.20	2345	1.38	2460	1.60
1500	2052	0.93	2164	1.09	2271	1.25	2375	1.43	2478	1.63
1600	2097	0.99	2208	1.15	2312	1.32	2412	1.50	2510	1.69
1700	2141	1.05	2252	1.22	2356	1.39	2454	1.58	2548	1.76
1800	2185	1.11	2297	1.29	2400	1.47	2497	1.66	2590	1.85
1900	2229	1.18	2341	1.36	2445	1.55	2542	1.75	2634	1.94
2000	2272	1.25	2385	1.44	2489	1.64	2586	1.84	—	—

Standard Static 1115-1900 RPM, 0.72 Max BHP

Medium Static 1115-2170 RPM, 1.06 Max BHP

High Static 1115-2660 RPM, 1.96 Max BHP

50FC-A05 THREE PHASE – STANDARD STATIC — 4 TON VERTICAL SUPPLY (RPM - VDC)

CFM	AVAILABLE EXTERNAL STATIC PRESSURE (in. wg)									
	0.2		0.4		0.6		0.8		1.0	
	RPM	Vdc	RPM	Vdc	RPM	Vdc	RPM	Vdc	RPM	Vdc
1200	1115	5.9	1332	7.0	1513	8.0	1665	8.8	1801	9.5
1300	1174	6.2	1376	7.2	1557	8.2	1709	9.0	1843	9.7
1400	1236	6.5	1422	7.5	1601	8.4	1754	9.2	1887	9.9
1500	1300	6.8	1471	7.7	1644	8.7	1798	9.5	—	—
1600	1366	7.2	1524	8.0	1688	8.9	1841	9.7	—	—
1700	1433	7.5	1579	8.3	1734	9.1	1884	9.9	—	—
1800	1501	7.9	1637	8.6	1783	9.4	—	—	—	—
1900	1570	8.3	1698	8.9	1834	9.7	—	—	—	—
2000	1640	8.6	1761	9.3	1888	9.9	—	—	—	—

CFM	AVAILABLE EXTERNAL STATIC PRESSURE (in. wg)									
	1.2		1.4		1.6		1.8		2.0	
	RPM	Vdc	RPM	Vdc	RPM	Vdc	RPM	Vdc	RPM	Vdc
1200	—	—	—	—	—	—	—	—	—	—
1300	—	—	—	—	—	—	—	—	—	—
1400	—	—	—	—	—	—	—	—	—	—
1500	—	—	—	—	—	—	—	—	—	—
1600	—	—	—	—	—	—	—	—	—	—
1700	—	—	—	—	—	—	—	—	—	—
1800	—	—	—	—	—	—	—	—	—	—
1900	—	—	—	—	—	—	—	—	—	—
2000	—	—	—	—	—	—	—	—	—	—

Standard Static 1115-1900 RPM

Fan data (cont)

50FC-A05 THREE PHASE – MEDIUM STATIC — 4 TON VERTICAL SUPPLY (RPM - VDC)

CFM	AVAILABLE EXTERNAL STATIC PRESSURE (in. wg)									
	0.2		0.4		0.6		0.8		1.0	
	RPM	Vdc	RPM	Vdc	RPM	Vdc	RPM	Vdc	RPM	Vdc
1200	1115	5.1	1332	6.1	1513	7.0	1665	7.7	1801	8.3
1300	1174	5.4	1376	6.3	1557	7.2	1709	7.9	1843	8.5
1400	1236	5.7	1422	6.6	1601	7.4	1754	8.1	1887	8.7
1500	1300	6.0	1471	6.8	1644	7.6	1798	8.3	1932	8.9
1600	1366	6.3	1524	7.0	1688	7.8	1841	8.5	1976	9.1
1700	1433	6.6	1579	7.3	1734	8.0	1884	8.7	2020	9.3
1800	1501	6.9	1637	7.5	1783	8.2	1928	8.9	2063	9.5
1900	1570	7.2	1698	7.8	1834	8.5	1973	9.1	2106	9.7
2000	1640	7.6	1761	8.1	1888	8.7	2020	9.3	2150	9.9

CFM	AVAILABLE EXTERNAL STATIC PRESSURE (in. wg)									
	1.2		1.4		1.6		1.8		2.0	
	RPM	Vdc	RPM	Vdc	RPM	Vdc	RPM	Vdc	RPM	Vdc
1200	1931	8.9	2061	9.5	—	—	—	—	—	—
1300	1967	9.1	2087	9.6	—	—	—	—	—	—
1400	2009	9.3	2123	9.8	—	—	—	—	—	—
1500	2052	9.5	—	—	—	—	—	—	—	—
1600	2097	9.7	—	—	—	—	—	—	—	—
1700	2141	9.9	—	—	—	—	—	—	—	—
1800	—	—	—	—	—	—	—	—	—	—
1900	—	—	—	—	—	—	—	—	—	—
2000	—	—	—	—	—	—	—	—	—	—

Medium Static 1115-2170 RPM

50FC-A05 THREE PHASE – HIGH STATIC — 4 TON VERTICAL SUPPLY (RPM - VDC)

CFM	AVAILABLE EXTERNAL STATIC PRESSURE (in. wg)									
	0.2		0.4		0.6		0.8		1.0	
	RPM	Vdc	RPM	Vdc	RPM	Vdc	RPM	Vdc	RPM	Vdc
1200	1115	4.2	1332	5.0	1513	5.7	1665	6.3	1801	6.8
1300	1174	4.4	1376	5.2	1557	5.9	1709	6.4	1843	6.9
1400	1236	4.6	1422	5.3	1601	6.0	1754	6.6	1887	7.1
1500	1300	4.9	1471	5.5	1644	6.2	1798	6.8	1932	7.3
1600	1366	5.1	1524	5.7	1688	6.3	1841	6.9	1976	7.4
1700	1433	5.4	1579	5.9	1734	6.5	1884	7.1	2020	7.6
1800	1501	5.6	1637	6.2	1783	6.7	1928	7.2	2063	7.8
1900	1570	5.9	1698	6.4	1834	6.9	1973	7.4	2106	7.9
2000	1640	6.2	1761	6.6	1888	7.1	2020	7.6	2150	8.1

CFM	AVAILABLE EXTERNAL STATIC PRESSURE (in. wg)									
	1.2		1.4		1.6		1.8		2.0	
	RPM	Vdc	RPM	Vdc	RPM	Vdc	RPM	Vdc	RPM	Vdc
1200	1931	7.3	2061	7.7	2200	8.3	2363	8.9	2617	9.8
1300	1967	7.4	2087	7.8	2207	8.3	2332	8.8	2471	9.3
1400	2009	7.6	2123	8.0	2234	8.4	2345	8.8	2460	9.2
1500	2052	7.7	2164	8.1	2271	8.5	2375	8.9	2478	9.3
1600	2097	7.9	2208	8.3	2312	8.7	2412	9.1	2510	9.4
1700	2141	8.0	2252	8.5	2356	8.9	2454	9.2	2548	9.6
1800	2185	8.2	2297	8.6	2400	9.0	2497	9.4	2590	9.7
1900	2229	8.4	2341	8.8	2445	9.2	2542	9.6	2634	9.9
2000	2272	8.5	2385	9.0	2489	9.4	2586	9.7	—	—

High Static 1115-2660 RPM

50FC-A06 SINGLE PHASE — 5 TON VERTICAL SUPPLY (RPM - BHP)

CFM	AVAILABLE EXTERNAL STATIC PRESSURE (in. wg)									
	0.2		0.4		0.6		0.8		1.0	
	RPM	BHP	RPM	BHP	RPM	BHP	RPM	BHP	RPM	BHP
1500	1301	0.24	1476	0.35	1639	0.47	1788	0.62	1925	0.77
1625	1381	0.28	1545	0.40	1700	0.53	1843	0.67	1976	0.83
1750	1463	0.34	1615	0.45	1763	0.59	1901	0.74	2031	0.90
1875	1548	0.40	1688	0.51	1828	0.65	1962	0.81	2087	0.97
2000	1633	0.46	1764	0.59	1897	0.73	2025	0.89	2146	1.05
2125	1720	0.54	1842	0.67	1967	0.81	2090	0.97	2208	1.15
2250	1808	0.63	1922	0.75	2040	0.90	2157	1.07	2271	1.24
2375	1897	0.72	2003	0.85	2115	1.00	2227	1.17	2336	1.35
2500	1987	0.83	2086	0.96	2191	1.11	2298	1.28	—	—

CFM	AVAILABLE EXTERNAL STATIC PRESSURE (in. wg)									
	1.2		1.4		1.6		1.8		2.0	
	RPM	BHP	RPM	BHP	RPM	BHP	RPM	BHP	RPM	BHP
1500	2053	0.93	2174	1.11	2289	1.29	—	—	—	—
1625	2101	1.00	2220	1.18	2332	1.36	—	—	—	—
1750	2152	1.07	2268	1.25	2378	1.44	—	—	—	—
1875	2206	1.15	2318	1.33	—	—	—	—	—	—
2000	2262	1.23	2372	1.42	—	—	—	—	—	—
2125	2320	1.33	—	—	—	—	—	—	—	—
2250	2380	1.43	—	—	—	—	—	—	—	—
2375	—	—	—	—	—	—	—	—	—	—
2500	—	—	—	—	—	—	—	—	—	—

Standard Static 1301-2150 RPM, 1.06 Max BHP

Medium Static 1301-2390 RPM, 1.44 Max BHP

50FC-A06 SINGLE PHASE – STANDARD STATIC — 5 TON VERTICAL SUPPLY (RPM - VDC)

CFM	AVAILABLE EXTERNAL STATIC PRESSURE (in. wg)									
	0.2		0.4		0.6		0.8		1.0	
	RPM	Vdc	RPM	Vdc	RPM	Vdc	RPM	Vdc	RPM	Vdc
1500	1301	6.1	1476	6.9	1639	7.6	1788	8.3	1925	9.0
1625	1381	6.4	1545	7.2	1700	7.9	1843	8.6	1976	9.2
1750	1463	6.8	1615	7.5	1763	8.2	1901	8.8	2031	9.4
1875	1548	7.2	1688	7.9	1828	8.5	1962	9.1	2087	9.7
2000	1633	7.6	1764	8.2	1897	8.8	2025	9.4	2146	10.0
2125	1720	8.0	1842	8.6	1967	9.1	2090	9.7	—	—
2250	1808	8.4	1922	8.9	2040	9.5	—	—	—	—
2375	1897	8.8	2003	9.3	2115	9.8	—	—	—	—
2500	1987	9.2	2086	9.7	—	—	—	—	—	—

CFM	AVAILABLE EXTERNAL STATIC PRESSURE (in. wg)									
	1.2		1.4		1.6		1.8		2.0	
	RPM	Vdc	RPM	Vdc	RPM	Vdc	RPM	Vdc	RPM	Vdc
1500	2053	9.5	—	—	—	—	—	—	—	—
1625	2101	9.8	—	—	—	—	—	—	—	—
1750	—	—	—	—	—	—	—	—	—	—
1875	—	—	—	—	—	—	—	—	—	—
2000	—	—	—	—	—	—	—	—	—	—
2125	—	—	—	—	—	—	—	—	—	—
2250	—	—	—	—	—	—	—	—	—	—
2375	—	—	—	—	—	—	—	—	—	—
2500	—	—	—	—	—	—	—	—	—	—

Standard Static 1301-2150 RPM

Fan data (cont)

50FC-A06 SINGLE PHASE – MEDIUM STATIC — 3 TON VERTICAL SUPPLY (RPM - VDC)

CFM	AVAILABLE EXTERNAL STATIC PRESSURE (in. wg)									
	0.2		0.4		0.6		0.8		1.0	
	RPM	Vdc	RPM	Vdc	RPM	Vdc	RPM	Vdc	RPM	Vdc
1500	1301	5.4	1476	6.2	1639	6.9	1788	7.5	1925	8.1
1625	1381	5.8	1545	6.5	1700	7.1	1843	7.7	1976	8.3
1750	1463	6.1	1615	6.8	1763	7.4	1901	8.0	2031	8.5
1875	1548	6.5	1688	7.1	1828	7.6	1962	8.2	2087	8.7
2000	1633	6.8	1764	7.4	1897	7.9	2025	8.5	2146	9.0
2125	1720	7.2	1842	7.7	1967	8.2	2090	8.7	2208	9.2
2250	1808	7.6	1922	8.0	2040	8.5	2157	9.0	2271	9.5
2375	1897	7.9	2003	8.4	2115	8.8	2227	9.3	2336	9.8
2500	1987	8.3	2086	8.7	2191	9.2	2298	9.6	—	—

CFM	AVAILABLE EXTERNAL STATIC PRESSURE (in. wg)									
	1.2		1.4		1.6		1.8		2.0	
	RPM	Vdc	RPM	Vdc	RPM	Vdc	RPM	Vdc	RPM	Vdc
1500	2053	8.6	2174	9.1	2289	9.6	—	—	—	—
1625	2101	8.8	2220	9.3	2332	9.8	—	—	—	—
1750	2152	9.0	2268	9.5	2378	9.9	—	—	—	—
1875	2206	9.2	2318	9.7	—	—	—	—	—	—
2000	2262	9.5	2372	9.9	—	—	—	—	—	—
2125	2320	9.7	—	—	—	—	—	—	—	—
2250	2380	10.0	—	—	—	—	—	—	—	—
2375	—	—	—	—	—	—	—	—	—	—
2500	—	—	—	—	—	—	—	—	—	—

Medium Static 1301-2390 RPM

50FC-A06 THREE PHASE — 5 TON VERTICAL SUPPLY (RPM - BHP)

CFM	AVAILABLE EXTERNAL STATIC PRESSURE (in. wg)									
	0.2		0.4		0.6		0.8		1.0	
	RPM	BHP	RPM	BHP	RPM	BHP	RPM	BHP	RPM	BHP
1500	1301	0.24	1477	0.35	1639	0.47	1788	0.62	1925	0.77
1625	1381	0.28	1545	0.40	1700	0.53	1843	0.67	1977	0.83
1750	1463	0.34	1615	0.45	1763	0.59	1902	0.74	2031	0.90
1875	1548	0.40	1688	0.51	1829	0.65	1962	0.81	2088	0.97
2000	1633	0.46	1764	0.59	1897	0.73	2025	0.89	2147	1.06
2125	1720	0.54	1842	0.67	1968	0.81	2090	0.97	2208	1.15
2250	1809	0.63	1922	0.75	2040	0.90	2158	1.07	2271	1.24
2375	1897	0.72	2003	0.85	2115	1.00	2227	1.17	2336	1.35
2500	1987	0.83	2086	0.96	2192	1.12	2299	1.29	2403	1.47

CFM	AVAILABLE EXTERNAL STATIC PRESSURE (in. wg)									
	1.2		1.4		1.6		1.8		2.0	
	RPM	BHP	RPM	BHP	RPM	BHP	RPM	BHP	RPM	BHP
1500	2053	0.93	2174	1.11	2289	1.29	2398	1.49	2502	1.69
1625	2102	1.00	2220	1.18	2332	1.36	2439	1.56	2542	1.77
1750	2153	1.07	2268	1.25	2378	1.44	2483	1.64	2584	1.85
1875	2206	1.15	2319	1.33	2426	1.53	2529	1.73	2628	1.94
2000	2262	1.23	2372	1.42	2477	1.62	2578	1.83	2675	2.04
2125	2320	1.33	2427	1.52	2530	1.72	2629	1.93	2724	2.15
2250	2380	1.43	2485	1.63	2585	1.83	2682	2.05	2775	2.27
2375	2443	1.55	2544	1.75	2642	1.96	2737	2.17	2828	2.40
2500	2506	1.67	2605	1.87	2701	2.09	2794	2.31	—	—

Standard Static 1301-2150 RPM, 1.06 Max BHP

Medium Static 1301-2390 RPM, 1.44 Max BHP

High Static 1301-2836 RPM, 2.43 Max BHP

50FC-A06 THREE PHASE – STANDARD STATIC — 5 TON VERTICAL SUPPLY (RPM - VDC)

CFM	AVAILABLE EXTERNAL STATIC PRESSURE (in. wg)									
	0.2		0.4		0.6		0.8		1.0	
	RPM	Vdc	RPM	Vdc	RPM	Vdc	RPM	Vdc	RPM	Vdc
1500	1301	6.1	1477	6.9	1639	7.6	1788	8.3	1925	9.0
1625	1381	6.4	1545	7.2	1700	7.9	1843	8.6	1977	9.2
1750	1463	6.8	1615	7.5	1763	8.2	1902	8.8	2031	9.4
1875	1548	7.2	1688	7.9	1829	8.5	1962	9.1	2088	9.7
2000	1633	7.6	1764	8.2	1897	8.8	2025	9.4	2147	10.0
2125	1720	8.0	1842	8.6	1968	9.2	2090	9.7	—	—
2250	1809	8.4	1922	8.9	2040	9.5	—	—	—	—
2375	1897	8.8	2003	9.3	2115	9.8	—	—	—	—
2500	1987	9.2	2086	9.7	—	—	—	—	—	—

CFM	AVAILABLE EXTERNAL STATIC PRESSURE (in. wg)									
	1.2		1.4		1.6		1.8		2.0	
	RPM	Vdc	RPM	Vdc	RPM	Vdc	RPM	Vdc	RPM	Vdc
1500	2053	9.5	—	—	—	—	—	—	—	—
1625	2102	9.8	—	—	—	—	—	—	—	—
1750	—	—	—	—	—	—	—	—	—	—
1875	—	—	—	—	—	—	—	—	—	—
2000	—	—	—	—	—	—	—	—	—	—
2125	—	—	—	—	—	—	—	—	—	—
2250	—	—	—	—	—	—	—	—	—	—
2375	—	—	—	—	—	—	—	—	—	—
2500	—	—	—	—	—	—	—	—	—	—

Standard Static 1301-2150 RPM

50FC-A06 THREE PHASE – MEDIUM STATIC — 5 TON VERTICAL SUPPLY (RPM - VDC)

CFM	AVAILABLE EXTERNAL STATIC PRESSURE (in. wg)									
	0.2		0.4		0.6		0.8		1.0	
	RPM	Vdc	RPM	Vdc	RPM	Vdc	RPM	Vdc	RPM	Vdc
1500	1301	5.4	1477	6.2	1639	6.9	1788	7.5	1925	8.1
1625	1381	5.8	1545	6.5	1700	7.1	1843	7.7	1977	8.3
1750	1463	6.1	1615	6.8	1763	7.4	1902	8.0	2031	8.5
1875	1548	6.5	1688	7.1	1829	7.7	1962	8.2	2088	8.7
2000	1633	6.8	1764	7.4	1897	7.9	2025	8.5	2147	9.0
2125	1720	7.2	1842	7.7	1968	8.2	2090	8.7	2208	9.2
2250	1809	7.6	1922	8.0	2040	8.5	2158	9.0	2271	9.5
2375	1897	7.9	2003	8.4	2115	8.8	2227	9.3	2336	9.8
2500	1987	8.3	2086	8.7	2192	9.2	2299	9.6	—	—

CFM	AVAILABLE EXTERNAL STATIC PRESSURE (in. wg)									
	1.2		1.4		1.6		1.8		2.0	
	RPM	Vdc	RPM	Vdc	RPM	Vdc	RPM	Vdc	RPM	Vdc
1500	2053	8.6	2174	9.1	2289	9.6	—	—	—	—
1625	2102	8.8	2220	9.3	2332	9.8	—	—	—	—
1750	2153	9.0	2268	9.5	2378	9.9	—	—	—	—
1875	2206	9.2	2319	9.7	—	—	—	—	—	—
2000	2262	9.5	2372	9.9	—	—	—	—	—	—
2125	2320	9.7	—	—	—	—	—	—	—	—
2250	2380	10.0	—	—	—	—	—	—	—	—
2375	—	—	—	—	—	—	—	—	—	—
2500	—	—	—	—	—	—	—	—	—	—

Medium Static 1301-2390 RPM

50FC-A06 THREE PHASE – HIGH STATIC — 5 TON VERTICAL SUPPLY (RPM - VDC)

CFM	AVAILABLE EXTERNAL STATIC PRESSURE (in. wg)									
	0.2		0.4		0.6		0.8		1.0	
	RPM	Vdc	RPM	Vdc	RPM	Vdc	RPM	Vdc	RPM	Vdc
1500	1301	4.6	1477	5.2	1639	5.8	1788	6.3	1925	6.8
1625	1381	4.9	1545	5.4	1700	6.0	1843	6.5	1977	7.0
1750	1463	5.2	1615	5.7	1763	6.2	1902	6.7	2031	7.2
1875	1548	5.5	1688	6.0	1829	6.4	1962	6.9	2088	7.4
2000	1633	5.8	1764	6.2	1897	6.7	2025	7.1	2147	7.6
2125	1720	6.1	1842	6.5	1968	6.9	2090	7.4	2208	7.8
2250	1809	6.4	1922	6.8	2040	7.2	2158	7.6	2271	8.0
2375	1897	6.7	2003	7.1	2115	7.5	2227	7.9	2336	8.2
2500	1987	7.0	2086	7.4	2192	7.7	2299	8.1	2403	8.5

CFM	AVAILABLE EXTERNAL STATIC PRESSURE (in. wg)									
	1.2		1.4		1.6		1.8		2.0	
	RPM	Vdc	RPM	Vdc	RPM	Vdc	RPM	Vdc	RPM	Vdc
1500	2053	7.2	2174	7.7	2289	8.1	2398	8.5	2502	8.8
1625	2102	7.4	2220	7.8	2332	8.2	2439	8.6	2542	9.0
1750	2153	7.6	2268	8.0	2378	8.4	2483	8.8	2584	9.1
1875	2206	7.8	2319	8.2	2426	8.6	2529	8.9	2628	9.3
2000	2262	8.0	2372	8.4	2477	8.7	2578	9.1	2675	9.4
2125	2320	8.2	2427	8.6	2530	8.9	2629	9.3	2724	9.6
2250	2380	8.4	2485	8.8	2585	9.1	2682	9.5	2775	9.8
2375	2443	8.6	2544	9.0	2642	9.3	2737	9.7	2828	10.0
2500	2506	8.8	2605	9.2	2701	9.5	2794	9.9	—	—

High Static 1301-2836 RPM

50FC-M07 THREE PHASE — 6 TON VERTICAL SUPPLY (RPM - BHP)

CFM	AVAILABLE EXTERNAL STATIC PRESSURE (in. wg)									
	0.2		0.4		0.6		0.8		1.0	
	RPM	BHP	RPM	BHP	RPM	BHP	RPM	BHP	RPM	BHP
1800	1423	0.30	1550	0.39	1682	0.50	1820	0.64	1955	0.79
1950	1521	0.37	1638	0.46	1758	0.57	1883	0.70	2011	0.86
2100	1620	0.45	1730	0.54	1839	0.65	1953	0.78	2071	0.93
2250	1720	0.53	1824	0.64	1924	0.75	2029	0.88	2137	1.02
2400	1820	0.63	1919	0.74	2013	0.85	2109	0.98	2209	1.13
2550	1921	0.74	2016	0.86	2105	0.98	2194	1.11	2286	1.25
2700	2022	0.86	2113	0.99	2198	1.11	2282	1.24	2368	1.39
2850	2123	1.00	2212	1.13	2293	1.26	2373	1.40	2453	1.54
3000	2225	1.15	2311	1.29	2389	1.42	2465	1.56	2541	1.71

CFM	AVAILABLE EXTERNAL STATIC PRESSURE (in. wg)									
	1.2		1.4		1.6		1.8		2.0	
	RPM	BHP	RPM	BHP	RPM	BHP	RPM	BHP	RPM	BHP
1800	2079	0.95	2192	1.11	2296	1.28	2393	1.45	2485	1.62
1950	2133	1.02	2247	1.19	2353	1.37	2451	1.55	2543	1.73
2100	2189	1.10	2301	1.28	2408	1.47	2507	1.66	2601	1.85
2250	2248	1.19	2357	1.37	2462	1.57	2562	1.76	2656	1.97
2400	2312	1.30	2416	1.48	2517	1.67	2616	1.88	2711	2.09
2550	2381	1.41	2479	1.60	2576	1.79	2672	2.00	2765	2.21
2700	2456	1.55	2546	1.73	2638	1.92	2730	2.13	2821	2.35
2850	2535	1.70	2619	1.88	2705	2.07	2793	2.28	—	—
3000	2618	1.87	2696	2.05	2777	2.24	—	—	—	—

Standard Static 1423-2300 RPM, 1.31 Max BHP

Medium Static 1423-2530 RPM, 1.76 Max BHP

High Static 1423-2836 RPM, 2.43 Max BHP

50FC-M07 THREE PHASE – STANDARD STATIC — 6 TON VERTICAL SUPPLY (RPM - VDC)

CFM	AVAILABLE EXTERNAL STATIC PRESSURE (in. wg)									
	0.2		0.4		0.6		0.8		1.0	
	RPM	Vdc	RPM	Vdc	RPM	Vdc	RPM	Vdc	RPM	Vdc
1800	1423	6.2	1550	6.7	1682	7.3	1820	7.9	1955	8.5
1950	1521	6.6	1638	7.1	1758	7.6	1883	8.2	2011	8.7
2100	1620	7.0	1730	7.5	1839	8.0	1953	8.5	2071	9.0
2250	1720	7.5	1824	7.9	1924	8.4	2029	8.8	2137	9.3
2400	1820	7.9	1919	8.3	2013	8.8	2109	9.2	2209	9.6
2550	1921	8.4	2016	8.8	2105	9.2	2194	9.5	2286	9.9
2700	2022	8.8	2113	9.2	2198	9.6	2282	9.9	—	—
2850	2123	9.2	2212	9.6	2293	10.0	—	—	—	—
3000	2225	9.7	—	—	—	—	—	—	—	—

CFM	AVAILABLE EXTERNAL STATIC PRESSURE (in. wg)									
	1.2		1.4		1.6		1.8		2.0	
	RPM	Vdc	RPM	Vdc	RPM	Vdc	RPM	Vdc	RPM	Vdc
1800	2079	9.0	2192	9.5	2296	10.0	—	—	—	—
1950	2133	9.3	2247	9.8	—	—	—	—	—	—
2100	2189	9.5	—	—	—	—	—	—	—	—
2250	2248	9.8	—	—	—	—	—	—	—	—
2400	—	—	—	—	—	—	—	—	—	—
2550	—	—	—	—	—	—	—	—	—	—
2700	—	—	—	—	—	—	—	—	—	—
2850	—	—	—	—	—	—	—	—	—	—
3000	—	—	—	—	—	—	—	—	—	—

Standard Static 1423-2300 RPM

Fan data (cont)

50FC-M07 THREE PHASE – MEDIUM STATIC — 6 TON VERTICAL SUPPLY (RPM - VDC)

CFM	AVAILABLE EXTERNAL STATIC PRESSURE (in. wg)									
	0.2		0.4		0.6		0.8		1.0	
	RPM	Vdc	RPM	Vdc	RPM	Vdc	RPM	Vdc	RPM	Vdc
1800	1423	5.6	1550	6.1	1682	6.6	1820	7.2	1955	7.7
1950	1521	6.0	1638	6.5	1758	6.9	1883	7.4	2011	7.9
2100	1620	6.4	1730	6.8	1839	7.3	1953	7.7	2071	8.2
2250	1720	6.8	1824	7.2	1924	7.6	2029	8.0	2137	8.4
2400	1820	7.2	1919	7.6	2013	8.0	2109	8.3	2209	8.7
2550	1921	7.6	2016	8.0	2105	8.3	2194	8.7	2286	9.0
2700	2022	8.0	2113	8.4	2198	8.7	2282	9.0	2368	9.4
2850	2123	8.4	2212	8.7	2293	9.1	2373	9.4	2453	9.7
3000	2225	8.8	2311	9.1	2389	9.4	2465	9.7	—	—

CFM	AVAILABLE EXTERNAL STATIC PRESSURE (in. wg)									
	1.2		1.4		1.6		1.8		2.0	
	RPM	Vdc	RPM	Vdc	RPM	Vdc	RPM	Vdc	RPM	Vdc
1800	2079	8.2	2192	8.7	2296	9.1	2393	9.5	2485	9.8
1950	2133	8.4	2247	8.9	2353	9.3	2451	9.7	—	—
2100	2189	8.7	2301	9.1	2408	9.5	2507	9.9	—	—
2250	2248	8.9	2357	9.3	2462	9.7	—	—	—	—
2400	2312	9.1	2416	9.5	2517	9.9	—	—	—	—
2550	2381	9.4	2479	9.8	—	—	—	—	—	—
2700	2456	9.7	—	—	—	—	—	—	—	—
2850	—	—	—	—	—	—	—	—	—	—
3000	—	—	—	—	—	—	—	—	—	—

Medium Static 1423-2530 RPM

50FC-M07 THREE PHASE – HIGH STATIC — 6 TON VERTICAL SUPPLY (RPM - VDC)

CFM	AVAILABLE EXTERNAL STATIC PRESSURE (in. wg)									
	0.2		0.4		0.6		0.8		1.0	
	RPM	Vdc	RPM	Vdc	RPM	Vdc	RPM	Vdc	RPM	Vdc
1800	1423	5.0	1550	5.5	1682	5.9	1820	6.4	1955	6.9
1950	1521	5.4	1638	5.8	1758	6.2	1883	6.6	2011	7.1
2100	1620	5.7	1730	6.1	1839	6.5	1953	6.9	2071	7.3
2250	1720	6.1	1824	6.4	1924	6.8	2029	7.2	2137	7.5
2400	1820	6.4	1919	6.8	2013	7.1	2109	7.4	2209	7.8
2550	1921	6.8	2016	7.1	2105	7.4	2194	7.7	2286	8.1
2700	2022	7.1	2113	7.5	2198	7.8	2282	8.0	2368	8.3
2850	2123	7.5	2212	7.8	2293	8.1	2373	8.4	2453	8.6
3000	2225	7.8	2311	8.1	2389	8.4	2465	8.7	2541	9.0

CFM	AVAILABLE EXTERNAL STATIC PRESSURE (in. wg)									
	1.2		1.4		1.6		1.8		2.0	
	RPM	Vdc	RPM	Vdc	RPM	Vdc	RPM	Vdc	RPM	Vdc
1800	2079	7.3	2192	7.7	2296	8.1	2393	8.4	2485	8.8
1950	2133	7.5	2247	7.9	2353	8.3	2451	8.6	2543	9.0
2100	2189	7.7	2301	8.1	2408	8.5	2507	8.8	2601	9.2
2250	2248	7.9	2357	8.3	2462	8.7	2562	9.0	2656	9.4
2400	2312	8.2	2416	8.5	2517	8.9	2616	9.2	2711	9.6
2550	2381	8.4	2479	8.7	2576	9.1	2672	9.4	2765	9.7
2700	2456	8.7	2546	9.0	2638	9.3	2730	9.6	2821	9.9
2850	2535	8.9	2619	9.2	2705	9.5	2793	9.8	—	—
3000	2618	9.2	2696	9.5	2777	9.8	—	—	—	—

High Static 1423-2836 RPM

50FC-A04 SINGLE PHASE — 3 TON HORIZONTAL SUPPLY (RPM - BHP)

CFM	AVAILABLE EXTERNAL STATIC PRESSURE (in. wg)									
	0.2		0.4		0.6		0.8		1.0	
	RPM	BHP	RPM	BHP	RPM	BHP	RPM	BHP	RPM	BHP
900	1017	0.07	1284	0.15	1501	0.24	1684	0.33	1843	0.44
975	1055	0.08	1311	0.16	1527	0.25	1711	0.35	1871	0.46
1050	1096	0.09	1340	0.17	1553	0.26	1737	0.36	1899	0.48
1125	1140	0.10	1371	0.18	1580	0.27	1763	0.38	1925	0.50
1200	1186	0.12	1404	0.19	1608	0.29	1789	0.40	1951	0.52
1275	1236	0.13	1440	0.21	1637	0.31	1816	0.42	1977	0.54
1350	1286	0.15	1477	0.22	1666	0.32	1843	0.44	2004	0.56
1425	1338	0.17	1517	0.24	1698	0.34	1871	0.46	2030	0.58
1500	1391	0.19	1559	0.26	1733	0.36	1900	0.48	2057	0.61

CFM	AVAILABLE EXTERNAL STATIC PRESSURE (in. wg)									
	1.2		1.4		1.6		1.8		2.0	
	RPM	BHP	RPM	BHP	RPM	BHP	RPM	BHP	RPM	BHP
900	1984	0.54	2113	0.66	2231	0.77	2342	0.89	2446	1.02
975	2014	0.57	2144	0.69	2264	0.81	2376	0.93	2481	1.06
1050	2043	0.59	2174	0.72	2295	0.84	2408	0.97	—	—
1125	2071	0.62	2203	0.74	2325	0.88	2439	1.01	—	—
1200	2098	0.64	2231	0.77	2354	0.91	2469	1.05	—	—
1275	2124	0.67	2258	0.80	2382	0.94	—	—	—	—
1350	2150	0.69	2285	0.83	2410	0.97	—	—	—	—
1425	2176	0.72	2311	0.86	2436	1.01	—	—	—	—
1500	2202	0.74	2337	0.89	2462	1.04	—	—	—	—

Standard Static 1017-1890 RPM, 0.44 Max BHP

Medium Static 1017-2190 RPM, 0.71 Max BHP

High Static 1017-2490 RPM, 1.07 Max BHP

50FC-A04 SINGLE PHASE – STANDARD STATIC — 3 TON HORIZONTAL SUPPLY (RPM - VDC)

CFM	AVAILABLE EXTERNAL STATIC PRESSURE (in. wg)									
	0.2		0.4		0.6		0.8		1.0	
	RPM	Vdc	RPM	Vdc	RPM	Vdc	RPM	Vdc	RPM	Vdc
900	1017	5.4	1284	6.8	1501	7.9	1684	8.9	1843	9.8
975	1055	5.6	1311	6.9	1527	8.1	1711	9.1	—	—
1050	1096	5.8	1340	7.1	1553	8.2	1737	9.2	—	—
1125	1140	6.0	1371	7.3	1580	8.4	1763	9.3	—	—
1200	1186	6.3	1404	7.4	1608	8.5	1789	9.5	—	—
1275	1236	6.5	1440	7.6	1637	8.7	1816	9.6	—	—
1350	1286	6.8	1477	7.8	1666	8.8	1843	9.8	—	—
1425	1338	7.1	1517	8.0	1698	9.0	—	—	—	—
1500	1391	7.4	1559	8.2	1733	9.2	—	—	—	—

CFM	AVAILABLE EXTERNAL STATIC PRESSURE (in. wg)									
	1.2		1.4		1.6		1.8		2.0	
	RPM	Vdc	RPM	Vdc	RPM	Vdc	RPM	Vdc	RPM	Vdc
900	—	—	—	—	—	—	—	—	—	—
975	—	—	—	—	—	—	—	—	—	—
1050	—	—	—	—	—	—	—	—	—	—
1125	—	—	—	—	—	—	—	—	—	—
1200	—	—	—	—	—	—	—	—	—	—
1275	—	—	—	—	—	—	—	—	—	—
1350	—	—	—	—	—	—	—	—	—	—
1425	—	—	—	—	—	—	—	—	—	—
1500	—	—	—	—	—	—	—	—	—	—

Standard Static 1017-1890 RPM

50FC-A04 SINGLE PHASE – MEDIUM STATIC — 3 TON HORIZONTAL SUPPLY (RPM - VDC)

CFM	AVAILABLE EXTERNAL STATIC PRESSURE (in. wg)									
	0.2		0.4		0.6		0.8		1.0	
	RPM	Vdc	RPM	Vdc	RPM	Vdc	RPM	Vdc	RPM	Vdc
900	1017	4.6	1284	5.9	1501	6.9	1684	7.7	1843	8.4
975	1055	4.8	1311	6.0	1527	7.0	1711	7.8	1871	8.5
1050	1096	5.0	1340	6.1	1553	7.1	1737	7.9	1899	8.7
1125	1140	5.2	1371	6.3	1580	7.2	1763	8.1	1925	8.8
1200	1186	5.4	1404	6.4	1608	7.3	1789	8.2	1951	8.9
1275	1236	5.6	1440	6.6	1637	7.5	1816	8.3	1977	9.0
1350	1286	5.9	1477	6.7	1666	7.6	1843	8.4	2004	9.2
1425	1338	6.1	1517	6.9	1698	7.8	1871	8.5	2030	9.3
1500	1391	6.4	1559	7.1	1733	7.9	1900	8.7	2057	9.4

CFM	AVAILABLE EXTERNAL STATIC PRESSURE (in. wg)									
	1.2		1.4		1.6		1.8		2.0	
	RPM	Vdc	RPM	Vdc	RPM	Vdc	RPM	Vdc	RPM	Vdc
900	1984	9.1	2113	9.6	—	—	—	—	—	—
975	2014	9.2	2144	9.8	—	—	—	—	—	—
1050	2043	9.3	—	—	—	—	—	—	—	—
1125	2071	9.5	—	—	—	—	—	—	—	—
1200	2098	9.6	—	—	—	—	—	—	—	—
1275	2124	9.7	—	—	—	—	—	—	—	—
1350	2150	9.8	—	—	—	—	—	—	—	—
1425	—	—	—	—	—	—	—	—	—	—
1500	—	—	—	—	—	—	—	—	—	—

Medium Static 1017-2190 RPM

50FC-A04 SINGLE PHASE – HIGH STATIC — 3 TON HORIZONTAL SUPPLY (RPM - VDC)

CFM	AVAILABLE EXTERNAL STATIC PRESSURE (in. wg)									
	0.2		0.4		0.6		0.8		1.0	
	RPM	Vdc	RPM	Vdc	RPM	Vdc	RPM	Vdc	RPM	Vdc
900	1017	4.1	1284	5.2	1501	6.0	1684	6.8	1843	7.4
975	1055	4.2	1311	5.3	1527	6.1	1711	6.9	1871	7.5
1050	1096	4.4	1340	5.4	1553	6.2	1737	7.0	1899	7.6
1125	1140	4.6	1371	5.5	1580	6.3	1763	7.1	1925	7.7
1200	1186	4.8	1404	5.6	1608	6.5	1789	7.2	1951	7.8
1275	1236	5.0	1440	5.8	1637	6.6	1816	7.3	1977	7.9
1350	1286	5.2	1477	5.9	1666	6.7	1843	7.4	2004	8.0
1425	1338	5.4	1517	6.1	1698	6.8	1871	7.5	2030	8.2
1500	1391	5.6	1559	6.3	1733	7.0	1900	7.6	2057	8.3

CFM	AVAILABLE EXTERNAL STATIC PRESSURE (in. wg)									
	1.2		1.4		1.6		1.8		2.0	
	RPM	Vdc	RPM	Vdc	RPM	Vdc	RPM	Vdc	RPM	Vdc
900	1984	8.0	2113	8.5	2231	9.0	2342	9.4	2446	9.8
975	2014	8.1	2144	8.6	2264	9.1	2376	9.5	2481	10.0
1050	2043	8.2	2174	8.7	2295	9.2	2408	9.7	—	—
1125	2071	8.3	2203	8.8	2325	9.3	2439	9.8	—	—
1200	2098	8.4	2231	9.0	2354	9.5	2469	9.9	—	—
1275	2124	8.5	2258	9.1	2382	9.6	—	—	—	—
1350	2150	8.6	2285	9.2	2410	9.7	—	—	—	—
1425	2176	8.7	2311	9.3	2436	9.8	—	—	—	—
1500	2202	8.8	2337	9.4	2462	9.9	—	—	—	—

High Static 1017-2490 RPM

50FC-A04 THREE PHASE — 3 TON HORIZONTAL SUPPLY (RPM - BHP)

CFM	AVAILABLE EXTERNAL STATIC PRESSURE (in. wg)									
	0.2		0.4		0.6		0.8		1.0	
	RPM	BHP	RPM	BHP	RPM	BHP	RPM	BHP	RPM	BHP
900	1017	0.07	1284	0.15	1501	0.24	1684	0.33	1843	0.44
975	1055	0.08	1311	0.16	1527	0.25	1711	0.35	1871	0.46
1050	1096	0.09	1340	0.17	1553	0.26	1737	0.36	1899	0.48
1125	1140	0.10	1371	0.18	1580	0.27	1763	0.38	1925	0.50
1200	1186	0.12	1404	0.19	1608	0.29	1789	0.40	1951	0.52
1275	1236	0.13	1440	0.21	1637	0.31	1816	0.42	1977	0.54
1350	1286	0.15	1477	0.22	1666	0.32	1843	0.44	2004	0.56
1425	1338	0.17	1517	0.24	1698	0.34	1871	0.46	2030	0.58
1500	1391	0.19	1559	0.26	1733	0.36	1900	0.48	2057	0.61

CFM	AVAILABLE EXTERNAL STATIC PRESSURE (in. wg)									
	1.2		1.4		1.6		1.8		2.0	
	RPM	BHP	RPM	BHP	RPM	BHP	RPM	BHP	RPM	BHP
900	1984	0.54	2113	0.66	2231	0.77	2342	0.89	2446	1.02
975	2014	0.57	2144	0.69	2264	0.81	2376	0.93	2481	1.06
1050	2043	0.59	2174	0.72	2295	0.84	2408	0.97	—	—
1125	2071	0.62	2203	0.74	2325	0.88	2439	1.01	—	—
1200	2098	0.64	2231	0.77	2354	0.91	2469	1.05	—	—
1275	2124	0.67	2258	0.80	2382	0.94	—	—	—	—
1350	2150	0.69	2285	0.83	2410	0.97	—	—	—	—
1425	2176	0.72	2311	0.86	2436	1.01	—	—	—	—
1500	2202	0.74	2337	0.89	2462	1.04	—	—	—	—

Standard Static 1017-1890 RPM, 0.44 Max BHP

Medium Static 1017-2190 RPM, 0.71 Max BHP

High Static 1017-2490 RPM, 1.07 Max BHP

50FC-A04 THREE PHASE – STANDARD STATIC — 3 TON HORIZONTAL SUPPLY (RPM - VDC)

CFM	AVAILABLE EXTERNAL STATIC PRESSURE (in. wg)									
	0.2		0.4		0.6		0.8		1.0	
	RPM	Vdc	RPM	Vdc	RPM	Vdc	RPM	Vdc	RPM	Vdc
900	1017	5.4	1284	6.8	1501	7.9	1684	8.9	1843	9.8
975	1055	5.6	1311	6.9	1527	8.1	1711	9.1	—	—
1050	1096	5.8	1340	7.1	1553	8.2	1737	9.2	—	—
1125	1140	6.0	1371	7.3	1580	8.4	1763	9.3	—	—
1200	1186	6.3	1404	7.4	1608	8.5	1789	9.5	—	—
1275	1236	6.5	1440	7.6	1637	8.7	1816	9.6	—	—
1350	1286	6.8	1477	7.8	1666	8.8	1843	9.8	—	—
1425	1338	7.1	1517	8.0	1698	9.0	—	—	—	—
1500	1391	7.4	1559	8.2	1733	9.2	—	—	—	—

CFM	AVAILABLE EXTERNAL STATIC PRESSURE (in. wg)									
	1.2		1.4		1.6		1.8		2.0	
	RPM	Vdc	RPM	Vdc	RPM	Vdc	RPM	Vdc	RPM	Vdc
900	—	—	—	—	—	—	—	—	—	—
975	—	—	—	—	—	—	—	—	—	—
1050	—	—	—	—	—	—	—	—	—	—
1125	—	—	—	—	—	—	—	—	—	—
1200	—	—	—	—	—	—	—	—	—	—
1275	—	—	—	—	—	—	—	—	—	—
1350	—	—	—	—	—	—	—	—	—	—
1425	—	—	—	—	—	—	—	—	—	—
1500	—	—	—	—	—	—	—	—	—	—

Standard Static 1017-1890 RPM

50FC-A04 THREE PHASE – MEDIUM STATIC — 3 TON HORIZONTAL SUPPLY (RPM - VDC)

CFM	AVAILABLE EXTERNAL STATIC PRESSURE (in. wg)									
	0.2		0.4		0.6		0.8		1.0	
	RPM	Vdc	RPM	Vdc	RPM	Vdc	RPM	Vdc	RPM	Vdc
900	1017	4.6	1284	5.9	1501	6.9	1684	7.7	1843	8.4
975	1055	4.8	1311	6.0	1527	7.0	1711	7.8	1871	8.5
1050	1096	5.0	1340	6.1	1553	7.1	1737	7.9	1899	8.7
1125	1140	5.2	1371	6.3	1580	7.2	1763	8.1	1925	8.8
1200	1186	5.4	1404	6.4	1608	7.3	1789	8.2	1951	8.9
1275	1236	5.6	1440	6.6	1637	7.5	1816	8.3	1977	9.0
1350	1286	5.9	1477	6.7	1666	7.6	1843	8.4	2004	9.2
1425	1338	6.1	1517	6.9	1698	7.8	1871	8.5	2030	9.3
1500	1391	6.4	1559	7.1	1733	7.9	1900	8.7	2057	9.4

CFM	AVAILABLE EXTERNAL STATIC PRESSURE (in. wg)									
	1.2		1.4		1.6		1.8		2.0	
	RPM	Vdc	RPM	Vdc	RPM	Vdc	RPM	Vdc	RPM	Vdc
900	1984	9.1	2113	9.6	—	—	—	—	—	—
975	2014	9.2	2144	9.8	—	—	—	—	—	—
1050	2043	9.3	—	—	—	—	—	—	—	—
1125	2071	9.5	—	—	—	—	—	—	—	—
1200	2098	9.6	—	—	—	—	—	—	—	—
1275	2124	9.7	—	—	—	—	—	—	—	—
1350	2150	9.8	—	—	—	—	—	—	—	—
1425	—	—	—	—	—	—	—	—	—	—
1500	—	—	—	—	—	—	—	—	—	—

Medium Static 1017-2190 RPM

50FC-A04 THREE PHASE – HIGH STATIC — 3 TON HORIZONTAL SUPPLY (RPM - VDC)

CFM	AVAILABLE EXTERNAL STATIC PRESSURE (in. wg)									
	0.2		0.4		0.6		0.8		1.0	
	RPM	Vdc	RPM	Vdc	RPM	Vdc	RPM	Vdc	RPM	Vdc
900	1017	4.1	1284	5.2	1501	6.0	1684	6.8	1843	7.4
975	1055	4.2	1311	5.3	1527	6.1	1711	6.9	1871	7.5
1050	1096	4.4	1340	5.4	1553	6.2	1737	7.0	1899	7.6
1125	1140	4.6	1371	5.5	1580	6.3	1763	7.1	1925	7.7
1200	1186	4.8	1404	5.6	1608	6.5	1789	7.2	1951	7.8
1275	1236	5.0	1440	5.8	1637	6.6	1816	7.3	1977	7.9
1350	1286	5.2	1477	5.9	1666	6.7	1843	7.4	2004	8.0
1425	1338	5.4	1517	6.1	1698	6.8	1871	7.5	2030	8.2
1500	1391	5.6	1559	6.3	1733	7.0	1900	7.6	2057	8.3

CFM	AVAILABLE EXTERNAL STATIC PRESSURE (in. wg)									
	1.2		1.4		1.6		1.8		2.0	
	RPM	Vdc	RPM	Vdc	RPM	Vdc	RPM	Vdc	RPM	Vdc
900	1984	8.0	2113	8.5	2231	9.0	2342	9.4	2446	9.8
975	2014	8.1	2144	8.6	2264	9.1	2376	9.5	2481	10.0
1050	2043	8.2	2174	8.7	2295	9.2	2408	9.7	—	—
1125	2071	8.3	2203	8.8	2325	9.3	2439	9.8	—	—
1200	2098	8.4	2231	9.0	2354	9.5	2469	9.9	—	—
1275	2124	8.5	2258	9.1	2382	9.6	—	—	—	—
1350	2150	8.6	2285	9.2	2410	9.7	—	—	—	—
1425	2176	8.7	2311	9.3	2436	9.8	—	—	—	—
1500	2202	8.8	2337	9.4	2462	9.9	—	—	—	—

High Static 1017-2490 RPM

50FC-A05 SINGLE PHASE — 4 TON HORIZONTAL SUPPLY (RPM - BHP)

CFM	AVAILABLE EXTERNAL STATIC PRESSURE (in. wg)									
	0.2		0.4		0.6		0.8		1.0	
	RPM	BHP	RPM	BHP	RPM	BHP	RPM	BHP	RPM	BHP
1200	1092	0.14	1306	0.24	1497	0.35	1667	0.49	1819	0.64
1300	1148	0.16	1348	0.26	1533	0.38	1700	0.52	1851	0.67
1400	1207	0.18	1394	0.28	1571	0.41	1734	0.55	1882	0.70
1500	1267	0.21	1442	0.31	1612	0.44	1770	0.58	1916	0.73
1600	1329	0.24	1493	0.35	1655	0.47	1808	0.61	1951	0.77
1700	1393	0.28	1546	0.38	1700	0.51	1848	0.65	1988	0.81
1800	1458	0.32	1602	0.42	1748	0.55	1890	0.70	2026	0.86
1900	1523	0.36	1659	0.47	1797	0.60	1934	0.75	2066	0.91
2000	1590	0.41	1719	0.52	1849	0.65	1980	0.80	2108	0.96

CFM	AVAILABLE EXTERNAL STATIC PRESSURE (in. wg)									
	1.2		1.4		1.6		1.8		2.0	
	RPM	BHP	RPM	BHP	RPM	BHP	RPM	BHP	RPM	BHP
1200	1958	0.79	2089	0.96	2211	1.14	2327	1.33	2438	1.53
1300	1988	0.83	2117	1.00	2238	1.18	2352	1.37	—	—
1400	2020	0.86	2146	1.03	2266	1.22	2379	1.41	—	—
1500	2051	0.90	2177	1.08	2296	1.26	2408	1.46	—	—
1600	2084	0.94	2209	1.12	2327	1.31	2438	1.51	—	—
1700	2119	0.99	2242	1.17	2358	1.36	—	—	—	—
1800	2154	1.03	2276	1.22	2391	1.41	—	—	—	—
1900	2191	1.08	2311	1.27	2424	1.47	—	—	—	—
2000	2230	1.14	2347	1.33	2459	1.53	—	—	—	—

Standard Static 1092-1900 RPM, 0.72 Max BHP

Medium Static 1092-2170 RPM, 1.06 Max BHP

High Static 1092-2460 RPM, 1.53 Max BHP

50FC-A05 SINGLE PHASE – STANDARD STATIC — 4 TON HORIZONTAL SUPPLY (RPM - VDC)

CFM	AVAILABLE EXTERNAL STATIC PRESSURE (in. wg)									
	0.2		0.4		0.6		0.8		1.0	
	RPM	Vdc	RPM	Vdc	RPM	Vdc	RPM	Vdc	RPM	Vdc
1200	1092	5.7	1306	6.9	1497	7.9	1667	8.8	1819	9.6
1300	1148	6.0	1348	7.1	1533	8.1	1700	8.9	1851	9.7
1400	1207	6.4	1394	7.3	1571	8.3	1734	9.1	1882	9.9
1500	1267	6.7	1442	7.6	1612	8.5	1770	9.3	—	—
1600	1329	7.0	1493	7.9	1655	8.7	1808	9.5	—	—
1700	1393	7.3	1546	8.1	1700	8.9	1848	9.7	—	—
1800	1458	7.7	1602	8.4	1748	9.2	1890	9.9	—	—
1900	1523	8.0	1659	8.7	1797	9.5	—	—	—	—
2000	1590	8.4	1719	9.0	1849	9.7	—	—	—	—

CFM	AVAILABLE EXTERNAL STATIC PRESSURE (in. wg)									
	1.2		1.4		1.6		1.8		2.0	
	RPM	Vdc	RPM	Vdc	RPM	Vdc	RPM	Vdc	RPM	Vdc
1200	—	—	—	—	—	—	—	—	—	—
1300	—	—	—	—	—	—	—	—	—	—
1400	—	—	—	—	—	—	—	—	—	—
1500	—	—	—	—	—	—	—	—	—	—
1600	—	—	—	—	—	—	—	—	—	—
1700	—	—	—	—	—	—	—	—	—	—
1800	—	—	—	—	—	—	—	—	—	—
1900	—	—	—	—	—	—	—	—	—	—
2000	—	—	—	—	—	—	—	—	—	—

Standard Static 1092-1900 RPM

50FC-A05 SINGLE PHASE – MEDIUM STATIC — 4 TON HORIZONTAL SUPPLY (RPM - VDC)

CFM	AVAILABLE EXTERNAL STATIC PRESSURE (in. wg)									
	0.2		0.4		0.6		0.8		1.0	
	RPM	Vdc	RPM	Vdc	RPM	Vdc	RPM	Vdc	RPM	Vdc
1200	1092	5.0	1306	6.0	1497	6.9	1667	7.7	1819	8.4
1300	1148	5.3	1348	6.2	1533	7.1	1700	7.8	1851	8.5
1400	1207	5.6	1394	6.4	1571	7.2	1734	8.0	1882	8.7
1500	1267	5.8	1442	6.6	1612	7.4	1770	8.2	1916	8.8
1600	1329	6.1	1493	6.9	1655	7.6	1808	8.3	1951	9.0
1700	1393	6.4	1546	7.1	1700	7.8	1848	8.5	1988	9.2
1800	1458	6.7	1602	7.4	1748	8.1	1890	8.7	2026	9.3
1900	1523	7.0	1659	7.6	1797	8.3	1934	8.9	2066	9.5
2000	1590	7.3	1719	7.9	1849	8.5	1980	9.1	2108	9.7

CFM	AVAILABLE EXTERNAL STATIC PRESSURE (in. wg)									
	1.2		1.4		1.6		1.8		2.0	
	RPM	Vdc	RPM	Vdc	RPM	Vdc	RPM	Vdc	RPM	Vdc
1200	1959	9.0	2089	9.6	—	—	—	—	—	—
1300	1988	9.2	2117	9.8	—	—	—	—	—	—
1400	2020	9.3	2146	9.9	—	—	—	—	—	—
1500	2051	9.5	—	—	—	—	—	—	—	—
1600	2084	9.6	—	—	—	—	—	—	—	—
1700	2119	9.8	—	—	—	—	—	—	—	—
1800	2154	9.9	—	—	—	—	—	—	—	—
1900	—	—	—	—	—	—	—	—	—	—
2000	—	—	—	—	—	—	—	—	—	—

Medium Static 1092-2170 RPM

50FC-A05 SINGLE PHASE – HIGH STATIC — 4 TON HORIZONTAL SUPPLY (RPM - VDC)

CFM	AVAILABLE EXTERNAL STATIC PRESSURE (in. wg)									
	0.2		0.4		0.6		0.8		1.0	
	RPM	Vdc	RPM	Vdc	RPM	Vdc	RPM	Vdc	RPM	Vdc
1200	1092	4.4	1306	5.3	1497	6.1	1667	6.8	1819	7.4
1300	1148	4.7	1348	5.5	1533	6.2	1700	6.9	1851	7.5
1400	1207	4.9	1394	5.7	1571	6.4	1734	7.0	1882	7.7
1500	1267	5.2	1442	5.9	1612	6.6	1770	7.2	1916	7.8
1600	1329	5.4	1493	6.1	1655	6.7	1808	7.3	1951	7.9
1700	1393	5.7	1546	6.3	1700	6.9	1848	7.5	1988	8.1
1800	1458	5.9	1602	6.5	1748	7.1	1890	7.7	2026	8.2
1900	1523	6.2	1659	6.7	1797	7.3	1934	7.9	2066	8.4
2000	1590	6.5	1719	7.0	1849	7.5	1980	8.0	2108	8.6

CFM	AVAILABLE EXTERNAL STATIC PRESSURE (in. wg)									
	1.2		1.4		1.6		1.8		2.0	
	RPM	Vdc	RPM	Vdc	RPM	Vdc	RPM	Vdc	RPM	Vdc
1200	1959	8.0	2089	8.5	2211	9.0	2327	9.5	2438	9.9
1300	1988	8.1	2117	8.6	2238	9.1	2352	9.6	—	—
1400	2020	8.2	2146	8.7	2266	9.2	2379	9.7	—	—
1500	2051	8.3	2177	8.8	2296	9.3	2408	9.8	—	—
1600	2084	8.5	2209	9.0	2327	9.5	2438	9.9	—	—
1700	2119	8.6	2242	9.1	2358	9.6	—	—	—	—
1800	2154	8.8	2276	9.3	2391	9.7	—	—	—	—
1900	2191	8.9	2311	9.4	2424	9.9	—	—	—	—
2000	2230	9.1	2347	9.5	2459	10.0	—	—	—	—

High Static 1092-2460 RPM

50FC-A05 THREE PHASE — 4 TON HORIZONTAL SUPPLY (RPM - BHP)

CFM	AVAILABLE EXTERNAL STATIC PRESSURE (in. wg)									
	0.2		0.4		0.6		0.8		1.0	
	RPM	BHP	RPM	BHP	RPM	BHP	RPM	BHP	RPM	BHP
1200	1093	0.14	1306	0.24	1497	0.35	1667	0.49	1819	0.64
1300	1148	0.16	1348	0.26	1533	0.38	1700	0.52	1850	0.67
1400	1206	0.18	1393	0.28	1571	0.41	1734	0.55	1883	0.70
1500	1266	0.21	1442	0.31	1612	0.44	1770	0.58	1916	0.73
1600	1329	0.24	1493	0.35	1655	0.47	1808	0.61	1951	0.77
1700	1393	0.28	1546	0.38	1700	0.51	1848	0.65	1988	0.81
1800	1458	0.32	1602	0.42	1747	0.55	1890	0.70	2026	0.86
1900	1523	0.36	1659	0.47	1797	0.60	1934	0.75	2066	0.91
2000	1590	0.41	1718	0.52	1849	0.65	1980	0.80	2108	0.96

CFM	AVAILABLE EXTERNAL STATIC PRESSURE (in. wg)									
	1.2		1.4		1.6		1.8		2.0	
	RPM	BHP	RPM	BHP	RPM	BHP	RPM	BHP	RPM	BHP
1200	1959	0.79	2089	0.96	2211	1.14	2327	1.33	2438	1.53
1300	1988	0.83	2117	1.00	2238	1.18	2352	1.37	2462	1.57
1400	2019	0.86	2146	1.03	2266	1.22	2379	1.41	2487	1.61
1500	2052	0.90	2177	1.08	2296	1.26	2408	1.46	2515	1.66
1600	2084	0.94	2209	1.12	2327	1.31	2438	1.51	2544	1.71
1700	2119	0.99	2242	1.17	2358	1.36	2469	1.56	2574	1.77
1800	2154	1.03	2276	1.22	2391	1.41	2500	1.61	2605	1.83
1900	2191	1.08	2311	1.27	2424	1.47	2533	1.68	2636	1.89
2000	2230	1.14	2347	1.33	2459	1.53	2566	1.74	—	—

Standard Static 1093-1900 RPM, 0.72 Max BHP

Medium Static 1093-2170 RPM, 1.06 Max BHP

High Static 1093-2660 RPM, 1.96 Max BHP

50FC-A05 THREE PHASE – STANDARD STATIC — 4 TON HORIZONTAL SUPPLY (RPM - VDC)

CFM	AVAILABLE EXTERNAL STATIC PRESSURE (in. wg)									
	0.2		0.4		0.6		0.8		1.0	
	RPM	Vdc	RPM	Vdc	RPM	Vdc	RPM	Vdc	RPM	Vdc
1200	1093	5.8	1306	6.9	1497	7.9	1667	8.8	1819	9.6
1300	1148	6.0	1348	7.1	1533	8.1	1700	8.9	1850	9.7
1400	1206	6.3	1393	7.3	1571	8.3	1734	9.1	1883	9.9
1500	1266	6.7	1442	7.6	1612	8.5	1770	9.3	—	—
1600	1329	7.0	1493	7.9	1655	8.7	1808	9.5	—	—
1700	1393	7.3	1546	8.1	1700	8.9	1848	9.7	—	—
1800	1458	7.7	1602	8.4	1747	9.2	1890	9.9	—	—
1900	1523	8.0	1659	8.7	1797	9.5	—	—	—	—
2000	1590	8.4	1718	9.0	1849	9.7	—	—	—	—

CFM	AVAILABLE EXTERNAL STATIC PRESSURE (in. wg)									
	1.2		1.4		1.6		1.8		2.0	
	RPM	Vdc	RPM	Vdc	RPM	Vdc	RPM	Vdc	RPM	Vdc
1200	—	—	—	—	—	—	—	—	—	—
1300	—	—	—	—	—	—	—	—	—	—
1400	—	—	—	—	—	—	—	—	—	—
1500	—	—	—	—	—	—	—	—	—	—
1600	—	—	—	—	—	—	—	—	—	—
1700	—	—	—	—	—	—	—	—	—	—
1800	—	—	—	—	—	—	—	—	—	—
1900	—	—	—	—	—	—	—	—	—	—
2000	—	—	—	—	—	—	—	—	—	—

Standard Static 1093-1900 RPM

50FC-M05 THREE PHASE – MEDIUM STATIC — 4 TON HORIZONTAL SUPPLY (RPM - VDC)

CFM	AVAILABLE EXTERNAL STATIC PRESSURE (in. wg)									
	0.2		0.4		0.6		0.8		1.0	
	RPM	Vdc	RPM	Vdc	RPM	Vdc	RPM	Vdc	RPM	Vdc
1200	1093	5.0	1306	6.0	1497	6.9	1667	7.7	1819	8.4
1300	1148	5.3	1348	6.2	1533	7.1	1700	7.8	1850	8.5
1400	1206	5.6	1393	6.4	1571	7.2	1734	8.0	1883	8.7
1500	1266	5.8	1442	6.6	1612	7.4	1770	8.2	1916	8.8
1600	1329	6.1	1493	6.9	1655	7.6	1808	8.3	1951	9.0
1700	1393	6.4	1546	7.1	1700	7.8	1848	8.5	1988	9.2
1800	1458	6.7	1602	7.4	1747	8.1	1890	8.7	2026	9.3
1900	1523	7.0	1659	7.6	1797	8.3	1934	8.9	2066	9.5
2000	1590	7.3	1718	7.9	1849	8.5	1980	9.1	2108	9.7

CFM	AVAILABLE EXTERNAL STATIC PRESSURE (in. wg)									
	1.2		1.4		1.6		1.8		2.0	
	RPM	Vdc	RPM	Vdc	RPM	Vdc	RPM	Vdc	RPM	Vdc
1200	1959	9.0	2089	9.6	—	—	—	—	—	—
1300	1988	9.2	2117	9.8	—	—	—	—	—	—
1400	2019	9.3	2146	9.9	—	—	—	—	—	—
1500	2052	9.5	—	—	—	—	—	—	—	—
1600	2084	9.6	—	—	—	—	—	—	—	—
1700	2119	9.8	—	—	—	—	—	—	—	—
1800	2154	9.9	—	—	—	—	—	—	—	—
1900	—	—	—	—	—	—	—	—	—	—
2000	—	—	—	—	—	—	—	—	—	—

Medium Static 1093-2170 RPM

50FC-M05 THREE PHASE – HIGH STATIC — 4 TON HORIZONTAL SUPPLY (RPM - VDC)

CFM	AVAILABLE EXTERNAL STATIC PRESSURE (in. wg)									
	0.2		0.4		0.6		0.8		1.0	
	RPM	Vdc	RPM	Vdc	RPM	Vdc	RPM	Vdc	RPM	Vdc
1200	1093	4.1	1306	4.9	1497	5.6	1667	6.3	1819	6.8
1300	1148	4.3	1348	5.1	1533	5.8	1700	6.4	1850	7.0
1400	1206	4.5	1393	5.2	1571	5.9	1734	6.5	1883	7.1
1500	1266	4.8	1442	5.4	1612	6.1	1770	6.7	1916	7.2
1600	1329	5.0	1493	5.6	1655	6.2	1808	6.8	1951	7.3
1700	1393	5.2	1546	5.8	1700	6.4	1848	6.9	1988	7.5
1800	1458	5.5	1602	6.0	1747	6.6	1890	7.1	2026	7.6
1900	1523	5.7	1659	6.2	1797	6.8	1934	7.3	2066	7.8
2000	1590	6.0	1718	6.5	1849	7.0	1980	7.4	2108	7.9

CFM	AVAILABLE EXTERNAL STATIC PRESSURE (in. wg)									
	1.2		1.4		1.6		1.8		2.0	
	RPM	Vdc	RPM	Vdc	RPM	Vdc	RPM	Vdc	RPM	Vdc
1200	1959	7.4	2089	7.9	2211	8.3	2327	8.7	2438	9.2
1300	1988	7.5	2117	8.0	2238	8.4	2352	8.8	2462	9.3
1400	2019	7.6	2146	8.1	2266	8.5	2379	8.9	2487	9.3
1500	2052	7.7	2177	8.2	2296	8.6	2408	9.1	2515	9.5
1600	2084	7.8	2209	8.3	2327	8.7	2438	9.2	2544	9.6
1700	2119	8.0	2242	8.4	2358	8.9	2469	9.3	2574	9.7
1800	2154	8.1	2276	8.6	2391	9.0	2500	9.4	2605	9.8
1900	2191	8.2	2311	8.7	2424	9.1	2533	9.5	2636	9.9
2000	2230	8.4	2347	8.8	2459	9.2	2566	9.6	—	—

High Static 1093-2660 RPM

50FC-A06 SINGLE PHASE — 5 TON HORIZONTAL SUPPLY (RPM - BHP)

CFM	AVAILABLE EXTERNAL STATIC PRESSURE (in. wg)									
	0.2		0.4		0.6		0.8		1.0	
	RPM	BHP	RPM	BHP	RPM	BHP	RPM	BHP	RPM	BHP
1500	1267	0.21	1442	0.31	1612	0.44	1770	0.58	1916	0.73
1625	1345	0.25	1506	0.35	1666	0.48	1818	0.62	1960	0.78
1750	1425	0.30	1574	0.40	1723	0.53	1869	0.68	2006	0.84
1875	1507	0.35	1644	0.46	1785	0.59	1923	0.73	2056	0.90
2000	1590	0.41	1718	0.52	1849	0.65	1980	0.80	2108	0.96
2125	1674	0.48	1794	0.59	1917	0.72	2041	0.87	2163	1.04
2250	1759	0.56	1872	0.67	1987	0.80	2104	0.95	2221	1.12
2375	1845	0.64	1951	0.76	2060	0.89	2171	1.05	2281	1.21
2500	1932	0.74	2032	0.86	2135	0.99	2239	1.15	2345	1.32

CFM	AVAILABLE EXTERNAL STATIC PRESSURE (in. wg)									
	1.2		1.4		1.6		1.8		2.0	
	RPM	BHP	RPM	BHP	RPM	BHP	RPM	BHP	RPM	BHP
1500	2051	0.90	2177	1.08	2296	1.26	—	—	—	—
1625	2093	0.95	2217	1.13	2334	1.32	—	—	—	—
1750	2136	1.01	2259	1.19	2374	1.38	—	—	—	—
1875	2182	1.07	2302	1.26	—	—	—	—	—	—
2000	2230	1.14	2347	1.33	—	—	—	—	—	—
2125	2281	1.22	—	—	—	—	—	—	—	—
2250	2334	1.30	—	—	—	—	—	—	—	—
2375	2390	1.40	—	—	—	—	—	—	—	—
2500	—	—	—	—	—	—	—	—	—	—

Standard Static 1267-2150 RPM, 1.06 Max BHP

Medium Static 1267-2390 RPM, 1.44 Max BHP

50FC-A06 SINGLE PHASE – STANDARD STATIC — 5 TON HORIZONTAL SUPPLY (RPM - VDC)

CFM	AVAILABLE EXTERNAL STATIC PRESSURE (in. wg)									
	0.2		0.4		0.6		0.8		1.0	
	RPM	Vdc	RPM	Vdc	RPM	Vdc	RPM	Vdc	RPM	Vdc
1500	1267	5.9	1442	6.7	1612	7.5	1770	8.2	1916	8.9
1625	1345	6.3	1506	7.0	1666	7.7	1818	8.5	1960	9.1
1750	1425	6.6	1574	7.3	1723	8.0	1869	8.7	2006	9.3
1875	1507	7.0	1644	7.6	1785	8.3	1923	8.9	2056	9.6
2000	1590	7.4	1719	8.0	1849	8.6	1980	9.2	2108	9.8
2125	1674	7.8	1794	8.3	1917	8.9	2041	9.5	—	—
2250	1760	8.2	1872	8.7	1987	9.2	2104	9.8	—	—
2375	1845	8.6	1951	9.1	2060	9.6	—	—	—	—
2500	1932	9.0	2032	9.5	2135	9.9	—	—	—	—

CFM	AVAILABLE EXTERNAL STATIC PRESSURE (in. wg)									
	1.2		1.4		1.6		1.8		2.0	
	RPM	Vdc	RPM	Vdc	RPM	Vdc	RPM	Vdc	RPM	Vdc
1500	2051	9.5	—	—	—	—	—	—	—	—
1625	2093	9.7	—	—	—	—	—	—	—	—
1750	2136	9.9	—	—	—	—	—	—	—	—
1875	—	—	—	—	—	—	—	—	—	—
2000	—	—	—	—	—	—	—	—	—	—
2125	—	—	—	—	—	—	—	—	—	—
2250	—	—	—	—	—	—	—	—	—	—
2375	—	—	—	—	—	—	—	—	—	—
2500	—	—	—	—	—	—	—	—	—	—

Standard Static 1267-2150 RPM

Fan data (cont)

50FC-A06 SINGLE PHASE – MEDIUM STATIC — 5 TON HORIZONTAL SUPPLY (RPM - VDC)

CFM	AVAILABLE EXTERNAL STATIC PRESSURE (in. wg)									
	0.2		0.4		0.6		0.8		1.0	
	RPM	Vdc	RPM	Vdc	RPM	Vdc	RPM	Vdc	RPM	Vdc
1500	1267	5.3	1442	6.0	1612	6.7	1770	7.4	1916	8.0
1625	1345	5.6	1506	6.3	1666	7.0	1818	7.6	1960	8.2
1750	1425	6.0	1574	6.6	1723	7.2	1869	7.8	2006	8.4
1875	1507	6.3	1644	6.9	1785	7.5	1923	8.0	2056	8.6
2000	1590	6.7	1719	7.2	1849	7.7	1980	8.3	2108	8.8
2125	1674	7.0	1794	7.5	1917	8.0	2041	8.5	2163	9.1
2250	1760	7.4	1872	7.8	1987	8.3	2104	8.8	2221	9.3
2375	1845	7.7	1951	8.2	2060	8.6	2171	9.1	2281	9.5
2500	1932	8.1	2032	8.5	2135	8.9	2239	9.4	2345	9.8

CFM	AVAILABLE EXTERNAL STATIC PRESSURE (in. wg)									
	1.2		1.4		1.6		1.8		2.0	
	RPM	Vdc	RPM	Vdc	RPM	Vdc	RPM	Vdc	RPM	Vdc
1500	2051	8.6	2177	9.1	2296	9.6	—	—	—	—
1625	2093	8.8	2217	9.3	2334	9.8	—	—	—	—
1750	2136	8.9	2259	9.5	2374	9.9	—	—	—	—
1875	2182	9.1	2302	9.6	—	—	—	—	—	—
2000	2230	9.3	2347	9.8	—	—	—	—	—	—
2125	2281	9.5	—	—	—	—	—	—	—	—
2250	2334	9.8	—	—	—	—	—	—	—	—
2375	—	—	—	—	—	—	—	—	—	—
2500	—	—	—	—	—	—	—	—	—	—

Medium Static 1267-2390 RPM

50FC-A06 THREE PHASE — 5 TON HORIZONTAL SUPPLY (RPM - BHP)

CFM	AVAILABLE EXTERNAL STATIC PRESSURE (in. wg)									
	0.2		0.4		0.6		0.8		1.0	
	RPM	BHP	RPM	BHP	RPM	BHP	RPM	BHP	RPM	BHP
1500	1267	0.21	1442	0.31	1612	0.44	1770	0.58	1916	0.73
1625	1345	0.25	1506	0.35	1666	0.48	1818	0.62	1960	0.78
1750	1425	0.30	1574	0.40	1723	0.53	1869	0.68	2006	0.84
1875	1507	0.35	1644	0.46	1785	0.59	1923	0.73	2056	0.90
2000	1590	0.41	1718	0.52	1849	0.65	1980	0.80	2108	0.96
2125	1674	0.48	1794	0.59	1917	0.72	2041	0.87	2163	1.04
2250	1759	0.56	1872	0.67	1987	0.80	2104	0.95	2221	1.12
2375	1845	0.64	1951	0.76	2060	0.89	2171	1.05	2281	1.21
2500	1932	0.74	2032	0.86	2135	0.99	2239	1.15	2345	1.32

CFM	AVAILABLE EXTERNAL STATIC PRESSURE (in. wg)									
	1.2		1.4		1.6		1.8		2.0	
	RPM	BHP	RPM	BHP	RPM	BHP	RPM	BHP	RPM	BHP
1500	2051	0.90	2177	1.08	2296	1.26	2408	1.46	2515	1.66
1625	2093	0.95	2217	1.13	2334	1.32	2445	1.52	2551	1.72
1750	2136	1.01	2259	1.19	2374	1.38	2484	1.59	2589	1.80
1875	2182	1.07	2302	1.26	2416	1.45	2524	1.66	2628	1.87
2000	2230	1.14	2347	1.33	2459	1.53	2566	1.74	2669	1.96
2125	2281	1.22	2395	1.41	2505	1.61	2610	1.83	2711	2.05
2250	2334	1.30	2445	1.50	2552	1.70	2655	1.92	2754	2.14
2375	2391	1.40	2497	1.59	2601	1.80	2702	2.02	2800	2.25
2500	2449	1.50	2552	1.70	2653	1.91	2751	2.13	—	—

Standard Static 1267-2150 RPM, 1.06 Max BHP

High Static 1267-2836 RPM, 2.43 Max BHP

Medium Static 1267-2390 RPM, 1.44 Max BHP

50FC-A06 THREE PHASE – STANDARD STATIC — 5 TON HORIZONTAL SUPPLY (RPM - VDC)

CFM	AVAILABLE EXTERNAL STATIC PRESSURE (in. wg)									
	0.2		0.4		0.6		0.8		1.0	
	RPM	Vdc	RPM	Vdc	RPM	Vdc	RPM	Vdc	RPM	Vdc
1500	1267	5.9	1442	6.7	1612	7.5	1770	8.2	1916	8.9
1625	1345	6.3	1506	7.0	1666	7.7	1818	8.5	1960	9.1
1750	1425	6.6	1574	7.3	1723	8.0	1869	8.7	2006	9.3
1875	1507	7.0	1644	7.6	1785	8.3	1923	8.9	2056	9.6
2000	1590	7.4	1719	8.0	1849	8.6	1980	9.2	2108	9.8
2125	1674	7.8	1794	8.3	1917	8.9	2041	9.5	—	—
2250	1760	8.2	1872	8.7	1987	9.2	2104	9.8	—	—
2375	1845	8.6	1951	9.1	2060	9.6	—	—	—	—
2500	1932	9.0	2032	9.5	2135	9.9	—	—	—	—

CFM	AVAILABLE EXTERNAL STATIC PRESSURE (in. wg)									
	1.2		1.4		1.6		1.8		2.0	
	RPM	Vdc	RPM	Vdc	RPM	Vdc	RPM	Vdc	RPM	Vdc
1500	2051	9.5	—	—	—	—	—	—	—	—
1625	2093	9.7	—	—	—	—	—	—	—	—
1750	2136	9.9	—	—	—	—	—	—	—	—
1875	—	—	—	—	—	—	—	—	—	—
2000	—	—	—	—	—	—	—	—	—	—
2125	—	—	—	—	—	—	—	—	—	—
2250	—	—	—	—	—	—	—	—	—	—
2375	—	—	—	—	—	—	—	—	—	—
2500	—	—	—	—	—	—	—	—	—	—

Standard Static 1267-2150 RPM

50FC-A06 THREE PHASE – MEDIUM STATIC — 5 TON HORIZONTAL SUPPLY (RPM - VDC)

CFM	AVAILABLE EXTERNAL STATIC PRESSURE (in. wg)									
	0.2		0.4		0.6		0.8		1.0	
	RPM	Vdc	RPM	Vdc	RPM	Vdc	RPM	Vdc	RPM	Vdc
1500	1267	5.3	1442	6.0	1612	6.7	1770	7.4	1916	8.0
1625	1345	5.6	1506	6.3	1666	7.0	1818	7.6	1960	8.2
1750	1425	6.0	1574	6.6	1723	7.2	1869	7.8	2006	8.4
1875	1507	6.3	1644	6.9	1785	7.5	1923	8.0	2056	8.6
2000	1590	6.7	1719	7.2	1849	7.7	1980	8.3	2108	8.8
2125	1674	7.0	1794	7.5	1917	8.0	2041	8.5	2163	9.1
2250	1760	7.4	1872	7.8	1987	8.3	2104	8.8	2221	9.3
2375	1845	7.7	1951	8.2	2060	8.6	2171	9.1	2281	9.5
2500	1932	8.1	2032	8.5	2135	8.9	2239	9.4	2345	9.8

CFM	AVAILABLE EXTERNAL STATIC PRESSURE (in. wg)									
	1.2		1.4		1.6		1.8		2.0	
	RPM	Vdc	RPM	Vdc	RPM	Vdc	RPM	Vdc	RPM	Vdc
1500	2051	8.6	2177	9.1	2296	9.6	—	—	—	—
1625	2093	8.8	2217	9.3	2334	9.8	—	—	—	—
1750	2136	8.9	2259	9.5	2374	9.9	—	—	—	—
1875	2182	9.1	2302	9.6	—	—	—	—	—	—
2000	2230	9.3	2347	9.8	—	—	—	—	—	—
2125	2281	9.5	—	—	—	—	—	—	—	—
2250	2334	9.8	—	—	—	—	—	—	—	—
2375	—	—	—	—	—	—	—	—	—	—
2500	—	—	—	—	—	—	—	—	—	—

Medium Static 1267-2390 RPM

50FC-A06 THREE PHASE – HIGH STATIC — 5 TON HORIZONTAL SUPPLY (RPM - VDC)

CFM	AVAILABLE EXTERNAL STATIC PRESSURE (in. wg)									
	0.2		0.4		0.6		0.8		1.0	
	RPM	Vdc	RPM	Vdc	RPM	Vdc	RPM	Vdc	RPM	Vdc
1500	1267	4.5	1442	5.1	1612	5.7	1770	6.2	1916	6.8
1625	1345	4.7	1506	5.3	1666	5.9	1818	6.4	1960	6.9
1750	1425	5.0	1574	5.6	1723	6.1	1869	6.6	2006	7.1
1875	1507	5.3	1644	5.8	1785	6.3	1923	6.8	2056	7.2
2000	1590	5.6	1719	6.1	1849	6.5	1980	7.0	2108	7.4
2125	1674	5.9	1794	6.3	1917	6.8	2041	7.2	2163	7.6
2250	1760	6.2	1872	6.6	1987	7.0	2104	7.4	2221	7.8
2375	1845	6.5	1951	6.9	2060	7.3	2171	7.7	2281	8.0
2500	1932	6.8	2032	7.2	2135	7.5	2239	7.9	2345	8.3

CFM	AVAILABLE EXTERNAL STATIC PRESSURE (in. wg)									
	1.2		1.4		1.6		1.8		2.0	
	RPM	Vdc	RPM	Vdc	RPM	Vdc	RPM	Vdc	RPM	Vdc
1500	2051	7.2	2177	7.7	2296	8.1	2408	8.5	2515	8.9
1625	2093	7.4	2217	7.8	2334	8.2	2445	8.6	2551	9.0
1750	2136	7.5	2259	8.0	2374	8.4	2484	8.8	2589	9.1
1875	2182	7.7	2302	8.1	2416	8.5	2524	8.9	2628	9.3
2000	2230	7.9	2347	8.3	2459	8.7	2566	9.0	2669	9.4
2125	2281	8.0	2395	8.4	2505	8.8	2610	9.2	2711	9.6
2250	2334	8.2	2445	8.6	2552	9.0	2655	9.4	2755	9.7
2375	2391	8.4	2498	8.8	2602	9.2	2702	9.5	2800	9.9
2500	2449	8.6	2552	9.0	2653	9.4	2752	9.7	—	—

High Static 1267-2836 RPM

50FC-M07 THREE PHASE — 6 TON HORIZONTAL SUPPLY (RPM - BHP)

CFM	AVAILABLE EXTERNAL STATIC PRESSURE (in. wg)									
	0.2		0.4		0.6		0.8		1.0	
	RPM	BHP	RPM	BHP	RPM	BHP	RPM	BHP	RPM	BHP
1800	1379	0.27	1512	0.35	1650	0.46	1786	0.58	1918	0.72
1950	1473	0.32	1594	0.41	1721	0.52	1848	0.64	1973	0.78
2100	1569	0.39	1680	0.48	1796	0.59	1915	0.71	2032	0.85
2250	1666	0.47	1769	0.56	1876	0.67	1986	0.79	2096	0.93
2400	1764	0.55	1860	0.65	1959	0.76	2061	0.88	2165	1.02
2550	1863	0.65	1952	0.75	2045	0.86	2140	0.99	2237	1.13
2700	1963	0.76	2047	0.86	2133	0.97	2222	1.10	2313	1.24
2850	2063	0.88	2142	0.99	2223	1.10	2307	1.23	2393	1.37
3000	2163	1.01	2238	1.12	2315	1.24	2394	1.37	2474	1.52

CFM	AVAILABLE EXTERNAL STATIC PRESSURE (in. wg)									
	1.2		1.4		1.6		1.8		2.0	
	RPM	BHP	RPM	BHP	RPM	BHP	RPM	BHP	RPM	BHP
1800	2044	0.87	2163	1.03	2276	1.20	2383	1.38	2486	1.57
1950	2094	0.93	2210	1.10	2320	1.27	2426	1.45	2527	1.64
2100	2148	1.00	2260	1.17	2367	1.34	2471	1.53	2570	1.72
2250	2206	1.08	2313	1.25	2417	1.43	2518	1.61	2616	1.81
2400	2268	1.18	2371	1.34	2471	1.52	2569	1.71	2664	1.90
2550	2335	1.28	2432	1.45	2528	1.62	2622	1.81	2715	2.01
2700	2405	1.40	2497	1.56	2589	1.74	2680	1.93	2769	2.13
2850	2479	1.53	2566	1.69	2654	1.87	2740	2.06	2826	2.26
3000	2556	1.67	2639	1.84	2722	2.02	2804	2.21	—	—

Standard Static 1379-2300 RPM, 1.31 Max BHP

Medium Static 1379-2530 RPM, 1.76 Max BHP

High Static 1379-2836 RPM, 2.43 Max BHP

50FC-M07 THREE PHASE – STANDARD STATIC — 6 TON HORIZONTAL SUPPLY (RPM - VDC)

CFM	AVAILABLE EXTERNAL STATIC PRESSURE (in. wg)									
	0.2		0.4		0.6		0.8		1.0	
	RPM	Vdc	RPM	Vdc	RPM	Vdc	RPM	Vdc	RPM	Vdc
1800	1379	6.0	1512	6.6	1650	7.2	1786	7.8	1918	8.3
1950	1473	6.4	1594	6.9	1721	7.5	1848	8.0	1973	8.6
2100	1569	6.8	1680	7.3	1796	7.8	1915	8.3	2032	8.8
2250	1666	7.2	1769	7.7	1876	8.2	1986	8.6	2096	9.1
2400	1764	7.7	1860	8.1	1959	8.5	2061	9.0	2165	9.4
2550	1863	8.1	1952	8.5	2045	8.9	2140	9.3	2237	9.7
2700	1963	8.5	2047	8.9	2133	9.3	2222	9.7	—	—
2850	2063	9.0	2142	9.3	2223	9.7	—	—	—	—
3000	2163	9.4	2238	9.7	—	—	—	—	—	—

CFM	AVAILABLE EXTERNAL STATIC PRESSURE (in. wg)									
	1.2		1.4		1.6		1.8		2.0	
	RPM	Vdc	RPM	Vdc	RPM	Vdc	RPM	Vdc	RPM	Vdc
1800	2044	8.9	2163	9.4	2276	9.9	—	—	—	—
1950	2094	9.1	2210	9.6	—	—	—	—	—	—
2100	2148	9.3	2260	9.8	—	—	—	—	—	—
2250	2206	9.6	—	—	—	—	—	—	—	—
2400	2268	9.9	—	—	—	—	—	—	—	—
2550	—	—	—	—	—	—	—	—	—	—
2700	—	—	—	—	—	—	—	—	—	—
2850	—	—	—	—	—	—	—	—	—	—
3000	—	—	—	—	—	—	—	—	—	—

Standard Static 1379-2300 RPM

50FC-M07 THREE PHASE – MEDIUM STATIC — 6 TON HORIZONTAL SUPPLY (RPM - VDC)

CFM	AVAILABLE EXTERNAL STATIC PRESSURE (in. wg)									
	0.2		0.4		0.6		0.8		1.0	
	RPM	Vdc	RPM	Vdc	RPM	Vdc	RPM	Vdc	RPM	Vdc
1800	1379	5.5	1512	6.0	1650	6.5	1786	7.1	1918	7.6
1950	1473	5.8	1594	6.3	1721	6.8	1848	7.3	1973	7.8
2100	1569	6.2	1680	6.6	1796	7.1	1915	7.6	2032	8.0
2250	1666	6.6	1769	7.0	1876	7.4	1986	7.8	2096	8.3
2400	1764	7.0	1860	7.4	1959	7.7	2061	8.1	2165	8.6
2550	1863	7.4	1952	7.7	2045	8.1	2140	8.5	2237	8.8
2700	1963	7.8	2047	8.1	2133	8.4	2222	8.8	2313	9.1
2850	2063	8.2	2142	8.5	2223	8.8	2307	9.1	2393	9.5
3000	2163	8.5	2238	8.8	2315	9.2	2394	9.5	2474	9.8

CFM	AVAILABLE EXTERNAL STATIC PRESSURE (in. wg)									
	1.2		1.4		1.6		1.8		2.0	
	RPM	Vdc	RPM	Vdc	RPM	Vdc	RPM	Vdc	RPM	Vdc
1800	2044	8.1	2163	8.5	2276	9.0	2383	9.4	2486	9.8
1950	2094	8.3	2210	8.7	2320	9.2	2426	9.6	2527	10.0
2100	2148	8.5	2260	8.9	2367	9.4	2471	9.8	—	—
2250	2206	8.7	2313	9.1	2417	9.6	2518	10.0	—	—
2400	2268	9.0	2371	9.4	2471	9.8	—	—	—	—
2550	2335	9.2	2432	9.6	2528	10.0	—	—	—	—
2700	2405	9.5	2497	9.9	—	—	—	—	—	—
2850	2479	9.8	—	—	—	—	—	—	—	—
3000	—	—	—	—	—	—	—	—	—	—

Medium Static 1379-2530 RPM

50FC-M07 THREE PHASE – HIGH STATIC — 6 TON HORIZONTAL SUPPLY (RPM - VDC)

CFM	AVAILABLE EXTERNAL STATIC PRESSURE (in. wg)									
	0.2		0.4		0.6		0.8		1.0	
	RPM	Vdc	RPM	Vdc	RPM	Vdc	RPM	Vdc	RPM	Vdc
1800	1379	4.9	1512	5.3	1650	5.8	1786	6.3	1918	6.8
1950	1473	5.2	1594	5.6	1721	6.1	1848	6.5	1973	7.0
2100	1569	5.5	1680	5.9	1796	6.3	1915	6.8	2032	7.2
2250	1666	5.9	1769	6.2	1876	6.6	1986	7.0	2096	7.4
2400	1764	6.2	1860	6.6	1959	6.9	2061	7.3	2165	7.6
2550	1863	6.6	1952	6.9	2045	7.2	2140	7.5	2237	7.9
2700	1963	6.9	2047	7.2	2133	7.5	2222	7.8	2313	8.2
2850	2063	7.3	2142	7.6	2223	7.8	2307	8.1	2393	8.4
3000	2163	7.6	2238	7.9	2315	8.2	2394	8.4	2474	8.7

CFM	AVAILABLE EXTERNAL STATIC PRESSURE (in. wg)									
	1.2		1.4		1.6		1.8		2.0	
	RPM	Vdc	RPM	Vdc	RPM	Vdc	RPM	Vdc	RPM	Vdc
1800	2044	7.2	2163	7.6	2276	8.0	2383	8.4	2486	8.8
1950	2094	7.4	2210	7.8	2320	8.2	2426	8.6	2527	8.9
2100	2148	7.6	2260	8.0	2367	8.3	2471	8.7	2570	9.1
2250	2206	7.8	2313	8.2	2417	8.5	2518	8.9	2616	9.2
2400	2268	8.0	2371	8.4	2471	8.7	2569	9.1	2664	9.4
2550	2335	8.2	2432	8.6	2528	8.9	2622	9.2	2715	9.6
2700	2405	8.5	2497	8.8	2589	9.1	2680	9.4	2769	9.8
2850	2479	8.7	2566	9.0	2654	9.4	2740	9.7	2826	10.0
3000	2556	9.0	2639	9.3	2722	9.6	2804	9.9	—	—

High Static 1379-2836 RPM

Legend and Notes

Applicable for Electrical Data Tables on pages 98 to 118

LEGEND

BRKR — Circuit Breaker
C.O. — Convenience Outlet
FLA — Full Load Amps
IFM — Indoor Fan Motor
LRA — Locked Rotor Amps
MCA — Minimum Circuit Amps
P.E. — Power Exhaust
PWRD C.O. — Powered Convenience Outlet
RLA — Rated Load Amps
UNPWR C.O.— Unpowered Convenience Outlet

NOTES:

1. In compliance with NEC requirements for multi-motor and combination load equipment (refer to NEC Articles 430 and 440), the overcurrent protective device for the unit shall be fuse or HACR breaker. Canadian units may be fuse or circuit breaker.
2. For 208/230 v units, where one value is show it is the same for either 208 or 230 volts.
3. **Unbalanced 3-Phase Supply Voltage**
   Never operate a motor where a phase imbalance in supply voltage is greater than 2%. Use the following formula to determine the percentage of voltage imbalance.

$$\text{\% Voltage Imbalance} = 100 \times \frac{\text{max voltage deviation from average voltage}}{\text{average voltage}}$$

Example: Supply voltage is 230-3-60

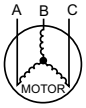

AB = 224 v
BC = 231 v
AC = 226 v

$$\text{Average Voltage} = \frac{(224 + 231 + 226)}{3} = \frac{681}{3} = 227$$

Determine maximum deviation from average voltage.
(AB) 227-224 = 3 v
(BC) 231-227 = 4 v
(AC) 227-226 = 1 v
Maximum deviation is 4 v.
Determine percent of voltage imbalance.

$$\text{\% Voltage Imbalance} = 100\text{x} \frac{4}{227} = 1.78\%$$

This amount of phase imbalance is satisfactory as it is below the maximum allowable 2%.

IMPORTANT: If the supply voltage phase imbalance is more than 2%, contact your local electric utility company immediately.

48/50FC**04-07 COOLING ELECTRICAL DATA

48/50FC UNIT	V-Ph-Hz	UNIT VOLTAGE RANGE		COMPRESSOR		OFM (EA)		IFM			COMBUSTION FAN MOTOR (48FC ONLY)	POWER EXHAUST	
		MIN	MAX	RLA	LRA	WATTS	FLA	TYPE	EFFCY AT FULL LOAD	FLA	FLA	KIT QTY	FLA (EA KIT)
**04	208-1-60	187	253	15.4	84	275	1.5	STD	84%	4.3	0.48	1	1.9
								MED	84%	5.1			
								HIGH	85%	7.3			
	230-1-60	187	253	15.4	84	275	1.5	STD	84%	4.3	0.48	1	1.9
								MED	84%	5.1			
								HIGH	85%	7.3			
	208-3-60	187	253	10.4	73	275	1.5	STD	84%	4.3	0.48	1	1.9
								MED	84%	5.1			
								HIGH	85%	7.3			
	230-3-60	187	253	10.4	73	275	1.5	STD	84%	4.3	0.48	1	1.9
								MED	84%	5.1			
								HIGH	85%	7.3			
	460-3-60	414	506	5.8	38	275	0.8	STD	85%	1.2	0.25	1	1.0
								MED	85%	1.2			
								HIGH	84%	1.7			
	575-3-60	518	633	3.8	37	275	0.6	STD	84%	1.1	0.24	1	1.9
								MED	84%	1.1			
								HIGH	85%	1.5			
**05	208-1-60	187	253	19.6	130	275	1.5	STD	87%	5.0	0.48	1	1.9
								MED	86%	7.1			
								HIGH	84%	9.2			
	230-1-60	187	253	19.6	130	275	1.5	STD	87%	5.0	0.48	1	1.9
								MED	86%	7.1			
								HIGH	84%	9.2			
	208-3-60	187	253	13.7	83	275	1.5	STD	87%	5.0	0.48	1	1.9
								MED	86%	7.1			
								HIGH	85%	5.5			
	230-3-60	187	253	13.7	83	275	1.5	STD	87%	5.0	0.48	1	1.9
								MED	86%	7.1			
								HIGH	85%	5.5			
	460-3-60	414	506	6.2	41	275	0.8	STD	85%	1.2	0.25	1	1.0
								MED	86%	1.7			
								HIGH	88%	2.6			
	575-3-60	518	633	4.8	33	275	0.6	STD	84%	1.1	0.24	1	1.9
								MED	85%	1.5			
								HIGH	88%	2.3			
**06	208-1-60	187	253	24.4	144	275	1.5	STD	86%	7.2	0.48	1	1.9
								MED	84%	9.2			
								HIGH	87%	11.7			
	230-1-60	187	253	24.4	144	275	1.5	STD	86%	7.2	0.48	1	1.9
								MED	84%	9.2			
								HIGH	87%	11.7			
	208-3-60	187	253	16.0	110	275	1.5	STD	86%	7.2	0.48	1	1.9
								MED	84%	9.2			
								HIGH	84%	6.5			
	230-3-60	187	253	16.0	110	275	1.5	STD	86%	7.2	0.48	1	1.9
								MED	84%	9.2			
								HIGH	84%	6.5			
	460-3-60	414	506	7.8	52	275	0.8	STD	86%	1.7	0.25	1	1.0
								MED	86%	2.1			
								HIGH	88%	3.1			
	575-3-60	518	633	5.7	39	275	0.6	STD	84%	1.5	0.24	1	1.9
								MED	85%	2.0			
								HIGH	87%	2.7			

48/50FC**04-07 COOLING ELECTRICAL DATA (cont)

48/50FC UNIT	V-Ph-Hz	UNIT VOLTAGE RANGE		COMPRESSOR		OFM (EA)		IFM			COMBUSTION FAN MOTOR (48FC ONLY)	POWER EXHAUST	
		MIN	MAX	RLA	LRA	WATTS	FLA	TYPE	EFFCY AT FULL LOAD	FLA	FLA	KIT QTY	FLA (EA KIT)
**07	208-3-60	187	253	17.5	136	275	1.5	STD	84%	9.2	0.48	1	1.9
								MED	87%	5.5			
								HIGH	84%	6.5			
	230-3-60	187	253	17.5	136	275	1.5	STD	84%	9.2	0.48	1	1.9
								MED	87%	5.5			
								HIGH	84%	6.5			
	460-3-60	414	506	8.4	66	275	0.8	STD	85%	2.1	0.25	1	1.0
								MED	88%	2.6			
								HIGH	88%	3.1			
	575-3-60	518	633	6.3	55	275	0.6	STD	85%	2.0	0.24	1	1.9
								MED	88%	2.3			
								HIGH	87%	2.7			

48FC**04-07 MCA MOCP ELECTRICAL DATA

48FC UNIT SIZE	NOM. V-Ph-Hz	IFM TYPE	NO CONVENIENCE OUTLET or UNPOWERED CONVENIENCE OUTLET							
			NO POWER EXHAUST				w/ POWER EXHAUST (powered from unit)			
			MCA	FUSE OR HACR BREAKER	DISCONNECT SIZE		MCA	FUSE OR HACR BREAKER	DISCONNECT SIZE	
					FLA	LRA			FLA	LRA
**04	208/230-1-60	STD	26	30	24	94	27	40	27	96
		MED	26	30	25	95	28	40	27	97
		HIGH	29	40	28	98	30	45	30	100
	208/230-3-60	STD	19	25	19	83	21	30	21	85
		MED	20	30	20	84	22	30	22	86
		HIGH	22	30	22	87	24	30	24	89
	460-3-60	STD	10	15	9	42	11	15	10	43
		MED	10	15	9	42	11	15	10	43
		HIGH	10	15	10	42	11	15	11	43
	575-3-60	STD	7	15	6	41	9	15	9	43
		MED	7	15	6	41	9	15	9	43
		HIGH	7	15	7	41	9	15	9	43
**05	208/230-1-60	STD	31	50	30	141	33	50	32	143
		MED	34	50	32	144	35	50	35	146
		HIGH	36	50	35	147	38	50	37	149
	208/230-3-60	STD	24	30	23	94	26	30	25	96
		MED	26	30	26	97	28	40	28	99
		HIGH	25	30	24	95	26	30	26	97
	460-3-60	STD	10	15	9	45	11	15	11	46
		MED	11	15	10	45	12	15	11	46
		HIGH	12	15	11	47	13	15	12	48
	575-3-60	STD	8	15	7	37	10	15	10	39
		MED	9	15	8	37	10	15	10	39
		HIGH	9	15	9	38	11	15	11	40
**06	208/230-1-60	STD	40	60	38	158	42	60	40	160
		MED	42	60	40	161	44	60	43	163
		HIGH	44	60	43	164	46	60	45	166
	208/230-3-60	STD	29	40	28	124	31	45	31	126
		MED	31	45	31	127	33	45	33	129
		HIGH	28	40	28	123	30	45	30	125
	460-3-60	STD	13	20	12	56	14	20	13	57
		MED	13	20	12	57	14	20	13	58
		HIGH	14	20	13	58	15	20	15	59
	575-3-60	STD	10	15	9	43	12	15	11	45
		MED	10	15	10	44	12	15	12	46
		HIGH	11	15	10	45	13	15	13	47
**07	208/230-3-60	STD	33	50	32	153	35	50	35	155
		MED	29	45	28	148	31	45	30	150
		HIGH	30	45	29	149	32	45	32	151
	460-3-60	STD	14	20	13	71	15	20	14	72
		MED	14	20	14	72	15	20	15	73
		HIGH	15	20	14	72	16	20	15	73
	575-3-60	STD	11	15	10	60	13	15	12	62
		MED	11	15	11	60	13	15	13	62
		HIGH	12	15	11	61	14	15	13	63

48FC**04-07 MCA MOCP ELECTRICAL DATA (cont)

48FC UNIT SIZE	NOM. V-PH-Hz	IFM TYPE	w/ POWERED CONVENIENCE OUTLET							
			NO POWER EXHAUST				w/ POWER EXHAUST (powered from unit)			
			MCA	FUSE OR HACR BREAKER	DISCONNECT SIZE		MCA	FUSE OR HACR BREAKER	DISCONNECT SIZE	
					FLA	LRA			FLA	LRA
**04	208/230-3-60	STD	24	30	24	88	26	30	26	90
		MED	25	30	25	89	27	30	27	91
		HIGH	27	30	28	92	29	35	30	94
	460-3-60	STD	12	15	12	44	13	15	13	45
		MED	12	15	12	44	13	15	13	45
		HIGH	12	15	12	44	13	15	13	45
	575-3-60	STD	9	15	8	43	11	15	10	45
		MED	9	15	8	43	11	15	10	45
		HIGH	9	15	9	43	11	15	11	45
**05	208/230-3-60	STD	29	40	29	99	31	40	31	101
		MED	31	40	31	102	33	45	33	104
		HIGH	29	40	29	100	31	40	32	102
	460-3-60	STD	12	15	12	47	13	15	13	48
		MED	13	15	13	47	14	20	14	48
		HIGH	14	15	14	49	15	20	15	50
	575-3-60	STD	10	15	9	39	12	15	12	41
		MED	10	15	10	39	12	15	12	41
		HIGH	11	15	11	40	13	15	13	42
**06	208/230-3-60	STD	34	45	34	129	36	50	36	131
		MED	36	50	36	132	38	50	38	134
		HIGH	33	45	33	128	35	50	35	130
	460-3-60	STD	15	20	14	58	16	20	16	59
		MED	15	20	15	59	16	20	16	60
		HIGH	16	20	16	60	17	20	17	61
	575-3-60	STD	11	15	11	45	13	15	13	47
		MED	12	15	12	46	14	15	14	48
		HIGH	13	15	12	47	14	20	14	49
**07	208/230-3-60	STD	38	50	38	158	40	50	40	160
		MED	34	50	34	153	36	50	36	155
		HIGH	35	50	35	154	37	50	37	156
	460-3-60	STD	16	20	16	73	17	25	17	74
		MED	17	20	16	74	18	25	17	75
		HIGH	17	25	17	74	18	25	18	75
	575-3-60	STD	13	15	12	62	15	20	14	64
		MED	13	15	13	62	15	20	15	64
		HIGH	13	15	13	63	15	20	15	65

50FC**04 MCA MOCP ELECTRICAL DATA

50FC UNIT SIZE	NOM. V-Ph-Hz	IFM TYPE	ELECTRIC HEATER			NO CONVENIENCE OUTLET or UNPOWERED CONVENIENCE OUTLET							
						NO POWER EXHAUST				w/ POWER EXHAUST (powered from unit)			
			CRHEATER ***A00	NOM (kW)	FLA	MCA	FUSE OR HACR BRKR	DISCONNECT SIZE		MCA	FUSE OR HACR BRKR	DISCONNECT SIZE	
								FLA	LRA			FLA	LRA
**04	208/230-1-60	STD	NONE	—	—	26	30	24	94	27	40	27	96
			323A	3.3/4.4	15.9/18.3	26/29	30/30	24/26	94/94	28/31	40/40	27/28	96/96
			324A	4.9/6.5	23.5/27.1	35/40	40/40	32/36	94/94	38/42	40/45	34/38	96/96
			325A	6.5/8.7	31.4/36.3	45/51	45/60	41/47	94/94	47/54	50/60	43/49	96/96
			326A	7.9/10.5	37.9/43.8	53/61	60/70	49/55	94/94	56/63	60/70	51/58	96/96
			327A	9.8/13.0	46.9/54.2	64/74	70/80	59/67	94/94	67/76	70/80	61/69	96/96
		MED	NONE	—	—	26	30	25	95	28	40	27	97
			323A	3.3/4.4	15.9/18.3	27/30	30/30	25/27	95/95	29/32	40/40	27/29	97/97
			324A	4.9/6.5	23.5/27.1	36/41	40/45	33/37	95/95	39/43	40/45	35/39	97/97
			325A	6.5/8.7	31.4/36.3	46/52	50/60	42/48	95/95	48/55	50/60	44/50	97/97
			326A	7.9/10.5	37.9/43.8	54/62	60/70	49/56	95/95	57/64	60/70	52/58	97/97
			327A	9.8/13.0	46.9/54.2	65/75	70/80	60/68	95/95	68/77	70/80	62/70	97/97
		HIGH	NONE	—	—	29	40	28	98	30	45	30	100
			323A	3.3/4.4	15.9/18.3	29/32	40/40	28/29	98/98	32/35	45/45	30/32	100/100
			324A	4.9/6.5	23.5/27.1	39/43	40/45	35/40	98/98	41/46	45/50	38/42	100/100
			325A	6.5/8.7	31.4/36.3	49/55	50/60	45/50	98/98	51/57	60/60	47/52	100/100
			326A	7.9/10.5	37.9/43.8	57/64	60/70	52/59	98/98	59/67	60/70	54/61	100/100
			327A	9.8/13.0	46.9/54.2	68/77	70/80	62/71	98/98	71/80	80/80	65/73	100/100
	208/230-3-60	STD	NONE	—	—	19	25	19	83	21	30	21	85
			323A	3.3/4.4	9.2/10.6	19/19	25/25	19/19	83/83	21/21	30/30	21/21	85/85
			324A	4.9/6.5	13.6/15.6	23/25	25/25	21/23	83/83	25/28	30/30	23/25	85/85
			325A	6.5/8.7	18.1/20.9	28/32	30/35	26/29	83/83	31/34	35/35	28/31	85/85
			326A	7.9/10.5	21.9/25.3	33/37	35/40	30/34	83/83	36/40	40/40	32/36	85/85
			328A	12.0/16.0	33.4/38.5	48/54	50/60	43/49	83/83	50/56	50/60	46/51	85/85
		MED	NONE	—	—	20	30	20	84	22	30	22	86
			323A	3.3/4.4	9.2/10.6	20/20	30/30	20/20	84/84	22/22	30/30	22/22	86/86
			324A	4.9/6.5	13.6/15.6	24/26	30/30	22/24	84/84	26/29	30/30	24/26	86/86
			325A	6.5/8.7	18.1/20.9	29/33	30/35	27/30	84/84	32/35	35/35	29/32	86/86
			326A	7.9/10.5	21.9/25.3	34/38	35/40	31/35	84/84	37/41	40/45	33/37	86/86
			328A	12.0/16.0	33.4/38.5	49/55	50/60	44/50	84/84	51/57	60/60	46/52	86/86
		HIGH	NONE	—	—	22	30	22	87	24	30	24	89
			323A	3.3/4.4	9.2/10.6	22/23	30/30	22/22	87/87	24/25	30/30	24/24	89/89
			324A	4.9/6.5	13.6/15.6	27/29	30/30	24/26	87/87	29/31	30/35	26/29	89/89
			325A	6.5/8.7	18.1/20.9	32/36	35/40	29/32	87/87	35/38	35/40	31/35	89/89
			326A	7.9/10.5	21.9/25.3	37/41	40/45	34/37	87/87	39/44	40/45	36/40	89/89
			328A	12.0/16.0	33.4/38.5	51/58	60/60	47/53	87/87	54/60	60/60	49/55	89/89
	460-3-60	STD	NONE	—	—	10	15	9	42	11	15	10	43
			333A	6.0	7.2	11	15	10	42	12	15	11	43
			334A	8.8	10.6	15	15	14	42	16	20	15	43
			335A	11.5	13.8	19	20	17	42	20	25	18	43
			336A	14.0	16.8	23	25	21	42	24	25	22	43
		MED	NONE	—	—	10	15	9	42	11	15	10	43
			333A	6.0	7.2	11	15	10	42	12	15	11	43
			334A	8.8	10.6	15	15	14	42	16	20	15	43
			335A	11.5	13.8	19	20	17	42	20	25	18	43
			336A	14.0	16.8	23	25	21	42	24	25	22	43
		HIGH	NONE	—	—	10	15	10	42	11	15	11	43
			333A	6.0	7.2	12	15	10	42	13	15	11	43
			334A	8.8	10.6	16	20	14	42	17	20	15	43
			335A	11.5	13.8	20	20	18	42	21	25	19	43
			336A	14.0	16.8	24	25	21	42	25	25	22	43
	575-3-60	STD	NONE	—	—	7	15	6	41	9	15	9	43
			339A	10.0	9.6	14	15	12	41	16	20	14	43
			340A	15.0	14.4	20	20	18	41	22	25	20	43
		MED	NONE	—	—	7	15	6	41	9	15	9	43
			339A	10.0	9.6	14	15	12	41	16	20	14	43
			340A	15.0	14.4	20	20	18	41	22	25	20	43
		HIGH	NONE	—	—	7	15	7	41	9	15	9	43
			339A	10.0	9.6	14	15	13	41	17	20	15	43
			340A	15.0	14.4	20	20	18	41	23	25	20	43

50FC**04 MCA MOCP ELECTRICAL DATA (cont)

50FC UNIT SIZE	NOM. V-Ph-Hz	IFM TYPE	ELECTRIC HEATER			w/ POWERED CONVENIENCE OUTLET							
						NO POWER EXHAUST				w/ POWER EXHAUST (powered from unit)			
			CRHEATER ***A00	NOM (kW)	FLA	MCA	FUSE OR HACR BRKR	DISCONNECT SIZE		MCA	FUSE OR HACR BRKR	DISCONNECT SIZE	
								FLA	LRA			FLA	LRA
**04	208/230-3-60	STD	NONE	—	—	24	30	24	88	26	30	26	90
			323A	3.3/4.4	9.2/10.6	24/25	30/30	24/24	88/88	26/27	30/30	26/26	90/90
			324A	4.9/6.5	13.6/15.6	29/31	30/35	26/28	88/88	31/34	35/35	28/31	90/90
			325A	6.5/8.7	18.1/20.9	34/38	35/40	31/35	88/88	37/40	40/40	33/37	90/90
			326A	7.9/10.5	21.9/25.3	39/43	40/45	36/40	88/88	42/46	45/50	38/42	90/90
			328A	12.0/16.0	33.4/38.5	54/60	60/60	49/55	88/88	56/62	60/70	51/57	90/90
		MED	NONE	—	—	25	30	25	89	27	30	27	91
			323A	3.3/4.4	9.2/10.6	25/26	30/30	25/25	89/89	27/28	30/30	27/27	91/91
			324A	4.9/6.5	13.6/15.6	30/32	30/35	27/29	89/89	32/35	35/35	29/32	91/91
			325A	6.5/8.7	18.1/20.9	35/39	40/40	32/35	89/89	38/41	40/45	34/38	91/91
			326A	7.9/10.5	21.9/25.3	40/44	40/45	37/40	89/89	43/47	45/50	39/43	91/91
			328A	12.0/16.0	33.4/38.5	55/61	60/70	50/56	89/89	57/63	60/70	52/58	91/91
		HIGH	NONE	—	—	27	30	28	92	29	35	30	94
			323A	3.3/4.4	9.2/10.6	27/29	30/30	28/28	92/92	29/31	35/35	30/30	94/94
			324A	4.9/6.5	13.6/15.6	33/35	35/35	30/32	92/92	35/37	35/40	32/34	94/94
			325A	6.5/8.7	18.1/20.9	38/42	40/45	35/38	92/92	41/44	45/45	37/40	94/94
			326A	7.9/10.5	21.9/25.3	43/47	45/50	39/43	92/92	45/50	45/50	41/45	94/94
			328A	12.0/16.0	33.4/38.5	57/64	60/70	52/58	92/92	60/66	60/70	55/60	94/94
	460-3-60	STD	NONE	—	—	12	15	12	44	13	15	13	45
			333A	6.0	7.2	14	15	12	44	15	15	13	45
			334A	8.8	10.6	18	20	16	44	19	20	17	45
			335A	11.5	13.8	22	25	20	44	23	25	21	45
			336A	14.0	16.8	26	30	23	44	27	30	24	45
		MED	NONE	—	—	12	15	12	44	13	15	13	45
			333A	6.0	7.2	14	15	12	44	15	15	13	45
			334A	8.8	10.6	18	20	16	44	19	20	17	45
			335A	11.5	13.8	22	25	20	44	23	25	21	45
			336A	14.0	16.8	26	30	23	44	27	30	24	45
		HIGH	NONE	—	—	12	15	12	44	13	15	13	45
			333A	6.0	7.2	14	15	13	44	16	20	14	45
			334A	8.8	10.6	19	20	17	44	20	20	18	45
			335A	11.5	13.8	23	25	20	44	24	25	22	45
			336A	14.0	16.8	26	30	24	44	28	30	25	45
	575-3-60	STD	NONE	—	—	9	15	8	43	11	15	10	45
			339A	10.0	9.6	16	20	14	43	18	20	16	45
			340A	15.0	14.4	22	25	20	43	24	25	22	45
		MED	NONE	—	—	9	15	8	43	11	15	10	45
			339A	10.0	9.6	16	20	14	43	18	20	16	45
			340A	15.0	14.4	22	25	20	43	24	25	22	45
		HIGH	NONE	—	—	9	15	9	43	11	15	11	45
			339A	10.0	9.6	16	20	15	43	19	20	17	45
			340A	15.0	14.4	22	25	20	43	25	25	22	45

Electrical data (cont)

50FC**05 MCA MOCP ELECTRICAL DATA

50FC UNIT SIZE	NOM. V-Ph-Hz	IFM TYPE	ELECTRIC HEATER			NO CONVENIENCE OUTLET or UNPOWERED CONVENIENCE OUTLET							
						NO POWER EXHAUST				w/ POWER EXHAUST (powered from unit)			
			CRHEATER ***A00	NOM (kW)	FLA	MCA	FUSE OR HACR BRKR	DISCONNECT SIZE		MCA	FUSE OR HACR BRKR	DISCONNECT SIZE	
								FLA	LRA			FLA	LRA
**05	208/230-1-60	STD	NONE	—	—	31	50	30	141	33	50	32	143
			323A	3.3/4.4	15.9/18.3	31/31	50/50	30/30	141/141	33/33	50/50	32/32	143/143
			325A	6.5/8.7	31.4/36.3	46/52	50/60	42/47	141/141	48/54	50/60	44/50	143/143
			327A	9.8/13.0	46.9/54.2	65/74	70/80	60/68	141/141	68/77	70/80	62/70	143/143
			329A	13.1/17.4	62.8/72.5	85/97	90/100	78/89	141/141	88/100	90/100	80/91	143/143
			330A*	14.4/19.2	69.3/80.0	93/107	100/110	85/98	141/141	96/109	100/110	88/100	143/143
			331A†	15.8/21.0	75.8/87.5	101/116	110/125	93/106	141/141	104/118	110/125	95/109	143/143
		MED	NONE	—	—	34	50	32	144	35	50	35	146
			323A	3.3/4.4	15.9/18.3	34/34	50/50	32/32	144/144	35/35	50/50	35/35	146/146
			325A	6.5/8.7	31.4/36.3	49/55	50/60	44/50	144/144	51/57	60/60	46/52	146/146
			327A	9.8/13.0	46.9/54.2	68/77	70/80	62/70	144/144	70/79	70/80	64/73	146/146
			329A	13.1/17.4	62.8/72.5	88/100	90/100	80/92	144/144	90/102	90/110	83/94	146/146
			330A	14.4/19.2	69.3/80.0	96/109	100/110	88/100	144/144	98/112	100/125	90/102	146/146
			331A†	15.8/21.0	75.8/87.5	104/119	110/125	95/109	144/144	106/121	110/125	98/111	146/146
		HIGH	NONE	—	—	36	50	35	147	38	50	37	149
			323A	3.3/4.4	15.9/18.3	36/36	50/50	35/35	147/147	38/38	50/50	37/37	149/149
			325A	6.5/8.7	31.4/36.3	51/57	60/60	47/52	147/147	54/60	60/60	49/55	149/149
			327A	9.8/13.0	46.9/54.2	71/80	80/80	65/73	147/147	73/82	80/90	67/75	149/149
			329A	13.1/17.4	62.8/72.5	90/103	100/110	83/94	147/147	93/105	100/110	85/96	149/149
			330A*	14.4/19.2	69.3/80.0	99/112	100/125	90/103	147/147	101/114	110/125	92/105	149/149
			331A†	15.8/21.0	75.8/87.5	107/121	110/125	98/111	147/147	109/124	110/125	100/113	149/149
	208/230-3-60	STD	NONE	—	—	24	30	23	94	26	30	25	96
			323A	3.3/4.4	9.2/10.6	24/24	30/30	23/23	94/94	26/26	30/30	25/25	96/96
			324A	4.9/6.5	13.6/15.6	24/26	30/30	23/24	94/94	26/29	30/30	25/26	96/96
			325A	6.5/8.7	18.1/20.9	29/33	30/35	27/30	94/94	32/35	35/35	29/32	96/96
			328A	12.0/16.0	33.4/38.5	48/55	50/60	44/50	94/94	51/57	60/60	46/52	96/96
			330A	14.4/19.2	40.0/46.2	57/64	60/70	52/59	94/94	59/67	60/70	54/61	96/96
			331A†	15.8/21.0	43.8/50.5	61/70	70/70	56/64	94/94	64/72	70/80	58/66	96/96
		MED	NONE	—	—	26	30	26	97	28	40	28	99
			323A	3.3/4.4	9.2/10.6	26/26	30/30	26/26	97/97	28/28	40/40	28/28	99/99
			324A	4.9/6.5	13.6/15.6	26/29	30/30	26/26	97/97	29/31	40/40	28/28	99/99
			325A	6.5/8.7	18.1/20.9	32/35	35/35	29/32	97/97	34/38	40/40	31/34	99/99
			328A	12.0/16.0	33.4/38.5	51/57	60/60	47/52	97/97	53/60	60/60	49/55	99/99
			330A*	14.4/19.2	40.0/46.2	59/67	60/70	54/61	97/97	62/69	70/70	56/63	99/99
			331A†	15.8/21.0	43.8/50.5	64/72	70/80	59/66	97/97	66/75	70/80	61/68	99/99
		HIGH	NONE	—	—	25	30	24	95	26	30	26	97
			323A	3.3/4.4	9.2/10.6	25/25	30/30	24/24	95/95	26/26	30/30	26/26	97/97
			324A	4.9/6.5	13.6/15.6	25/27	30/30	24/24	95/95	27/29	30/30	26/26	97/97
			325A	6.5/8.7	18.1/20.9	30/33	30/35	27/30	95/95	32/36	35/40	29/33	97/97
			328A	12.0/16.0	33.4/38.5	49/55	50/60	45/51	95/95	51/58	60/60	47/53	97/97
			330A*	14.4/19.2	40.0/46.2	57/65	60/70	52/59	95/95	60/67	60/70	55/62	97/97
			331A†	15.8/21.0	43.8/50.5	62/70	70/80	57/64	95/95	64/73	70/80	59/67	97/97
	460-3-60	STD	NONE	—	—	10	15	9	45	11	15	11	46
			333A	6.0	7.2	11	15	10	45	12	15	11	46
			335A	11.5	13.8	19	20	17	45	20	25	18	46
			336A	14.0	16.8	23	25	21	45	24	25	22	46
			337A	21.5	25.9	34	35	31	45	36	40	32	46
		MED	NONE	—	—	11	15	10	45	12	15	11	46
			333A	6.0	7.2	12	15	10	45	13	15	11	46
			335A	11.5	13.8	20	20	18	45	21	25	19	46
			336A	14.0	16.8	24	25	21	45	25	25	22	46
			337A	21.5	25.9	35	35	32	45	36	40	33	46
		HIGH	NONE	—	—	12	15	11	47	13	15	12	48
			333A	6.0	7.2	13	15	11	47	14	15	12	48
			335A	11.5	13.8	21	25	19	47	22	25	20	48
			336A	14.0	16.8	25	25	22	47	26	30	23	48
			337A	21.5	25.9	36	40	33	47	37	40	34	48

50FC**05 MCA MOCP ELECTRICAL DATA (cont)

50FC UNIT SIZE	NOM. V-Ph-Hz	IFM TYPE	ELECTRIC HEATER			NO CONVENIENCE OUTLET or UNPOWERED CONVENIENCE OUTLET							
						NO POWER EXHAUST				w/ POWER EXHAUST (powered from unit)			
			CRHEATER ***A00	NOM (kW)	FLA	MCA	FUSE OR HACR BRKR	DISCONNECT SIZE		MCA	FUSE OR HACR BRKR	DISCONNECT SIZE	
								FLA	LRA			FLA	LRA
**05 (cont)	575-3-60	STD	NONE	—	—	8	15	7	37	10	15	10	39
			339A	10.0	9.6	14	15	12	37	16	20	14	39
			340A	15.0	14.4	20	20	18	37	22	25	20	39
		MED	NONE	—	—	9	15	8	37	10	15	10	39
			339A	10.0	9.6	14	15	13	37	17	20	15	39
			340A	15.0	14.4	20	20	18	37	23	25	20	39
		HIGH	NONE	—	—	9	15	9	38	11	15	11	40
			339A	10.0	9.6	15	15	14	38	18	20	16	40
			340A	15.0	14.4	21	25	19	38	24	25	21	40

*Do not use with size 05 horizontal duct configuration units.

†Do not use with size 05 vertical duct configuration units.

50FC**05 MCA MOCP ELECTRICAL DATA (cont)

50FC UNIT SIZE	NOM. V-Ph-Hz	IFM TYPE	ELECTRIC HEATER			w/ POWERED CONVENIENCE OUTLET							
						NO POWER EXHAUST				w/ POWER EXHAUST (powered from unit)			
			CRHEATER ***A00	NOM (kW)	FLA	MCA	FUSE OR HACR BRKR	DISCONNECT SIZE		MCA	FUSE OR HACR BRKR	DISCONNECT SIZE	
								FLA	LRA			FLA	LRA
**05	208/230-3-60	STD	NONE	—	—	29	40	29	99	31	40	31	101
			323A	3.3/4.4	9.2/10.6	29/29	40/40	29/29	99/99	31/31	40/40	31/31	101/101
			324A	4.9/6.5	13.6/15.6	30/32	40/40	29/29	99/99	32/35	40/40	31/31	101/101
			325A	6.5/8.7	18.1/20.9	35/39	40/40	32/35	99/99	38/41	40/45	34/37	101/101
			328A	12.0/16.0	33.4/38.5	54/61	60/70	50/56	99/99	57/63	60/70	52/58	101/101
			330A*	14.4/19.2	40.0/46.2	63/70	70/80	57/64	99/99	65/73	70/80	59/67	101/101
			331A†	15.8/21.0	43.8/50.5	67/76	70/80	62/69	99/99	70/78	70/80	64/72	101/101
		MED	NONE	—	—	31	40	31	102	33	45	33	104
			323A	3.3/4.4	9.2/10.6	31/31	40/40	31/31	102/102	33/33	45/45	33/33	104/104
			324A	4.9/6.5	13.6/15.6	32/35	40/40	31/32	102/102	35/37	45/45	33/34	104/104
			325A	6.5/8.7	18.1/20.9	38/41	40/45	35/38	102/102	40/44	45/45	37/40	104/104
			328A	12.0/16.0	33.4/38.5	57/63	60/70	52/58	102/102	59/66	60/70	54/60	104/104
			330A*	14.4/19.2	40.0/46.2	65/73	70/80	60/67	102/102	68/75	70/80	62/69	104/104
			331A†	15.8/21.0	43.8/50.5	70/78	70/80	64/72	102/102	72/81	80/90	66/74	104/104
		HIGH	NONE	—	—	29	40	29	100	31	40	32	102
			323A	3.3/4.4	9.2/10.6	29/29	40/40	29/29	100/100	31/31	40/40	32/32	102/102
			324A	4.9/6.5	13.6/15.6	30/33	40/40	29/30	100/100	33/35	40/40	32/32	102/102
			325A	6.5/8.7	18.1/20.9	36/39	40/40	33/36	100/100	38/42	40/45	35/38	102/102
			328A	12.0/16.0	33.4/38.5	55/61	60/70	50/56	100/100	57/64	60/70	52/58	102/102
			330A*	14.4/19.2	40.0/46.2	63/71	70/80	58/65	100/100	66/73	70/80	60/67	102/102
			331A†	15.8/21.0	43.8/50.5	68/76	70/80	62/70	100/100	70/79	80/80	64/72	102/102
	460-3-60	STD	NONE	—	—	12	15	12	47	13	15	13	48
			333A	6.0	7.2	14	15	12	47	15	15	13	48
			335A	11.5	13.8	22	25	20	47	23	25	21	48
			336A	14.0	16.8	26	30	23	47	27	30	24	48
			337A	21.5	25.9	37	40	34	47	38	40	35	48
		MED	NONE	—	—	13	15	13	47	14	20	14	48
			333A	6.0	7.2	14	15	13	47	16	20	14	48
			335A	11.5	13.8	23	25	20	47	24	25	22	48
			336A	14.0	16.8	26	30	24	47	28	30	25	48
			337A	21.5	25.9	38	40	34	47	39	40	35	48
		HIGH	NONE	—	—	14	15	14	49	15	20	15	50
			333A	6.0	7.2	15	15	14	49	17	20	15	50
			335A	11.5	13.8	24	25	21	49	25	25	23	50
			336A	14.0	16.8	27	30	25	49	29	30	26	50
			337A	21.5	25.9	39	40	35	49	40	40	36	50
	575-3-60	STD	NONE	—	—	10	15	9	39	12	15	12	41
			339A	10.0	9.6	16	20	14	39	18	20	16	41
			340A	15.0	14.4	22	25	20	39	24	25	22	41
		MED	NONE	—	—	10	15	10	39	12	15	12	41
			339A	10.0	9.6	16	20	15	39	19	20	17	41
			340A	15.0	14.4	22	25	20	39	25	25	22	41
		HIGH	NONE	—	—	11	15	11	40	13	15	13	42
			339A	10.0	9.6	17	20	16	40	20	20	18	42
			340A	15.0	14.4	23	25	21	40	26	30	23	42

*Do not use with size 05 horizontal duct configuration units.

†Do not use with size 05 vertical duct configuration units.

50FC**06 MCA MOCP ELECTRICAL DATA

50FC UNIT SIZE	NOM. V-Ph-Hz	IFM TYPE	ELECTRIC HEATER			NO CONVENIENCE OUTLET or UNPOWERED CONVENIENCE OUTLET							
						NO POWER EXHAUST				w/ POWER EXHAUST (powered from unit)			
			CRHEATER ***A00	NOM (kW)	FLA	MCA	FUSE OR HACR BRKR	DISCONNECT SIZE		MCA	FUSE OR HACR BRKR	DISCONNECT SIZE	
								FLA	LRA			FLA	LRA
**06	208/230-1-60	STD	NONE	—	—	40	60	38	158	42	60	40	160
			324A	4.9/6.5	23.5/27.1	40/43	60/60	38/39	158/158	42/46	60/60	40/42	160/160
			325A	6.5/8.7	31.4/36.3	49/55	60/60	44/50	158/158	51/57	60/60	47/52	160/160
			327A	9.8/13.0	46.9/54.2	68/77	70/80	62/71	158/158	70/80	80/80	64/73	160/160
			329A	13.1/17.4	62.8/72.5	88/100	90/100	81/92	158/158	90/102	90/110	83/94	160/160
			331A	15.8/21.0	75.8/87.5	104/119	110/125	95/109	158/158	107/121	110/125	98/111	160/160
		MED	NONE	—	—	42	60	40	161	44	60	43	163
			324A	4.9/6.5	23.5/27.1	42/46	60/60	40/42	161/161	44/48	60/60	43/44	163/163
			325A	6.5/8.7	31.4/36.3	51/57	60/60	47/52	161/161	54/60	60/60	49/55	163/163
			327A	9.8/13.0	46.9/54.2	71/80	80/80	65/73	161/161	73/82	80/90	67/75	163/163
			329A	13.1/17.4	62.8/72.5	90/103	100/110	83/94	161/161	93/105	100/110	85/96	163/163
			331A	15.8/21.0	75.8/87.5	107/121	110/125	98/111	161/161	109/124	110/125	100/113	163/163
	208/230-3-60	STD	NONE	—	—	29	40	28	124	31	45	31	126
			324A	4.9/6.5	13.6/15.6	29/29	40/40	28/28	124/124	31/31	45/45	31/31	126/126
			326A	7.9/10.5	21.9/25.3	37/41	40/45	33/37	124/124	39/43	45/45	36/40	126/126
			328A	12.0/16.0	33.4/38.5	51/58	60/60	47/53	124/124	54/60	60/60	49/55	126/126
			331A	15.8/21.0	43.8/50.5	64/73	70/80	59/66	124/124	67/75	70/80	61/69	126/126
			332A	18.4/24.5	51.1/58.9	73/83	80/90	67/76	124/124	76/85	80/90	69/78	126/126
		MED	NONE	—	—	31	45	31	127	33	45	33	129
			324A	4.9/6.5	13.6/15.6	31/31	45/45	31/31	127/127	33/34	45/45	33/33	129/129
			326A	7.9/10.5	21.9/25.3	39/44	45/45	36/40	127/127	42/46	45/50	38/42	129/129
			328A	12.0/16.0	33.4/38.5	54/60	60/60	49/55	127/127	56/62	60/70	51/57	129/129
			331A	15.8/21.0	43.8/50.5	67/75	70/80	61/69	127/127	69/77	70/80	63/71	129/129
			332A	18.4/24.5	51.1/58.9	76/86	80/90	69/78	127/127	78/88	80/90	72/81	129/129
		HIGH	NONE	—	—	28	40	28	123	30	45	30	125
			324A	4.9/6.5	13.6/15.6	28/28	40/40	28/28	123/123	30/30	45/45	30/30	125/125
			326A	7.9/10.5	21.9/25.3	36/40	40/40	33/37	123/123	38/43	45/45	35/39	125/125
			328A	12.0/16.0	33.4/38.5	50/57	50/60	46/52	123/123	53/59	60/60	48/54	125/125
			331A	15.8/21.0	43.8/50.5	63/72	70/80	58/66	123/123	66/74	70/80	60/68	125/125
			332A	18.4/24.5	51.1/58.9	72/82	80/90	66/75	123/123	75/85	80/90	68/77	125/125
	460-3-60	STD	NONE	—	—	13	20	12	56	14	20	13	57
			333A	6.0	7.2	13	20	12	56	14	20	13	57
			335A	11.5	13.8	20	20	18	56	21	25	19	57
			336A	14.0	16.8	24	25	21	56	25	25	22	57
			337A	21.5	25.9	35	35	32	56	36	40	33	57
			338A	24.0	28.9	39	40	35	56	40	40	36	57
		MED	NONE	—	—	13	20	12	57	14	20	13	58
			333A	6.0	7.2	13	20	12	57	14	20	13	58
			335A	11.5	13.8	20	20	18	57	22	25	19	58
			336A	14.0	16.8	24	25	22	57	25	25	23	58
			337A	21.5	25.9	35	40	32	57	37	40	33	58
			338A	24.0	28.9	39	40	36	57	40	45	37	58
		HIGH	NONE	—	—	14	20	13	58	15	20	15	59
			333A	6.0	7.2	14	20	13	58	15	20	15	59
			335A	11.5	13.8	22	25	19	58	23	25	21	59
			336A	14.0	16.8	25	25	23	58	27	30	24	59
			337A	21.5	25.9	37	40	33	58	38	40	35	59
			338A	24.0	28.9	40	45	37	58	42	45	38	59
	575-3-60	STD	NONE	—	—	10	15	9	43	12	15	11	45
			340A	15.0	14.4	20	20	18	43	23	25	20	45
			341A	21.0	20.2	28	30	25	43	30	30	27	45
		MED	NONE	—	—	10	15	10	44	12	15	12	46
			340A	15.0	14.4	21	25	19	44	23	25	21	46
			341A	21.0	20.2	28	30	26	44	31	35	28	46
		HIGH	NONE	—	—	11	15	10	45	13	15	13	47
			340A	15.0	14.4	22	25	20	45	24	25	22	47
			341A	21.0	20.2	29	30	26	45	31	35	29	47

50FC**06 MCA MOCP ELECTRICAL DATA (cont)

50FC UNIT SIZE	NOM. V-Ph-Hz	IFM TYPE	ELECTRIC HEATER			w/ POWERED CONVENIENCE OUTLET							
						NO POWER EXHAUST				w/ POWER EXHAUST (powered from unit)			
			CRHEATER ***A00	NOM (kW)	FLA	MCA	FUSE OR HACR BRKR	DISCONNECT SIZE		MCA	FUSE OR HACR BRKR	DISCONNECT SIZE	
								FLA	LRA			FLA	LRA
**06	208/230-3-60	STD	NONE	—	—	34	45	34	129	36	50	36	131
			324A	4.9/6.5	13.6/15.6	34/35	45/45	34/34	129/129	36/37	50/50	36/36	131/131
			326A	7.9/10.5	21.9/25.3	43/47	45/50	39/43	129/129	45/49	50/50	41/45	131/131
			328A	12.0/16.0	33.4/38.5	57/64	60/70	52/58	129/129	60/66	60/70	54/60	131/131
			331A	15.8/21.0	43.8/50.5	70/79	70/80	64/72	129/129	73/81	80/90	66/74	131/131
			332A	18.4/24.5	51.1/58.9	79/89	80/90	73/82	129/129	82/91	90/100	75/84	131/131
		MED	NONE	—	—	36	50	36	132	38	50	38	134
			324A	4.9/6.5	13.6/15.6	36/37	50/50	36/36	132/132	38/40	50/50	38/38	134/134
			326A	7.9/10.5	21.9/25.3	45/50	50/50	41/45	132/132	48/52	50/60	43/47	134/134
			328A	12.0/16.0	33.4/38.5	60/66	60/70	55/60	132/132	62/68	70/70	57/63	134/134
			331A	15.8/21.0	43.8/50.5	73/81	80/90	66/74	132/132	75/83	80/90	69/76	134/134
			332A	18.4/24.5	51.1/58.9	82/92	90/100	75/84	132/132	84/94	90/100	77/86	134/134
		HIGH	NONE	—	—	33	45	33	128	35	50	35	130
			324A	4.9/6.5	13.6/15.6	33/34	45/45	33/33	128/128	35/36	50/50	35/35	130/130
			326A	7.9/10.5	21.9/25.3	42/46	45/50	38/42	128/128	44/49	50/50	40/44	130/130
			328A	12.0/16.0	33.4/38.5	56/63	60/70	51/57	128/128	59/65	60/70	54/59	130/130
			331A	15.8/21.0	43.8/50.5	69/78	70/80	63/71	128/128	72/80	80/80	66/73	130/130
			332A	18.4/24.5	51.1/58.9	78/88	80/90	72/81	128/128	81/91	90/100	74/83	130/130
	460-3-60	STD	NONE	—	—	15	20	14	58	16	20	16	59
			333A	6.0	7.2	15	20	14	58	16	20	16	59
			335A	11.5	13.8	23	25	20	58	24	25	22	59
			336A	14.0	16.8	26	30	24	58	28	30	25	59
			337A	21.5	25.9	38	40	34	58	39	40	35	59
			338A	24.0	28.9	41	45	38	58	43	45	39	59
		MED	NONE	—	—	15	20	15	59	16	20	16	60
			333A	6.0	7.2	15	20	15	59	16	20	16	60
			335A	11.5	13.8	23	25	21	59	24	25	22	60
			336A	14.0	16.8	27	30	24	59	28	30	25	60
			337A	21.5	25.9	38	40	35	59	39	40	36	60
			338A	24.0	28.9	42	45	38	59	43	45	39	60
		HIGH	NONE	—	—	16	20	16	60	17	20	17	61
			333A	6.0	7.2	16	20	16	60	17	20	17	61
			335A	11.5	13.8	24	25	22	60	26	30	23	61
			336A	14.0	16.8	28	30	25	60	29	30	27	61
			337A	21.5	25.9	39	40	36	60	41	45	37	61
			338A	24.0	28.9	43	45	39	60	44	45	40	61
	575-3-60	STD	NONE	—	—	11	15	11	45	13	15	13	47
			340A	15.0	14.4	22	25	20	45	25	25	22	47
			341A	21.0	20.2	30	30	27	45	32	35	29	47
		MED	NONE	—	—	12	15	12	46	14	15	14	48
			340A	15.0	14.4	23	25	21	46	25	30	23	48
			341A	21.0	20.2	30	30	27	46	33	35	30	48
		HIGH	NONE	—	—	13	15	12	47	14	20	14	49
			340A	15.0	14.4	24	25	22	47	26	30	24	49
			341A	21.0	20.2	31	35	28	47	34	35	30	49

50FC**07 MCA MOCP ELECTRICAL DATA

50FC UNIT SIZE	NOM. V-Ph-Hz	IFM TYPE	ELECTRIC HEATER			NO CONVENIENCE OUTLET or UNPOWERED CONVENIENCE OUTLET							
						NO POWER EXHAUST				w/ POWER EXHAUST (powered from unit)			
			CRHEATER ***A00	NOM (kW)	FLA	MCA	FUSE OR HACR BRKR	DISCONNECT SIZE		MCA	FUSE OR HACR BRKR	DISCONNECT SIZE	
								FLA	LRA			FLA	LRA
**07	208/230-3-60	STD	NONE	—	—	33	50	32	153	35	50	35	155
			324A	4.9/6.5	13.6/15.6	33/33	50/50	32/32	153/153	35/35	50/50	35/35	155/155
			326A	7.9/10.5	21.9/25.3	39/44	50/50	36/40	153/153	42/46	50/50	38/42	155/155
			328A	12.0/16.0	33.4/38.5	54/60	60/60	49/55	153/153	56/62	60/70	51/57	155/155
			331A	15.8/21.0	43.8/50.5	67/75	70/80	61/69	153/153	69/77	70/80	63/71	155/155
			332A	18.4/24.5	51.1/58.9	76/86	80/90	69/78	153/153	78/88	80/90	72/81	155/155
		MED	NONE	—	—	29	45	28	148	31	45	30	150
			324A	4.9/6.5	13.6/15.6	29/29	45/45	28/28	148/148	31/31	45/45	30/30	150/150
			326A	7.9/10.5	21.9/25.3	35/39	45/45	32/35	148/148	37/41	45/45	34/38	150/150
			328A	12.0/16.0	33.4/38.5	49/55	50/60	45/51	148/148	51/58	60/60	47/53	150/150
			331A	15.8/21.0	43.8/50.5	62/70	70/80	57/64	148/148	64/73	70/80	59/67	150/150
			332A	18.4/24.5	51.1/58.9	71/81	80/90	65/74	148/148	74/83	80/90	67/76	150/150
		HIGH	NONE	—	—	30	45	29	149	32	45	32	151
			324A	4.9/6.5	13.6/15.6	30/30	45/45	29/29	149/149	32/32	45/45	32/32	151/151
			326A	7.9/10.5	21.9/25.3	36/40	45/45	33/37	149/149	38/43	45/45	35/39	151/151
			328A	12.0/16.0	33.4/38.5	50/57	50/60	46/52	149/149	53/59	60/60	48/54	151/151
			331A	15.8/21.0	43.8/50.5	63/72	70/80	58/66	149/149	66/74	70/80	60/68	151/151
			332A	18.4/24.5	51.1/58.9	72/82	80/90	66/75	149/149	75/85	80/90	68/77	151/151
	460-3-60	STD	NONE	—	—	14	20	13	71	15	20	14	72
			333A	6.0	7.2	14	20	13	71	15	20	14	72
			335A	11.5	13.8	20	20	18	71	22	25	19	72
			336A	14.0	16.8	24	25	22	71	25	25	23	72
			337A	21.5	25.9	35	40	32	71	37	40	33	72
			338A	24.0	28.9	39	40	36	71	40	45	37	72
		MED	NONE	—	—	14	20	14	72	15	20	15	73
			333A	6.0	7.2	14	20	14	72	15	20	15	73
			335A	11.5	13.8	21	25	19	72	22	25	20	73
			336A	14.0	16.8	25	25	22	72	26	30	23	73
			337A	21.5	25.9	36	40	33	72	37	40	34	73
			338A	24.0	28.9	40	40	36	72	41	45	37	73
		HIGH	NONE	—	—	15	20	14	72	16	20	15	73
			333A	6.0	7.2	15	20	14	72	16	20	15	73
			335A	11.5	13.8	22	25	19	72	23	25	21	73
			336A	14.0	16.8	25	25	23	72	27	30	24	73
			337A	21.5	25.9	37	40	33	72	38	40	35	73
			338A	24.0	28.9	40	45	37	72	42	45	38	73
	575-3-60	STD	NONE	—	—	11	15	10	60	13	15	12	62
			340A	15.0	14.4	21	25	19	60	23	25	21	62
			341A	21.0	20.2	28	30	26	60	31	35	28	62
		MED	NONE	—	—	11	15	11	60	13	15	13	62
			340A	15.0	14.4	21	25	19	60	24	25	21	62
			341A	21.0	20.2	29	30	26	60	31	35	28	62
		HIGH	NONE	—	—	12	15	11	61	14	15	13	63
			340A	15.0	14.4	22	25	20	61	24	25	22	63
			341A	21.0	20.2	29	30	26	61	31	35	29	63

50FC**07 MCA MOCP ELECTRICAL DATA (cont)

50FC UNIT SIZE	NOM. V-Ph-Hz	IFM TYPE	ELECTRIC HEATER			w/ POWERED CONVENIENCE OUTLET							
						NO POWER EXHAUST				w/ POWER EXHAUST (powered from unit)			
			CRHEATER ***A00	NOM (kW)	FLA	MCA	FUSE OR HACR BRKR	DISCONNECT SIZE		MCA	FUSE OR HACR BRKR	DISCONNECT SIZE	
								FLA	LRA			FLA	LRA
**07	208/230-3-60	STD	NONE	—	—	38	50	38	158	40	50	40	160
			324A	4.9/6.5	13.6/15.6	38/38	50/50	38/38	158/158	40/40	50/50	40/40	160/160
			326A	7.9/10.5	21.9/25.3	45/50	50/50	41/45	158/158	48/52	50/60	43/47	160/160
			328A	12.0/16.0	33.4/38.5	60/66	60/70	55/60	158/158	62/68	70/70	57/63	160/160
			331A	15.8/21.0	43.8/50.5	73/81	80/90	66/74	158/158	75/83	80/90	69/76	160/160
			332A	18.4/24.5	51.1/58.9	82/92	90/100	75/84	158/158	84/94	90/100	77/86	160/160
		MED	NONE	—	—	34	50	34	153	36	50	36	155
			324A	4.9/6.5	13.6/15.6	34/34	50/50	34/34	153/153	36/36	50/50	36/36	155/155
			326A	7.9/10.5	21.9/25.3	41/45	50/50	37/41	153/153	43/47	50/50	39/43	155/155
			328A	12.0/16.0	33.4/38.5	55/61	60/70	50/56	153/153	57/64	60/70	52/58	155/155
			331A	15.8/21.0	43.8/50.5	68/76	70/80	62/70	153/153	70/79	80/80	64/72	155/155
			332A	18.4/24.5	51.1/58.9	77/87	80/90	71/80	153/153	80/89	80/90	73/82	155/155
		HIGH	NONE	—	—	35	50	35	154	37	50	37	156
			324A	4.9/6.5	13.6/15.6	35/35	50/50	35/35	154/154	37/37	50/50	37/37	156/156
			326A	7.9/10.5	21.9/25.3	42/46	50/50	38/42	154/154	44/49	50/50	40/44	156/156
			328A	12.0/16.0	33.4/38.5	56/63	60/70	51/57	154/154	59/65	60/70	54/59	156/156
			331A	15.8/21.0	43.8/50.5	69/78	70/80	63/71	154/154	72/80	80/80	66/73	156/156
			332A	18.4/24.5	51.1/58.9	78/88	80/90	72/81	154/154	81/91	90/100	74/83	156/156
	460-3-60	STD	NONE	—	—	16	20	16	73	17	25	17	74
			333A	6.0	7.2	16	20	16	73	17	25	17	74
			335A	11.5	13.8	23	25	21	73	24	25	22	74
			336A	14.0	16.8	27	30	24	73	28	30	25	74
			337A	21.5	25.9	38	40	35	73	39	40	36	74
			338A	24.0	28.9	42	45	38	73	43	45	39	74
		MED	NONE	—	—	17	20	16	74	18	25	17	75
			333A	6.0	7.2	17	20	16	74	18	25	17	75
			335A	11.5	13.8	24	25	21	74	25	25	23	75
			336A	14.0	16.8	27	30	25	74	29	30	26	75
			337A	21.5	25.9	39	40	35	74	40	40	36	75
			338A	24.0	28.9	43	45	39	74	44	45	40	75
		HIGH	NONE	—	—	17	25	17	74	18	25	18	75
			333A	6.0	7.2	17	25	17	74	18	25	18	75
			335A	11.5	13.8	24	25	22	74	26	30	23	75
			336A	14.0	16.8	28	30	25	74	29	30	27	75
			337A	21.5	25.9	39	40	36	74	41	45	37	75
			338A	24.0	28.9	43	45	39	74	44	45	40	75
	575-3-60	STD	NONE	—	—	13	15	12	62	15	20	14	64
			340A	15.0	14.4	23	25	21	62	25	30	23	64
			341A	21.0	20.2	30	30	27	62	33	35	30	64
		MED	NONE	—	—	13	15	13	62	15	20	15	64
			340A	15.0	14.4	23	25	21	62	26	30	23	64
			341A	21.0	20.2	31	35	28	62	33	35	30	64
		HIGH	NONE	—	—	13	15	13	63	15	20	15	65
			340A	15.0	14.4	24	25	22	63	26	30	24	65
			341A	21.0	20.2	31	35	28	63	34	35	30	65

50FC**04 ELECTRIC HEAT DATA — WITHOUT NON-FUSED DISCONNECT

50FC UNIT SIZE	NOM. V-Ph-Hz	IFM TYPE	ELECTRIC HEATER PART NUMBER	NOM (kW)	APPLICATION (kW)	APPLICATION OUTPUT (MBH)	SINGLE POINT OR JUNCTION PART NUMBER CRSINGLEXXXA00			
							NO C.O. OR UNPOWERED C.O.		w/PWRD C.O.	
							NO P.E.	w/P.E. (pwrd fr/unit)	NO P.E	w/P.E. (pwrd fr/unit)
**04	208/230-1-60	STD	CRHEATER323A00	4.4	3.3/4.0	11.3/13.8	—	—	—	—
			CRHEATER324A00	6.5	4.9/6.0	16.7/20.4	—	—	—	—
			CRHEATER325A00	8.7	6.5/8.0	22.3/27.3	—	037	037	037
			CRHEATER326A00	10.5	7.9/9.6	26.9/32.9	037	040	040	040
			CRHEATER327A00	13.0	9.8/11.9	33.3/40.7	040	040	040	040
		MED	CRHEATER323A00	4.4	3.3/4.0	11.3/13.8	—	—	—	—
			CRHEATER324A00	6.5	4.9/6.0	16.7/20.4	—	—	—	—
			CRHEATER325A00	8.7	6.5/8.0	22.3/27.3	037	037	037	040
			CRHEATER326A00	10.5	7.9/9.6	26.9/32.9	040	040	040	040
			CRHEATER327A00	13.0	9.8/11.9	33.3/40.7	040	040	040	040
		HIGH	CRHEATER323A00	4.4	3.3/4.0	11.3/13.8	—	—	—	—
			CRHEATER324A00	6.5	4.9/6.0	16.7/20.4	—	—	—	037
			CRHEATER325A00	8.7	6.5/8.0	22.3/27.3	037	037	040	040
			CRHEATER326A00	10.5	7.9/9.6	26.9/32.9	040	040	040	040
			CRHEATER327A00	13.0	9.8/11.9	33.3/40.7	040	040	040	040
	208/230-3-60	STD	CRHEATER323A00	4.4	3.3/4.0	11.3/13.8	—	—	—	—
			CRHEATER324A00	6.5	4.9/6.0	16.7/20.4	—	—	—	—
			CRHEATER325A00	8.7	6.5/8.0	22.3/27.3	—	—	—	—
			CRHEATER326A00	10.5	7.9/9.6	26.9/32.9	—	—	—	—
			CRHEATER328A00	16.0	12.0/14.7	41.0/50.1	037	037	037	038
		MED	CRHEATER323A00	4.4	3.3/4.0	11.3/13.8	—	—	—	—
			CRHEATER324A00	6.5	4.9/6.0	16.7/20.4	—	—	—	—
			CRHEATER325A00	8.7	6.5/8.0	22.3/27.3	—	—	—	—
			CRHEATER326A00	10.5	7.9/9.6	26.9/32.9	—	—	—	—
			CRHEATER328A00	16.0	12.0/14.7	41.0/50.1	037	037	038	038
		HIGH	CRHEATER323A00	4.4	3.3/4.0	11.3/13.8	—	—	—	—
			CRHEATER324A00	6.5	4.9/6.0	16.7/20.4	—	—	—	—
			CRHEATER325A00	8.7	6.5/8.0	22.3/27.3	—	—	—	—
			CRHEATER326A00	10.5	7.9/9.6	26.9/32.9	—	—	—	—
			CRHEATER328A00	16.0	12.0/14.7	41.0/50.1	037	037	038	038
	460-3-60	STD	CRHEATER333A00	6.0	5.5	18.8	—	—	—	—
			CRHEATER334A00	8.8	8.1	27.6	—	—	—	—
			CRHEATER335A00	11.5	10.6	36.0	—	—	—	—
			CRHEATER336A00	14.0	12.9	43.9	—	—	—	—
		MED	CRHEATER333A00	6.0	5.5	18.8	—	—	—	—
			CRHEATER334A00	8.8	8.1	27.6	—	—	—	—
			CRHEATER335A00	11.5	10.6	36.0	—	—	—	—
			CRHEATER336A00	14.0	12.9	43.9	—	—	—	—
		HIGH	CRHEATER333A00	6.0	5.5	18.8	—	—	—	—
			CRHEATER334A00	8.8	8.1	27.6	—	—	—	—
			CRHEATER335A00	11.5	10.6	36.0	—	—	—	—
			CRHEATER336A00	14.0	12.9	43.9	—	—	—	—
	575-3-60	STD	CRHEATER339A00	10.0	9.2	31.3	—	—	—	—
			CRHEATER340A00	15.0	13.8	47.0	—	—	—	—
		MED	CRHEATER339A00	10.0	9.2	31.3	—	—	—	—
			CRHEATER340A00	15.0	13.8	47.0	—	—	—	—
		HIGH	CRHEATER339A00	10.0	9.2	31.3	—	—	—	—
			CRHEATER340A00	15.0	13.8	47.0	—	—	—	—

50FC**04 ELECTRIC HEAT DATA — WITH NON-FUSED DISCONNECT

50FC UNIT SIZE	NOM. V-Ph-Hz	IFM TYPE	ELECTRIC HEATER PART NUMBER	NOM (kW)	APPLICATION (kW)	APPLICATION OUTPUT (MBH)	SINGLE POINT OR JUNCTION PART NUMBER CRSINGLEXXXA00			
							NO C.O. OR UNPOWERED C.O.		w/PWRD C.O.	
							NO P.E.	w/P.E. (pwrd fr/unit)	NO P.E	w/P.E. (pwrd fr/unit)
**04	208/230-1-60	STD	CRHEATER323A00	4.4	3.3/4.0	11.3/13.8	037	037	—	—
			CRHEATER324A00	6.5	4.9/6.0	16.7/20.4	037	037	—	—
			CRHEATER325A00	8.7	6.5/8.0	22.3/27.3	037	037	—	—
			CRHEATER326A00	10.5	7.9/9.6	26.9/32.9	037	040	—	—
			CRHEATER327A00	13.0	9.8/11.9	33.3/40.7	040	040	—	—
		MED	CRHEATER323A00	4.4	3.3/4.0	11.3/13.8	037	037	—	—
			CRHEATER324A00	6.5	4.9/6.0	16.7/20.4	037	037	—	—
			CRHEATER325A00	8.7	6.5/8.0	22.3/27.3	037	037	—	—
			CRHEATER326A00	10.5	7.9/9.6	26.9/32.9	040	040	—	—
			CRHEATER327A00	13.0	9.8/11.9	33.3/40.7	040	040	—	—
		HIGH	CRHEATER323A00	4.4	3.3/4.0	11.3/13.8	037	037	—	—
			CRHEATER324A00	6.5	4.9/6.0	16.7/20.4	037	037	—	—
			CRHEATER325A00	8.7	6.5/8.0	22.3/27.3	037	037	—	—
			CRHEATER326A00	10.5	7.9/9.6	26.9/32.9	040	040	—	—
			CRHEATER327A00	13.0	9.8/11.9	33.3/40.7	040	040	—	—
	208/230-3-60	STD	CRHEATER323A00	4.4	3.3/4.0	11.3/13.8	037	037	037	037
			CRHEATER324A00	6.5	4.9/6.0	16.7/20.4	037	037	037	037
			CRHEATER325A00	8.7	6.5/8.0	22.3/27.3	037	037	037	037
			CRHEATER326A00	10.5	7.9/9.6	26.9/32.9	037	037	037	037
			CRHEATER328A00	16.0	12.0/14.7	41.0/50.1	037	037	037	038
		MED	CRHEATER323A00	4.4	3.3/4.0	11.3/13.8	037	037	037	037
			CRHEATER324A00	6.5	4.9/6.0	16.7/20.4	037	037	037	037
			CRHEATER325A00	8.7	6.5/8.0	22.3/27.3	037	037	037	037
			CRHEATER326A00	10.5	7.9/9.6	26.9/32.9	037	037	037	037
			CRHEATER328A00	16.0	12.0/14.7	41.0/50.1	037	037	038	038
		HIGH	CRHEATER323A00	4.4	3.3/4.0	11.3/13.8	037	037	037	037
			CRHEATER324A00	6.5	4.9/6.0	16.7/20.4	037	037	037	037
			CRHEATER325A00	8.7	6.5/8.0	22.3/27.3	037	037	037	037
			CRHEATER326A00	10.5	7.9/9.6	26.9/32.9	037	037	037	037
			CRHEATER328A00	16.0	12.0/14.7	41.0/50.1	037	037	038	038
	460-3-60	STD	CRHEATER333A00	6.0	5.5	18.8	—	—	—	—
			CRHEATER334A00	8.8	8.1	27.6	—	—	—	—
			CRHEATER335A00	11.5	10.6	36.0	—	—	—	—
			CRHEATER336A00	14.0	12.9	43.9	—	—	—	—
		MED	CRHEATER333A00	6.0	5.5	18.8	—	—	—	—
			CRHEATER334A00	8.8	8.1	27.6	—	—	—	—
			CRHEATER335A00	11.5	10.6	36.0	—	—	—	—
			CRHEATER336A00	14.0	12.9	43.9	—	—	—	—
		HIGH	CRHEATER333A00	6.0	5.5	18.8	—	—	—	—
			CRHEATER334A00	8.8	8.1	27.6	—	—	—	—
			CRHEATER335A00	11.5	10.6	36.0	—	—	—	—
			CRHEATER336A00	14.0	12.9	43.9	—	—	—	—
	575-3-60	STD	CRHEATER339A00	10.0	9.2	31.3	—	—	—	—
			CRHEATER340A00	15.0	13.8	47.0	—	—	—	—
		MED	CRHEATER339A00	10.0	9.2	31.3	—	—	—	—
			CRHEATER340A00	15.0	13.8	47.0	—	—	—	—
		HIGH	CRHEATER339A00	10.0	9.2	31.3	—	—	—	—
			CRHEATER340A00	15.0	13.8	47.0	—	—	—	—

50FC**05 ELECTRIC HEAT DATA — WITHOUT NON-FUSED DISCONNECT

50FC UNIT SIZE	NOM. V-Ph-Hz	IFM TYPE	ELECTRIC HEATER PART NUMBER	NOM (kW)	APPLICATION (kW)	APPLICATION OUTPUT (MBH)	SINGLE POINT OR JUNCTION PART NUMBER CRSINGLEXXXA00			
							NO C.O. OR UNPOWERED C.O.		w/PWRD C.O.	
							NO P.E.	w/P.E. (pwrd fr/unit)	NO P.E	w/P.E. (pwrd fr/unit)
**05	208/230-1-60	STD	CRHEATER323A00	4.4	3.3/4.0	11.3/13.8	—	—	—	—
			CRHEATER325A00	8.7	6.5/8.0	22.3/27.3	037	037	—	—
			CRHEATER327A00	13.0	9.8/11.9	33.3/40.7	040	040	—	—
			CRHEATER329A00	17.4	13.1/16.0	44.6/54.5	040	040	—	—
			CRHEATER330A00	19.2	14.4/17.6	49.2/60.2	040	040	—	—
			CRHEATER331A00	21.0	15.8/19.3	53.8/65.8	040	040	—	—
		MED	CRHEATER323A00	4.4	3.3/4.0	11.3/13.8	—	—	—	—
			CRHEATER325A00	8.7	6.5/8.0	22.3/27.3	037	037	—	—
			CRHEATER327A00	13.0	9.8/11.9	33.3/40.7	040	040	—	—
			CRHEATER329A00	17.4	13.1/16.0	44.6/54.5	040	040	—	—
			CRHEATER330A00	19.2	14.4/17.6	49.2/60.2	040	040	—	—
			CRHEATER331A00	21.0	15.8/19.3	53.8/65.8	040	040	—	—
		HIGH	CRHEATER323A00	4.4	3.3/4.0	11.3/13.8	—	—	—	—
			CRHEATER325A00	8.7	6.5/8.0	22.3/27.3	037	037	—	—
			CRHEATER327A00	13.0	9.8/11.9	33.3/40.7	040	040	—	—
			CRHEATER329A00	17.4	13.1/16.0	44.6/54.5	040	040	—	—
			CRHEATER330A00	19.2	14.4/17.6	49.2/60.2	040	040	—	—
			CRHEATER331A00	21.0	15.8/19.3	53.8/65.8	040	040	—	—
	208/230-3-60	STD	CRHEATER323A00	4.4	3.3/4.0	11.3/13.8	—	—	—	—
			CRHEATER324A00	6.5	4.9/6.0	16.7/20.4	—	—	—	—
			CRHEATER325A00	8.7	6.5/8.0	22.3/27.3	—	—	—	—
			CRHEATER328A00	16.0	12.0/14.7	41.0/50.1	037	037	038	038
			CRHEATER330A00	19.2	14.4/17.6	49.2/60.2	038	038	038	038
			CRHEATER331A00	21.0	15.8/19.3	53.8/65.8	038	038	038	038
		MED	CRHEATER323A00	4.4	3.3/4.0	11.3/13.8	—	—	—	—
			CRHEATER324A00	6.5	4.9/6.0	16.7/20.4	—	—	—	—
			CRHEATER325A00	8.7	6.5/8.0	22.3/27.3	—	—	—	—
			CRHEATER328A00	16.0	12.0/14.7	41.0/50.1	037	037	038	038
			CRHEATER330A00	19.2	14.4/17.6	49.2/60.2	038	038	038	038
			CRHEATER331A00	21.0	15.8/19.3	53.8/65.8	038	038	038	038
		HIGH	CRHEATER323A00	4.4	3.3/4.0	11.3/13.8	—	—	—	—
			CRHEATER324A00	6.5	4.9/6.0	16.7/20.4	—	—	—	—
			CRHEATER325A00	8.7	6.5/8.0	22.3/27.3	—	—	—	—
			CRHEATER328A00	16.0	12.0/14.7	41.0/50.1	037	037	038	038
			CRHEATER330A00	19.2	14.4/17.6	49.2/60.2	038	038	038	038
			CRHEATER331A00	21.0	15.8/19.3	53.8/65.8	038	038	038	038
	460-3-60	STD	CRHEATER333A00	6.0	5.5	18.8	—	—	—	—
			CRHEATER335A00	11.5	10.6	36.0	—	—	—	—
			CRHEATER336A00	14.0	12.9	43.9	—	—	—	—
			CRHEATER337A00	21.5	19.7	67.4	037	037	037	037
		MED	CRHEATER333A00	6.0	5.5	18.8	—	—	—	—
			CRHEATER335A00	11.5	10.6	36.0	—	—	—	—
			CRHEATER336A00	14.0	12.9	43.9	—	—	—	—
			CRHEATER337A00	21.5	19.7	67.4	037	037	037	037
		HIGH	CRHEATER333A00	6.0	5.5	18.8	—	—	—	—
			CRHEATER335A00	11.5	10.6	36.0	—	—	—	—
			CRHEATER336A00	14.0	12.9	43.9	—	—	—	—
			CRHEATER337A00	21.5	19.7	67.4	037	037	037	037
	575-3-60	STD	CRHEATER339A00	10.0	9.2	31.3	—	—	—	—
			CRHEATER340A00	15.0	13.8	47.0	—	—	—	—
		MED	CRHEATER339A00	10.0	9.2	31.3	—	—	—	—
			CRHEATER340A00	15.0	13.8	47.0	—	—	—	—
		HIGH	CRHEATER339A00	10.0	9.2	31.3	—	—	—	—
			CRHEATER340A00	15.0	13.8	47.0	—	—	—	—

50FC**05 ELECTRIC HEAT DATA — WITH NON-FUSED DISCONNECT

50FC UNIT SIZE	NOM. V-Ph-Hz	IFM TYPE	ELECTRIC HEATER PART NUMBER	NOM (kW)	APPLICATION (kW)	APPLICATION OUTPUT (MBH)	SINGLE POINT OR JUNCTION PART NUMBER CRSINGLEXXXA00			
							NO C.O. OR UNPOWERED C.O.		w/PWRD C.O.	
							NO P.E.	w/P.E. (pwrd fr/unit)	NO P.E	w/P.E. (pwrd fr/unit)
**05	208/230-1-60	STD	CRHEATER323A00	4.4	3.3/4.0	11.3/13.8	037	037	—	—
			CRHEATER325A00	8.7	6.5/8.0	22.3/27.3	037	037	—	—
			CRHEATER327A00	13.0	9.8/11.9	33.3/40.7	040	040	—	—
			CRHEATER329A00	17.4	13.1/16.0	44.6/54.5	040	040	—	—
			CRHEATER330A00	19.2	14.4/17.6	49.2/60.2	040	040	—	—
			CRHEATER331A00	21.0	15.8/19.3	53.8/65.8	040	040	—	—
		MED	CRHEATER323A00	4.4	3.3/4.0	11.3/13.8	037	037	—	—
			CRHEATER325A00	8.7	6.5/8.0	22.3/27.3	037	037	—	—
			CRHEATER327A00	13.0	9.8/11.9	33.3/40.7	040	040	—	—
			CRHEATER329A00	17.4	13.1/16.0	44.6/54.5	040	040	—	—
			CRHEATER330A00	19.2	14.4/17.6	49.2/60.2	040	040	—	—
			CRHEATER331A00	21.0	15.8/19.3	53.8/65.8	040	040	—	—
		HIGH	CRHEATER323A00	4.4	3.3/4.0	11.3/13.8	037	037	—	—
			CRHEATER325A00	8.7	6.5/8.0	22.3/27.3	037	037	—	—
			CRHEATER327A00	13.0	9.8/11.9	33.3/40.7	040	040	—	—
			CRHEATER329A00	17.4	13.1/16.0	44.6/54.5	040	040	—	—
			CRHEATER330A00	19.2	14.4/17.6	49.2/60.2	040	040	—	—
			CRHEATER331A00	21.0	15.8/19.3	53.8/65.8	040	040	—	—
	208/230-3-60	STD	CRHEATER323A00	4.4	3.3/4.0	11.3/13.8	037	037	037	037
			CRHEATER324A00	6.5	4.9/6.0	16.7/20.4	037	037	037	037
			CRHEATER325A00	8.7	6.5/8.0	22.3/27.3	037	037	037	037
			CRHEATER328A00	16.0	12.0/14.7	41.0/50.1	037	037	038	038
			CRHEATER330A00	19.2	14.4/17.6	49.2/60.2	038	038	038	038
			CRHEATER331A00	21.0	15.8/19.3	53.8/65.8	038	038	038	038
		MED	CRHEATER323A00	4.4	3.3/4.0	11.3/13.8	037	037	037	037
			CRHEATER324A00	6.5	4.9/6.0	16.7/20.4	037	037	037	037
			CRHEATER325A00	8.7	6.5/8.0	22.3/27.3	037	037	037	037
			CRHEATER328A00	16.0	12.0/14.7	41.0/50.1	037	037	038	038
			CRHEATER330A00	19.2	14.4/17.6	49.2/60.2	038	038	038	038
			CRHEATER331A00	21.0	15.8/19.3	53.8/65.8	038	038	038	038
		HIGH	CRHEATER323A00	4.4	3.3/4.0	11.3/13.8	037	037	037	037
			CRHEATER324A00	6.5	4.9/6.0	16.7/20.4	037	037	037	037
			CRHEATER325A00	8.7	6.5/8.0	22.3/27.3	037	037	037	037
			CRHEATER328A00	16.0	12.0/14.7	41.0/50.1	037	037	038	038
			CRHEATER330A00	19.2	14.4/17.6	49.2/60.2	038	038	038	038
			CRHEATER331A00	21.0	15.8/19.3	53.8/65.8	038	038	038	038
	460-3-60	STD	CRHEATER333A00	6.0	5.5	18.8	—	—	—	—
			CRHEATER335A00	11.5	10.6	36.0	—	—	—	—
			CRHEATER336A00	14.0	12.9	43.9	—	—	—	—
			CRHEATER337A00	21.5	19.7	67.4	037	037	037	037
		MED	CRHEATER333A00	6.0	5.5	18.8	—	—	—	—
			CRHEATER335A00	11.5	10.6	36.0	—	—	—	—
			CRHEATER336A00	14.0	12.9	43.9	—	—	—	—
			CRHEATER337A00	21.5	19.7	67.4	037	037	037	037
		HIGH	CRHEATER333A00	6.0	5.5	18.8	—	—	—	—
			CRHEATER335A00	11.5	10.6	36.0	—	—	—	—
			CRHEATER336A00	14.0	12.9	43.9	—	—	—	—
			CRHEATER337A00	21.5	19.7	67.4	037	037	037	037
	575-3-60	STD	CRHEATER339A00	10.0	9.2	31.3	—	—	—	—
			CRHEATER340A00	15.0	13.8	47.0	—	—	—	—
		MED	CRHEATER339A00	10.0	9.2	31.3	—	—	—	—
			CRHEATER340A00	15.0	13.8	47.0	—	—	—	—
		HIGH	CRHEATER339A00	10.0	9.2	31.3	—	—	—	—
			CRHEATER340A00	15.0	13.8	47.0	—	—	—	—

50FC**06 ELECTRIC HEAT DATA — WITHOUT NON-FUSED DISCONNECT

50FC UNIT SIZE	NOM. V-Ph-Hz	IFM TYPE	ELECTRIC HEATER PART NUMBER	NOM (kW)	APPLICATION (kW)	APPLICATION OUTPUT (MBH)	SINGLE POINT OR JUNCTION PART NUMBER CRSINGLEXXXA00			
							NO C.O. OR UNPOWERED C.O.		w/PWRD C.O.	
							NO P.E.	w/P.E. (pwrd fr/unit)	NO P.E	w/P.E. (pwrd fr/unit)
**06	208/230-1-60	STD	CRHEATER324A00	6.5	4.9/6.0	16.7/20.4	—	—	—	—
			CRHEATER325A00	8.7	6.5/8.0	22.3/27.3	037	037	—	—
			CRHEATER327A00	13.0	9.8/11.9	33.3/40.7	040	040	—	—
			CRHEATER329A00	17.4	13.1/16.0	44.6/54.5	040	040	—	—
			CRHEATER331A00	21.0	15.8/19.3	53.8/65.8	040	040	—	—
		MED	CRHEATER324A00	6.5	4.9/6.0	16.7/20.4	—	—	—	—
			CRHEATER325A00	8.7	6.5/8.0	22.3/27.3	037	037	—	—
			CRHEATER327A00	13.0	9.8/11.9	33.3/40.7	040	040	—	—
			CRHEATER329A00	17.4	13.1/16.0	44.6/54.5	040	040	—	—
			CRHEATER331A00	21.0	15.8/19.3	53.8/65.8	040	040	—	—
		HIGH	CRHEATER324A00	6.5	4.9/6.0	16.7/20.4	—	—	—	—
			CRHEATER325A00	8.7	6.5/8.0	22.3/27.3	037	037	—	—
			CRHEATER327A00	13.0	9.8/11.9	33.3/40.7	040	040	—	—
			CRHEATER329A00	17.4	13.1/16.0	44.6/54.5	040	040	—	—
			CRHEATER331A00	21.0	15.8/19.3	53.8/65.8	040	040	—	—
	208/230-3-60	STD	CRHEATER324A00	6.5	4.9/6.0	16.7/20.4	—	—	—	—
			CRHEATER326A00	10.5	7.9/9.6	26.9/32.9	—	—	—	—
			CRHEATER328A00	16.0	12.0/14.7	41.0/50.1	037	037	038	038
			CRHEATER331A00	21.0	15.8/19.3	53.8/65.8	038	038	038	038
			CRHEATER332A00	24.5	18.4/22.5	62.8/76.8	038	038	038	038
		MED	CRHEATER324A00	6.5	4.9/6.0	16.7/20.4	—	—	—	—
			CRHEATER326A00	10.5	7.9/9.6	26.9/32.9	—	—	—	037
			CRHEATER328A00	16.0	12.0/14.7	41.0/50.1	037	038	038	038
			CRHEATER331A00	21.0	15.8/19.3	53.8/65.8	038	038	038	038
			CRHEATER332A00	24.5	18.4/22.5	62.8/76.8	038	038	038	038
		HIGH	CRHEATER324A00	6.5	4.9/6.0	16.7/20.4	—	—	—	—
			CRHEATER326A00	10.5	7.9/9.6	26.9/32.9	—	—	—	—
			CRHEATER328A00	16.0	12.0/14.7	41.0/50.1	037	037	038	038
			CRHEATER331A00	21.0	15.8/19.3	53.8/65.8	038	038	038	038
			CRHEATER332A00	24.5	18.4/22.5	62.8/76.8	038	038	038	038
	460-3-60	STD	CRHEATER333A00	6.0	5.5	18.8	—	—	—	—
			CRHEATER335A00	11.5	10.6	36.0	—	—	—	—
			CRHEATER336A00	14.0	12.9	43.9	—	—	—	—
			CRHEATER337A00	21.5	19.7	67.4	037	037	037	037
			CRHEATER338A00	24.0	22.0	75.2	037	037	037	037
		MED	CRHEATER333A00	6.0	5.5	18.8	—	—	—	—
			CRHEATER335A00	11.5	10.6	36.0	—	—	—	—
			CRHEATER336A00	14.0	12.9	43.9	—	—	—	—
			CRHEATER337A00	21.5	19.7	67.4	037	037	037	037
			CRHEATER338A00	24.0	22.0	75.2	037	037	037	037
		HIGH	CRHEATER333A00	6.0	5.5	18.8	—	—	—	—
			CRHEATER335A00	11.5	10.6	36.0	—	—	—	—
			CRHEATER336A00	14.0	12.9	43.9	—	—	—	—
			CRHEATER337A00	21.5	19.7	67.4	037	037	037	037
			CRHEATER338A00	24.0	22.0	75.2	037	037	037	037
	575-3-60	STD	CRHEATER340A00	15.0	13.8	47.0	—	—	—	—
			CRHEATER341A00	21.0	19.3	65.8	037	037	037	037
		MED	CRHEATER340A00	15.0	13.8	47.0	—	—	—	—
			CRHEATER341A00	21.0	19.3	65.8	037	037	037	037
		HIGH	CRHEATER340A00	15.0	13.8	47.0	—	—	—	—
			CRHEATER341A00	21.0	19.3	65.8	037	037	037	037

50FC**06 ELECTRIC HEAT DATA — WITH NON-FUSED DISCONNECT

50FC UNIT SIZE	NOM. V-Ph-Hz	IFM TYPE	ELECTRIC HEATER PART NUMBER	NOM (kW)	APPLICATION (kW)	APPLICATION OUTPUT (MBH)	SINGLE POINT OR JUNCTION PART NUMBER CRSINGLEXXXA00			
							NO C.O. OR UNPOWERED C.O.		w/PWRD C.O.	
							NO P.E.	w/P.E. (pwrd fr/unit)	NO P.E	w/P.E. (pwrd fr/unit)
**06	208/230-1-60	STD	CRHEATER324A00	6.5	4.9/6.0	16.7/20.4	037	037	—	—
			CRHEATER325A00	8.7	6.5/8.0	22.3/27.3	037	037	—	—
			CRHEATER327A00	13.0	9.8/11.9	33.3/40.7	040	040	—	—
			CRHEATER329A00	17.4	13.1/16.0	44.6/54.5	040	040	—	—
			CRHEATER331A00	21.0	15.8/19.3	53.8/65.8	040	040	—	—
		MED	CRHEATER324A00	6.5	4.9/6.0	16.7/20.4	037	037	—	—
			CRHEATER325A00	8.7	6.5/8.0	22.3/27.3	037	037	—	—
			CRHEATER327A00	13.0	9.8/11.9	33.3/40.7	040	040	—	—
			CRHEATER329A00	17.4	13.1/16.0	44.6/54.5	040	040	—	—
			CRHEATER331A00	21.0	15.8/19.3	53.8/65.8	040	040	—	—
	208/230-3-60	STD	CRHEATER324A00	6.5	4.9/6.0	16.7/20.4	037	037	037	037
			CRHEATER326A00	10.5	7.9/9.6	26.9/32.9	037	037	037	037
			CRHEATER328A00	16.0	12.0/14.7	41.0/50.1	037	037	038	038
			CRHEATER331A00	21.0	15.8/19.3	53.8/65.8	038	038	038	038
			CRHEATER332A00	24.5	18.4/22.5	62.8/76.8	038	038	038	038
		MED	CRHEATER324A00	6.5	4.9/6.0	16.7/20.4	037	037	037	037
			CRHEATER326A00	10.5	7.9/9.6	26.9/32.9	037	037	037	037
			CRHEATER328A00	16.0	12.0/14.7	41.0/50.1	037	038	038	038
			CRHEATER331A00	21.0	15.8/19.3	53.8/65.8	038	038	038	038
			CRHEATER332A00	24.5	18.4/22.5	62.8/76.8	038	038	038	038
		HIGH	CRHEATER324A00	6.5	4.9/6.0	16.7/20.4	037	037	037	037
			CRHEATER326A00	10.5	7.9/9.6	26.9/32.9	037	037	037	037
			CRHEATER328A00	16.0	12.0/14.7	41.0/50.1	037	037	038	038
			CRHEATER331A00	21.0	15.8/19.3	53.8/65.8	038	038	038	038
			CRHEATER332A00	24.5	18.4/22.5	62.8/76.8	038	038	038	038
	460-3-60	STD	CRHEATER333A00	6.0	5.5	18.8	—	—	—	—
			CRHEATER335A00	11.5	10.6	36.0	—	—	—	—
			CRHEATER336A00	14.0	12.9	43.9	—	—	—	—
			CRHEATER337A00	21.5	19.7	67.4	037	037	037	037
			CRHEATER338A00	24.0	22.0	75.2	037	037	037	037
		MED	CRHEATER333A00	6.0	5.5	18.8	—	—	—	—
			CRHEATER335A00	11.5	10.6	36.0	—	—	—	—
			CRHEATER336A00	14.0	12.9	43.9	—	—	—	—
			CRHEATER337A00	21.5	19.7	67.4	037	037	037	037
			CRHEATER338A00	24.0	22.0	75.2	037	037	037	037
		HIGH	CRHEATER333A00	6.0	5.5	18.8	—	—	—	—
			CRHEATER335A00	11.5	10.6	36.0	—	—	—	—
			CRHEATER336A00	14.0	12.9	43.9	—	—	—	—
			CRHEATER337A00	21.5	19.7	67.4	037	037	037	037
			CRHEATER338A00	24.0	22.0	75.2	037	037	037	037
	575-3-60	STD	CRHEATER340A00	15.0	13.8	47.0	—	—	—	—
			CRHEATER341A00	21.0	19.3	65.8	037	037	037	037
		MED	CRHEATER340A00	15.0	13.8	47.0	—	—	—	—
			CRHEATER341A00	21.0	19.3	65.8	037	037	037	037
		HIGH	CRHEATER340A00	15.0	13.8	47.0	—	—	—	—
			CRHEATER341A00	21.0	19.3	65.8	037	037	037	037

50FC**07 ELECTRIC HEAT DATA — WITHOUT NON-FUSED DISCONNECT

50FC UNIT SIZE	NOM. V-Ph-Hz	IFM TYPE	ELECTRIC HEATER PART NUMBER	NOM (kW)	APPLICATION (kW)	APPLICATION OUTPUT (MBH)	SINGLE POINT OR JUNCTION PART NUMBER CRSINGLEXXXA00			
							NO C.O. OR UNPOWERED C.O.		w/PWRD C.O.	
							NO P.E.	w/P.E. (pwrd fr/unit)	NO P.E	w/P.E. (pwrd fr/unit)
**07	208/230-3-60	STD	CRHEATER324A00	6.5	4.9/6.0	16.7/20.4	—	—	—	—
			CRHEATER326A00	10.5	7.9/9.6	26.9/32.9	—	—	—	—
			CRHEATER328A00	16.0	12.0/14.7	41.0/50.1	037	038	038	038
			CRHEATER331A00	21.0	15.8/19.3	53.8/65.8	038	038	038	038
			CRHEATER332A00	24.5	18.4/22.5	62.8/76.8	038	038	038	038
		MED	CRHEATER324A00	6.5	4.9/6.0	16.7/20.4	—	—	—	—
			CRHEATER326A00	10.5	7.9/9.6	26.9/32.9	—	—	—	—
			CRHEATER328A00	16.0	12.0/14.7	41.0/50.1	037	037	037	038
			CRHEATER331A00	21.0	15.8/19.3	53.8/65.8	038	038	038	038
			CRHEATER332A00	24.5	18.4/22.5	62.8/76.8	038	038	038	038
		HIGH	CRHEATER324A00	6.5	4.9/6.0	16.7/20.4	—	—	—	—
			CRHEATER326A00	10.5	7.9/9.6	26.9/32.9	—	—	—	—
			CRHEATER328A00	16.0	12.0/14.7	41.0/50.1	037	037	038	038
			CRHEATER331A00	21.0	15.8/19.3	53.8/65.8	038	038	038	038
			CRHEATER332A00	24.5	18.4/22.5	62.8/76.8	038	038	038	038
	460-3-60	STD	CRHEATER333A00	6.0	5.5	18.8	—	—	—	—
			CRHEATER335A00	11.5	10.6	36.0	—	—	—	—
			CRHEATER336A00	14.0	12.9	43.9	—	—	—	—
			CRHEATER337A00	21.5	19.7	67.4	037	037	037	037
			CRHEATER338A00	24.0	22.0	75.2	037	037	037	037
		MED	CRHEATER333A00	6.0	5.5	18.8	—	—	—	—
			CRHEATER335A00	11.5	10.6	36.0	—	—	—	—
			CRHEATER336A00	14.0	12.9	43.9	—	—	—	—
			CRHEATER337A00	21.5	19.7	67.4	037	037	037	037
			CRHEATER338A00	24.0	22.0	75.2	037	037	037	037
		HIGH	CRHEATER333A00	6.0	5.5	18.8	—	—	—	—
			CRHEATER335A00	11.5	10.6	36.0	—	—	—	—
			CRHEATER336A00	14.0	12.9	43.9	—	—	—	—
			CRHEATER337A00	21.5	19.7	67.4	037	037	037	037
			CRHEATER338A00	24.0	22.0	75.2	037	037	037	037
	575-3-60	STD	CRHEATER340A00	15.0	13.8	47.0	—	—	—	—
			CRHEATER341A00	21.0	19.3	65.8	037	037	037	037
		MED	CRHEATER340A00	15.0	13.8	47.0	—	—	—	—
			CRHEATER341A00	21.0	19.3	65.8	037	037	037	037
		HIGH	CRHEATER340A00	15.0	13.8	47.0	—	—	—	—
			CRHEATER341A00	21.0	19.3	65.8	037	037	037	037

50FC**07 ELECTRIC HEAT DATA — WITH NON-FUSED DISCONNECT

50FC UNIT SIZE	NOM. V-Ph-Hz	IFM TYPE	ELECTRIC HEATER PART NUMBER	NOM (kW)	APPLICATION (kW)	APPLICATION OUTPUT (MBH)	SINGLE POINT OR JUNCTION PART NUMBER CRSINGLEXXXA00			
							NO C.O. OR UNPOWERED C.O.		w/PWRD C.O.	
							NO P.E.	w/P.E. (pwrd fr/unit)	NO P.E	w/P.E. (pwrd fr/unit)
**07	208/230-3-60	STD	CRHEATER324A00	6.5	4.9/6.0	16.7/20.4	037	037	037	037
			CRHEATER326A00	10.5	7.9/9.6	26.9/32.9	037	037	037	037
			CRHEATER328A00	16.0	12.0/14.7	41.0/50.1	037	038	038	038
			CRHEATER331A00	21.0	15.8/19.3	53.8/65.8	038	038	038	038
			CRHEATER332A00	24.5	18.4/22.5	62.8/76.8	038	038	038	038
		MED	CRHEATER324A00	6.5	4.9/6.0	16.7/20.4	037	037	037	037
			CRHEATER326A00	10.5	7.9/9.6	26.9/32.9	037	037	037	037
			CRHEATER328A00	16.0	12.0/14.7	41.0/50.1	037	037	037	038
			CRHEATER331A00	21.0	15.8/19.3	53.8/65.8	038	038	038	038
			CRHEATER332A00	24.5	18.4/22.5	62.8/76.8	038	038	038	038
		HIGH	CRHEATER324A00	6.5	4.9/6.0	16.7/20.4	037	037	037	037
			CRHEATER326A00	10.5	7.9/9.6	26.9/32.9	037	037	037	037
			CRHEATER328A00	16.0	12.0/14.7	41.0/50.1	037	037	038	038
			CRHEATER331A00	21.0	15.8/19.3	53.8/65.8	038	038	038	038
			CRHEATER332A00	24.5	18.4/22.5	62.8/76.8	038	038	038	038
	460-3-60	STD	CRHEATER333A00	6.0	5.5	18.8	—	—	—	—
			CRHEATER335A00	11.5	10.6	36.0	—	—	—	—
			CRHEATER336A00	14.0	12.9	43.9	—	—	—	—
			CRHEATER337A00	21.5	19.7	67.4	037	037	037	037
			CRHEATER338A00	24.0	22.0	75.2	037	037	037	037
		MED	CRHEATER333A00	6.0	5.5	18.8	—	—	—	—
			CRHEATER335A00	11.5	10.6	36.0	—	—	—	—
			CRHEATER336A00	14.0	12.9	43.9	—	—	—	—
			CRHEATER337A00	21.5	19.7	67.4	037	037	037	037
			CRHEATER338A00	24.0	22.0	75.2	037	037	037	037
		HIGH	CRHEATER333A00	6.0	5.5	18.8	—	—	—	—
			CRHEATER335A00	11.5	10.6	36.0	—	—	—	—
			CRHEATER336A00	14.0	12.9	43.9	—	—	—	—
			CRHEATER337A00	21.5	19.7	67.4	037	037	037	037
			CRHEATER338A00	24.0	22.0	75.2	037	037	037	037
	575-3-60	STD	CRHEATER340A00	15.0	13.8	47.0	—	—	—	—
			CRHEATER341A00	21.0	19.3	65.8	037	037	037	037
		MED	CRHEATER340A00	15.0	13.8	47.0	—	—	—	—
			CRHEATER341A00	21.0	19.3	65.8	037	037	037	037
		HIGH	CRHEATER340A00	15.0	13.8	47.0	—	—	—	—
			CRHEATER341A00	21.0	19.3	65.8	037	037	037	037

TYPICAL CONTROL WIRING DIAGRAM — 48FC 04-06 208-230/3/60 UNIT WITH ELECTRO-MECHANICAL CONTROL AND W7212 ECONOMIZER

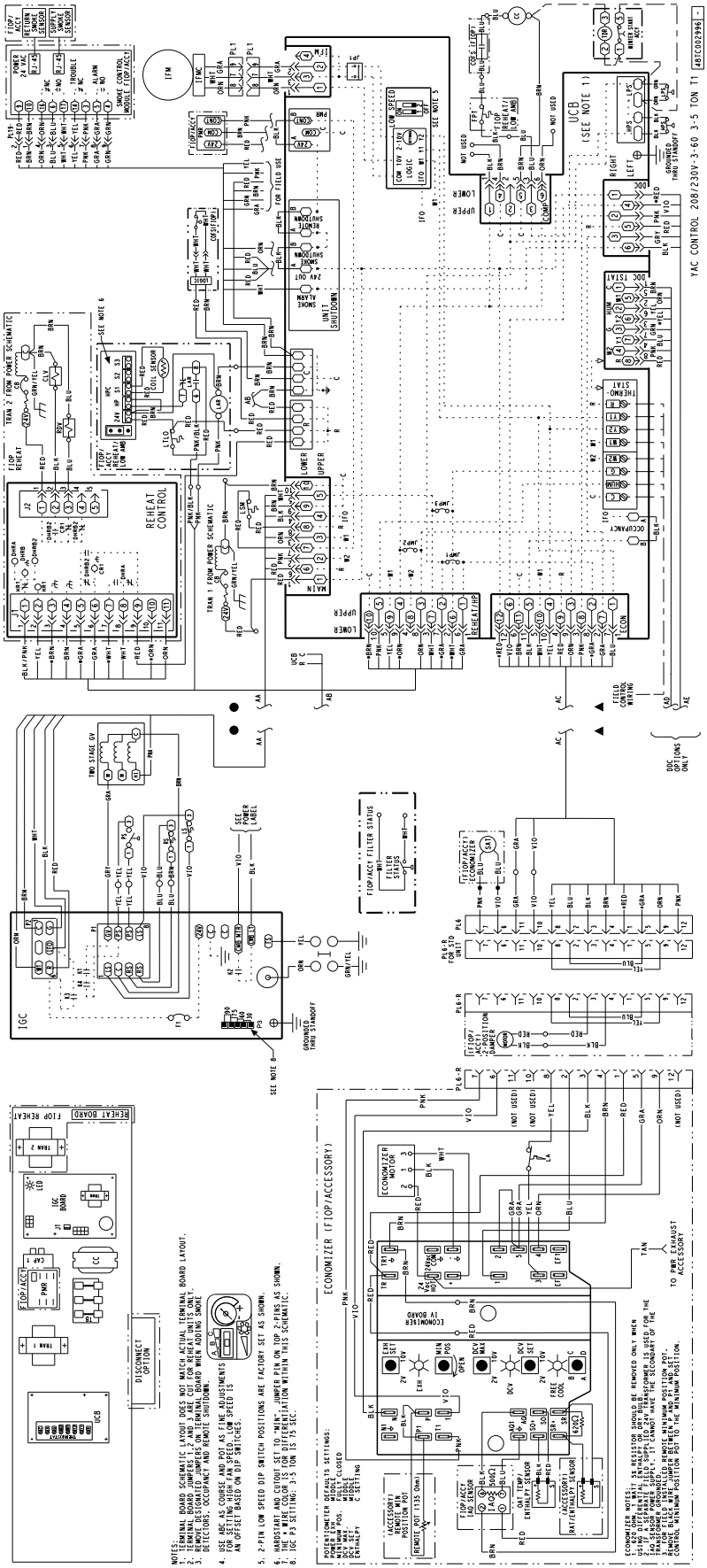

TYPICAL CONTROL WIRING DIAGRAM — 48FC 07 208-230/3/60 UNIT WITH ELECTRO-MECHANICAL CONTROL AND W7220 ECONOMIZER

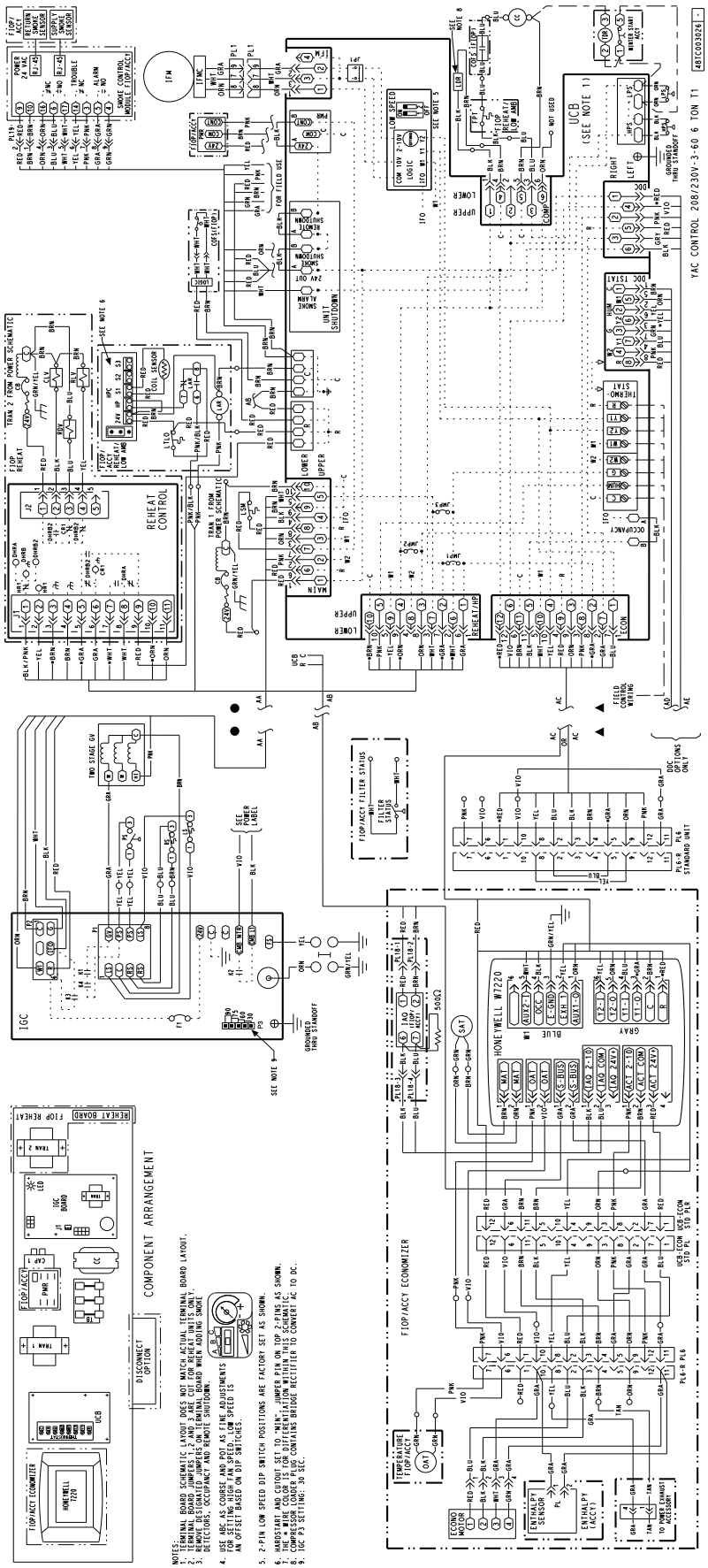

TYPICAL CONTROL WIRING DIAGRAM — 48FC 04-06 460-575/3/60 UNIT WITH ELECTRO-MECHANICAL CONTROL AND W7212 ECONOMIZER

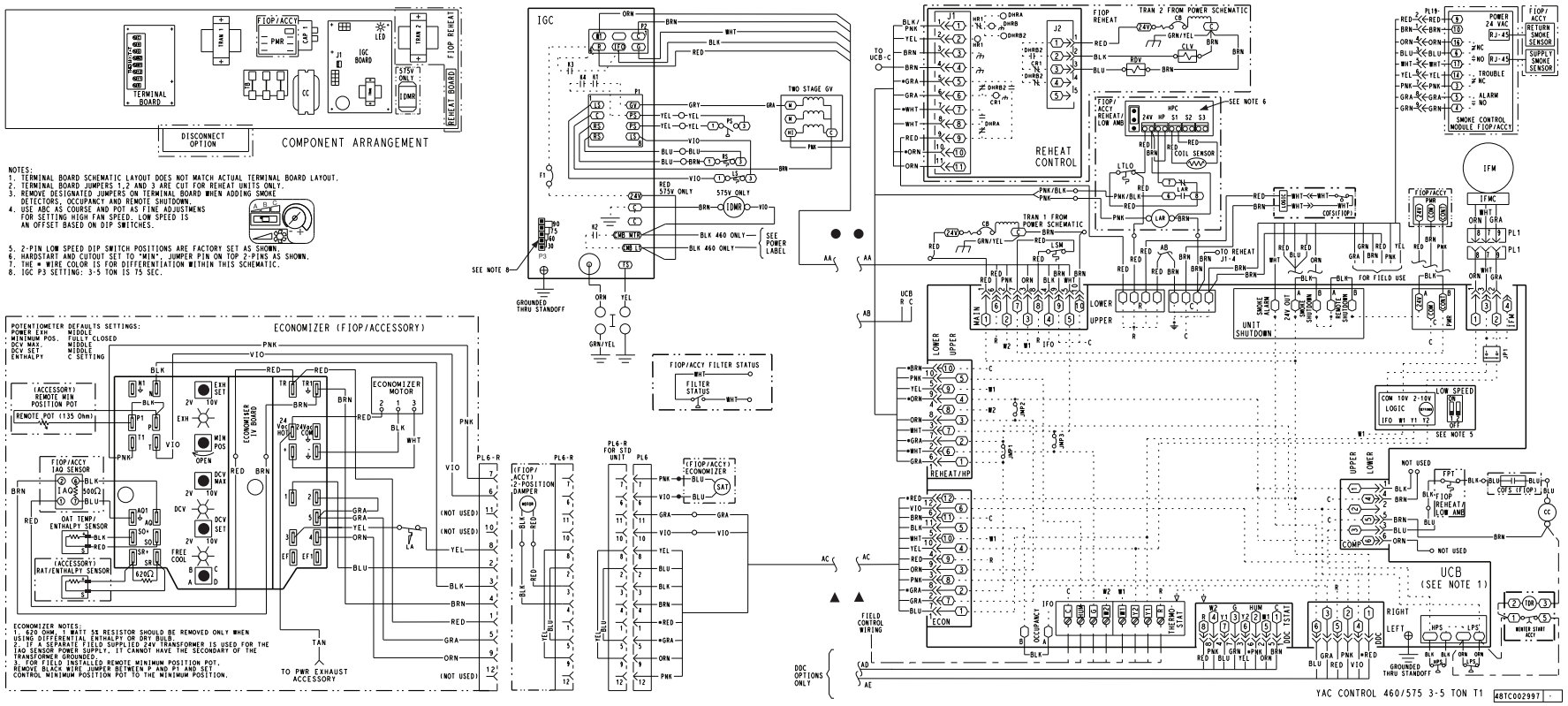

TYPICAL CONTROL WIRING DIAGRAM — 48FC 07 460-575/3/60 UNIT WITH ELECTRO-MECHANICAL CONTROL AND W7220 ECONOMIZER

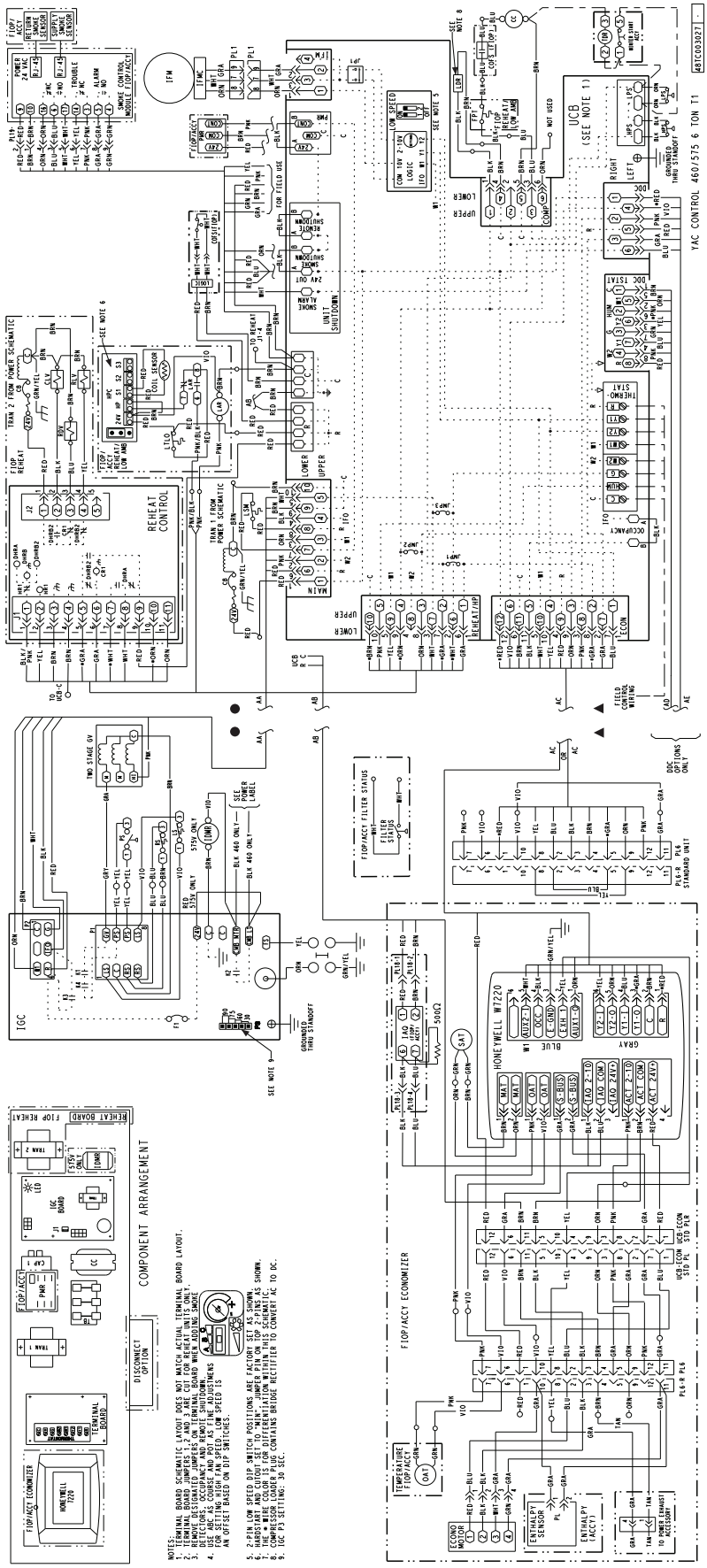

TYPICAL 48FC 04-07 POWER WIRING DIAGRAM, 208-230/3/60 UNIT SHOWN

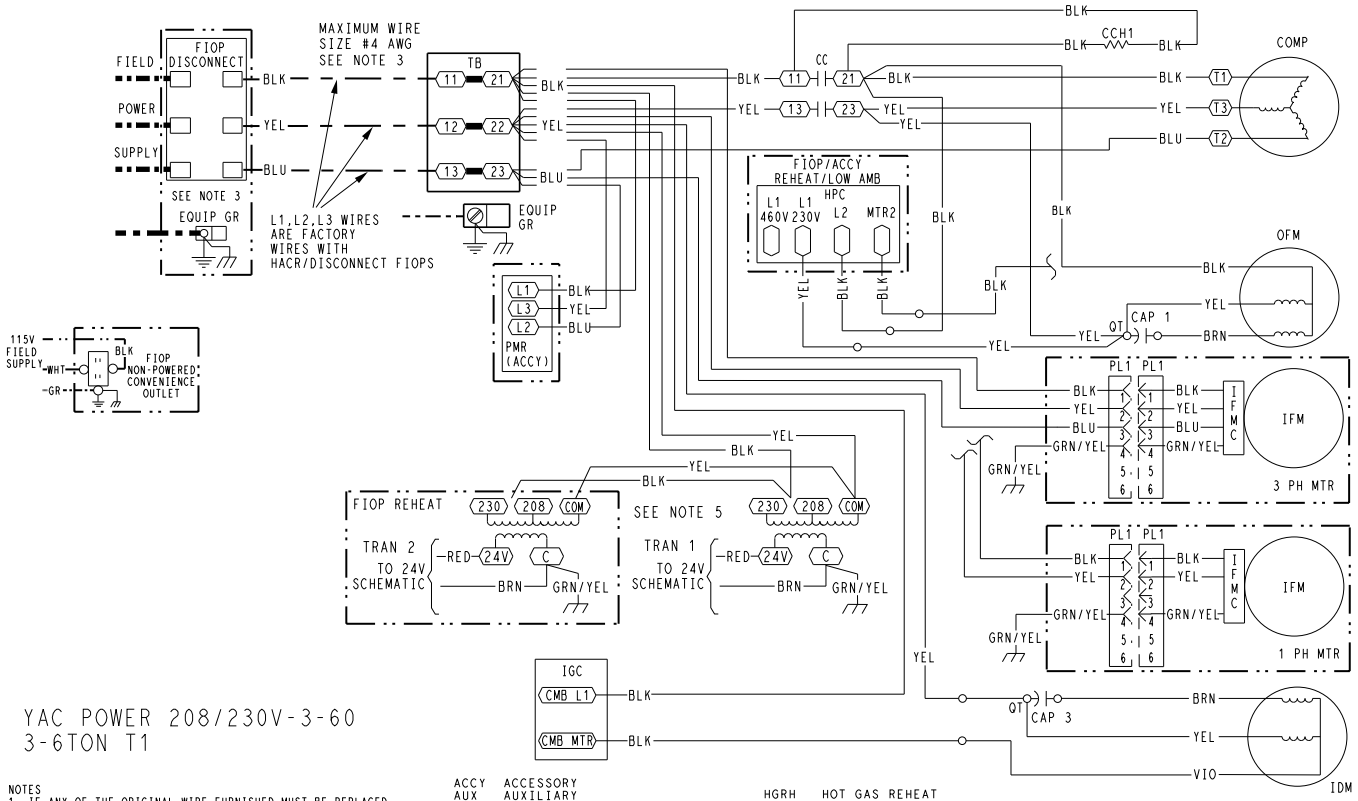

YAC POWER 208/230V-3-60
3-6TON T1

NOTES
1. IF ANY OF THE ORIGINAL WIRE FURNISHED MUST BE REPLACED. IT MUST BE REPLACED WITH TYPE 90° C WIRE OR ITS EQUIVALENT.
2. COMPRESSOR AND FAN MOTORS ARE THERMALLY PROTECTED.
3. USE COPPER CONDUCTOR ONLY.
4. DO NOT DISCONNECT POWER PLUG OR SIGNAL WIRE WHILE UNDER LOAD.
5. ON 208/230V UNITS, TRAN IS WIRED FOR 230V. IF UNIT IS TO BE RUN WITH 208V POWER SUPPLY, DISCONNECT BLK WIRE FROM 230V TAP AND CONNECT TO 208V TAP.

LEGEND

- MARKED WIRE
- TERMINAL (MARKED)
- TERMINAL (UNMARKED)
- TERMINAL BLOCK
- SPLICE
- SPLICE (MARKED)
- FACTORY WIRING
- FIELD CONTROL WIRING
- FIELD POWER WIRING
- CIRCUIT BOARD TRACE
- ACCESSORY OR OPTIONAL WIRING

ACCY	ACCESSORY
AUX	AUXILIARY
AWG	AMERICAN WIRE GAGE
BA	BUILDING AUTOMATION NETWORK
CC	CONTACTOR,COMPRESSOR
C	COMMON
CAP	CAPACITOR
CB	CIRCUIT BREAKER
CCH	CRANKCASE HEATER
CCHR	CRANKCASE HEATER RELAY
CCHTS	CRANKCASE HEATER TEMP SWITCH
CLO	COMPRESSOR LOCKOUT
CLV	COOLING LIQUID VALVE
CMB	CENTRIFUGAL MOTOR BLOWER
COFS	CONDENSATE OVERFLOW SWITCH
COM	SIGNAL COMMON
COMP	COMPRESSOR MOTOR
DDC	DIRECT DIGITAL CONTROL
DFB	DEFROST BOARD
DFT	DEFROST THERMOSTAT
EHR	ELECTRIC HEAT RELAY
ENTH	ENTHALPY
EQUIP	EQUIPMENT
ERV	ENERGY RECOVERY VENTILATOR
ESL	ENTHALPY SENSOR - LOW
FB	FUSE BLOCK
FIOP	FACTORY INSTALLED OPTION
FPT	FREEZE PROTECTION THERMOSTAT
FS	FLAME SWITCH
FST	FAN HOUSING TEMP SENSOR
FU	FUSE
G	THERMOSTAT FAN CALL
GR(GND)	GROUND
GV	GAS VALVE
HACR	HEATING, AIR-CONDITIONING, REFRIGERATION BREAKER
HGRH	HOT GAS REHEAT
HPC	HEAD PRESSURE CONTROL
HPS	HIGH PRESSURE SWITCH
HR	HEATER RELAY
HUM	HUMIDISTAT
IAQ	INDOOR AIR QUALITY SENSORS
IDM	INDUCED DRAFT MOTOR
IDMR	INDUCED DRAFT RELAY
IFM	INDOOR FAN MOTOR
IFMC	INDOOR FAN MOTOR CONTROL
IFO	INDOOR FAN ON SIGNAL
IGC	INTEGRATED GAS CONTROL
I	IGNITOR
IRH	INDOOR RELATIVE HUMIDITY
JMP	JUMPER
L1	LINE 1
LA	LOW AMBIENT LOCKOUT
LAR	LOW AMBIENT RELAY
LAS	LOW AMBIENT SWITCH
LDR	COMPRESSOR LOADER
LEN	LOCAL EQUIPMENT NETWORK
LOC	LOSS OF CHARGE
LOOP PWR	CURRENT LOOP POWER
LPS	LOW PRESSURE SWITCH
LS	LIMIT SWITCH
LSM	LIMIT SWITCH (MANUAL RESET)
LTLO	LOW TEMP LOCKOUT
MBB	MAIN BASE BOARD
MOV	METAL OXIDE VARISTOR
MTR	MOTOR
OAQ	OUTDOOR AIR QUALITY
OAT	OUTDOOR AIR TEMP. SEN
OFM	OUTDOOR FAN MOTOR
OFR	OUTDOOR FAN RELAY
OL	OVERLOAD
PER	POWER EXHAUST RELAY
PH	PHASE
PL	PLUG ASSEMBLY
POT	POTENTIOMETER
PMR	PHASE MONITOR RELAY
PS	PRESSURE SWITCH
PWM	PULSE WIDTH MODULATION
QT	QUADRUPLE TERMINAL
R	THERMOSTAT POWER
RAT	RETURN AIR TEMP. SEN
RDV	REHEAT DISCHARGE VALVE
RH	RELATIVE HUMIDITY
RLV	REHEAT LIQUID VALVE
RNET	LOCAL ACCESS NETWORK
RS	ROLLOUT SWITCH
RVS	REVERSING VALVE SOLENOID
SAT	SUPPLY AIR TEMP SENSOR
SDP	SYSTEM DISCHARGE PRESSURE
SPRH	SPACE RELATIVE HUMIDITY
SPT	SPACE TEMPERATURE SENSOR
SPTO	SPACE TEMPERATURE OFFSET
SSP	SYSTEM SUCTION PRESSURE
STD	STANDARD
SW	SWITCH
TB	TERMINAL BLOCK
TDR	TIME DELAY RELAY
TRAN	TRANSFORMER
UCB	UNIT CONTROL BOARD
W1	1st STAGE OF HEATING CALL
W2	2nd STAGE OF HEATING CALL
Y1	1st STAGE OF COOLING CALL
Y2	2nd STAGE OF COOLING CALL

48TC002991 -

TYPICAL 48FC 04-07 POWER WIRING DIAGRAM, 460-575/3/60 UNIT SHOWN

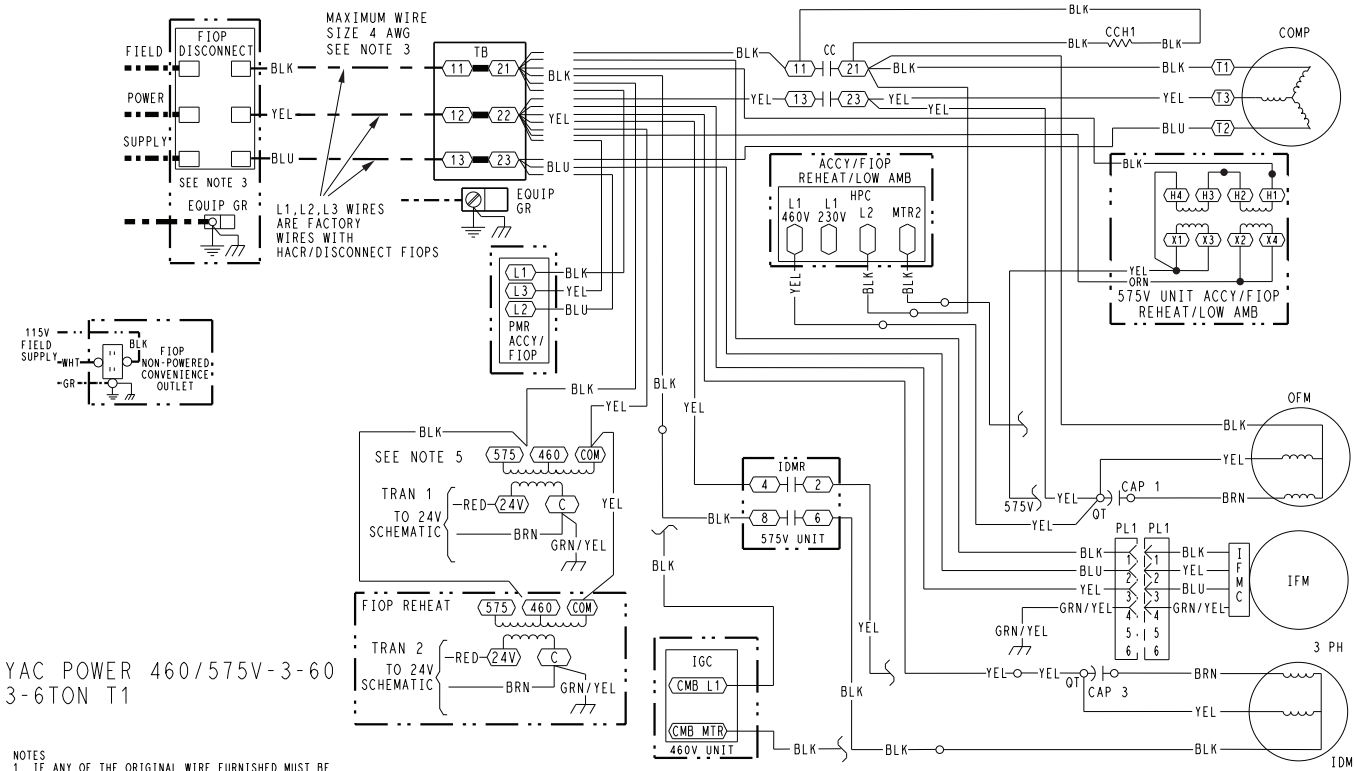

YAC POWER 460/575V-3-60
3-6TON T1

NOTES
1. IF ANY OF THE ORIGINAL WIRE FURNISHED MUST BE REPLACED, IT MUST BE REPLACED WITH TYPE 90° C WIRE OR ITS EQUIVALENT.
2. COMPRESSOR AND FAN MOTORS ARE THERMALLY PROTECTED.
3. USE COPPER CONDUCTOR ONLY.
4. DO NOT DISCONNECT POWER PLUG OR SIGNAL WIRE WHILE UNDER LOAD.
5. TRANSFORMER IS DEDICATED BASED ON UNIT VOLTAGE. TAPS ONLY SHOWN TO SIMPLIFY SCHEMATIC.

LEGEND

- MARKED WIRE
- TERMINAL (MARKED)
- TERMINAL (UNMARKED)
- TERMINAL BLOCK
- SPLICE
- SPLICE (MARKED)
- FACTORY WIRING
- FIELD CONTROL WIRING
- FIELD POWER WIRING
- CIRCUIT BOARD TRACE
- ACCESSORY OR OPTIONAL WIRING

ACCY	ACCESSORY
AUX	AUXILIARY
AWG	AMERICAN WIRE GAGE
BA	BUILDING AUTOMATION NETWORK
CC	CONTACTOR,COMPRESSOR
C	COMMON
CAP	CAPACITOR
CB	CIRCUIT BREAKER
CCH	CRANKCASE HEATER
CCHR	CRANKCASE HEATER RELAY
CCHTS	CRANKCASE HEATER TEMP SWITCH
CLO	COMPRESSOR LOCKOUT
CLV	COOLING LIQUID VALVE
CMB	CENTRIFUGAL MOTOR BLOWER
COFS	CONDENSATE OVERFLOW SWITCH
COM	SIGNAL COMMON
COMP	COMPRESSOR MOTOR
DDC	DIRECT DIGITAL CONTROL
DFB	DEFROST BOARD
DFT	DEFROST THERMOSTAT
EHR	ELECTRIC HEAT RELAY
ENTH	ENTHALPY
EQUIP	EQUIPMENT
ERV	ENERGY RECOVERY VENTILATOR
ESL	ENTHALPY SENSOR - LOW
FB	FUSE BLOCK
FIOP	FACTORY INSTALLED OPTION
FPT	FREEZE PROTECTION THERMOSTAT
FS	FLAME SWITCH
FST	FAN HOUSING TEMP SENSOR
FU	FUSE
G	THERMOSTAT FAN CALL
GR(GND)	GROUND
GV	GAS VALVE
HACR	HEATING, AIR-CONDITIONING, REFRIGERATION BREAKER
HGRH	HOT GAS REHEAT
HPC	HEAD PRESSURE CONTROL
HPS	HIGH PRESSURE SWITCH
HR	HEATER RELAY
HUM	HUMIDISTAT
IAQ	INDOOR AIR QUALITY SENSORS
IDM	INDUCED DRAFT MOTOR
IDMR	INDUCED DRAFT RELAY
IFM	INDOOR FAN MOTOR
IFMC	INDOOR FAN MOTOR CONTROL
IFO	INDOOR FAN ON SIGNAL
IGC	INTEGRATED GAS CONTROL
I	IGNITOR
IRH	INDOOR RELATIVE HUMIDITY
JMP	JUMPER
L1	LINE 1
LA	LOW AMBIENT LOCKOUT
LAR	LOW AMBIENT RELAY
LAS	LOW AMBIENT SWITCH
LDR	COMPRESSOR LOADER
LEN	LOCAL EQUIPMENT NETWORK
LOC	LOSS OF CHARGE
LOOP PWR	CURRENT LOOP POWER
LPS	LOW PRESSURE SWITCH
LS	LIMIT SWITCH
LSM	LIMIT SWITCH (MANUAL RESET)
LTLO	LOW TEMP LOCKOUT
MBB	MAIN BASE BOARD
MOV	METAL OXIDE VARISTOR
MTR	MOTOR
OAQ	OUTDOOR AIR QUALITY
OAT	OUTDOOR AIR TEMP. SEN
OFM	OUTDOOR FAN MOTOR
OFR	OUTDOOR FAN RELAY
OL	OVERLOAD
PER	POWER EXHAUST RELAY
PH	PHASE
PL	PLUG ASSEMBLY
POT	POTENTIOMETER
PMR	PHASE MONITOR RELAY
PS	PRESSURE SWITCH
PWM	PULSE WIDTH MODULATION
QT	QUADRUPLE TERMINAL
R	THERMOSTAT POWER
RAT	RETURN AIR TEMP. SEN
RDV	REHEAT DISCHARGE VALVE
RH	RELATIVE HUMIDITY
RLV	REHEAT LIQUID VALVE
RNET	LOCAL ACCESS NETWORK
RS	ROLLOUT SWITCH
RVS	REVERSING VALVE SOLENOID
SAT	SUPPLY AIR TEMP SENSOR
SDP	SYSTEM DISCHARGE PRESSURE
SPRH	SPACE RELATIVE HUMIDITY
SPT	SPACE TEMPERATURE SENSOR
SPTO	SPACE TEMPERATURE OFFSET
SSP	SYSTEM SUCTION PRESSURE
STD	STANDARD
SW	SWITCH
TB	TERMINAL BLOCK
TDR	TIME DELAY RELAY
TRAN	TRANSFORMER
UCB	UNIT CONTROL BOARD
W1	1st STAGE OF HEATING CALL
W2	2nd STAGE OF HEATING CALL
Y1	1st STAGE OF COOLING CALL
Y2	2nd STAGE OF COOLING CALL

48TC002992 | B

TYPICAL CONTROL WIRING DIAGRAM — 50FC 04-06 208-230/3/60 UNIT WITH ELECTRO-MECHANICAL CONTROL AND W7212 ECONOMIZER

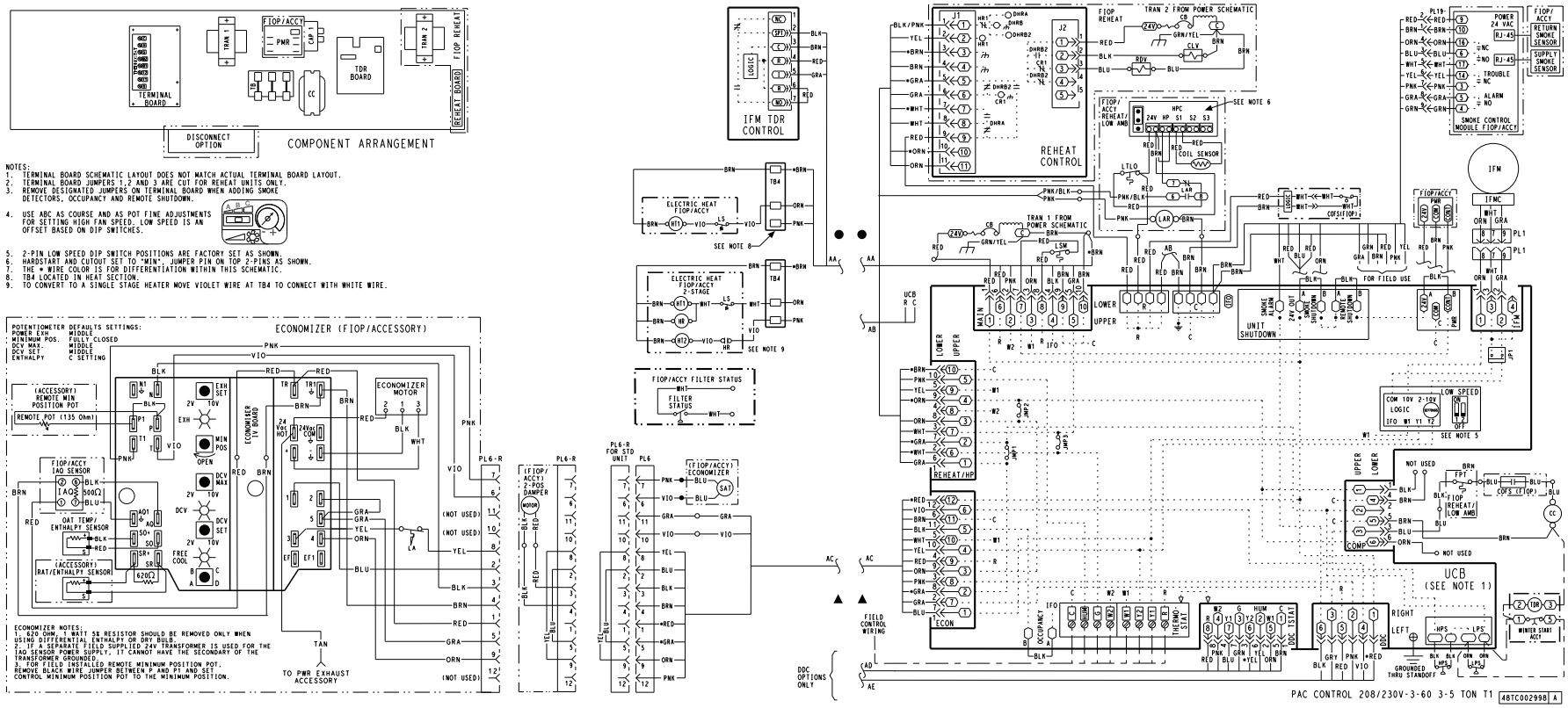

TYPICAL CONTROL WIRING DIAGRAM — 50FC 07 208-230/3/60 UNIT WITH ELECTRO-MECHANICAL CONTROL AND W7220 ECONOMIZER

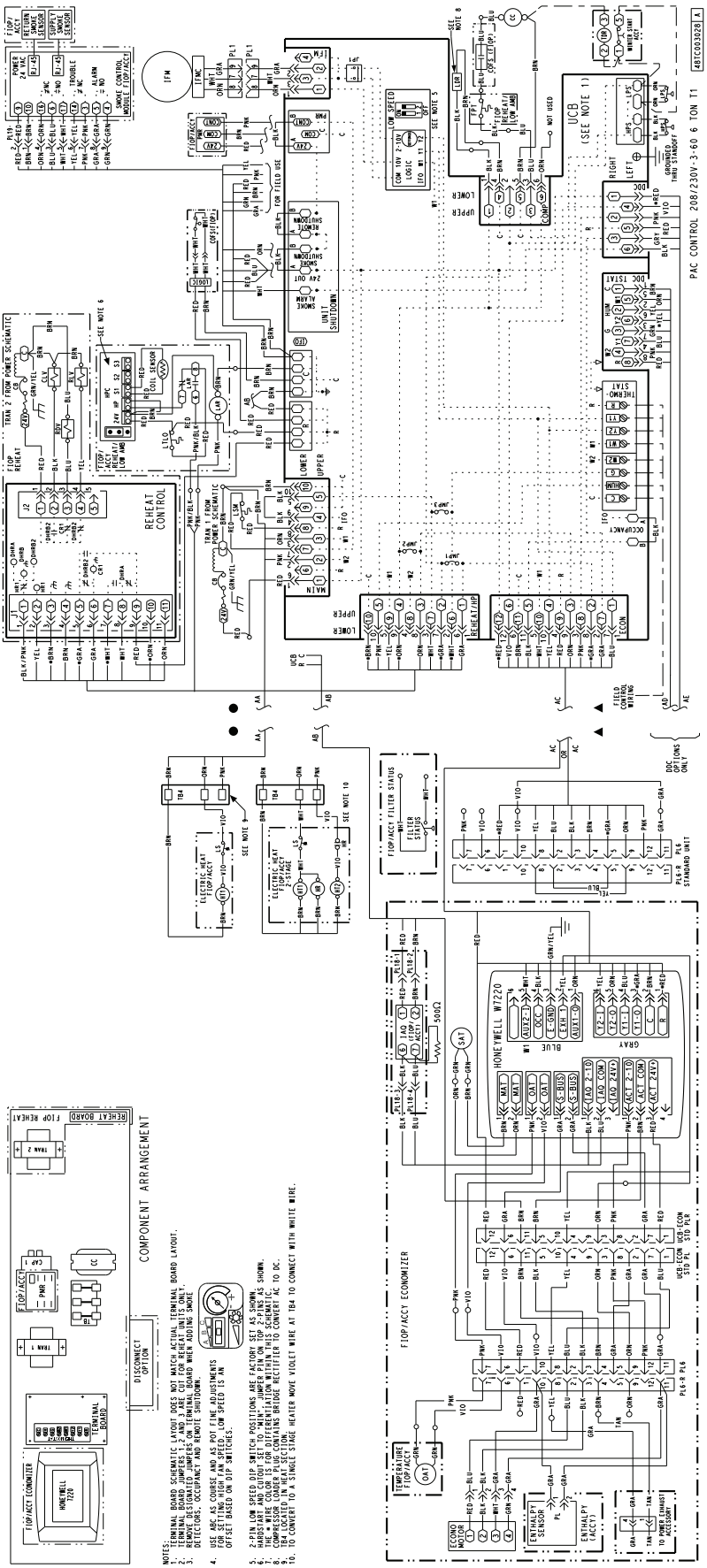

TYPICAL CONTROL WIRING DIAGRAM — 50FC 04-06 460-575/3/60 UNIT WITH ELECTRO-MECHANICAL CONTROL AND W7212 ECONOMIZER

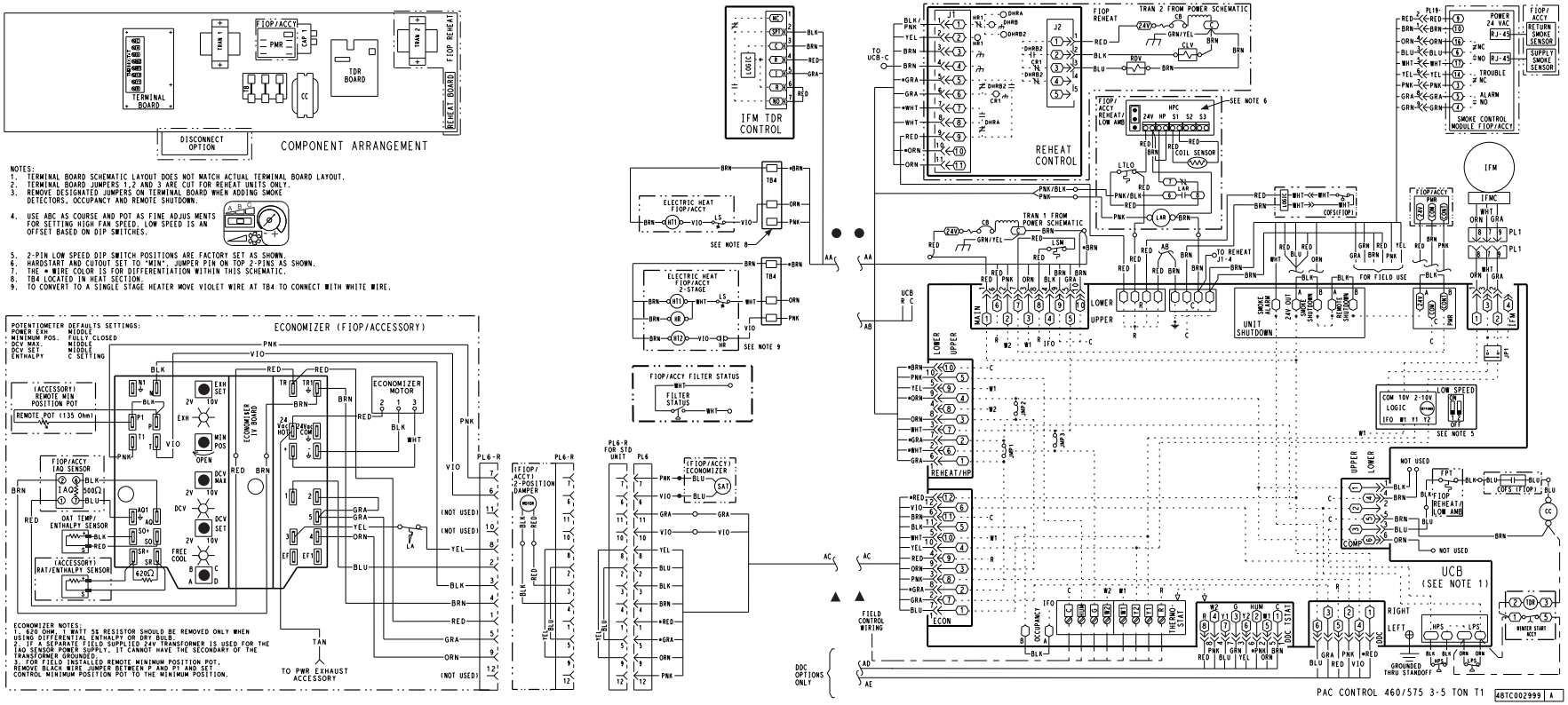

TYPICAL CONTROL WIRING DIAGRAM — 50FC 07 460-575/3/60 UNIT WITH ELECTRO-MECHANICAL CONTROL AND W7220 ECONOMIZER

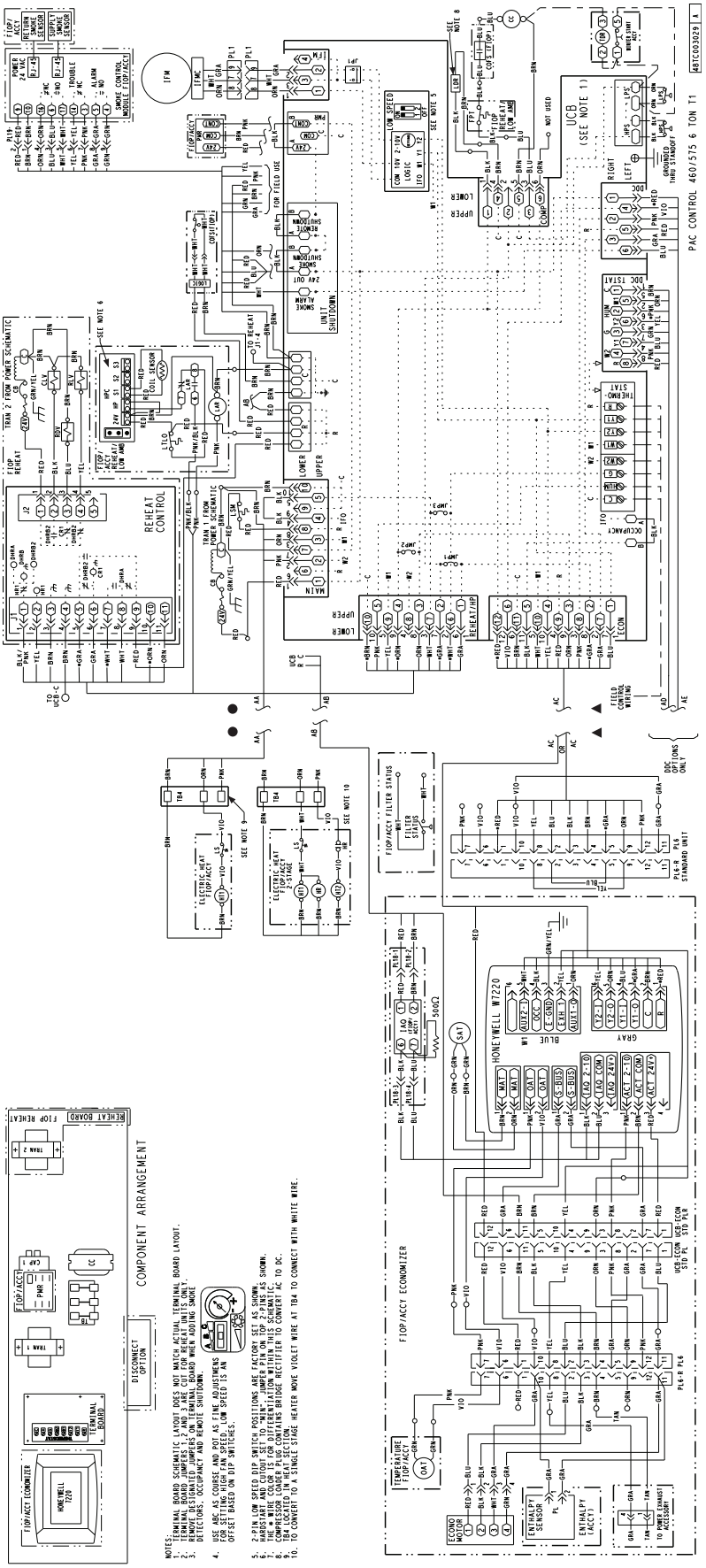

TYPICAL 50FC 04-07 POWER WIRING DIAGRAM, 208-230/3/60 UNIT SHOWN

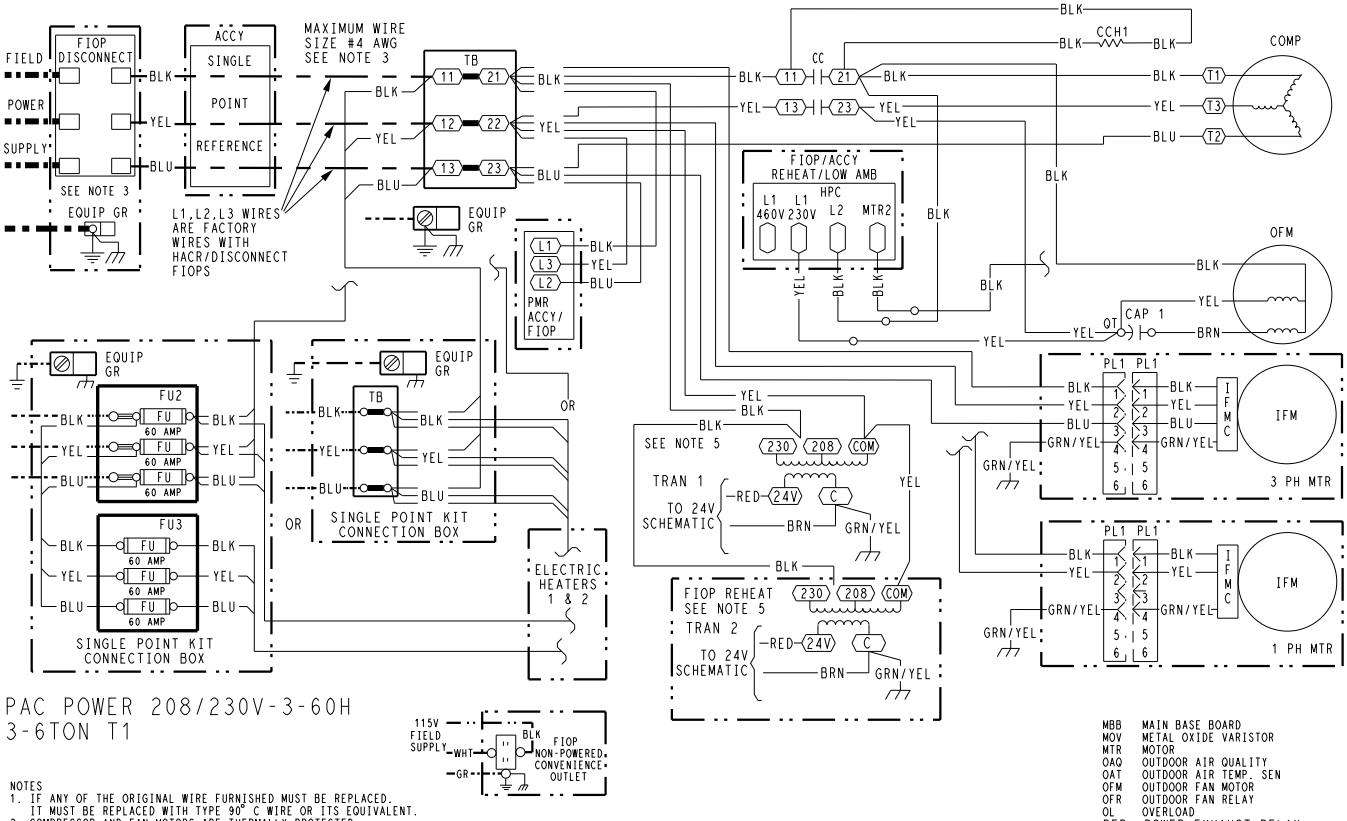

NOTES
1. IF ANY OF THE ORIGINAL WIRE FURNISHED MUST BE REPLACED. IT MUST BE REPLACED WITH TYPE 90° C WIRE OR ITS EQUIVALENT.
2. COMPRESSOR AND FAN MOTORS ARE THERMALLY PROTECTED.
3. USE COPPER CONDUCTOR ONLY.
4. DO NOT DISCONNECT POWER PLUG OR SIGNAL WIRE WHILE UNDER LOAD.
5. ON 208/230V UNITS, TRAN IS WIRED FOR 230V. IF UNIT IS TO BE RUN WITH 208V POWER SUPPLY, DISCONNECT BLK WIRE FROM 230V TAP AND CONNECT TO 208V TAP.

LEGEND

- MARKED WIRE
- TERMINAL (MARKED)
- TERMINAL (UNMARKED)
- TERMINAL BLOCK
- SPLICE
- SPLICE (MARKED)
- FACTORY WIRING
- FIELD CONTROL WIRING
- FIELD POWER WIRING
- CIRCUIT BOARD TRACE
- ACCESSORY OR OPTIONAL WIRING

ACCY	ACCESSORY
AWG	AMERICAN WIRE GAGE
BAS	BUILDING AUTOMATION NETWORK
CC	CONTACTOR,COMPRESSOR
C	COMMON
CAP	CAPACITOR
CB	CIRCUIT BREAKER
CCH	CRANKCASE HEATER
CCHR	CRANKCASE HEATER RELAY
CCHTS	CRANKCASE HEATER TEMP SWITCH
CLO	COMPRESSOR LOCKOUT
CLV	COOLING LIQUID VALVE
COFS	CONDENSATE OVERFLOW SWITCH
COM	SIGNAL COMMON
COMP	COMPRESSOR MOTOR
DDC	DIRECT DIGITAL CONTROL
DFB	DEFROST BOARD
DFT	DEFROST THERMOSTAT
EHR	ELECTRIC HEAT RELAY
ENTH	ENTHALPY
ERV	ENERGY RECOVERY VENTILATOR
ESL	ENTHALPY SENSOR - LOW
FB	FUSE BLOCK
FIOP	FACTORY INSTALLED OPTION
FPT	FREEZE PROTECTION THERMOSTAT
FST	FAN HOUSING TEMP SENSOR
FU	FUSE
G	THERMOSTAT FAN CALL
GR(GND)	GROUND
HACR	HEATING, AIR-CONDITIONING, REFRIGERATION BREAKER
HR	HEATER RELAY
HGRH	HOT GAS REHEAT
HPC	HEAD PRESSURE CONTROL
HPS	HIGH PRESSURE SWITCH
HUM	HUMIDISTAT
IAQ	INDOOR AIR QUALITY SENSORS
IFM	INDOOR FAN MOTOR
IFMC	INDOOR FAN MOTOR CONTROL
IFO	INDOOR FAN ON SIGNAL
IRH	INDOOR RELATIVE HUMIDITY
JMP	JUMPER
L1	LINE 1
LA	LOW AMBIENT LOCKOUT
LAR	LOW AMBIENT RELAY
LAS	LOW AMBIENT SWITCH
LDR	COMPRESSOR LOADER
LEN	LOCAL EQUIPMENT NETWORK
LOC	LOSS OF CHARGE
LOOP PWR	CURRENT LOOP POWER
LPS	LOW PRESSURE SWITCH
LS	LIMIT SWITCH
LSM	LIMIT SWITCH (MANUAL RESET)
LTLO	LOW TEMP LOCKOUT
MBB	MAIN BASE BOARD
MOV	METAL OXIDE VARISTOR
MTR	MOTOR
OAQ	OUTDOOR AIR QUALITY
OAT	OUTDOOR AIR TEMP. SEN
OFM	OUTDOOR FAN MOTOR
OFR	OUTDOOR FAN RELAY
OL	OVERLOAD
PER	POWER EXHAUST RELAY
PH	PHASE
PL	PLUG ASSEMBLY
POT	POTENTIOMETER
PMR	PHASE MONITOR RELAY
PS	PRESSURE SWITCH
PWM	PULSE WIDTH MODULATION
QT	QUADRUPLE TERMINAL
R	THERMOSTAT POWER
RAT	RETURN AIR TEMP. SEN
RDV	REHEAT DISCHARGE VALVE
RH	RELATIVE HUMIDITY
RLV	REHEAT LIQUID VALVE
RNET	LOCAL ACCESS NETWORK
RVS	REVERSING VALVE SOLENOID
SAT	SUPPLY AIR TEMP SENSOR
SDP	SYSTEM DISCHARGE PRESSURE
SPRH	SPACE RELATIVE HUMIDITY
SPT	SPACE TEMPERATURE SENSOR
SPTO	SPACE TEMPERATURE OFFSET
SSP	SYSTEM SUCTION PRESSURE
SW	SWITCH
TB	TERMINAL BLOCK
TDR	TIME DELAY RELAY
TRAN	TRANSFORMER
UCB	UNIT CONTROL BOARD
W1	1st STAGE OF HEATING CALL
W2	2nd STAGE OF HEATING CALL
Y1	1st STAGE OF COOLING CALL
Y2	2nd STAGE OF COOLING CALL

48TC002994 -

TYPICAL 50FC 04-07 POWER WIRING DIAGRAM, 460-575/3/60 UNIT SHOWN

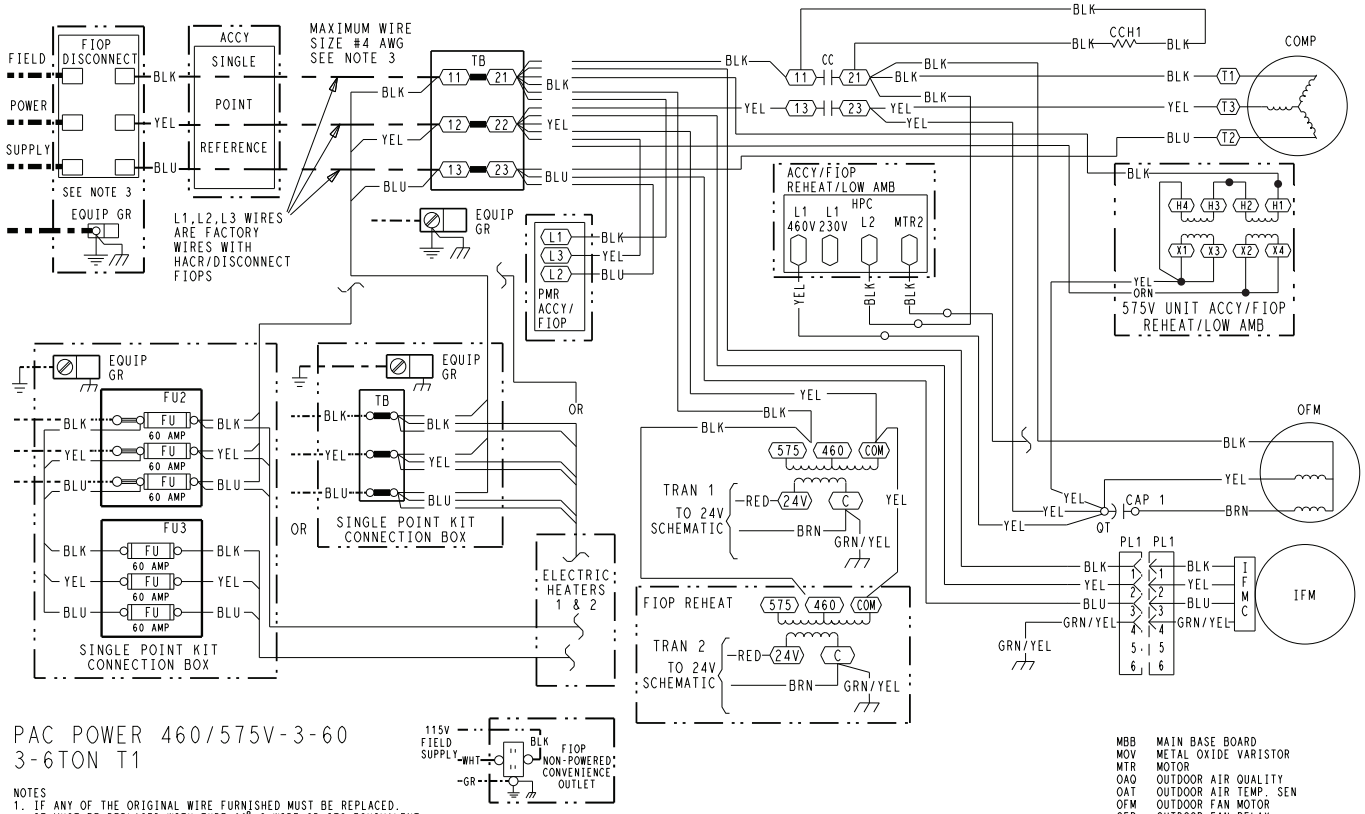

PAC POWER 460/575V-3-60
3-6TON T1

NOTES
1. IF ANY OF THE ORIGINAL WIRE FURNISHED MUST BE REPLACED. IT MUST BE REPLACED WITH TYPE 90° C WIRE OR ITS EQUIVALENT.
2. COMPRESSOR AND FAN MOTORS ARE THERMALLY PROTECTED.
3. USE COPPER CONDUCTOR ONLY.
4. DO NOT DISCONNECT POWER PLUG OR SIGNAL WIRE WHILE UNDER LOAD.
5. TRANSFORMER IS DEDICATED BASED ON UNIT VOLTAGE. TAPS ONLY SHOWN TO SIMPLIFY SCHEMATIC.

LEGEND

- MARKED WIRE
- TERMINAL (MARKED)
- TERMINAL (UNMARKED)
- TERMINAL BLOCK
- SPLICE
- SPLICE (MARKED)
- FACTORY WIRING
- FIELD CONTROL WIRING
- FIELD POWER WIRING
- CIRCUIT BOARD TRACE
- ACCESSORY OR OPTIONAL WIRING

ACCY	ACCESSORY
AWG	AMERICAN WIRE GAGE
BAS	BUILDING AUTOMATION NETWORK
CC	CONTACTOR,COMPRESSOR
C	COMMON
CAP	CAPACITOR
CB	CIRCUIT BREAKER
CCH	CRANKCASE HEATER
CCHR	CRANKCASE HEATER RELAY
CCHTS	CRANKCASE HEATER TEMP SWITCH
CLO	COMPRESSOR LOCKOUT
CLV	COOLING LIQUID VALVE
COFS	CONDENSATE OVERFLOW SWITCH
COM	SIGNAL COMMON
COMP	COMPRESSOR MOTOR
DDC	DIRECT DIGITAL CONTROL
DFB	DEFROST BOARD
DFT	DEFROST THERMOSTAT
EHR	ELECTRIC HEAT RELAY
ENTH	ENTHALPY
ERV	ENERGY RECOVERY VENTILATOR
ESL	ENTHALPY SENSOR - LOW
FB	FUSE BLOCK
FIOP	FACTORY INSTALLED OPTION
FPT	FREEZE PROTECTION THERMOSTAT
FST	FAN HOUSING TEMP SENSOR
FU	FUSE
G	THERMOSTAT FAN CALL
GR(GND)	GROUND
HACR	HEATING, AIR-CONDITIONING, REFRIGERATION BREAKER
HR	HEATER RELAY
HGRH	HOT GAS REHEAT
HPC	HEAD PRESSURE CONTROL
HPS	HIGH PRESSURE SWITCH
HUM	HUMIDISTAT
IAQ	INDOOR AIR QUALITY SENSORS
IFM	INDOOR FAN MOTOR
IFMC	INDOOR FAN MOTOR CONTROL
IFO	INDOOR FAN ON SIGNAL
IRH	INDOOR RELATIVE HUMIDITY
JMP	JUMPER
L1	LINE 1
LA	LOW AMBIENT LOCKOUT
LAR	LOW AMBIENT RELAY
LAS	LOW AMBIENT SWITCH
LDR	COMPRESSOR LOADER
LEN	LOCAL EQUIPMENT NETWORK
LOC	LOSS OF CHARGE
LOOP PWR	CURRENT LOOP POWER
LPS	LOW PRESSURE SWITCH
LS	LIMIT SWITCH
LSM	LIMIT SWITCH (MANUAL RESET)
LTLO	LOW TEMP LOCKOUT
MBB	MAIN BASE BOARD
MOV	METAL OXIDE VARISTOR
MTR	MOTOR
OAQ	OUTDOOR AIR QUALITY
OAT	OUTDOOR AIR TEMP. SEN
OFM	OUTDOOR FAN MOTOR
OFR	OUTDOOR FAN RELAY
OL	OVERLOAD
PER	POWER EXHAUST RELAY
PH	PHASE
PL	PLUG ASSEMBLY
POT	POTENTIOMETER
PMR	PHASE MONITOR RELAY
PS	PRESSURE SWITCH
PWM	PULSE WIDTH MODULATION
QT	QUADRUPLE TERMINAL
R	THERMOSTAT POWER
RAT	RETURN AIR TEMP. SEN
RDV	REHEAT DISCHARGE VALVE
RH	RELATIVE HUMIDITY
RLV	REHEAT LIQUID VALVE
RNET	LOCAL ACCESS NETWORK
RVS	REVERSING VALVE SOLENOID
SAT	SUPPLY AIR TEMP SENSOR
SDP	SYSTEM DISCHARGE PRESSURE
SPRH	SPACE RELATIVE HUMIDITY
SPT	SPACE TEMPERATURE SENSOR
SPTO	SPACE TEMPERATURE OFFSET
SSP	SYSTEM SUCTION PRESSURE
SW	SWITCH
TB	TERMINAL BLOCK
TDR	TIME DELAY RELAY
TRAN	TRANSFORMER
UCB	UNIT CONTROL BOARD
W1	1st STAGE OF HEATING CALL
W2	2nd STAGE OF HEATING CALL
Y1	1st STAGE OF COOLING CALL
Y2	2nd STAGE OF COOLING CALL

48TC002995 | -

Sequence of operation

General

The sequence below describes the sequence of operation for an electro-mechanical unit with and without a factory-installed EconoMi$er® IV (W7212 controller) and X (W7220 controller). For information regarding a direct digital controller, see the start-up, operations, and troubleshooting manual for the applicable controller.

Electro-Mechanical Units with No Economizer

Cooling (single stage units)

When the thermostat calls for cooling, terminals G and Y1 are energized. The indoor fan will run at the user set fan speed and the compressor contactor (CC) is energized causing the compressor and outdoor fan to run.

When the thermostat removes the call for Y1, the compressor contactor will de-energize shutting down the compressor and the outdoor fan. When the thermostat removes the call for G, the indoor fan will turn off after the specific unit fan off delay.

Cooling (two stage units)

When the thermostat calls for cooling, terminals G and Y1 are energized. The indoor fan will run at the low fan speed and the compressor contactor (CC) is energized causing the compressor and outdoor fan to run. The low indoor fan speed is 66% of the user set fan speed and the compressor will run at partial capacity.

If additional cooling is needed, the thermostat will add the call for Y2. This will increase the indoor fan speed to the user set fan speed and energize the compressor loader for full compressor capacity. The outdoor fan is the same speed for Y1 and Y2.

When the thermostat removes the call for Y2 but leaves the Y1, the indoor fan will reduce speed to 66% of the user set fan speed, the compressor loader will turn off, and the outdoor fan will remain on. When the thermostat removes the call for Y1 the compressor contactor will de-energize shutting down the compressor and the outdoor fan. When the thermostat removes the call for G, the indoor fan will turn off after the specific unit fan off delay.

NOTE: Per ASHRAE 90.1-2016 and IECC-2018 standards, during the first stage of cooling operation the Unit Control Board (UCB) will adjust the fan motor speed to provide 66% of the total cfm established for the unit.

Gas Heating (48FC units)

NOTE: WeatherMaker® units have either 1 or 2 stages of gas heat.

When the thermostat calls for heating, power is sent to W on the Integrated Gas Controller (IGC) board. An LED (light-emitting diode) on the IGC board turns on and remains on during normal operation. A check is made to ensure that the roll-out switch and limit switch are closed. If the check was successful, the induced-draft motor is energized, and when its speed is satisfactory, as proven by the flue gas pressure switch, the ignition activation period begins. The burners will ignite within 5 seconds. If the burners do not light, there is a 22 second delay before another 5 second attempt. This sequence is repeated for 15 minutes or until the burners light. If, after the 15 minutes, the burners still have not lit, heating is locked out. To reset the control, break 24 V power to the thermostat.

When ignition occurs, the IGC board will continue to monitor the condition of the roll-out switch, the limit switches, the flue gas pressure switch, as well as the flame sensor. 45 seconds after ignition occurs, assuming the unit is controlled through a room thermostat set for fan auto, the indoor-fan motor will energize (and the outdoor-air dampers will open to their minimum position). If, for some reason, the over-temperature limit opens prior to the start of the indoor fan blower, the unit will shorten the 45 second delay to 5 seconds less than the time from initiation of heat to when the limit tripped. Gas will not be interrupted to the burners and heating will continue. Once the fan-on delay has been modified, it will not change back to 45 seconds until power is reset to the control. On units with 2 stages of heat, when additional heat is required, W2 closes and initiates power to the second stage of the main gas valve. When the thermostat is satisfied, W1 and W2 open and the gas valve closes, interrupting the flow of gas to the main burners. If the unit is controlled through a room thermostat set for fan auto, the indoor-fan motor will continue to operate for an additional 45 seconds then stop. A LED indicator is provided on the IGC to monitor operation.

Electric Heating (50FC units)

NOTE: 50FC units are sold as cooling only. If electric heaters are required, use only factory-approved heaters. They will operate as follows.

Units have either 1 or 2 stages of electric heat. When the thermostat calls for heating, power is applied to G and the W1 terminals at the unit. The unit control will energize the indoor fan contactor and the first stage of electric heat. On units with two-stage heating, when additional heating is required, the second stage of electric heat (if equipped) will be energized when power is applied at the W2 terminal on the unit.

IMPORTANT: The thermostat must be configured for Electric Heat so it will energize G with the W1 call.

Electro-mechanical Units with Factory-Installed EconoMi$er

When free cooling is not available, the compressors will be controlled by the zone thermostat. When free cooling is available, the outdoor-air damper is modulated by the EconoMi$er IV and X control to provide a 50°F (10°C) to 55°F (13°C) mixed-air temperature into the zone. As the mixed air temperature fluctuates above 55°F (13°C) or below 50°F (10°C) dampers will be modulated (open or close) to bring the mixed-air temperature back within control. If mechanical cooling is utilized with free cooling, the outdoor-air damper will maintain its current position at the time the compressor is started. If the increase in cooling capacity causes the mixed-air temperature to drop below 45°F (7°C), then the outdoor-air damper position will be decreased to the minimum position. If the mixed-air temperature continues to fall, the outdoor-air damper will close. Control returns to normal once the mixed-air temperature rises above 48°F (9°C). The power exhaust fans will be energized and de-energized, if installed, as the outdoor-air damper opens and closes.

If field-installed accessory CO_2 sensors are connected to the EconoMi$er IV and X control, a demand controlled ventilation strategy will begin to operate. As the CO_2 level in the zone increases above the CO_2 set-point, the minimum position of the damper will be increased proportionally. As the CO_2 level decreases because of the increase in

fresh air, the outdoor-air damper will be proportionally closed. For EconoMi$er IV and X operation, there must be a thermostat call for the fan (G). If the unit is occupied and the fan is on, the damper will operate at minimum position. Otherwise, the damper will be closed.

When the EconoMi$er IV and X control is in the occupied mode and a call for cooling exists (Y1 on the thermostat), the control will first check for indoor fan operation. If the fan is not on, then cooling will not be activated. If the fan is on, then the control will open the EconoMi$er IV and X damper to the minimum position.

On the initial power to the EconoMi$er® IV and X control, it will take the damper up to $2^1/_2$ minutes before it begins to position itself. After the initial power-up, further changes in damper position can take up to 30 seconds to initiate. Damper movement from full closed to full open (or vice versa) will take between $1^1/_2$ and $2^1/_2$ minutes. If free cooling can be used as determined from the appropriate changeover command (switch, dry bulb, enthalpy curve, differential dry bulb, or differential enthalpy), then the control will modulate the dampers open to maintain the mixed-air temperature set-point at 50°F (10°C) to 55°F (13°C). If there is a further demand for cooling (cooling second stage — Y2 is energized), then the control will bring on compressor stage 1 to maintain the mixed-air temperature set-point. The EconoMi$er IV and X damper will be open at maximum position.

2-Speed Note: The EconoMi$er IV and X controller will adjust the damper position as the Indoor Fan Speed changes, per its configured values.

Heating

The sequence of operation for the heating is the same as an electro-mechanical unit with no economizer. The only difference is how the economizer acts. The economizer will stay at the Economizer Minimum Position while the evaporator fan is operating. The outdoor-air damper is closed when the indoor fan is not operating. Refer to Service and Maintenance Manual for further details.

Optional Humidi-MiZer® dehumidification system

Units with the factory equipped Humidi-MiZer system option are capable of providing multiple modes of improved dehumidification as a variation of the normal cooling cycle. The Humidi-MiZer system option includes additional valves in the liquid line and discharge line of each refrigerant circuit, a small reheat condenser coil downstream of the evaporator, and variable-speed control of some or all outdoor fans. Operation of the revised refrigerant circuit for each mode is described below.

The Humidi-MiZer system provides three sub-modes of operation: Cool, Reheat1, and Reheat2.

Cool mode — Provides a normal ratio of Sensible and Latent Cooling effect from the evaporator coil.

Reheat1 — Provides increased Latent Cooling while slightly reducing the Sensible Cooling effect.

Reheat2 — Provides normal Latent Cooling but with null or minimum Sensible Cooling effect delivered to the space.

The Reheat1 and Reheat2 modes are available when the unit is not in a Heating mode and when the Low Ambient Lockout switch is closed.

Refer to the following figures for single stage and 2 stage piping flow diagrams.

RTU Open controller (factory option)

For details on operating 48/50FC units equipped with the factory-installed RTU Open controller option, refer to Factory Installed RTU Open Multi-Protocol Controller Controls, Start-Up, Operation and Troubleshooting manual.

SystemVu™ controller (factory option)

For details on operating 48/50FC units equipped with the factory-installed SystemVu controller option, refer to FC/GC Series Single Package Rooftop Units with SystemVu Controller Controls, Start-Up, Operation and Troubleshooting manual.

NORMAL COOLING MODE — HUMIDI-MIZER® SYSTEM WITH SINGLE STAGE COOLING

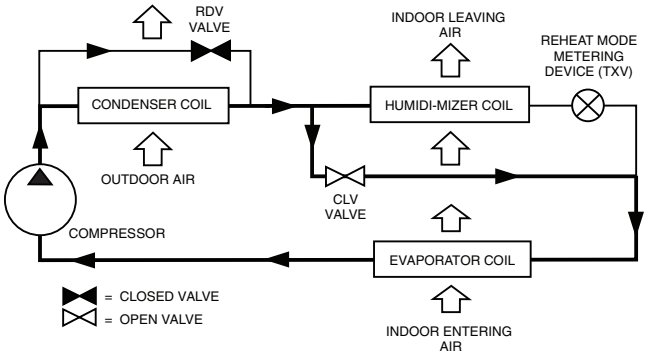

NORMAL COOLING MODE — HUMIDI-MIZER® SYSTEM WITH 2 STAGE COOLING

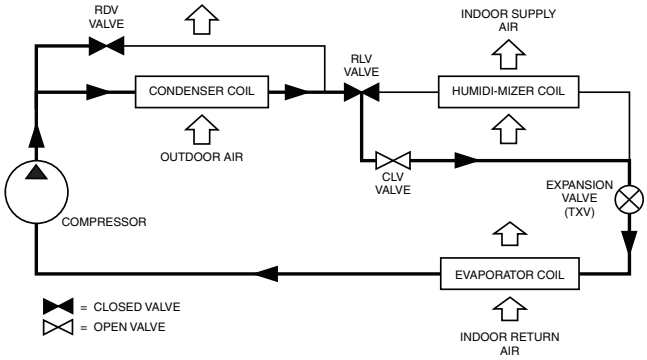

SUBCOOLING MODE (REHEAT 1) — HUMIDI-MIZER SYSTEM WITH SINGLE STAGE COOLING

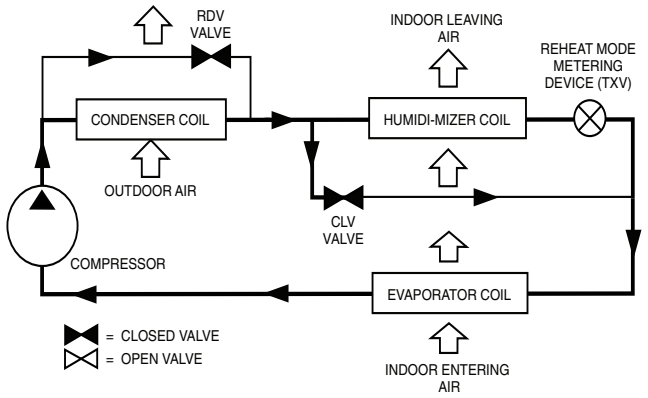

SUBCOOLING MODE (REHEAT 1) — HUMIDI-MIZER SYSTEM WITH 2 STAGE COOLING

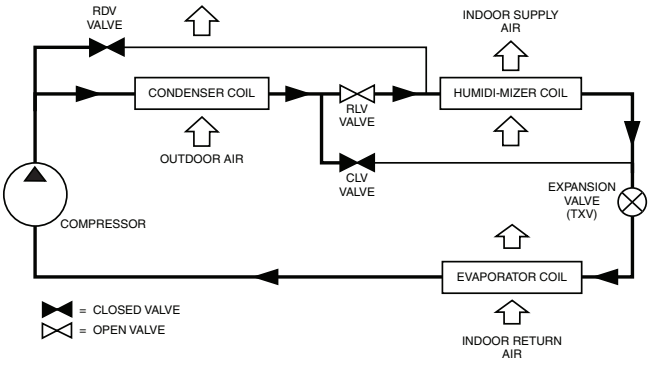

HOT GAS REHEAT MODE (REHEAT2) — HUMIDI-MIZER SYSTEM WITH SINGLE STAGE COOLING

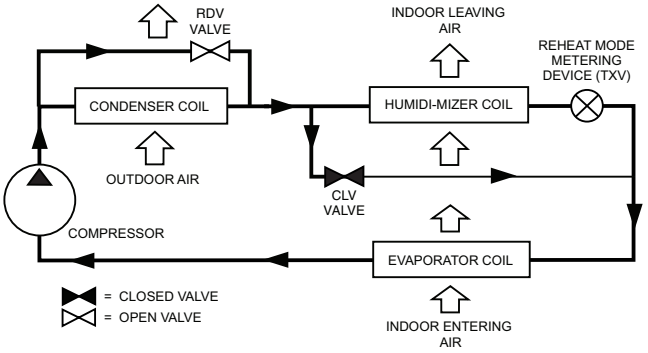

HOT GAS REHEAT MODE (REHEAT2) — HUMIDI-MIZER SYSTEM WITH 2 STAGE COOLING

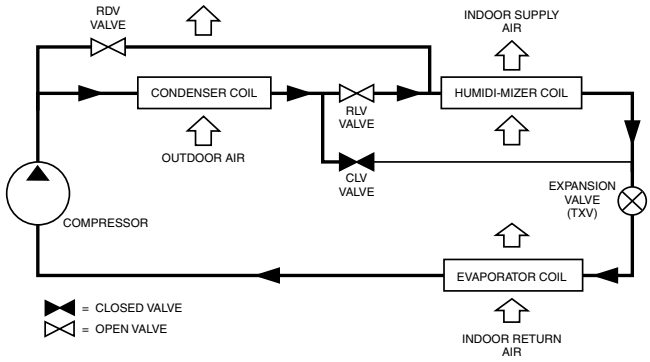

Minimum operating ambient temperature (cooling)

In mechanical cooling mode, your Carrier rooftop unit can safely operate down to an outdoor ambient temperature of 40°F (4°C). It is possible to provide cooling at lower outdoor ambient temperatures by using less outside air, economizers, and/or accessory low ambient kits.

Maximum operating ambient temperature (cooling)

The maximum operating ambient temperature for cooling mode is 115°F (46°C). While cooling operation above 115°F (46°C) may be possible, it could cause either a reduction in performance, reliability, or a protective action by the unit's internal safety devices.

Multiple motor and drive packages

Some applications need larger horsepower motors, some need more airflow, and some need both. Regardless of the case, your Carrier expert has a factory installed combination to meet your application. A wide selection of motors are available, factory installed, to handle nearly any application.

Stainless steel heat exchanger (48FC units only)

The stainless steel heat exchanger option provides the tubular heat exchanger be made out of a minimum 20 gage type 409 stainless steel for applications where the mixed air to the heat exchanger is expected to drop below 45°F (7°C). Stainless steel may be specified on applications where the presence of airborne contaminants require its use (applications such as paper mills) or in area with very high outdoor humidity that may result in severe condensation in the heat exchanger during cooling operation.

Minimum mixed air temperature (heating) (48FC units only)

Using the factory settings, the minimum temperatures for the mixed air (the combined temperature of the warm return air and the cold outdoor air) entering the dimpled, gas heat exchangers are shown in the following table.

MINIMUM TEMPERATURE FOR MIXED AIR TEMPERATURE

ALUMINIZED	STAINLESS STEEL
50°F (10°C) Continuous	40°F (4°C) Continuous
45°F (7°C) Intermittent	35°F (2°C) Intermittent

Operating at lower mixed-air temperatures may be possible, if a field-supplied, outdoor air thermostat initiates both heat stages when the temperature is less than the minimum temperatures listed above. Please contact your local Carrier representative for assistance.

Minimum and maximum airflow (heating and cooling)

To maintain safe and reliable operation of your rooftop, operate within the heating airflow limits during heating mode and cooling airflow limits during cooling mode. Operating above the max may cause blow-off, undesired airflow noise, or airflow related problems with the rooftop unit. Operating below the min may cause problems with coil freeze-up and unsafe heating operation. Heating and cooling limitations differ when evaluating operating CFM, the minimum value is the HIGHER of the cooling and heating minimum CFM values published on page 8 and the maximum value is the LOWER of the cooling and heating minimum values published on page 8.

Heating-to-cooling changeover

Your unit will automatically change from heating to cooling mode when using a thermostat with an auto-changeover feature.

Airflow

All units are draw-though in cooling mode and blow-through in heating mode.

Outdoor air application strategies

Economizers reduce operating expenses and compressor run time by providing a free source of cooling and a means of ventilation to match application changing needs. In fact, they should be considered for most applications. Also, consider the various economizer control methods and their benefits, as well as sensors required to accomplish your application goals. Please contact your local Carrier representative for assistance.

Motor limits, break horsepower (BHP)

Due to internal design of Carrier units, the air path, and specially designed motors, the full horsepower (maximum continuous BHP) band, as listed in the Fan Performance tables, can be used with the utmost confidence. There is no need for extra safety factors, as Carrier motors are designed and rigorously tested to use the entire, listed BHP range without either nuisance tripping or premature motor failure.

Propane heating (48FC units only)

Propane has different physical qualities than natural gas. As a result, propane requires different fuel to air mixture. To optimize the fuel/air mixture for propane, Carrier sells different burner orifices in an easy to install accessory kit. To select the correct burner orifices or determine the heat capacity for a propane application, use either the selection software, or the unit's service manual.

High altitude heating

High altitudes have less oxygen, which affects the fuel/air mixture in heat exchangers. In order to maintain a proper fuel/air mixture, heat exchangers operating in altitudes above 2000 ft (610 m) require different orifices. To select the correct burner orifices or determine the heat capacity for a high altitude application, use either the selection software, or the unit's service manual.

High altitudes have less oxygen, which means heat exchangers need less fuel. The new gas orifices in this field-installed kit make the necessary adjustment for high altitude applications. They restore the optimal fuel to air mixture and maintain healthy combustion on altitudes above 2000 ft (610 m).

NOTE: Typical natural gas heating value ranges from 975 to 1050 Btu/ft^3 at sea level nationally. The heating value goes down approximately 1.7% per every thousand feet elevation. Standard factory orifices can typically be used up to 2000 ft (610 m) elevation without any operational issues.

Sizing a rooftop

Bigger is not necessarily better. While an air conditioner needs to have enough capacity to meet the design loads, it does not need excess capacity. In fact, excess capacity typically results in very poor part load performance and humidity control.

Using higher design temperatures than ASHRAE recommends for your location, adding "safety factors" to the calculated load, are all signs of oversizing air conditioners. Oversizing the air conditioner leads to poor humidity control, reduced efficiency, higher utility bills, larger indoor temperature swings, excessive noise, and increased wear and tear on the air conditioner.

Rather than oversizing an air conditioner, engineers should "right-size" or even slightly "under-size" air conditioners. Correctly sizing an air conditioner controls humidity better; promotes efficiency; reduces utility bills; extends equipment life, and maintains even, comfortable temperatures. Please contact your local Carrier representative for assistance.

Low ambient applications

The optional Carrier economizer can adequately cool your space by bringing in fresh, cool outside air. In fact, when so equipped, accessory low-ambient kit may not be necessary. In low ambient conditions, unless the outdoor air is excessively humid or contaminated, economizer-based "free cooling" is the preferred less costly and energy conscious method. In low ambient applications where outside air might not be desired (such as contaminated or excessively humid outdoor environments), your Carrier rooftop can operate to ambient temperatures down to –20°F (–29°C) using the recommended accessory low ambient controller.

Guide specifications

Note about this specification:
This specification is in the "Masterformat" as published by the Construction Specification Institute. Please feel free to copy this specification directly into your building spec.

Gas Heat/Electric Cooling Packaged Rooftop

HVAC Guide Specifications

Size Range: **3 to 6 Nominal Tons**

Carrier Model Number: **48FC*04-07**

Part 1 — (23 06 80) Schedules for Decentralized HVAC Equipment

1.01 (23 06 80.13) Decentralized Unitary HVAC Equipment Schedule

A. (23 06 80.13.A.) Rooftop unit (RTU) schedule:

1. Schedule is per the project specification requirements.

Part 2 — (23 07 16) HVAC equipment insulation

2.01 (23 07 16.13) Decentralized, Rooftop Units:

A. (23 07 16.13.A.) Evaporator fan compartment:

1. Interior cabinet surfaces shall be insulated with a minimum $^1/_2$-in. thick, minimum $1^1/_2$-lb density, flexible fiberglass insulation bonded with a phenolic binder, neoprene coated on the air side.
2. Insulation and adhesive shall meet NFPA 90A requirements for flame spread and smoke generation.

B. (23 07 16.13.B.) Gas Heat Compartment:

1. Aluminum foil-faced fiberglass insulation shall be used.
2. Insulation and adhesive shall meet NFPA 90A requirements for flame spread and smoke generation.

Part 3 — (23 09 13) Instrumentation and control devices for HVAC

3.01 (23 09 13.23) Sensors and Transmitters

A. (23 09 13.23.A.) Thermostats

1. Thermostat must
   a. energize both "W" and "G" when calling for heat.
   b. have capability to energize 1 or 2 stages of cooling, and 2 different stages of heating.
   c. include capability for occupancy scheduling.

Part 4 — (23 09 23) Direct Digital Control system for HVAC

4.01 (23 09 23.13) Decentralized, Rooftop Units:

A. (23 09 23.13.A.) SystemVu™ intelligent integrated Direct Digital Control (DDC) shall provide:

1. Integrated unit operation for comfort cooling, heating ventilation as well as all monitoring, recording and reporting capabilities. Controller shall also provide diagnostics and alarms of abnormal unit operation through the controller. Controller shall have an intuitive user display and be able to be used in a standalone operation or via building automation system (BAS).
2. Quick Unit Status LEDs of: Run – meaning all systems are go, ALERT – that indicates there is currently a non-critical issue with the unit, like filters need to be replaced and FAULT – that indicates the unit has a critical issue and will possibly shut down.
3. Six large navigation keys for easy access. Navigation keys shall consist of: TEST, BACK, ENTER, and MENU along with UP and DOWN arrows.
4. Full back lit user display with 4 line by 30 character text capabilities. Display menu shall be designed to provide guided major menus and sub menus main menus provided below:
   a. Shutdown Unit
   b. Run Status
   c. Settings
   d. Alerts/Faults
   e. Service
   f. Inputs
   g. Outputs
   h. USB
5. The capability for standalone operation with conventional thermostat/sensor or use with building automation systems (BAS) of Carrier i-Vu®, BACnet and Carrier Comfort Network® (CCN) systems. No special modules or boards are required for these capabilities. Has the capability to work with Equipment Touch™ and System Touch™ devices and ZS Sensors.
6. The ability to read refrigerant pressures at display or via BAS network of; Discharge Pressure and Suction Pressure. The need for traditional refrigerant gages is not required.
7. USB Data Port for flash drive interaction. This will allow the transfer of data for uploads, downloads, perform software upgrades, backup and restore data and file transfer data such as component number of starts and run hours.
8. Reverse Rotation Protection of compressors if field three phase wiring is misapplied.
9. Provide Service Capabilities of:
   a. Auto run test
   b. Manual run test
   c. Component run hours and starts
   d. Commissioning reports
   e. Data logging
   f. Alarm history

10. Economizer control and diagnostics. Set up economizer operation, receive feedback from actuator. Also meets the most recent California Title 24, ASHRAE 90.1 and IECC Fault Detection and Diagnostic (FDD) requirements.
11. Unit cooling operation down to 40°F (4°C).
12. Controller shall have easy access connections around the controller perimeter area and consist of Mate-N-Lok, terminal block and RJ style modular jack connections.
13. 365 day real time clock, 20 holiday schedules along with occupied and unoccupied scheduling.
14. Auto-Recognition for easy installation and commissioning of devices like economizers, space sensors etc.
15. A 5°F temperature difference between cooling and heating set points to meet the latest ASHRAE 90.1 Energy Standard.
16. Contain return air sensor, supply air sensor and outdoor air sensor to help monitor and provide data for the unit comfort operation, diagnostic and alarms.
17. Use of Carrier's field accessory hand-held Navigator™ display, Equipment Touch and System Touch devices.
18. Units with the factory-installed Humidi-MiZer® system option are capable of providing multiple modes of improved dehumidification as a variation of the normal cooling cycle.
19. Supply Air Tempering control operates the gas or electric heat to maintain a minimum supply air temperature during conditions where very cold outdoor air causes the supply air temperature to fall below the configured Supply Air Tempering Setpoint. This occurs during periods where DCV is active and increasing the amount of outdoor air or in cases where the system is operating at very low airflow and the calculated economizer position has increased to maintain a constant ventilation rate.
20. Demand limiting in SystemVu™ is achieved through set point expansion. The systems heating and cooling set points are expanded in steps or levels. The degree to which the set points may be expanded is defined by the 6 demand level offsets and the 2 commanded demand limit levels.
21. 3-year limited part warranty.

B. (23 09 23.13.B.) RTU Open Protocol, Direct Digital Controller:
1. Shall be ASHRAE 62 compliant.
2. Shall accept 18 - 30VAC, 50 - 60Hz, and consumer 15VA or less power.
3. Shall have an operating temperature range from –40°F (–40°C) to 130°F (54°C), 10% to 90% RH (non-condensing).
4. Shall include built-in protocol for BACnet[1] (MS/TP and PTP modes), Modbus[2] (RTU and ASCII), Johnson N2 and LonWorks[3]. LonWorks Echelon processor required for all Lon applications shall be contained in separate communication board.
5. Shall allow access of up to 62 network variables (SNVT). Shall be compatible with all open controllers.
6. Baud rate controller shall be selectable using a dipswitch.
7. Shall have an LED display independently showing the status of serial communication, running, errors, power, all digital outputs, and all analog inputs.
8. Shall accept the following inputs: space temperature, setpoint adjustment, outdoor air temperature, indoor air quality, outdoor air quality, compressor lock-out, fire shutdown, enthalpy switch, and fan status/filter status/humidity/remote occupancy.
9. Shall provide the following outputs: economizer, fan, cooling stage 1, cooling stage 2, heat stage 1, heat stage 2, exhaust, reversing valve/high fan speed.
10. Shall have built-in surge protection circuitry through solid-state polyswitches. Polyswitches shall be used on incoming power and network connections. Polyswitches will return to normal when the "trip" condition clears.
11. Shall have a battery back-up capable of a minimum of 10,000 hours of data and time clock retention during power outages.
12. Shall have built-in support for Carrier technician tool.
13. Shall include an RS-485 protocol communication port, an access port for connection of either a computer or a Carrier technician tool, an RS-485 port for network communication to intelligent space sensors and displays, and a port to connect an optional LonWorks communications card.
14. Software upgrades will be accomplished by either local or remote download. No software upgrades through chip replacements are allowed.

Part 5 — (23 09 33) Electric and Electronic Control System for HVAC

5.01 (23 09 33.13) Decentralized, Rooftop Units:

A. (23 09 33.13.A.) General:
1. Shall be complete with self-contained low-voltage control circuit protected by a resettable circuit breaker on the 24-v transformer side. Transformer shall have 75VA capability.

1. BACnet is a trademark of ASHRAE.
2. Modbus is a registered trademark of Schneider Electric.
3. LonWorks is a registered trademark of Echelon Corporation.

2. Shall utilize color-coded wiring.
3. Shall include a Unit Control Board to conveniently and safely provide connection points for vital control functions such as: smoke detectors, phase monitor, gas controller, economizer, thermostat, DDC control options, and low and high pressure switches. Controller shall also provide an intuitive means to adjust the indoor fan speed through a simple switch and pot adjustment design.
4. The heat exchanger shall be controlled by an integrated gas controller (IGC) microprocessor. See heat exchanger section of this specification.
5. Unit shall include a minimum of one 8-pin screw terminal connection board for connection of control wiring.

B. (23 09 33.13.B.) Safeties:
1. Compressor over-temperature, over-current. High internal pressure differential.
2. Low pressure switch.
   a. Low pressure switch shall use different color wire than the high pressure switch. The purpose is to assist the installer and service technician to correctly wire and or troubleshoot the rooftop unit.
3. High pressure switch.
   a. High pressure switch shall use different color wire than the low pressure switch. The purpose is to assist the installer and service technician to correctly wire and or troubleshoot the rooftop unit.
4. Automatic reset, motor thermal overload protector.
5. Heating section shall be provided with the following minimum protections:
   a. High temperature limit switches.
   b. Induced draft motor speed sensor.
   c. Flame rollout switch.
   d. Flame proving controls.

Part 6 — (23 09 93) Sequence of Operations for HVAC Controls

6.01 (23 09 93.13) Decentralized, Rooftop Units:

A. (23 09 93.13.A.) INSERT SEQUENCE OF OPERATION

Part 7 — (23 40 13) Panel Air Filters

7.01 (23 40 13.13) Decentralized, Rooftop Units:

A. (23 40 13.13.A.) Standard filter section:
1. Shall consist of factory installed, low velocity, disposable 2-in. thick fiberglass filters of commercially available sizes.
2. Unit shall use only one filter size. Multiple sizes are not acceptable.
3. Filters shall be accessible through an access panel with "no-tool" removal as described in the unit cabinet section of this specification (23 81 19.13.G).

Part 8 — (23 81 19) Self-Contained Air Conditioners

8.01 (23 81 19.13) Small-Capacity Self-Contained Air Conditioners:

A. (23 81 19.13.A.) General:
1. Outdoor, rooftop mounted, electrically controlled, heating and cooling unit utilizing a fully hermetic scroll compressor(s) for cooling duty and gas combustion for heating duty.
2. Factory assembled, single-piece heating and cooling rooftop unit. Contained within the unit enclosure shall be all factory wiring, piping, controls, and special features required prior to field start-up.
3. Unit shall use Puron® (R-410A) refrigerant.
4. Unit shall be installed in accordance with the manufacturer's instructions.
5. Unit must be selected and installed in compliance with local, state, and federal codes.

B. (23 81 19.13.B.) Quality Assurance:
1. Unit meets ASHRAE 90.1 minimum efficiency requirements.
2. Unit shall be rated in accordance with AHRI Standards 210/240 (04-06 sizes) or 340/360 (07 size).
3. Unit shall be designed to conform to ASHRAE 15.
4. Unit shall be UL-tested and certified in accordance with ANSI Z21.47 Standards and UL-listed and certified under Canadian standards as a total package for safety requirements.
5. Insulation and adhesive shall meet NFPA 90A requirements for flame spread and smoke generation.
6. Unit casing shall be capable of withstanding 500 hour salt spray exposure per ASTM B117 (scribed specimen).
7. Unit shall be designed in accordance with ISO 9001, and shall be manufactured in a facility registered by ISO 9001:2015.
8. Roof curb shall be designed to conform to NRCA Standards.
9. Unit shall be subjected to a completely automated run test on the assembly line. The data for each unit will be stored at the factory, and must be available upon request.
10. Unit shall be designed in accordance with UL Standard 1995, including tested to withstand rain.
11. Unit shall be constructed to prevent intrusion of snow and tested to prevent snow intrusion into the control box up to 40 mph.
12. Unit shake tested to assurance level 1, ASTM D4169 to ensure shipping reliability.

C. (23 81 19.13.C.) Delivery, Storage, and Handling:
   1. Unit shall be stored and handled per manufacturer's recommendations.
   2. Lifted by crane requires either shipping top panel or spreader bars.
   3. Unit shall only be stored or positioned in the upright position.

D. (23 81 19.13.D.) Project Conditions:
   1. As specified in the contract.

E. (23 81 19.13.E.) Operating Characteristics:
   1. Unit shall be capable of starting and running at 115°F (46°C) ambient outdoor temperature, meeting maximum load criteria of AHRI Standard 210/240 or 340/360 at ±10% voltage.
   2. Compressor with standard controls shall be capable of operation down to 40°F (4°C), ambient outdoor temperatures. Accessory winter start kit is necessary if mechanically cooling at ambient temperatures down to 25°F (–4°C).
   3. Unit shall discharge supply air vertically or horizontally as shown on contract drawings.
   4. Unit shall be factory configured for vertical supply and return configurations.
   5. Unit shall be field convertible from vertical to horizontal airflow on all models. No special kit required.
   6. Unit shall be capable of mixed operation: vertical supply with horizontal return or horizontal supply with vertical return.

F. (23 81 19.13.F.) Electrical Requirements:
   1. Main power supply voltage, phase, and frequency must match those required by the manufacturer.

G. (23 81 19.13.G.) Unit Cabinet:
   1. Unit cabinet shall be constructed of galvanized steel, and shall be bonderized and coated with a prepainted baked enamel finish on all externally exposed surfaces.
   2. Unit cabinet exterior paint shall be: film thickness, (dry) 0.003 inches minimum, gloss (per ASTM D523, 60°F/16°C): 60, Hardness: H-2H Pencil hardness.
   3. Evaporator fan compartment interior cabinet insulation shall conform to AHRI Standards 210/240 and or 340/360 minimum exterior sweat criteria. Interior surfaces shall be insulated with a minimum $^1/_2$-in. thick, 1 lb density, flexible fiberglass insulation, neoprene coated on the air side. Aluminum foil-faced fiberglass insulation shall be used in the gas heat compartment.
   4. Base of unit shall have a minimum of four locations for thru-the-base gas and electrical connections (factory-installed or field-installed), standard.
   5. Base Rail:
      a. Unit shall have base rails on a minimum of 2 sides.
      b. Holes shall be provided in the base rails for rigging shackles to facilitate maneuvering and overhead rigging.
      c. Holes shall be provided in the base rail for moving the rooftop by fork truck.
      d. Base rail shall be a minimum of 16 gage thickness.
   6. Condensate pan and connections:
      a. Shall be a sloped condensate drain pan made of a corrosion resistant material.
      b. Shall comply with ASHRAE Standard 62.
      c. Shall use a $^3/_4$-in. 14 NPT drain connection, possible either through the bottom or side of the drain pan. Connection shall be made per manufacturer's recommendations.
   7. Top panel:
      a. Shall be a single piece top panel on all sizes.
   8. Gas Connections:
      a. All gas piping connecting to unit gas valve shall enter the unit cabinet at a single location on side of unit (horizontal plane).
      b. Thru-the-base capability
         1) Standard unit shall have a thru-the-base gas-line location using a raised, embossed portion of the unit basepan.
         2) Optional, factory approved, water-tight connection method must be used for thru-the-base gas connections.
         3) No basepan penetration, other than those authorized by the manufacturer, is permitted.
   9. Electrical Connections:
      a. All unit power wiring shall enter unit cabinet at a single, factory prepared, knockout location.
      b. Thru-the-base capability.
         1) Standard unit shall have a thru-the-base electrical location(s) using a raised, embossed portion of the unit basepan.
         2) Optional, factory approved, water-tight connection method must be used for thru-the-base electrical connections.
         3) No basepan penetration, other than those authorized by the manufacturer, is permitted.
   10. Component access panels (standard):
      a. Cabinet panels shall be easily removable for servicing.
      b. Unit shall have one factory installed, toolless, removable, filter access panel.

c. Panels covering control box, indoor fan, indoor fan motor, gas components (where applicable), and compressors shall have molded composite handles.

d. Handles shall be UV modified, composite. They shall be permanently attached, and recessed into the panel.

e. Screws on the vertical portion of all removable access panel shall engage into heat resistant, molded composite collars.

f. Collars shall be removable and easily replaceable using manufacturer recommended parts.

H. (23 81 19.13.H.) Gas Heat:

1. General:

a. Heat exchanger shall be an induced draft design. Positive pressure heat exchanger designs shall not be allowed.

b. Shall incorporate a direct-spark ignition system and redundant main gas valve.

c. Gas supply pressure at the inlet to the rooftop unit gas valve must match that required by the manufacturer.

2. The heat exchanger shall be controlled by an integrated gas controller (IGC) microprocessor.

a. IGC board shall notify users of fault using an LED (light-emitting diode).

b. The LED shall be visible without removing the control box access panel.

c. IGC board shall contain algorithms that modify evaporator fan operation to prevent future cycling on high temperature limit switch.

d. Unit shall be equipped with anti-cycle protection with one short cycle on unit flame rollout switch or 4 continuous short cycles on the high temperature limit switch. Fault indication shall be made using an LED.

3. Standard Heat Exchanger construction:

a. Heat exchanger shall be of the tubular-section type constructed of a minimum of 20-gage steel coated with a nominal 1.2 mil aluminum-silicone alloy for corrosion resistance.

b. Burners shall be of the in-shot type constructed of aluminum-coated steel.

c. Burners shall incorporate orifices for rated heat output up to 2000 ft (610 m) elevation. Additional accessory kits may be required for applications above 2000 ft (610 m) elevation, depending on local gas supply conditions.

d. Each heat exchanger tube shall contain multiple dimples for increased heating effectiveness.

4. Optional Stainless Steel Heat Exchanger construction:

a. Use energy saving, direct-spark ignition system.

b. Use a redundant main gas valve.

c. Burners shall be of the in-shot type constructed of aluminum-coated steel.

d. All gas piping shall enter the unit cabinet at a single location on side of unit (horizontal plane).

e. The optional stainless steel heat exchanger shall be of the tubular-section type, constructed of a minimum of 20-gage type 409 stainless steel.

f. Type 409 stainless steel shall be used in heat exchanger tubes and vestibule plate.

g. Complete stainless steel heat exchanger allows for greater application flexibility.

5. Optional Low NOx Heat Exchanger construction:

a. Low NOx reduction shall be provided to reduce nitrous oxide emissions to meet California's Air Quality Management District (SCAQMD) low-NOx emissions requirement of 40 nanograms per joule or less.

b. Primary tubes and vestibule plates on low NOx units shall be 409 stainless steel. Other components shall be aluminized steel.

6. Induced draft combustion motor and blower

a. Shall be a direct-drive, single inlet, forward-curved centrifugal type.

b. Shall be made from steel with a corrosion resistant finish.

c. Shall have permanently lubricated sealed bearings.

d. Shall have inherent thermal overload protection.

e. Shall have an automatic reset feature.

I. (23 81 19.13.I.) Coils:

1. Standard Aluminum Fin-Copper Tube Coils:

a. Standard evaporator and condenser coils shall have aluminum lanced plate fins mechanically bonded to seamless internally grooved copper tubes with all joints brazed.

b. Evaporator coils shall be leak tested to 150 psig, pressure tested to 450 psig, and qualified to UL 1995 burst test at 1775 psig.

c. Condenser coils shall be leak tested to 150 psig, pressure tested to 650 psig, and qualified to UL 1995 burst test at 1980 psig.

2. Optional Pre-coated aluminum-fin condenser coils (3 Phase Models Only):

a. Shall have a durable epoxy-phenolic coating to provide protection in mildly corrosive coastal environments.

b. Coating shall be applied to the aluminum fin stock prior to the fin stamping process to create an inert barrier between the aluminum fin and copper tube.

c. Epoxy-phenolic barrier shall minimize galvanic action between dissimilar metals.

d. Corrosion durability of fin stock shall be confirmed through testing to be no less than 1000 hours salt spray per ASTM B117-90.

e. Corrosion durability of fin stock shall be confirmed through testing to have no visible corrosion after 48 hour immersion in a room temperature solution of 5% salt, 1% acetic acid.

f. Fin stock coating shall pass 2000 hours of the following: one week exposure in the prohesion chamber followed by one week of accelerated ultraviolet light testing. Prohesion chamber: the solution shall contain 3.5% sodium chloride and 0.35% ammonium sulfate. The exposure cycle is one hour of salt fog application at ambient followed by one hour drying at 95°F (35°C).

3. Optional Copper-fin evaporator and condenser coils (3 Phase Models Only):

a. Shall be constructed of copper fins mechanically bonded to copper tubes and copper tube sheets.

b. Galvanized steel tube sheets shall not be acceptable.

c. A polymer strip shall prevent coil assembly from contacting the sheet metal coil pan to minimize potential for galvanic corrosion between coil and pan.

4. Optional E-coated aluminum-fin evaporator and condenser coils (3 Phase Models Only):

a. Shall have a flexible epoxy polymer coating uniformly applied to all coil surface areas without material bridging between fins.

b. Coating process shall ensure complete coil encapsulation of tubes, fins and headers.

c. Color shall be high gloss black with gloss per ASTM D523-89.

d. Uniform dry film thickness from 0.8 to 1.2 mil on all surface areas including fin edges.

e. Superior hardness characteristics of 2H per ASTM D3363-92A and cross-hatch adhesion of 4B-5B per ASTM D3359-93.

f. Impact resistance shall be up to 160 in. lb (ASTM D2794-93).

g. Humidity and water immersion resistance shall be up to minimum 1000 and 250 hours respectively (ASTM D2247-92 and ASTM D870-92).

h. Corrosion durability shall be confirmed through testing to be no less than 1000 hours salt spray per ASTM B117-90.

J. (23 81 19.13.J.) Refrigerant Components:

1. Refrigerant circuit shall include the following control, safety, and maintenance features:

a. Fixed orifice metering system on 04-06 models and TXV on 07 size models shall include a multiple feed distribution system that optimizes coil performance.

b. Refrigerant filter drier - Solid core design.

c. Service gage connections on suction and discharge lines.

d. Pressure gage access through a specially designed access port in the top panel of the unit.

2. There shall be gage line access port in the skin of the rooftop, covered by a black, removable plug.

a. The plug shall be easy to remove and replace.

b. When the plug is removed, the gage access port shall enable maintenance personnel to route their pressure gage lines.

c. This gage access port shall facilitate correct and accurate condenser pressure readings by enabling the reading with the compressor access panel on.

d. The plug shall be made of a leak proof, UV-resistant, composite material.

3. Compressors:

a. Unit shall use fully hermetic, scroll compressor for each independent refrigeration circuit.

b. Compressor motors shall be cooled by refrigerant gas passing through motor windings.

c. Compressors shall be internally protected from high discharge temperature conditions.

d. Compressors shall be protected from an over-temperature and over-amperage conditions by an internal, motor overload device.

e. Compressor shall be factory mounted on rubber grommets.

f. Compressor motors shall have internal line break thermal, current overload and high pressure differential protection.

g. Crankcase heaters shall not be required for normal operating range, unless required by compressor manufacturer due to refrigerant charge limits.

h. Compressor on 04-06 models shall be of a single stage cooling capacity design and 07 models shall be a two stage cooling capacity design.

K. (23 81 19.13.K.) Filter Section:
   1. Filters access is specified in the unit cabinet section of this specification.
   2. Filters shall be held in place by a pivoting filter tray, facilitating easy removal and installation.
   3. Shall consist of factory installed, low velocity, throw-away 2-in. thick fiberglass filters.
   4. Filters shall be standard, commercially available sizes.
   5. Only one size filter per unit is allowed.

L. (23 81 19.13.L.) Evaporator Fan and Motor with EcoBlue™ Technology:
   1. Direct Drive Evaporator fan motor:
      a. Shall be a ECM motor design.
      b. Shall have permanently lubricated bearings.
      c. Shall have inherent automatic-reset thermal overload protection.
      d. Shall have slow ramp up to speed capabilities.
      e. Shall require no fan/motor belts for operation, adjustments and or initial fan speed set up.
      f. Fan DC voltage set up on Unit Control Board can eliminate the need of removal of blower access door, required on conventional belt drive systems.
      g. Shall be internally protected from electrical phase reversal and loss.
   2. Evaporator Fan:
      a. Shall be easily set with dedicated selection switch and adjustment pot on unit control board or through SystemVu™ controller.
      b. On sizes 04-06 single speed indoor fan operation provided and on 07 size model with two stage cooling capacity control, the indoor fan speed is automatically controlled to meet the code-compliant 66% low fan speed and 100% at full fan speed operation.
      c. Blower fan shall be a Vane Axial fan design with 75% less moving parts than a conventional belt drive system.
      d. Shall be constructed of a cast aluminum stator and high impact composite material on rotor and air inlet casing.
      e. Shall be a patented / pending design with a corrosion resistant material and dynamically balanced.
      f. Shall have slow ramp up to speed capabilities to help reduce sound and comfort issues typically associated with single speed belt drive systems.
      g. Shall be a slide out design with two screw removal.
   3. Shall include an easily accessible unit Control Board to conveniently and safely provide connection points for vital control functions such as: smoke detectors, phase monitor, gas controller, economizer, thermostat, DDC control options, and low and high pressure switches. Controller shall also provide an intuitive means to adjust the indoor fan speed through a simple switch and pot adjustment design.

M. (23 81 19.13.M.) Condenser Fans and Motors:
   1. Condenser fan motors:
      a. Shall be a totally enclosed motor.
      b. Shall use permanently lubricated bearings.
      c. Shall have inherent thermal overload protection with an automatic reset feature.
      d. Shall use a shaft-down design on all sizes.
   2. Condenser Fans:
      a. Shall be a direct-driven propeller type fan constructed of high impact composite material.
      b. Shall have high impact composite blades completely formed into one piece without blade fasteners or connectors and shall be dynamically balanced.

N. (23 81 19.13.N.) Special Features Options and Accessories:
   1. Integrated EconoMi$er® IV, EconoMi$er2, and EconoMi$er X low leak rate models. (EconoMi$er 2, IV and X are factory-installed on 04-06 models. EconoMi$er 2 and X are factory-installed on 07 models. All are field-installed on all 3 and 1 phase models.)
      a. Integrated, gear driven opposing modulating blade design type capable of simultaneous economizer and compressor operation.
      b. Independent modules for vertical or horizontal return configuration shall be available. Vertical return modules shall be available as a factory installed option.
      c. Damper blades shall be galvanized steel with composite gears. Plastic or composite blades on intake or return shall not be acceptable.
      d. Shall include all hardware and controls to provide free cooling with outdoor air when temperature and/or humidity are below setpoints.
      e. Shall be equipped with gear driven dampers for both the outdoor ventilation air and the return air for positive air stream control.
      f. Standard leak rate shall be equipped with dampers not to exceed 2% leakage at 1 in. wg pressure differential.

g. Economizer controller on EconoMi$er IV models shall be Honeywell W7212 that provides:
   1) Combined minimum and DCV maximum damper position potentiometers with compressor staging relay.
   2) Functions with solid-state analog enthalpy or dry bulb changeover control sensing.
   3) LED indicators for: when free cooling is available, when module is in DCV mode, when exhaust fan contact is closed.

h. Economizer controller on EconoMi$er X models shall be the Honeywell W7220 that provides:
   1) 2-line LCD interface screen for setup, configuration and troubleshooting.
   2) On-board Fault Detection and Diagnostics (FDD) that senses and alerts when the economizer is not operating properly, per California Title 24, ASHRAE 90.1 and IECC[1].
   3) Sensor failure loss of communication identification.
   4) Automatic sensor detection.
   5) Capabilities for use with multiple-speed or single speed indoor fan systems.
   6) Utilize digital sensors: Dry bulb and Enthalpy.

i. Economizer controller on EconoMi$er 2 models with RTU Open or SystemVu™ controls shall be a 4 to 20mA design controlled directly by the controller. RTU Open and SystemVu meet California Title 24, ASHRAE 90.1 and IECC Fault Detection and Diagnostic (FDD) requirements.

j. Shall be capable of introducing up to 100% outdoor air.

k. Shall be equipped with a barometric relief damper capable of relieving up to 100% return air and contain seals that meet ASHRAE 90.1 requirements.

l. Shall be designed to close damper(s) during loss-of-power situations with spring return built into motor.

m. Dry bulb outdoor air temperature sensor shall be provided as standard. Enthalpy sensor is also available on factory-installed economizers only. Outdoor air sensor setpoint shall be adjustable and shall range from 40°F to 100°F (4°C to 38°C). Additional sensor options shall be available as accessories.

n. The economizer controller shall also provide control of an accessory power exhaust unit function. Factory set at 100%, with a range of 0% to 100%.

o. The economizer shall maintain minimum airflow into the building during occupied period and provide design ventilation rate for full occupancy.

p. Dampers shall be completely closed when the unit is in the unoccupied mode.

q. Economizer controller shall accept a 2 to 10 Vdc CO_2 sensor input for IAQ/DCV control. In this mode, dampers shall modulate the outdoor air damper to provide ventilation based on the sensor input.

r. Compressor lockout temperature on W7220 control is adjustable from –45°F to 80°F, set at a factory default of 32°F. W7212 control opens at 35°F (2°C) and closes at 50°F (10°C).

s. Actuator shall be direct coupled to economizer gear. No linkage arms or control rods shall be acceptable.

t. Economizer controller shall provide indications when in free cooling mode, in the DCV mode, or the exhaust fan contact is closed.

2. Integrated EconoMi$er®2, and EconoMi$er X Ultra Low Leak rate models. (Factory-installed on 3 phase models only. Field-installed on all 3 and 1 phase models.)
   a. Integrated, gear driven opposing modulating blade design type capable of simultaneous economizer and compressor operation.
   b. Independent modules for vertical or horizontal return configuration shall be available. Vertical return modules shall be available as a factory installed option.
   c. Damper blades shall be galvanized steel with composite gears. Plastic or composite blades on intake or return shall not be acceptable.
   d. Shall include all hardware and controls to provide free cooling with outdoor air when temperature and/or humidity are below setpoints.
   e. Shall be equipped with gear driven dampers for both the outdoor ventilation air and the return air for positive air stream control.
   f. Ultra Low Leak design meets California Title 24 section 140.4 and ASHRAE 90.1 requirements for 4 cfm per sq.ft on the outside air dampers and 10 cfm per sq. ft on the return dampers.
   g. Economizer controller on EconoMi$er X models shall be the Honeywell W7220 that provides:
      1) 2-line LCD interface screen for setup, configuration and troubleshooting.
      2) On-board Fault Detection and Diagnostics (FDD) that senses and alerts when

1. IECC is a registered trademark of the International Code Council, Inc.

the economizer is not operating properly, per California Title 24, ASHRAE 90.1 and IECC.

3) Sensor failure loss of communication identification.

4) Automatic sensor detection.

5) Capabilities for use with multiple-speed indoor fan systems.

6) Utilize digital sensors: Dry bulb and Enthalpy.

h. Economizer controller on EconoMi$er 2 models with RTU Open or SystemVu™ controls shall be a 4-20mA design controlled directly by the controller. RTU Open and SystemVu meet California Title 24, ASHRAE 90.1 and IECC Fault Detection and Diagnostic (FDD) requirements.

i. Shall be capable of introducing up to 100% outdoor air.

j. Shall be equipped with a barometric relief damper capable of relieving up to 100% return air and contain seals that meet ASHRAE 90.1 requirements.

k. Shall be designed to close damper(s) during loss-of-power situations with spring return built into motor.

l. Dry bulb outdoor air temperature sensor shall be provided as standard. Enthalpy sensor is also available on factory-installed economizers only. Outdoor air sensor setpoint shall be adjustable and shall range from 40°F to 100°F (4°C to 38°C). Additional sensor options shall be available as accessories.

m. The economizer controller shall also provide control of an accessory power exhaust unit function. Factory set at 100%, with a range of 0% to 100%.

n. The economizer shall maintain minimum airflow into the building during occupied period and provide design ventilation rate for full occupancy.

o. Dampers shall be completely closed when the unit is in the unoccupied mode.

p. Economizer controller shall accept a 2 to 10 vdc CO_2 sensor input for IAQ/DCV control. In this mode, dampers shall modulate the outdoor air damper to provide ventilation based on the sensor input.

q. Compressor lockout temperature on W7220 control is adjustable from –45°F to 80°F, set at a factory default of 32°F. W7212 control opens at 35°F (2°C) and closes at 50°F (10°C).

r. Actuator shall be direct coupled to economizer gear. No linkage arms or control rods shall be acceptable.

s. Economizer controller shall provide indications when in free cooling mode, in the DCV mode, or the exhaust fan contact is closed.

3. Two-Position Damper (Factory-installed on 3-Phase 04-06 Models Only. Field-installed on all 3 and 1 Phase Models):

a. Damper shall be a Two-Position Damper. Damper travel shall be from the full closed position to the field adjustable %-open setpoint.

b. Damper shall include adjustable damper travel from 25% to 100% (full open).

c. Damper shall include single or dual blade, gear driven dampers and actuator motor.

d. Actuator shall be direct coupled to damper gear. No linkage arms or control rods shall be acceptable.

e. Damper will admit up to 100% outdoor air for applicable rooftop units.

f. Damper shall close upon indoor (evaporator) fan shutoff and/or loss of power.

g. The damper actuator shall plug into the rooftop unit's wiring harness plug. No hard wiring shall be required.

h. Outside air hood shall include aluminum water entrainment filter.

4. Manual damper (Field-installed only):

a. Manual damper package shall consist of damper, air inlet screen, and rain hood which can be preset to admit up to 25 or 50% outdoor air for year round ventilation.

5. Humidi-MiZer® Adaptive Dehumidification System (3 Phase Models Only):

a. The Humidi-MiZer Adaptive Dehumidification System shall be factory installed and shall provide greater dehumidification of the occupied space by two modes of dehumidification operations in addition to its normal design cooling mode:

1) Subcooling mode further sub cools the hot liquid refrigerant leaving the condenser coil when both temperature and humidity in the space are not satisfied.

2) Hot gas reheat mode shall mix a portion of the hot gas from the discharge of the compressor with the hot liquid refrigerant leaving the condenser coil to create a two-phase heat transfer in the system, resulting in a neutral leaving air temperature when only humidity in the space is not satisfied.

3) Includes low ambient controller.

6. Low Ambient Control Package:

a. Controller shall control coil head pressure by condenser fan speed modulation or condenser fan cycling and wind baffles.

b. Shall consist of solid-state control and condenser coil temperature sensor to maintain condensing temperature between 90°F (32°C) and 110°F (43°C) at outdoor ambient temperatures down to –20°F (–29°C).

7. Propane Conversion Kit:
   a. Package shall contain all the necessary hardware and instructions to convert a standard natural gas unit for use with liquefied propane, up to 2000 ft (610m) elevation.
   b. Additional accessory kits may be required for applications above 2000 ft (610m) elevation.
8. Flue Shield:
   a. Flue shield shall provide protection from the hot sides of the gas flue hood.
9. Condenser Coil Hail Guard Assembly (Factory-installed on 3 Phase Models Only. Field-installed on all 3 and 1 Phase Models.)
   a. Shall protect against damage from hail.
   b. Shall be either hood style or louvered.
10. Unit-Mounted, Non-Fused Disconnect Switch (Available on units with MOCPs of 80 amps or less):
   a. Switch shall be factory installed, internally mounted.
   b. National Electric Code (NEC) and UL approved non-fused switch shall provide unit power shutoff.
   c. Shall be accessible from outside the unit.
   d. Shall provide local shutdown and lockout capability.
   e. Sized only for the unit as ordered from the factory. Does not accommodate field-installed devices.
11. Convenience Outlet:
   a. Powered convenience outlet. (3 Phase Models Only)
      1) Outlet shall be powered from main line power to the rooftop unit.
      2) Outlet shall be powered from line side or load side of disconnect by installing contractor, as required by code. If outlet is powered from load side of disconnect, unit electrical ratings shall be UL certified and rated for additional outlet amperage.
      3) Outlet shall be factory-installed and internally mounted with easily accessible 115-v female receptacle.
      4) Outlet shall include 15 amp GFI receptacles with independent fuse protection.
      5) Voltage required to operate convenience outlet shall be provided by a factory installed step-down transformer.
      6) Outlet shall be accessible from outside the unit.
      7) Outlet shall include a field installed "Wet in Use" cover.
   b. Factory-Installed Non-Powered convenience outlet.
      1) Outlet shall be powered from a separate 115/120v power source.
      2) A transformer shall not be included.
      3) Outlet shall be factory-installed and internally mounted with easily accessible 115-v female receptacle.
      4) Outlet shall include 15 amp GFI receptacles with independent fuse protection.
      5) Outlet shall be accessible from outside the unit.
      6) Outlet shall include a field installed "Wet in Use" cover.
   c. Field-Installed Non-Powered convenience outlet.
      1) Outlet shall be powered from a separate 115/120v power source.
      2) A transformer shall not be included.
      3) Outlet shall be field-installed and internally mounted with easily accessible 115-v female receptacle.
      4) Outlet shall include 20 amp GFI receptacles. This kit provides a flexible installation method which allows code compliance for height requirements of the GFCI outlet from the finished roof surface as well as the capability to relocate the outlet to a more convenient location.
      5) Outlet shall be accessible from outside the unit.
      6) Outlet shall include a field installed "Wet in Use" cover.
12. Flue Discharge Deflector:
   a. Flue discharge deflector shall direct unit exhaust vertically instead of horizontally.
   b. Deflector shall be defined as a "natural draft" device by the National Fuel and Gas (NFG) code.
13. Thru-the-Base Connectors:
   a. Kits shall provide connectors to permit gas and electrical connections to be brought to the unit through the unit basepan.
   b. Minimum of four connection locations per unit.
14. Propeller Power Exhaust:
   a. Power exhaust shall be used in conjunction with an integrated economizer.
   b. Independent modules for vertical or horizontal return configurations shall be available.

c. Horizontal power exhaust is shall be mounted in return ductwork.

d. Power exhaust shall be controlled by economizer controller operation. Exhaust fans shall be energized when dampers open past the 0 to 100% adjustable setpoint on the economizer control.

15. Roof Curbs (Vertical):

a. Full perimeter roof curb with exhaust capability providing separate air streams for energy recovery from the exhaust air without supply air contamination.

b. Formed galvanized steel with wood nailer strip and shall be capable of supporting entire unit weight.

c. Permits installation and securing of ductwork to curb prior to mounting unit on the curb.

16. High Altitude Gas Conversion Kit:

a. Package shall contain all the necessary hardware and instructions to convert a standard natural gas unit to operate from 2000 to 7000 ft (610 to 2134 m) elevation with natural gas or from 0 to 7000 ft (0 to 2134 m) elevation with liquefied propane.

17. Outdoor Air Enthalpy Sensor:

a. The outdoor air enthalpy sensor shall be used to provide single enthalpy control. When used in conjunction with a return air enthalpy sensor, the unit will provide differential enthalpy control. The sensor allows the unit to determine if outside air is suitable for free cooling.

18. Return Air Enthalpy Sensor:

a. The return air enthalpy sensor shall be used in conjunction with an outdoor air enthalpy sensor to provide differential enthalpy control.

19. Indoor Air Quality (CO_2) Sensor:

a. Shall be able to provide demand ventilation indoor air quality (IAQ) control.

b. The IAQ sensor shall be available in duct mount, wall mount, or wall mount with LED display. The setpoint shall have adjustment capability.

20. Smoke detectors (factory-installed only):

a. Shall be a Four-Wire Controller and Detector.

b. Shall be environmental compensated with differential sensing for reliable, stable, and drift-free sensitivity.

c. Shall use magnet-activated test/reset sensor switches.

d. Shall have tool-less connection terminal access.

e. Shall have a recessed momentary switch for testing and resetting the detector.

f. Controller shall include:

1) One set of normally open alarm initiation contacts for connection to an initiating device circuit on a fire alarm control panel.

2) Two Form-C auxiliary alarm relays for interface with rooftop unit or other equipment.

3) One Form-C supervision (trouble) relay to control the operation of the Trouble LED on a remote test/reset station.

4) Capable of direct connection to two individual detector modules.

5) Can be wired to up to 14 other duct smoke detectors for multiple fan shutdown applications.

21. Winter Start Kit:

a. Shall contain a bypass device around the low pressure switch.

b. Shall be required when mechanical cooling is required down to 25°F (–4°C).

c. Shall not be required to operate on an economizer when below an outdoor ambient of 40°F (4°C).

22. Time Guard:

a. Shall prevent compressor short-cycling by providing a 5-minute delay (±2 minutes) before restarting a compressor after shutdown for any reason.

b. One device shall be required per compressor.

23. Hinged Access Panels:

a. Shall provide easy access through integrated quarter turn latches.

b. Shall be on major panels of: filter, control box, fan motor, and compressor.

24. Condensate overflow switch:

a. This sensor and related controller monitors the condensate level in the drain pan and shuts down compression operation when overflow conditions occur. It includes:

1) Indicator light — solid red (more than 10 seconds on water contact – compressors disabled), blinking red (sensor disconnected).

2) 10 second delay to break — eliminates nuisance trips from splashing or waves in pan (sensor needs 10 seconds of constant water contact before tripping).

3) Disables the compressor(s) operation when condensate plug is detected, but still allows fans to run for Economizer.

25. MERV-8 Return Air filters:

a. Factory option to upgrade standard unit filters to MERV-8 filters.

26. Phase Monitor Control:
    a. Shall monitor the sequence of three phase electrical system to provide a phase reversal protection.
    b. Shall monitor the three phase voltage inputs to provide a phase loss protection for the three phase device.
    c. Will work on either a Delta or Wye power connection.

27. Horn/Strobe Annunciator:
    a. Provides an audible/visual signaling device for use with factory-installed option or field installed accessory smoke detectors.
        1) Requires installation of a field-supplied 24-v transformer suitable for 4.2 VA (AC) or 3.0 VA (DC) per horn/strobe accessory.
        2) Requires field-supplied electrical box, North American 1-gang box, 2-in. (51 mm) x 4-in. (102 mm).
        3) Shall have a clear colored lens.

Note about this specification:
This specification is in the "Masterformat" as published by the Construction Specification Institute. Please feel free to copy this specification directly into your building spec.

Cooling Only/Electric Heat Packaged Rooftop

HVAC Guide Specifications

Size Range: **3 to 6 Nominal Tons**

Carrier Model Number: **50FC*04-07**

Part 1 — (23 06 80) Schedules for Decentralized HVAC Equipment

1.01 (23 06 80.13) Decentralized Unitary HVAC Equipment Schedule:

A. (23 06 80.13.A.) Rooftop unit (RTU) schedule:

1. Schedule is per the project specification requirements.

Part 2 — (23 07 16) HVAC equipment insulation

2.01 (23 07 16.13) Decentralized, Rooftop Units:

A. (23 07 16.13.A.) Evaporator fan compartment:

1. Interior cabinet surfaces shall be insulated with a minimum $^1/_2$-in. thick, minimum $1^1/_2$-lb density, flexible fiberglass insulation bonded with a phenolic binder, neoprene coated on the air side.
2. Insulation and adhesive shall meet NFPA 90A requirements for flame spread and smoke generation.

B. (23 07 16.13.B.) Electric Heat Compartment:

1. Aluminum foil-faced fiberglass insulation shall be used.
2. Insulation and adhesive shall meet NFPA 90A requirements for flame spread and smoke generation.

Part 3 — (23 09 13) Instrumentation and control devices for HVAC

3.01 (23 09 13.23) Sensors and Transmitters:

A. (23 09 13.23.A.) Thermostats:

1. Thermostat must
   a. energize both "W" and "G" when calling for heat.
   b. have capability to energize 1 or 2 stages of cooling, and 2 different stages of heating.
   c. include capability for occupancy scheduling.

Part 4 — (23 09 23) Direct Digital Control system for HVAC

4.01 (23 09 23.13) Decentralized, Rooftop Units:

A. (23 09 23.13.A.) SystemVu™ intelligent integrated Direct Digital Control (DDC) shall provide:

1. Integrated unit operation for comfort cooling, heating ventilation as well as all monitoring, recording and reporting capabilities. Controller shall also provide diagnostics and alarms of abnormal unit operation through the controller. Controller shall have an intuitive user display and be able to be used in a standalone operation or via building automation system (BAS).
2. Quick Unit Status LEDs of: Run – meaning all systems are go, ALERT – that indicates there is currently a non-critical issue with the unit, like filters need to be replaced and FAULT – that indicates the unit has a critical issue and will possibly shut down.
3. Six large navigation keys for easy access. Navigation keys shall consist of: TEST, BACK, ENTER, and MENU along with UP and DOWN arrows.
4. Full back lit user display with 4 line by 30 character text capabilities. Display menu shall be designed to provide guided major menus and sub menus main menus provided below:
   a. Shutdown Unit
   b. Run Status
   c. Settings
   d. Alerts/Faults
   e. Service
   f. Inputs
   g. Outputs
   h. USB
5. The capability for standalone operation with conventional thermostat/sensor or use with building automation systems (BAS) of Carrier i-Vu®, BACnet and Carrier Comfort Network® (CCN) systems. No special modules or boards are required for these capabilities. Has the capability to work with Equipment Touch™ and System Touch™ devices and ZS Sensors.
6. The ability to read refrigerant pressures at display or via BAS network of; Discharge Pressure and Suction Pressure. The need for traditional refrigerant gages is not required.
7. USB Data Port for flash drive interaction. This will allow the transfer of data for uploads, downloads, perform software upgrades, back-up and restore data and file transfer data such as component number of starts and run hours.
8. Reverse Rotation Protection of compressors if field three phase wiring is misapplied.
9. Provide Service Capabilities of:
   a. Auto run test
   b. Manual run test
   c. Component run hours and starts
   d. Commissioning reports
   e. Data logging
   f. Alarm history

10. Economizer control and diagnostics. Set up economizer operation, receive feedback from actuator. Also meets the most recent California Title 24, ASHRAE 90.1 and IECC Fault Detection and Diagnostic (FDD) requirements.
11. Unit cooling operation down to 40°F (4°C).
12. Controller shall have easy access connections around the controller perimeter area and consist of Mate-N-Lok, terminal block and RJ style modular jack connections.
13. 365 day real time clock, 20 holiday schedules along with occupied and unoccupied scheduling.
14. Auto-Recognition for easy installation and commissioning of devices like economizers, space sensors, etc.
15. A 5°F temperature difference between cooling and heating set points to meet the latest ASHRAE 90.1 Energy Standard.
16. Contain return air sensor, supply air sensor and outdoor air sensor to help monitor and provide data for the unit comfort operation, diagnostic and alarms.
17. Use of Carrier's field accessory hand-held Navigator™ display, Equipment Touch and System Touch devices.
18. Units with the factory-installed Humidi-MiZer® system option are capable of providing multiple modes of improved dehumidification as a variation of the normal cooling cycle.
19. Supply Air Tempering control operates the gas or electric heat to maintain a minimum supply air temperature during conditions where very cold outdoor air causes the supply air temperature to fall below the configured Supply Air Tempering Setpoint. This occurs during periods where DCV is active and increasing the amount of outdoor air or in cases where the system is operating at very low airflow and the calculated economizer position has increased to maintain a constant ventilation rate.
20. Demand limiting in SystemVu™ is achieved through set point expansion. The systems heating and cooling set points are expanded in steps or levels. The degree to which the set points may be expanded is defined by the 6 demand level offsets and the 2 commanded demand limit levels.
21. 3-year limited part warranty.

B. (23 09 23.13.B.) RTU Open Protocol, Direct Digital Controller:
1. Shall be ASHRAE 62 compliant.
2. Shall accept 18 - 30VAC, 50 - 60Hz, and consumer 15VA or less power.
3. Shall have an operating temperature range from –40°F (–40°C) to 130°F (54°C), 10% to 90% RH (non-condensing).
4. Shall include built-in protocol for BACnet[1] (MS/TP and PTP modes), Modbus[2] (RTU and ASCII), Johnson N2 and LonWorks[3]. LonWorks Echelon processor required for all Lon applications shall be contained in separate communication board.
5. Shall allow access of up to 62 network variables (SNVT). Shall be compatible with all open controllers.
6. Baud rate controller shall be selectable using a dipswitch.
7. Shall have an LED display independently showing the status of serial communication, running, errors, power, all digital outputs, and all analog inputs.
8. Shall accept the following inputs: space temperature, setpoint adjustment, outdoor air temperature, indoor air quality, outdoor air quality, compressor lock-out, fire shutdown, enthalpy switch, and fan status/filter status/humidity/remote occupancy.
9. Shall provide the following outputs: economizer, fan, cooling stage 1, cooling stage 2, heat stage 1, heat stage 2, exhaust, reversing valve/high fan speed.
10. Shall have built-in surge protection circuitry through solid-state polyswitches. Polyswitches shall be used on incoming power and network connections. Polyswitches will return to normal when the "trip" condition clears.
11. Shall have a battery back-up capable of a minimum of 10,000 hours of data and time clock retention during power outages.
12. Shall have built-in support for Carrier technician tool.
13. Shall include an RS-485 protocol communication port, an access port for connection of either a computer or a Carrier technician tool, an RS-485 port for network communication to intelligent space sensors and displays, and a port to connect an optional LonWorks communications card.
14. Software upgrades will be accomplished by either local or remote download. No software upgrades through chip replacements are allowed.

Part 5 — (23 09 33) Electric and Electronic Control System for HVAC

5.01 (23 09 33.13) Decentralized, Rooftop Units:

A. (23 09 33.13.A.) General:
1. Shall be complete with self-contained low-voltage control circuit protected by a resettable circuit breaker on the 24–v transformer side. Transformer shall have 75VA capability.

1. BACnet is a trademark of ASHRAE.
2. Modbus is a registered trademark of Schneider Electric.
3. LonWorks is a registered trademark of Echelon Corporation.

2. Shall utilize color-coded wiring.
3. Shall include a Unit Control Board to conveniently and safely provide connection points for vital control functions such as: smoke detectors, phase monitor, economizer, thermostat, DDC control options, and low and high pressure switches. Controller shall also provide an intuitive means to adjust the indoor fan speed through a simple switch and pot adjustment design.
4. Unit shall include a minimum of one 8-pin screw terminal connection board for connection of control wiring.

B. (23 09 33.13.B.) Safeties:
1. Compressor over-temperature, over-current. High internal pressure differential.
2. Low pressure switch.
   a. Low pressure switch shall use different color wire than the high pressure switch. The purpose is to assist the installer and service technician to correctly wire and or troubleshoot the rooftop unit.
3. High pressure switch.
   a. High pressure switch shall use different color wire than the low pressure switch. The purpose is to assist the installer and service technician to correctly wire and or troubleshoot the rooftop unit.
4. Automatic reset, motor thermal overload protector.

Part 6 — (23 09 93) Sequence of Operations for HVAC Controls

6.01 (23 09 93.13) Decentralized, Rooftop Units:

A. (23 09 93.13.A.) INSERT SEQUENCE OF OPERATION

Part 7 — (23 40 13) Panel Air Filters

7.01 (23 40 13.13) Decentralized, Rooftop Units:

A. (23 40 13.13.A.) Standard filter section:
1. Shall consist of factory installed, low velocity, disposable 2-in. thick fiberglass filters of commercially available sizes.
2. Unit shall use only one filter size. Multiple sizes are not acceptable.
3. Filters shall be accessible through an access panel with "no-tool" removal as described in the unit cabinet section of this specification (23 81 19.13.G).

Part 8 — (23 81 19) Self-Contained Air Conditioners

8.01 (23 81 19.13) Small-Capacity Self-Contained Air Conditioners:

A. (23 81 19.13.A.) General:
1. Outdoor, rooftop mounted, electrically controlled, heating and cooling unit utilizing a fully hermetic scroll compressor(s) for cooling duty and optional electric heat for heating duty.
2. Factory assembled, single-piece heating and cooling rooftop unit. Contained within the unit enclosure shall be all factory wiring, piping, controls, and special features required prior to field start-up.
3. Unit shall use Puron® (R-410A) refrigerant.
4. Unit shall be installed in accordance with the manufacturer's instructions.
5. Unit must be selected and installed in compliance with local, state, and federal codes.

B. (23 81 19.13.B.) Quality Assurance:
1. Unit meets ASHRAE 90.1 minimum efficiency requirements.
2. Unit shall be rated in accordance with AHRI Standards 210/240 (04-06 sizes) or 340/360 (07 size).
3. Unit shall be designed to conform to ASHRAE 15.
4. Unit shall be UL-tested and certified in accordance with ANSI Z21.47 Standards and UL-listed and certified under Canadian standards as a total package for safety requirements.
5. Insulation and adhesive shall meet NFPA 90A requirements for flame spread and smoke generation.
6. Unit casing shall be capable of withstanding 500 hour salt spray exposure per ASTM B117 (scribed specimen).
7. Unit shall be designed in accordance with ISO 9001, and shall be manufactured in a facility registered by ISO 9001:2015.
8. Roof curb shall be designed to conform to NRCA Standards.
9. Unit shall be subjected to a completely automated run test on the assembly line. The data for each unit will be stored at the factory, and must be available upon request.
10. Unit shall be designed in accordance with UL Standard 1995, including tested to withstand rain.
11. Unit shall be constructed to prevent intrusion of snow and tested to prevent snow intrusion into the control box up to 40 mph.
12. Unit shake tested to assurance level 1, ASTM D4169 to ensure shipping reliability.

C. (23 81 19.13.C.) Delivery, Storage, and Handling:
1. Unit shall be stored and handled per manufacturer's recommendations.
2. Lifted by crane requires either shipping top panel or spreader bars.
3. Unit shall only be stored or positioned in the upright position.

D. (23 81 19.13.D.) Project Conditions:
   1. As specified in the contract.

E. (23 81 19.13.E.) Operating Characteristics:
   1. Unit shall be capable of starting and running at 115°F (46°C) ambient outdoor temperature, meeting maximum load criteria of AHRI Standard 210/240 or 340/360 at ±10% voltage.
   2. Compressor with standard controls shall be capable of operation down to 40°F (4°C), ambient outdoor temperatures. Accessory winter start kit is necessary if mechanically cooling at ambient temperatures down to 25°F (–4°C).
   3. Unit shall discharge supply air vertically or horizontally as shown on contract drawings.
   4. Unit shall be factory configured for vertical supply and return configurations.
   5. Unit shall be field convertible from vertical to horizontal airflow on all models. No special kit required.
   6. Unit shall be capable of mixed operation: vertical supply with horizontal return or horizontal supply with vertical return.

F. (23 81 19.13.F.) Electrical Requirements:
   1. Main power supply voltage, phase, and frequency must match those required by the manufacturer.

G. (23 81 19.13.G.) Unit Cabinet:
   1. Unit cabinet shall be constructed of galvanized steel, and shall be bonderized and coated with a prepainted baked enamel finish on all externally exposed surfaces.
   2. Unit cabinet exterior paint shall be: film thickness, (dry) 0.003-in. minimum, gloss (per ASTM D523, 60°F/16°C): 60, Hardness: H-2H Pencil hardness.
   3. Evaporator fan compartment interior cabinet insulation shall conform to AHRI Standards 210/240 and or 340/360 minimum exterior sweat criteria. Interior surfaces shall be insulated with a minimum $^1/_2$-in. thick, 1 lb density, flexible fiberglass insulation, neoprene coated on the air side. Aluminum foil-faced fiberglass insulation shall be used in the heat compartment.
   4. Base of unit shall have a minimum of four locations for thru-the-base gas and electrical connections (factory-installed or field-installed), standard.
   5. Base Rail:
      a. Unit shall have base rails on a minimum of 2 sides.
      b. Holes shall be provided in the base rails for rigging shackles to facilitate maneuvering and overhead rigging.
      c. Holes shall be provided in the base rail for moving the rooftop by fork truck.
      d. Base rail shall be a minimum of 16 gage thickness.
   6. Condensate pan and connections:
      a. Shall be a sloped condensate drain pan made of a corrosion resistant material.
      b. Shall comply with ASHRAE Standard 62.
      c. Shall use a $^3/_4$-in. 14 NPT drain connection, possible either through the bottom or side of the drain pan. Connection shall be made per manufacturer's recommendations.
   7. Top panel:
      a. Shall be a single piece top panel on all sizes.
   8. Electrical Connections:
      a. All unit power wiring shall enter unit cabinet at a single, factory prepared, knockout location.
      b. Thru-the-base capability.
         1) Standard unit shall have a thru-the-base electrical location(s) using a raised, embossed portion of the unit basepan.
         2) Optional, factory approved, water-tight connection method must be used for thru-the-base electrical connections.
         3) No basepan penetration, other than those authorized by the manufacturer, is permitted.
   9. Component access panels (standard):
      a. Cabinet panels shall be easily removable for servicing.
      b. Unit shall have one factory installed, toolless, removable, filter access panel.
      c. Panels covering control box, indoor fan, indoor fan motor, gas components (where applicable), and compressors shall have molded composite handles.
      d. Handles shall be UV modified, composite. They shall be permanently attached, and recessed into the panel.
      e. Screws on the vertical portion of all removable access panel shall engage into heat resistant, molded composite collars.
      f. Collars shall be removable and easily replaceable using manufacturer recommended parts.

H. (23 81 19.13.H.) Coils:
   1. Standard Aluminum Fin-Copper Tube Coils:
      a. Standard evaporator and condenser coils shall have aluminum lanced plate fins mechanically bonded to seamless internally grooved copper tubes with all joints brazed.
      b. Evaporator coils shall be leak tested to 150 psig, pressure tested to 450 psig, and qualified to UL 1995 burst test at 1775 psig.

c. Condenser coils shall be leak tested to 150 psig, pressure tested to 650 psig, and qualified to UL 1995 burst test at 1980 psig.

2. Optional Pre-coated aluminum-fin condenser coils (3 Phase Models Only):
   a. Shall have a durable epoxy-phenolic coating to provide protection in mildly corrosive coastal environments.
   b. Coating shall be applied to the aluminum fin stock prior to the fin stamping process to create an inert barrier between the aluminum fin and copper tube.
   c. Epoxy-phenolic barrier shall minimize galvanic action between dissimilar metals.
   d. Corrosion durability of fin stock shall be confirmed through testing to be no less than 1000 hours salt spray per ASTM B117-90.
   e. Corrosion durability of fin stock shall be confirmed through testing to have no visible corrosion after 48 hour immersion in a room temperature solution of 5% salt, 1% acetic acid.
   f. Fin stock coating shall pass 2000 hours of the following: one week exposure in the prohesion chamber followed by one week of accelerated ultraviolet light testing. Prohesion chamber: the solution shall contain 3.5% sodium chloride and 0.35% ammonium sulfate. The exposure cycle is one hour of salt fog application at ambient followed by one hour drying at 95°F (35°C).
3. Optional Copper-fin evaporator and condenser coils (3 Phase Models Only):
   a. Shall be constructed of copper fins mechanically bonded to copper tubes and copper tube sheets.
   b. Galvanized steel tube sheets shall not be acceptable.
   c. A polymer strip shall prevent coil assembly from contacting the sheet metal coil pan to minimize potential for galvanic corrosion between coil and pan.
4. Optional E-coated aluminum-fin evaporator and condenser coils (3 Phase Models Only):
   a. Shall have a flexible epoxy polymer coating uniformly applied to all coil surface areas without material bridging between fins.
   b. Coating process shall ensure complete coil encapsulation of tubes, fins and headers.
   c. Color shall be high gloss black with gloss per ASTM D523-89.
   d. Uniform dry film thickness from 0.8 to 1.2 mil on all surface areas including fin edges.
   e. Superior hardness characteristics of 2H per ASTM D3363-92A and cross-hatch adhesion of 4B-5B per ASTM D3359-93.
   f. Impact resistance shall be up to 160 in.-lb (ASTM D2794-93).
   g. Humidity and water immersion resistance shall be up to minimum 1000 and 250 hours respectively (ASTM D2247-92 and ASTM D870-92).
   h. Corrosion durability shall be confirmed through testing to be no less than 1000 hours salt spray per ASTM B117-90.

I. (23 81 19.13.I.) Refrigerant Components:
1. Refrigerant circuit shall include the following control, safety, and maintenance features:
   a. Fixed orifice metering system on 04-06 models and TXV on 07 size models shall include a multiple feed distribution system that optimizes coil performance.
   b. Refrigerant filter drier - Solid core design.
   c. Service gage connections on suction and discharge lines.
   d. Pressure gage access through a specially designed access port in the top panel of the unit.
2. There shall be gage line access port in the skin of the rooftop, covered by a black, removable plug.
   a. The plug shall be easy to remove and replace.
   b. When the plug is removed, the gage access port shall enable maintenance personnel to route their pressure gage lines.
   c. This gage access port shall facilitate correct and accurate condenser pressure readings by enabling the reading with the compressor access panel on.
   d. The plug shall be made of a leak proof, UV-resistant, composite material.
3. Compressors:
   a. Unit shall use fully hermetic, scroll compressor for each independent refrigeration circuit.
   b. Compressor motors shall be cooled by refrigerant gas passing through motor windings.
   c. Compressors shall be internally protected from high discharge temperature conditions.
   d. Compressors shall be protected from an over-temperature and over-amperage conditions by an internal, motor overload device.
   e. Compressor shall be factory mounted on rubber grommets.
   f. Compressor motors shall have internal line break thermal, current overload and high pressure differential protection.
   g. Crankcase heaters shall not be required for normal operating range, unless required by compressor manufacturer due to refrigerant charge limits.

h. Compressor on 04-06 models shall be of a single stage cooling capacity design and 07 models shall be a two stage cooling capacity design.

J. (23 81 19.13.J.) Filter Section:

1. Filters access is specified in the unit cabinet section of this specification.
2. Filters shall be held in place by a pivoting filter tray, facilitating easy removal and installation.
3. Shall consist of factory installed, low velocity, throw-away 2-in. thick fiberglass filters.
4. Filters shall be standard, commercially available sizes.
5. Only one size filter per unit is allowed.

K. (23 81 19.13.K.) Evaporator Fan and Motor with EcoBlue™ Technology:

1. Direct Drive Evaporator fan motor:
   a. Shall be a ECM motor design.
   b. Shall have permanently lubricated bearings.
   c. Shall have inherent automatic-reset thermal overload protection.
   d. Shall have slow ramp up to speed capabilities.
   e. Shall require no fan/motor belts for operation, adjustments and or initial fan speed set up.
   f. Fan DC voltage set up on Unit Control Board can eliminate the need of removal of blower access door, required on conventional belt drive systems.
   g. Shall be internally protected from electrical phase reversal and loss.
2. Evaporator Fan:
   a. Shall be easily set with dedicated selection switch and adjustment pot on unit control board or through SystemVu™ controller.
   b. On sizes 04-06 single speed indoor fan operation provided and on 07 size model with two stage cooling capacity control, the indoor fan speed is automatically controlled to meet the code-compliant 66% low fan speed and 100% at full fan speed operation.
   c. Blower fan shall be a Vane Axial fan design with 75% less moving parts than a conventional belt drive system.
   d. Shall be constructed of a cast aluminum stator and high impact composite material on rotor and air inlet casing.
   e. Shall be a patented / pending design with a corrosion resistant material and dynamically balanced.
   f. Shall have slow ramp up to speed capabilities to help reduce sound and comfort issues typically associated with single speed belt drive systems.
   g. Shall be a slide out design with two screw removal.
3. Shall include an easily accessible unit Control Board to conveniently and safely provide connection points for vital control functions such as: smoke detectors, phase monitor, gas controller, economizer, thermostat, DDC control options, and low and high pressure switches. Controller shall also provide an intuitive means to adjust the indoor fan speed through a simple switch and pot adjustment design.

L. (23 81 19.13.L.) Condenser Fans and Motors:

1. Condenser fan motors:
   a. Shall be a totally enclosed motor.
   b. Shall use permanently lubricated bearings.
   c. Shall have inherent thermal overload protection with an automatic reset feature.
   d. Shall use a shaft-down design on all sizes.
2. Condenser Fans:
   a. Shall be a direct-driven propeller type fan constructed of high impact composite material.
   b. Shall have high impact composite blades completely formed into one piece without blade fasteners or connectors and shall be dynamically balanced.

M. (23 81 19.13.M.) Special Features Options and Accessories:

1. Integrated EconoMi$er® IV, EconoMi$er2, and EconoMi$er X low leak rate models. (EconoMi$er 2, IV and X are factory-installed on 04-06 models. EconoMi$er 2 and X are factory-installed on 07 models. All are field-installed on all 3 and 1 phase models.)
   a. Integrated, gear driven opposing modulating blade design type capable of simultaneous economizer and compressor operation.
   b. Independent modules for vertical or horizontal return configuration shall be available. Vertical return modules shall be available as a factory installed option.
   c. Damper blades shall be galvanized steel with composite gears. Plastic or composite blades on intake or return shall not be acceptable.
   d. Shall include all hardware and controls to provide free cooling with outdoor air when temperature and/or humidity are below setpoints.
   e. Shall be equipped with gear driven dampers for both the outdoor ventilation air and the return air for positive air stream control.
   f. Standard leak rate shall be equipped with dampers not to exceed 2% leakage at 1 in. wg pressure differential.

g. Economizer controller on EconoMi$er IV models shall be Honeywell W7212 that provides:
   1) Combined minimum and DCV maximum damper position potentiometers with compressor staging relay.
   2) Functions with solid-state analog enthalpy or dry bulb changeover control sensing.
   3) Contain LED indicates for: when free cooling is available, when module is in DCV mode, when exhaust fan contact is closed.

h. Economizer controller on EconoMi$er X models shall be the Honeywell W7220 that provides:
   1) 2-line LCD interface screen for setup, configuration and troubleshooting.
   2) On-board Fault Detection and Diagnostics (FDD) that senses and alerts when the economizer is not operating properly, per California Title 24, ASHRAE 90.1 and IECC[1].
   3) Sensor failure loss of communication identification.
   4) Automatic sensor detection.
   5) Capabilities for use with multiple-speed or single speed indoor fan systems.
   6) Utilize digital sensors: Dry bulb and Enthalpy.

i. Economizer controller on EconoMi$er 2 models with RTU Open or SystemVu™ controls shall be a 4 to 20mA design controlled directly by the controller. RTU Open and SystemVu meet California Title 24, ASHRAE 90.1 and IECC Fault Detection and Diagnostic (FDD) requirements.

j. Shall be capable of introducing up to 100% outdoor air.

k. Shall be equipped with a barometric relief damper capable of relieving up to 100% return air and contain seals that meet ASHRAE 90.1 requirements.

l. Shall be designed to close damper(s) during loss-of-power situations with spring return built into motor.

m. Dry bulb outdoor air temperature sensor shall be provided as standard. Enthalpy sensor is also available on factory installed only. Outdoor air sensor setpoint shall be adjustable and shall range from 40°F to 100°F (4°C to 38°C). Additional sensor options shall be available as accessories.

n. The economizer controller shall also provide control of an accessory power exhaust unit function. Factory set at 100%, with a range of 0% to 100%.

o. The economizer shall maintain minimum airflow into the building during occupied period and provide design ventilation rate for full occupancy.

p. Dampers shall be completely closed when the unit is in the unoccupied mode.

q. Economizer controller shall accept a 2 to 10 vdc CO_2 sensor input for IAQ/DCV control. In this mode, dampers shall modulate the outdoor air damper to provide ventilation based on the sensor input.

r. Compressor lockout temperature on W7220 control is adjustable from –45°F to 80°F, set at a factory default of 32°F. W7212 control opens at 35°F (2°C) and closes at 50°F (10°C).

s. Actuator shall be direct coupled to economizer gear. No linkage arms or control rods shall be acceptable.

t. Economizer controller shall provide indications when in free cooling mode, in the DCV mode, or the exhaust fan contact is closed.

2. Integrated EconoMi$er®2, and EconoMi$er X Ultra Low Leak rate models. (Factory-installed on 3 phase models only. Field-installed on all 3 and 1 phase models.)
   a. Integrated, gear driven opposing modulating blade design type capable of simultaneous economizer and compressor operation.
   b. Independent modules for vertical or horizontal return configuration shall be available. Vertical return modules shall be available as a factory-installed option.
   c. Damper blades shall be galvanized steel with composite gears. Plastic or composite blades on intake or return shall not be acceptable.
   d. Shall include all hardware and controls to provide free cooling with outdoor air when temperature and/or humidity are below setpoints.
   e. Shall be equipped with gear driven dampers for both the outdoor ventilation air and the return air for positive air stream control.
   f. Ultra Low Leak design meets California Title 24 section 140.4 and ASHRAE 90.1 requirements for 4 cfm per sq.ft. on the outside air dampers and 10 cfm per sq. ft. on the return dampers.
   g. Economizer controller on EconoMi$er X models shall be the Honeywell W7220 that provides:
      1) 2-line LCD interface screen for setup, configuration and troubleshooting.

1. IECC is a registered trademark of the International Code Council, Inc.

2) On-board Fault Detection and Diagnostics (FDD) that senses and alerts when the economizer is not operating properly, per California Title 24, ASHRAE 90.1 and IECC.
3) Sensor failure loss of communication identification.
4) Automatic sensor detection.
5) Capabilities for use with multiple-speed indoor fan systems.
6) Utilize digital sensors: Dry bulb and Enthalpy.

h. Economizer controller on EconoMi$er 2 models with RTU Open or SystemVu™ controls shall be a 4-20mA design controlled directly by the controller. RTU Open and SystemVu meet California Title 24, ASHRAE 90.1 and IECC Fault Detection and Diagnostic (FDD) requirements.
i. Shall be capable of introducing up to 100% outdoor air.
j. Shall be equipped with a barometric relief damper capable of relieving up to 100% return air and contain seals that meet ASHRAE 90.1 requirements.
k. Shall be designed to close damper(s) during loss-of-power situations with spring return built into motor.
l. Dry bulb outdoor air temperature sensor shall be provided as standard. Enthalpy sensor is also available on factory installed only. Outdoor air sensor setpoint shall be adjustable and shall range from 40°F to 100°F (4°C to 38°C). Additional sensor options shall be available as accessories.
m. The economizer controller shall also provide control of an accessory power exhaust unit function. Factory set at 100%, with a range of 0% to 100%.
n. The economizer shall maintain minimum airflow into the building during occupied period and provide design ventilation rate for full occupancy.
o. Dampers shall be completely closed when the unit is in the unoccupied mode.
p. Economizer controller shall accept a 2 to 10 vdc CO_2 sensor input for IAQ/DCV control. In this mode, dampers shall modulate the outdoor air damper to provide ventilation based on the sensor input.
q. Compressor lockout temperature on W7220 control is adjustable from –45°F to 80°F, set at a factory default of 32°F. W7212 control opens at 35°F (2°C) and closes at 50°F (10°C).
r. Actuator shall be direct coupled to economizer gear. No linkage arms or control rods shall be acceptable.
s. Economizer controller shall provide indications when in free cooling mode, in the DCV mode, or the exhaust fan contact is closed.

3. Two-Position Damper (Factory-installed on 3 Phase 04-06 Models Only. Field-installed on all 3 and 1 Phase Models)
   a. Damper shall be a Two-Position Damper. Damper travel shall be from the full closed position to the field adjustable %-open setpoint.
   b. Damper shall include adjustable damper travel from 25% to 100% (full open).
   c. Damper shall include single or dual blade, gear driven dampers and actuator motor.
   d. Actuator shall be direct coupled to damper gear. No linkage arms or control rods shall be acceptable.
   e. Damper will admit up to 100% outdoor air for applicable rooftop units.
   f. Damper shall close upon indoor (evaporator) fan shutoff and/or loss of power.
   g. The damper actuator shall plug into the rooftop unit's wiring harness plug. No hard wiring shall be required.
   h. Outside air hood shall include aluminum water entrainment filter.
4. Manual damper (field-installed only):
   a. Manual damper package shall consist of damper, air inlet screen, and rain hood which can be preset to admit up to 25% or 50% outdoor air for year round ventilation.
5. Humidi-MiZer Adaptive Dehumidification System (3 Phase Models Only):
   a. The Humidi-MiZer® Adaptive Dehumidification System shall be factory installed and shall provide greater dehumidification of the occupied space by two modes of dehumidification operations in addition to its normal design cooling mode:
      1) Subcooling mode further sub cools the hot liquid refrigerant leaving the condenser coil when both temperature and humidity in the space are not satisfied.
      2) Hot gas reheat mode shall mix a portion of the hot gas from the discharge of the compressor with the hot liquid refrigerant leaving the condenser coil to create a two-phase heat transfer in the system, resulting in a neutral leaving air temperature when only humidity in the space is not satisfied.
      3) Includes low ambient controller.

6. Low Ambient Control Package:
   a. Controller shall control coil head pressure by condenser fan speed modulation or condenser fan cycling and wind baffles.
   b. Shall consist of solid-state control and condenser coil temperature sensor to maintain condensing temperature between 90°F (32°C) and 110°F (43°C) at outdoor ambient temperatures down to –20°F (–29°C).
7. Condenser Coil Hail Guard Assembly (Factory-installed on 3 Phase Models Only. Field-installed on all 3 and 1 Phase Models.)
   a. Shall protect against damage from hail.
   b. Shall be either hood style or louvered.
8. Unit-Mounted, Non-Fused Disconnect Switch (Available on units with MOCPs of 80 amps or less):
   a. Switch shall be factory installed, internally mounted.
   b. National Electric Code (NEC) and UL approved non-fused switch shall provide unit power shutoff.
   c. Shall be accessible from outside the unit.
   d. Shall provide local shutdown and lockout capability.
   e. Sized only for the unit as ordered from the factory. Does not accommodate field-installed devices.
9. Convenience Outlet:
   a. Powered convenience outlet. (3 Phase Models Only)
      1) Outlet shall be powered from main line power to the rooftop unit.
      2) Outlet shall be powered from line side or load side of disconnect by installing contractor, as required by code. If outlet is powered from load side of disconnect, unit electrical ratings shall be UL certified and rated for additional outlet amperage.
      3) Outlet shall be factory-installed and internally mounted with easily accessible 115-v female receptacle.
      4) Outlet shall include 15 amp GFI receptacles with independent fuse protection.
      5) Voltage required to operate convenience outlet shall be provided by a factory installed step-down transformer.
      6) Outlet shall be accessible from outside the unit.
      7) Outlet shall include a field installed "Wet in Use" cover.
   b. Factory-Installed Non-Powered convenience outlet.
      1) Outlet shall be powered from a separate 115/120v power source.
      2) A transformer shall not be included.
      3) Outlet shall be factory-installed and internally mounted with easily accessible 115-v female receptacle.
      4) Outlet shall include 15 amp GFI receptacles with independent fuse protection.
      5) Outlet shall be accessible from outside the unit.
      6) Outlet shall include a field installed "Wet in Use" cover.
   c. Field-Installed Non-Powered convenience outlet.
      1) Outlet shall be powered from a separate 115/120v power source.
      2) A transformer shall not be included.
      3) Outlet shall be field-installed and internally mounted with easily accessible 115-v female receptacle.
      4) Outlet shall include 20 amp GFI receptacles. This kit provides a flexible installation method which allows code compliance for height requirements of the GFCI outlet from the finished roof surface as well as the capability to relocate the outlet to a more convenient location.
      5) Outlet shall be accessible from outside the unit.
      6) Outlet shall include a field installed "Wet in Use" cover.
10. Thru-the-Base Connectors:
    a. Kits shall provide connectors to permit gas and electrical connections to be brought to the unit through the unit basepan.
    b. Minimum of four connection locations per unit.
11. Propeller Power Exhaust:
    a. Power exhaust shall be used in conjunction with an integrated economizer.
    b. Independent modules for vertical or horizontal return configurations shall be available.
    c. Horizontal power exhaust is shall be mounted in return ductwork.
    d. Power exhaust shall be controlled by economizer controller operation. Exhaust fans shall be energized when dampers open past the 0 to 100% adjustable setpoint on the economizer control.
12. Roof Curbs (Vertical):
    a. Full perimeter roof curb with exhaust capability providing separate air streams for energy recovery from the exhaust air without supply air contamination.

b. Formed galvanized steel with wood nailer strip and shall be capable of supporting entire unit weight.

c. Permits installation and securing of ductwork to curb prior to mounting unit on the curb.

13. Outdoor Air Enthalpy Sensor:

a. The outdoor air enthalpy sensor shall be used to provide single enthalpy control. When used in conjunction with a return air enthalpy sensor, the unit will provide differential enthalpy control. The sensor allows the unit to determine if outside air is suitable for free cooling.

14. Return Air Enthalpy Sensor:

a. The return air enthalpy sensor shall be used in conjunction with an outdoor air enthalpy sensor to provide differential enthalpy control.

15. Indoor Air Quality (CO_2) Sensor:

a. Shall be able to provide demand ventilation indoor air quality (IAQ) control.

b. The IAQ sensor shall be available in duct mount, wall mount, or wall mount with LED display. The setpoint shall have adjustment capability.

16. Smoke detectors (factory-installed only):

a. Shall be a four-wire controller and detector.

b. Shall be environmental compensated with differential sensing for reliable, stable, and drift-free sensitivity.

c. Shall use magnet-activated test/reset sensor switches.

d. Shall have tool-less connection terminal access.

e. Shall have a recessed momentary switch for testing and resetting the detector.

f. Controller shall include:

1) One set of normally open alarm initiation contacts for connection to an initiating device circuit on a fire alarm control panel.

2) Two Form-C auxiliary alarm relays for interface with rooftop unit or other equipment.

3) One Form-C supervision (trouble) relay to control the operation of the Trouble LED on a remote test/reset station.

4) Capable of direct connection to two individual detector modules.

5) Can be wired to up to 14 other duct smoke detectors for multiple fan shutdown applications.

17. Winter Start Kit:

a. Shall contain a bypass device around the low pressure switch.

b. Shall be required when mechanical cooling is required down to 25°F (–4°C).

c. Shall not be required to operate on an economizer when below an outdoor ambient of 40°F (4°C).

18. Time Guard:

a. Shall prevent compressor short-cycling by providing a 5 minute delay (±2 minutes) before restarting a compressor after shutdown for any reason.

b. One device shall be required per compressor.

19. Hinged Access Panels:

a. Shall provide easy access through integrated quarter turn latches.

b. Shall be on major panels of: filter, control box, fan motor, and compressor.

20. Condensate overflow switch:

a. This sensor and related controller monitors the condensate level in the drain pan and shuts down compression operation when overflow conditions occur. It includes:

1) Indicator light — solid red (more than 10 seconds on water contact – compressors disabled), blinking red (sensor disconnected).

2) 10 second delay to break — eliminates nuisance trips from splashing or waves in pan (sensor needs 10 seconds of constant water contact before tripping).

3) Disables the compressor(s) operation when condensate plug is detected, but still allows fans to run for Economizer.

21. MERV-8 Return Air filters:

a. Factory option to upgrade standard unit filters to MERV-8 filters.

22. Phase Monitor Control:

a. Shall monitor the sequence of three phase electrical system to provide a phase reversal protection.

b. Shall monitor the three phase voltage inputs to provide a phase loss protection for the three phase device.

c. Will work on either a Delta or Wye power connection.

23. Horn/Strobe Annunciator:

a. Provides an audible/visual signaling device for use with factory-installed option or field installed accessory smoke detectors.

1) Requires installation of a field-supplied 24-v transformer suitable for 4.2 VA (AC) or 3.0 VA (DC) per horn/strobe accessory.

2) Requires field-supplied electrical box, North American 1-gang box, 2-in. (51 mm) x 4-in. (102 mm).

3) Shall have a clear colored lens.

24. Electric Heat:

a. Heating Section:

1) Heater element open coil resistance wire, nickel-chrome alloy, 0.29 inches inside diameter, strung through ceramic insulators mounted on metal frame. Coil ends are staked and welded to terminal screw slots.

2) Heater assemblies are provided with integral fusing for protection of internal heater circuits not exceeding 48 amps each. Auto reset thermo limit controls, magnetic heater contactors (24 v coil) and terminal block all mounted in electric heater control box (minimum 18 ga galvanized steel) attached to end of heater assembly.

Manufacturer reserves the right to discontinue, or change at any time, specifications or designs without notice and without incurring obligations.