Carrier

Aquazone™ 50PCH, PCV 007-070 Compact Water Source Heat Pumps with Puron® Refrigerant (R-410A)

Installation, Start-Up, and Service Instructions

CONTENTS

Page

SAFETY CONSIDERATIONS 2
GENERAL 2
PRE-INSTALLATION 2
- INSPECTION
- STORAGE

INSTALLATION 2
Step 1 — Check Jobsite 2
- HORIZONTAL UNITS (50PCH)
- VERTICAL UNITS (50PCV)
- INSTALLATION GUIDELINES (ALL UNITS)

Step 2 — Check Unit 3
- INSPECT UNIT

Step 3 — Locate Unit 8
- PROTECTION

Step 4 — Mount the Unit 8
- DUCT FLANGES
- HORIZONTAL UNITS (50PCH)
- VERTICAL UNITS (50PCV)

Step 5 — Check Duct System 9
- HORIZONTAL SUPPLY AIR CONFIGURATION CONVERSION

Step 6 — Install Condensate Drain 10
Step 7 — Pipe Connections 10
- WATER LOOP APPLICATIONS
- GROUND LOOP APPLICATIONS
- INSTALLING SUPPLY AND RETURN HOSE KIT
- UNITS WITH WATERSIDE ECONOMIZER OR BOILERLESS HEAT CONTROL
- AQUASTAT BULB INSTALLATION

Step 8 — Wire Field Power Supply 11
- HIGH VOLTAGE
- OVERLOAD SETTING VERIFICATION

Step 9 — Wire Control Connections 35
- BETTER B, COMPLETE C, AND DELUXE D CONTROL
- ECM INTERFACE THERMOSTAT CONNECTIONS
- THERMOSTAT AND DDC SENSORS
- HOT GAS REHEAT CONTROL
- AUXILIARY RELAY (DELUXE D ONLY)
- ENERGY MANAGEMENT SWITCH (DELUXE D ONLY)
- BOILERLESS HEAT CONTROL (DELUXE D ONLY)
- ALARM OUTPUT (ALL UNITS)
- WSHP OPEN CONTROL
- CONTROL TRANSFORMER

Step 10 — Configure Unit Control Components . . 37
- UNIT PROTECTION MODULE (UPM)
- WATERSIDE ECONOMIZER
- BOILERLESS HEAT CONTROL (DELUXE D ONLY)

PRE-START-UP 38
System Checkout 38
- CLEAN AIR COIL

Set Blower Motor Speed 39
- PERMANENT SPLIT CAPACITOR (PSC) MOTOR
- CONSTANT TORQUE (ECM) MOTOR
- CONSTANT AIRFLOW (ECM) MOTOR

System Flushing and Filling 44
System Flow 44
- FLOW VERIFICATION
- FLOW REGULATION
- ANTIFREEZE
- FREEZE PROTECTION SELECTION

START-UP 45
Operating Limits 45
- ENVIRONMENT
- POWER SUPPLY
- UNIT STARTING CONDITIONS

Start-Up Procedure 45
- SCROLL COMPRESSOR ROTATION
- COOLING MODE START-UP
- HEATING MODE START-UP

OPERATION 54
Power Up Mode 54
Unit Protection Module (UPM) 54
Units with Better B, Complete C, or Deluxe D Controls 54
- STANDBY
- COOLING
- HOT GAS REHEAT (OPTIONAL FOR COMPLETE C OR DELUXE D CONTROLS)
- WATERSIDE ECONOMIZER (OPTIONAL FOR COMPLETE C OR DELUXE D CONTROLS)
- TWO WAY WATER FLOW CONTROL VALVE (OPTIONAL)
- BOILERLESS HEAT (DELUXE D ONLY)
- PUMP/VALVE RELAY (DELUXE D ONLY)

Units with WSHP Open Controls 54
- COOLING
- REVERSE CYCLE HEATING
- TWO POSITION OA DAMPER
- MODULATING OA DAMPER WITH DCV
- AUXILIARY MODULATING HOT WATER / STEAM HEATING REHEAT
- 2-POSITION HOT WATER / STEAM HEATING REHEAT
- SINGLE STAGE ELECTRIC AUXILIARY HEAT
- AUTOMATIC FAN SPEED CONTROL
- FAN SPEED CONTROL - DURING HEATING
- FAN SPEED CONTROL - DURING COOLING
- MODULATING WATER ECONOMIZER CONTROL
- 2-POSITION WATER ECONOMIZER CONTROL

Manufacturer reserves the right to discontinue, or change at any time, specifications or designs without notice and without incurring obligations.

- POWER FAIL RESTART DELAY
- SUPPLY AIR TEMPERATURE MONITORING / CONTROL / ALARM
- DEHUMIDIFICATION
- SPACE TEMPERATURE ALARMS
- CONDENSER WATER TEMPERATURE MONITORING / CONTROL / ALARM
- HIGH CONDENSATE / OVERFLOW ALARM
- FILTER STATUS ALARM
- COMPRESSOR FAULT/LOCKOUT ALARM
- INSUFFICIENT VENTILATION ALARM
- RELATIVE HUMIDITY ALARM
- TIME SCHEDULES
- HOLIDAY SCHEDULES
- OVERRIDE SCHEDULES

SERVICE 58
Filters 59
Condensate Drain Pans 59
Refrigerant System 59
Compressor 59
Fan Motors 59
Condensate Drain Cleaning 59
Air Coil Cleaning 59
Condenser Cleaning 59
- GRAVITY FLOW METHOD
- FORCED CIRCULATION METHOD

Checking System Charge 60
Refrigerant Charging 60
Air Coil Fan Motor Removal 60
TROUBLESHOOTING 60
- UNIT PROTECTION MODULE (UPM)

Freeze Protection Sensors 62
Thermostatic Expansion Valves 62
- TXV FAILURE

START-UP CHECKLIST CL-1

IMPORTANT: Read the entire instruction manual before starting installation.

SAFETY CONSIDERATIONS

Installation and servicing of air-conditioning equipment can be hazardous due to system pressure and electrical components. Only trained and qualified service personnel should install, repair, or service air-conditioning equipment.

Untrained personnel can perform basic maintenance functions of cleaning coils and filters and replacing filters. All other operations should be performed by trained service personnel. When working on air-conditioning equipment, observe precautions in the literature, tags and labels attached to the unit, and other safety precautions that may apply.

Improper installation, adjustment, alteration, service, maintenance, or use can cause explosion, fire, electrical shock or other conditions which may cause personal injury or property damage. Consult a qualified installer, service agency, or your distributor or branch for information or assistance. The qualified installer or agency must use factory-authorized kits or accessories when servicing or repairing this product. Refer to the individual instructions packaged with the kits or accessories when installing.

Follow all safety codes. Wear safety glasses and work gloves. Use quenching cloth for brazing operations. Have fire extinguisher available. Read these instructions thoroughly and follow all warnings or cautions attached to the unit. Consult local building codes and the National Electrical Code (NEC) for special installation requirements.

Understand the signal words — DANGER, WARNING, and CAUTION. DANGER identifies the most serious hazards which will result in severe personal injury or death. WARNING signifies hazards that could result in personal injury or death. CAUTION is used to identify unsafe practices, which would result in minor personal injury or product and property damage.

It is important to recognize safety information. This is the safety-alert symbol (⚠). When you see this symbol on the unit and in instructions or manuals, be alert to the potential for personal injury.

⚠ WARNING

Electrical shock can cause personal injury and death. Shut off all power to this equipment during installation. There may be more than one disconnect switch. Tag all disconnect locations to alert others not to restore power until work is completed.

GENERAL

This Installation and Start-Up Instructions literature is for Aquazone™ water source heat pump systems.

Water source heat pumps (WSHPs) are single-package horizontally and vertically mounted units with electronic controls designed for year-round cooling and heating.

IMPORTANT: The installation of water source heat pump units and all associated components, parts, and accessories which make up the installation shall be in accordance with the regulations of ALL authorities having jurisdiction and MUST conform to all applicable codes. It is the responsibility of the installing contractor to determine and comply with ALL applicable codes and regulations.

PRE-INSTALLATION

INSPECTION

Upon receipt of shipment, carefully check the shipment against the bill of lading. Make sure all units have been received. Inspect the carton or crating of each unit, and inspect each unit for damage on both the interior and exterior. Ensure the shipping company makes proper notation of any shortages or damage on all copies of the freight bill.

Concealed damage not discovered during unloading must be reported to the shipping company within 5 days of receipt of shipment.

NOTE: It is the responsibility of the purchaser to file all necessary claims with the shipping company.

STORAGE

If the equipment is not needed for immediate installation upon its arrival at the job site, it should be left in its shipping carton and stored in a clean, dry area between 50°F and 95°F. Units must only be stored or moved in the normal upright position as indicated by the UP arrows on each carton at all times. If unit stacking is required, stack units as follows: vertical units less than 6 tons, no more than two high; horizontal units less than 6 tons, no more than three high. Do not stack units larger than 6 tons.

INSTALLATION

Step 1 — Check Jobsite

Installation, operation and maintenance instructions are provided with each unit. Before unit start-up, read all manuals and become familiar with the unit and its operation. Thoroughly check out the system before operation. Complete the inspec-

tions and instructions listed below to prepare a unit for installation. See Tables 1 and 2 for unit physical data.

HORIZONTAL UNITS (50PCH)

Horizontal units are designed for indoor installation only. Be sure to allow adequate space around the unit for installation and servicing. See Fig. 1 for overall unit dimensions.

VERTICAL UNITS (50PCV)

Vertical units are designed for indoor installations only. Vertical units are typically installed in a floor-level closet or a small mechanical room, Be sure to allow adequate space around the unit for installation and servicing. See Fig. 2 for overall unit dimensions.

⚠ CAUTION

EQUIPMENT DAMAGE HAZARD

To avoid equipment damage, do not use these units as a source of heating or cooling during the construction process. The mechanical components and filters used in these units quickly become clogged with construction dirt and debris which may cause system damage.

INSTALLATION GUIDELINES (ALL UNITS)

1. Be sure that the location chosen for unit installation provides ambient temperatures maintained above freezing.
2. Be sure the installation location is isolated from sleeping areas, private offices and other acoustically sensitive spaces.
3. Be sure unit is mounted at a height sufficient to provide an adequate slope of the condensate lines. If an appropriate slope cannot be achieved, a field-supplied condensate pump may be required.
4. On horizontal units, allow adequate room below the unit for condensate drain trap and do not locate the unit above supply piping.
5. Provide sufficient space for duct connection. Do not allow the weight of the ductwork to rest on the unit.
6. Provide adequate clearance for filter replacement and drain pan cleaning. Do not allow piping, conduit, etc. to block filter access.
7. Provide sufficient access to allow maintenance and servicing of the blower and blower motor, compressor, refrigerant circuit, controls, and coils.
8. For units with free return (non-ducted), provide adequate space for proper return airflow. For units installed in closets or mechanical rooms, provide sufficient return grill area for proper airflow.
9. Provide ready access to water valves and fittings, and screwdriver access to unit side panels, discharge collar, and all electrical connections.
10. Where access to side panels is limited, pre-removal of the control box side mounting screws may be necessary for future servicing.
11. For units that are installed in enclosed spaces (such as furred in closets or behind finished ceilings), provide access panels to allow for the installation, maintenance, service, and removal of the unit.

IMPORTANT: It is the installing contractor's responsibility to ensure that all equipment is installed with proper access for service, start-up, installation of accessories, configuration of control and other components, and equipment removal in accordance with Carrier's recommended service clearances and installation instructions. Please refer to the Carrier Commercial WSHP Warranty Statement (document number 04-570008-01) for details on warranty exclusions regarding equipment, access, removal and clearances.

Step 2 — Check Unit

Upon receipt of equipment at the jobsite, inspect the carton or crating of each unit, and inspect each unit for damage on both the interior and exterior. Note any damage and contact your local equipment sales office.

⚠ CAUTION

EQUIPMENT DAMAGE HAZARD

DO NOT store or install units in corrosive environments or in locations subject to temperature or humidity extremes (e.g., attics, garages, rooftops, etc.). Corrosive conditions and high temperature or humidity can significantly reduce performance, reliability, and service life. Always move units in an upright position. Tilting units on their sides may cause equipment damage.

INSPECT UNIT

To prepare the unit for installation, complete the procedures listed below:

1. Verify that the correct unit has been received. Check the unit capacity (tonnage), voltage, orientation, and configuration.
2. Compare the electrical data on the unit nameplate with to verify the jobsite power feed (voltage, amperage, MCA) and power protection (MOCP).
3. Verify that the unit is the correct model for the entering water temperature of the job (standard or extended range)
4. Remove the unit packaging, keeping the unit attached to the shipping pallet. Do not destroy packaging. Save for re-installation on the unit if the unit will not be fully installed.
5. Open a unit access panel. Verify that the refrigerant tubing is free of kinks or dents, and that it does not touch other unit components.
6. Check the water piping and piping connections to make sure they are free from defects, kinks, dents, and appear to be water tight. Verify system operating water pressure.
7. Inspect the blower assembly. Verify that the blower has not come lose during shipping. Verify clearance between the blower wheel and the blower housing. Verify free blower rotation.
8. Inspect all electrical connections. Be sure connections are clean and tight at the terminals.
9. Check unit controls. If Better B, Complete C, or Deluxe D, verify field provided thermostat is available. If WSHP Open, verify proper sensor has been provided and a commissioning interface will be available.
10. 50PCH Only - Locate the hanging bracket kit located in the compressor compartment.
11. Remove the foam blower shipping support from underneath the blower section.
12. Remove any shipping brackets from the unit.

Table 1 — Physical Data — 50PCH,PCV (007-030) Units

50PCH,PCV UNIT	007		009		012		015		018		024		030	
	Cu	CuNi	Cu	CuNi	Cu	CuNi	Cu	CuNi	Cu	CuNi	Cu	CuNi	Cu	CuNi
COMPRESSOR (1 each)	Rotary								Rotary		Scroll			
Maximum Water Working Pressure (psig)	400*													
PSC FAN MOTOR AND BLOWER														
Fan Motor Type	PSC													
Fan Motor (hp)	1/10						1/6		1/4					
Blower Wheel Size (Dia x W) (in.)	4.5 x 4.5				5.5 x 4.5		9 x 7							
ECM FAN MOTOR AND BLOWER														
Fan Motor Type/Speeds	N/A						C.A. and C.T. ECM							
Fan Motor (hp)							1/3							
Blower Wheel Size (Dia x W) (in.)							9 x 7							
WATER CONNECTION SIZE														
FPT (in.)	3/4													
Coaxial Coil Volume (gal)	0.06		Cu: 0.06 Cu/Ni: 0.08		0.08		0.09		0.14		0.24			
VERTICAL CABINET														
Refrigeration Charge (oz)	16		19		21		Cu: 19 Cu/Ni: 19 (captube)/ 17 (TXV)		22		Cu: 35 Cu/Ni: 33			
Air Coil Dimensions (H x W) (in.)	10 x 14						12 x 16.5		16 x 16.5		20 x 16.5			
Std. Filter - 1 in. Throwaway (L x H)	10 x 16						16 x 20				20 x 20			
Opt. Filter - 2 in. MERV 8 or 13 Throwaway (L x H)	10 x 16						16 x 20				20 x 20			
Weight - Operating (lb)	98		103		105		123		173		177		190	
Weight - Shipping (lb)	126		130		132		151		201		205		217	
HORIZONTAL CABINET														
Refrigeration Charge (oz)	Cu: 16 Cu/Ni: 19				19				22		Cu: 35 Cu/Ni: 33			
Air Coil Dimensions (H x W)(in.)	10 x 14						12 x 16.5		16 x 16.5		16 x 20.5			
Std. Filter - 1 in. Throwaway (L x H)	10 x 16						16 x 20				16 x 25			
Opt. Filter - 2 in. MERV 8 or 13 Throwaway (L x H)	10 x 16						16 x 20				16 x 25			
Weight - Operating (lb)	96		100		105		136		174		181		190	
Weight - Shipping (lb)	128		132		134		158		208		212		224	

LEGEND

CA — Constant Airflow
CT — Constant Torque
ECM — Electronically Commutated Motor
FPT — Female Pipe Thread
PSC — Permanent Split Capacitor
TXV — Thermostatic Expansion Valve

* 300 psig when unit is built with the 2-way solenoid valve option.

Table 2 — Physical Data — 50PCH,PCV (036-070) Units

50PCH,PCV UNIT	036		041		042		048		060		070	
	Cu	CuNi	Cu	CuNi	Cu	CuNi	Cu	CuNi	Cu	CuNi	Cu	CuNi
COMPRESSOR (1 each)	Scroll											
Maximum Water Working Pressure (psig)	400*											
PSC FAN MOTOR AND BLOWER												
Fan Motor Type	PSC											
Fan Motor (hp)	1/2		3/4		1/2		3/4					
Blower Wheel Size (Dia x W) (in.)	9 x 7		10 x 8						10 x 9		11 x 9	
ECM FAN MOTOR AND BLOWER												
Fan Motor Type/Speeds	C.A. and C.T. ECM											
Fan Motor (hp)	1/2		3/4						1			
Blower Wheel Size (Dia x W) (in.)	9 x 7		10 x 8						11 x 9			
WATER CONNECTION SIZE												
FPT (in.)	3/4						1					
Coaxial Coil Volume (gal)	0.27						0.49		0.62			
VERTICAL CABINET												
Refrigeration Charge (oz)	Cu: 44 Cu/Ni: 40		38		Cu: 43 Cu/Ni: 39		52		59		64	
Air Coil Dimensions (H x W)(in.)	24 x 20.2		20 x 16		24 x 20.2		24 x 26.75				32 x 26.2	
Std. Filter - 1 in. Throwaway (L x H)	24 x 24		20 x 20		24 x 24		24 x 30				16 x 30 (2)	
Opt. Filter - 2 in. MERV 8 or 13 Throwaway (L x H)	24 x 24		20 x 20		24 x 24		24 x 30				16 x 30 (2)	
Weight - Operating (lb)	229		217		239		287		307		336	
Weight - Shipping (lb)	255		243		265		312		331		360	
HORIZONTAL CABINET												
Refrigeration Charge (oz)	40		N/A		Cu: 43 Cu/Ni: 39		51		62		61	
Air Coil Dimensions (H x W)(in.)	18 x 27.5				18 x 27.5		20 x 32				20 X 42	
Std. Filter - 1 in. Throwaway (L x H)	18 x 30				18 x 30		20 x 34.5				20 x 24 (2)	
Opt. Filter - 2 in. MERV 8 or 13 Throwaway (L x H)	18 x 30				18 x 30		20 x 34.5				20 x 24 (2)	
Weight - Operating (lb)	226				231		274		288		316	
Weight - Shipping (lb)	270				264		299		318		365	

LEGEND

CA — Constant Airflow
CT — Constant Torque
ECM — Electronically Commutated Motor
FPT — Female Pipe Thread
PSC — Permanent Split Capacitor
TXV — Thermostatic Expansion Valve

* 300 psig when unit is built with the 2-way solenoid valve option.

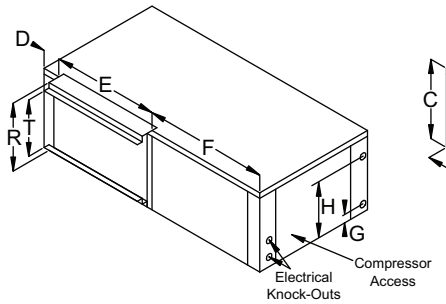

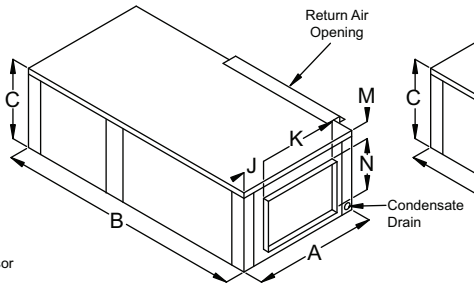

Left Hand Return End Blow (FLE)

NOTE: Models 048 and 060 Left Hand Return units have condenser water connections on the front right and electrical knockouts on the front left.

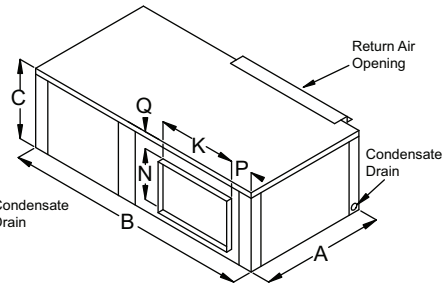

Left Hand Return
Straight Through (FLS)

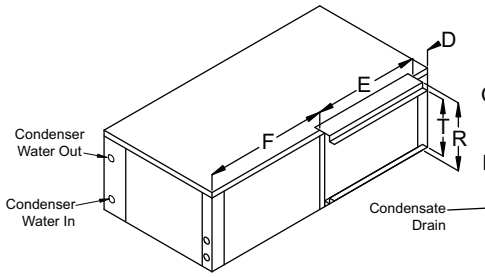

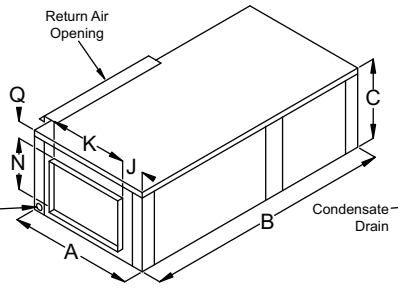

Right Hand Return End Blow (FRE)

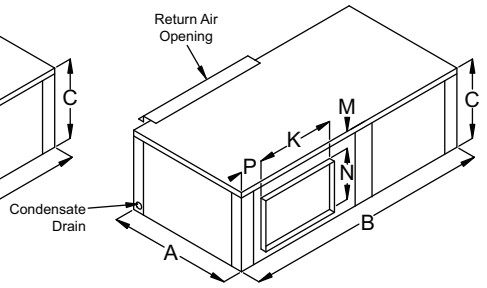

Right Hand Return
Straight Through (FRS)

LEGEND

FLE — Front Water, Left Return, End Supply
FLS — Front Water, Left Return, Straight Through Supply
FRE — Front Water, Right Return, End Supply
FRS — Front Water, Right Return, Straight Through Supply
R/A — Return Air

Service Clearances

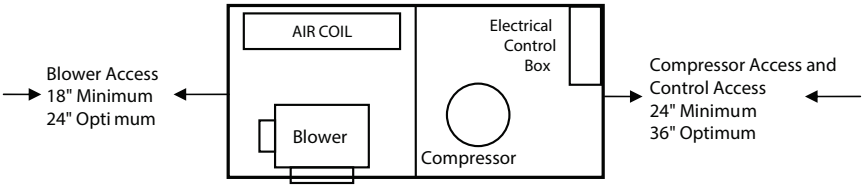

NOTE: Any work required to gain full access to the unit for repair or service is not covered under the scope of the product warranty.

50PCH UNIT SIZE	A WIDTH *	B DEPTH †	C HEIGHT	D CAB END TO FILTER RACK	E R/A DUCT WIDTH	F CAB FRONT TO FILTER RACK	G WATER INLET	H WATER OUTLET	J SIDE TO DISC. WIDTH	K DISC. WIDTH	M TOP TO DISC. (FLE AND FRS)	N DISC. HEIGHT	P END TO DISC. (STR)	Q TOP TO DISC. (FRE AND FLS)	R FILTER RACK HEIGHT	T R/A DUCT FLANGE HEIGHT	CONDENSER WATER CONNECTIONS FPT	RECOMMENEDED REPLACEMENT NOMINAL FILTER SIZE
007	19.0	33.0	11.5	1.5	16.15	15.35	2.38	9.50	5.375	6.30	5.97	4.10	4.875	1.41	11.3	8.6	3/4	10x16x1
009	19.0	33.0	11.5	1.5	16.15	15.35	2.38	9.50	5.375	6.30	5.97	4.10	4.875	1.41	11.3	8.6	3/4	10x16x1
012	19.0	33.0	11.5	1.5	16.15	15.35	2.38	9.50	5.250	6.43	6.31	4.10	4.750	1.14	11.3	8.6	3/4	10x16x1
015	22.0	43.0	17.0††	1.5	20.15	21.35	2.86	15.00	8.150	6.43	9.55	4.10	7.650	3.40	16.8	15.0	3/4	16x20x1
015**	22.0	43.0	17.0††	1.5	20.15	21.35	2.86	15.00	5.420	9.13	6.11	9.65	4.920	1.23	16.8	15.0	3/4	16x20x1
018	22.0	43.0	17.0††	1.5	20.15	21.35	2.86	14.13	5.420	9.13	6.11	9.65	4.920	1.23	16.8	15.0	3/4	16x20x1
024	22.0	43.0	18.0	1.5	25.00	16.50	2.86	14.13	5.420	9.13	6.11	9.65	4.920	1.23	16.8	15.0	3/4	16x25x1
030	22.0	43.0	18.0	1.5	25.00	16.50	2.47	15.00	5.420	9.13	6.11	9.65	4.920	1.23	16.8	15.0	3/4	16x25x1
036	22.0	54.5	19.0	1.5	30.15	22.85	2.86	16.13	6.470	9.13	7.50	10.28	5.970	1.21	18.8	17.0	3/4	18x30x1
042	22.0	54.5	19.0	1.5	30.15	22.85	2.86	16.13	5.270	10.45	6.46	11.30	4.770	1.22	18.8	17.0	3/4	18x30x1
048	25.0	54.5	21.0	1.5	34.60	18.40	2.86	18.52	7.250	10.45	7.46	11.36	6.750	2.16	20.8	19.0	1	20x34.5x5x1
060	25.0	54.5	21.0	1.5	34.60	18.40	2.86	18.52	6.320	11.76	6.81	12.50	5.820	1.68	20.8	19.0	1	20x34.5x5x1
070	25.0	65.0	21.0	1.5	48.10	15.40	2.86	18.52	6.320	11.76	6.81	12.50	5.820	1.68	20.8	19.0	1	20x24x1 (2)

*When waterside economizer is installed, increase width by 7 inches.
†When WSHP Open Controller is installed, increase depth by 2.6 inches. When waterside economizer is installed, increase depth by 7 inches.
**50PCH015 units built with ECM motor option.
††When waterside economizer is installed, increase height by 1 inch.

NOTES:
1. All dimensions are within ± 0.125 inch.
2. All condensate drain connections are 3/4 in. FPT.
3. Unit sizes 015-070 can be field converted between end blow and straight through supply air configurations.
4. Specifications subject to change without notice.
5. The 1-in. filter rack extends 1.23-in. beyond the side of the unit. The 2-in. filter rack extends 2.89-in. beyond the side of the unit. The 2-in. filter rack is 4-sided with a filter access door on one end and can accept either a 1-in. or 2-in. filter.

Fig. 1 — 50PCH007-070 Unit Dimensions

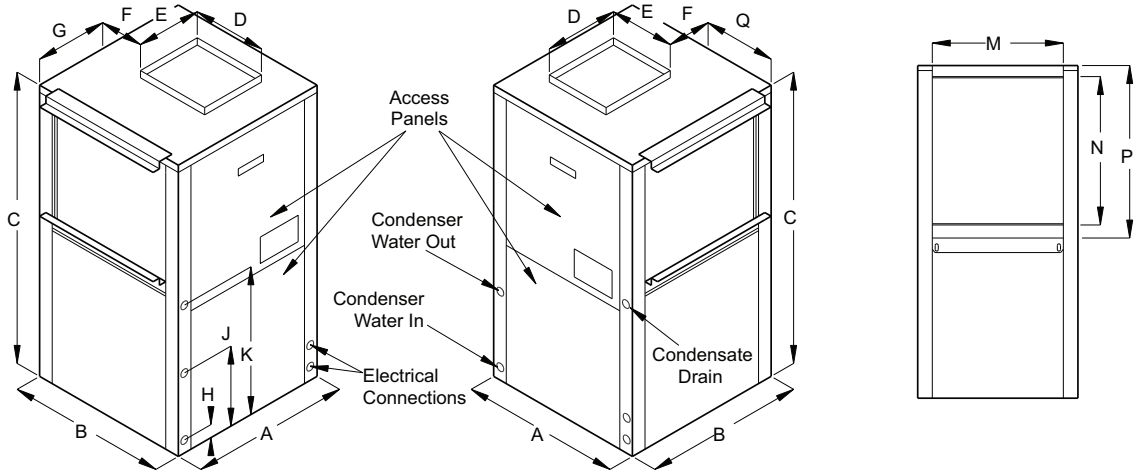

Left Hand Return **Right Hand Return** **Return Air (Filter) View**

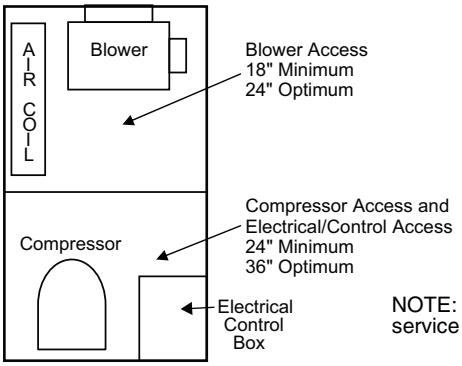

Front of Unit
Service Clearances

NOTE: Any work required to gain full access to the unit for repair or service is not covered under the scope of the product warranty.

50PCV UNIT SIZE	A WIDTH *	B DEPTH †	C HEIGHT	D DISC. DEPTH	E DISC. WIDTH	F CABINET EDGE TO DISC.	G LEFT SIDE TO DISC.	H WATER INLET	J WATER OUTLET	K CONDENSATE DRAIN	M R/A DUCT WIDTH	N R/A DUCT FLANGE HEIGHT	P FILTER RACK HEIGHT	Q	CONDENSER WATER CONNECTIONS FPT	RECOMMENEDED REPLACEMENT NOMINAL FILTER SIZE
007	19.0	19.00	24.25	10.0	8.0	4.5	9.3	2.44	9.68	13.87	16.0	8.0	10.0	5.4	3/4	10x16x1
009	19.0	19.00	24.25	10.0	8.0	4.5	9.3	2.44	9.68	13.87	16.0	8.0	10.0	5.4	3/4	10x16x1
012	19.0	19.00	24.25	10.0	8.0	4.5	9.3	2.44	9.68	13.87	16.0	8.0	10.0	5.4	3/4	10x16x1
015	21.5	21.50	32.25	10.0	8.0	5.8	10.0	2.85	8.45	15.87	20.0	14.0	16.0	3.5	3/4	16x20x1
015**	21.5	21.50	32.25	14.0	14.0	3.1	5.2	2.85	8.45	15.87	20.0	14.0	16.0	5.2	3/4	16x20x1
018	21.5	21.50	32.25	14.0	14.0	3.1	5.2	2.85	8.45	15.87	20.0	14.0	16.0	5.2	3/4	16x20x1
024	21.5	21.50	39.25	14.0	14.0	3.1	5.2	2.80	8.45	18.87	20.0	18.0	20.0	5.2	3/4	20x20x1
030	21.5	21.50	39.25	14.0	14.0	3.1	5.2	2.80	8.45	18.87	20.0	18.0	20.0	5.2	3/4	20x20x1
036	21.5	26.00	43.25	16.0	14.0	4.0	5.0	2.75	10.77	18.87	24.0	22.0	24.0	5.0	3/4	24x24x1
041	21.5	21.50	40.25	16.0	14.0	1.7	4.7	2.80	8.45	18.87	20.0	18.0	20.0	4.7	3/4	20x20x1
042	21.5	26.00	44.25	16.0	14.0	4.0	5.0	2.75	10.77	18.87	24.0	22.0	24.0	5.0	3/4	24x24x1
048	24.0	32.50	45.25	18.0	14.0	7.0	6.2	3.26	13.20	20.87	30.0	22.0	24.0	6.2	1	24x30x1
060	24.0	32.50	45.25	18.0	14.0	7.0	6.2	3.26	13.20	20.87	30.0	22.0	24.0	6.2	1	24x30x1
070	26.0	33.25	58.25	18.0	16.0	7.8	7.2	2.92	13.36	25.87	30.0	30.0	32.0	7.2	1	16x30x1 (2)

* When waterside economizer is installed, increase width by 7 inches for Left Hand Return Units, increase width by 12 inches for Right Hand Return Units
† When WSHP Open Controller is installed, increase depth by 2.6 inches. When Waterside economizer is installed, increase depth by 7 inches.
** 50PCV015 units built with ECM motor option.

NOTES:
1. All dimensions are within ± 0.125 inch.
2. All condensate drain connections are 3/4 in. FPT.
3. Specifications subject to change without notice.
4. The 1-in. filter rack extends 1.23-in. beyond the side of the unit. The 2-in. filter rack extends 2.89-in. beyond the side of the unit. The 2-in. filter rack is 4 sided with a filter access door on one end and can accept either a 1-in. or 2-in. filter.

Fig. 2 — 50PCV007-070 Unit Dimensions

Step 3 — Locate Unit

Locate the unit in an indoor area that allows easy removal of the filter and access panels, and has enough room for service personnel to perform maintenance or repair. Provide sufficient room to make fluid, electrical, and duct connection(s). If the unit is located in a confined space such as a closet, provisions must be made for return air to freely enter the space.

Unit condensate drains are not internally trapped. Allow room below the unit base for horizontal models for an adequate condensate trap.

These units are not approved for outdoor installation; therefore, they must be installed inside the structure being conditioned. Do not locate units in areas that are subject to freezing. Units must be installed in conditioned space that is not subject to extremes of temperature or humidity to avoid cabinet sweating and/or equipment damage.

IMPORTANT: Care must be taken to prevent the introduction of dust, pain, debris, or chemicals into the unit, which can cause damage to the unit, delay start-up, and may impact unit longevity.

Do not use units for temporary heating, air conditioning or ventilation during construction or remodeling, especially when plastering, sanding or painting or when replacing carpet or flooring. Dust and debris can clog the coil and blower. Chemical vapors can lead to formicary corrosion and damage the coil. Ensure adequate ventilation and debris collection during construction or remodeling.

PROTECTION

Once the units are properly positioned on the jobsite, cover them with either a shipping carton, vinyl film, or an equivalent protective covering. Cap open ends of pipes stored on the jobsite. This precaution is especially important in areas where painting, plastering, or spraying of fireproof material, etc. is not yet complete. Foreign material that accumulates within the units can prevent proper start-up and require costly clean-up operations. Before installing any of the system components, be sure to examine each pipe, fitting, and valve, and remove any dirt or foreign material found in or on these components.

Step 4 — Mount the Unit

DUCT FLANGES

The unit heat pumps feature foldout return and supply air duct flanges. These fold-out flanges allow the heat pumps to more easily fit through doorways and other tight spaces, and also prevent damage in shipping and handling.

It is recommended that all fold-out flanges be folded out once the heat pump is installed to ensure that return and supply airflow is not obstructed. These flanges can be easily folded using standard or duckbill pliers. Once folded out these flanges can be used to support light ductwork loads.

HORIZONTAL UNITS (50PCH)

While horizontal units may be installed on any level surface strong enough to hold their weight, they are typically suspended above a ceiling by threaded rods. All horizontal units come with a Hanging Bracket Kit to facilitate suspended unit mounting. Hanging brackets are installed as shown in Fig. 3.

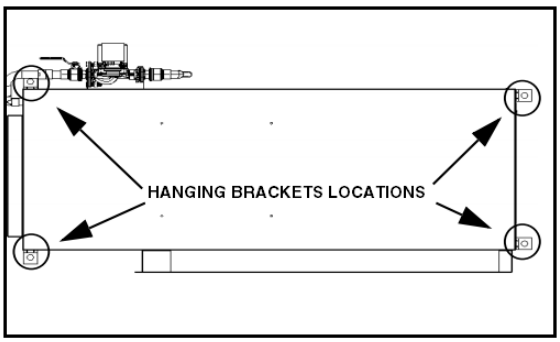

Fig. 3 — Hanging Bracket Locations

The hanging bracket kit includes the following:

- (5) Brackets
- (5) Rubber vibration isolators
- (8) Screws #10 x 1/2 in.
- (10) Bolts 1/4 – 28 x 1/2 in. hex bolt (not used on this model)

The following additional materials are needed and must be field-supplied:

- Threaded rod (3/8 in. maximum diameter)
- Hex nuts
- Washers (1-3/4 in. minimum O.D.)

Hanging Bracket Installation

1. Remove and discard factory-provided screws from location where hanging brackets will be installed. (See Fig. 4.)

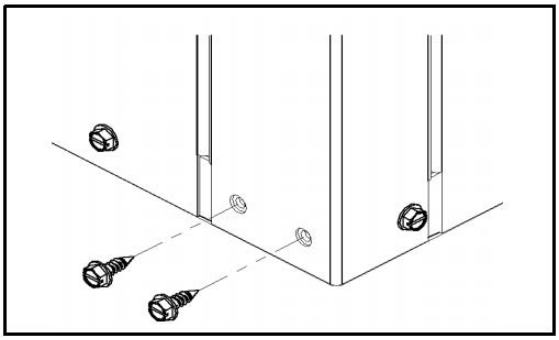

Fig. 4 — Removing Factory Screws

2. Mount 4 brackets to unit corner post using the bolts provided in the kit, as shown in Fig. 5. DO NOT re-use the screws removed from the unit during Step 1 to mount the hanging brackets on the unit.

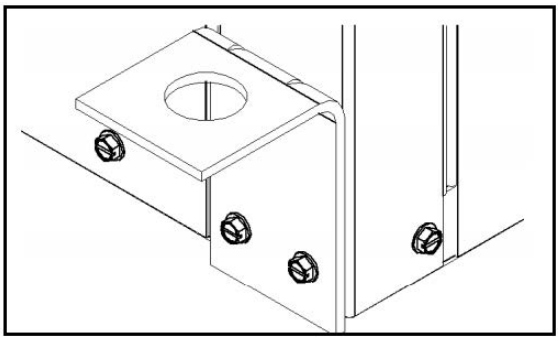

Fig. 5 — Mounting Brackets

3. Install rubber grommet on the bracket as shown in Fig. 6.
4. Hang the unit and assemble the field-provided threaded rod, nuts, and washers on the brackets as shown in Fig. 6.

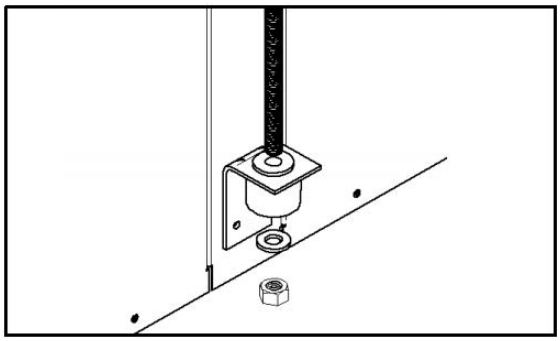

Fig. 6 — Hanging the Unit

IMPORTANT: Units larger than six tons include an integral angle iron frame with mounting holes present.

Horizontal units installed above the ceiling must conform to all local codes. An auxiliary drain pan if required by code, should be at least 4 in. larger than the bottom of the heat pump.

Plumbing connected to the heat pump must not come in direct contact with joists, trusses, walls, etc. Some applications require an attic floor installation of the horizontal unit. In this case the unit should be set in a full size secondary drain pan on top of a vibration absorbing mesh.

The secondary drain pan prevents possible condensate overflow or water leakage damage to the ceiling. The secondary drain pan is usually placed on a plywood base isolated from the ceiling joists by additional layers of vibration absorbing mesh. In both cases, a 3/4 in. drain connected to this secondary pan should be run to an eave at a location that will be noticeable.

⚠ CAUTION

If the unit is located in a crawl space, the bottom of the unit must be at least 4-in. above grade to prevent flooding of the electrical parts due to heavy rains.

VERTICAL UNITS (50PCV)

Vertical units should be mounted level on a vibration absorbing pad slightly larger than the unit base in order to minimize vibration transmission from the unit to the building structure. (See Fig. 7.) It is generally not necessary to anchor the unit unless required by local code.

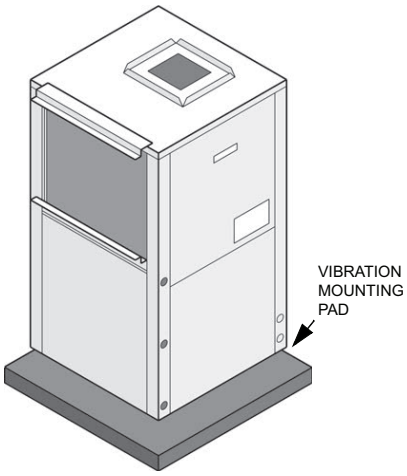

Fig. 7 — Mounting Vertical Units

All major service access for the vertical models is from the front side of the unit. When installing the unit in a confined space such as a closet, ensure that the service panel screws are accessible, that the filter can be replaced without damage and that water and electrical connections are accessible. For models with a unit-mounted disconnect switch, make sure the switch can be easily seen and operated.

To reduce sound transmission, units should be installed using flexible electrical conduit and hose kits. Care should be taken to ensure that no part of the unit cabinet is touching part of the building structure. For ducted return applications, a flexible duct connection should be used. Mount the unit on a vibration absorption pad slightly larger than the entire base to minimize vibration transmission. It is not necessary to mount the unit on the floor.

Step 5 — Check Duct System

All units are provided with a return air duct flange and supply air duct connections. Refer to unit dimensional drawings (Fig. 1 and 2) for physical dimensions of the collar and flange.

A flexible connector is recommended for supply and return air duct connections on metal duct systems. All metal ducting should be insulated with a minimum of 1 in. duct insulation to avoid heat loss or gain and prevent condensate from forming during the cooling operation. Application of the unit to uninsulated ductwork is not recommended as the unit's performance will be adversely affected.

⚠ CAUTION

Do not connect discharge ducts directly to the blower outlet. The factory filter rack should be left in place on a free return system.

If the unit will be installed in a new installation with new ductwork, the installation should be designed using current ASHRAE (American Society of Heating, Refrigerating, and Air-Conditioning Engineers) procedures for duct sizing. If the unit will be connected to an existing duct system, a check should be made to assure that the duct system has the capacity to handle the air required for the unit application. If the duct system is too small, larger ductwork must be installed. Be certain to check for existing leaks and repair. The duct system and all diffusers should be sized to handle the designed airflow quietly. To maximize sound attenuation of the unit blower, the supply and return air plenums should be insulated. There should be no direct straight air path through the air grille into the heat pump. The return air inlet to the heat pump must have at least one 90-degree turn away from the space return air grille. If air noise or excessive airflow are a problem, the blower speed can be changed to a lower speed to reduce airflow. (Refer to motor speeds and settings in Tables 10 and 11 on page 40.)

HORIZONTAL SUPPLY AIR CONFIGURATION CONVERSION

The supply air location on horizontal units can be quickly field converted from end blow to straight through or vice-versa. To convert the supply air direction, follow the steps below:

1. If connected to power, shut off the unit and disconnect switch or circuit breaker.
2. Unscrew and remove the blower access panel.
3. Disconnect the wires from the unit electrical box to the blower motor. Note which speed taps are wired for units with PSC or constant torque motors.
4. Unscrew and carefully remove the blower panel with the blower and motor attached. Be careful not to damage the refrigerant coils or any other internal unit components.

5. Remove the blower support brackets from the bottom of the blower housing and relocate them to the top of the blower housing.
6. Turn the blower panel 180 degrees so that the blower support brackets are now at the bottom of the blower.
7. Insert the blower panel with the blower and motor into the desired location. Be careful not to damage the refrigerant coils or any other internal unit components. Screw the panel into place.
8. Replace the wires between the blower motor and electrical box. Make sure to connect wires to the proper speed taps.
9. Replace the blower access panel.
10. Reconnect power to the unit.

Step 6 — Install Condensate Drain

All units include a condensate drain pan under the evaporator coil. Units with waterside economizer have an additional condensate drain pan under the economizer coil. A drain line must be connected to each drain pain and pitched away from the unit a minimum of 1/8 in. per foot to allow the condensate to flow away from the unit.

This connection must be in conformance with local plumbing codes. A trap must be installed in the condensate line to ensure free condensate flow. (Heat pumps are not internally trapped.) A vertical air vent is sometimes required to avoid air pockets. (See Fig. 8.)

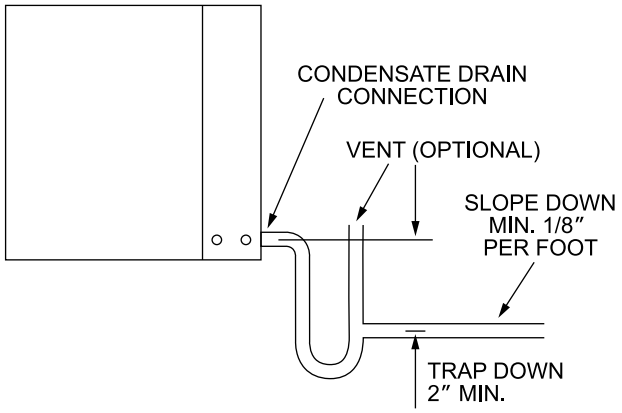

Fig. 8 — Condensate Drain

The depth of the trap depends on the amount of positive or negative pressure on the drain pan. A second trap must not be included. The horizontal unit should be pitched approximately 1/4 in. towards the drain in both directions, to facilitate condensate removal. (See Fig. 9.)

Step 7 — Pipe Connections

Depending on the application, there are 3 types of WSHP piping systems to choose from: water loop, ground-water and ground loop. Refer to Piping Section of Carrier System Design Manual for additional information.

All WSHP units use female pipe thread fittings for water connections. Refer to Tables 1 and 2 for connection sizes. When making piping connections, consider the following:

- Use a backup wrench when making screw connections to unit to prevent internal damage to piping.
- Insulation may be required on piping to avoid condensation in the case where fluid in loop piping operates at temperatures below dew point of adjacent air.

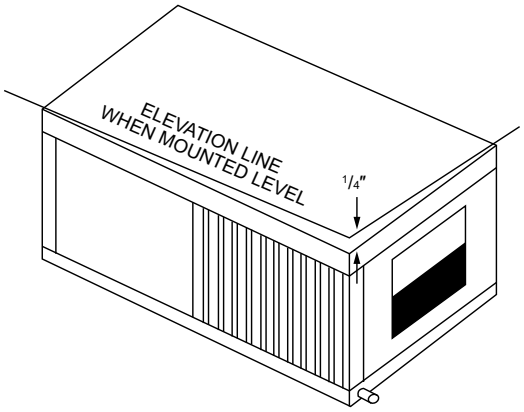

Fig. 9 — Pitched Unit

- Piping systems that contain steel pipes or fittings may be subject to galvanic corrosion. Dielectric fittings may be used to isolate the steel parts of the system to avoid galvanic corrosion.

WATER LOOP APPLICATIONS

Water loop applications usually include a number of units plumbed to a common piping system. Maintenance to any of these units can introduce air into the piping system. Therefore, air elimination equipment comprises a major portion of the mechanical room plumbing.

The flow rate is usually set between 2.25 and 3 gpm per ton of cooling capacity. For proper maintenance and servicing, pressure-temperature (P/T) ports are necessary for temperature and flow verification.

In addition to complying with any applicable codes, consider the following for system piping:

- Piping systems using water temperatures below 50°F require 1/2 in. closed cell insulation on all piping surfaces to eliminate condensation.
- Avoid all plastic to metal threaded fittings due to the potential to leak. Use a flange fitted substitute.
- Teflon[1] tape thread sealant is recommended to minimize internal fouling of the heat exchanger.
- Use backup wrench. Do not overtighten connections.
- Route piping to avoid service access areas to unit.
- Flush the piping system prior to operation to remove dirt and foreign materials from the system.

GROUND LOOP APPLICATIONS

Temperatures between 25°F and 110°F and a cooling capacity of 2.25 to 3 gpm of flow per ton are recommended. In addition to complying with any applicable codes, consider the following for system piping:

- Limit piping materials to only polyethylene fusion in the buried sections of the loop.
- Do not use galvanized or steel fittings at any time due to corrosion.
- Avoid all plastic to metal threaded fittings due to the potential to leak. Use a flange fitted substitute.
- Do not overtighten connections.
- Route piping to avoid service access areas to unit.
- Use pressure-temperature (P/T) plugs to measure flow of pressure drop.

1. Teflon is a registered trademark of DuPont.

INSTALLING SUPPLY AND RETURN HOSE KIT

Follow these piping guidelines:

1. Install a drain valve at the base of each supply and return riser to facilitate system flushing.
2. Install shutoff/balancing valves and unions at each unit to permit unit removal for servicing.
3. Place strainers at the inlet of each system circulating pump.
4. Select the proper hose length to allow slack between connection points. Hoses may vary in length by +2% to –4% under pressure.
5. Do not exceed the minimum bend radius for the hose selected. Refer to Table 3. Exceeding the minimum bend radius may cause the hose to collapse, which reduces water flow rate. Install an angle adapter to avoid sharp bends in the hose when the radius falls below the required minimum.

NOTE: Piping must comply with all applicable codes.

Table 3 — Metal Hose Minimum Bend Radii

HOSE DIAMETER (in.)	MINIMUM BEND RADII (in.)
1/2	2 -1/2
3/4	4
1	5 -1/2

Insulation is not required on loop water piping except where the piping runs through unheated areas or outside the building or when the loop water temperature is below the minimum expected dew point of the pipe ambient. Insulation is required if loop water temperature drops below the dew point.

UNITS WITH WATERSIDE ECONOMIZER OR BOILERLESS HEAT CONTROL

Units with Complete C or Deluxe D controls and waterside economizer or units with boilerless heat control (Deluxe D Only) include an aquastat with a remote sensing bulb. Units built with the waterside economizer option are not available with the Better B Package.

IMPORTANT: Do not bend or kink supply lines or hoses.

Pipe joint compound is not necessary when Teflon threaded tape is pre-applied to hose assemblies or when flared-end connections are used. If pipe joint compound is preferred, use compound only in small amounts on the male pipe threads of the fitting adapters. Prevent sealant from reaching the flared surfaces of the joint.

NOTE: When anti-freeze is used in the loop, assure that it is compatible with Teflon tape or pipe joint compound employed.

Maximum allowable torque for brass fittings is 30 ft-lb. If a torque wrench is not available, tighten finger-tight plus one quarter turn. Tighten steel fittings as necessary.

Optional pressure-rated hose assemblies designed specifically for use with Carrier units are available. Similar hoses can be obtained from alternate suppliers. Supply and return hoses are fitted with swivel-joint fittings at one end to prevent kinking during installation.

⚠ CAUTION

Backup wrench is required when tightening water connections to prevent water line damage. Failure to use a backup wrench could result in equipment damage.

Male adapters secure hose assemblies to the unit and risers. Install hose assemblies properly and check them regularly to avoid system failure and reduced service life. (See Fig. 10.

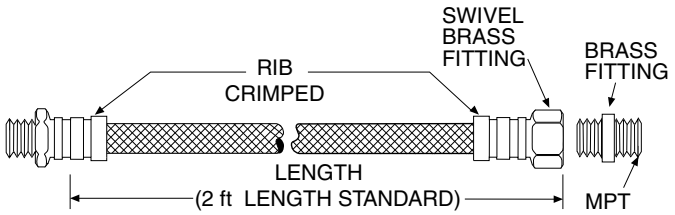

Fig. 10 — Supply/Return Hose Kit

AQUASTAT BULB INSTALLATION

Units with Complete C or Deluxe D controls and waterside economizer or units with Boilerless Heat Control (all Deluxe D) include an aquastat with remote sensing bulb that must be field installed on the incoming water piping. The remote sensing bulb must be installed on a straight section of uninsulated pipe that provides a good measurement of the entering water temperature. It is recommended to insulate the sensing bulb after installation for better water temperature sensing.

Step 8 — Wire Field Power Supply

See Fig. 11-29 for typical wiring diagrams. See Tables 4-6 for additional electrical data. Please refer to the unit wiring diagram attached to the control panel for field installation.

⚠ WARNING

To avoid possible injury or death due to electrical shock, open the power supply disconnect switch and secure it in an open position during installation.

⚠ CAUTION

All power connections must be properly torqued to avoid the risk of overheating.

HIGH VOLTAGE

All field-installed wiring must comply with the National Electric Code as well as all applicable local codes. Refer to the unit electrical data on the unit nameplate for wire and branch circuit protection sizing. Supply power voltage and phasing should match the required voltage and phasing shown on the unit nameplate. Operating the unit below the minimum voltage, above the maximum voltage or with incorrect phasing can result in poor system performance or damage to the heat pump. All field wiring should be installed by qualified and trained personnel. Refer to the unit wiring diagram for field connection requirements.

Power wiring to the heat pump should be enclosed in flexible conduit to minimize the transmission of vibration from the unit cabinet to the building.

For heat pumps with unit mounted disconnect switches, field power should be connected to the marked terminals on the disconnect switch. For heat pumps without unit-mounted disconnect switches (except units with dual power supply), power is connected to the line (L) side of the compressor contactor and the ground lug in the unit electrical box.

⚠ CAUTION

The power supply ground wire should never be used as a neutral wire.

Transformer Settings for 208/230-v Units

As factory built, all 208/230-v units are wired for 230-v operation. For jobsites with a 208-v power supply, the primary leads on the unit transformer will need to be changed from 230-v to 208-v. Refer to the unit wiring diagram for details.

UPM STATUS LED - BLINK CODES	
1	HIGH PRESSURE FAULT
2	LOW PRESSURE FAULT
3	CONDENSER FREEZE CONDITION
4	CONDENSATE OVERFLOW FAULT
5	BROWN OUT FAULT
6	EVAPORATOR FREEZE CONDITION

FACTORY WIRE ————————

FIELD WIRE - - - - - - - - -

STANDARD COMPONENTS LEGEND:
BC – BLOWER MOTOR CAPACITOR
BM – BLOWER MOTOR
BR – BLOWER RELAY
CAP – COMPRESSOR CAPACITOR
CC – COMPRESSOR CONTACTOR
COMP – COMPRESSOR
CS – CONDENSATE SENSOR (IN DRAIN PAN)
FS – FREEZE SENSOR
HPS – HIGH PRESSURE SWITCH
LPS – LOW PRESSURE SWITCH
RV – REVERSING VALVE (HEAT PUMPS)

OPTIONAL COMPONENTS LEGEND:
[ ] DS – DISCONNECT SWITCH
[ ] HSL – HIGH TEMPERATURE SUCTION LIMIT (WITH HOT GAS BYPASS ONLY)
[ ] LWV – LEAVING WATER VALVE
[ ] VES – VALVE END SWITCH

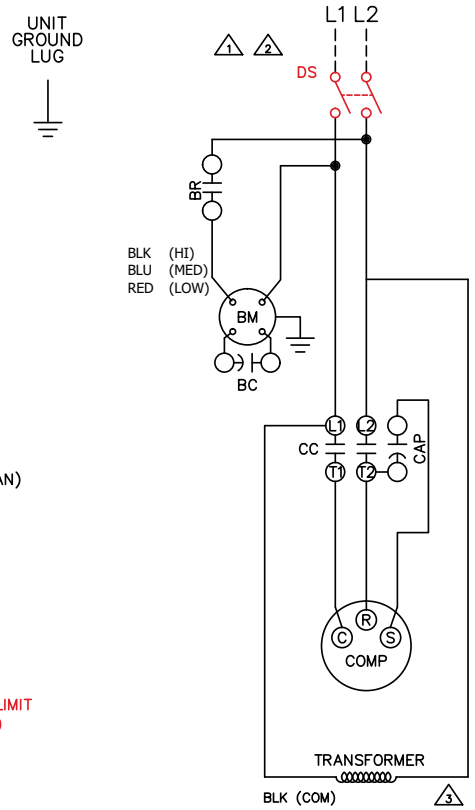

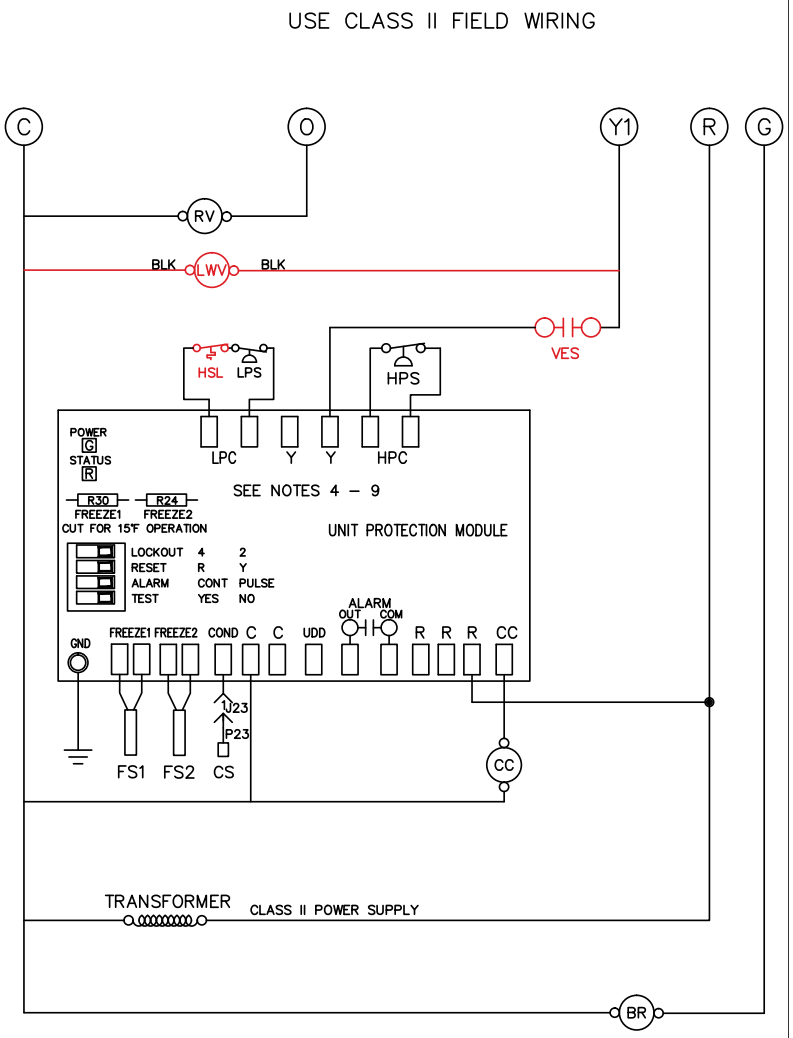

NOTES:
1. SEE UNIT NAME PLATE FOR ELECTRICAL RATING.
2. ALL FIELD WIRING MUST BE IN ACCORDANCE WITH N.E.C.–N.F.P.A. #70, COPPER CONDUCTORS ONLY – CONDUCTEURS EN CUIVRE SEULEMENT.
3. 208/230V UNITS ARE FACTORY WIRED FOR 230V OPERATION. FOR 208V OPERATION, REMOVE LEAD FROM 240 TERMINAL AND CONNECT IT TO 208. CAP ALL UNUSED TERMINALS.
4. UPM–I INCLUDES BUILT IN: 270–300 SECOND RANDOM START
   300 SECOND DELAY ON BREAK
   120 SECOND LOW PRESSURE BYPASS
5. "TEST" DIP SWITCH REDUCES DELAYS TO 10 SEC WHEN SET TO YES. MUST BE SET TO "NO" FOR NORMAL OPERATION.
6. "FREEZE SENSOR" ON CONDENSER WILL OPERATE AT 26°F BY DEFAULT, IF 15°F OPERATION IS REQUIRED JUMPER R30 MUST BE CUT IF FREEZE SENSOR IS NOT INSTALLED A JUMPER SHALL BE INSTALLED BETWEEN THE FREEZE1 OR FREEZE2 SENSOR TERMINALS.
7. "ALARM OUTPUT" DIP SWITCH MUST BE SET TO "PULSE" IF BLINKING T–STAT SERVICE LIGHT IS DESIRED.
8. DEFAULT SETTINGS FOR UPM BOARD FROM FACTORY SHOWN. ALSO SEE INSTALLATION MANUAL.
9. ALARM OUTPUT IS NORMALLY OPEN (NO) DRY CONTACT. IF 24 VAC IS NEEDED, CONNECT R TO ALR–COM TERMINAL, 24VAC WILL BE SENSED ON THE ALR–OUT WHEN THE UNIT IS IN ALARM CONDITION. OUTPUT WILL BE PULSED IF PULSE IS SELECTED.

50PC11100 Rev. 5

Fig. 11 — PSC Motor, Single Phase/Single Stage, Better B or Complete C Control

UPM STATUS LED - BLINK CODES	
1	HIGH PRESSURE FAULT
2	LOW PRESSURE FAULT
3	CONDENSER FREEZE CONDITION
4	CONDENSATE OVERFLOW FAULT
5	BROWN OUT FAULT
6	EVAPORATOR FREEZE CONDITION

FACTORY WIRE ————————

FIELD WIRE - - - - - - - - -

STANDARD COMPONENTS LEGEND:

AUX – AUXILIARY RELAY (FOR LOOP PUMP, ETC)
BC – BLOWER MOTOR CAPACITOR
BCA – BOILERLESS CONTROL AQUASTAT
BM – BLOWER MOTOR
BR – BLOWER RELAY
CAP – COMPRESSOR CAPACITOR
CBR – 24V CIRCUIT BREAKER
CC – COMPRESSOR CONTACTOR
COMP – COMPRESSOR
CS – CONDENSATE SENSOR (IN DRAIN PAN)
EMS – ENERGY MGMT SYSTEM RELAY
FS – FREEZE SENSOR
HCR – HEATING/COOLING RELAY
HPS – HIGH PRESSURE SWITCH
LED – UNIT STATUS LED
LP – LOOP PUMP (FIELD INSTALLED)
LPS – LOW PRESSURE SWITCH
RV – REVERSING VALVE (HEAT PUMPS)

OPTIONAL COMPONENTS LEGEND:

[ ] DS – DISCONNECT SWITCH
[ ] HGV – HOT GAS VALVE SOLENOID (WITH HGRH AND 560 CONTROLLER ONLY)
[ ] HSL – HIGH TEMPERATURE SUCTION LIMIT (WITH HOT GAS BYPASS ONLY)
[ ] LWV – LEAVING WATER VALVE
[ ] VES – VALVE END SWITCH

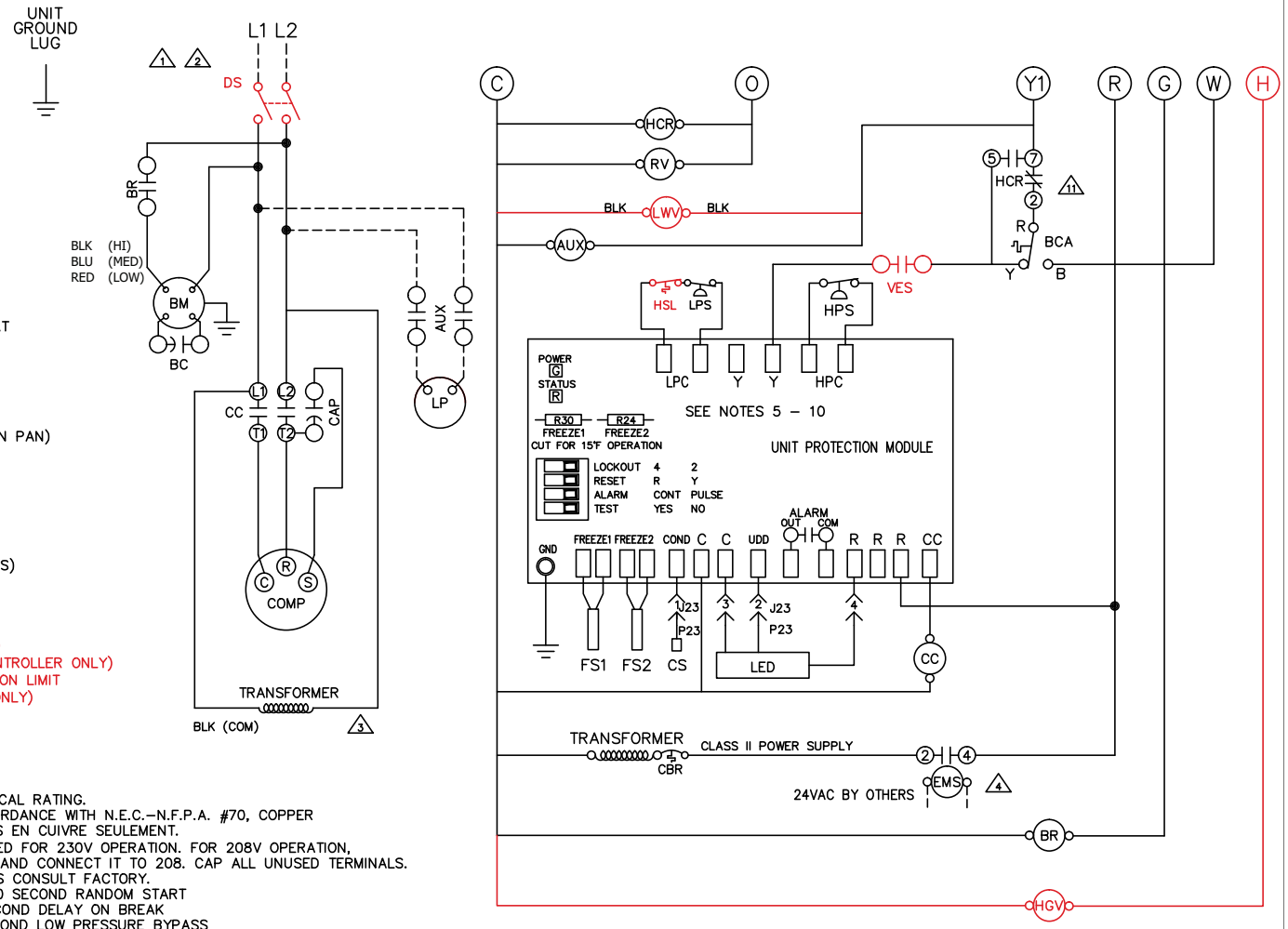

NOTES:

1. SEE UNIT NAME PLATE FOR ELECTRICAL RATING.
2. ALL FIELD WIRING MUST BE IN ACCORDANCE WITH N.E.C.–N.F.P.A. #70, COPPER CONDUCTORS ONLY – CONDUCTEURS EN CUIVRE SEULEMENT.
3. 208/230V UNITS ARE FACTORY WIRED FOR 230V OPERATION. FOR 208V OPERATION, REMOVE LEAD FROM 240 TERMINAL AND CONNECT IT TO 208. CAP ALL UNUSED TERMINALS.
4. FOR ALTERNATE EMS COIL VOLTAGES CONSULT FACTORY.
5. UPM–I INCLUDES BUILT IN: 270–300 SECOND RANDOM START
   300 SECOND DELAY ON BREAK
   120 SECOND LOW PRESSURE BYPASS
6. "TEST" DIP SWITCH REDUCES DELAYS TO 10 SEC WHEN SET TO YES. MUST BE SET TO "NO" FOR NORMAL OPERATION.
7. "FREEZE SENSOR" ON CONDENSER WILL OPERATE AT 26°F BY DEFAULT, IF 15°F OPERATION IS REQUIRED JUMPER R30 MUST BE CUT IF FREEZE SENSOR IS NOT INSTALLED A JUMPER SHALL BE INSTALLED BETWEEN THE FREEZE1 OR FREEZE2 SENSOR TERMINALS.
8. "ALARM OUTPUT" DIP SWITCH MUST BE SET TO "PULSE" IF BLINKING T–STAT SERVICE LIGHT IS DESIRED.
9. DEFAULT SETTINGS FOR UPM BOARD FROM FACTORY SHOWN. ALSO SEE INSTALLATION MANUAL.
10. ALARM OUTPUT IS NORMALLY OPEN (NO) DRY CONTACT. IF 24 VAC IS NEEDED, CONNECT R TO ALR–COM TERMINAL, 24VAC WILL BE SENSED ON THE ALR–OUT WHEN THE UNIT IS IN ALARM CONDITION. OUTPUT WILL BE PULSED IF PULSE IS SELECTED.
11. BCA CONTACTS R–Y OPEN ON DROP IN WATER TEMPERATURE AND R–B CLOSE.

50PC111001 Rev. 5

Fig. 12 — PSC Motor, Single Phase/Single Stage, Deluxe D Control

UPM STATUS LED - BLINK CODES	
1	HIGH PRESSURE FAULT
2	LOW PRESSURE FAULT
3	CONDENSER FREEZE CONDITION
4	CONDENSATE OVERFLOW FAULT
5	BROWN OUT FAULT
6	EVAPORATOR FREEZE CONDITION

FACTORY WIRE ————————

FIELD WIRE - - - - - - - -

STANDARD COMPONENTS LEGEND:
BC – BLOWER MOTOR CAPACITOR
BM – BLOWER MOTOR
BR – BLOWER RELAYS (1, 2, 3)
COMP – COMPRESSOR
CBR – 24V CIRCUIT BREAKER
CAP – COMPRESSOR CAPACITOR
CC – COMPRESSOR CONTACTOR
CMR – COMPRESSOR MONITOR RELAY
CS – CONDENSATE SENSOR (IN DRAIN PAN)
FS – FREEZE SENSOR
HPS – HIGH PRESSURE SWITCH
LPS – LOW PRESSURE SWITCH
RV – REVERSING VALVE (HEAT PUMPS)

OPTIONAL COMPONENTS LEGEND:
[ ] DS – DISCONNECT SWITCH
[ ] F/A – FIRE ALARM RELAY CONTACTS
[ ] HGV – HOT GAS VALVE SOLENOID
[ ] HSL – HIGH TEMPERATURE SUCTION LIMIT (WITH HOT GAS BYPASS ONLY)
[ ] MBV – MOTORIZED BALL VALVE
[ ] MVR – MOTORIZED VALVE RELAY
[ ] LWV – LEAVING WATER VALVE
[ ] VES – VALVE END SWITCH

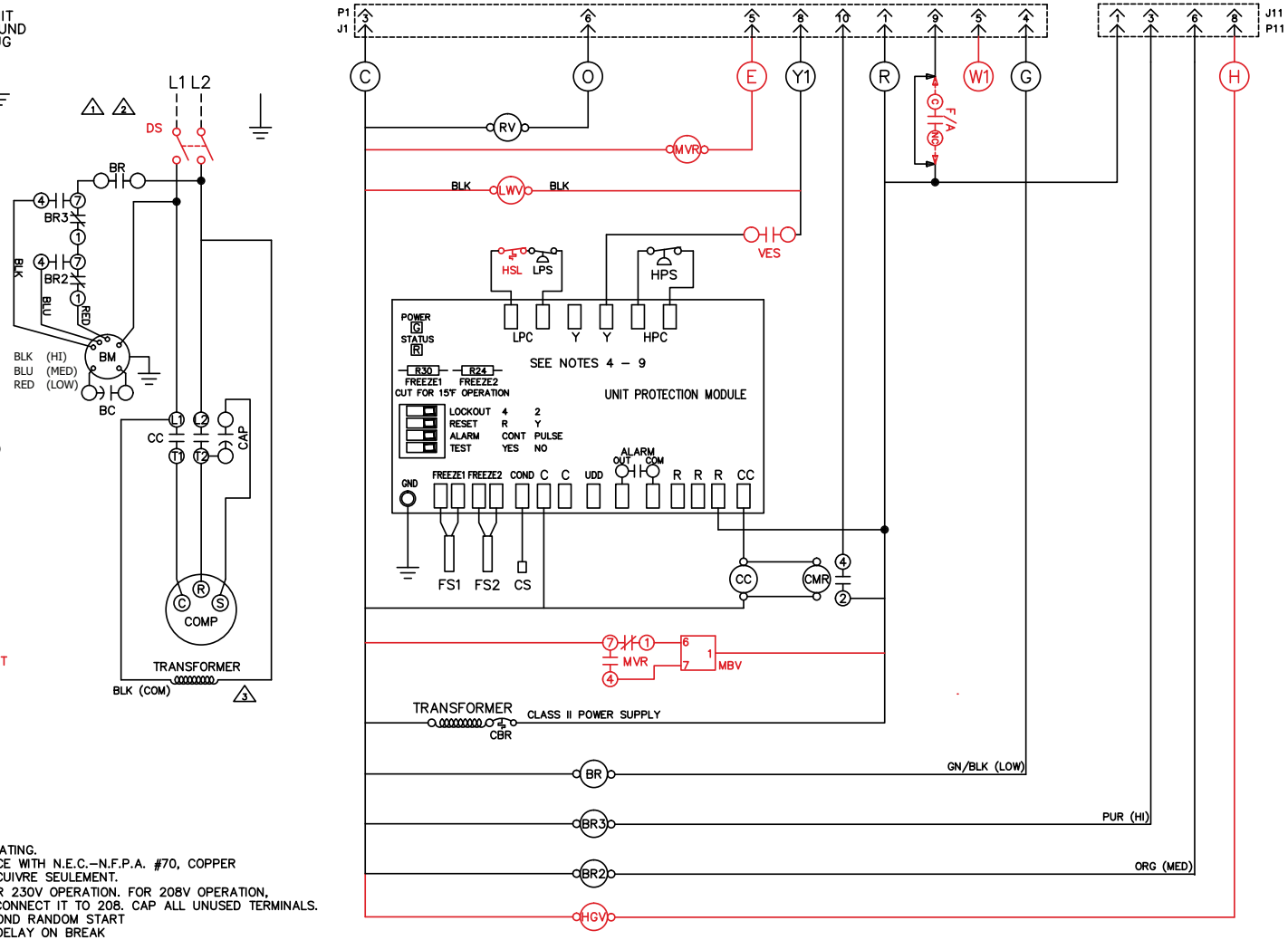

NOTES:
1. SEE UNIT NAME PLATE FOR ELECTRICAL RATING.
2. ALL FIELD WIRING MUST BE IN ACCORDANCE WITH N.E.C.–N.F.P.A. #70, COPPER CONDUCTORS ONLY – CONDUCTEURS EN CUIVRE SEULEMENT.
3. 208/230V UNITS ARE FACTORY WIRED FOR 230V OPERATION. FOR 208V OPERATION, REMOVE LEAD FROM 240 TERMINAL AND CONNECT IT TO 208. CAP ALL UNUSED TERMINALS.
4. UPM–I INCLUDES BUILT IN: 270–300 SECOND RANDOM START
   300 SECOND DELAY ON BREAK
   120 SECOND LOW PRESSURE BYPASS
5. "TEST" DIP SWITCH REDUCES DELAYS TO 10 SEC WHEN SET TO YES. MUST BE SET TO "NO" FOR NORMAL OPERATION.
6. "FREEZE SENSOR" ON CONDENSER WILL OPERATE AT 26°F BY DEFAULT, IF 15°F OPERATION IS REQUIRED JUMPER R30 MUST BE CUT IF FREEZE SENSOR IS NOT INSTALLED A JUMPER SHALL BE INSTALLED BETWEEN THE FREEZE1 OR FREEZE2 SENSOR TERMINALS.
7. "ALARM OUTPUT" DIP SWITCH MUST BE SET TO "PULSE" IF BLINKING T–STAT SERVICE LIGHT IS DESIRED.
8. DEFAULT SETTINGS FOR UPM BOARD FROM FACTORY SHOWN. ALSO SEE INSTALLATION MANUAL.
9. ALARM OUTPUT IS NORMALLY OPEN (NO) DRY CONTACT. IF 24 VAC IS NEEDED, CONNECT R TO ALR–COM TERMINAL, 24VAC WILL BE SENSED ON THE ALR–OUT WHEN THE UNIT IS IN ALARM CONDITION. OUTPUT WILL BE PULSED IF PULSE IS SELECTED.

50PC111016 Rev. 3

Fig. 13 — PSC Motor, Single Phase/Single Stage, WSHP Open Control

UPM STATUS LED - BLINK CODES	
1	HIGH PRESSURE FAULT
2	LOW PRESSURE FAULT
3	CONDENSER FREEZE CONDITION
4	CONDENSATE OVERFLOW FAULT
5	BROWN OUT FAULT
6	EVAPORATOR FREEZE CONDITION

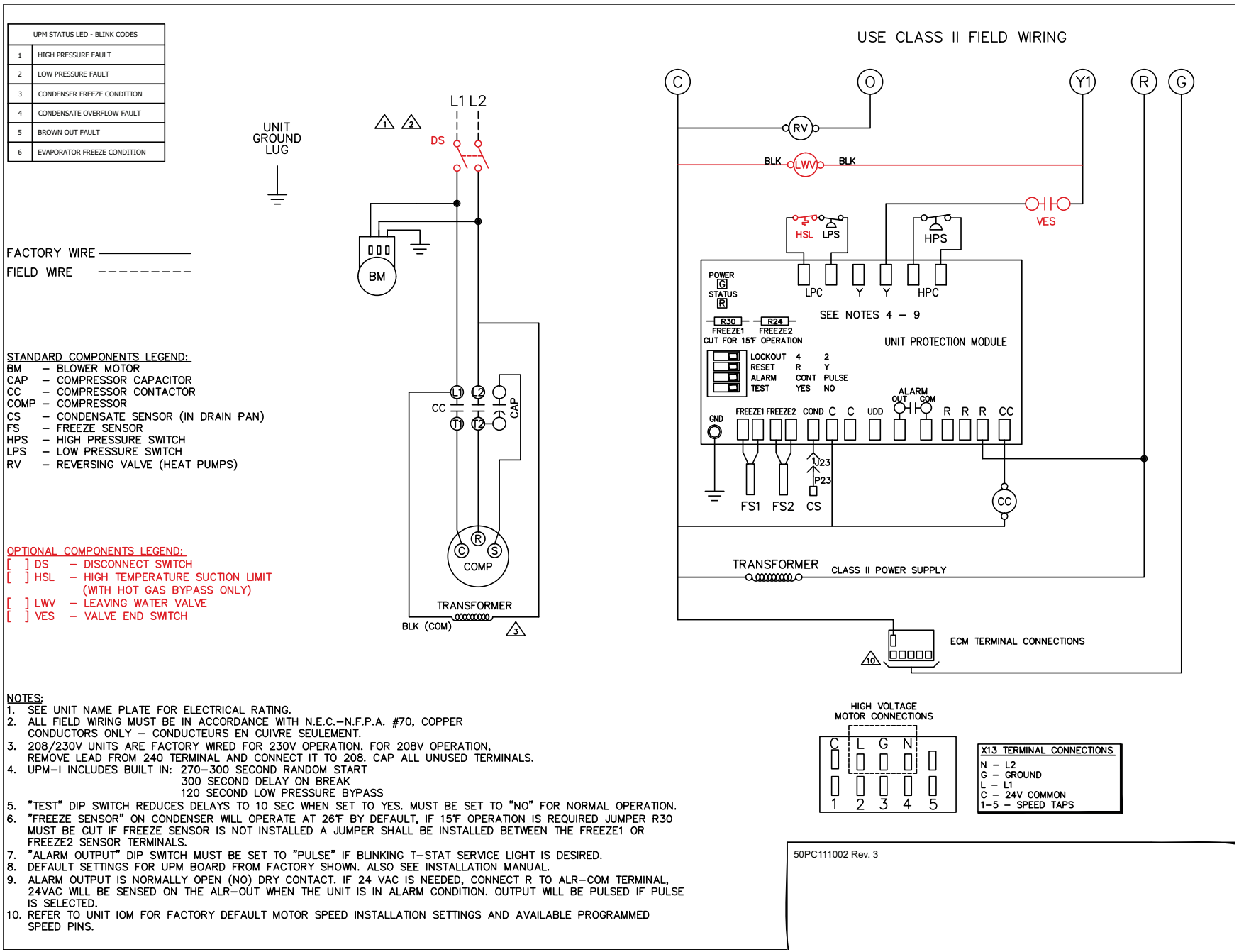

STANDARD COMPONENTS LEGEND:

BM – BLOWER MOTOR
CAP – COMPRESSOR CAPACITOR
CC – COMPRESSOR CONTACTOR
COMP – COMPRESSOR
CS – CONDENSATE SENSOR (IN DRAIN PAN)
FS – FREEZE SENSOR
HPS – HIGH PRESSURE SWITCH
LPS – LOW PRESSURE SWITCH
RV – REVERSING VALVE (HEAT PUMPS)

OPTIONAL COMPONENTS LEGEND:

[ ] DS – DISCONNECT SWITCH
[ ] HSL – HIGH TEMPERATURE SUCTION LIMIT (WITH HOT GAS BYPASS ONLY)
[ ] LWV – LEAVING WATER VALVE
[ ] VES – VALVE END SWITCH

NOTES:

1. SEE UNIT NAME PLATE FOR ELECTRICAL RATING.
2. ALL FIELD WIRING MUST BE IN ACCORDANCE WITH N.E.C.–N.F.P.A. #70, COPPER CONDUCTORS ONLY – CONDUCTEURS EN CUIVRE SEULEMENT.
3. 208/230V UNITS ARE FACTORY WIRED FOR 230V OPERATION. FOR 208V OPERATION, REMOVE LEAD FROM 240 TERMINAL AND CONNECT IT TO 208. CAP ALL UNUSED TERMINALS.
4. UPM–I INCLUDES BUILT IN: 270–300 SECOND RANDOM START
   300 SECOND DELAY ON BREAK
   120 SECOND LOW PRESSURE BYPASS
5. "TEST" DIP SWITCH REDUCES DELAYS TO 10 SEC WHEN SET TO YES. MUST BE SET TO "NO" FOR NORMAL OPERATION.
6. "FREEZE SENSOR" ON CONDENSER WILL OPERATE AT 26°F BY DEFAULT, IF 15°F OPERATION IS REQUIRED JUMPER R30 MUST BE CUT IF FREEZE SENSOR IS NOT INSTALLED A JUMPER SHALL BE INSTALLED BETWEEN THE FREEZE1 OR FREEZE2 SENSOR TERMINALS.
7. "ALARM OUTPUT" DIP SWITCH MUST BE SET TO "PULSE" IF BLINKING T–STAT SERVICE LIGHT IS DESIRED.
8. DEFAULT SETTINGS FOR UPM BOARD FROM FACTORY SHOWN. ALSO SEE INSTALLATION MANUAL.
9. ALARM OUTPUT IS NORMALLY OPEN (NO) DRY CONTACT. IF 24 VAC IS NEEDED, CONNECT R TO ALR–COM TERMINAL, 24VAC WILL BE SENSED ON THE ALR–OUT WHEN THE UNIT IS IN ALARM CONDITION. OUTPUT WILL BE PULSED IF PULSE IS SELECTED.
10. REFER TO UNIT IOM FOR FACTORY DEFAULT MOTOR SPEED INSTALLATION SETTINGS AND AVAILABLE PROGRAMMED SPEED PINS.

Fig. 14 — Constant Torque Motor, Single Phase/Single Stage, Better B or Complete C Control

UPM STATUS LED - BLINK CODES	
1	HIGH PRESSURE FAULT
2	LOW PRESSURE FAULT
3	CONDENSER FREEZE CONDITION
4	CONDENSATE OVERFLOW FAULT
5	BROWN OUT FAULT
6	EVAPORATOR FREEZE CONDITION

FACTORY WIRE ————————

FIELD WIRE - - - - - - - - -

STANDARD COMPONENTS LEGEND:

AUX – AUXILIARY RELAY (FOR LOOP PUMP, ETC)
BCA – BOILERLESS CONTROL AQUASTAT
BM – BLOWER MOTOR
CBR – 24V CIRCUIT BREAKER
COMP – COMPRESSOR
CAP – COMPRESSOR CAPACITOR
CC – COMPRESSOR CONTACTOR
CS – CONDENSATE SENSOR (IN DRAIN PAN)
EMS – ENERGY MGMT SYSTEM RELAY
FS – FREEZE SENSOR
HCR – HEATING/COOLING RELAY
HPS – HIGH PRESSURE SWITCH
LED – UNIT STATUS LED
LP – LOOP PUMP (FIELD INSTALLED)
LPS – LOW PRESSURE SWITCH
RV – REVERSING VALVE (HEAT PUMPS)

OPTIONAL COMPONENTS LEGEND:

[ ] DS – DISCONNECT SWITCH
[ ] HGV – HOT GAS VALVE SOLENOID (WITH HGRH AND DDC ONLY)
[ ] HSL – HIGH TEMPERATURE SUCTION LIMIT (WITH HOT GAS BYPASS ONLY)
[ ] LWV – LEAVING WATER VALVE
[ ] VES – VALVE END SWITCH

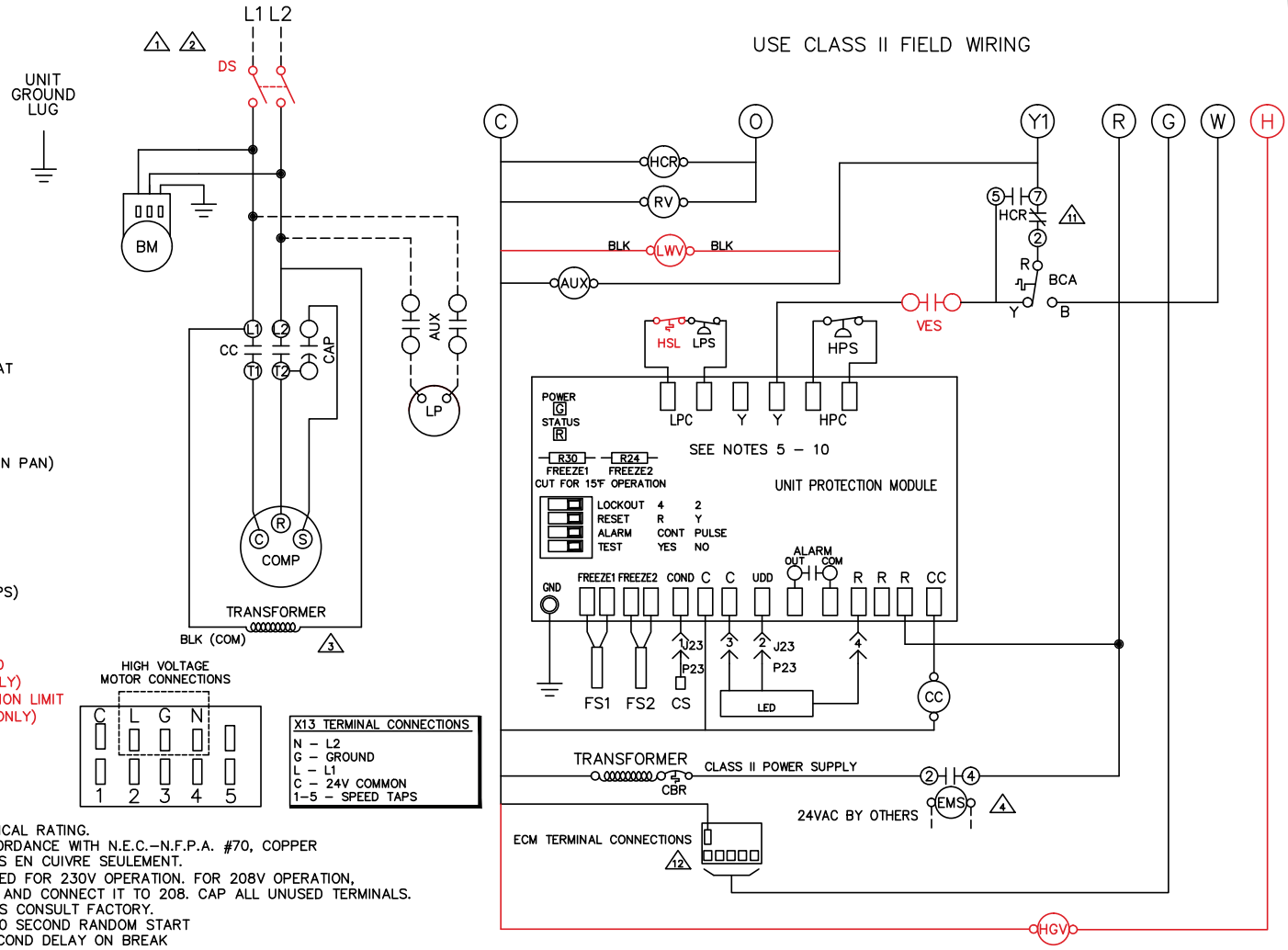

NOTES:

1. SEE UNIT NAME PLATE FOR ELECTRICAL RATING.
2. ALL FIELD WIRING MUST BE IN ACCORDANCE WITH N.E.C.–N.F.P.A. #70, COPPER CONDUCTORS ONLY – CONDUCTEURS EN CUIVRE SEULEMENT.
3. 208/230V UNITS ARE FACTORY WIRED FOR 230V OPERATION. FOR 208V OPERATION, REMOVE LEAD FROM 240 TERMINAL AND CONNECT IT TO 208. CAP ALL UNUSED TERMINALS.
4. FOR ALTERNATE EMS COIL VOLTAGES CONSULT FACTORY.
5. UPM–I INCLUDES BUILT IN: 270–300 SECOND RANDOM START
   300 SECOND DELAY ON BREAK
   120 SECOND LOW PRESSURE BYPASS
6. "TEST" DIP SWITCH REDUCES DELAYS TO 10 SEC WHEN SET TO YES. MUST BE SET TO "NO" FOR NORMAL OPERATION.
7. "FREEZE SENSOR" ON CONDENSER WILL OPERATE AT 26°F BY DEFAULT, IF 15°F OPERATION IS REQUIRED JUMPER R30 MUST BE CUT IF FREEZE SENSOR IS NOT INSTALLED A JUMPER SHALL BE INSTALLED BETWEEN THE FREEZE1 OR FREEZE2 SENSOR TERMINALS.
8. "ALARM OUTPUT" DIP SWITCH MUST BE SET TO "PULSE" IF BLINKING T–STAT SERVICE LIGHT IS DESIRED.
9. DEFAULT SETTINGS FOR UPM BOARD FROM FACTORY SHOWN. ALSO SEE INSTALLATION MANUAL.
10. ALARM OUTPUT IS NORMALLY OPEN (NO) DRY CONTACT. IF 24 VAC IS NEEDED, CONNECT R TO ALR–COM TERMINAL, 24VAC WILL BE SENSED ON THE ALR–OUT WHEN THE UNIT IS IN ALARM CONDITION. OUTPUT WILL BE PULSED IF PULSE IS SELECTED.
11. BCA CONTACTS R–Y OPEN ON DROP IN WATER TEMPERATURE AND R–B CLOSE.
12. REFER TO UNIT IOM FOR FACTORY DEFAULT MOTOR SPEED INSTALLATION SETTINGS AND AVAILABLE PROGRAMMED SPEED PINS.

50PC111003 Rev. 6

Fig. 15 — Constant Torque Motor, Single Phase/Single Stage, Deluxe D Control

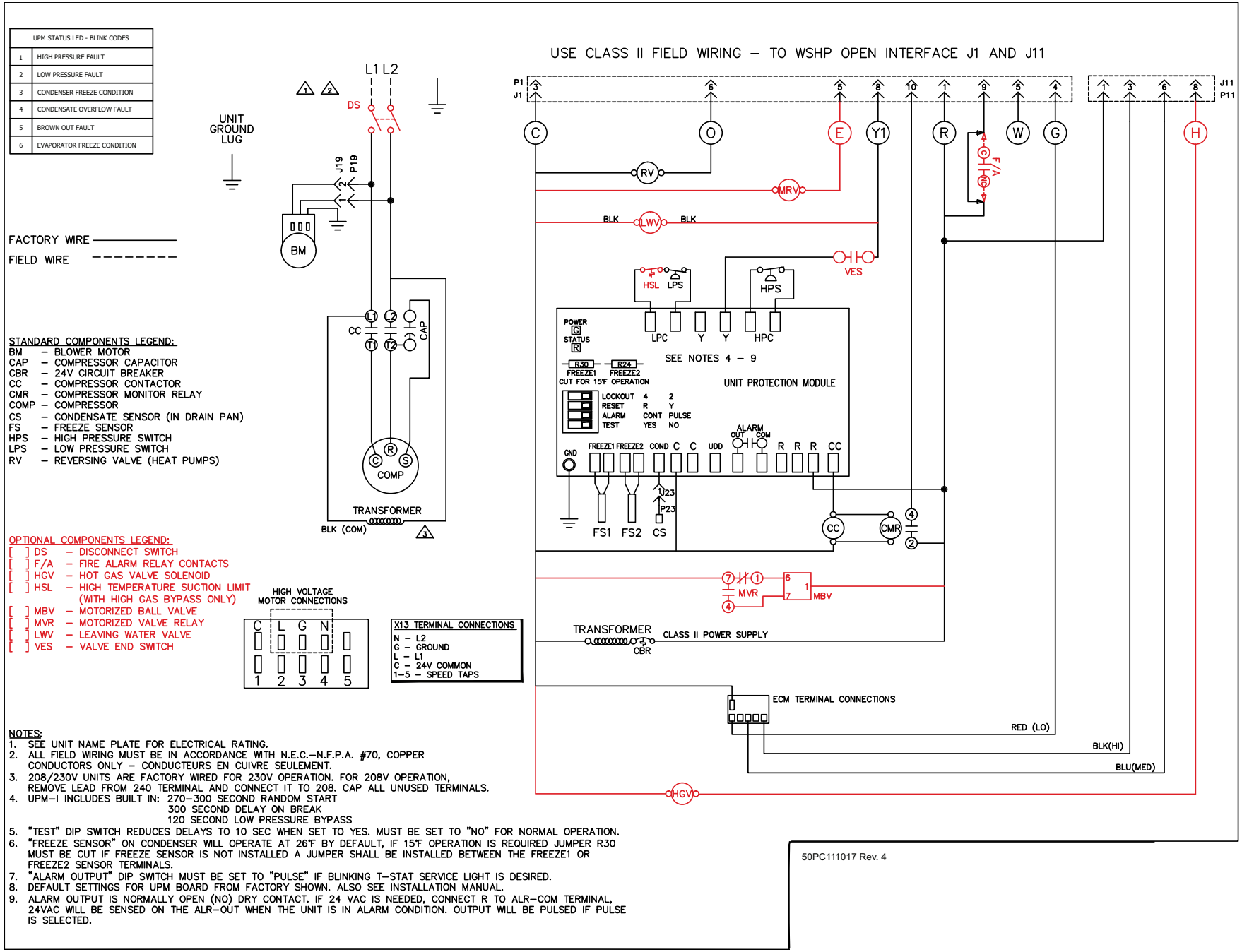

STANDARD COMPONENTS LEGEND:
BM – BLOWER MOTOR
CAP – COMPRESSOR CAPACITOR
CBR – 24V CIRCUIT BREAKER
CC – COMPRESSOR CONTACTOR
CMR – COMPRESSOR MONITOR RELAY
COMP – COMPRESSOR
CS – CONDENSATE SENSOR (IN DRAIN PAN)
FS – FREEZE SENSOR
HPS – HIGH PRESSURE SWITCH
LPS – LOW PRESSURE SWITCH
RV – REVERSING VALVE (HEAT PUMPS)

OPTIONAL COMPONENTS LEGEND:
[ ] DS – DISCONNECT SWITCH
[ ] F/A – FIRE ALARM RELAY CONTACTS
[ ] HGV – HOT GAS VALVE SOLENOID
[ ] HSL – HIGH TEMPERATURE SUCTION LIMIT (WITH HIGH GAS BYPASS ONLY)
[ ] MBV – MOTORIZED BALL VALVE
[ ] MVR – MOTORIZED VALVE RELAY
[ ] LWV – LEAVING WATER VALVE
[ ] VES – VALVE END SWITCH

NOTES:
1. SEE UNIT NAME PLATE FOR ELECTRICAL RATING.
2. ALL FIELD WIRING MUST BE IN ACCORDANCE WITH N.E.C.–N.F.P.A. #70, COPPER CONDUCTORS ONLY – CONDUCTEURS EN CUIVRE SEULEMENT.
3. 208/230V UNITS ARE FACTORY WIRED FOR 230V OPERATION. FOR 208V OPERATION, REMOVE LEAD FROM 240 TERMINAL AND CONNECT IT TO 208. CAP ALL UNUSED TERMINALS.
4. UPM–I INCLUDES BUILT IN: 270–300 SECOND RANDOM START
   300 SECOND DELAY ON BREAK
   120 SECOND LOW PRESSURE BYPASS
5. "TEST" DIP SWITCH REDUCES DELAYS TO 10 SEC WHEN SET TO YES. MUST BE SET TO "NO" FOR NORMAL OPERATION.
6. "FREEZE SENSOR" ON CONDENSER WILL OPERATE AT 26°F BY DEFAULT, IF 15°F OPERATION IS REQUIRED JUMPER R30 MUST BE CUT IF FREEZE SENSOR IS NOT INSTALLED A JUMPER SHALL BE INSTALLED BETWEEN THE FREEZE1 OR FREEZE2 SENSOR TERMINALS.
7. "ALARM OUTPUT" DIP SWITCH MUST BE SET TO "PULSE" IF BLINKING T–STAT SERVICE LIGHT IS DESIRED.
8. DEFAULT SETTINGS FOR UPM BOARD FROM FACTORY SHOWN. ALSO SEE INSTALLATION MANUAL.
9. ALARM OUTPUT IS NORMALLY OPEN (NO) DRY CONTACT. IF 24 VAC IS NEEDED, CONNECT R TO ALR–COM TERMINAL, 24VAC WILL BE SENSED ON THE ALR–OUT WHEN THE UNIT IS IN ALARM CONDITION. OUTPUT WILL BE PULSED IF PULSE IS SELECTED.

Fig. 16 — Constant Torque Motor, Single Phase, Single Stage, WSHP Open Control

UPM STATUS LED - BLINK CODES	
1	HIGH PRESSURE FAULT
2	LOW PRESSURE FAULT
3	CONDENSER FREEZE CONDITION
4	CONDENSATE OVERFLOW FAULT
5	BROWN OUT FAULT
6	EVAPORATOR FREEZE CONDITION

FACTORY WIRE ————————

FIELD WIRE - - - - - - - - -

STANDARD COMPONENTS LEGEND:

BM – BLOWER MOTOR
CAP – COMPRESSOR CAPACITOR
CBR – 24V CIRCUIT BREAKER
CC – COMPRESSOR CONTACTOR
COMP – COMPRESSOR
CS – CONDENSATE SENSOR (IN DRAIN PAN)
FS – FREEZE SENSOR
HPS – HIGH PRESSURE SWITCH
LPS – LOW PRESSURE SWITCH
RV – REVERSING VALVE (HEAT PUMPS)

OPTIONAL COMPONENTS LEGEND:

[ ] DS – DISCONNECT SWITCH
[ ] HSL – HIGH TEMPERATURE SUCTION LIMIT (WITH HOT GAS BYPASS ONLY)
[ ] OLR – OVERLOAD RELAY
[ ] LWV – LEAVING WATER VALVE
[ ] VES – VALVE END SWITCH

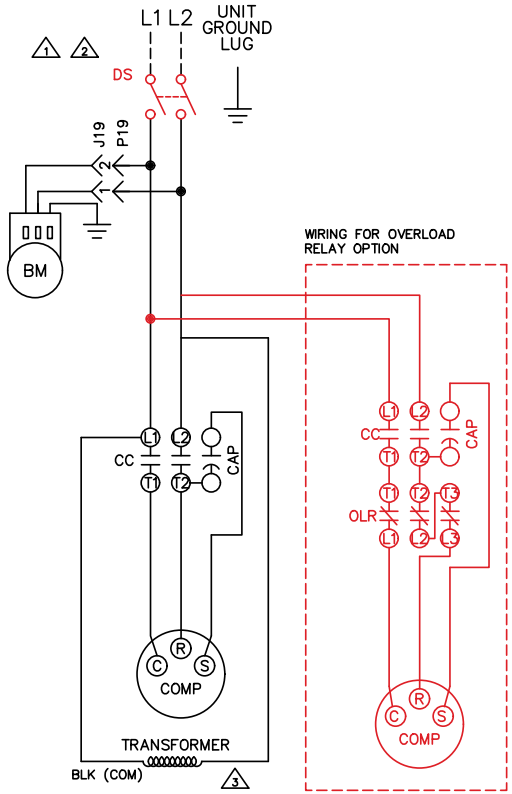

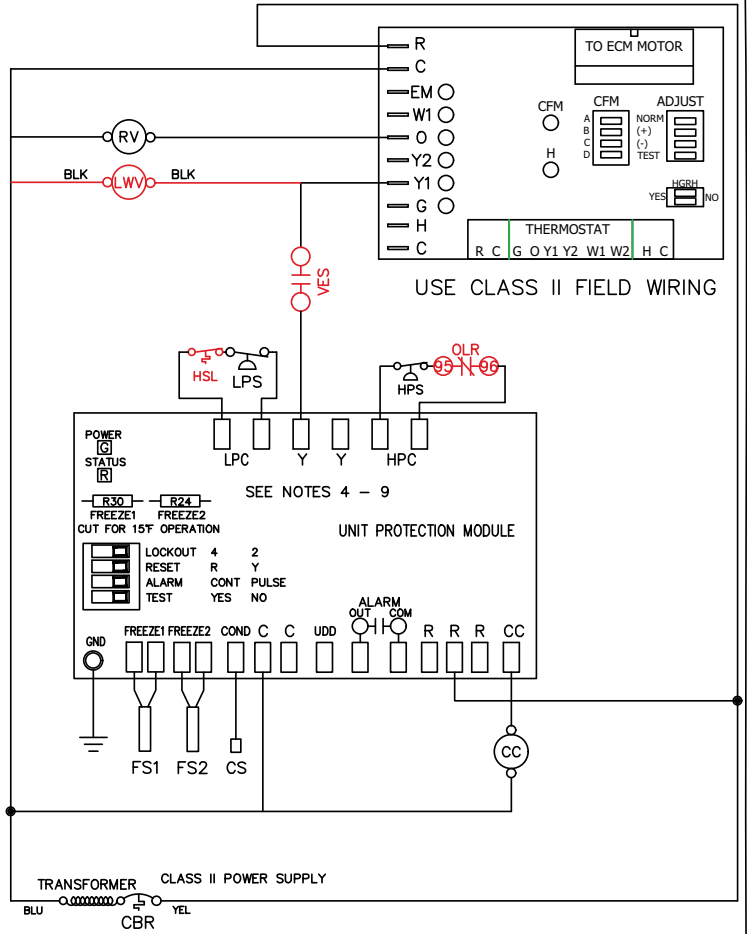

NOTES:

1. SEE UNIT NAME PLATE FOR ELECTRICAL RATING.
2. ALL FIELD WIRING MUST BE IN ACCORDANCE WITH N.E.C.–N.F.P.A. #70, COPPER CONDUCTORS ONLY – CONDUCTEURS EN CUIVRE SEULEMENT.
3. 208/230V UNITS ARE FACTORY WIRED FOR 230V OPERATION. FOR 208V OPERATION, REMOVE LEAD FROM 240 TERMINAL AND CONNECT IT TO 208. CAP ALL UNUSED TERMINALS.
4. UPM–I INCLUDES BUILT IN: 270–300 SECOND RANDOM START
   300 SECOND DELAY ON BREAK
   120 SECOND LOW PRESSURE BYPASS
5. "TEST" DIP SWITCH REDUCES DELAYS TO 10 SEC WHEN SET TO YES. MUST BE SET TO "NO" FOR NORMAL OPERATION.
6. "FREEZE SENSOR" ON CONDENSER WILL OPERATE AT 26°F BY DEFAULT, IF 15°F OPERATION IS REQUIRED JUMPER R30 MUST BE CUT IF FREEZE SENSOR IS NOT INSTALLED A JUMPER SHALL BE INSTALLED BETWEEN THE FREEZE1 OR FREEZE2 SENSOR TERMINALS.
7. "ALARM OUTPUT" DIP SWITCH MUST BE SET TO "PULSE" IF BLINKING T–STAT SERVICE LIGHT IS DESIRED.
8. DEFAULT SETTINGS FOR UPM BOARD FROM FACTORY SHOWN. ALSO SEE INSTALLATION MANUAL.
9. ALARM OUTPUT IS NORMALLY OPEN (NO) DRY CONTACT. IF 24 VAC IS NEEDED, CONNECT R TO ALR–COM TERMINAL, 24VAC WILL BE SENSED ON THE ALR–OUT WHEN THE UNIT IS IN ALARM CONDITION. OUTPUT WILL BE PULSED IF PULSE IS SELECTED.

50PC111026 Rev. 1

Fig. 17 — Constant Airflow Motor, Single Phase/Single Stage, Complete C, Better B Control

UPM STATUS LED - BLINK CODES	
1	HIGH PRESSURE FAULT
2	LOW PRESSURE FAULT
3	CONDENSER FREEZE CONDITION
4	CONDENSATE OVERFLOW FAULT
5	BROWN OUT FAULT
6	EVAPORATOR FREEZE CONDITION

FACTORY WIRE ————————

FIELD WIRE - - - - - - - - - -

STANDARD COMPONENTS LEGEND:

AUX – AUXILIARY RELAY (FOR LOOP PUMP, ETC)
BCA – BOILERLESS CONTROL AQUASTAT
BM – BLOWER MOTOR
CAP – COMPRESSOR CAPACITOR
CBR – 24V CIRCUIT BREAKER
CC – COMPRESSOR CONTACTOR
COMP – COMPRESSOR
CS – CONDENSATE SENSOR (IN DRAIN PAN)
EMS – ENERGY MGMT SYSTEM RELAY
FS – FREEZE SENSOR
HCR – HEATING/COOLING RELAY
HPS – HIGH PRESSURE SWITCH
LP – LOOP PUMP (FIELD INSTALLED)
LPS – LOW PRESSURE SWITCH
RV – REVERSING VALVE (HEAT PUMPS)

OPTIONAL COMPONENTS LEGEND:

[ ] DS – DISCONNECT SWITCH
[ ] HSL – HIGH TEMPERATURE SUCTION LIMIT (WITH HOT GAS BYPASS ONLY)
[ ] OLR – OVERLOAD RELAY
[ ] LWV – LEAVING WATER VALVE
[ ] VES – VALVE END SWITCH

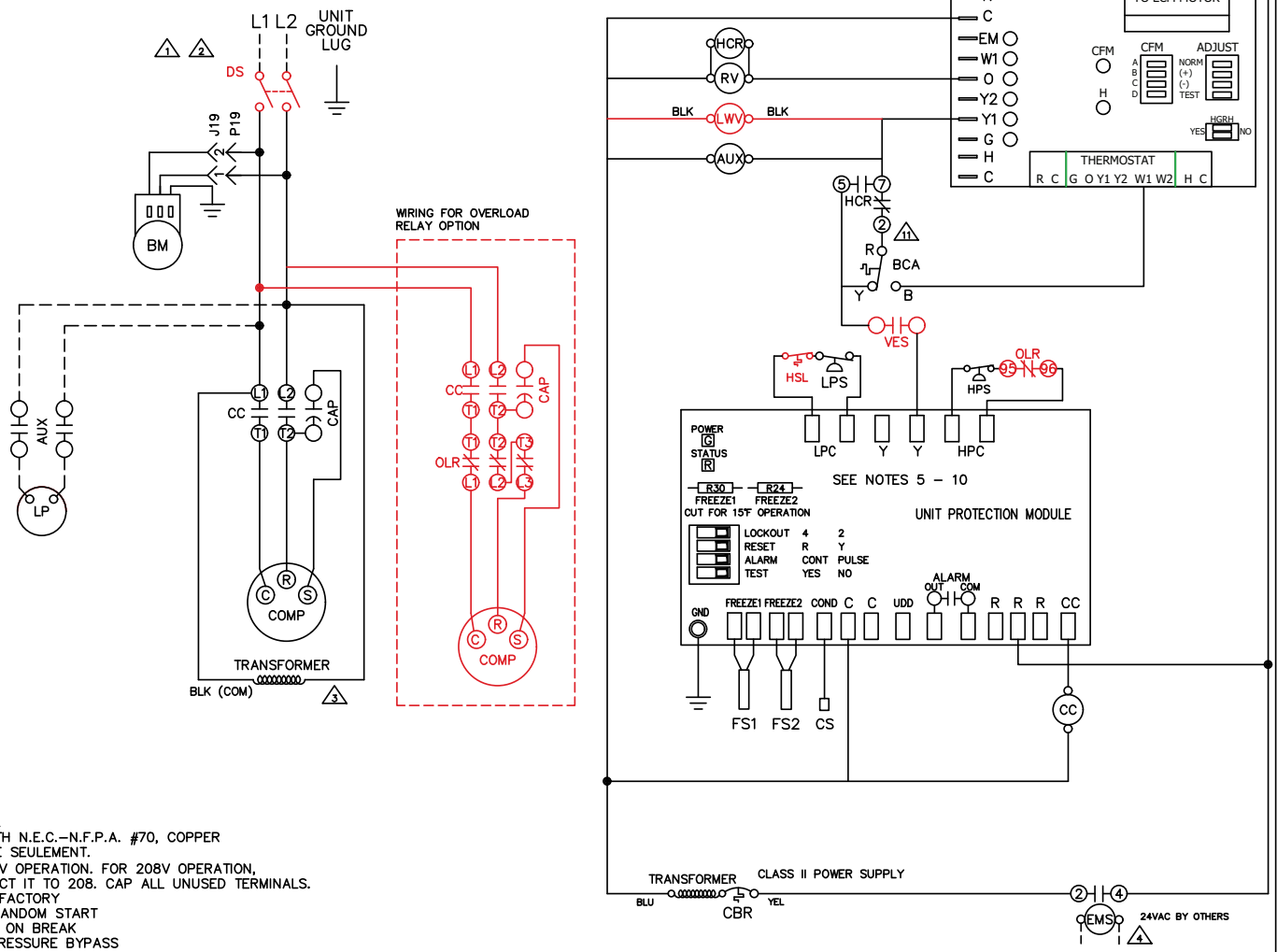

NOTES:

1. SEE UNIT NAME PLATE FOR ELECTRICAL RATING.
2. ALL FIELD WIRING MUST BE IN ACCORDANCE WITH N.E.C.–N.F.P.A. #70, COPPER CONDUCTORS ONLY – CONDUCTEURS EN CUIVRE SEULEMENT.
3. 208/230V UNITS ARE FACTORY WIRED FOR 230V OPERATION. FOR 208V OPERATION, REMOVE LEAD FROM 240 TERMINAL AND CONNECT IT TO 208. CAP ALL UNUSED TERMINALS.
4. FOR ALTERNATE EMS COIL VOLTAGES CONSULT FACTORY
5. UPM–I INCLUDES BUILT IN: 270–300 SECOND RANDOM START
   300 SECOND DELAY ON BREAK
   120 SECOND LOW PRESSURE BYPASS
6. "TEST" DIP SWITCH REDUCES DELAYS TO 10 SEC WHEN SET TO YES. MUST BE SET TO "NO" FOR NORMAL OPERATION.
7. "FREEZE SENSOR" ON CONDENSER WILL OPERATE AT 26°F BY DEFAULT, IF 15°F OPERATION IS REQUIRED JUMPER R30 MUST BE CUT IF FREEZE SENSOR IS NOT INSTALLED A JUMPER SHALL BE INSTALLED BETWEEN THE FREEZE1 OR FREEZE2 SENSOR TERMINALS.
8. "ALARM OUTPUT" DIP SWITCH MUST BE SET TO "PULSE" IF BLINKING T–STAT SERVICE LIGHT IS DESIRED.
9. DEFAULT SETTINGS FOR UPM BOARD FROM FACTORY SHOWN. ALSO SEE INSTALLATION MANUAL.
10. ALARM OUTPUT IS NORMALLY OPEN (NO) DRY CONTACT. IF 24 VAC IS NEEDED, CONNECT R TO ALR–COM TERMINAL, 24VAC WILL BE SENSED ON THE ALR–OUT WHEN THE UNIT IS IN ALARM CONDITION. OUTPUT WILL BE PULSED IF PULSE IS SELECTED.
11. BCA CONTACTS R–Y OPEN ON DROP IN WATER TEMPERATURE AND R–B CLOSE.

50PC111027 Rev. 1

Fig. 18 — Constant Airflow Motor, Single Phase/Single Stage, Deluxe D Control

UPM STATUS LED - BLINK CODES	
1	HIGH PRESSURE FAULT
2	LOW PRESSURE FAULT
3	CONDENSER FREEZE CONDITION
4	CONDENSATE OVERFLOW FAULT
5	BROWN OUT FAULT
6	EVAPORATOR FREEZE CONDITION

FACTORY WIRE ————————

FIELD WIRE - - - - - - - - - -

STANDARD COMPONENTS LEGEND:
BM – BLOWER MOTOR
CAP – COMPRESSOR CAPACITOR
CBR – 24V CIRCUIT BREAKER
CC – COMPRESSOR CONTACTOR
CMR – COMPRESSOR MONITOR RELAY
COMP – COMPRESSOR
CS – CONDENSATE SENSOR (IN DRAIN PAN)
FS – FREEZE SENSOR
HPS – HIGH PRESSURE SWITCH
LPS – LOW PRESSURE SWITCH
RV – REVERSING VALVE (HEAT PUMPS)

OPTIONAL COMPONENTS LEGEND:
[ ] DS – DISCONNECT SWITCH
[ ] HSL – HIGH TEMPERATURE SUCTION LIMIT (WITH HOT GAS BYPASS ONLY)
[ ] LWV – LEAVING WATER VALVE
[ ] MBV – MOTORIZED BALL VALVE
[ ] MVR – MOTORIZED VALVE RELAY
[ ] OLR – OVERLOAD RELAY
[ ] VES – VALVE END SWITCH
[ ] Y2S – 2ND STEP SOLENOID

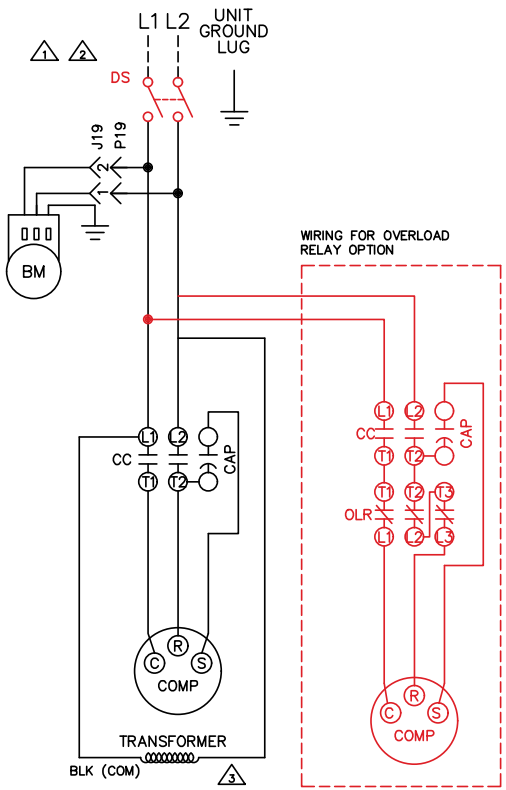

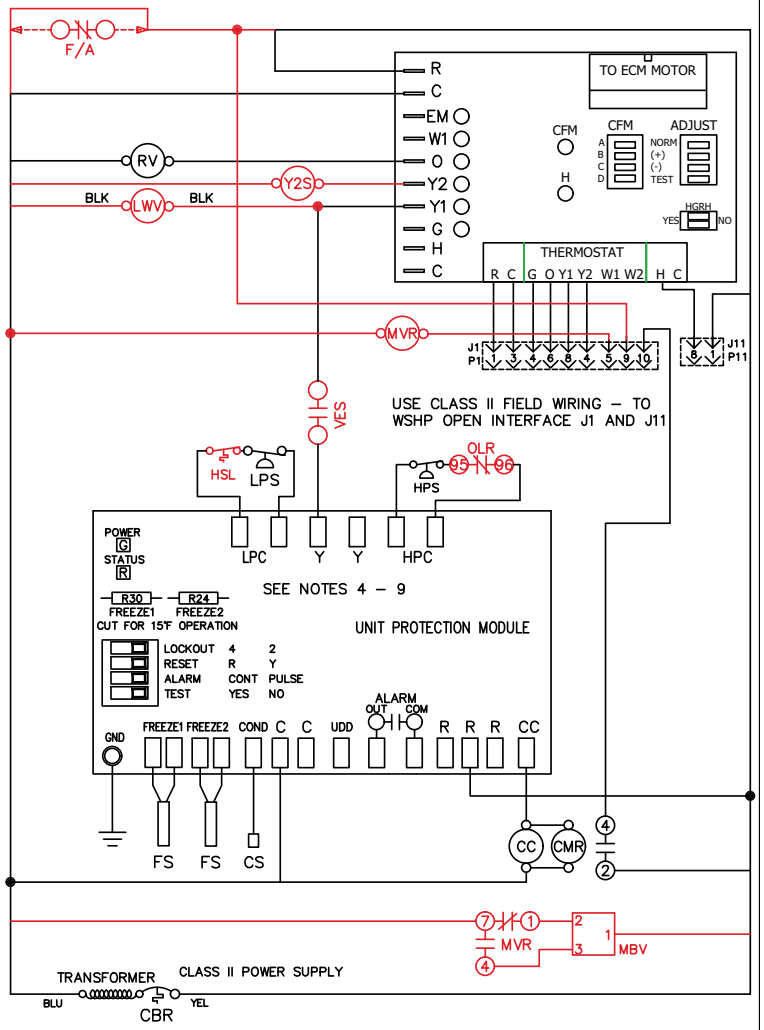

NOTES:
1. SEE UNIT NAME PLATE FOR ELECTRICAL RATING.
2. ALL FIELD WIRING MUST BE IN ACCORDANCE WITH N.E.C.–N.F.P.A. #70, COPPER CONDUCTORS ONLY – CONDUCTEURS EN CUIVRE SEULEMENT.
3. 208/230V UNITS ARE FACTORY WIRED FOR 230V OPERATION. FOR 208V OPERATION, REMOVE LEAD FROM 240 TERMINAL AND CONNECT IT TO 208. CAP ALL UNUSED TERMINALS.
4. UPM–I INCLUDES BUILT IN: 270–300 SECOND RANDOM START
   300 SECOND DELAY ON BREAK
   120 SECOND LOW PRESSURE BYPASS
5. "TEST" DIP SWITCH REDUCES DELAYS TO 10 SEC WHEN SET TO YES. MUST BE SET TO "NO" FOR NORMAL OPERATION.
6. "FREEZE SENSOR" ON CONDENSER WILL OPERATE AT 26°F BY DEFAULT, IF 15°F OPERATION IS REQUIRED JUMPER R30 MUST BE CUT IF FREEZE SENSOR IS NOT INSTALLED A JUMPER SHALL BE INSTALLED BETWEEN THE FREEZE1 OR FREEZE2 SENSOR TERMINALS.
7. "ALARM OUTPUT" DIP SWITCH MUST BE SET TO "PULSE" IF BLINKING T–STAT SERVICE LIGHT IS DESIRED.
8. DEFAULT SETTINGS FOR UPM BOARD FROM FACTORY SHOWN. ALSO SEE INSTALLATION MANUAL.
9. ALARM OUTPUT IS NORMALLY OPEN (NO) DRY CONTACT. IF 24 VAC IS NEEDED, CONNECT R TO ALR–COM TERMINAL, 24VAC WILL BE SENSED ON THE ALR–OUT WHEN THE UNIT IS IN ALARM CONDITION. OUTPUT WILL BE PULSED IF PULSE IS SELECTED.

50PC111028 Rev. 1

Fig. 19 — Constant Airflow Motor, Single Phase/Single Stage, WSHP Open Control

UPM STATUS LED - BLINK CODES	
1	HIGH PRESSURE FAULT
2	LOW PRESSURE FAULT
3	CONDENSER FREEZE CONDITION
4	CONDENSATE OVERFLOW FAULT
5	BROWN OUT FAULT
6	EVAPORATOR FREEZE CONDITION

FACTORY WIRE ————————

FIELD WIRE - - - - - - - - -

STANDARD COMPONENTS LEGEND:
BC – BLOWER MOTOR CAPACITOR
BM – BLOWER MOTOR
BR – BLOWER RELAY
CC – COMPRESSOR CONTACTOR
COMP – COMPRESSOR
CS – CONDENSATE SENSOR (IN DRAIN PAN)
FS – FREEZE SENSOR
HPS – HIGH PRESSURE SWITCH
LPS – LOW PRESSURE SWITCH
RV – REVERSING VALVE (HEAT PUMPS)

OPTIONAL COMPONENTS LEGEND:
[ ] DS – DISCONNECT SWITCH
[ ] HSL – HIGH TEMPERATURE SUCTION LIMIT (WITH HOT GAS BYPASS ONLY)
[ ] LED – UNIT STATUS LED
[ ] LWV – LEAVING WATER VALVE
[ ] VES – VALVE END SWITCH

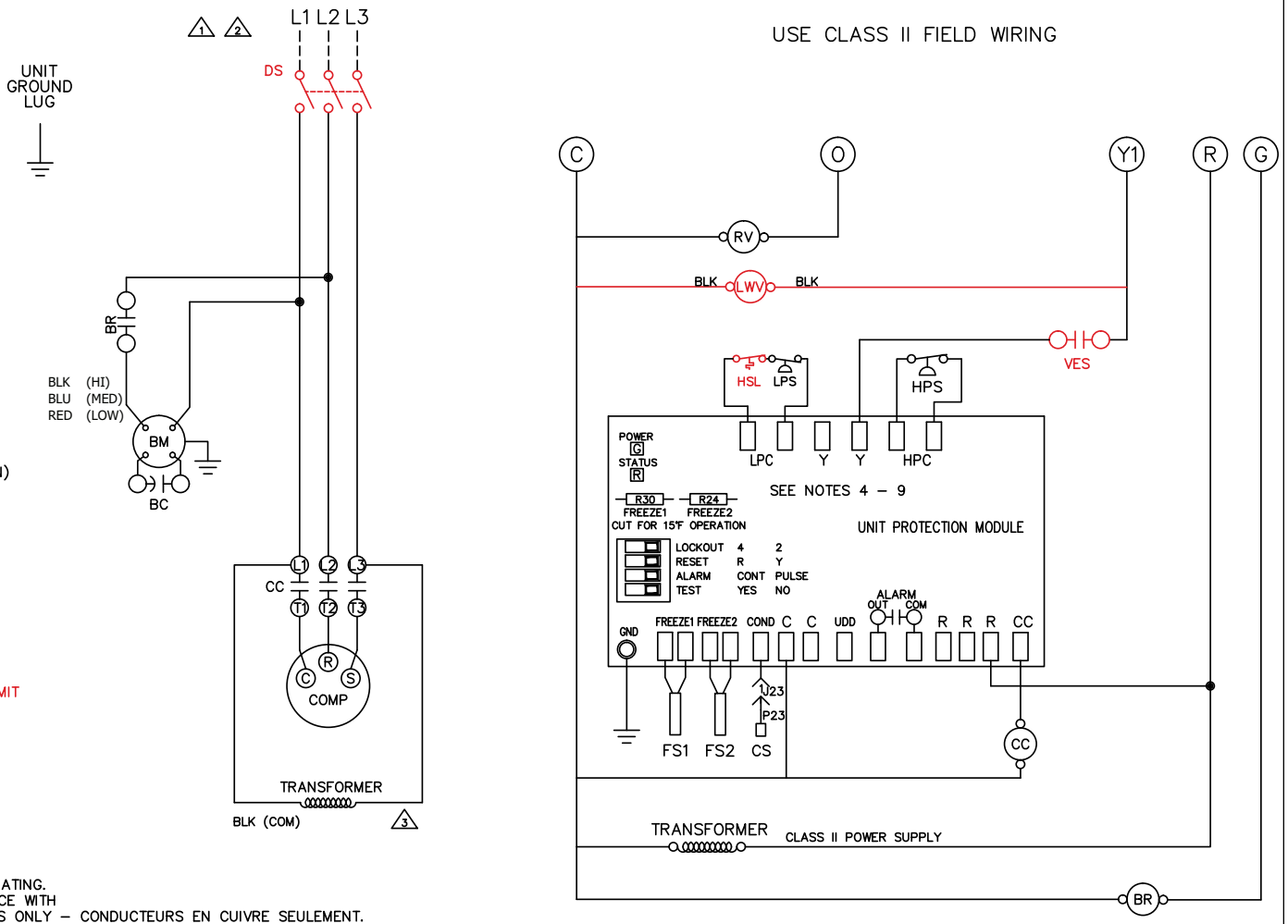

NOTES:
1. SEE UNIT NAME PLATE FOR ELECTRICAL RATING.
2. ALL FIELD WIRING MUST BE IN ACCORDANCE WITH N.E.C.–N.F.P.A. #70, COPPER CONDUCTORS ONLY – CONDUCTEURS EN CUIVRE SEULEMENT.
3. 208/230V UNITS ARE FACTORY WIRED FOR 230V OPERATION. FOR 208V OPERATION, REMOVE ORG LEAD AND CONNECT IT ON 208 LABELED TERMINAL. CAP ALL UNUSED TERMINALS.
4. UPM–I INCLUDES BUILT IN: 270–300 SECOND RANDOM START
   300 SECOND DELAY ON BREAK
   120 SECOND LOW PRESSURE BYPASS
5. "TEST" DIP SWITCH REDUCES DELAYS TO 10 SEC WHEN SET TO YES. MUST BE SET TO "NO" FOR NORMAL OPERATION.
6. "FREEZE SENSOR" ON CONDENSER WILL OPERATE AT 26°F BY DEFAULT, IF 15°F OPERATION IS REQUIRED JUMPER R30 MUST BE CUT IF FREEZE SENSOR IS NOT INSTALLED A JUMPER SHALL BE INSTALLED BETWEEN THE FREEZE1 OR FREEZE2 SENSOR TERMINALS.
7. "ALARM OUTPUT" DIP SWITCH MUST BE SET TO "PULSE" IF BLINKING T–STAT SERVICE LIGHT IS DESIRED.
8. DEFAULT SETTINGS FOR UPM BOARD FROM FACTORY SHOWN. ALSO SEE INSTALLATION MANUAL.
9. ALARM OUTPUT IS NORMALLY OPEN (NO) DRY CONTACT. IF 24 VAC IS NEEDED, CONNECT R TO ALR–COM TERMINAL, 24VAC WILL BE SENSED ON THE ALR–OUT WHEN THE UNIT IS IN ALARM CONDITION. OUTPUT WILL BE PULSED IF PULSE IS SELECTED.

50PC311000 Rev. 4

Fig. 20 — PSC Motor, Three Phase/Single Stage, Better B or Complete C Control

UPM STATUS LED - BLINK CODES	
1	HIGH PRESSURE FAULT
2	LOW PRESSURE FAULT
3	CONDENSER FREEZE CONDITION
4	CONDENSATE OVERFLOW FAULT
5	BROWN OUT FAULT
6	EVAPORATOR FREEZE CONDITION

FACTORY WIRE ————————

FIELD WIRE - - - - - - - - -

STANDARD COMPONENTS LEGEND:

AUX – AUXILIARY RELAY (FOR LOOP PUMP, ETC)
BCA – BOILERLESS CONTROL AQUASTAT
BC – BLOWER MOTOR CAPACITOR
BM – BLOWER MOTOR
BR – BLOWER RELAY
CBR – 24V CIRCUIT BREAKER
CC – COMPRESSOR CONTACTOR
COMP – COMPRESSOR
CS – CONDENSATE SENSOR (IN DRAIN PAN)
EMS – ENERGY MGMT SYSTEM RELAY
FS – FREEZE SENSOR
HPS – HIGH PRESSURE SWITCH
HCR – HEATING/COOLING RELAY
LED – UNIT STATUS LED
LPS – LOW PRESSURE SWITCH
LP – LOOP PUMP (FIELD INSTALLED)
PM – PHASE MONITOR
RV – REVERSING VALVE (HEAT PUMPS)

OPTIONAL COMPONENTS LEGEND:

[ ] DS – DISCONNECT SWITCH
[ ] HSL – HIGH TEMPERATURE SUCTION LIMIT (WITH HOT GAS BYPASS ONLY)
[ ] LWV – LEAVING WATER VALVE
[ ] TB2 – MAIN TERMINAL BLOCK (460V UNITS ONLY)
[ ] TB3 – TERMINAL BLOCK DISCONNECT SWITCH (460V UNITS ONLY)
[ ] VES – VALVE END SWITCH

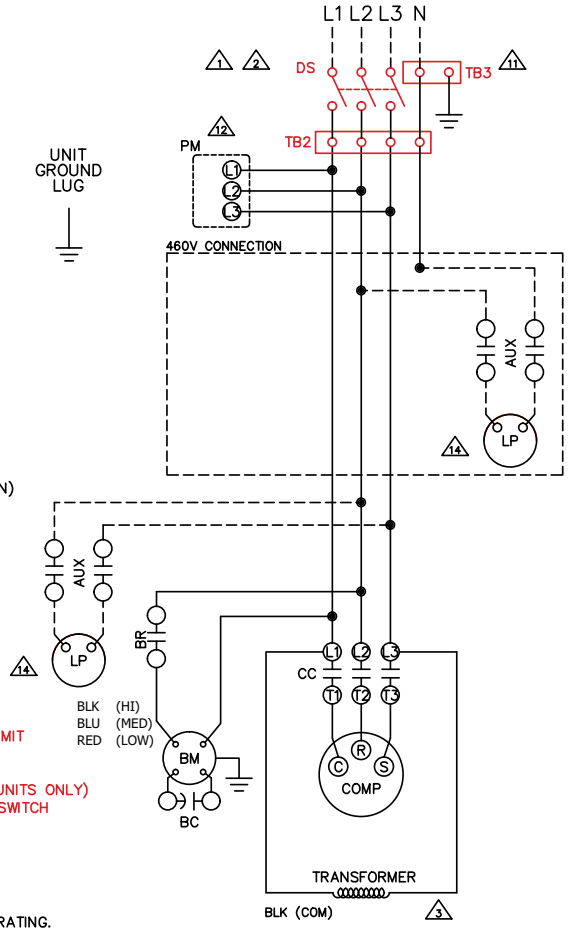

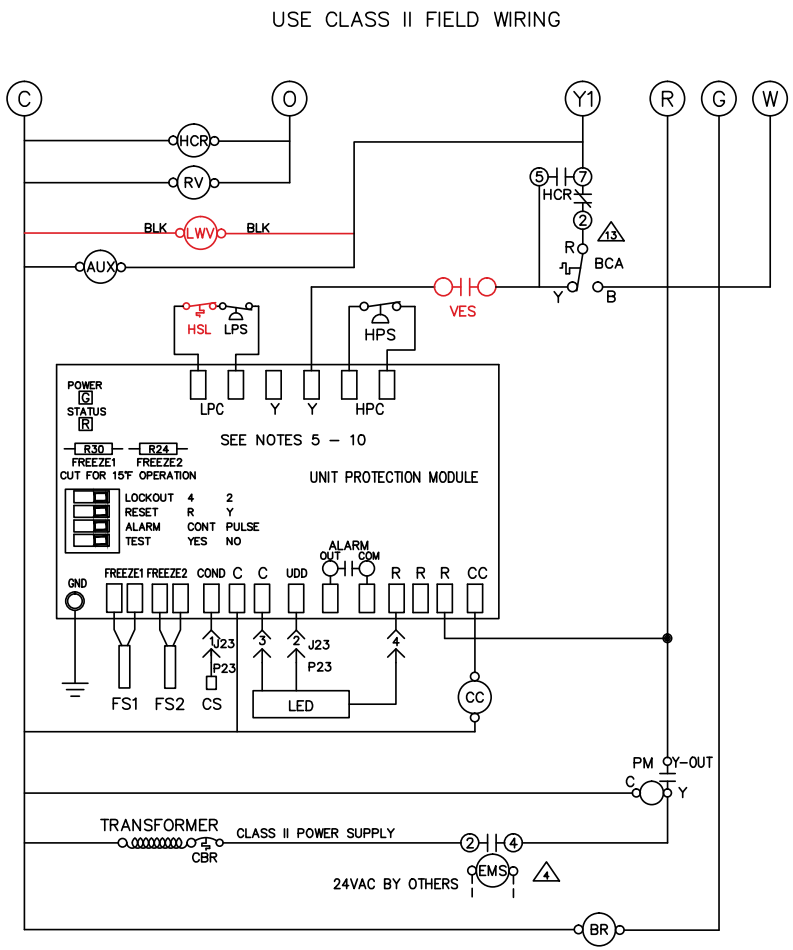

NOTES:

1. SEE UNIT NAME PLATE FOR ELECTRICAL RATING.
2. ALL FIELD WIRING MUST BE IN ACCORDANCE WITH N.E.C.–N.F.P.A. #70, COPPER CONDUCTORS ONLY – CONDUCTEURS EN CUIVRE SEULEMENT.
3. 208/230V UNITS ARE FACTORY WIRED FOR 230V OPERATION. FOR 208V OPERATION, REMOVE ORG LEAD AND CONNECT IT ON 208 LABELED TERMINAL. CAP ALL UNUSED TERMINALS.
4. FOR ALTERNATE EMS COIL VOLTAGES CONSULT FACTORY.
5. UPM–I INCLUDES BUILT IN: 270–300 SECOND RANDOM START
   300 SECOND DELAY ON BREAK
   120 SECOND LOW PRESSURE BYPASS
6. "TEST" DIP SWITCH REDUCES DELAYS TO 10 SEC WHEN SET TO YES. MUST BE SET TO "NO" FOR NORMAL OPERATION.
7. "FREEZE SENSOR" ON CONDENSER WILL OPERATE AT 26°F BY DEFAULT, IF 15°F OPERATION IS REQUIRED JUMPER R30 MUST BE CUT IF FREEZE SENSOR IS NOT INSTALLED A JUMPER SHALL BE INSTALLED BETWEEN THE FREEZE1 OR FREEZE2 SENSOR TERMINALS.
8. "ALARM OUTPUT" DIP SWITCH MUST BE SET TO "PULSE" IF BLINKING T–STAT SERVICE LIGHT IS DESIRED.
9. DEFAULT SETTINGS FOR UPM BOARD FROM FACTORY SHOWN. ALSO SEE INSTALLATION MANUAL.
10. ALARM OUTPUT IS NORMALLY OPEN (NO) DRY CONTACT. IF 24 VAC IS NEEDED, CONNECT R TO ALR–COM TERMINAL, 24VAC WILL BE SENSED ON THE ALR–OUT WHEN THE UNIT IS IN ALARM CONDITION. OUTPUT WILL BE PULSED IF PULSE IS SELECTED.
11. TERMINAL BLOCK TB3 LOCATED IN SIDE DISCONNECT SWITCH BOX.
12. CHECK FOR PROPER PHASE ROTATION ON UNITS WITH SCROLL COMPRESSORS. REVERSE ROTATION WILL DAMAGE THE COMPRESSOR AND VOID UNIT WARRANTY.
13. BCA CONTACTS R–Y OPEN ON DROP IN WATER TEMPERATURE AND R–B CLOSE.
14. LOOP PUMP ARE WIRED BETWEEN LINE AND NEUTRAL FOR 380–460VAC UNITS. FOR 208/230VAC UNITS LOOP PUMP IS WIRED BETWEEN LINES.

50PC111028 Rev. 1

Fig. 21 — PSC Motor, Three Phase/Single Stage, Deluxe D Control

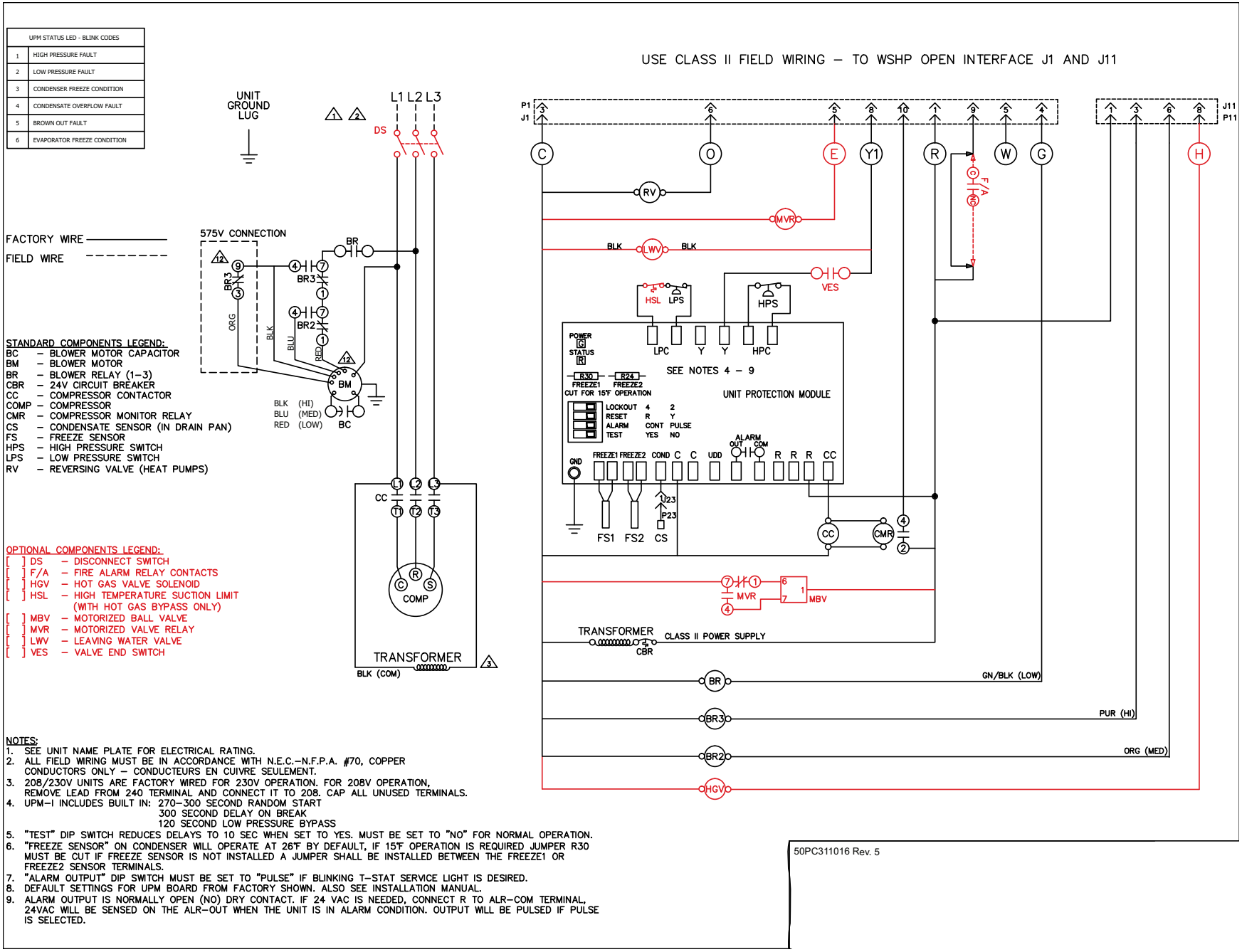

NOTES:

1. SEE UNIT NAME PLATE FOR ELECTRICAL RATING.
2. ALL FIELD WIRING MUST BE IN ACCORDANCE WITH N.E.C.–N.F.P.A. #70, COPPER CONDUCTORS ONLY — CONDUCTEURS EN CUIVRE SEULEMENT.
3. 208/230V UNITS ARE FACTORY WIRED FOR 230V OPERATION. FOR 208V OPERATION, REMOVE LEAD FROM 240 TERMINAL AND CONNECT IT TO 208. CAP ALL UNUSED TERMINALS.
4. UPM–I INCLUDES BUILT IN: 270–300 SECOND RANDOM START
   300 SECOND DELAY ON BREAK
   120 SECOND LOW PRESSURE BYPASS
5. "TEST" DIP SWITCH REDUCES DELAYS TO 10 SEC WHEN SET TO YES. MUST BE SET TO "NO" FOR NORMAL OPERATION.
6. "FREEZE SENSOR" ON CONDENSER WILL OPERATE AT 26°F BY DEFAULT, IF 15°F OPERATION IS REQUIRED JUMPER R30 MUST BE CUT IF FREEZE SENSOR IS NOT INSTALLED A JUMPER SHALL BE INSTALLED BETWEEN THE FREEZE1 OR FREEZE2 SENSOR TERMINALS.
7. "ALARM OUTPUT" DIP SWITCH MUST BE SET TO "PULSE" IF BLINKING T–STAT SERVICE LIGHT IS DESIRED.
8. DEFAULT SETTINGS FOR UPM BOARD FROM FACTORY SHOWN. ALSO SEE INSTALLATION MANUAL.
9. ALARM OUTPUT IS NORMALLY OPEN (NO) DRY CONTACT. IF 24 VAC IS NEEDED, CONNECT R TO ALR–COM TERMINAL, 24VAC WILL BE SENSED ON THE ALR–OUT WHEN THE UNIT IS IN ALARM CONDITION. OUTPUT WILL BE PULSED IF PULSE IS SELECTED.

Fig. 22 — PSC Motor, Three Phase/Single Stage, WSHP Open

UPM STATUS LED - BLINK CODES	
1	HIGH PRESSURE FAULT
2	LOW PRESSURE FAULT
3	CONDENSER FREEZE CONDITION
4	CONDENSATE OVERFLOW FAULT
5	BROWN OUT FAULT
6	EVAPORATOR FREEZE CONDITION

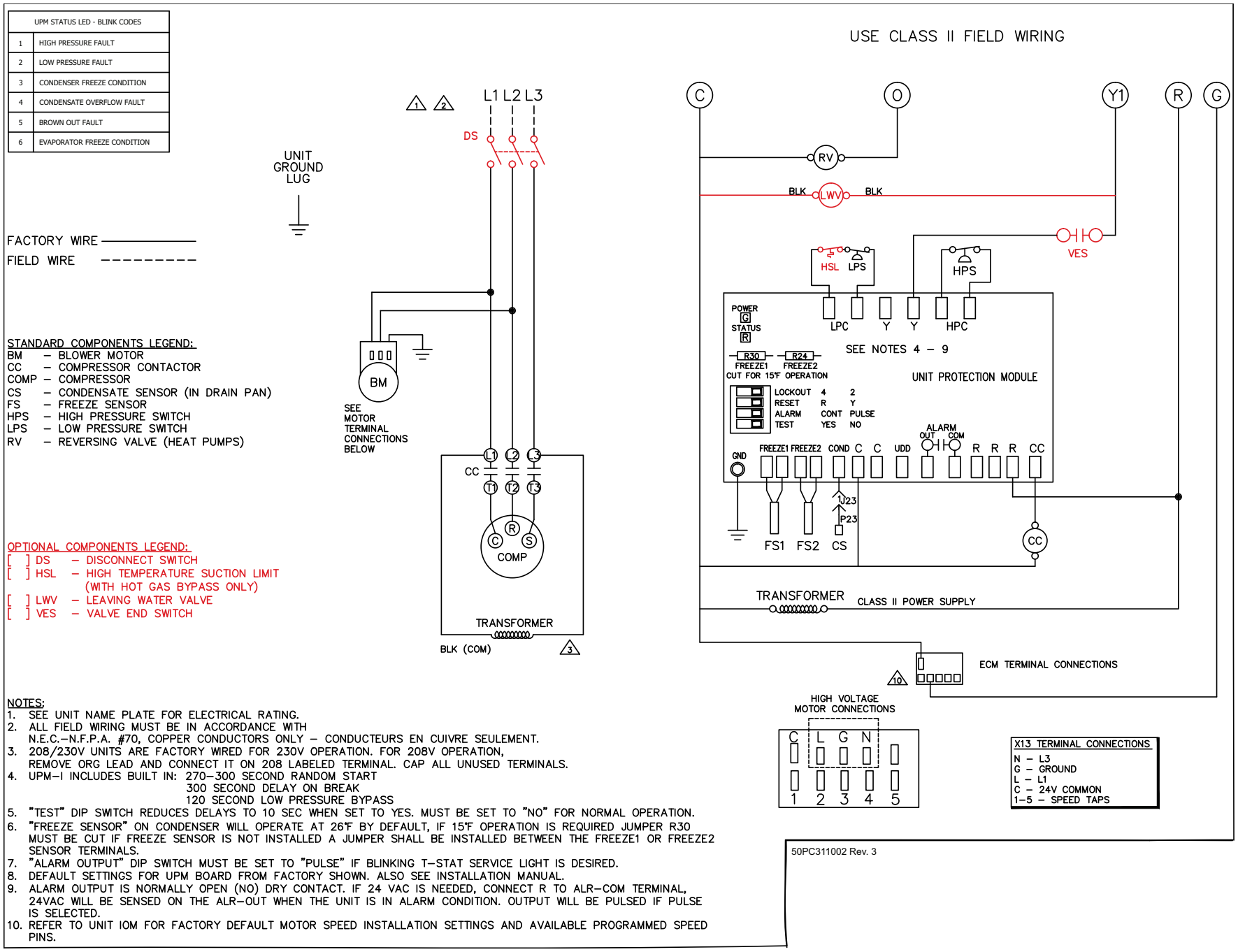

STANDARD COMPONENTS LEGEND:
BM – BLOWER MOTOR
CC – COMPRESSOR CONTACTOR
COMP – COMPRESSOR
CS – CONDENSATE SENSOR (IN DRAIN PAN)
FS – FREEZE SENSOR
HPS – HIGH PRESSURE SWITCH
LPS – LOW PRESSURE SWITCH
RV – REVERSING VALVE (HEAT PUMPS)

OPTIONAL COMPONENTS LEGEND:
[ ] DS – DISCONNECT SWITCH
[ ] HSL – HIGH TEMPERATURE SUCTION LIMIT (WITH HOT GAS BYPASS ONLY)
[ ] LWV – LEAVING WATER VALVE
[ ] VES – VALVE END SWITCH

NOTES:
1. SEE UNIT NAME PLATE FOR ELECTRICAL RATING.
2. ALL FIELD WIRING MUST BE IN ACCORDANCE WITH N.E.C.–N.F.P.A. #70, COPPER CONDUCTORS ONLY – CONDUCTEURS EN CUIVRE SEULEMENT.
3. 208/230V UNITS ARE FACTORY WIRED FOR 230V OPERATION. FOR 208V OPERATION, REMOVE ORG LEAD AND CONNECT IT ON 208 LABELED TERMINAL. CAP ALL UNUSED TERMINALS.
4. UPM–I INCLUDES BUILT IN: 270–300 SECOND RANDOM START
   300 SECOND DELAY ON BREAK
   120 SECOND LOW PRESSURE BYPASS
5. "TEST" DIP SWITCH REDUCES DELAYS TO 10 SEC WHEN SET TO YES. MUST BE SET TO "NO" FOR NORMAL OPERATION.
6. "FREEZE SENSOR" ON CONDENSER WILL OPERATE AT 26°F BY DEFAULT, IF 15°F OPERATION IS REQUIRED JUMPER R30 MUST BE CUT IF FREEZE SENSOR IS NOT INSTALLED A JUMPER SHALL BE INSTALLED BETWEEN THE FREEZE1 OR FREEZE2 SENSOR TERMINALS.
7. "ALARM OUTPUT" DIP SWITCH MUST BE SET TO "PULSE" IF BLINKING T–STAT SERVICE LIGHT IS DESIRED.
8. DEFAULT SETTINGS FOR UPM BOARD FROM FACTORY SHOWN. ALSO SEE INSTALLATION MANUAL.
9. ALARM OUTPUT IS NORMALLY OPEN (NO) DRY CONTACT. IF 24 VAC IS NEEDED, CONNECT R TO ALR–COM TERMINAL, 24VAC WILL BE SENSED ON THE ALR–OUT WHEN THE UNIT IS IN ALARM CONDITION. OUTPUT WILL BE PULSED IF PULSE IS SELECTED.
10. REFER TO UNIT IOM FOR FACTORY DEFAULT MOTOR SPEED INSTALLATION SETTINGS AND AVAILABLE PROGRAMMED SPEED PINS.

Fig. 23 — Constant Torque Motor, Three Phase/Single Stage, Better B or Complete C Control

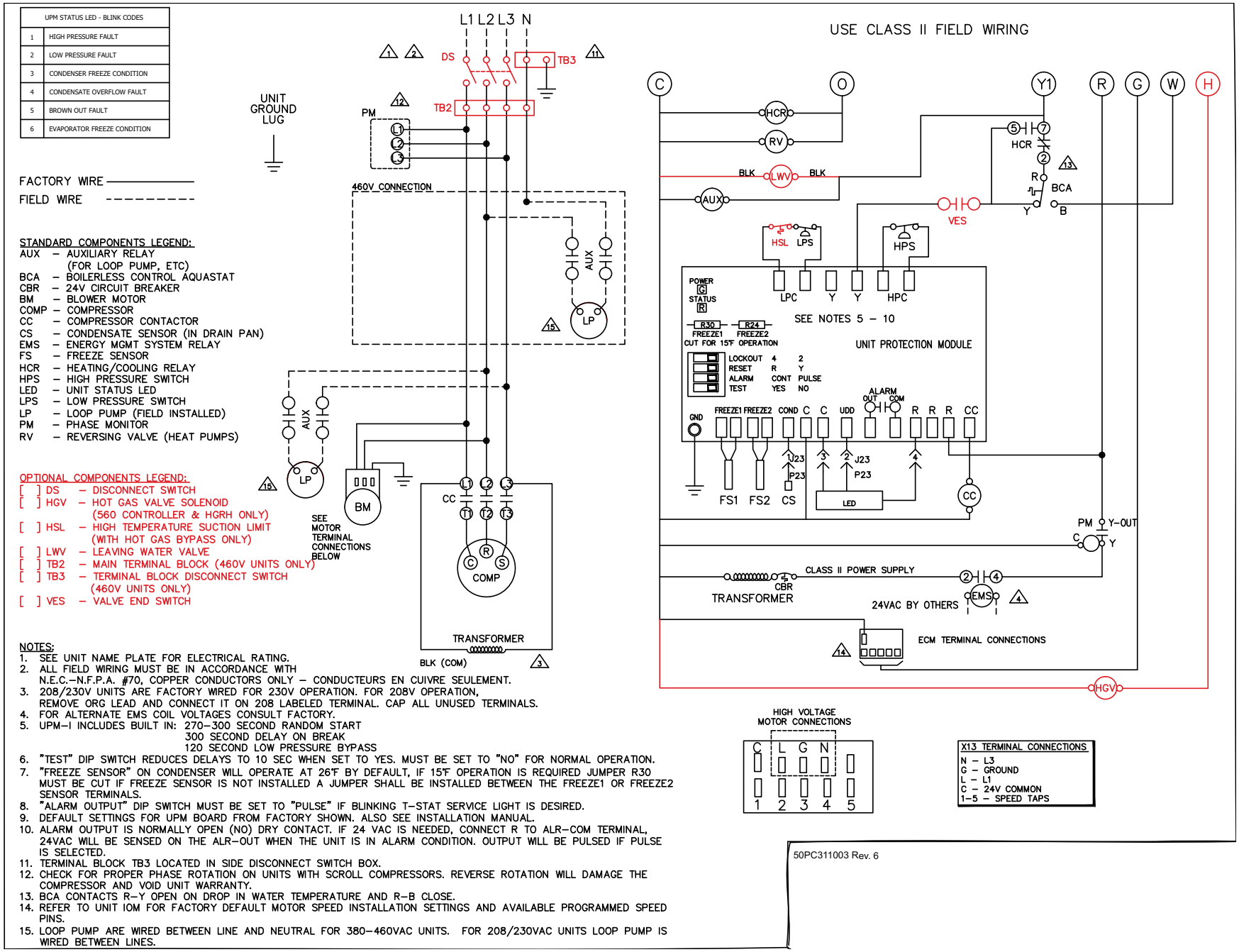

NOTES:
1. SEE UNIT NAME PLATE FOR ELECTRICAL RATING.
2. ALL FIELD WIRING MUST BE IN ACCORDANCE WITH N.E.C.–N.F.P.A. #70, COPPER CONDUCTORS ONLY – CONDUCTEURS EN CUIVRE SEULEMENT.
3. 208/230V UNITS ARE FACTORY WIRED FOR 230V OPERATION. FOR 208V OPERATION, REMOVE ORG LEAD AND CONNECT IT ON 208 LABELED TERMINAL. CAP ALL UNUSED TERMINALS.
4. FOR ALTERNATE EMS COIL VOLTAGES CONSULT FACTORY.
5. UPM–I INCLUDES BUILT IN: 270–300 SECOND RANDOM START
   300 SECOND DELAY ON BREAK
   120 SECOND LOW PRESSURE BYPASS
6. "TEST" DIP SWITCH REDUCES DELAYS TO 10 SEC WHEN SET TO YES. MUST BE SET TO "NO" FOR NORMAL OPERATION.
7. "FREEZE SENSOR" ON CONDENSER WILL OPERATE AT 26°F BY DEFAULT, IF 15°F OPERATION IS REQUIRED JUMPER R30 MUST BE CUT IF FREEZE SENSOR IS NOT INSTALLED A JUMPER SHALL BE INSTALLED BETWEEN THE FREEZE1 OR FREEZE2 SENSOR TERMINALS.
8. "ALARM OUTPUT" DIP SWITCH MUST BE SET TO "PULSE" IF BLINKING T–STAT SERVICE LIGHT IS DESIRED.
9. DEFAULT SETTINGS FOR UPM BOARD FROM FACTORY SHOWN. ALSO SEE INSTALLATION MANUAL.
10. ALARM OUTPUT IS NORMALLY OPEN (NO) DRY CONTACT. IF 24 VAC IS NEEDED, CONNECT R TO ALR–COM TERMINAL, 24VAC WILL BE SENSED ON THE ALR–OUT WHEN THE UNIT IS IN ALARM CONDITION. OUTPUT WILL BE PULSED IF PULSE IS SELECTED.
11. TERMINAL BLOCK TB3 LOCATED IN SIDE DISCONNECT SWITCH BOX.
12. CHECK FOR PROPER PHASE ROTATION ON UNITS WITH SCROLL COMPRESSORS. REVERSE ROTATION WILL DAMAGE THE COMPRESSOR AND VOID UNIT WARRANTY.
13. BCA CONTACTS R–Y OPEN ON DROP IN WATER TEMPERATURE AND R–B CLOSE.
14. REFER TO UNIT IOM FOR FACTORY DEFAULT MOTOR SPEED INSTALLATION SETTINGS AND AVAILABLE PROGRAMMED SPEED PINS.
15. LOOP PUMP ARE WIRED BETWEEN LINE AND NEUTRAL FOR 380–460VAC UNITS. FOR 208/230VAC UNITS LOOP PUMP IS WIRED BETWEEN LINES.

Fig. 24 — Constant Torque Motor, Three Phase/Single Stage, Deluxe D Control

UPM STATUS LED - BLINK CODES	
1	HIGH PRESSURE FAULT
2	LOW PRESSURE FAULT
3	CONDENSER FREEZE CONDITION
4	CONDENSATE OVERFLOW FAULT
5	BROWN OUT FAULT
6	EVAPORATOR FREEZE CONDITION

FACTORY WIRE ————————

FIELD WIRE - - - - - - - - - -

STANDARD COMPONENTS LEGEND:

AUX – AUXILIARY RELAY (FOR LOOP PUMP, ETC)
BCA – BOILERLESS CONTROL AQUASTAT
BC – BLOWER MOTOR CAPACITOR
BM – BLOWER MOTOR
BR – BLOWER RELAY
CBR – 24V CIRCUIT BREAKER
COMP – COMPRESSOR
CC – COMPRESSOR CONTACTOR
CS – CONDENSATE SENSOR (IN DRAIN PAN)
CR – COOLING RELAY
FS – FREEZE SENSOR
HCR – HEATING/COOLING RELAY
HPS – HIGH PRESSURE SWITCH
LED – UNIT STATUS LED
LP – LOOP PUMP (FIELD INSTALLED)
LPS – LOW PRESSURE SWITCH
PM – PHASE MONITOR
RH – REHEAT RELAY
RV – REVERSING VALVE (HEAT PUMPS)

OPTIONAL COMPONENTS LEGEND:

[ ] DS – DISCONNECT SWITCH
[ ] HSL – HIGH TEMPERATURE SUCTION LIMIT (WITH HOT GAS BYPASS ONLY)
[ ] LWV – LEAVING WATER VALVE
[ ] TB2 – MAIN TERMINAL BLOCK (460V UNITS ONLY)
[ ] TB3 – TERMINAL BLOCK DISCONNECT SWITCH (460V UNITS ONLY)
[ ] VES – VALVE END SWITCH

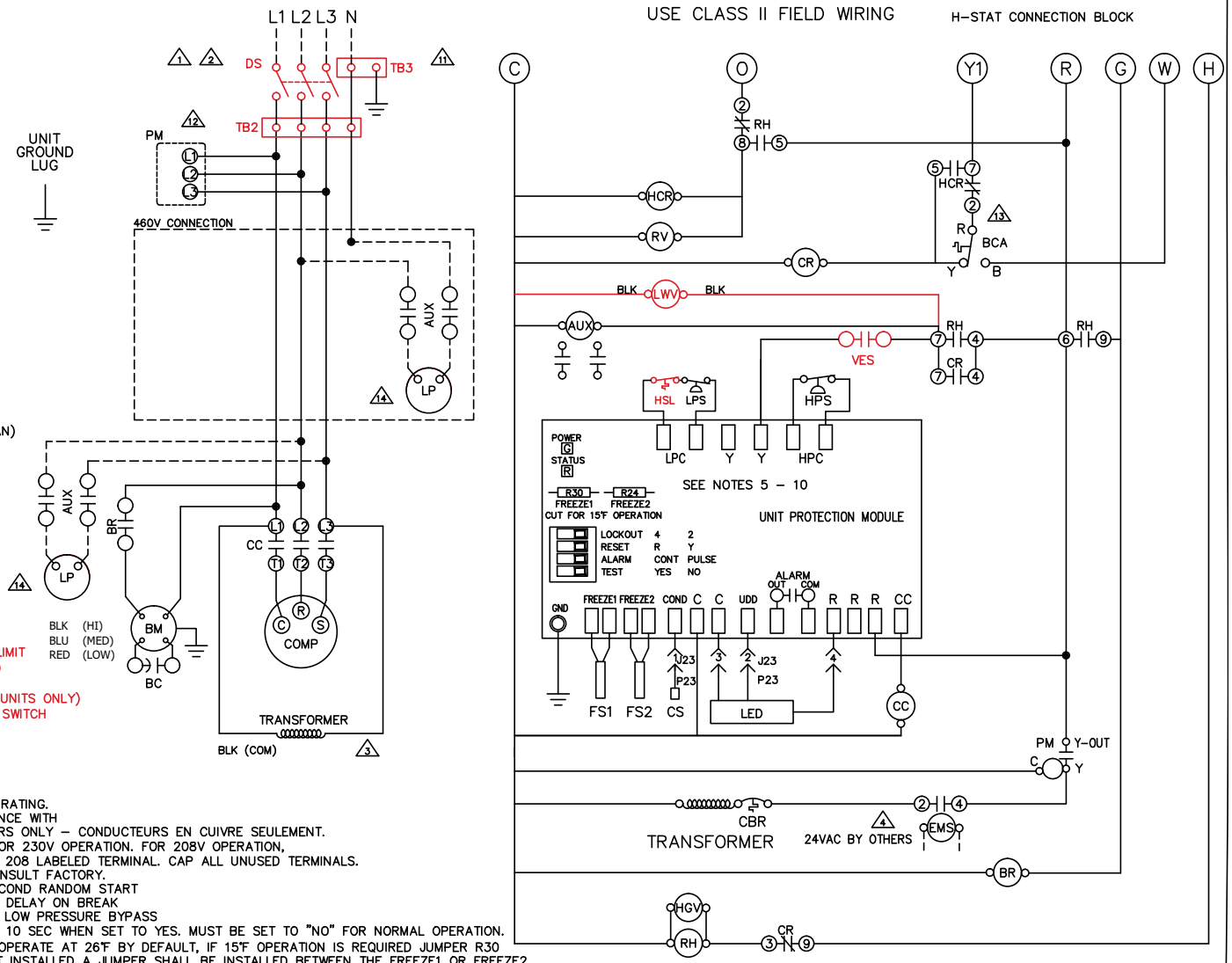

NOTES:

1. SEE UNIT NAME PLATE FOR ELECTRICAL RATING.
2. ALL FIELD WIRING MUST BE IN ACCORDANCE WITH N.E.C.–N.F.P.A. #70, COPPER CONDUCTORS ONLY – CONDUCTEURS EN CUIVRE SEULEMENT.
3. 208/230V UNITS ARE FACTORY WIRED FOR 230V OPERATION. FOR 208V OPERATION, REMOVE ORG LEAD AND CONNECT IT ON 208 LABELED TERMINAL. CAP ALL UNUSED TERMINALS.
4. FOR ALTERNATE EMS COIL VOLTAGES CONSULT FACTORY.
5. UPM–I INCLUDES BUILT IN: 270–300 SECOND RANDOM START
   300 SECOND DELAY ON BREAK
   120 SECOND LOW PRESSURE BYPASS
6. "TEST" DIP SWITCH REDUCES DELAYS TO 10 SEC WHEN SET TO YES. MUST BE SET TO "NO" FOR NORMAL OPERATION.
7. "FREEZE SENSOR" ON CONDENSER WILL OPERATE AT 26°F BY DEFAULT, IF 15°F OPERATION IS REQUIRED JUMPER R30 MUST BE CUT IF FREEZE SENSOR IS NOT INSTALLED A JUMPER SHALL BE INSTALLED BETWEEN THE FREEZE1 OR FREEZE2 SENSOR TERMINALS.
8. "ALARM OUTPUT" DIP SWITCH MUST BE SET TO "PULSE" IF BLINKING T–STAT SERVICE LIGHT IS DESIRED.
9. DEFAULT SETTINGS FOR UPM BOARD FROM FACTORY SHOWN. ALSO SEE INSTALLATION MANUAL.
10. ALARM OUTPUT IS NORMALLY OPEN (NO) DRY CONTACT. IF 24 VAC IS NEEDED, CONNECT R TO ALR–COM TERMINAL, 24VAC WILL BE SENSED ON THE ALR–OUT WHEN THE UNIT IS IN ALARM CONDITION. OUTPUT WILL BE PULSED IF PULSE IS SELECTED.
11. TERMINAL BLOCK TB3 LOCATED IN SIDE DISCONNECT SWITCH BOX.
12. CHECK FOR PROPER PHASE ROTATION ON UNITS WITH SCROLL COMPRESSORS. REVERSE ROTATION WILL DAMAGE THE COMPRESSOR AND VOID UNIT WARRANTY.
13. BCA CONTACTS R–Y OPEN ON DROP IN WATER TEMPERATURE AND R–B CLOSE.
14. LOOP PUMP ARE WIRED BETWEEN LINE AND NEUTRAL FOR 380–460VAC UNITS. FOR 208/230VAC UNITS LOOP PUMP IS WIRED BETWEEN LINES.

Fig. 25 — Constant Torque Motor, Three Phase/Single Stage, WSHP Open

TRANSFORMER PRIMARY LEAD CLR:	
120	– WHT
208	– RED
240	– ORG
277	– BRN
380	– PUR OR YEL
460	– BLK/RED
575	– GRY

UPM STATUS LED - BLINK CODES	
1	HIGH PRESSURE FAULT
2	LOW PRESSURE FAULT
3	CONDENSER FREEZE CONDITION
4	CONDENSATE OVERFLOW FAULT
5	BROWN OUT FAULT
6	EVAPORATOR FREEZE CONDITION

FACTORY WIRE ————————

FIELD WIRE - - - - - - - -

STANDARD COMPONENTS LEGEND:

BM – BLOWER MOTOR
COMP – COMPRESSOR
CBR – 24V CIRCUIT BREAKER
CC – COMPRESSOR CONTACTOR
CS – CONDENSATE SENSOR (IN DRAIN PAN)
FS – FREEZE SENSOR
HPS – HIGH PRESSURE SWITCH
LPS – LOW PRESSURE SWITCH
RV – REVERSE VALVE (HEAT PUMPS)

OPTIONAL COMPONENTS LEGEND:

[ ] DS – DISCONNECT SWITCH
[ ] HSL – HIGH TEMPERATURE SUCTION LIMIT (WITH HOT GAS BYPASS ONLY)
[ ] LWV – LEAVING WATER VALVE
[ ] OLR – OVERLOAD RELAY
[ ] TB2 – MAIN TERMINAL BLOCK (460V UNITS ONLY)
[ ] TB3 – TERMINAL BLOCK DISCONNECT SWITCH
[ ] VES – VALVE END SWITCH

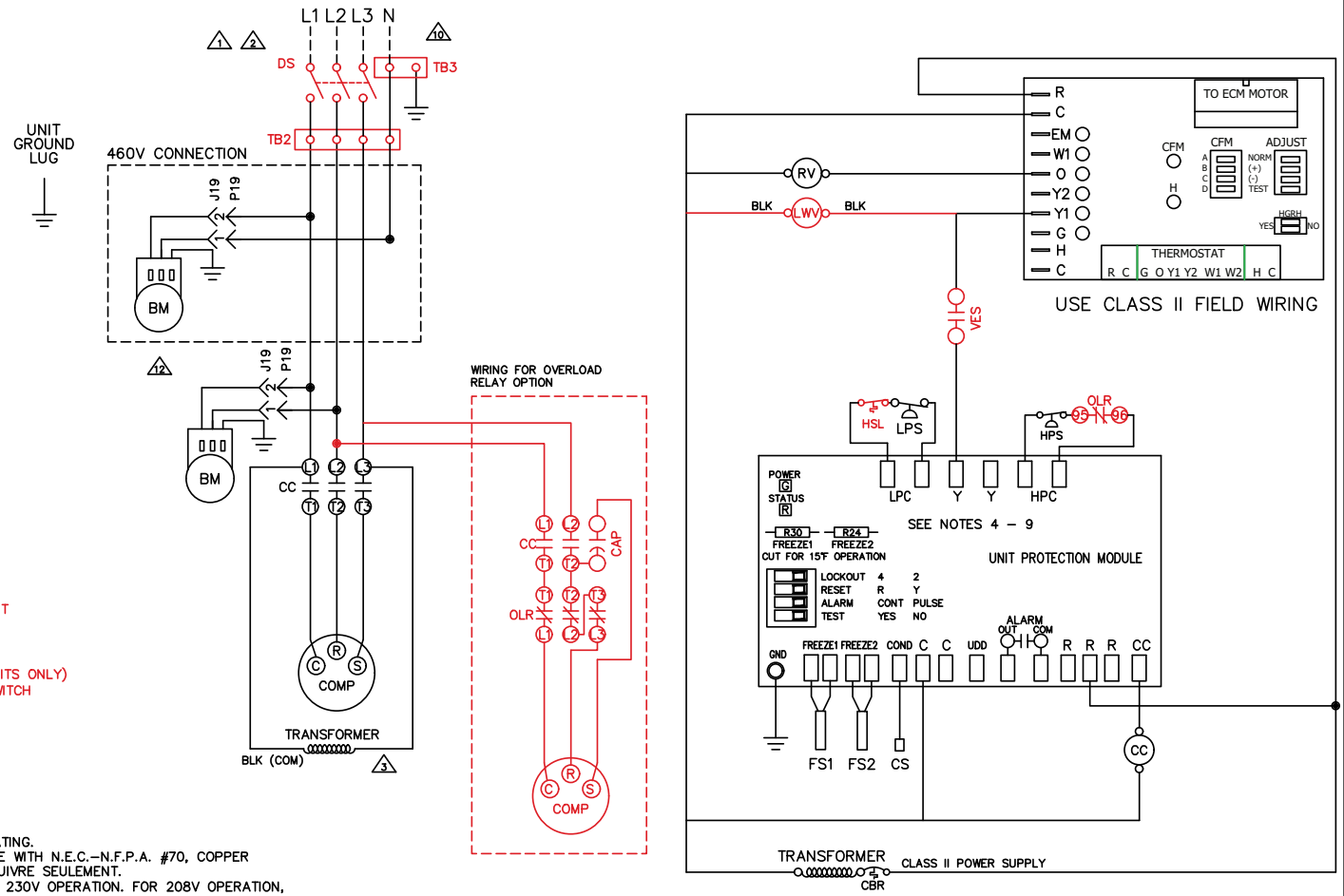

NOTES:

1. SEE UNIT NAME PLATE FOR ELECTRICAL RATING.
2. ALL FIELD WIRING MUST BE IN ACCORDANCE WITH N.E.C.–N.F.P.A. #70, COPPER CONDUCTORS ONLY – CONDUCTEURS EN CUIVRE SEULEMENT.
3. 208/230V UNITS ARE FACTORY WIRED FOR 230V OPERATION. FOR 208V OPERATION, REMOVE LEAD FROM 240 TERMINAL AND CONNECT IT TO 208. CAP ALL UNUSED TERMINALS.
4. UPM–I INCLUDES BUILT IN: 270–300 SECOND RANDOM START
   300 SECOND DELAY ON BREAK
   120 SECOND LOW PRESSURE BYPASS
5. "TEST" DIP SWITCH REDUCES DELAYS TO 10 SEC WHEN SET TO YES. MUST BE SET TO "NO" FOR NORMAL OPERATION.
6. "FREEZE SENSOR" ON CONDENSER WILL OPERATE AT 26°F BY DEFAULT, IF 15°F OPERATION IS REQUIRED JUMPER R30 MUST BE CUT IF FREEZE SENSOR IS NOT INSTALLED A JUMPER SHALL BE INSTALLED BETWEEN THE FREEZE1 OR FREEZE2 SENSOR TERMINALS.
7. "ALARM OUTPUT" DIP SWITCH MUST BE SET TO "PULSE" IF BLINKING T–STAT SERVICE LIGHT IS DESIRED.
8. DEFAULT SETTINGS FOR UPM BOARD FROM FACTORY SHOWN. ALSO SEE INSTALLATION MANUAL.
9. ALARM OUTPUT IS NORMALLY OPEN (NO) DRY CONTACT. IF 24 VAC IS NEEDED, CONNECT R TO ALR–COM TERMINAL, 24VAC WILL BE SENSED ON THE ALR–OUT WHEN THE UNIT IS IN ALARM CONDITION. OUTPUT WILL BE PULSED IF PULSE IS SELECTED.
10. TERMINAL BLOCK TB3 LOCATED IN SIDE DISCONNECT SWITCH BOX.
11. REFER TO UNIT IOM FOR FACTORY DEFAULT MOTOR SPEED INSTALLATION SETTINGS AND AVAILABLE PROGRAMMED SPEED PINS.
12. EON MOTOR IS WIRED BETWEEN LINE AND NEUTRAL FOR 380–460VAC UNITS. FOR 208/230 VAC UNITS EON MOTOR IS WIRED BETWEEN LINES.

50PC311025 Rev. 1

Fig. 26 — Constant Airflow Motor, Three Phase/Single Stage, Better B or Complete C Control

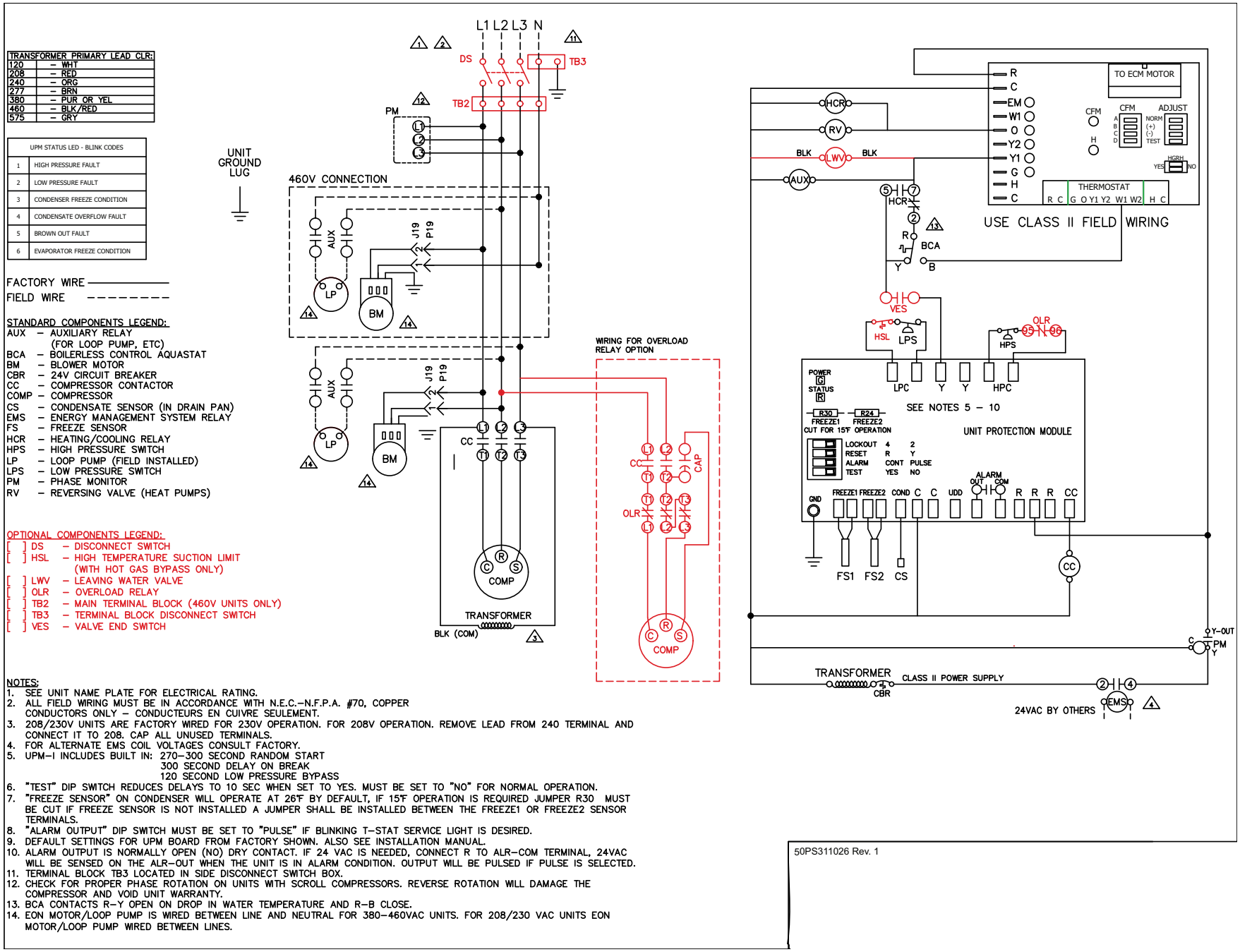

NOTES:

1. SEE UNIT NAME PLATE FOR ELECTRICAL RATING.
2. ALL FIELD WIRING MUST BE IN ACCORDANCE WITH N.E.C.–N.F.P.A. #70, COPPER CONDUCTORS ONLY – CONDUCTEURS EN CUIVRE SEULEMENT.
3. 208/230V UNITS ARE FACTORY WIRED FOR 230V OPERATION. FOR 208V OPERATION. REMOVE LEAD FROM 240 TERMINAL AND CONNECT IT TO 208. CAP ALL UNUSED TERMINALS.
4. FOR ALTERNATE EMS COIL VOLTAGES CONSULT FACTORY.
5. UPM–I INCLUDES BUILT IN: 270–300 SECOND RANDOM START
   300 SECOND DELAY ON BREAK
   120 SECOND LOW PRESSURE BYPASS
6. "TEST" DIP SWITCH REDUCES DELAYS TO 10 SEC WHEN SET TO YES. MUST BE SET TO "NO" FOR NORMAL OPERATION.
7. "FREEZE SENSOR" ON CONDENSER WILL OPERATE AT 26°F BY DEFAULT, IF 15°F OPERATION IS REQUIRED JUMPER R30 MUST BE CUT IF FREEZE SENSOR IS NOT INSTALLED A JUMPER SHALL BE INSTALLED BETWEEN THE FREEZE1 OR FREEZE2 SENSOR TERMINALS.
8. "ALARM OUTPUT" DIP SWITCH MUST BE SET TO "PULSE" IF BLINKING T–STAT SERVICE LIGHT IS DESIRED.
9. DEFAULT SETTINGS FOR UPM BOARD FROM FACTORY SHOWN. ALSO SEE INSTALLATION MANUAL.
10. ALARM OUTPUT IS NORMALLY OPEN (NO) DRY CONTACT. IF 24 VAC IS NEEDED, CONNECT R TO ALR–COM TERMINAL, 24VAC WILL BE SENSED ON THE ALR–OUT WHEN THE UNIT IS IN ALARM CONDITION. OUTPUT WILL BE PULSED IF PULSE IS SELECTED.
11. TERMINAL BLOCK TB3 LOCATED IN SIDE DISCONNECT SWITCH BOX.
12. CHECK FOR PROPER PHASE ROTATION ON UNITS WITH SCROLL COMPRESSORS. REVERSE ROTATION WILL DAMAGE THE COMPRESSOR AND VOID UNIT WARRANTY.
13. BCA CONTACTS R–Y OPEN ON DROP IN WATER TEMPERATURE AND R–B CLOSE.
14. EON MOTOR/LOOP PUMP IS WIRED BETWEEN LINE AND NEUTRAL FOR 380–460VAC UNITS. FOR 208/230 VAC UNITS EON MOTOR/LOOP PUMP WIRED BETWEEN LINES.

Fig. 27 — Constant Airflow Motor, Three Phase/Single Stage, Deluxe D Control

UPM STATUS LED - BLINK CODES	
1	HIGH PRESSURE FAULT
2	LOW PRESSURE FAULT
3	CONDENSER FREEZE CONDITION
4	CONDENSATE OVERFLOW FAULT
5	BROWN OUT FAULT
6	EVAPORATOR FREEZE CONDITION

FACTORY WIRE ————————

FIELD WIRE - - - - - - - -

STANDARD COMPONENTS LEGEND:

BM – BLOWER MOTOR
CAP – COMPRESSOR CAPACITOR
CBR – 24V CIRCUIT BREAKER
CC – COMPRESSOR CONTACTOR
CMR – COMPRESSOR MONITOR RELAY
COMP – COMPRESSOR
CS – CONDENSATE SENSOR (IN DRAIN PAN)
FS – FREEZE SENSOR
HPS – HIGH PRESSURE SWITCH
LPS – LOW PRESSURE SWITCH
RV – REVERSING VALVE (HEAT PUMPS)

OPTIONAL COMPONENTS LEGEND:

[ ] DS – DISCONNECT SWITCH
[ ] F/A – FIRE ALARM RELAY
[ ] HGV – HOT GAS VALVE
[ ] HSL – HIGH TEMPERATURE SUCTION LIMIT (WITH HOT GAS BYPASS ONLY)
[ ] LWV – LEAVING WATER VALVE
[ ] MBV – MOTORIZED BALL VALVE
[ ] MVR – MOTORIZED VALVE RELAY
[ ] OLR – OVERLOAD RELAY
[ ] TB2 – MAIN TERMINAL BLOCK (460V UNITS ONLY)
[ ] TB3 – TERMINAL BLOCK DISCONNECT SWITCH
[ ] VES – VALVE END SWITCH
[ ] Y2S – 2ND STEP SOLENOID

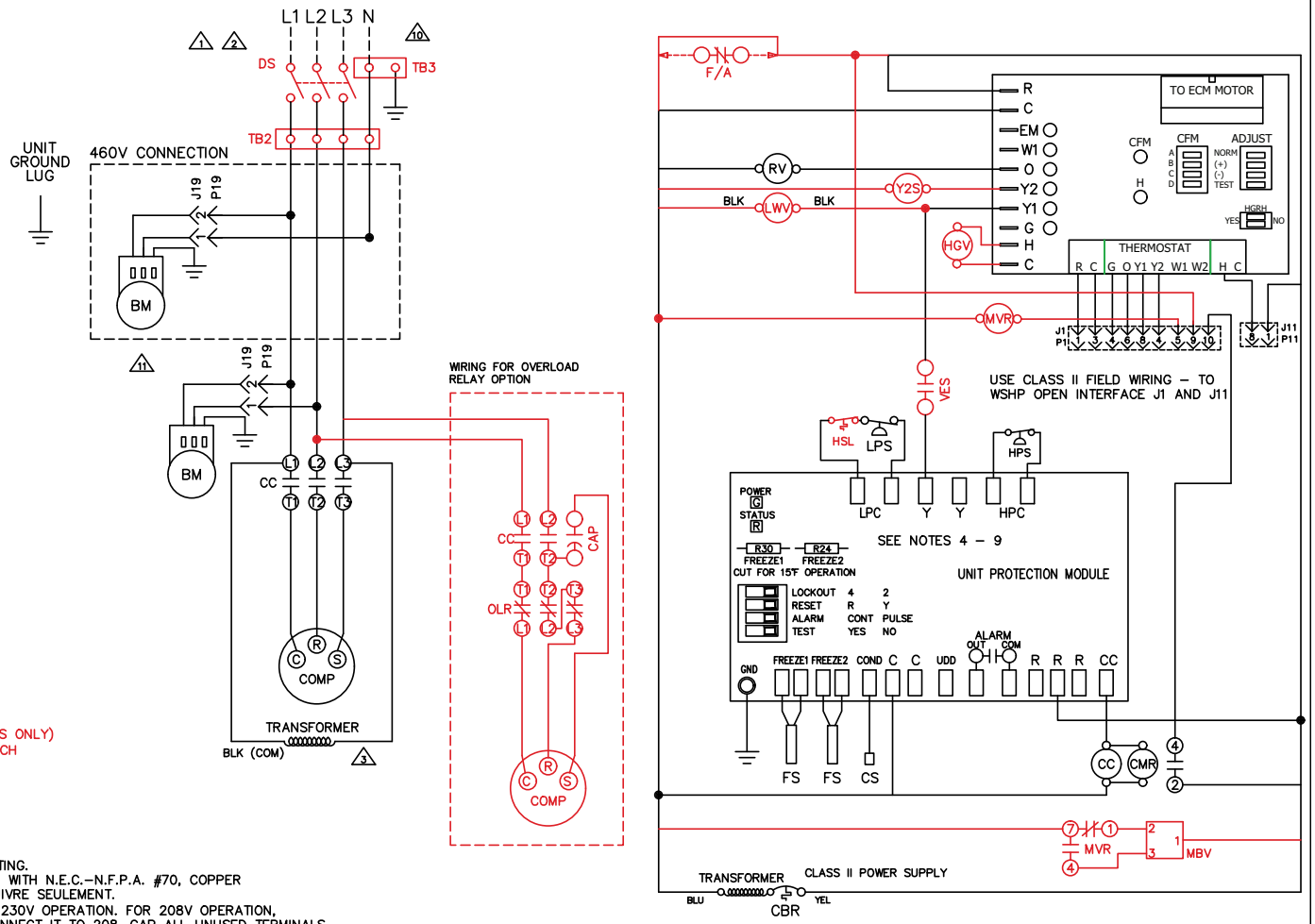

NOTES:

1. SEE UNIT NAME PLATE FOR ELECTRICAL RATING.
2. ALL FIELD WIRING MUST BE IN ACCORDANCE WITH N.E.C.–N.F.P.A. #70, COPPER CONDUCTORS ONLY – CONDUCTEURS EN CUIVRE SEULEMENT.
3. 208/230V UNITS ARE FACTORY WIRED FOR 230V OPERATION. FOR 208V OPERATION, REMOVE LEAD FROM 240 TERMINAL AND CONNECT IT TO 208. CAP ALL UNUSED TERMINALS.
4. UPM–I INCLUDES BUILT IN: 270–300 SECOND RANDOM START
   300 SECOND DELAY ON BREAK
   120 SECOND LOW PRESSURE BYPASS
5. "TEST" DIP SWITCH REDUCES DELAYS TO 10 SEC WHEN SET TO YES. MUST BE SET TO "NO" FOR NORMAL OPERATION.
6. "FREEZE SENSOR" ON CONDENSER WILL OPERATE AT 26°F BY DEFAULT, IF 15°F OPERATION IS REQUIRED JUMPER R30 MUST BE CUT IF FREEZE SENSOR IS NOT INSTALLED A JUMPER SHALL BE INSTALLED BETWEEN THE FREEZE1 OR FREEZE2 SENSOR TERMINALS.
7. "ALARM OUTPUT" DIP SWITCH MUST BE SET TO "PULSE" IF BLINKING T–STAT SERVICE LIGHT IS DESIRED.
8. DEFAULT SETTINGS FOR UPM BOARD FROM FACTORY SHOWN. ALSO SEE INSTALLATION MANUAL.
9. ALARM OUTPUT IS NORMALLY OPEN (NO) DRY CONTACT. IF 24 VAC IS NEEDED, CONNECT R TO ALR–COM TERMINAL, 24VAC WILL BE SENSED ON THE ALR–OUT WHEN THE UNIT IS IN ALARM CONDITION. OUTPUT WILL BE PULSED IF PULSE IS SELECTED.
10. TERMINAL BLOCK TB3 LOCATED IN SIDE DISCONNECT SWITCH BOX.
11. CHECK FOR PROPER PHASE ROTATION ON UNITS WITH SCROLL COMPRESSORS. REVERSE ROTATION WILL DAMAGE THE COMPRESSOR AND VOID UNIT WARRANTY.

50PC311027 Rev. 1

Fig. 28 — Constant Airflow Motor, Three Phase/Single Stage, WSHP Open

OPTIONAL WIRING

STANDARD COMPONENTS:

DATS - DISCHARGE AIR TEMP SENSOR
LWTS - LEAVING WATER TEMP SENSOR

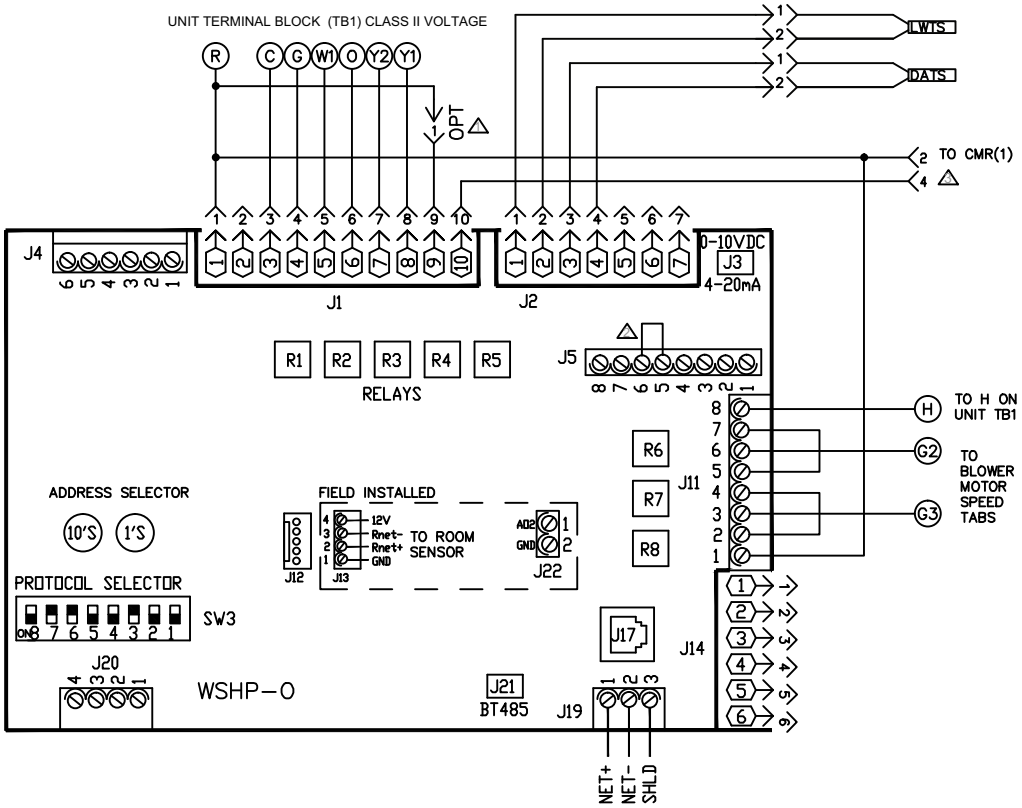

△ J1-9 USED TO CONNECT FIRE ALARM RELAY OR PHASE MONITOR OPTIONS

△ FACTORY JUMPER IS INSTALLED ON J5-5 AND J5-6 IF CONDENSATE FLOAT SWITCH (NC) IS NOT PRESENT

△ FOR 2-STAGE UNITS, CONNECT CMR CONN ACROSS PINS 4 AND 6 OF CMR1 WITH SIGNAL CMR-4 GOING TO PIN 4 AND SIGNAL CMR-2 GOING TO PIN 6.

Fig. 29 — WSHP Open DDC Wiring Diagram

Table 4 — 50PC Electrical Data with PSC Blower Motor

50PC UNIT	RATED VOLTAGE V-Ph-Hz	VOLTAGE MIN/MAX	COMPRESSOR			BLOWER MOTOR			MIN CIRCUIT AMP	MAX FUSE/ HACR
			QTY	RLA	LRA	FLA	HP	FLA		
50PC007	208-230/1/60	197/253	1	2.5	17.7	0.96	0.10	3.5	4.1	15
	265/1/60	238/292	1	2.1	13.5	0.85	0.10	3.0	3.5	15
50PC009	208-230/1/60	197/253	1	3.4	22.2	0.96	0.10	4.4	5.2	15
	265/1/60	238/292	1	2.9	18.8	0.85	0.10	3.8	4.5	15
50PC012	115/1/60	103/126	1	9.6	58.4	2.20	0.10	11.8	14.2	20
	208-230/1/60	197/253	1	4.6	27.9	0.96	0.10	5.6	6.7	15
	265/1/60	238/292	1	3.8	22.2	0.85	0.10	4.7	5.6	15
50PC015	208-230/1/60	197/253	1	5.6	29.0	1.10	0.17	6.7	8.1	15
	265/1/60	238/292	1	4.6	20.0	0.90	0.17	5.5	6.7	15
50PC018	208-230/1/60	197/253	1	7.4	33.0	1.80	0.25	9.2	11.1	15
	265/1/60	238/292	1	6.0	28.0	1.60	0.25	7.6	9.1	15
50PC024	208-230/1/60	197/253	1	13.5	58.3	1.80	0.25	15.3	18.7	30
	265/1/60	238/292	1	9.0	54.0	1.60	0.25	10.6	12.9	20
	208-230/3/60	197/253	1	7.1	55.4	1.80	0.25	8.9	10.7	15
	460/3/60	414/506	1	3.5	28.0	0.90	0.25	4.4	5.3	15
50PC030	208-230/1/60	197/253	1	12.8	64.0	1.80	0.25	14.6	17.8	30
	265/1/60	238/292	1	10.9	60.0	1.60	0.25	12.5	15.2	25
	460/3/60	414/506	1	5.1	28.0	0.90	0.25	6.0	7.3	15
50PC036	208-230/1/60	197/253	1	15.2	79.0	4.40	0.50	19.6	23.4	35
	208-230/1/60*	197/253	1	15.4	83.9	4.40	0.50	19.8	23.7	35
	265/1/60	238/292	1	11.6	72.0	3.30	0.50	14.9	17.8	25
	208-230/3/60	197/253	1	10.4	73.0	4.40	0.50	14.8	17.4	25
	460/3/60	414/506	1	5.8	38.0	1.80	0.50	7.6	9.1	15
50PC041	208-230/1/60	197/253	1	15.4	83.9	4.40	0.75	19.8	23.7	35
	208-230/3/60	197/253	1	10.4	73.0	4.40	0.75	14.8	17.4	25
	460/3/60	414/506	1	5.8	38.0	2.80	0.75	8.6	10.1	15
50PC042	208-230/1/60	197/253	1	16.2	109.0	4.40	0.50	20.6	24.7	40
	208-230/3/60	197/253	1	11.2	84.0	4.40	0.50	15.6	18.4	25
	460/3/60	414/506	1	5.6	44.0	1.80	0.50	7.4	8.8	15
50PC048	208-230/1/60	197/253	1	19.6	130.0	4.40	0.75	24.0	28.9	45
	208-230/3/60	197/253	1	13.7	83.1	4.40	0.75	18.1	21.5	35
	460/3/60	414/506	1	6.2	41.0	2.80	0.75	9.0	10.6	15
	575/3/60	517/633	1	4.8	33.0	2.60	0.75	7.4	8.6	15
50PC060	208-230/1/60	197/253	1	26.3	134.0	5.50	0.75	31.8	38.4	60
	208-230/1/60†	197/253	1	24.7	166.0	5.50	0.75	30.2	36.4	60
	208-230/3/60	197/253	1	15.6	110.0	5.50	0.75	21.1	25.0	40
	460/3/60	414/506	1	7.8	52.0	2.80	0.75	10.6	12.6	20
	575/3/60	517/633	1	5.8	38.9	2.60	0.75	8.4	9.9	15
50PC070	208-230/1/60	197/253	1	28.3	178.0	5.50	0.75	33.8	40.9	60
	208-230/3/60	197/253	1	19.2	136.0	5.50	0.75	24.7	29.5	45
	460/3/60	414/506	1	8.7	66.1	2.80	0.75	11.5	13.7	20
	575/3/60	517/633	1	6.9	55.3	2.60	0.75	9.5	11.2	15

LEGEND

FLA — Full Load Amps
HACR — Heating, Air-Conditioning and Refrigeration
LRA — Locked Rotor Amps
RLA — Rated Load Amps

* For units produced after week 46 of 2019.
† For units produced after week 48 of 2019.

Table 5 — 50PC Electrical Data with Constant Torque ECM Blower Motor

50PC UNIT	VOLTAGE CODE	RATED VOLTAGE V-Ph-Hz	VOLTAGE MIN/MAX	COMPRESSOR			BLOWER MOTOR			MIN CIRCUIT AMP	MAX FUSE/ HACR
				QTY	RLA	LRA	FLA	HP	FLA		
50PC015	1	208-230/1/60	197/253	1	5.6	29.0	2.8	0.33	8.4	9.8	15
	2	265/1/60	238/292	1	4.6	20.0	2.6	0.33	7.2	8.4	15
50PC018	1	208-230/1/60	197/253	1	7.4	33.0	2.8	0.33	10.2	12.1	15
	2	265/1/60	238/292	1	6.0	28.0	2.6	0.33	8.6	10.1	15
50PC024	1	208-230/1/60	197/253	1	13.5	58.3	2.8	0.33	16.3	19.7	30
	2	265/1/60	238/292	1	9.0	54.0	2.6	0.33	11.6	13.9	20
	3	208-230/3/60	197/253	1	7.1	55.4	2.8	0.33	9.9	11.7	15
	4	460/3/60	414/506	1	3.5	28.0	2.1	0.50	5.6	6.5	15
50PC030	1	208-230/1/60	197/253	1	12.8	64.0	2.8	0.33	15.6	18.8	30
	2	265/1/60	238/292	1	10.9	60.0	2.6	0.33	13.5	16.2	25
	3	208-230/3/60	197/253	1	8.3	58.0	2.8	0.33	11.1	13.2	20
	4	460/3/60	414/506	1	5.1	28.0	2.1	0.50	7.2	8.5	15
50PC036	1	208-230/1/60	197/253	1	16.7	79.0	4.1	0.50	20.8	25.0	40
	1	208-230/1/60*	197/253	1	15.4	83.9	4.1	0.50	19.5	23.4	35
	2	265/1/60	238/292	1	11.6	72.0	3.6	0.50	15.2	18.1	25
	3	208-230/3/60	197/253	1	10.4	73.0	4.1	0.50	14.5	17.1	25
	4	460/3/60	414/506	1	5.8	38.0	2.1	0.50	7.9	9.4	15
50PC041	1	208-230/1/60	197/253	1	15.4	83.9	6.0	0.75	21.4	25.3	40
	3	208-230/3/60	197/253	1	10.4	73.0	6.0	0.75	16.4	19.0	25
	4	460/3/60	414/506	1	5.8	38.0	3.2	0.75	9.0	10.5	15
50PC042	1	208-230/1/60	197/253	1	16.7	109.0	6.0	0.75	22.7	26.9	40
	3	208-230/3/60	197/253	1	11.2	84.0	6.0	0.75	17.2	20.0	30
	4	460/3/60	414/506	1	5.6	44.0	3.2	0.75	8.8	10.2	15
50PC048	1	208-230/1/60	197/253	1	19.6	130.0	6.0	0.75	25.6	30.5	50
	3	208-230/3/60	197/253	1	13.7	83.1	6.0	0.75	19.7	23.1	35
	4	460/3/60	414/506	1	6.2	41.0	3.2	0.75	9.4	11.0	15
50PC060	1	208-230/1/60	197/253	1	26.3	134.0	7.6	1.00	33.9	40.5	60
	1	208-230/1/60†	197/253	1	24.7	166.0	7.6	1.00	32.3	38.5	60
	3	208-230/3/60	197/253	1	15.6	110.0	7.6	1.00	23.2	27.1	40
	4	460/3/60	414/506	1	7.8	52.0	4.0	1.00	11.8	13.8	20
50PC070	1	208-230/1/60	197/253	1	28.3	178.0	7.6	1.00	35.9	43.0	70
	3	208-230/3/60	197/253	1	19.2	136.0	7.6	1.00	26.8	31.6	50
	4	460/3/60	414/506	1	8.7	66.0	4.0	1.00	12.7	14.9	20

LEGEND

FLA — Full Load Amps
HACR — Heating, Air-Conditioning and Refrigeration
LRA — Locked Rotor Amps
RLA — Rated Load Amps

* For units produced after week 46 of 2019.
† For units produced after week 48 of 2019.

Table 6 — 50PC Electrical Data with Constant Airflow ECM Blower Motor

MODEL	V/Ph/Hz	VOLTAGE MIN/MAX	COMPRESSOR			BLOWER MOTOR		TOTAL UNIT FLA	MIN CIRCUIT AMPS	MAX FUSE/HACR
			QTY	RLA	LRA	FLA	HP			
50PC015	208-230/1/60	197/253	1	5.6	29	2.8	0.33	8.4	9.8	15
	265/1/60	238/292	1	4.6	20	2.6	0.33	7.2	8.4	15
50PC018	208-230/1/60	197/253	1	7.4	33	2.8	0.33	10.2	12.1	15
	265/1/60	238/292	1	6.0	28	2.6	0.33	8.6	10.1	15
50PC024	208-230/1/60	197/253	1	13.5	58.3	2.8	0.33	16.3	19.7	30
	265/1/60	238/292	1	9.0	54	2.6	0.33	11.6	13.9	20
	208-230/3/60	197/253	1	7.1	55.4	2.8	0.33	9.9	11.7	15
	460/3/60	414/506	1	3.5	28	2.6	0.33	6.1	7.0	15
50PC030	208-230/1/60	197/253	1	12.8	64	2.8	0.33	15.6	18.8	30
	265/1/60	238/292	1	10.9	60	2.6	0.33	13.5	16.2	25
	208-230/3/60	197/253	1	8.3	58	2.8	0.33	11.1	13.2	20
	460/3/60	414/506	1	5.1	28	2.6	0.33	7.7	9.0	15
50PC036	208-230/1/60	197/253	1	15.4	83.9	4.3	0.50	19.7	23.6	35
	265/1/60	238/292	1	11.6	72	4.1	0.50	15.7	18.6	30
	208-230/3/60	197/253	1	10.4	73	4.3	0.50	14.7	17.3	25
	460/3/60	414/506	1	5.8	38	4.1	0.50	9.9	11.4	15
50PC041	208-230/1/60	197/253	1	15.4	83.9	6.8	0.75	22.2	26.1	40
	208-230/3/60	197/253	1	10.4	73	6.8	0.75	17.2	19.8	30
	460/3/60	414/506	1	5.8	38	5.5	0.75	11.3	12.8	15
50PC042	208-230/1/60	197/253	1	16.7	109	6.8	0.75	23.5	27.7	40
	208-230/3/60	197/253	1	11.2	84	6.8	0.75	18.0	20.8	30
	460/3/60	414/506	1	5.6	44	5.5	0.75	11.1	12.5	15
50PC048	208-230/1/60	197/253	1	19.6	130	6.8	0.75	26.4	31.3	50
	208-230/3/60	197/253	1	13.7	83.1	6.8	0.75	20.5	23.9	35
	460/3/60	414/506	1	6.2	41	5.5	0.75	11.7	13.3	15
50PC060	208-230/1/60	197/253	1	24.7	166	9.1	1.00	33.8	40.0	60
	208-230/3/60	197/253	1	15.6	110	9.1	1.00	24.7	28.6	40
	460/3/60	414/506	1	7.8	52	6.9	1.00	14.7	16.7	20
50PC070	208-230/1/60	197/253	1	28.3	178	9.1	1.00	37.4	44.5	70
	208-230/3/60	197/253	1	19.2	136	9.1	1.00	28.3	33.1	50
	460/3/60	414/506	1	8.7	66	6.9	1.00	15.6	17.8	25

LEGEND

FLA — Full Load Amps
HACR — Heating, Air-Conditioning and Refrigeration
LRA — Locked Rotor Amps
RLA — Rated Load Amps

NOTE: 460V units with Constant Airflow ECM blower motors require a neutral wire (4 wires).

OVERLOAD SETTING VERIFICATION

When a Thermal Overload Relay is included with a unit (see Fig. 30 for location), prior to energizing the unit, visually verify that the amperage setting of the overload relay is set as defined in Table 7, below and Fig. 31-33.

Table 7 — Thermal Overload Settings

Unit Size and Voltage	Set Point (in Amperes)
50PC036 208/230V 1Ph	16
50PC036 265V 1Ph	12.8
50PC042 208/230V 1Ph	17.6

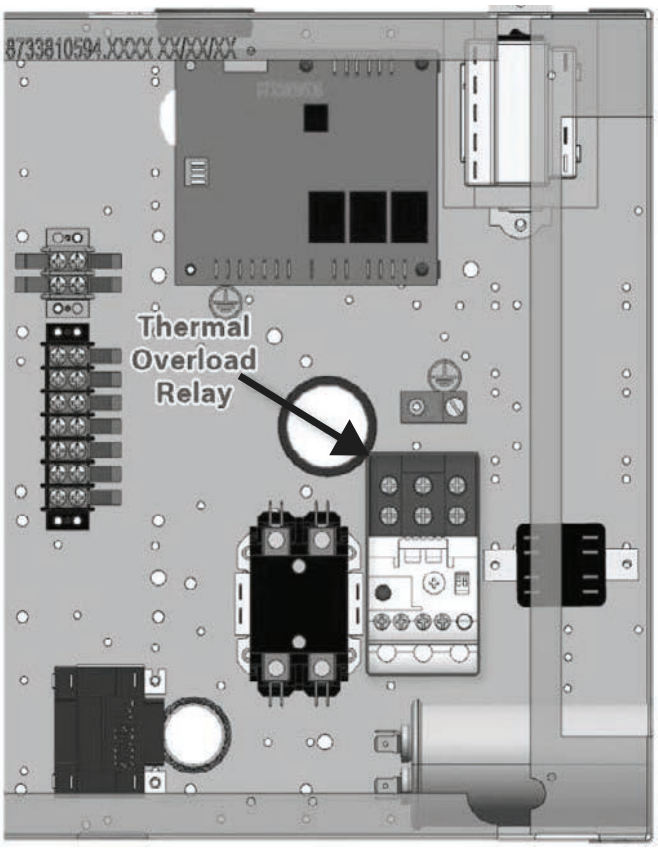

Fig. 30 — Overload Relay Electrical Box Mounting Location

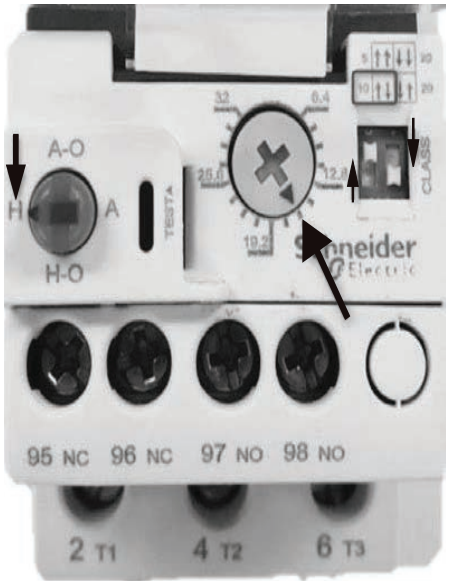

Fig. 31 — 036-1 PSC and ECM Units (Size 036, 208/230V) Overload Settings

Fig. 32 — 036-2 Units (Size 036, 265V) Overload Settings

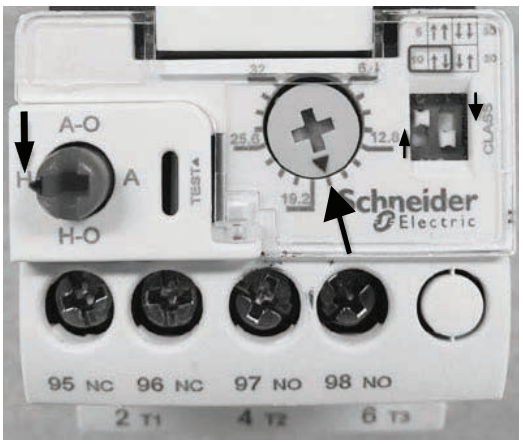

Fig. 33 — 042-1 Units (Size 042, 208/230V) Overload Settings

Step 9 — Wire Control Connections

BETTER B, COMPLETE C, AND DELUXE D CONTROL

Control wiring for units with PSC and Constant Torque blower motors are connected to a terminal block located in the unit electrical box. Refer to the unit wiring diagram for connection details.

⚠ WARNING

To avoid possible injury or death due to electrical shock, open the power supply disconnect switch and secure it in an open position during installation.

⚠ CAUTION

Never route control wiring through the same conduit as power supply wiring. Electrical noise and transients from the power wiring can cause communication issues or damage to the control wiring and connected control components.

Units with Better B, Complete C or Deluxe D control packages can be controlled using the included thermostat inputs (R, O, Y1, C, G) for single stage heat pump thermostat or field-installed DDC (Direct Digital Controls) controls. Note that the reversing valve on the unit is energized when the unit is in the cooling mode. See Fig. 34 for typical thermostat connections.

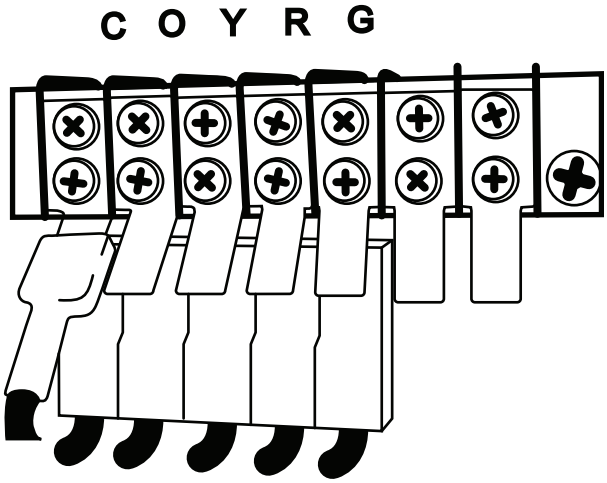

Fig. 34 — Typical Thermostat Connections

Control wiring for units with constant airflow ECM blower motors is routed through a constant airflow ECM interface board. Thermostat input wiring is connected to the 10-pin screw type terminal block on the lower center portion of the ECM Interface Board. In addition to providing a connecting point for thermostat wiring, the interface board also translates thermostat inputs into control commands for the Electronic Commutated Motor (ECM) DC fan motor and displays an LED indication of operating status. Refer to the unit wiring diagrams for complete details. (See Fig. 35.) The thermostat connections and their functions are as follows:

ECM INTERFACE THERMOSTAT CONNECTIONS

- **Y1** First Stage Compressor Operation
- **Y2** Second Stage Compressor Operation
- **G** Fan
- **O** Reversing Valve (energized in cooling)
- **W1** Auxiliary Electric Heat (runs with compressor)
- **EM/W2** Emergency Heat (electric heat only)
- **NC** Transformer 24 VAC Common (extra connection)
- **C1** Transformer 24 VAC Common (primary connection)
- **R** Transformer 24 VAC Hot
- **H** Dehumidification Mode

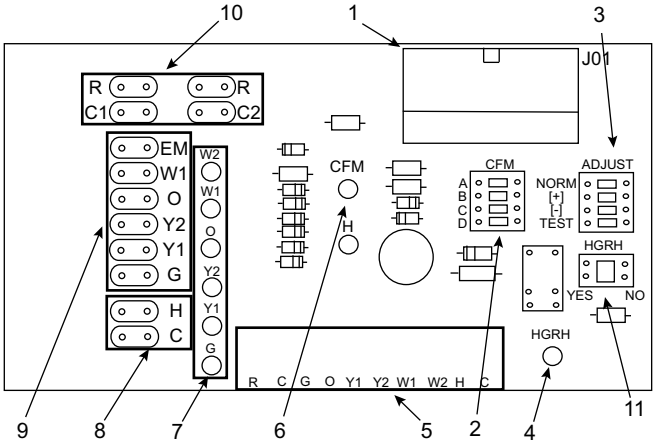

LEGEND

1	Motor harness plug
2	Blower CFM adjustment
3	Motor settings
4	Dehumidification indication
5	Thermostat digital contact inputs
6	CFM count indicator
7	Thermostat input status indication
8	Reheat digital outputs
9	Thermostat outputs
10	24 VAC
11	Dehumidification method selector

Fig. 35 — ECM Interface Board Physical Layout

THERMOSTAT AND DDC SENSORS

Thermostats or DDC space sensors should be located on an interior wall away from supply ducts. Avoid locations subject to direct sunlight or drafts, or external walls. Thermostat wiring should be 18 AWG (American Wire Gage). Refer to the installation instructions for the thermostat for further details.

IMPORTANT: Exceptionally long runs of thermostat wire should be avoided to prevent voltage drops in the control circuit.

HOT GAS REHEAT CONTROL

Units with hot gas reheat (HGRH) will include an additional H terminal on the input terminal board for dehumidification control. To enable a call for dehumidification, a 24V signal must be sent to the H terminal with no voltage applied to the Y1 or O terminals. Any call for cooling (Y1 and O) will override the dehumidification call.

AUXILIARY RELAY (DELUXE D ONLY)

All units with Deluxe D control include an auxiliary relay that can be field wired to enable a field provided loop pump or solenoid valve when there is a call for compressor operation. (See Fig. 15.)

ENERGY MANAGEMENT SWITCH (DELUXE D ONLY)

All units with Deluxe D control include an energy management switch (EMS) relay that can be field wired to disable unit operation when a 24V signal is removed from the relay. Removing the 24V signal causes the relay to open, which cuts 24V power to the unit control circuit. All unit components will be disabled at when the EMS is deactivated. (See Fig. 15.)

NOTE: Units with constant torque ECM motors may experience a 30 second delay between when the EMS is activated and when the blower finally shuts off. Constant torque ECM blowers are factory programmed with a 30 second delay when losing the control signal, to prevent nuisance shut downs.

BOILERLESS HEAT CONTROL (DELUXE D ONLY)

All units with Deluxe D control include a boilerless heat relay that can be field wired to enable an external heat source when the water loop temperature drops below the boilerless heat control set point. (See Fig. 15.)

ALARM OUTPUT (ALL UNITS)

If the unit is being connected to a thermostat or DDC control with an alarm indicator, this connection is made at the unit malfunction output on the Unit Protection Module (UPM). See the Unit Protection Module heading in the Set Up Unit Controls section for further details.

WSHP OPEN CONTROL

WSHP Open is a factory installed DDC control that requires the use of Carrier ZS or WS sensors or the Carrier Equipment Touch or System Touch for space temperature sensing. WSHP Open is not compatible with thermostats or third party temperature sensors.

All WSHP Open wiring is completed at the WSHP Open control board. See Fig. 29 for details. For further instructions on WSHP Open, please visit HVACPartners.com or Carrier.com for the WSHP Open V4 Integration Guide and Points/Properties Guide.

CONTROL TRANSFORMER

All units with the Better B control package include a 75VA transformer and are not available with the HGRH or waterside economizer options. All units with Complete C control and without HGRH or waterside economizer include a 50VA transformer. All units with Complete C control and with HGRH or waterside economizer use a 75VA transformer. All units with Deluxe D control or WSHP Open include a 75VA transformer.

⚠ CAUTION

Exceeding the transformer capacity can result in low control voltage, erratic unit operation or damage to the heat pump.

The VA capacity of the transformer should be considered when applying low voltage accessories, such as shut off valves, thermostats, or DDC controls. Table 8 shows the VA draw of factory-mounted components in the low voltage heat pump. The total VA draw of the heat pump internal components plus any attached accessories must be lower than the VA capacity of the unit control transformer.

Step 10 — Configure Unit Control Components

⚠ WARNING

To avoid possible injury or death due to electrical shock, open the power supply disconnect switch and secure it in an open position during installation.

UNIT PROTECTION MODULE (UPM)

All units with Better B, Complete C, Deluxe D, or WSHP Open are factory provided with a unit protection module (UPM) controls the compressor and has built safeties. See Fig. 36.

Freeze Sensor

The default setting for the freeze limit trip is 30°F for applications without anti-freeze. This can be changed to 15°F for applications with anti-freeze by cutting the R30 resistor located on top of the DIP switch SW1.

⚠ CAUTION

If unit is employing a fresh water system (no anti-freeze protection), it is extremely important to have the Freeze1 R30 resistor set to 30°F in order to shut down the unit at the appropriate leaving-water temperature and protect your heat pump from freezing if a freeze sensor is included.

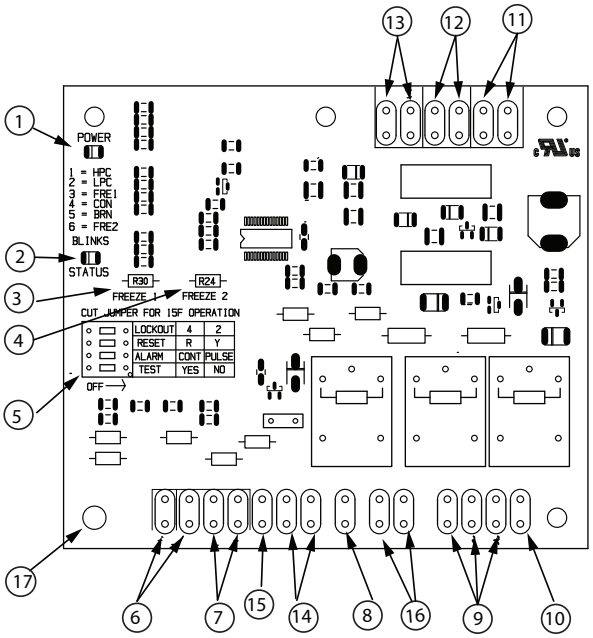

1	Board Power Indicator
2	UPM Status LED Indicator
3	Water Coil Freeze Protection Temperature Selection [R30]
4	Air Coil Freeze Protection Temperature Selection
5	UPM Settings
6	Water Coil Freeze Connection
7	Air Coil Freeze Connection
8	LED Status-Diagnostic Connection
9	24VAC Power Input
10	Compressor Contact Output
11	High Pressure Switch Connection
12	Call for Compressor Y1
13	Low Pressure Switch Connection
14	24VAC Power Common
15	Condensate Overflow Sensor
16	Dry Contact
17	UPM Ground Standoff

Fig. 36 — Unit Protection Module (UPM)

Table 8 — Low Voltage VA Draw

STANDARD CONSTRUCTION		HOT GAS REHEAT OR ECONOMIZER		OPTIONAL COMPONENTS	
Component	**VA**	**Component**	**VA**	**Component**	**VA**
Blower Relay (PSC Motors Only)	6-7	**Total from 'Standard'**	22-26	**Monitor Relay (VA draw per relay)**	6-7
Reversing Valve Solenoid	8-9	**Additional Control Relays**	12-14	**Internal 2 Way Motorized Valve**	7
Compressor Contactor	6-8	**Hot Gas Reheat Solenoid**	8-9		
UPM Board	2	**—**	—		
Total VA Draw	22-26	**Total VA draw**	42-49		

UPM Dip Switch Settings

The DIP switches are used to configure most of the available features of the UPM as follows:

- Lockout mode: two (2) or four (4) strikes
- Reset mode: Y signal or R signal
- Alarm mode: Constant or Pulse
- Test mode: Normal or Test operation

Figure 37 shows the factory default settings for most heat pump applications. However, the unit wiring diagram is the ultimate guide for factory DIP switch default settings. See the Unit Protection Module section in the Troubleshooting section for further details.

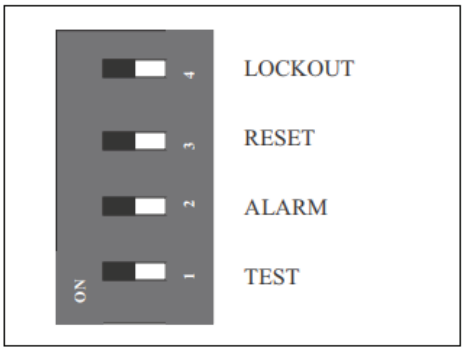

Fig. 37 — Typical DIP Switch Factory Defaults

Table 9 below shows the available options on the UPM board DIP switch banks.

Table 9 — UPM DIP Switch Options

SWITCH NUMBER	DIP SWITCH	ON	OFF
4	LOCKOUT	4	2
3	RESET	R	Y
2	ALARM	CONT	PULSE
1	TEST	YES	NO

⚠ CAUTION

Operation of unit in test mode can lead to accelerated wear and premature failure of components. The "TEST" switch must be set back to "NO" after troubleshooting/servicing.

Alarm Output

Alarm output is normally open (NO) dry contact. If pulse is selected the alarm output will be pulsed. The fault output will depend on the DIP switch setting for ALARM. If it is set to CONST, a constant signal will be produced to indicate a fault has occurred and the unit requires inspection to determine the type of fault. If it is set to PULSE, a pulse signal is produced and a fault code is detected by a remote device indicating the fault. The remote device must have a malfunction detection capability when the UPM board is set to PULSE.

IMPORTANT: If 24 VAC output is needed R must be wired to ALR-COM terminal; 24 VAC will be available to the ALR-OUT terminal when the unit is in the alarm condition.

WATERSIDE ECONOMIZER

Units with the waterside economizer option are not available with the Better B package. When the waterside economizer option is built with the Complete C or Deluxe D controls, it will include an aquastat for economizer control. The aquastat can be adjusted between 20°F and 60°F. When the water loop temperature is below the aquastat set point, the economizer is enabled. The recommended aquastat set point is 55°F. (See Fig. 38.)

BOILERLESS HEAT CONTROL (DELUXE D ONLY)

All units with Deluxe D control include an aquastat for boilerless heat control. The aquastat can be adjusted between 20°F and 60°F. When the water loop temperature is below the aquastat set point, the heat pump heating is disabled and a field provided auxiliary heat can be enabled. The recommended aquastat set point is 55°F. (See Fig. 38.)

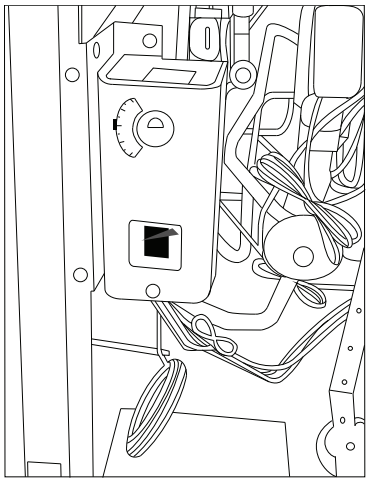

Fig. 38 — Aquastat for Waterside Economizer and Boilerless Control

PRE-START-UP

System Checkout

After completing the installation, and before energizing the unit, the following system checks should be made prior to initial start-up:

1. Verify that the supply voltage to the heat pump is in accordance with the nameplate ratings.
2. Verify that the control transformer is set to the correct voltage for 208/230V units (factory setting is 230V).
3. Make sure that all electrical connections are tight and secure.
4. Check the electrical fusing/breaker and wiring for the correct size.
5. Verify that the low voltage wiring between the thermostat or DDC controls and the unit is correct.
6. Verify that the water piping is complete and correct.
7. Verify that there are no leaks in the external piping or in the internal unit piping. Correct as necessary.
8. Verify that the isolation or flow control valves are open and that any automatic flow control valve or balancing valve are set to the correct setting.
9. Check that the water flow is correct and adjust if necessary.
10. Check the blower for free rotation, and that it is secured to the shaft.
11. Verify that the foam blower shipping support has been removed.
12. Vertical Units Only - Verify that vibration isolation has been provided and that the unit has been installed on a solid structure.

13. Horizontal Units Only - Verify that the hanging brackets have been installed and that the unit is secured to an adequate support structure.
14. Verify that the unit has proper service clearance. Be certain that all access panels are secured in place.
15. Verify that ductwork has been properly fastened to supply and return duct collars.
16. Verify that the ductwork is free from obstruction and that all dampers or registers are open.
17. Make sure return air filters are positioned correctly in the filter rack if removed during installation.
18. Verify that the unit is not in TEST mode.
19. Verify that all control components have been properly configured and that all control components have been wired.
20. For units with WSHP Open, verify that a ZS sensor, WS sensor, Equipment Touch, or System Touch has been installed and that a commissioning interface is available.

CLEAN AIR COIL

To obtain maximum performance, clean the air coil before starting the unit. A ten percent solution of dishwasher detergent and water is recommended for both sides of the coil. Rinse thoroughly with water.

Set Blower Motor Speed

PERMANENT SPLIT CAPACITOR (PSC) MOTOR

All 50PC units are available with PSC blower motors. For 208V, 230V, 265V, or 460V units, the PSC motor has three speed settings. For 575V units, the PSC motor only has one speed setting. See Table 10 for the factory default motor setting. See Table 12 for blower performance by speed setting.

If a motor speed change is required, follow the instructions below:

1. Disconnect power to the heat pump and follow all proper lockout and tagout procedures to ensure that power is removed from the unit.
2. Remove the front access cover.
3. Remove the blower speed wire from the blower relay. Clip the 1/4 in. quick connect from the lead and cap the unused lead.
4. Uncap the desired blower speed wire and terminate with 1/4 in. quick connect. Connect to the blower relay.
5. If the motor is a 460 V motor and the speed is changed from high to medium or low, connect the high speed motor lead to the orange intermediate winding lead instead of simply capping it.

CONSTANT TORQUE (ECM) MOTOR

The 50PC units from size 015 to 070 in 208V, 230V, 265V, or 460V are available with constant torque ECM blower motors. Constant Torque ECM motors have five speed settings. See Table 11 for the factory default motor setting. See Table 13 for blower performance by speed setting.

If a motor speed change is required, follow the instructions below:

1. Disconnect power to the heat pump and follow all proper lockout and tagout procedures to ensure that power is removed from the unit.
2. Remove the blower access panel and access the torque tap wire on the motor.
3. Change the torque tap wire to on the molex plug to one of the five speed settings. (See Fig. 39.)

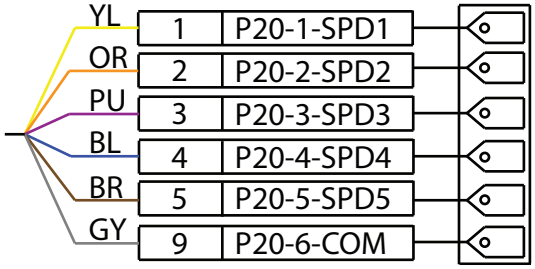

Fig. 39 — Constant Torque ECM Pin Diagram

NOTE: Constant Torque Motors (ECM) are programmed to have a 30s ramp up/down. Contact application engineering for details on applications where immediate ramp down is required.

CONSTANT AIRFLOW (ECM) MOTOR

50PC units from size 015 to 070 in 208V, 230V, 265V, or 460V are available with a constant airflow ECM blower motor. These motors dynamically adjust their power output to precisely match the desired airflow on a pre-programed fan curve. See Table 14 for Constant Airflow ECM Motor Blower performance data. These motors include the following features:

1. **Three Speed Settings**: Units are factory set to "NORM" but can be field adjusted to "+" to increase CFM by 15% or to "-" to reduce CFM by 15%. See the constant airflow ECM motor blower performance table for complete details on available CFM for each unit size (refer to the Wire Control Connections section of this manual).
2. **Low CFM Ventilation:** Units circulate air at 70% of full airflow rate when there is a call for fan only.
3. **Passive Dehumidification**: Reduces airflow during a cooling call when dehumidification is also required. This reduces the sensible heat ratio of the cooling coil and extends cooling run time to dehumidify more effectively (refer to the Wire Control Connections section of this manual).
4. **Test Mode:** Operates the motor at a 70% torque setting. This setting can be used to diagnose programming problems in the motor itself (refer to the Wire Control Connections section of this manual).
5. **CFM Indicator Light**: indicator light blinks for each 100 CFM of air delivered.

NOTE: This blink code is approximate and should not replace test and balance.

Table 10 — PSC Motor Selection

UNIT SIZE 50PCH, PCV	MOTOR HP	TAP 1	TAP 2	TAP 3
007	1/10	LOW	**MED**	HIGH
009	1/10	LOW	MED	**HIGH**
012	1/10	LOW	MED	**HIGH**
015	1/6	LOW	MED	**HIGH**
018	1/4	LOW	**MED**	HIGH
024	1/4	LOW	MED	**HIGH**
030	1/4	LOW	MED	**HIGH**
036	1/2	LOW	MED	**HIGH**
041	3/4	LOW	MED	**HIGH**
042	1/2	LOW	MED	**HIGH**
048	3/4	LOW	MED	**HIGH**
060	1	LOW	MED	**HIGH**
070	1	LOW	MED	**HIGH**

NOTE: Bold type indicates factory default motor setting.

Table 11 — Constant Torque ECM Selection

UNIT SIZE 50PCH, PCV	MOTOR HP	TAP 1	TAP 2	TAP 3	TAP 4	TAP 5
015	1/3	LOW	MED-LOW	**MED**	MED-HI	HIGH
018	1/3	LOW	**MED-LOW**	MED	MED-HI	HIGH
024	1/3	LOW	MED-LOW	MED	**MED-HI**	HIGH
030	1/2	LOW	MED-LOW	MED	MED-HI	**HIGH**
036	1/2	LOW	MED-LOW	**MED**	MED-HI	HIGH
041	3/4	LOW	MED-LOW	MED	**MED-HI**	HIGH
042	3/4	LOW	**MED-LOW**	MED	MED-HI	HIGH
048	1	LOW	MED-LOW	**MED**	MED-HI	HIGH
060	1	LOW	MED-LOW	**MED**	MED-HI	HIGH
070	1	LOW	MED-LOW	**MED**	MED-HI	HIGH

NOTE: Bold type indicates factory default motor setting.

Table 12 — 50PCH,PCV (007-070) PSC Blower Performance

50PC UNIT	FAN SPEED	RATED AIRFLOW	AIRFLOW (cfm) AT EXTERNAL STATIC PRESSURE (in. wg)											
			0.10	0.20	0.30	0.40	0.50	0.60	0.70	0.80	0.90	1.00	1.10	1.20
007	Low	300	370	340	295	250	—	—	—	—	—	—	—	—
	Med		390	360	330	300	260	—	—	—	—	—	—	—
	High		410	380	350	315	280	210	—	—	—	—	—	—
009	Low	350	370	340	295	250	—	—	—	—	—	—	—	—
	Med		390	360	330	300	260	—	—	—	—	—	—	—
	High		410	380	350	315	280	210	—	—	—	—	—	—
012	Low	400	300	290	290	300	—	—	—	—	—	—	—	—
	Med		380	380	360	330	290	—	—	—	—	—	—	—
	High		420	400	380	360	340	320	—	—	—	—	—	—
015	Low	500	500	450	400	—	—	—	—	—	—	—	—	—
	Med		560	520	480	430	400	—	—	—	—	—	—	—
	High		700	650	600	550	500	450	400	—	—	—	—	—
018	Low	600	630	590	560	—	—	—	—	—	—	—	—	—
	Med		810	790	760	730	680	590	—	—	—	—	—	—
	High		1010	970	920	870	800	680	530	—	—	—	—	—
024	Low	800	740	730	700	660	610	—	—	—	—	—	—	—
	Med		830	810	770	730	680	620	—	—	—	—	—	—
	High		1000	950	900	830	750	690	630	—	—	—	—	—
030	Low	950	740	730	700	660	610	—	—	—	—	—	—	—
	Med		830	810	770	730	680	620	—	—	—	—	—	—
	High		1000	950	900	830	750	690	630	—	—	—	—	—
036	Low	1200	1290	1250	1200	1150	1080	1000	—	—	—	—	—	—
	Med		1410	1350	1290	1220	1150	1060	900	—	—	—	—	—
	High		1500	1440	1370	1290	1210	1120	1000	900	—	—	—	—
041	Low	1250	950	900	840	780	720	700	—	—	—	—	—	—
	Med		1200	1140	1080	1010	930	870	820	—	—	—	—	—
	High		1490	1400	1320	1240	1160	1080	990	910	—	—	—	—
042	Low	1400	1210	1210	1190	1160	1120	1080	—	—	—	—	—	—
	Med		1460	1450	1430	1390	1330	1250	1160	—	—	—	—	—
	High		1750	1710	1670	1620	1560	1460	1330	1210	1080	—	—	—
048 (208/230v)	Low	1600	1450	1440	1420	1400	1360	1320	—	—	—	—	—	—
	Med		1700	1670	1630	1580	1530	1470	1400	—	—	—	—	—
	High		1930	1870	1810	1740	1670	1600	1520	1430	1340	—	—	—
048 (460v)	Low	1600	1886	1853	1818	1773	1724	1654	1562	1481	1386	1299	883	—
	Med		2029	1993	1946	1897	1837	1763	1662	1564	1460	1360	1254	—
	High		2225	2170	2105	2032	1961	1885	1793	1666	1541	1435	1298	—
060	Low	2000	1560	1550	1540	1530	1505	1475	1440	1400	—	—	—	—
	Med		1890	1880	1870	1860	1825	1790	1730	1670	1590	1500	—	—
	High		2220	2200	2150	2100	2050	2000	1940	1870	1800	1700	1590	—
070	Low	2100	1570	1560	1550	1540	1530	1505	1475	1440	1400	—	—	—
	Med		1900	1890	1880	1870	1860	1825	1790	1730	1670	1590	1500	—
	High		2240	2220	2200	2150	2100	2050	2000	1940	1870	1800	1700	1590

Table 13 — 50PCH,PCV (015-070) Constant Torque ECM Motor Blower Performance

50PCH, PCV	TAP #	RATED AIRFLOW	AIRFLOW (cfm) AT EXTERNAL STATIC PRESSURE (in. wg)											
			0.10	0.20	0.30	0.40	0.50	0.60	0.70	0.80	0.90	1.00	1.10	1.20
015	1	500	480	440	410	370	340	—	—	—	—	—	—	—
	2		530	490	450	420	380	340	—	—	—	—	—	—
	3		600	560	510	470	440	410	370	—	—	—	—	—
	4		650	600	560	520	500	480	440	380	—	—	—	—
	5		710	660	620	580	550	520	490	470	—	—	—	—
018	1	650	630	590	560	530	490	—	—	—	—	—	—	—
	2		720	700	670	630	600	560	—	—	—	—	—	—
	3		790	770	750	710	670	620	560	—	—	—	—	—
	4		910	890	850	810	740	670	590	520	—	—	—	—
	5		1010	970	920	860	810	750	660	530	—	—	—	—
024	1	850	620	600	570	540	490	—	—	—	—	—	—	—
	2		730	710	670	640	610	550	—	—	—	—	—	—
	3		820	790	760	740	710	670	630	—	—	—	—	—
	4		940	910	880	850	800	740	660	—	—	—	—	—
	5		1070	1010	950	900	840	760	670	—	—	—	—	—
030	1	950	620	600	570	540	490	—	—	—	—	—	—	—
	2		730	710	670	640	610	550	—	—	—	—	—	—
	3		820	790	760	740	710	670	630	—	—	—	—	—
	4		940	910	880	850	800	740	660	—	—	—	—	—
	5		1070	1010	950	900	840	760	670	—	—	—	—	—
036	1	1200	1120	1090	1055	1030	1000	—	—	—	—	—	—	—
	2		1260	1230	1200	1170	1140	1080	—	—	—	—	—	—
	3		1330	1290	1250	1210	1170	1100	1030	—	—	—	—	—
	4		1400	1360	1310	1250	1190	1120	1040	960	—	—	—	—
	5		1470	1420	1360	1290	1220	1140	1050	970	890	—	—	—
041	1	1250	840	770	700	620	—	—	—	—	—	—	—	—
	2		1220	1150	1080	1010	950	—	—	—	—	—	—	—
	3		1430	1360	1280	1200	1130	1080	—	—	—	—	—	—
	4		1540	1460	1380	1300	1220	1140	1060	—	—	—	—	—
	5		1620	1550	1470	1370	1260	1180	1090	1000	—	—	—	—
042	1	1400	1270	1250	1230	1210	—	—	—	—	—	—	—	—
	2		1440	1420	1410	1410	1400	1380	1340	—	—	—	—	—
	3		1540	1530	1510	1500	1490	1470	1430	1350	—	—	—	—
	4		1650	1630	1610	1600	1580	1530	1460	1360	1240	—	—	—
	5		1730	1720	1700	1670	1620	1570	1490	1380	1260	1100	—	—
048	1	1600	1390	1370	1350	1320	—	—	—	—	—	—	—	—
	2		1600	1580	1550	1530	1510	—	—	—	—	—	—	—
	3		1730	1700	1670	1650	1630	1600	1580	1540	—	—	—	—
	4		1830	1810	1780	1760	1740	1710	1670	1600	1520	—	—	—
	5		1930	1910	1880	1860	1830	1780	1720	1640	1540	1420	—	—
060	1	2000	1900	1880	1860	1820	—	—	—	—	—	—	—	—
	2		2000	1970	1950	1920	1890	1860	—	—	—	—	—	—
	3		2110	2090	2060	2030	2010	1970	1940	1910	1880	—	—	—
	4		2220	2200	2170	2140	2110	2080	2050	2060	2050	2000	1920	—
	5		2340	2320	2290	2260	2230	2210	2180	2150	2110	2070	2000	1930
070	1	2100	2050	2010	1970	1930	—	—	—	—	—	—	—	—
	2		2150	2120	2080	2030	1990	1960	—	—	—	—	—	—
	3		2270	2230	2200	2160	2120	2080	2040	2010	1980	—	—	—
	4		2390	2350	2320	2280	2250	2200	2160	2130	2100	2070	2030	—
	5		2520	2480	2450	2420	2380	2330	2290	2260	2220	2170	2100	2020

Table 14 — 50PCH, PVC (015-070) Constant Airflow ECM Motor Blower Performance

MODEL	FAN SPEED	DEFAULT FACTORY MOTOR SETTING	AIRFLOW (CFM) AT EXTERNAL STATIC PRESSURE (in. wg)											
			0.10	0.20	0.30	0.40	0.50	0.60	0.70	0.80	0.90	1.00	1.10	1.20
50PC015	A - Low	500	450	450	450	450	450	450	450	440	440	430	—	—
	A - Normal		500	500	500	500	500	500	500	480	470	460	—	—
	A - Hi		580	580	580	580	580	580	580	570	560	550	—	—
50PC018	B - Low	650	550	540	540	540	540	540	540	530	520	500	—	—
	B - Normal		650	650	650	650	650	650	640	630	610	590	—	—
	B - Hi		750	750	750	750	750	750	740	730	710	690	—	—
50PC024	C - Low	850	720	720	720	720	720	720	720	700	650	560	—	—
	C - Normal		850	850	850	850	850	850	850	850	800	700	—	—
	C - Hi		960	960	960	960	960	960	960	960	880	790	—	—
50PC030	D - Low	950	810	810	810	810	810	810	810	770	720	650	—	—
	D - Normal		950	950	950	950	950	950	950	900	850	780	—	—
	D - Hi		980	980	980	980	980	980	980	950	900	820	—	—
50PC036	A - Low	1200	1020	1020	1020	1020	1020	1020	1000	990	960	930	—	—
	A - Normal		1200	1200	1200	1200	1200	1200	1180	1160	1130	1090	—	—
	A - Hi		1380	1380	1380	1380	1380	1380	1360	1330	1300	1250	—	—
50PC041	A - Low	1280	1100	1100	1100	1100	1100	1090	1070	1050	1020	990	—	—
	A - Normal		1280	1280	1280	1280	1280	1260	1240	1220	1180	1140	—	—
	A - Hi		1300	1300	1300	1300	1300	1280	1260	1240	1200	1160	—	—
50PC042	B - Low	1400	1190	1190	1190	1190	1190	1190	1190	1190	1190	1190	1190	—
	B - Normal		1400	1400	1400	1400	1400	1400	1400	1400	1400	1400	1400	—
	B - Hi		1630	1630	1630	1630	1630	1630	1630	1630	1630	1630	1630	—
50PC048	A - Low	1600	1340	1340	1340	1340	1340	1340	1340	1340	1340	1340	1340	—
	A - Normal		1600	1600	1600	1600	1600	1600	1600	1600	1600	1600	1600	—
	A - Hi		1810	1810	1810	1810	1810	1810	1810	1810	1810	1810	1810	—
50PC060	A - Low	2000	1700	1700	1700	1700	1700	1700	1700	1700	1700	1690	1690	1680
	A - Normal		2000	2000	2000	2000	2000	2000	2000	2000	2000	1980	1980	1980
	A - Hi		2220	2220	2220	2220	2220	2220	2220	2220	2220	2130	2100	2070
50PC070	B - Low	2200	1870	1870	1870	1870	1870	1870	1870	1870	1870	1870	1870	1870
	B - Normal		2200	2200	2200	2200	2200	2200	2200	2200	2200	2200	2200	2200
	B - Hi		2330	2330	2330	2330	2330	2330	2330	2330	2330	2330	2330	2330

NOTES:
1. Air flow is 70% of tabulated values during fan only operation.
2. Air flow is 85% of tabulated value during passive dehumidfication mode when enabled.

System Flushing and Filling

Once the piping is complete, units require final purging and loop charging. A flush cart pump of at least 1.5 hp is needed to achieve adequate flow velocity in the loop to purge air and dirt particles from the loop. Flush the loop in both directions with a high volume of water at a high velocity. Follow the steps below to properly flush the loop:

1. Verify power is off.
2. Fill loop with water from hose through flush cart before using flush cart pump to ensure an even fill. Do not allow the water level in the flush cart tank to drop below the pump inlet line to prevent air from filling the line.
3. Maintain a fluid level in the tank above the return tee to avoid air entering back into the fluid.
4. Shutting off the return valve that connects into the flush cart reservoir will allow 50 psig surges to help purge air pockets. This maintains the pump at 50 psig.
5. To purge, keep the pump at 50 psig until maximum pumping pressure is reached.
6. Open the return valve to send a pressure surge through the loop to purge any air pockets in the piping system.
7. A noticeable drop in fluid level will be seen in the flush cart tank. This is the only indication of air in the loop.
   NOTE: If air is purged from the system while using a 10 in. PVC flush tank, the level drop will only be 1 to 2 in. since liquids are incompressible. If the level drops more than this, flushing should continue since air is still being compressed in the loop. If level is less than 1 to 2 in., reverse the flow.
8. Repeat this procedure until all air is purged.
9. Restore power.

Antifreeze may be added before, during or after the flushing process. However, depending on when it is added in the process, it can be wasted. Refer to the Antifreeze section on page 45 for more detail.

Loop static pressure will fluctuate with the seasons. Pressures will be higher in the winter months than during the warmer months. This fluctuation is normal and should be considered when charging the system initially. Run the unit in either heating or cooling for several minutes to condition the loop to a homogenous temperature.

When complete, perform a final flush and pressurize the loop to a static pressure of 40 to 50 psig for winter months or 15 to 20 psig for summer months.

After pressurization, be sure to remove the plug from the end of the loop pump motor(s) to allow trapped air to be discharged and to ensure the motor housing has been flooded. Be sure the loop flow center provides adequate flow through the unit by checking pressure drop across the heat exchanger. Compare the results to the data in Table 15.

System Flow

FLOW VERIFICATION

The 50PC WSHP units do not include a factory flow switch as standard. It is recommend to field installed a flow switch or special order a flow switch as factory installed to prevent the compressor from operating without loop flow.

IMPORTANT: It is recommended to have a flow switch to prevent the unit from running if water flow is lost.

FLOW REGULATION

Flow regulation can be accomplished by two methods. Most water control valves have a flow adjustment built into the valve. By measuring the pressure drop through the unit heat exchanger, the flow rate can be determined. Adjust the water control valve until the desired flow rate is achieved. Since the pressure constantly varies, two pressure gages may be needed in some applications. See Table 15 for flow rates based on waterside pressure drop.

An alternate method of flow regulation is to install an automatic flow control valve. These valves feature a removable cartridge that controls the maximum flow through the valve assembly. Verify that the water flow control cartridge matches the application flow requirement.

Table 15 — Waterside Pressure Drop

50PC UNIT SIZE	WATER FLOW RATE (gpm)	WATERSIDE PRESSURE DROP (psi)	WATERSIDE PRESSURE DROP WITH 2-WAY FLOW CONTROL VALVE (psi)
007	1.0	0.3	0.5
	2.0	1.1	1.8
	3.0	2.3	3.8
009	1.0	0.5	0.6
	2.0	1.7	2.3
	3.0	3.5	5.0
012	1.5	1.0	1.4
	2.5	2.6	3.6
	3.5	4.8	6.7
015	2.0	1.9	2.5
	3.0	3.9	5.3
	4.0	6.5	9.1
018	2.5	1.1	2.1
	4.0	2.7	5.2
	5.0	4.0	8.0
024	3.0	1.7	2.0
	4.0	2.8	3.4
	6.0	5.8	7.2
030	4.0	2.0	2.6
	6.0	4.2	5.6
	8.0	7.0	9.6
036	4.5	1.6	2.4
	6.0	2.6	4.0
	9.0	5.4	8.6
041	5.0	2.0	3.0
	8.0	4.6	7.2
	11.0	8.2	13.1
042	5.0	2.0	3.0
	8.0	4.6	7.2
	11.0	8.2	13.0
048	6.0	0.8	1.4
	8.0	1.4	2.5
	12.0	2.8	5.4
060	7.5	1.4	2.4
	10.0	2.3	4.1
	15.0	4.8	8.8
070	9.0	2.0	3.4
	12.0	3.4	5.9
	18.0	7.0	12.7

ANTIFREEZE

In areas where entering loop temperatures drop below 40°F or where piping will be routed through areas subject to freezing, antifreeze is needed.

Alcohols and glycols are commonly used as antifreeze agents. Freeze protection should be maintained to 15°F below the lowest expected entering loop temperature. For example, if the lowest expected entering loop temperature is 30°F, the leaving loop temperature would be 22 to 25°F. Therefore, the freeze protection should be at 15°F (30°F - 15°F = 15°F).

NOTE: All alcohols should be pre-mixed and pumped from a reservoir outside of the building or introduced under water level to prevent fuming.

Calculate the total volume of fluid in the piping system. (See Table 16.) Use the percentage by volume in Table 17 to determine the amount of antifreeze to use. Antifreeze concentration should be checked from a well-mixed sample using a hydrometer to measure specific gravity.

Table 16 — Approximate Fluid Volume (gal.) per 100 Ft of Pipe

PIPE	DIAMETER (in.)	VOLUME (gal.)
Copper	1	4.1
	1.25	6.4
	1.5	9.2
Rubber Hose	1	3.9
Polyethylene	3/4 IPS SDR11	2.8
	1 IPS SDR11	4.5
	1 1/4 IPS SDR11	8.0
	1/2 IPS SDR11	10.9
	2 IPS SDR11	18.0
	1 1/4 IPS SCH40	8.3
	1 1/2 IPS SCH40	10.9
	2 IPS SCH40	17.0

LEGEND

IPS — Internal Pipe Size
SCH — Schedule
SDR — Standard Dimensional Ratio

NOTE: Volume of heat exchanger is approximately 1.0 gallon.

Table 17 — Antifreeze Percentages by Volume

ANTIFREEZE	MINIMUM TEMPERATURE FOR FREEZE PROTECTION (°F)			
	10	15	20	25
Methanol (%)	25	21	16	10
100% USP Food Grade Propylene Glycol (%)	38	30	22	15
Ethanol (%)	29	25	20	14

FREEZE PROTECTION SELECTION

The 30°F FP1 factory setting (water) should be used to avoid freeze damage to the unit.

Once antifreeze is selected, the JW3 jumper (FP1) should be clipped on the control to select the low temperature (antifreeze 15°F) set point to avoid nuisance faults.

START-UP

Use the procedure outlined below to initiate proper unit start-up.

Operating Limits

ENVIRONMENT

This equipment is designed for indoor installation only. Extreme variations in temperature, humidity and corrosive water or air will adversely affect the unit performance, reliability and service life.

NOTE: Two factors determine the operating limits of a unit: entering-air temperature and water temperature. Whenever any of these factors are at a minimum or maximum level, the other two factors must be at a normal level to ensure proper unit operation. (See Tables 19-31.)

POWER SUPPLY

A voltage variation of ± 10% of nameplate utilization voltage is acceptable.

UNIT STARTING CONDITIONS

Depending on the model, units should start and operate with entering water temperature temperatures between 20°F and 110°F and entering air temperatures between 45°F and 95°F. Water flow rates should be between 1.5 and 3.0 GPM/nominal cooling ton.

NOTE: These operating limits are not normal or continuous operating conditions. Assume that such a start-up is for the purpose of bringing the building space up to occupancy temperature. See Table 18 for operating limits.

Table 18 — Operating Limits

AIR LIMITS	STANDARD UNIT	EXTENDED RANGE OPTION
COOLING		
Minimum cooling entering air db/wb F	68/57	68/57
Maximum cooling entering air db/wb F	95/85	95/85
Minimum cooling entering fluid temp. F	70	50
Water loop typical coil entering fluid range temperature F	70/90	70/90
Maximum cooling entering fluid temperature F	110	110
HEATING		
Minimum heating entering air db F	50	50
Maximum heating entering air db F	80	80
Normal water coil entering fluid range F	50-80	25-80*
Minimum water coil entering Fluid F	50	25*

LEGEND

DB — Dry Bulb
WB — Wet Bulb

*Antifreeze solution is required at these fluid temperatures.

Start-Up Procedure

⚠ WARNING

When the disconnect switch is closed, high voltage is present in some areas of the electrical panel. Exercise caution when working with the energized equipment. Failure to heed this warning could lead to personal injury.

1. Restore power to system.
2. Turn thermostat blower position to ON or use the DDC interface to enable the unit blower. The blower should start.
3. Balance airflow at diffusers/dampers.
4. Adjust all water valves to the full open position.
5. Use the thermostat or DDC control to enable the compressor by placing the unit in cooling mode.
6. Verify compressor operation. If scroll compressor, verify compressor rotation direction.

SCROLL COMPRESSOR ROTATION

It is important to be certain compressor is rotating in the proper direction. To determine whether or not compressor is rotating in the proper direction:

1. Connect service gages to suction and discharge pressure fittings.
2. Energize the compressor by using the thermostat or DDC control to put the unit in cooling mode.
3. The suction pressure should drop and the discharge pressure should rise, as is normal on any start-up.

If the suction pressure does not drop and the discharge pressure does not rise to normal levels:

1. Turn off power to the unit. Install disconnect tag.
2. Reverse any two of the unit power leads.
3. Reapply power to the unit and verify pressures are correct. The suction and discharge pressure levels should now move to their normal start-up levels.

When the compressor is rotating in the wrong direction, the unit makes more noise and does not provide cooling.

After a few minutes of reverse operation, the scroll compressor internal overload protection will open, thus activating the unit lockout. This requires a manual reset. To reset the lockout, turn the thermostat on and then off or power cycle the unit power feed.

NOTE: There is a 5-minute time delay before the compressor will re-start.

COOLING MODE START-UP

1. Using the thermostat or DDC control, operate the unit in the cooling cycle. Refer to Table 18 for operating limits. Allow the unit to run for a minimum of five minutes and record the operating data.
2. Check for water leaks and vibration.
3. Check for cool air delivery at unit grille a few minutes after the unit has begun to operate.
4. Verify that the compressor is on and that the water flow rate is correct by measuring pressure drop through the heat exchanger using P/T plugs. Check the elevation and cleanliness of the condensate lines; any dripping could be a sign of a blocked line. Be sure the condensate trap includes a water seal.
5. Check the temperature of both supply and discharge water. Compare to Tables 19-31. If temperature is within range, proceed. If temperature is outside the range, check the cooling refrigerant pressures in Tables 19-31.
6. Check air temperature drop across the coil when compressor is operating. Air temperature drop should be between 15°F and 25°F.
7. Disable cooling mode and wait a period of 5 minutes to allow system pressures to equalize.

HEATING MODE START-UP

1. After waiting for a period of 5 minutes after the cooling cycle, use the thermostat or DDC control to operate the unit in the heating cycle. Refer to Table 18 for operating limits. Allow the unit to run for a minimum of five minutes and record the operating data.
2. Check for water leaks and vibration.
3. Check for warm air delivery at unit grille a few minutes after the unit has begun to operate.
4. Verify that the compressor is on and that the water flow rate is correct by measuring pressure drop through the heat exchanger using P/T plugs.
5. Check the temperature of both supply and discharge water. Compare to Tables 19-31. If temperature is within range, proceed. If temperature is outside the range, check the cooling refrigerant pressures in Tables 19-31.
6. Check air temperature rise across the coil when compressor is operating. Air temperature rise should be between 20°F and 30°F.
7. Disable heating mode.

Table 19 — 50PC007 Typical Unit Operating Pressures and Temperatures

ENTERING WATER TEMP (°F)	WATER FLOW (GPM/TON)	COOLING				HEATING			
		Suction Pressure (PSIG)	Discharge Pressure (PSIG)	Water Temp Rise (°F)	Air Temp Drop (°F) DB	Suction Pressure (PSIG)	Discharge Pressure (PSIG)	Water Temp. Rise (°F)	Air Temp. Drop (°F)
30	1.4	—	—	—	—	58-68	275-285	5-6	19-23
	1.9	—	—	—	—	62-72	280-290	3-4	20-24
40	1.4	106-129	146-178	17-21	18-22	71-81	290-300	7-8	22-26
	1.9	102-124	133-162	10-13	19-23	77-87	296-306	4-5	23-27
50	1.4	115-141	180-220	17-20	17-21	88-98	308-318	7-8	25-29
	1.9	111-135	163-200	10-12	18-23	95-105	315-325	4-5	27-31
60	1.4	124-152	213-261	16-19	17-21	105-115	324-334	9-10	28-32
	1.9	120-146	194-237	10-12	18-22	114-124	331-341	5-6	30-34
70	1.4	134-163	247-302	15-19	17-20	125-135	340-350	10-11	32-36
	1.9	128-187	225-275	9-11	18-21	135-145	348-358	6-7	33-37
80	1.4	143-175	281-343	14-18	16-20	146-156	356-366	12-13	35-39
	1.9	137-168	255-312	9-11	17-21	159-169	366-376	7-8	37-41
90	1.4	152-186	315-385	14-17	16-19	169-179	374-384	13-14	39-43
	1.9	146-179	286-350	8-10	17-20	186-196	386-396	8-9	41-45
100	1.4	161-197	349-426	13-16	15-19	—	—	—	—
	1.9	155-190	317-387	8-10	16-20	—	—	—	—

LEGEND

DB — Dry Bulb
— — No Operation in This Temperature Range

Table 20 — 50PC009 Typical Unit Operating Pressures and Temperatures

ENTERING WATER TEMP (°F)	WATER FLOW (GPM/TON)	COOLING				HEATING			
		Suction Pressure (PSIG)	Discharge Pressure (PSIG)	Water Temp Rise (°F)	Air Temp Drop (°F) DB	Suction Pressure (PSIG)	Discharge Pressure (PSIG)	Water Temp. Rise (°F)	Air Temp. Drop (°F)
30	1.8	—	—	—	—	91-111	251-307	5-6	21-25
	2.4	—	—	—	—	95-116	256-313	3-4	22-26
40	1.8	112-137	144-176	14-17	22-27	107-130	267-327	6-7	24-29
	2.4	106-130	137-167	10-12	23-28	112-137	273-333	4-5	25-30
50	1.8	116-142	177-217	13-16	21-26	123-150	284-347	7-9	27-33
	2.4	111-135	169-206	9-12	22-27	129-158	289-353	5-6	28-34
60	1.8	121-148	211-258	13-16	21-26	139-170	300-366	8-10	30-37
	2.4	115-140	200-245	9-11	22-27	146-179	306-374	6-7	32-39
70	1.8	126-154	245-299	13-15	20-25	156-190	316-386	9-12	33-41
	2.4	119-146	232-284	9-11	21-26	163-200	322-394	7-8	35-43
80	1.8	130-159	278-340	12-15	20-24	172-210	332-406	11-13	36-44
	2.4	124-151	264-323	9-11	21-26	180-220	339-414	8-9	38-47
90	1.8	135-165	312-381	12-15	19-24	188-230	349-426	12-15	39-48
	2.4	128-157	296-362	9-10	20-25	197-241	355-434	8-10	41-51
100	1.8	140-171	345-422	12-14	19-23	—	—	—	—
	2.4	133-162	328-401	8-10	20-24	—	—	—	—

LEGEND

DB — Dry Bulb
— — No Operation in This Temperature Range

Table 21 — 50PC012 Typical Unit Operating Pressures and Temperatures

ENTERING WATER TEMP (°F)	WATER FLOW (GPM/TON)	COOLING				HEATING			
		Suction Pressure (PSIG)	Discharge Pressure (PSIG)	Water Temp Rise (°F)	Air Temp Drop (°F) DB	Suction Pressure (PSIG)	Discharge Pressure (PSIG)	Water Temp. Rise (°F)	Air Temp. Drop (°F)
30	2.6	—	—	—	—	73-89	266-325	5-6	15-18
	3.0	—	—	—	—	77-94	272-333	3-4	16-19
40	2.6	117-143	189-231	14-17	18-22	86-105	279-341	6-7	17-21
	3.0	112-137	178-217	8-9	19-24	90-110	286-350	4-5	18-22
50	2.6	126-154	221-270	14-17	18-21	162-198	293-358	7-8	20-24
	3.0	121-148	207-253	8-9	19-23	170-208	300-366	5-6	21-25
60	2.6	131-160	252-308	13-16	17-21	110-134	306-374	8-10	22-27
	3.0	125-153	237-290	8-9	18-22	115-141	314-383	6-7	23-29
70	2.6	135-165	284-347	13-16	17-20	122-150	320-391	9-11	24-30
	3.0	130-158	266-326	7-9	18-22	129-157	327-400	6-8	26-32
80	2.6	140-171	320-391	13-16	16-20	134-164	333-407	11-13	27-33
	3.0	134-164	300-367	7-9	17-21	141-172	341-417	7-9	28-35
90	2.6	144-176	360-440	13-16	16-19	147-179	347-424	12-14	29-36
	3.0	138-169	338-414	7-9	17-21	154-188	355-434	8-10	31-38
100	2.6	149-182	405-495	13-15	15-19	—	—	—	—
	3.0	143-174	381-465	7-9	16-20	—	—	—	—

LEGEND

DB — Dry Bulb
— — No Operation in This Temperature Range

Table 22 — 50PC015 Typical Unit Operating Pressures and Temperatures

ENTERING WATER TEMP (°F)	WATER FLOW (GPM/TON)	COOLING				HEATING			
		Suction Pressure (PSIG)	Discharge Pressure (PSIG)	Water Temp Rise (°F)	Air Temp Drop (°F) DB	Suction Pressure (PSIG)	Discharge Pressure (PSIG)	Water Temp. Rise (°F)	Air Temp. Drop (°F)
30	2.8	—	—	—	—	74-90	244-299	3-4	13-15
	3.8	—	—	—	—	78-95	251-306	2-3	13-16
40	2.8	122-149	183-224	14-18	19-23	87-106	257-314	4-5	15-18
	3.8	117-143	172-210	8-10	20-24	91-111	263-322	3-3	16-19
50	2.8	131-160	214-261	14-18	18-22	164-201	269-329	5-6	17-20
	3.8	126-154	201-245	8-10	19-24	173-211	276-337	3-4	18-22
60	2.8	136-166	244-298	14-17	18-22	111-136	282-344	6-7	19-23
	3.8	131-160	230-281	8-10	19-23	117-143	289-353	4-5	20-24
70	2.8	141-172	275-336	14-17	17-21	124-152	294-360	7-8	21-25
	3.8	135-165	258-316	8-10	18-22	131-160	302-369	5-6	22-27
80	2.8	145-178	310-378	14-17	17-20	136-166	307-375	8-9	23-28
	3.8	140-171	291-356	8-10	18-22	143-175	314-384	5-6	24-30
90	2.8	150-183	349-426	14-17	16-20	149-182	319-390	8-10	25-30
	3.8	144-176	238-401	8-10	17-21	156-191	327-400	6-7	26-32
100	2.8	155-189	392-480	13-16	16-19	—	—	—	—
	3.8	149-182	369-451	8-9	17-21	—	—	—	—

LEGEND

DB — Dry Bulb
— — No Operation in This Temperature Range

Table 23 — 50PC018 Typical Unit Operating Pressures and Temperatures

ENTERING WATER TEMP (°F)	WATER FLOW (GPM/TON)	COOLING				HEATING			
		Suction Pressure (PSIG)	Discharge Pressure (PSIG)	Water Temp Rise (°F)	Air Temp Drop (°F) DB	Suction Pressure (PSIG)	Discharge Pressure (PSIG)	Water Temp. Rise (°F)	Air Temp. Drop (°F)
30	3	—	—	—	—	58-68	270-290	5-6	19-23
	5	—	—	—	—	62-72	275-295	3-4	20-24
40	3	122-140	220-240	17-19	21-25	71-81	285-305	7-8	22-26
	5	120-138	192-212	10-12	22-26	77-87	291-311	4-5	23-27
50	3	123-141	236-256	15-17	21-25	88-98	303-323	7-8	25-29
	5	122-140	214-234	9-11	21-25	95-105	310-330	4-5	27-31
60	3	124-142	268-288	15-17	20-24	105-115	319-339	9-10	28-32
	5	123-141	246-266	9-11	21-25	114-124	326-346	5-6	30-34
70	3	126-144	305-325	14-16	20-24	125-135	335-355	10-11	32-36
	5	125-143	282-302	8-10	20-24	135-145	343-363	6-7	33-37
80	3	128-146	346-366	14-16	19-23	146-156	351-371	12-13	35-39
	5	127-145	323-343	8-10	20-24	159-169	361-381	7-8	37-41
90	3	130-148	392-412	14-16	19-23	169-179	369-389	13-14	39-43
	5	129-147	368-388	8-10	19-23	186-196	381-401	8-9	41-45
100	3	132-150	442-462	14-16	18-22	—	—	—	—
	5	131-149	418-438	8-10	18-22	—	—	—	—

LEGEND

DB — Dry Bulb
— — No Operation in This Temperature Range

Table 24 — 50PC024 Typical Unit Operating Pressures and Temperatures

ENTERING WATER TEMP (°F)	WATER FLOW (GPM/TON)	COOLING				HEATING			
		Suction Pressure (PSIG)	Discharge Pressure (PSIG)	Water Temp Rise (°F)	Air Temp Drop (°F) DB	Suction Pressure (PSIG)	Discharge Pressure (PSIG)	Water Temp. Rise (°F)	Air Temp. Drop (°F)
30	4	—	—	—	—	69-79	276-296	5-6	19-23
	6	—	—	—	—	73-83	281-301	3-4	20-24
40	4	123-140	216-234	17-19	22-26	83-93	291-311	7-8	22-26
	6	122-139	196-214	11-13	22-26	87-97	296-316	4-5	23-27
50	4	124-141	234-252	15-17	21-25	100-110	310-330	7-8	25-29
	6	123-140	218-236	10-12	22-26	106-116	316-336	5-6	26-30
60	4	126-143	269-287	15-17	21-25	118-128	329-349	9-10	28-32
	6	125-142	252-270	10-12	21-25	125-135	336-356	6-7	29-33
70	4	128-145	307-325	15-17	20-24	139-149	347-367	10-11	31-35
	6	127-144	290-308	9-11	20-24	147-157	354-374	7-8	33-37
80	4	130-147	349-367	14-16	19-23	160-170	364-384	11-12	35-39
	6	129-146	333-351	9-11	20-24	171-181	372-392	8-9	36-40
90	4	132-149	396-414	14-16	19-23	185-195	382-402	13-14	38-42
	6	131-148	380-398	9-11	19-23	199-209	391-411	9-10	40-44
100	4	134-151	449-467	14-16	18-22	—	—	—	—
	6	133-150	432-450	9-11	18-22	—	—	—	—

LEGEND

DB — Dry Bulb
— — No Operation in This Temperature Range

Table 25 — 50PC030 Typical Unit Operating Pressures and Temperatures

ENTERING WATER TEMP (°F)	WATER FLOW (GPM/TON)	COOLING				HEATING			
		Suction Pressure (PSIG)	Discharge Pressure (PSIG)	Water Temp Rise (°F)	Air Temp Drop (°F) DB	Suction Pressure (PSIG)	Discharge Pressure (PSIG)	Water Temp. Rise (°F)	Air Temp. Drop (°F)
30	4	—	—	—	—	64-74	289-309	7-8	19-23
	7	—	—	—	—	70-80	295-315	4-5	20-24
40	4	120-138	233-251	20-22	21-25	77-87	305-325	8-9	22-26
	7	118-136	200-218	11-13	22-26	84-94	314-334	5-6	23-27
50	4	121-139	249-267	18-20	21-25	94-104	327-347	9-10	25-29
	7	120-138	223-241	10-12	21-25	103-113	336-356	5-6	27-31
60	4	123-141	283-301	18-20	21-25	111-121	344-364	10-11	28-32
	7	122-140	257-275	10-12	21-25	122-132	354-374	6-7	30-34
70	4	125-143	323-341	17-19	20-24	130-140	361-381	12-13	32-36
	7	123-141	295-313	10-12	20-24	143-153	373-393	7-8	34-38
80	4	127-145	366-384	17-19	19-23	150-160	378-398	14-15	35-39
	7	126-144	341-359	9-11	19-23	167-177	392-412	8-9	38-42
90	4	129-147	414-432	17-19	19-23	173-183	397-417	16-17	39-43
	7	128-146	388-406	9-11	19-23	193-203	413-433	9-10	41-45
100	4	131-149	466-484	17-19	18-22	—	—	—	—
	7	130-148	441-459	9-11	18-22	—	—	—	—

LEGEND

DB — Dry Bulb
— — No Operation in This Temperature Range

Table 26 — 50PC036 Typical Unit Operating Pressures and Temperatures

ENTERING WATER TEMP (°F)	WATER FLOW (GPM/TON)	COOLING				HEATING			
		Suction Pressure (PSIG)	Discharge Pressure (PSIG)	Water Temp Rise (°F)	Air Temp Drop (°F) DB	Suction Pressure (PSIG)	Discharge Pressure (PSIG)	Water Temp. Rise (°F)	Air Temp. Drop (°F)
30	4.5	—	—	—	—	60-70	278-298	7-8	17-21
	9.0	—	—	—	—	66-76	285-305	3-4	18-22
40	4.5	119-135	226-250	23-25	22-26	72-82	292-312	9-10	19-23
	9.0	116-132	183-207	11-13	23-27	81-91	302-322	4-5	21-25
50	4.5	121-137	259-283	22-24	21-25	86-96	308-328	10-11	22-26
	9.0	118-134	214-238	11-13	22-26	97-107	319-339	5-6	24-28
60	4.5	123-139	295-319	22-24	21-25	101-111	323-343	12-13	25-29
	9.0	120-136	248-272	11-13	21-25	115-125	335-355	6-7	27-31
70	4.5	124-140	335-359	22-24	20-24	117-127	337-357	14-15	28-32
	9.0	122-138	285-309	10-12	21-25	135-145	352-372	7-8	31-35
80	4.5	126-142	378-402	21-23	20-24	135-145	352-372	16-17	31-35
	9.0	124-140	327-351	10-12	20-24	157-167	370-390	8-9	34-38
90	4.5	128-144	425-449	20-22	19-23	155-165	369-389	17-18	34-38
	9.0	126-142	372-396	10-12	20-24	181-191	390-410	9-10	38-42
100	4.5	130-146	477-501	20-22	19-23	—	—	—	—
	9.0	128-144	423-447	10-12	19-23	—	—	—	—

LEGEND

DB — Dry Bulb
— — No Operation in This Temperature Range

Table 27 — 50PC041 Typical Unit Operating Pressures and Temperatures

ENTERING WATER TEMP (°F)	WATER FLOW (GPM/TON)	COOLING				HEATING			
		Suction Pressure (PSIG)	Discharge Pressure (PSIG)	Water Temp Rise (°F)	Air Temp Drop (°F) DB	Suction Pressure (PSIG)	Discharge Pressure (PSIG)	Water Temp. Rise (°F)	Air Temp. Drop (°F)
30	6	—	—	—	—	62-82	326-346	8-9	19-23
	9	—	—	—	—	68-88	334-354	4-5	21-25
40	6	120-136	197-227	17-19	22-26	74-94	341-361	9-10	22-26
	9	119-135	176-206	11-13	22-26	82-102	351-371	5-6	23-27
50	6	122-138	229-259	16-18	21-25	88-108	357-377	11-12	24-28
	9	121-137	207-237	11-13	22-26	98-118	369-389	6-7	27-31
60	6	124-140	264-294	16-18	21-25	102-122	347-394	12-13	28-32
	9	123-139	241-271	10-12	21-25	116-136	390-410	7-8	30-34
70	6	126-142	303-333	15-17	20-24	118-138	393-413	14-15	31-35
	9	125-141	278-308	10-12	21-25	135-155	412-432	8-9	33-37
80	6	128-144	346-376	15-17	20-24	136-156	413-433	16-17	34-38
	9	127-143	321-351	10-12	20-24	157-177	436-456	9-10	37-41
90	6	131-147	393-423	15-17	19-23	156-176	434-454	18-19	37-41
	9	130-146	366-396	10-12	20-24	181-201	461-481	10-11	41-45
100	6	133-149	443-473	14-16	19-23	—	—	—	—
	9	132-148	416-446	9-11	19-23	—	—	—	—

LEGEND

DB — Dry Bulb
— — No Operation in This Temperature Range

Table 28 — 50PC042 Typical Unit Operating Pressures and Temperatures

ENTERING WATER TEMP (°F)	WATER FLOW (GPM/TON)	COOLING				HEATING			
		Suction Pressure (PSIG)	Discharge Pressure (PSIG)	Water Temp Rise (°F)	Air Temp Drop (°F) DB	Suction Pressure (PSIG)	Discharge Pressure (PSIG)	Water Temp. Rise (°F)	Air Temp. Drop (°F)
30	6	—	—	—	—	65-75	280-304	6-7	18-22
	10	—	—	—	—	69-79	285-309	3-4	19-23
40	6	120-136	209-233	18-20	21-25	77-87	294-318	7-8	20-24
	10	119-135	182-206	11-13	22-26	83-93	301-325	4-5	21-25
50	6	122-138	241-265	18-20	21-25	91-101	309-333	8-9	23-27
	10	120-136	212-236	11-13	21-25	99-109	316-340	5-6	24-28
60	6	124-140	276-300	17-19	20-24	107-117	322-346	10-11	26-30
	10	122-138	245-269	10-12	21-25	116-126	330-354	6-7	27-31
70	6	126-142	315-339	17-19	20-24	123-133	336-360	11-12	28-32
	10	124-140	282-306	10-12	20-24	136-146	346-370	7-8	30-34
80	6	127-143	357-381	17-19	19-23	142-152	351-375	13-14	31-35
	10	126-142	323-347	10-12	20-24	158-168	363-387	8-9	33-37
90	6	129-145	403-427	17-19	19-23	163-173	367-391	14-15	34-38
	10	128-144	369-393	9-11	19-23	182-192	380-404	9-10	37-41
100	6	—	—	—	—	—	—	—	—
	10	129-145	418-442	10-12	19-23	—	—	—	—

LEGEND

DB — Dry Bulb
— — No Operation in This Temperature Range

Table 29 — 50PC048 Typical Unit Operating Pressures and Temperatures

ENTERING WATER TEMP (°F)	WATER FLOW (GPM/TON)	COOLING				HEATING			
		Suction Pressure (PSIG)	Discharge Pressure (PSIG)	Water Temp Rise (°F)	Air Temp Drop (°F) DB	Suction Pressure (PSIG)	Discharge Pressure (PSIG)	Water Temp. Rise (°F)	Air Temp. Drop (°F)
30	6	—	—	—	—	62-82	326-346	8-9	19-23
	12	—	—	—	—	68-88	334-354	4-5	21-25
40	6	113-129	216-236	22-24	22-26	74-94	341-361	9-10	22-26
	12	110-126	179-199	11-13	22-26	82-102	351-371	5-6	23-27
50	6	115-131	247-267	22-24	21-25	88-108	357-377	11-12	24-28
	12	112-128	208-228	11-13	22-26	98-118	369-389	6-7	27-31
60	6	116-132	282-302	21-23	21-25	102-122	374-394	12-13	28-32
	12	114-130	240-260	10-12	21-25	116-136	390-410	7-8	30-34
70	6	119-135	320-340	20-22	20-24	118-138	393-413	14-15	31-35
	12	116-132	276-296	10-12	21-25	135-155	412-432	8-9	33-37
80	6	121-137	361-381	20-22	20-24	136-156	413-433	16-17	34-38
	12	118-134	315-335	10-12	20-24	157-177	436-456	9-10	37-41
90	6	122-138	406-426	20-22	19-23	156-176	434-454	18-19	37-41
	12	120-136	358-378	10-12	20-24	181-201	461-481	10-11	41-45
100	6	125-141	454-474	19-21	19-23	—	—	—	—
	12	122-138	406-426	10-12	19-23	—	—	—	—

LEGEND

DB — Dry Bulb
— — No Operation in This Temperature Range

Table 30 — 50PC060 Typical Unit Operating Pressures and Temperatures

ENTERING WATER TEMP (°F)	WATER FLOW (GPM/TON)	COOLING				HEATING			
		Suction Pressure (PSIG)	Discharge Pressure (PSIG)	Water Temp Rise (°F)	Air Temp Drop (°F) DB	Suction Pressure (PSIG)	Discharge Pressure (PSIG)	Water Temp. Rise (°F)	Air Temp. Drop (°F)
30	8	—	—	—	—	68-84	256-313	5-7	19-23
	12	—	—	—	—	73-89	261-319	4-5	20-25
40	8	113-138	173-212	18-22	19-23	81-99	277-339	7-8	22-26
	12	110-134	162-198	12-14	20-24	86-105	283-346	5-6	23-28
50	8	116-142	207-253	17-21	19-23	93-114	299-365	8-9	24-29
	12	112-137	193-236	12-14	19-24	99-121	305-373	6-7	25-31
60	8	118-145	240-293	17-21	18-23	106-129	321-392	9-11	26-32
	12	115-140	224-274	11-14	19-23	113-138	327-400	7-8	28-34
70	8	121-148	273-334	17-21	18-22	118-145	342-418	10-12	29-35
	12	117-143	255-312	11-14	19-23	126-154	349-427	8-9	30-37
80	8	123-151	307-375	16-20	18-22	131-160	364-444	11-14	31-38
	12	120-146	287-350	11-13	19-23	139-170	371-454	8-10	33-40
90	8	126-154	340-416	16-20	18-22	143-175	385-471	12-15	33-41
	12	122-149	318-388	11-13	18-22	152-186	393-480	9-11	35-43
100	8	128-157	373-456	16-19	17-21	—	—	—	—
	12	125-152	349-426	11-13	18-22	—	—	—	—

LEGEND

DB — Dry Bulb
— — No Operation in This Temperature Range

Table 31 — 50PC070 Typical Unit Operating Pressures and Temperatures

ENTERING WATER TEMP (°F)	WATER FLOW (GPM/TON)	COOLING				HEATING			
		Suction Pressure (PSIG)	Discharge Pressure (PSIG)	Water Temp Rise (°F)	Air Temp Drop (°F) DB	Suction Pressure (PSIG)	Discharge Pressure (PSIG)	Water Temp. Rise (°F)	Air Temp. Drop (°F)
30	12	—	—	—	—	68-84	256-313	5-7	19-23
	16	—	—	—	—	73-89	261-319	4-5	20-25
40	12	117-143	182-222	11-14	21-26	81-99	277-339	7-8	22-26
	16	114-139	170-208	15-18	22-27	86-105	283-346	5-6	23-28
50	12	120-147	215-263	14-17	20-25	93-114	299-365	8-9	24-29
	16	117-143	201-246	11-13	21-26	99-121	305-373	6-7	25-31
60	12	123-150	248-304	14-17	20-24	106-129	321-392	9-11	26-32
	16	119-146	232-284	10-13	21-25	113-138	327-400	7-8	28-34
70	12	126-154	282-344	14-17	19-24	118-145	342-418	10-12	29-35
	16	122-149	263-322	10-13	20-25	126-154	349-427	8-9	30-37
80	12	129-157	315-385	13-16	19-23	131-160	364-444	11-14	31-38
	16	125-153	294-360	10-12	19-24	139-170	371-454	8-10	33-40
90	12	132-161	348-426	13-16	18-22	143-175	385-471	12-15	33-41
	16	128-156	326-398	10-12	19-23	152-186	393-480	9-11	35-43
100	12	134-164	382-466	12-15	17-21	—	—	—	—
	16	131-160	357-436	9-11	18-22	—	—	—	—

LEGEND

DB — Dry Bulb
— — No Operation in This Temperature Range

OPERATION

Power Up Mode

The unit will not operate until all the inputs, terminals and safety controls are checked for normal operation.

NOTE: The compressor will have a 5-minute anti-short cycle upon power up.

Unit Protection Module (UPM)

Figure 40 shows the UPM sequence of operations for unit safeties. All 50PC units are equipped with a UPM.

Units with Better B, Complete C, or Deluxe D Controls

STANDBY

Y and W terminals are not active in Standby mode; however, the O and G terminals may be active, depending on the application. The compressor will be off.

COOLING

Y and O terminals are active in Cooling mode. After power up, the first call to the compressor will initiate a 270 to 300 second random start delay and a 5-minute anti-short cycle protection time delay. After both delays are complete, the compressor is energized.

NOTE: On all subsequent compressor calls the random start delay is omitted.

HEATING STAGE 1

Terminal Y is active in heating stage 1. After power up, the first call to the compressor will initiate a 270 to 300 second random start delay and a 5-minute anti-short cycle protection time delay. After both delays are complete, the compressor is energized.

NOTE: On all subsequent compressor calls the random start delay is omitted.

HOT GAS REHEAT (OPTIONAL FOR COMPLETE C OR DELUXE D CONTROLS)

Terminal H is active in dehumidification mode with hot gas reheat. After a call for H, the reversing valve (O), compressor (Y), and fan (G) are also enabled.

NOTE: Any call for cooling (Y), heating (Y or W), or reversing valve (O) will override dehumidification mode (H).

WATERSIDE ECONOMIZER (OPTIONAL FOR COMPLETE C OR DELUXE D CONTROLS)

Y and O terminals are active in Cooling mode. When the entering water temperature drops below the entering water temperature set point on the waterside economizer aquastat, the compressor and reversing valve are disabled and the waterside economizer is enabled. The waterside economizer three way control valve will divert water to the economizer coil for free cooling. When the entering water temperature rises above the aquastat set point, the waterside economizer is disabled and the compressor and reversing valve are enabled.

TWO WAY WATER FLOW CONTROL VALVE (OPTIONAL)

The two way water flow control valve is enabled anytime there is a call for cooling (Y), heating (Y), or dehumidification (H) and allows water to flow through the unit. When there is no call for cooling, heating, or dehumidification, the water flow control valve is disabled, stopping flow through the unit.

BOILERLESS HEAT (DELUXE D ONLY)

When the entering water temperature is below the boilerless heat aquastat entering water temperature set point and there is a call for heating (Y), the compressor is disabled and the auxiliary heat output is enabled. When the entering water temperature is above the aquastat set point, the auxiliary heat output is disabled and the compressor is enabled.

PUMP/VALVE RELAY (DELUXE D ONLY)

The pump/valve relay is enabled anytime there is a call for cooling (Y), heating (Y), or dehumidification (H) and can be used to enable/disable field installed flow control valves or circulator pumps. When there is no call for cooling, heating, or dehumidification, pump/valve relay is disabled.

Units with WSHP Open Controls

Units with WSHP Open still feature a UPM board for unit operation, so the operation will be similar to the sequence for the other control packages. WSHP Open does feature advanced functionality, such as automatic fan speed control and intelligent alarming, which will differ from the other control packages. Below is an overview of the different features for the WSHP Open controls. For more details of the WHSP Open operation, please refer to the WSHP Open Integration Guide and the WSHP Points/Properties Manual. See Fig. 41 for WSHP Open Control Board overview.

COOLING

The control will operate one or two stages of compression to maintain the desired cooling setpoint. To improve dehumidification and reduce noise, the control operates the fan at the lowest speed possible to satisfy the load conditions. If cooling is active and should the SAT approach the minimum SAT limit, the fan will be indexed to the next higher speed. Should this be insufficient and if the SAT falls further (equal to the minimum SAT limit), the fan will be indexed to the maximum speed. If the SAT still continues to falls 5 degrees below the minimum SAT limit, all cooling stages will be disabled.

During Cooling, the reversing valve output will be held in the cooling position (either B or O type as configured) even after the compressor is stopped. The valve will not switch position until the opposite mode is required.

REVERSE CYCLE HEATING

The control will operate one or two stages of compression to maintain the desired heating setpoint. To reduce noise, the control operates the fan at the lowest speed possible. If the heating is active and should the SAT approach the maximum SAT limit, the fan will be indexed to the next higher speed. Should this be insufficient, then if the SAT rises further and reaches the Maximum Heating SAT limit, the fan will be indexed to the maximum speed. If the SAT still continues to rise 5°F above the maximum limit, all heating stages will be disabled.

During Heating, the reversing valve output will be held in the heating position (either B or O type as configured) even after the compressor is stopped. The valve will not switch position until the opposite mode is required.

TWO POSITION OA DAMPER

The control can be configured to operate a 2-position ventilation damper to provide the minimum ventilation requirements during occupied periods.

MODULATING OA DAMPER WITH DCV

The control can be configured to operate a modulating ventilation damper during occupied periods that responds to changing CO_2 levels from an optional sensor. The control monitors the CO_2 level and compares it to the configured setpoints and adjusts the ventilation rate as required. The control provides proportional ventilation to meet the requirements of ASHRAE specifications by providing a base ventilation rate and then increasing the rate as the CO_2 level increases. The control has three user adjustable setpoints; start ventilation maximum ventilation and maximum damper position. The control will begin to proportionally increase ventilation when the CO_2 level rises above the start ventilation setpoint and will reach the full ventilation rate (maximum damper position) when the CO_2 level is at or above the maximum setpoint. A user configurable minimum damper position ensures that proper base ventilation is delivered when occupants are not present.

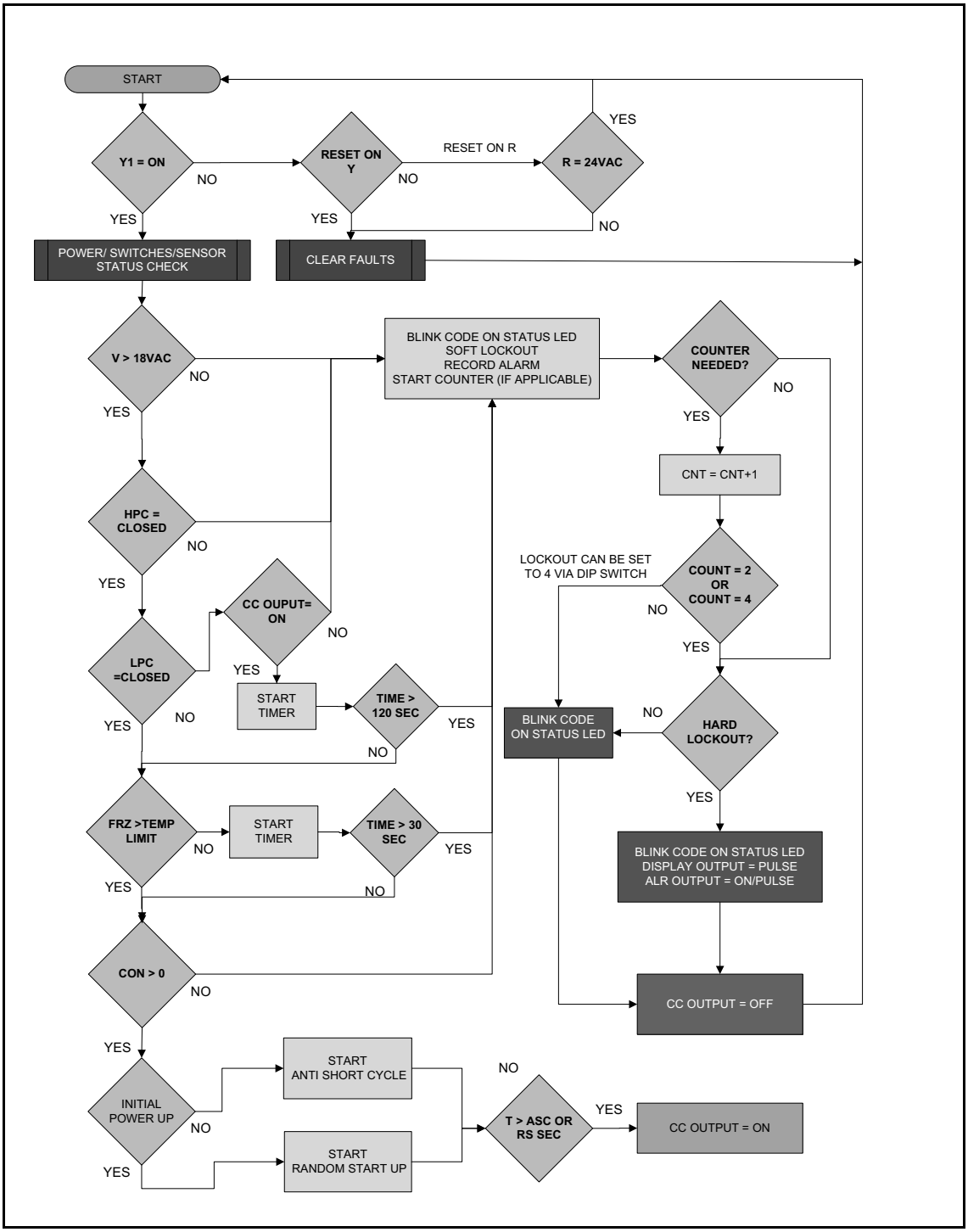

Fig. 40 — UPM Sequence of Operations

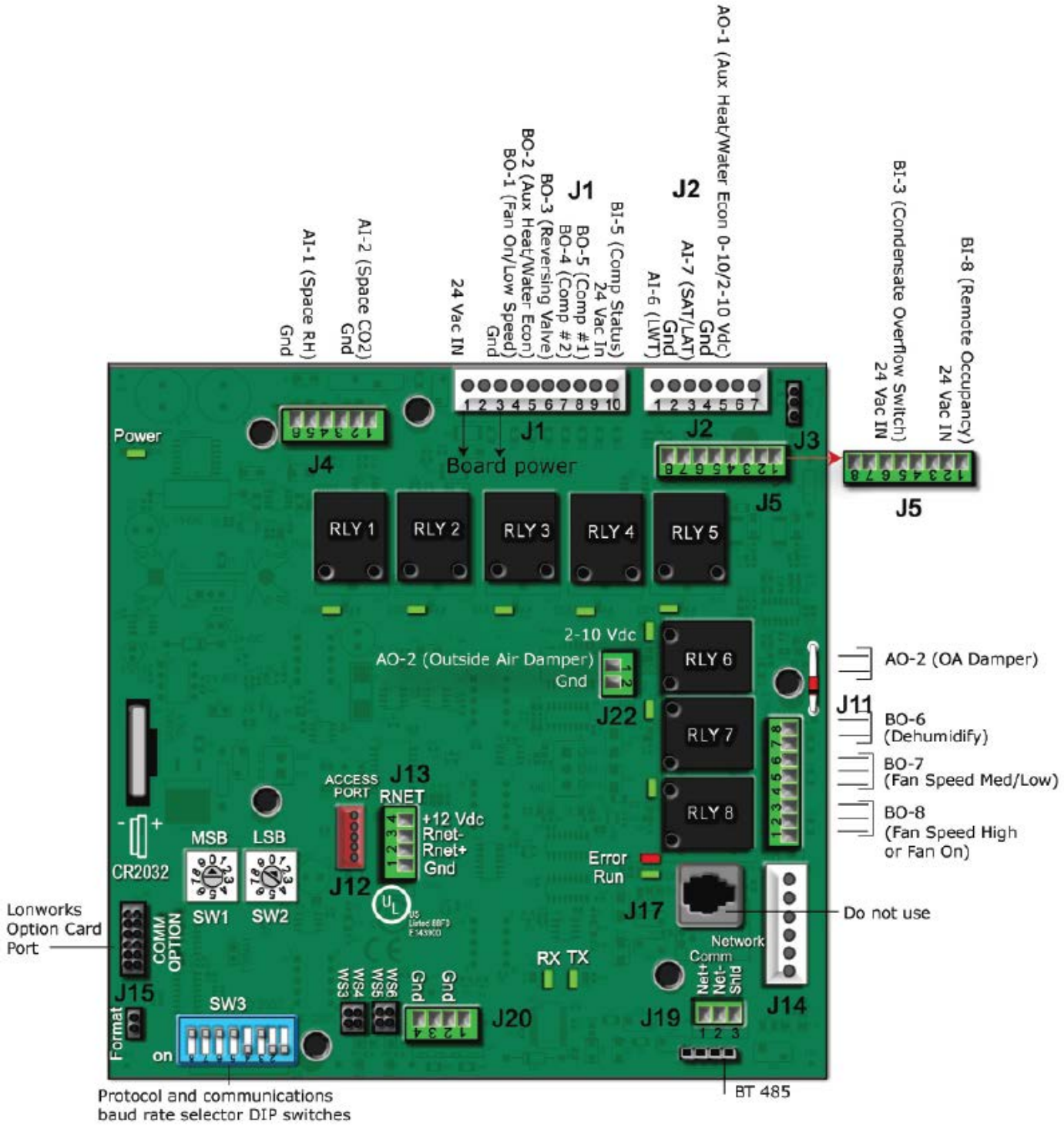

Fig. 41 — WSHP Open Control Board

AUXILIARY MODULATING HOT WATER / STEAM HEATING REHEAT

The control can modulate a hot water or steam valve connected to a coil on the discharge side of the unit and supplied by a boiler in order to maintain the desired heating setpoint should the compressor capacity be insufficient or a compressor failure occurs. Unless the compressor fails, the valve will only operate to supplement the heat provided by the compressor if the space temperature falls two degrees or more below the desired heating setpoint. The valve will be controlled so the SAT will not exceed the Maximum Heating SAT limit.

2-POSITION HOT WATER / STEAM HEATING REHEAT

The control can operate a two position, NO or NC, hot water or steam valve connected to a coil on the discharge side of the unit and supplied by a boiler in order to maintain the desired heating setpoint should the compressor capacity be insufficient or a compressor failure occurs. Unless the compressor fails, the valve will only open to supplement the heat provided by the compressor if the space temperature falls two degrees or more below the desired heating setpoint. The valve will be controlled so the SAT will not exceed the Maximum Heating SAT limit and subject to a two minute minimum OFF time to prevent excessive valve cycling.

SINGLE STAGE ELECTRIC AUXILIARY HEAT

The control can operate a single stage of electric heat connected to a coil on the discharge side of the unit in order to maintain the desired heating setpoint should the compressor capacity be insufficient or a compressor failure occurs. Unless the compressor fails, the heat stage will only operate to supplement the heat provided by the compressor if the space temperature falls two degrees or more below the desired heating setpoint. The heat stage will be controlled so the SAT will not exceed the Maximum Heating SAT limit and subject to a two minute minimum OFF time to prevent excessive cycling.

AUTOMATIC FAN SPEED CONTROL

The control is capable of controlling up to three fan speeds. The motor will operate at the lowest speed possible to provide quiet and efficient fan operation. The motor will increase speed if additional cooling or heating is required to maintain the desired space temperature setpoint. The control increases the motor's speed by one step for each 2°F above the cooling or below the heating setpoint. Also, the control will increase the fan speed as the Supply Air Temperature approaches the configured minimum or maximum limits. Fan speed for PSC motors is controlled by energizing and de-energizing low, medium and high speed relays. Fan speed for ECMs is controlled by first energizing the low speed tap. If a higher speed is required, the low speed tap remains energized while the medium speed tap is also energized. If high motor speed is required, all three speed taps are energized. If more than one speed tap is energized for an ECM, the ECM will default to the higher speed.

FAN SPEED CONTROL - DURING HEATING

Whenever heat is required and active, the control continuously monitors the supply air temperature to verify it does not rise above the configured Maximum Heating SAT Limit (110°F Default). As the SAT approaches this value, the control will increase the fan speed as required to ensure the SAT will remain within the limit. This feature provides the most quiet and efficient operation by operating the fan at the lowest speed possible.

FAN SPEED CONTROL - DURING COOLING

Whenever mechanical cooling is required and active, the control continuously monitors the supply air temperature to verify it does not fall below the configured Minimum Cooling SAT Limit (50°F Default). As the SAT approaches this value, the control will increase the fan speed as required to insure the SAT will remain within the limit.

MODULATING WATER ECONOMIZER CONTROL

The control has the capability to modulate a water valve to control condenser water flowing through a coil on the entering air side of the unit.

COOLING

The purpose is to provide an economizer cooling function by using the water loop when the entering water loop temperature is suitable (at least 5°F below space temperature). If the water loop conditions are suitable, then the valve will modulate open as required to maintain a Supply Air Temperature that meets the load conditions. Should the economizer coil capacity be insufficient for a period greater than 5 minutes, or should a high humidity condition occur, then the compressor will be started to satisfy the load. As the SAT approaches the Minimum Cooling SAT limit, the economizer valve will modulate closed during compressor operation.

HEATING

Additionally, the control will modulate the water valve should the entering water loop temperature be suitable for heating (at least 5°F above space temperature) and heat is required. The valve will be controlled in a similar manner except to satisfy the heating requirement. Should the coil capacity be insufficient to satisfy the space load conditions for more than 5 minutes, then the compressor will be started to satisfy the load. As the SAT approaches the Maximum Heating SAT limit, the economizer valve will modulate closed during compressor operation.

2-POSITION WATER ECONOMIZER CONTROL

The control has the capability to open a NO or NC, two position, water valve to control condenser water flow through a coil on the entering air side of the unit.

COOLING

The purpose is to provide a cooling economizer function directly from the condenser water loop when the entering water loop temperature is suitable (at least 5°F below space temperature). If the optional coil is provided and the water loop conditions are suitable, then the valve will open to provide cooling to the space when required. Should the capacity be insufficient for a period greater than 5 minutes, or should a high humidity condition occur, then the compressor will be started to satisfy the load. Should the SAT reach the Minimum Cooling SAT limit, the economizer valve will close during compressor operation.

HEATING

Additionally, the economizer control will open the water valve should the entering water loop temperature be suitable for heating (at least 5°F above space temperature) and heat is required. The valve will be controlled in a similar manner except to satisfy the heating requirement. Should the coil capacity be insufficient to satisfy the space load for more than 5 minutes, then the compressor will be started to satisfy the load. Should the SAT reach the Maximum Heating SAT limit, the economizer valve will close during compressor operation.

POWER FAIL RESTART DELAY

The control provides a delay when recovering from a power failure in order to ensure stable utility power and to prevent excessive demand when many units start simultaneously. Each unit can be user configured for a unique delay between 0 and 600 seconds. The factory programmed default delay is 60 seconds. (Note that the onboard control will not start the compressor on any call for heating, cooling or dehumidification until 5 minutes has elapsed from the power restoration. If a lower restart time delay is configured, only the fan start will be affected as the internal logic boards will prevent compressor operation for more than 300 seconds).

SUPPLY AIR TEMPERATURE MONITORING / CONTROL / ALARM

The control has 2 configurable control limits for supply air temperature. The control will monitor the supply air temperature (SAT) and verify it is within limits. During cooling, the control will increase fan speed and reduce compressor stages should the SAT approach the Maximum Cooling SAT limit. Likewise, during heating, should the SAT approach the Maximum Heating SAT limit, the fan speed will be increased, followed by reducing compressor stages. Auxiliary heating coils are controlled so as not to exceed the Maximum Heating SAT limit. Additionally, a separate High SAT Alarm Limit and Low SAT Alarm Limit are provided so that an alarm can be generated to indicate an abnormal SAT condition should the SAT exceeds the alarm limit for more than 1 minute.

DEHUMIDIFICATION

The control can monitor the space relative humidity and if the unit is equipped with the factory installed hot gas reheat, whenever the humidity exceeds the appropriate (occupied or unoccupied) humidity setpoint and if the unit is not heating or cooling, the control will activate cooling (compressor and reversing valve) and the hot gas reheat outputs to start dehumidification. The fan will operate at medium speed if equipped with a three speed fan.

SPACE TEMPERATURE ALARMS

The control provides the ability to generate an alarm whenever the space temperature exceeds the alarm setpoint. A separate occupied hysteresis and unoccupied high and low alarm setpoints

are provided. The control provides a 5 minute alarm delay during unoccupied periods. During occupied periods, the control uses the occupied temperature setpoint and applies the hysteresis value to determine the alarm setpoints. Whenever an occupancy transition from unoccupied to occupied occurs or the occupied temperature setpoints are changed causing an alarm condition to occur, the control will automatically calculate an alarm delay (equivalent to the configured delay time in minutes / deg F times the temperature error that occurred). This will prevent nuisance alarms whenever an occupancy change occurs and allows time for the unit to correct an alarming temperature condition.

CONDENSER WATER TEMPERATURE MONITORING / CONTROL / ALARM

The control has 4 configurable alarm limits for condenser water temperature. The control will verify that the water temperature is within operating range (between high and low limits) for the specific operating mode (heating or cooling) before energizing the compressor. Once the compressor is started, the condenser water temperature is further monitored to verify that it is within limits to insure sufficient water is flowing through the coil. Should the leaving water temperature rise above or fall below the appropriate limits, and alarm is generated and the compressors will be shut down if the condition occurs for more than 15 seconds.

HIGH CONDENSATE / OVERFLOW ALARM

The control will monitor a discrete input to determine the state of a condensate level switch. The input can be configured to alarm on either an open or closed switch condition. Should this input be in an alarm state, the control will start a timer and after the timer exceeds a configurable 'Condensate Overflow Alarm Delay' limit (10 seconds default), the control will generate an alarm and the unit will disable the compressor, dehumidification and fan outputs.

FILTER STATUS ALARM

The control provides the ability to generate a dirty filter alarm after the number of fan run hours exceeds a configurable filter alarm timer limit. The control monitors the fan output and if the fan is operating at any speed, it accumulates run time. Should the fan run time hours exceed the configurable limit, an alarm is generated. To reset the alarm timer after the alarm has been generated, a 'Reset Filter Alarm' input is provided. The filter alarm can be disabled by setting the 'Filter Alarm Timer Delay' to zero (factory default).

COMPRESSOR FAULT/LOCKOUT ALARM

The control will monitor a discrete input to determine the compressor state. Should the input state not match the desired compressor operating state for greater than 6 minutes, the control assumes the compressor has been locked-out and will generate an alarm. Also, when this fault occurs and if the unit is equipped with an auxiliary heating coil or a water economizer and the water temperature is suitable for heating, should heating be required, the control will utilize the auxiliary heating source as the primary heating source until the fault condition is corrected.

INSUFFICIENT VENTILATION ALARM

The control provides the ability to generate a high CO_2 level alarm during occupied periods whenever the CO_2 sensor value exceeds the user adjustable limit. Whenever an occupancy transition from unoccupied to occupied occurs, or the occupied alarm limit is changed to a value that causes an alarm condition to occur, the control will automatically calculate an alarm delay based on the error from setpoint (15 minutes minimum). This prevents nuisance alarms from occurring when occupancy changes. The IAQ alarm can be disabled by setting 'Occupied High IAQ Alarm Limit' to zero.

RELATIVE HUMIDITY ALARM

The control provides the ability to generate an alarm whenever the space relative humidity exceeds the alarm setpoint. A separate occupied and unoccupied alarm setpoint is provided. The control provides a 5 minute alarm delay during unoccupied periods. During occupied periods, the controller uses the occupied high RH alarm limit Whenever an occupancy transition from unoccupied to occupied occurs or the occupied high alarm limit is lowered causing an alarm condition to occur, the control will automatically calculate an alarm delay (equivalent to the configured delay time in minutes / % RH times the humidity error condition that occurred). This will prevent nuisance alarms whenever an occupancy change occurs and allows time for the unit to correct an alarming humidity condition.

TIME SCHEDULES

The control has an onboard time clock and configurable time schedules to provide occupancy scheduling.

HOLIDAY SCHEDULES

The control has holiday schedules that can be programmed to override the normal occupancy operation and cause the unit to go unoccupied for the duration of the schedule. Each schedule consists of a start date and time and an end date and time so each schedule can span more than a single day duration.

OVERRIDE SCHEDULES

The control has override schedules that can be programmed to override the normal occupancy and holiday operation and cause the unit to go occupied for the duration of the schedule. Each schedule consists of a start date and time and an end date and time so each schedule can span more than a single day duration.

SERVICE

Perform the procedures outlined below periodically, as indicated.

An annual “checkup” is recommended by a licensed refrigeration mechanic. Recording the performance measurements of volts, amps, and water temperature differences (both heating and cooling) is recommended. This data should be compared to the information on the unit’s data plate and the data taken at the original start-up of the equipment.

Periodic lockouts almost always are caused by air or water flow problems. The lockout (shutdown) of the unit is a normal protective measure in the design of the equipment. If continual lockouts occur call a mechanic immediately and have them check for: water flow problems, water temperature problems, airflow problems or air temperature problems. Use of the pressure and temperature charts for the unit may be required to properly determine the cause.

IMPORTANT: When a compressor is removed from this unit, system refrigerant circuit oil will remain in the compressor. To avoid leakage of compressor oil, the refrigerant lines of the compressor must be sealed after it is removed.

⚠ WARNING

To avoid injury and the discharge of refrigerant into the environment, all refrigerant discharged from this unit must be recovered without exception. Technicians must follow industry accepted guidelines and all local, state and federal statutes for the recovery and disposal of refrigerants.

⚠ WARNING

To avoid injury and the release of refrigerant into the atmosphere, the refrigerant circuit of this unit must only be serviced by technicians who meet local, state and federal proficiency requirements.

⚠ WARNING

To prevent injury or death due to electrical shock or contact with moving parts, open unit disconnect switch before servicing unit.

Filters

Filter changes or cleanings are required at regular intervals. The time period between filter changes will depend upon type of environment the equipment is used in. In a single family home, that is not under construction, changing or cleaning the filter every 60 days may be sufficient. In other applications such as motels, where daily vacuuming produces a large amount of lint, filter changes may be need to be as frequent as biweekly. See Fig. 1 and 2 for replacement filter sizes. Note that horizontal units containing two filters are taped together at the factory to facilitate removal. This should be done by end user as new filters are installed.

IMPORTANT: Units should never be operated without a filter.

⚠ CAUTION

Equipment should never be used during construction or renovation due to possibility of contaminants entering the air coil of the equipment which permanently affects the performance and may shorten the life of the equipment.

Condensate Drain Pans

The condensate drain should be checked quarterly by cleaning and flushing to ensure proper drainage.

Refrigerant System

Verify air and water flow rates are at proper levels before servicing. To maintain sealed circuitry integrity, do not install service gages unless unit operation appears abnormal. Check to see that unit is within the superheat and subcooling temperature ranges shown in Tables 19-31. If the unit is not within these ranges, recover and reweigh in refrigerant charge.

Compressor

Conduct annual amperage checks to ensure that amp draw is no more than 10% greater than indicated on the serial plate data.

Fan Motors

All units have lubricated fan motors. Fan motors should never be lubricated unless obvious, dry operation is suspected. Periodic maintenance oiling is NOT recommended as it will result in dirt accumulating in the excess oil and cause eventual motor failure. Conduct annual dry operation check and amperage check to ensure amp draw is no more than 10% greater than indicated on serial plate data and to remove any build up on the blower assembly.

Condensate Drain Cleaning

Clean the drain line and unit drain pan at the start of each cooling season. Check flow by pouring water into drain. Be sure trap is filled to maintain an air seal.

Air Coil Cleaning

Remove dirt and debris from evaporator coil as required by condition of the coil. A 10% solution of dishwasher detergent and water is recommended for cleaning both sides of the coil, followed by a thorough water rinse. Clean coil with a stiff brush, vacuum cleaner, or compressed air. Use a fin comb of the correct tooth spacing when straightening mashed or bent coil fins.

Condenser Cleaning

Water-cooled condensers may require cleaning of scale (water deposits) due to improperly maintained closed-loop water systems. Sludge build-up may need to be cleaned in an open water tower system due to induced contaminants.

Local water conditions may cause excessive fouling or pitting of tubes. Condenser tubes should therefore be cleaned at least once a year, or more often if the water is contaminated.

Proper water treatment can minimize tube fouling and pitting. If such conditions are anticipated, water treatment analysis is recommended. Refer to the Carrier System Design Manual, Part 5, for general water conditioning information.

⚠ CAUTION

Follow all safety codes. Wear safety glasses and rubber gloves when using inhibited hydrochloric acid solution. Observe and follow acid manufacturer's instructions.

Clean condensers with an inhibited hydrochloric acid solution. The acid can stain hands and clothing, damage concrete, and, without inhibitor, damage steel. Cover surroundings to guard against splashing. Vapors from vent pipe are not harmful, but take care to prevent liquid from being carried over by the gases.

Warm solution acts faster, but cold solution is just as effective if applied for a longer period.

GRAVITY FLOW METHOD

Do not add solution faster than vent can exhaust the generated gases.

When condenser is full, allow solution to remain overnight, then drain condenser and flush with clean water. Follow acid manufacturer's instructions. (See Fig. 42.)

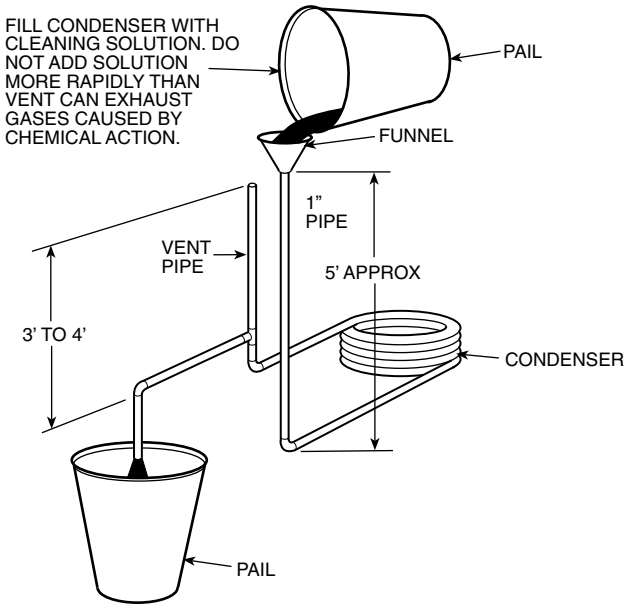

Fig. 42 — Gravity Flow Method

FORCED CIRCULATION METHOD

Fully open vent pipe when filling condenser. The vent may be closed when condenser is full and pump is operating. (See Fig. 43.)

Regulate flow to condenser with a supply line valve. If pump is a non-overloading type, the valve may be fully closed while pump is running.

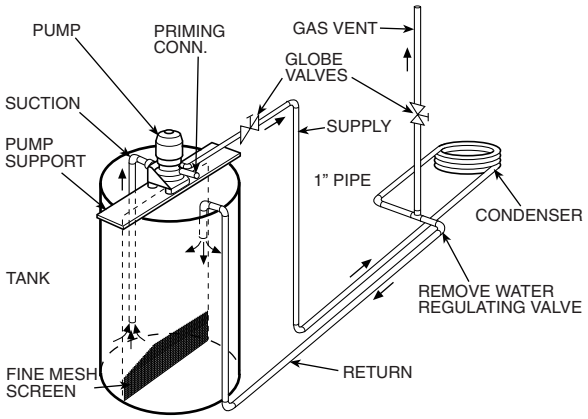

Fig. 43 — Forced Circulation Method

For average scale deposit, allow solution to remain in condenser overnight. For heavy scale deposit, allow 24 hours. Drain condenser and flush with clean water. Follow acid manufacturer's instructions.

Checking System Charge

Units are shipped with full operating charge. If recharging is necessary:

1. Insert thermometer bulb in insulating rubber sleeve on liquid line near filter drier. Use a digital thermometer for all temperature measurements. DO NOT use a mercury or dial-type thermometer.
2. Connect pressure gage to discharge line near compressor.
3. After unit conditions have stabilized, read head pressure on discharge line gage.

NOTE: Operate unit a minimum of 15 minutes before checking charge.

4. From standard field-supplied Pressure-Temperature chart for R-410A, find equivalent saturated condensing temperature.
5. Read liquid line temperature on thermometer; then subtract from saturated condensing temperature. The difference equals subcooling temperature.
6. Compare the subcooling temperature with the normal temperature listed in Tables 19-31. If the measured liquid line temperature does not agree with the required liquid line temperature, ADD refrigerant to raise the temperature or REMOVE refrigerant (using standard practices) to lower the temperature (allow a tolerance of ± 3°F).

Refrigerant Charging

⚠ WARNING

To prevent personal injury, wear safety glasses and gloves when handling refrigerant. Do not overcharge system — this can cause compressor flooding.

NOTE: Do not vent or depressurize unit refrigerant to atmosphere. Remove and recover refrigerant following accepted practices.

Air Coil Fan Motor Removal

⚠ CAUTION

Before attempting to remove fan motors or motor mounts, place a piece of plywood over evaporator coils to prevent coil damage.

Disconnect motor power wires from motor terminals before motor is removed from unit.

1. Shut off unit main power supply and apply lock-out/tag-out.
2. Loosen bolts on mounting bracket so that fan belt can be removed.
3. Loosen and remove the 2 motor mounting bracket bolts on left side of bracket.
4. Slide motor/bracket assembly to extreme right and lift out through space between fan scroll and side frame. Rest motor on a high platform such as a step ladder. Do not allow motor to hang by its power wires.

TROUBLESHOOTING

When troubleshooting problems with a WSHP, consider the following.

UNIT PROTECTION MODULE (UPM)

Each unit is factory provided with a UPM board that controls the compressor operation and monitors the safeties. The UPM board should be one of the first areas to start with troubleshooting an equipment issue. See Fig. 44.

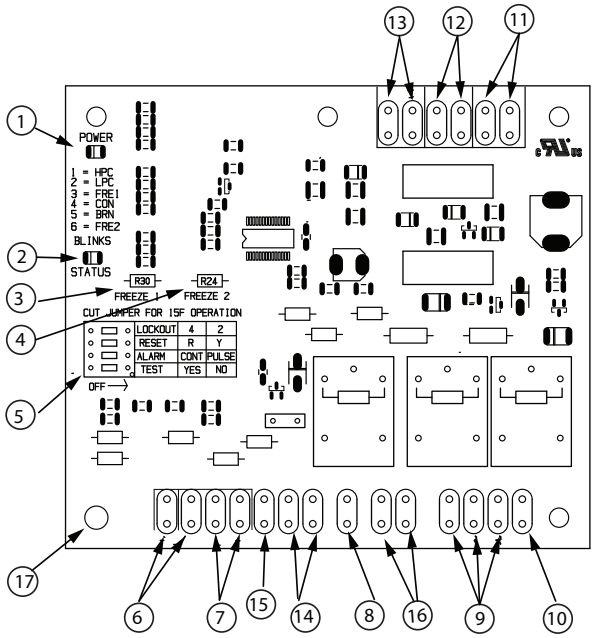

1	Board Power Indicator
2	UPM Status LED Indicator
3	Water Coil Freeze Protection Temperature Selection [R30]
4	Air Coil Freeze Protection Temperature Selection
5	UPM Settings
6	Water Coil Freeze Connection
7	Air Coil Freeze Connection
8	LED Status-Diagnostic Connection
9	24VAC Power Input
10	Compressor Contact Output
11	High Pressure Switch Connection
12	Call for Compressor Y1
13	Low Pressure Switch Connection
14	24VAC Power Common
15	Condensate Overflow Sensor
16	Dry Contact
17	UPM Ground Standoff

Fig. 44 — Unit Protection Module (UPM)

Safety controls include the following:

- High-pressure switch located in the refrigerant discharge line and wired across the HPC terminals on the UPM.
- Low-pressure switch located in the unit refrigerant suction line and wired across terminals LPC1 and LPC2 on the UPM board.
- UPM board dry contacts are normally open (NO).
- Water-side freeze protection sensor, mounted close to condensing water coil, monitors refrigerant temperature between condensing water coil and thermal expansion valve. If temperature drops below or remains at freeze limit trip for 30 seconds, the controller will shut down the compressor and enter a soft lockout condition. The default freeze limit trip is 30°F, however this can be changed to 15°F by cutting the R30 or Freeze1 resistor located on top of DIP switch SW1. Refer to Fig. 44, Item 3 for resistor location. If unit is employing a fresh water system (no anti-freeze protection), it is extremely important to have the Freeze1 R30 resistor set to 30°F in order to shut down the unit at the appropriate leaving water temperature and protect heat pump from freezing if a freeze sensor is included.
- Evaporator freeze protection sensor, mounted between the thermal expansion device and the evaporator, monitors refrigerant temperature between the evaporator coil and thermal expansion valve. If temperature drops below or remains at freeze limit trip for 30 seconds, the controller will shut down the compressor and enter into a soft lockout condition. The default freeze limit trip is 30°F. (See Fig. 45 and 46.)
- The condensate overflow protection sensor is located in the drain pan of the unit and connected to the 'COND' terminal on the UPM board.

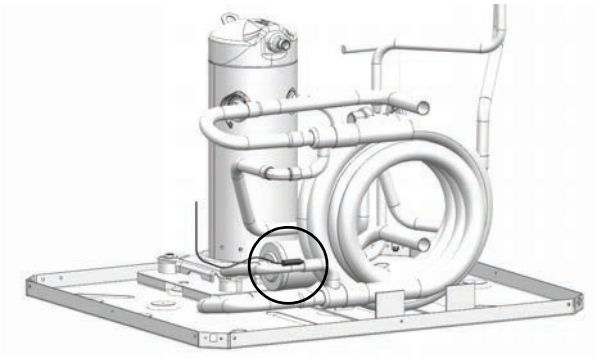

Fig. 45 — Water-Side Freeze Protection Sensor

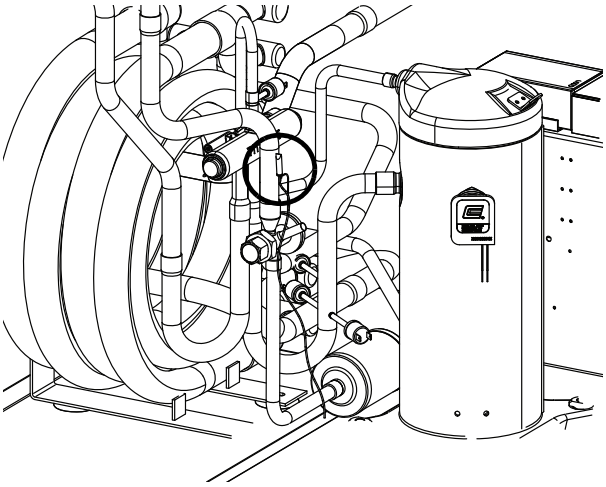

Fig. 46 — Air Coil Freeze Protection Sensor

The UPM board includes the following features:

Anti-short Cycle Timer

A 5-minute delay on break timer prevents compressor short cycling.

Random Start

Each controller has an unique random start delay ranging from 270 to 300 seconds on initial power up to reduce the chance of multiple units simultaneously starting at the same time after power up or after a power interruption, thus avoiding creating large inrush current.

Low Pressure Bypass Timer

If the compressor is running and the low-pressure switch opens, the controller will keep the compressor ON for 120 seconds. After 2 minutes if the low-pressure switch remains open, the controllers will shut down the compressor and enter a soft lockout. The compressor will not be energized until the low-pressure switch closes and the anti-short cycle time delay expires. If the low-pressure switch opens 2 to 4 times in 1 hour, the unit will enter a hard lockout. In order to exit hard lockout power to the unit would need to be reset.

Brownout/Surge/Power Interruption Protection

The brownout protection in the UPM board will shut does the compressor if the incoming power falls below 18 VAC. The compressor will remain OFF until the voltage is above 18 VAC and ANTI-SHORT CYCLE TIMER (300 seconds) times out. The unit will not go into a hard lockout.

Malfunction Output

Alarm output is normally open (NO) dry contact. If pulse is selected the alarm output will be pulsed. The fault output will depend on the DIP switch setting for ALARM. If it is set to CONST, a constant signal will be produced to indicate a fault has occurred and the unit requires inspection to determine the type of fault. If it is set to PULSE, a pulse signal is produced and a fault code is detected by a remote device indicating the fault. The remote device must have a malfunction detection capability when the UPM board is set to PULSE.

LED Fault Indicator

The UPM includes an alarm indicator with blink codes to indicate a UPM fault. (See Table 32.)

Table 32 — UPM Board Fault Blink Codes

LED BLINKS	FAULT	FAULT CRITERIA
0	None	All fault conditions nominal
1	High Pressure	Refrigerant discharge pressure has exceeded 600 psig
2	Low Pressure	Refrigerant suction pressure has fallen below 40 psig
3	Water Coil Freeze Condition	Refrigerant temperature to the water coil has fallen below 30°F for 30 seconds
4	Condensate Overflow	Condensate levels in the unit drain pan are too high
5	Brown Out	Control voltage has fallen below 18 VAC
6	Air Coil Freeze Condition	Refrigerant temperature to the air coil has fallen below 30°F for 30 seconds

Freeze Protection Sensors 1 and 2 (FP1 and FP2)

FP1 is located on the refrigerant liquid line between the TXV and the coaxial heat exchanger. If the temperature of the refrigerant entering the coaxial coil (heating mode) drops below or remains at 26°F (-6.6°C) for 30 seconds the UPM controller will shut down the compressor and enter into a soft lockout condition. Both the status LED and the Alarm contact will be active. The LED will flash three (3) times for this alarm condition. If this alarm occurs 2 times (or 4 times if the Lockout DIP switch is set to 4) within an hour the controller will enter into a hard lockout condition. The FP1 freeze limit trip can be lowered to 15°F (-9.4°C) by cutting the R30 sensor located near the top of DIP switch SW1. However, careful consideration should be given before cutting resistor R30. For example, if the unit is employing a fresh water system resistor R30 should remain to protect the coaxial heat exchanger from freezing and damaging the unit.

FP2 is located on the refrigerant liquid line between the TXV and the indoor coil. If the temperature of the refrigerant entering the indoor coil (cooling mode) drops below or remains at 26°F (-6.6°C) for 30 seconds the UPM controller will shut down the compressor and enter into a soft lockout condition. Both the status LED and the Alarm contact will be active. The LED will flash six (6) times for this alarm condition. If this alarm occurs 2 times (or 4 times if the Lockout DIP switch is set to 4) within an hour the controller will enter into a hard lockout condition. The FP2 freeze limit trip can be lowered to 15°F (-9.4°C) by cutting the R24 sensor located near the top of DIP switch SW1. However, careful consideration should be given before cutting resistor R24. For example, a low refrigerant temperature could cause frosting on the indoor coil, which restricts airflow causing the unit to malfunction.

Intelligent Reset

If a fault condition is initiated, the 5 minute delay on break time period is initiated and the unit will restart after these delays expire. During this period the fault LED will indicate the cause of the fault. If the fault condition still exists or occurs 2 or 4 times (depending on 2 or 4 setting for LOCKOUT DIP switch) before 60 minutes, the unit will go into a hard lockout and requires a manual lockout reset. A single condensate overflow fault will cause the unit to go into a hard lockout immediately, and will require a manual lockout reset.

Lockout Reset

A hard lockout can be reset by turning the unit thermostat off and then back on when the RESET DIP switch is set to "Y" or by shutting off unit power at the circuit breaker when the RESET DIP switch is set to "R".

Selectable Alarm Mode

The UPM board can be configured to have either a constant or pulse signal. If constant (CONT) is selected the UPM will provide a closed contact at the alarm output until the alarm is cleared. If pulsed (PULSE) is selected the UPM will sequence the alarm contact with the fault LED flashes.

Test Mode (TEST)

In test mode the ASC and Random Start time delays are reduced (5 seconds and 10 seconds respectively), and serve no function to the end user equipment. The alarm and display relays also pulse for both soft and hard lockout conditions, and are both cleared through a manual reset.

UPM Sequence of Operations

Figure 40 shows the UPM sequence of operations.

Freeze Protection Sensors

The control system employs 2 nominal 10,000 ohm thermistors (FP1 and FP2) that are used for freeze protection. Be sure FP1 is located in the discharge fluid and FP2 is located in the air discharge. (See Fig. 47.)

Thermostatic Expansion Valves

Thermostatic expansion valves (TXV) are used as a means of metering the refrigerant through the evaporator to achieve a preset superheat at the TXV sensing bulb. Correct superheat of the refrigerant is important for the most efficient operation of the unit and for the life of the compressor.

Packaged heat pumps typically use one bi-flow TXV to meter refrigerant in both modes of operation. When diagnosing possible TXV problems it may be helpful to reverse the refrigerant flow to assist with the diagnosis.

Geothermal and water source heat pumps are designed to operate through a wide range of entering-water temperatures that will have a direct effect on the unit refrigerant operating pressures. Therefore, diagnosing TXV problems can be difficult.

TXV FAILURE

The most common failure mode of a TXV is when the valve fails while closed. Typically, a TXV uses spring pressure to close the valve and an opposing pressure, usually from a diaphragm, to open the valve. The amount of pressure exerted by the diaphragm will vary, depending on the pressure inside of the sensing bulb. As the temperature of and pressure within the bulb decreases, the valve will modulate closed and restrict the refrigerant flow through the valve. The result is less refrigerant in the evaporator and an increase in the superheat. As the temperature at the bulb increases the diaphragm pressure will increase, which opens the valve and allows more refrigerant flow and a reduction in the superheat.

If the sensing bulb, connecting capillary, or diaphragm assembly are damaged, pressure is lost and the spring will force the valve to a closed position. Often, the TXV will not close completely so some refrigerant flow will remain, even if there is inadequate flow for the heat pump to operate.

The TXV sensing bulb must be properly located, secured, and insulated as it will attempt to control the temperature of the line to which it is connected. The sensing bulb must be located on a dedicated suction line close to the compressor. On a packaged heat pump, the bulb may be located almost any place on the tube running from the compressor suction inlet to the reversing valve. If the bulb is located on a horizontal section, it should be placed in the 10:00 or 2:00 position for optimal performance.

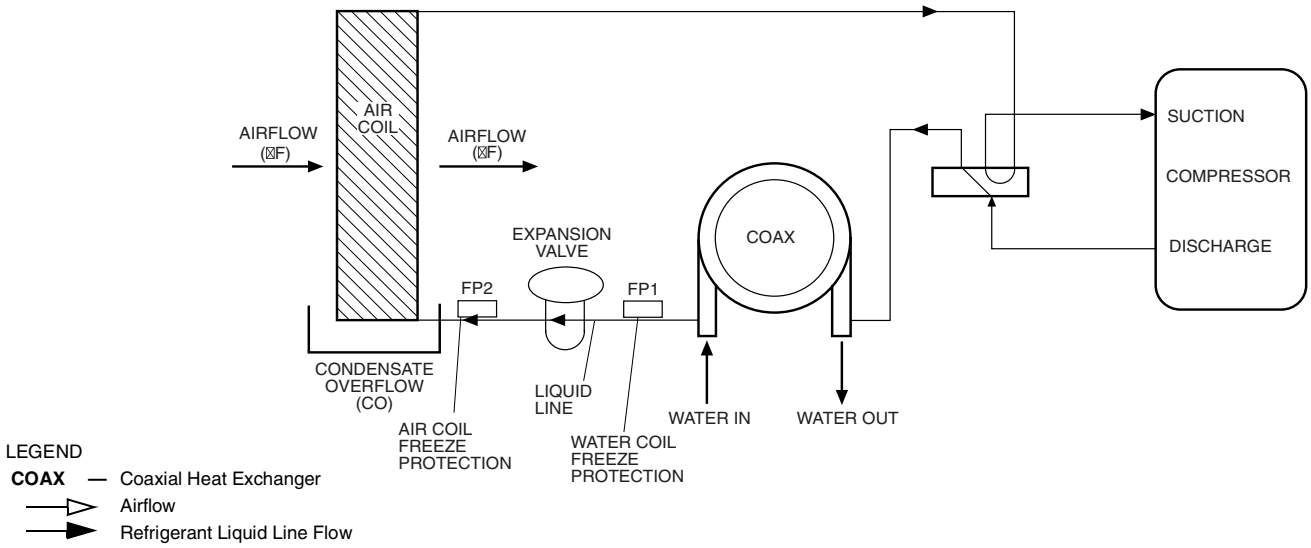

Fig. 47 — FP1 and FP2 Thermistor Location

⚠ CAUTION

Use caution when tightening the strap. The strap must be tight enough to hold the bulb securely but caution must be taken not to over-tighten the strap, which could dent, bend, collapse or otherwise damage the bulb.

The bulb must be secured to the pipe using a copper strap. The use of heat transfer paste between the bulb and the pipe will also help ensure optimum performance.

The bulb must also be properly insulated to eliminate any influence on valve operation by the surrounding conditions. Cork tape is the recommended insulation as it can be molded tight to the bulb to prevent air infiltration.

Causes of TXV Failure

The most common causes of TXV failure are:

1. A cracked, broken, or damaged sensing bulb or capillary can be caused by excessive vibration of the capillary during shipping or unit operation.
   If the sensing bulb is damaged or if the capillary is cracked or broken, the valve will be considered failed and must be replaced. Replacement of the TXV "power head" or sensing bulb, capillary, diaphragm assembly is possible on some TXVs. The power head assembly screws onto most valves, but not all are intended to be replaceable. If the assembly is not replaceable, replace the entire valve.
2. Particulate debris within the system can be caused by several sources including contaminated components, tubing, and service tools, or improper techniques used during brazing operations and component replacement.
   Problems associated with particulate debris can be compounded by refrigerant systems that use POE (polyol ester oil). POE oil has solvent-like properties that will clean the interior surfaces of tubing and components. Particulates can be released from interior surfaces and may migrate to the TXV strainer, which can lead to plugging of the strainer.
3. Corrosive debris within the system may happen after a failure, such as a compressor burn out, if system was not properly cleaned.
4. Noncondensables may be present in the system. Non-condensables includes any substance other than the refrigerant or oil such as air, nitrogen, or water. Contamination can be the result of improper service techniques, use of contaminated components, and/or improper evacuation of the system.

Symptoms

The symptoms of a failed TXV can be varied and will include one or more of the following:

- Low refrigerant suction pressure
- High refrigerant superheat
- High refrigerant subcooling
- TXV and/or low pressure tubing frosting
- Equalizer line condensing and at a lower temperature than the suction line or the equalizer line frosting
- FP1 faults in the heating mode in combination with any of the symptoms listed above
- FP2 faults in the cooling mode in combination with any of the symptoms listed above. Some symptoms can mimic a failed TXV but may actually be caused be another problem.

Before conducting an analysis for a failed TXV the following must be verified:

- Confirm that there is proper water flow and water temperature in the heating mode.
- Confirm that there is proper airflow and temperature in the cooling mode.
- Ensure coaxial water coil is clean on the inside; this applies to the heating mode and may require a scale check.
- Refrigerant may be undercharged. To verify, subcooling and superheat calculations may be required.

Diagnostics

Several tests may be required to determine if a TXV has failed. The following tools may be required for testing:

1. Refrigerant gage manifold compatible with the refrigerant in the system.
2. Digital thermometer, preferably insulated, with wire leads that can be connected directly to the tubing.
3. Refrigerant pressure-temperature chart for the refrigerant used.

To determine that a TXV has failed, verify the following:

- The suction pressure is low and the valve is non-responsive.
- The TXV sensing bulb can be removed from the suction line and warmed by holding the bulb in your hand. This action should result in an increase in the suction pressure while the compressor is operating. The sensing bulb can also be chilled by immersion in ice water, which should result in a decrease in the suction pressure while the compressor is operating. No change in the suction pressure would indicate a nonresponsive valve.
- Simultaneous LOW suction pressure, HIGH refrigerant subcooling and HIGH superheat.
- LOW suction pressure, LOW subcooling and HIGH superheat may indicate an undercharge of refrigerant. HIGH subcooling and LOW superheat may indicate an overcharge of refrigerant. The suction pressure will usually be normal or high if there is an overcharge of refrigerant.
- LOW suction pressure and frosting of the valve and/or equalizer line may indicate a failed valve. However, these symptoms may also indicate an undercharge of refrigerant. Calculate the subcooling and superheat to verify a failed valve or refrigerant charge issue.

Repair

⚠ WARNING

Puron® refrigerant (R-410A) operates at higher pressure than R-22, which is found in other WSHPs. Tools such as manifold gages must be rated to withstand the higher pressures. Failure to use approved tools may result in a failure of tools, which can lead to severe damage to the unit, injury or death.

⚠ WARNING

Most TXVs are designed for a fixed superheat setting and are therefore considered non-adjustable. Removal of the bottom cap will not provide access for adjustment and can lead to damage to the valve or equipment, unintended venting of refrigerant, personal injury, or possibly death.

⚠ CAUTION

Always recover the refrigerant from the system with suitable approved tools, recovery equipment, and practices prior to attempting to remove or repair any TXV.

⚠ CAUTION

Use caution when tightening the strap. The strap must be tight enough to hold the bulb securely but caution must be taken not to over-tighten the strap, which could dent, bend, collapse or otherwise damage the bulb.

⚠ CAUTION

Puron® refrigerant (R-410A) requires the use of synthetic lubricant (POE oil). Do not use common tools on systems that contain R-22 refrigerants or mineral oil. Contamination and failure of this equipment may result.

IMPORTANT: Due to the hygroscopic nature of the POE oil in Puron refrigerant (R-410A) and other environmentally balanced refrigerants, any component replacement must be conducted in a timely manner using caution and proper service procedure for these types of refrigerants. A complete installation instruction will be included with each replacement TXV/filter drier assembly. It is of critical importance these instructions are thoroughly understood and carefully followed. Failure to follow these instructions can result in a system that is contaminated with moisture to the extent that several filter drier replacements may be required to properly dry the system.

IMPORTANT: Repair of any sealed refrigerant system requires training in the use of refrigeration tools and procedures. Repair should only be attempted by a qualified service technician. A universal refrigerant handling certificate will be required. Local and/or state license or certificate may also be required.

Figure 48 illustrates the typical refrigerant diagram for 50PC units. See Table 33 for additional troubleshooting information.

⚠ CAUTION

Disconnect power from unit before removing or replacing connectors, or servicing motor. Wait 5 minutes after disconnecting power before opening motor.

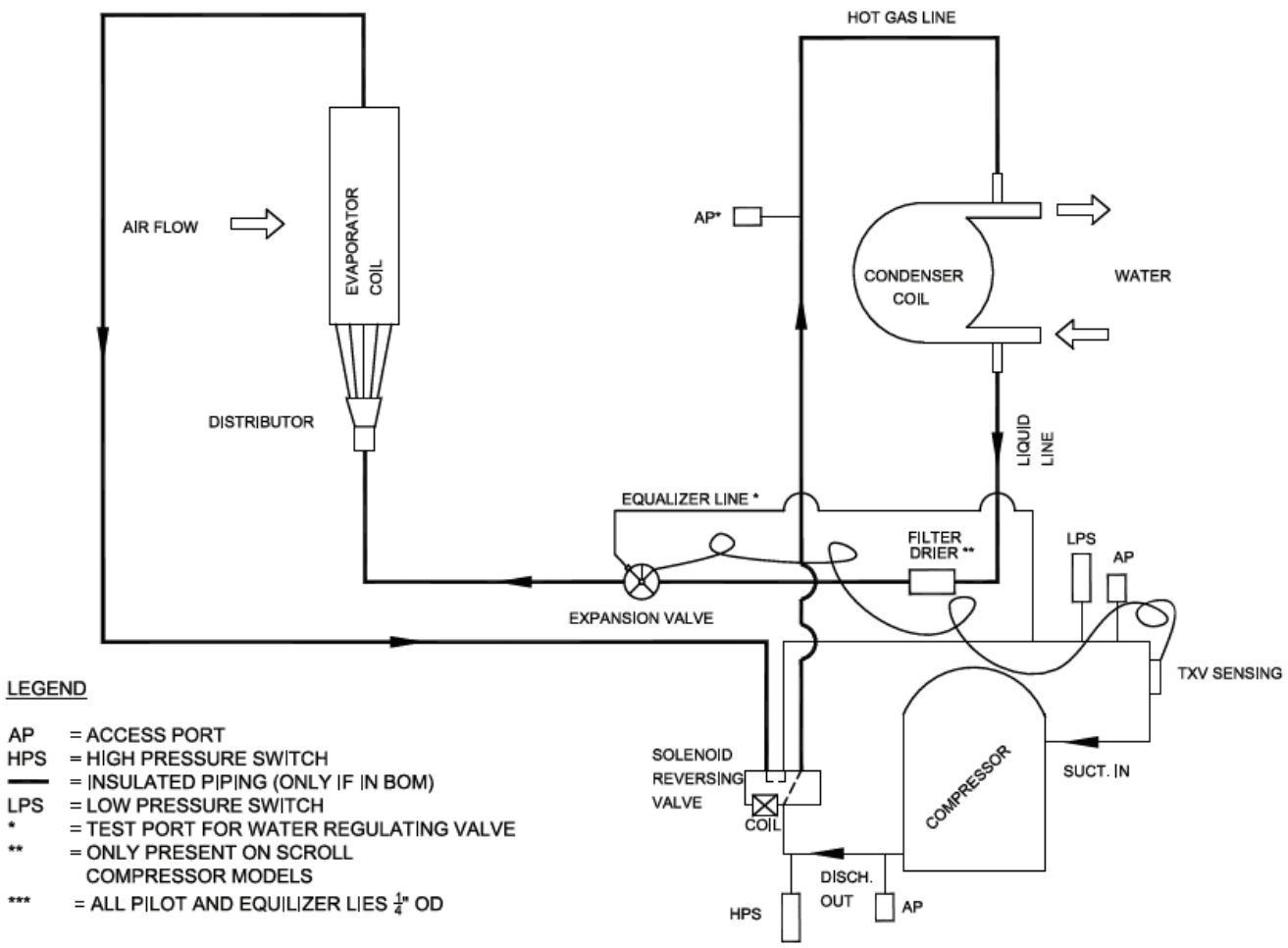

Fig. 48 — Typical Refrigerant Diagram - 50PC Units

Table 33 — Troubleshooting

FAULT	COOLING	HEATING	CHECK	POSSIBLE CAUSE	SOLUTION
No Compressor Operation but Fan Runs	X		Is fault LED Blinking 1 time?	High Pressure fault - no or low water flow	Check water valves and/or pumps for proper operation. Check for water coil blockage.
				High Pressure fault - high water temperature	Check water temperature - is it in range?
				High Pressure fault - fouled or scaled water coil	Check for proper flow rate and water temperature, but low water side temp rise in cooling.
		X		High Pressure fault - no or low airflow	Check fan motor for proper operation.
					Check air filter.
					Inspect air coil for dirt/debris.
					Check ductwork - are dampers closed or blocked?
	X		Is fault LED Blinking 2 times?	Low Pressure fault - no or low airflow	Check fan motor for proper operation.
					Check air filter.
					Inspect air coil for dirt/debris.
					Check ductwork - are dampers closed or blocked?
				Low Pressure fault - low refrigerant	Check refrigerant pressure with gage set.
		X		Low Pressure fault - no or low water flow	Check water valves and/or pumps for proper operation. Check for water coil blockage.
				Low Pressure fault - low refrigerant	Check for proper flow rate and water temperature, but low water side temp drop in heating.
		X	Is fault LED Blinking 3 times?	Freeze fault, water coil - no or low water flow	Check water valves and/or pumps for proper operation. Check for water coil blockage.
				Freeze fault - low water temperature	Check water temperature - is it below 40°F entering? If heat pump is connected to a closed loop with antifreeze check that the "FREEZE 1" resistor on the Complete C board has been cut to set the unit to antifreeze mode.
				Freeze fault - low refrigerant	Check refrigerant pressure with gage set.
	X		Is fault LED Blinking 4 times?	Condensate fault - poor drainage	Check condensate pan for high water level. Check drain line for blockages, double trapping or inadequate trapping.
				Condensate fault - blocked return air	Check condensate pan for high water level. Check air filter and return air ductwork for blockage. Check that there is adequate space between the return air opening and walls or other obstructions on free return applications.
	X	X	Is fault LED Blinking 5 times?	Brown out fault - low supply voltage	Check primary voltage - ensure it is within the limits listed on the unit data plate.
				Brown out fault - overloaded control circuit	Check control voltage - if it is below 18 V check accessories connected to the unit and ensure that they do not exceed the VA draw shown on page 37.
				Brown out fault - bad thermostat connection	Check that thermostat wiring is proper gage and length, that it is not damaged and that all connections at the thermostat and heat pump are secure.
	X		Is fault LED Blinking 6 times?	Freeze fault, air coil - no or low airflow	Check fan motor for proper operation.
					Check air filter.
					Inspect air coil for dirt/debris.
					Check ductwork - are dampers closed or blocked?
				Freeze fault, air coil - blocked return air	Check that there is adequate space between the return air opening and walls or other obstructions on free return applications.
				Freeze fault, air coil - low refrigerant	Check refrigerant pressure with gage set.
	X	X	No fault LED - contactor not energized	Thermostat not calling for compressor operation	Ensure that the thermostat is on and calling for "Y".
				Bad thermostat connection	Check "Y" connection from thermostat. Ensure that there is 24 VAC between "Y" and "C".
				Loose wire to contactor coil	Check wiring - ensure that there is 24 VAC across the contactor coil.
				Burned out contactor coil	Test contactor with 24VAC (between "R" and "C"). Ohm contactor coil - an open circuit indicates a burned coil.
	X	X	No fault LED - contactor energized	Open compressor overload	Check for supply voltage at the load side of the contactor. For 3 phase models check phase rotation and voltage at all 3 phases.
				Poor wiring connections	Look for signs of heat on the wiring insulation. Check that all wiring connections are secure and properly torqued.
				Burned out compressor	Does compressor hum when power is applied? If not check the resistance of the compressor windings using the values shown in the compressor characteristics chart. Note that the compressor must be cool (70°F) when checking the windings.

Table 33 — Troubleshooting (cont)

FAULT	COOLING	HEATING	CHECK	POSSIBLE CAUSE	SOLUTION
No compressor or fan operation	X	X	Power LED on	Bad thermostat connection / faulty thermostat	Check thermostat and wiring. Check unit terminal block for 24 VAC between "Y" and "C" and "G" and "C".
			Power LED off	Low or no supply power	Ensure that the supply voltage to the unit is with in the range shown on the unit data plate.
				Faulty control transformer	Check for 24 VAC between "R" and "C" on the unit terminal block. For 75 and 100 VA transformers, check that the transformer circuit breaker has not tripped. Check low voltage circuit for overload conditons or short circuits before replacing the transformer.
No fan operation (PSC motor)	X	X	Fan relay energized	Faulty motor	Check supply voltage from the fan relay to the motor. Check that all motor wires are secure. With power off spin the motor shaft - noise, resistance or uneven motion can be signs of motor failure.
			Fan relay not energized	No fan operation signal	Check for 24 VAC across the fan relay coil. Check all wiring connections.
				Bad fan relay	If the relay coil is energized but the relay does not pull in, check the resistance across the relay coil - an open circuit is an indicator of a faulty relay.
No fan operation (constant torque motor)	X	X		No fan operation signal	Check for 24 VAC between "G" and "C". Check all wiring connections.
				Loose wiring	Check all wiring connections at motor and control box.
				Faulty motor	Check supply voltage to the motor. Check that all motor wires are secure. With power off spin the motor shaft - noise, resistance or uneven motion can be signs of motor failure.
No fan operation (constant airflow motor)	X	X		No fan operation signal	Check for 24 VAC between "G" and "C". Check all wiring connections. Make sure that the thermostat connection plug is securely connected.
				Loose wiring	Check all wiring connections at motor and control box. Check that power and control harnesses are securely connected.
				Interface board problems	Make sure that the interface board is not damged and that all DIP switches are in the proper configuration (refer to the blower performance tables).
				Faulty motor	Check supply voltage to the motor. Check that all motor wires are secure. Move the "TEST" DIP switch to "ON" and the other switches to "OFF" on the "ADJUST" switch block on the interface board - the motor should run at 70% torque when "G" is called. With power off spin the motor shaft - noise, resistance or uneven motion can be signs of motor failure.
Unit not shifting into cooling	X		Reversing valve solenoid energized	Faulty solenoid	Check that the reversing valve solenoid is receiving 24 VAC. If so, check the resistance of the solenoid - an open circuit may indicate a burned out solenoid.
			Reversing valve solenoid not energized	Miswired/faulty thermostat	Check that the reversing valve theromstat wire is connected to the "O" terminal of the thermostat. Check for a contact closure between "O" and "R".
				Loose wire on "O" terminal	Check that the wires from the thermostat to the unit are securely connected and that the wires from the electrical box to the reversing valve are connected.
Excessively cold supply air temperature in cooling or excessively hot supply air temperature in heating	X	X	Reduced airflow	Dirty Filter	Replace filter.
				Fan speed too low	Consult blower performance table and increase fan speed if possible.
				Excessive duct pressure drop	Consult blower performance table and increase fan speed if possible.
Excessively warm supply air temperature in cooling and/or excessively cool air in heating	X	X	Airflow too high	Fan speed setting too high	Consult blower performance table and reduce fan speed if possible.
			High or low water temperature	Inlet water temperature out of range	Check unit capacity vs. water temperature.
			Air leakage	Leaky ductwork	Inspect ductwork.
			Loss of refrigeration capacity	Low refrigerant	Check refrigerant pressures with gage set.
High humidity	X		Airflow too high	Fan speed setting too high	Consult blower performance table and reduce fan speed if possible.
			Loss of refrigeration capacity	Low refrigerant	Check refrigerant pressures with gage set.
			Short cycling	Unit oversized	Check unit performance against building load calculations.
				Poor thermostat location	Make sure that thermostat is not located by a supply-air duct.

Table 33 — Troubleshooting (cont)

FAULT	COOLING	HEATING	CHECK	POSSIBLE CAUSE	SOLUTION
Objectionable noise levels	X	X	Air noise	Poor ductwork/grille design	Ensure ductwork and grilles are properly sized for unit airflow.
				Fan speed setting too high	Consult blower performance table and reduce fan speed if possible.
			Structure Bourne noise	Unit not mounted on full vibration pad	Mount unit on a vibration pad.
				Unit not connected with flexible conduit, water lines and/or ductwork	Install unit in accordance with instructions.
				Unit cabinet touching wall or other building component	Adjust unit location to avoid unit touching structure.
	X		Compressor noise	High water temperature or low water flow rate elevating head pressure	Increase water flow rate and/or reduce water temperature if possible.
				Scaled or fouled water coil elevating heat pressure	Clean/descale water coil.
		X		Low airflow elevating head pressure	Check filter.
					Increase fan speed.
	X	X	Water hammer	Fast closing valves installed	Change valves to slow-close type.

© 2021 Carrier

Manufacturer reserves the right to discontinue, or change at any time, specifications or designs without notice and without incurring obligations.
Catalog No. 04-53500280-01 Printed in U.S.A. Form 50PC-8SI Pg 68 6-21 Replaces: 50PC-7SI

50PCH,PCV
START-UP CHECKLIST
(Remove and use for job file.)

NOTE: To avoid injury to personnel and damage to equipment or property when completing the procedures listed in this start-up checklist, use good judgment, follow safe practices, and adhere to the safety considerations/information as outlined in preceding sections of this Installation Instruction document.

CUSTOMER: _____ JOB NAME: _____

MODEL NO.: _____ SERIAL NO.: _____ DATE: _____

I. PRE-START-UP

DOES THE UNIT VOLTAGE CORRESPOND WITH THE SUPPLY VOLTAGE AVAILABLE? (Y/N) _____

HAVE THE POWER AND CONTROL WIRING CONNECTIONS BEEN MADE AND TERMINALS TIGHT? (Y/N) _____

HAVE WATER CONNECTIONS BEEN MADE AND IS FLUID AVAILABLE AT HEAT EXCHANGER? (Y/N) _____

HAS PUMP BEEN TURNED ON AND ARE ISOLATION VALVES OPEN? (Y/N) _____

HAS CONDENSATE CONNECTION BEEN MADE AND IS A TRAP INSTALLED? (Y/N) _____

IS AN AIR FILTER INSTALLED? (Y/N) _____

II. START-UP

IS FAN OPERATING WHEN COMPRESSOR OPERATES? (Y/N) _____

IF 3-PHASE SCROLL COMPRESSOR IS PRESENT, VERIFY PROPER ROTATION PER INSTRUCTIONS. (Y/N) _____

UNIT VOLTAGE — COOLING OPERATION

PHASE AB VOLTS_____PHASE BC VOLTS_____(if 3 phase)PHASE CA VOLTS_____(if 3 phase)

PHASE AB AMPS_____PHASE BC AMPS_____(if 3 phase)PHASE CA AMPS _____(if 3 phase)

CONTROL VOLTAGE

IS CONTROL VOLTAGE ABOVE 21.6 VOLTS? (Y/N) _____.
IF NOT, CHECK FOR PROPER TRANSFORMER CONNECTION.

TEMPERATURES

FILL IN THE ANALYSIS CHART ATTACHED.

COAXIAL HEAT EXCHANGER	COOLING CYCLE: FLUID IN	_____	F	FLUID OUT	_____	F	_____	PSI	_____ FLOW
	HEATING CYCLE: FLUID IN	_____	F	FLUID OUT	_____	F	_____	PSI	_____ FLOW
AIR COIL	COOLING CYCLE: AIR IN	_____	F	AIR OUT	_____	F			
	HEATING CYCLE: AIR IN	_____	F	AIR OUT	_____	F			

HEATING CYCLE ANALYSIS

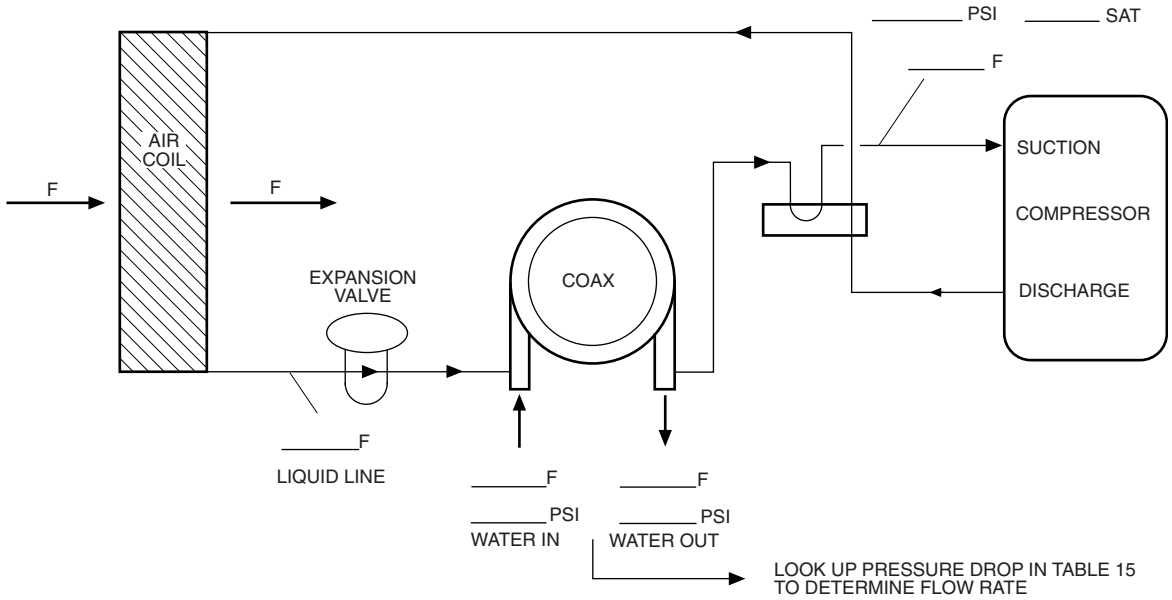

COOLING CYCLE ANALYSIS

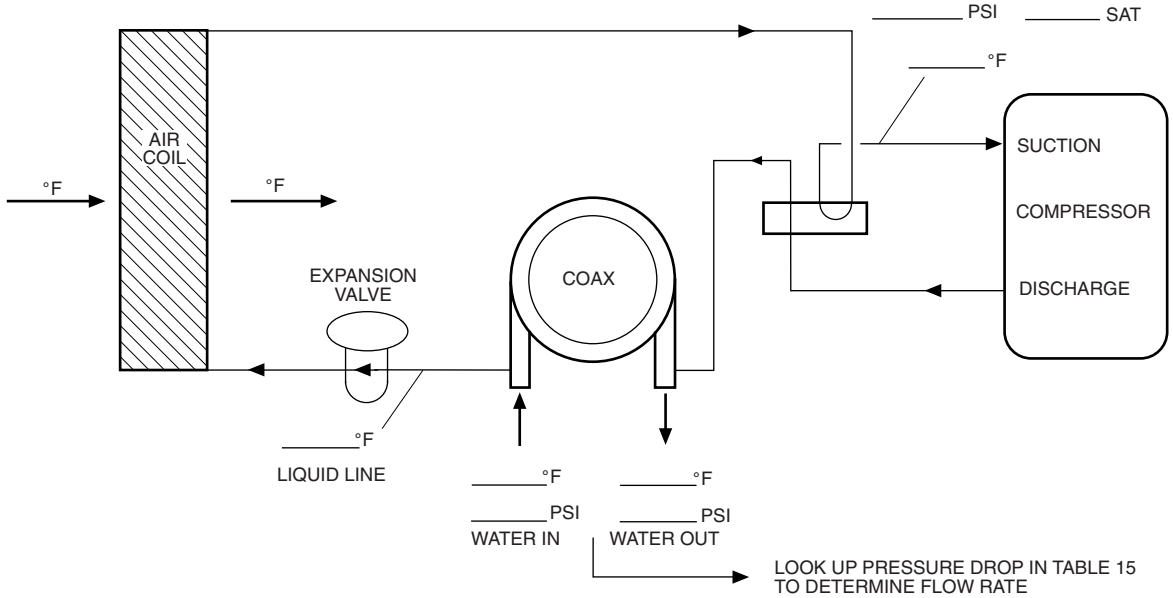

HEAT OF EXTRACTION (ABSORPTION) OR HEAT OF REJECTION =

_____ FLOW RATE (GPM) x _____ TEMP. DIFF. (DEG. F) x _____ FLUID FACTOR* = _____
(Btu/hr)

SUPERHEAT = SUCTION TEMPERATURE – SUCTION SATURATION TEMPERATURE
= ____ (DEG F)

SUBCOOLING = DISCHARGE SATURATION TEMPERATURE – LIQUID LINE TEMPERATURE
= ____ (DEG F)

*Use 500 for water, 485 for antifreeze.

CUT ALONG DOTTED LINE

CUT ALONG DOTTED LINE

© 2021 Carrier

8733829524

Manufacturer reserves the right to discontinue, or change at any time, specifications or designs without notice and without incurring obligations.