AquaEdge® 19XR
Semi-Hermetic Centrifugal Liquid Chillers with PIC6 Controls and R-134a/R-513A 50/60 Hz

Installation Instructions

CONTENTS

Page

SAFETY CONSIDERATIONS 1
INTRODUCTION 3
General 3
Job Data 3
INSTALLATION 3
Step 1 — Receive the Machine 3
- INSPECT SHIPMENT
- IDENTIFY MACHINE
- INSTALLATION REQUIREMENTS
- PROVIDE MACHINE PROTECTION

Step 2 — Rig the Machine 4
- RIG MACHINE ASSEMBLY
- 19XR2-E RIG MACHINE COMPONENTS
- 19XR6/7 RIG MACHINE COMPONENTS

Step 3 — Install Machine Supports 57
- INSTALL STANDARD ISOLATION
- INSTALL ACCESSORY ISOLATION (IF REQUIRED)
- INSTALL SPRING ISOLATION

Step 4 — Connect Piping 59
- INSTALL WATER PIPING TO HEAT EXCHANGERS
- INSTALL VENT PIPING TO RELIEF VALVES

Step 5 — Make Electrical Connections 67
- CONNECT CONTROL INPUTS
- CONNECT CONTROL OUTPUTS
- CONNECT STARTER
- FIELD WIRING
- CARRIER COMFORT NETWORK INTERFACE

Step 6 — Install Field Insulation 103
- 19XR
- 19XRV

INSTALLATION START-UP REQUEST CHECKLIST CL-1

SAFETY CONSIDERATIONS

Centrifugal liquid chillers are designed to provide safe and reliable service when operated within design specifications. When operating this equipment, use good judgment and safety precautions to avoid damage to equipment and property or injury to personnel.

Be sure you understand and follow the procedures and safety precautions contained in the machine instructions, as well as those listed in this guide.

⚠ DANGER

Failure to follow these procedures will result in severe personal injury or death.

DO NOT VENT refrigerant relief devices within a building. Outlet from rupture disc or relief valve must be vented outdoors in accordance with the latest edition of ANSI/ASHRAE 15 (American National Standards Institute/American Society of Heating, Refrigerating and Air-Conditioning Engineers) (Safety Code for Mechanical Refrigeration). The accumulation of refrigerant in an enclosed space can displace oxygen and cause asphyxiation.

PROVIDE adequate ventilation in accordance with ANSI/ASHRAE 15, especially for enclosed and low overhead spaces. Inhalation of high concentrations of vapor is harmful and may cause heart irregularities, unconsciousness, or death. Intentional misuse can be fatal. Vapor is heavier than air and reduces the amount of oxygen available for breathing. Product causes eye and skin irritation. Decomposition products are hazardous.

DO NOT USE OXYGEN to purge lines or to pressurize a machine for any purpose. Oxygen gas reacts violently with oil, grease, and other common substances.

DO NOT USE air to leak test. Use only refrigerant or dry nitrogen.

NEVER EXCEED specified test pressures. VERIFY the allowable test pressure by checking the instruction literature and the design pressures on the equipment nameplate.

DO NOT VALVE OFF any safety device.

BE SURE that all pressure relief devices are properly installed and functioning before operating any machine.

RISK OF INJURY OR DEATH by electrocution. High voltage is present on motor leads even though the motor is not running when a solid state or inside-delta mechanical starter is used. Open the power supply disconnect before touching motor leads or terminals.

Manufacturer reserves the right to discontinue, or change at any time, specifications or designs without notice and without incurring obligations.

⚠ WARNING

Failure to follow these procedures may result in personal injury or death.

DO NOT USE TORCH to remove any component. System contains oil and refrigerant under pressure.

To remove a component, wear protective gloves and goggles and proceed as follows:

1. Shut off electrical power to unit.
2. Recover refrigerant to relieve all pressure from system using both high-pressure and low pressure ports.
3. Traces of vapor should be displaced with nitrogen and the work area should be well ventilated. Refrigerant in contact with an open flame produces toxic gases.
4. Cut component connection tubing with tubing cutter and remove component from unit. Use a pan to catch any oil that may come out of the lines and as a gage for how much oil to add to the system.
5. Carefully unsweat remaining tubing stubs when necessary. Oil can ignite when exposed to torch flame.

DO NOT USE eyebolts or eyebolt holes to rig machine sections or the entire assembly.

DO NOT work on high-voltage equipment unless you are a qualified electrician.

DO NOT WORK ON electrical components, including control panels, switches, starters, or oil heater until you are sure ALL POWER IS OFF and no residual voltage can leak from capacitors or solid-state components.

LOCK OPEN AND TAG electrical circuits during servicing. IF WORK IS INTERRUPTED, confirm that all circuits are de-energized before resuming work.

AVOID SPILLING liquid refrigerant on skin or getting it into the eyes. USE SAFETY GOGGLES. Wash any spills from the skin with soap and water. If liquid refrigerant enters the eyes, IMMEDIATELY FLUSH EYES with water and consult a physician.

NEVER APPLY an open flame or live steam to a refrigerant cylinder. Dangerous over pressure can result. When it is necessary to heat refrigerant, use only warm (110°F [43°C]) water.

DO NOT REUSE disposable (nonreturnable) cylinders or attempt to refill them. It is DANGEROUS AND ILLEGAL. When cylinder is emptied, evacuate remaining gas pressure, loosen the collar, and unscrew and discard the valve stem. DO NOT INCINERATE.

CHECK THE REFRIGERANT TYPE before adding refrigerant to the machine. The introduction of the wrong refrigerant can cause machine damage or malfunction.

Operation of this equipment with refrigerants other than those cited herein should comply with ANSI/ASHRAE 15 (latest edition). Contact Carrier for further information on use of this machine with other refrigerants.

BEFORE ADDING OIL to the compressor, be sure to check the oil type. Using the wrong type of oil could result in damage to the unit.

DO NOT ATTEMPT TO REMOVE fittings, covers, etc., while machine is under pressure or while machine is running. Be sure pressure is at 0 psig (0 kPa) before breaking any refrigerant connection.

CAREFULLY INSPECT all relief valves, rupture discs, and other relief devices AT LEAST ONCE A YEAR. If machine operates in a corrosive atmosphere, inspect the devices at more frequent intervals.

⚠ WARNING

DO NOT ATTEMPT TO REPAIR OR RECONDITION any relief valve when corrosion or build-up of foreign material (rust, dirt, scale, etc.) is found within the valve body or mechanism. Replace the valve.

DO NOT install relief devices in series or backwards.

USE CARE when working near or in line with a compressed spring. Sudden release of the spring can cause it and objects in its path to act as projectiles.

Prior to installing or servicing this equipment, ensure that personal protective equipment (PPE) is worn as required per OSHA or other local regulations.

For servicing or installing components where there is a risk of arc flash, the technicians must wear personal protective equipment as identified in NFPA (National Fire Protection Association) 70E or other local country-specific requirements for arc flash protection.

⚠ CAUTION

Failure to follow these procedures may result in personal injury or damage to equipment.

DO NOT STEP on refrigerant lines. Broken lines can whip about and release refrigerant, causing personal injury.

DO NOT climb over a machine. Use platform, catwalk, or staging. Follow safe practices when using ladders.

USE MECHANICAL EQUIPMENT (crane, hoist, etc.) to lift or move inspection covers or other heavy components. Even if components are light, use mechanical equipment when there is a risk of slipping or losing your balance.

BE AWARE that certain automatic start arrangements CAN ENGAGE THE STARTER, TOWER FAN, OR PUMPS. Open the disconnect *ahead of* the starter, tower fan, and pumps. Shut off the machine or pump before servicing equipment.

USE only repaired or replacement parts that meet the code requirements of the original equipment.

DO NOT VENT OR DRAIN waterboxes containing industrial brines, liquid, gases, or semisolids without the permission of your process control group.

DO NOT LOOSEN waterbox cover bolts until the waterbox has been completely drained.

DOUBLE-CHECK that coupling nut wrenches, dial indicators, or other items have been removed before rotating any shafts.

DO NOT LOOSEN a packing gland nut before checking that the nut has a positive thread engagement.

PERIODICALLY INSPECT all valves, fittings, and piping for corrosion, rust, leaks, or damage.

PROVIDE A DRAIN connection in the vent line near each pressure relief device to prevent a build-up of condensate or rain water.

DO NOT re-use compressor oil or any oil that has been exposed to the atmosphere. Dispose of oil per local codes and regulations.

DO NOT leave refrigerant system open to air any longer than the actual time required to service the equipment. Seal circuits being serviced and charge with dry nitrogen to prevent oil contamination when timely repairs cannot be completed.

INTRODUCTION

General

The 19XR machine is factory assembled, wired, and leak tested. Installation (not by Carrier) consists primarily of establishing water and electrical services to the machine. The rigging, installation, field wiring, field piping, and insulation of waterbox covers are the responsibility of the contractor and/or customer. Carrier has no installation responsibilities for the equipment.

Job Data

Necessary information consists of:

- job contract or specifications
- machine location prints
- rigging information
- piping prints and details
- field wiring drawings
- starter manufacturer's installation details
- Carrier certified print

INSTALLATION

Step 1 — Receive the Machine

INSPECT SHIPMENT

⚠ CAUTION

Do not open any valves or loosen any connections. The 19XR machine may be shipped with a nitrogen holding charge in both modules. Damage to machine may result.

1. Inspect for shipping damage while machine is still on shipping conveyance. If machine appears to be damaged or has been torn loose from its anchorage, have it examined by transportation inspectors before removal. Forward claim papers directly to transportation company. *Manufacturer is not responsible for any damage incurred in transit.*
2. Check all items against shipping list. Immediately notify the nearest Carrier representative if any item is missing.
3. To prevent loss or damage, leave all parts in original packages until beginning installation. All openings are closed with covers or plugs to prevent dirt and debris from entering machine components during shipping. A full operating oil charge is placed in the oil sump before shipment.

IDENTIFY MACHINE

The machine model number, serial number, and heat exchanger sizes are stamped on machine identification nameplate (Fig. 1-3). Check this information against shipping papers and job data.

INSTALLATION REQUIREMENTS

Prior to starting the chiller's electrical installation, certain requirements should be checked. Input power wire sizes, branch circuit protection, and control wiring are all areas that need to be evaluated. See Fig. 4-6 for general layouts. See Fig. 7 and 8 for dimensional information.

Determine Wire Size Requirements

Wire size should be determined based on the size of the conduit openings, and applicable local, national, and international codes (e.g., NEC [National Electric Code]/CEC [California Energy Commission] regulations). General recommendations are included in the Carrier field wiring drawings.

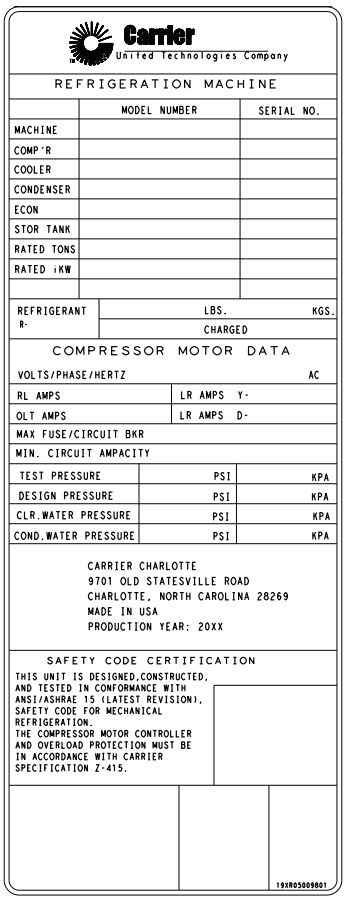

Fig. 1 — 19XR Refrigeration Machine Nameplate

Conduit Entry Size

It is important to determine the size of the conduit openings in the enclosure power entry plate so that the wire planned for a specific entry point will fit through the opening. Do NOT punch holes or drill into the top surface of control panels. Knockouts are provided on the enclosure.

Recommended Control and Signal Wire Sizes

The recommended minimum size wire to connect I/O signals to the control terminal blocks is 18 AWG (American Wire Gage). Recommended terminal tightening torque is 7 to 9 in.-lb (0.79 to 1.02 N-m).

Recommended Airflow Clearances

Be sure there is adequate clearance for air circulation around the enclosure. A 6-in. (152.4 mm) minimum clearance is required wherever vents are located in the control enclosures.

Service Clearances

Verify that there are adequate service clearances as identified in Fig. 7 and 8.

Verify Adequate Power Supply

It is important to verify that the building power will meet the input power requirements of the Machine Electrical Data nameplate input power rating. Be sure the input power to the chiller corresponds to the chiller's nameplate voltage, current, and frequency.

PROVIDE MACHINE PROTECTION

Store machine and starter indoors, protected from construction dirt and moisture. Inspect under shipping tarps, bags, or crates to be sure that water has not collected during transit. Keep protective shipping covers in place until machine is ready for installation.

⚠ CAUTION

Freezing water can damage equipment. If machine can be or possibly has been exposed to freezing temperatures after water circuits have been installed, open waterbox drains and remove all water from cooler and condenser. Leave drains open until system is filled.

It is important to properly plan before installing a 19XR unit to ensure that the environmental and operating conditions are satisfactory and the machine is protected. The installation must comply with all requirements in the certified prints.

Operating Environment

Chiller should be installed in an indoor environment where the ambient temperature is between 40 and 104°F (4 and 40°C) with a relative humidity of 95% or less, non-condensing. To ensure that electrical components operate properly, do not locate the chiller in an area exposed to dust, dirt, corrosive fumes, or excessive heat and humidity.

NOTE: NEMA Type 1 enclosures are constructed for indoor use to provide a degree of protection to personnel against incidental contact with the enclosed equipment and to provide a degree of protection against falling dirt. This type of enclosure does not protect against water, dust, moisture or airborne contaminants.

Step 2 — Rig the Machine

The 19XR machine can be rigged as an entire assembly. It also has flanged connections that allow the compressor, cooler, and condenser sections to be separated and rigged individually. See Fig. 9-14 for equipment rigging.

RIG MACHINE ASSEMBLY

See rigging instructions on label attached to machine. Refer to rigging guide (Fig. 9-14), dimensions in Fig. 7 and 8, and physical data in Tables 1-32. *Lift machine only from the points indicated in rigging guide.* Each lifting cable or chain must be capable of supporting the entire weight of the machine.

Contractors are not authorized to disassemble any part of the chiller without Carrier's supervision. Any request otherwise must be approved in writing by the Carrier Technical Service Manager.

NOTE: Carrier suggests that a structural engineer be consulted if transmission of vibrations from mechanical equipment is of concern.

⚠ WARNING

Lifting chiller or components from points other than those specified may result in serious damage to the machine or personal injury. Rigging equipment and procedures must be adequate for maximum chiller weight. See Fig. 9-14 for maximum chiller and component weights.

19XR– 52 51 3 8 H UG T[a] 64 –

Description
19XR — High Efficiency Semi-Hermetic Centrifugal Liquid Chiller
19XRV — High Efficiency Semi-Hermetic Centrifugal Liquid Chiller with Unit-Mounted VFD

Evaporator Size[b]
10-12 (Frame 1)
15-17 (Frame 1)
20-22 (Frame 2)
30-32 (Frame 3)
35-37 (Frame 3)
40-42 (Frame 4)
45-47 (Frame 4)
50-54 (Frame 5)
5A-5C (Frame 5)[c]
55-59 (Frame 5)
5F-5H (Frame 5)[c]
5K-5R (Frame 5)[d]
5T-5Z (Frame 5)[d]
60-64 (Frame 6)
6K-6R (Frame 6)[d]
65-69 (Frame 6)
6T-6Z (Frame 6)[d]
70-74 (Frame 7)
7K-7R (Frame 7)[d]
75-79 (Frame 7)
7T-7Z (Frame 7)[d]
80-84 (Frame 8)
8K-8R (Frame 8)[d]
85-89 (Frame 8)
8T-8Z (Frame 8)[d]

Condenser Size[b]
10-12 (Frame 1)
15-17 (Frame 1)
20-22 (Frame 2)
30-32 (Frame 3)
35-37 (Frame 3)
40-42 (Frame 4)
45-47 (Frame 4)
50-54 (Frame 5)
55-59 (Frame 5)
60-64 (Frame 6)
65-69 (Frame 6)
70-74 (Frame 7)
75-79 (Frame 7)
80-84 (Frame 8)
85-89 (Frame 8)

Special Order Indicator
– — Standard
S — Special Order

Motor Voltage Code

Code	Volts-Phase-Hertz
60	200-3-60
61	230-3-60
62	380-3-60
63	416-3-60
64	460-3-60
65	575-3-60
66	2400-3-60
67	3300-3-60
68	4160-3-60
69	6900-3-60
50	230-3-50
52	400-3-50
53	3000-3-50
54	3300-3-50
55	6300-3-50
5A	10000-3-50
5B	11000-3-50
6A	11000-3-60
6B	11000-3-60
6C	13800-3-60

Motor Efficiency Code
Compressor Frame 2, 3
H — High Efficiency
S — Standard Efficiency

Gear Code
Compressor Frame C
C,E,G,J,M,P — Gear Ratio

Compressor Frame E
A,B,C,D,E— A-E Gear Ratio

Compressor Frame 3, **U** Motor
R,S,T,U,V,W— R-W Gear Ratio

Motor Code[e]

Impeller Diameter

Impeller Shroud

Compressor Frame
2, 3 — Single-Stage
C, E — Two-Stage

a. Digit 15 will refer to the Gear Code for the following models:
   1. Digit 10 (Compressor Frame) is C or E.
   2. Digit 10 (Compressor Frame) is 3 *and* Digit 13 of the Motor Code is U.
b. Frame sizes 1 through 6 available on single-stage units only.
c. Refer to 19XR,XRV Computer Selection Program for details on these sizes.
d. Frame sizes with K-R and T-Z are with 1-in. OD evaporator tubing.
e. Refer to the 19XR,XRV Computer Selection Program for motor size details.

Fig. 2 — 19XR,XRV Single-Stage Compressor and Two-Stage Compressor Frame Size C and E

19XR– A45 A47 636 M N 7 –

Description
19XR — High Efficiency Semi-Hermetic Centrifugal Liquid Chiller

Evaporator Size Code (Digits 6, 7, 8)
A40-A42
A45-A47
A4A-A4C[a]
A4F-A4H[a]
A60-A62
A65-A67
A6A-A6C[a]
A6F-A6H[a]
B60-B62[b]
B65-B67[b]
B80-B82[b]
B85-B87[b]
B6A-B6C[a,b]
B6F-B6H[a,b]
B8A-B8C[a,b]
B8F-B8H[a,b]
C60-C62[b]
C65-C67[b]
C80-C82[b]
C85-C87[b]
C6A-C6C[a,b]
C6F-C6H[a,b]
C8A-C8C[a,b]
C8F-C8H[a,b]

Condenser Size Code (Digits 9, 10, 11)
A40-A42
A45-A47
A4A-A4C[a]
A4F-A4H[a]
A60-A62
A65-A67
A6A-A6C[a]
A6F-A6H[a]
B40-B42
B45-B47
B4A-B4C[a]
B4F-B4H[a]
B60-B62[a]
B65-B67[a]
B6A-B6C[a]
B6F-B6H[a]
C60-C62[b]
C65-C67[b]
C80-C82[b]
C85-C87[b]
C6A-C6C[a,b]
C6F-C6H[a,b]
C8A-C8C[a,b]
C8F-C8H[a,b]
D60-D62[b]
D65-D67[b]
D80-D82[b]
D85-D87[b]
D6A-D6C[a,b]
D6F-D6H[a,b]
D8A-D8C[a,b]
D8F-D8H[a,b]

Special Order Indicator
– — Standard
S — Special Order

Motor Voltage Code
Code Volts-Phase-Hertz
2 — 400-3-50 (19XR6 only)
4 — 3000-3-50
5 — 3300-3-50
6 — 6300-3-50
7 — 10000-3-50
8 — 11000-3-50
A — 380-3-60 (19XR6 only)
C — 460-3-60 (19XR6 only)
E — 2400-3-60
F — 3300-3-60
G — 4160-3-60
H — 6900-3-60
J — 11000-3-60
K — 13800-3-60

Motor Code[c]

Gear Code
Compressor Frame Size 6
E
J
M
P
Compressor Frame Size 7
R
T
V
X
Y

Compressor Size Code
Frame Size (12th Digit)
6 — Frame Size 6
7 — Frame Size 7
Shroud Size (13th Digit)
1 (Frame Size 7 Only)
2
3
4
5 (Frame 7 Only)
Impeller Diameter (14th Digit)
2
4
6
8
0

a. Frame sizes with A-C and F-H are with 1-in. OD tubing.
b. Heat exchanger available with frame 7 compressor only.
c. Refer to the 19XR,XRV Computer Selection Program for motor size details.

SERIAL NUMBER BREAKDOWN

27 18 Q 19843

Week of Year
Year of Manufacture
Place of Manufacture
Unique Number

Fig. 3 — 19XR Two-Stage Compressor Frame Size 6 and 7

FRONT VIEW

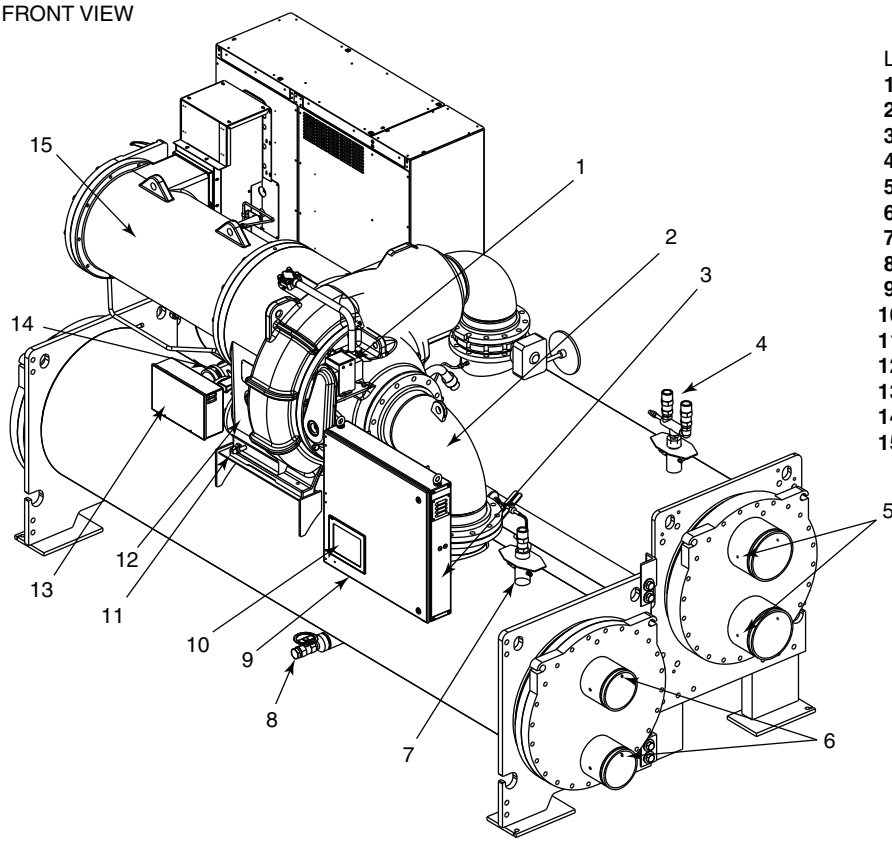

LEGEND

1 — Guide Vane Actuator
2 — Suction Elbow
3 — Chiller Identification Nameplate
4 — Condenser Dual Relief Valves
5 — Condenser In/Out Temperature Thermistors
6 — Evaporator In/Out Temperature Thermistors
7 — Evaporator Pressure Transducer
8 — Refrigerant Storage Tank Connection
9 — Control Panel
10 — Carrier Controller HMI
11 — Oil Drain/Charger Valve
12 — Oil Level Sightglass
13 — Power Panel
14 — Refrigerant Oil Cooler (not shown)
15 — Compressor Motor Housing

REAR VIEW

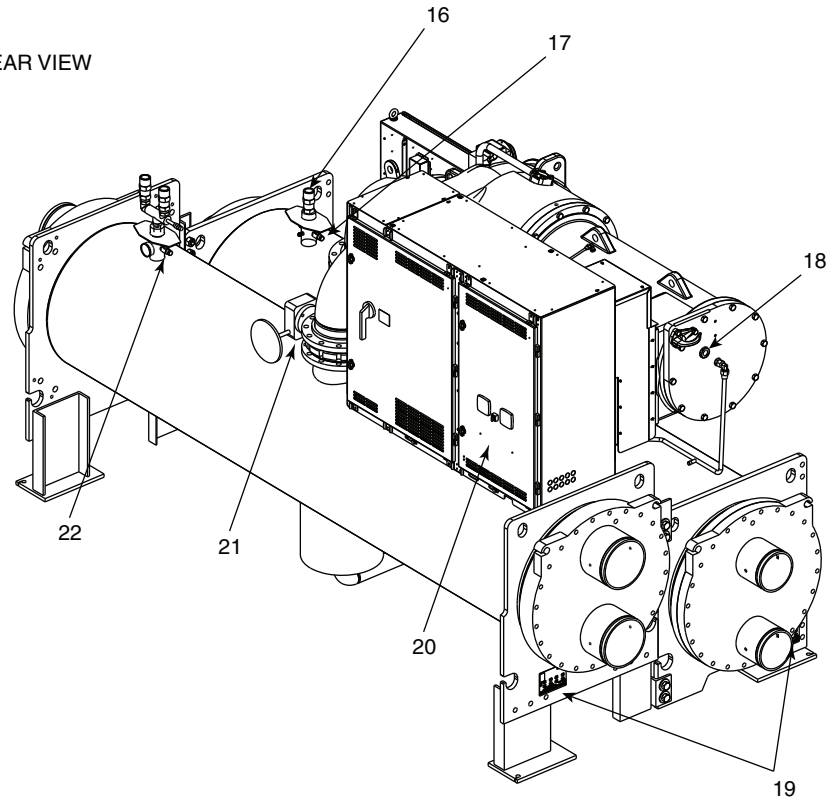

LEGEND

16 — Evaporator Relief Valve
17 — Refrigerant Charging Valve
18 — Motor Sightglass
19 — ASME Nameplates
20 — Starter/VFD
21 — Discharge Isolation Valve (Optional)
22 — Refrigerant Charging Valve/ Pump Out Connection

Fig. 4 — 19XR,XRV Single-Stage Compressor, Frame Size 2, 3

FRONT VIEW

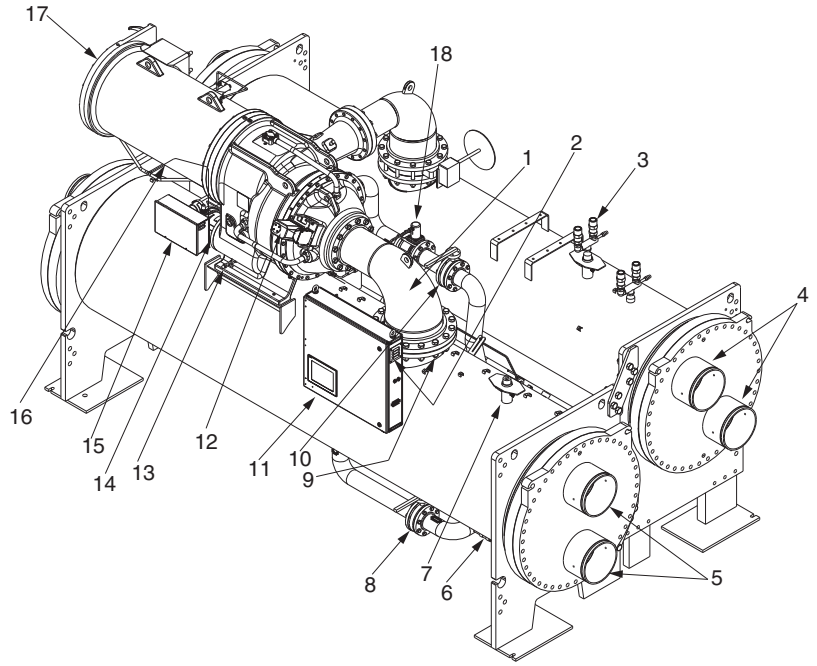

LEGEND

1 — Suction Elbow
2 — Chiller Identification Nameplate
3 — Condenser Auto Reset Relief Valves
4 — Condenser In/Out Temperature Thermistors
5 — Evaporator In/Out Temperature Thermistors
6 — Refrigerant Storage Tank Connection Valve (barely visible)
7 — Evaporator Pressure Transducer
8 — Liquid Line Isolation Valve (optional)
9 — Typical Flange Connection
10 — Refrigerant Isolation Valve
11 — Control Panel (PIC6)
12 — Guide Vane Actuator
13 — Oil Level Sight Glasses
14 — Oil Drain Charging Valve
15 — Auxiliary Power Panel
16 — Refrigerant Oil Evaporator (hidden)
17 — Compressor Motor Housing
18 — Damper Valve

REAR VIEW

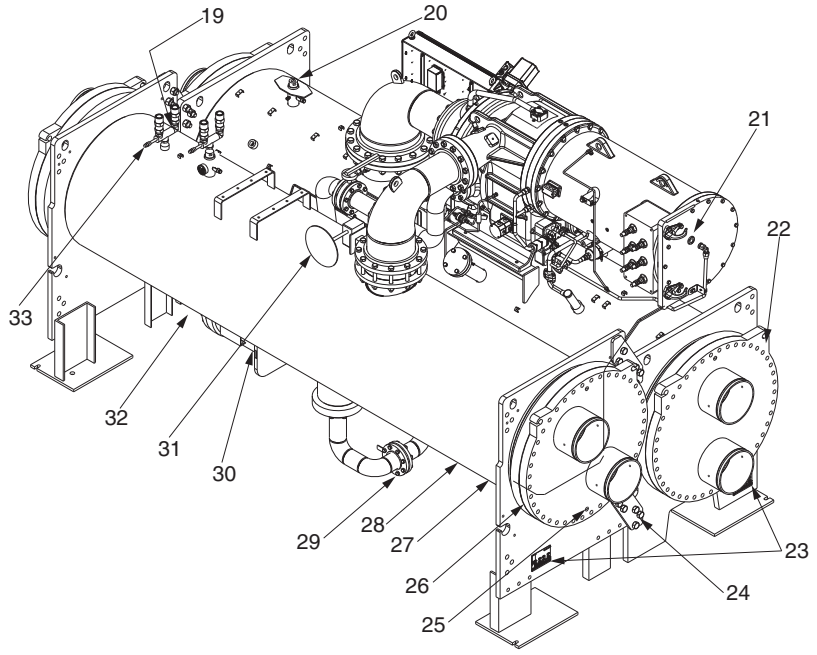

LEGEND

19 — Refrigerant Charging Valve/Pumpout Connection
20 — Evaporator Auto. Reset Relief Valves
21 — Motor Sight Glass
22 — Evaporator Waterbox Cover
23 — ASME Nameplate
24 — Vessel Take-Apart Connector
25 — Typical Waterbox Drain Port
26 — Condenser Waterbox Cover
27 — Refrigerant Moisture/Flow Indicator (hidden)
28 — Refrigerant Filter/Drier (hidden)
29 — Linear Float Valve Chamber Orifice
30 — Economizer Assembly
31 — Discharge Isolation Valve (optional)
32 — Economizer Float Ball Valve Assembly (far end of economizer assembly)
33 — Condenser Pressure Transducer

Fig. 5 — 19XR,XRV Two-Stage Compressor Frame Size C and E

FRONT VIEW

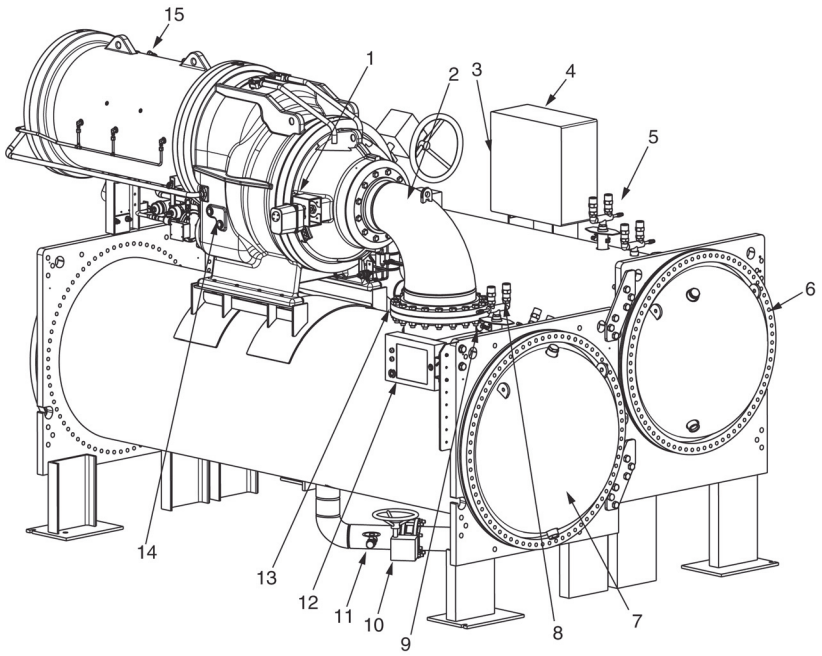

LEGEND

1 — Guide Vane Actuator*
2 — Suction Elbow
3 — Chiller Identification Nameplate
4 — Auxiliary Power Panel
5 — Condenser Auto. Reset Relief Valves
6 — Condenser Return End Waterbox Cover
7 — Evaporator Return End Waterbox Cover
8 — Evaporator Auto. Reset Relief Valves
9 — Evaporator Pressure Transducer
10 — Liquid Line Isolation Valve (Optional)
11 — Refrigerant Storage Tank Connection Valve
12 — HMI (Human Machine Interface) Panel
13 — Typical Flange Connection
14 — Oil Level Sight Glasses
15 — Compressor Motor Housing

*See certified drawing for Frame 7 location.

REAR VIEW

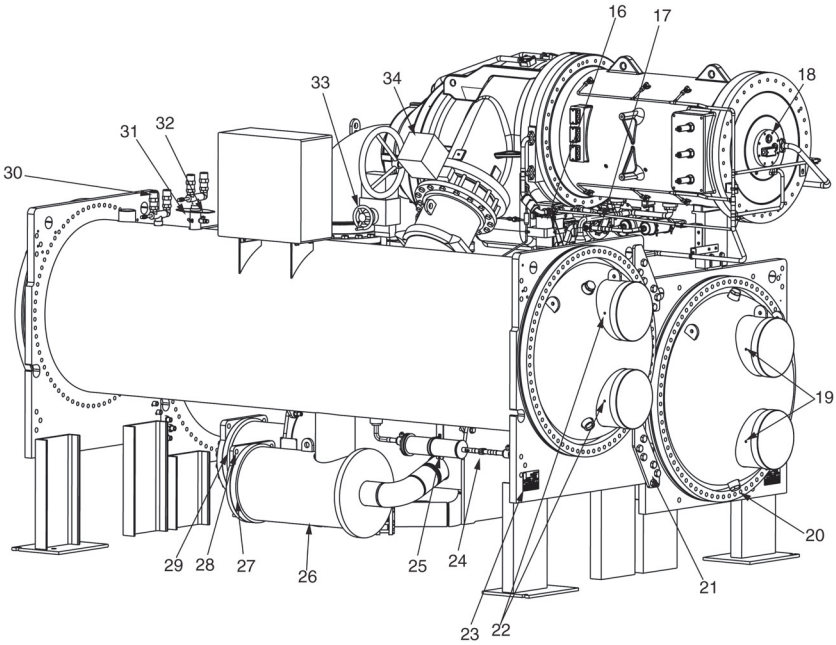

LEGEND

16 — Oil Evaporator
17 — Oil Drain Changing Valve (Hidden)
18 — Motor Sight Glass
19 — Evaporator In/Out Temperature Thermistors
20 — Typical Waterbox Drain Port
21 — Vessel Take-Apart Connector
22 — Condenser In/Out Temperature Thermistors
23 — ASME Nameplate
24 — Refrigerant Moisture/Flow Indicator
25 — Refrigerant Filter/Drier
26 — High Side Float Chamber
27 — High Side Float Ball Valve Assembly (Inside)
28 — Economizer Assembly
29 — Economizer Float Ball Assembly (Inside)
30 — Evaporator Auto. Reset Relief Valve
31 — Condenser Pressure Transducer
32 — Refrigerant Charging Valve/Pumpout Connection
33 — Damper Valve
34 — Discharge Isolation Valve (Optional)

NOTE: Frame 6 is shown.

Fig. 6 — 19XR Two-Stage Compressor Frame Sizes 6 and 7

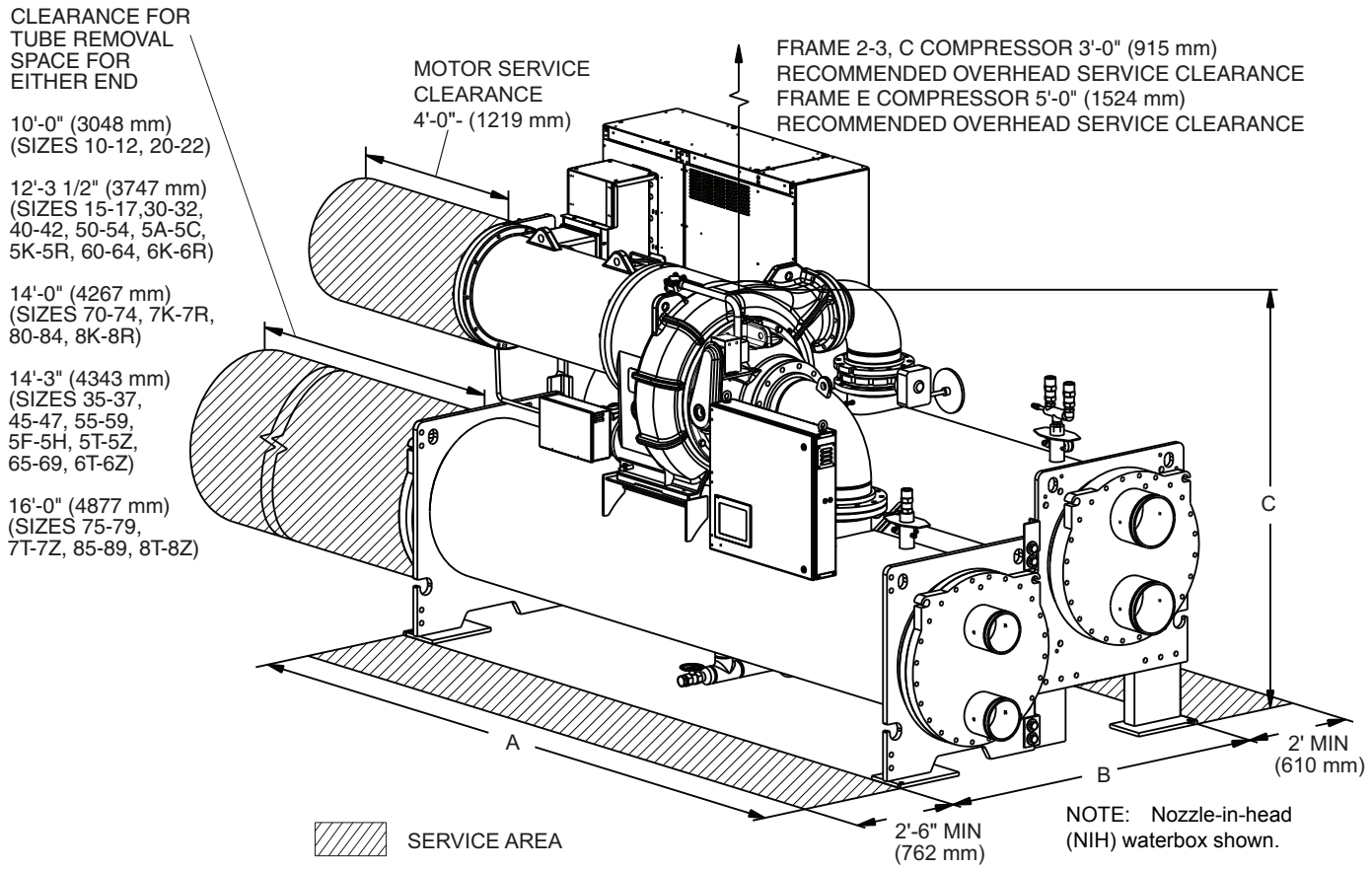

19XR,XRV Dimensions — Single-Stage Compressor and Two-Stage Compressor Frame Size C and E (Marine Waterbox)[a,b,c,d,e,f,g]

HEAT EXCHANGER SIZE	A (LENGTH, MARINE WATERBOX)				19XR B WIDTH		19XRV B WIDTH		19XR,XRV C HEIGHT
	2-Pass[h]		1 or 3-Pass[i]						
	ft-in.	mm	ft-in.	mm	ft-in.	mm	ft-in.	mm	
10 to 12	NA	NA	NA	NA	NA	NA	NA	NA	See Note f
15 to 17	NA	NA	NA	NA	NA	NA	NA	NA	
20 to 22	12-5-1/2	3797	14-1-1/4	4299	6-1-1/16	1856	6-1-1/16	1856	
30 to 32	14-9	4496	16-4-3/4	4997	6-1-1/16	1856	6-1-1/16	1856	
35 to 37	16-5-1/2	5017	18-1-1/4	5518	6-1-1/16	1856	6-1-1/16	1856	
40 to 42	15-2-3/4	4642	16-8-1/4	5086	6-3-1/4	1911	6-3-1/4	1911	
45 to 47	16-11-1/4	5163	18-4-3/4	5607	6-3-1/4	1911	6-3-1/4	1911	
50 to 54, 5K to 5R	15-3-1/2	4661	16-8-1/2	5093	6-8-7/8	2054	6-8-7/8	2054	
5A to 5C	15-3-1/2	4661	16-8-1/2	5093	6-8-7/8	2054	6-8-7/8	2054	
55 to 59, 5T to 5Z	17-0	5182	18-5	5613	6-8-7/8	2054	6-8-7/8	2054	
5F to 5H	17-0	5182	18-5	5613	6-8-7/8	2054	6-8-7/8	2054	
60 to 64, 6K to 6R	15-4-1/8	4677	16-8-3/4	5099	6-11-3/4	2127	6-11-3/4	2127	
65 to 69, 6T to 6Z	17-0-5/8	5197	18-5-1/4	5620	6-11-3/4	2127	6-11-3/4	2127	
70 to 74, 7K to 7R	18-3-5/8	5579	19-9-3/4	6039	8-8-1/8	2645	9-6-3/8	2905	
75 to 79, 7T to 7Z	20-3-5/8	6188	21-9-3/4	6649	8-8-1/8	2645	9-6-3/8	2905	
80 to 84, 8K to 8R	18-4	5583	19-10-1/2	6058	9-5-5/8	2886	10-5	3175	
85 to 89, 8T to 8Z	20-4	6198	21-10-1/2	6668	9-5-5/8	2886	10-5	3175	

NOTE(S):

a. Service access should be provided per American Society of Heating, Refrigerating, and Air-Conditioning Engineers (ASHRAE) 15, latest edition, National Fire Protection Association (NFPA) 70, and local safety code.
b. Allow at least 3 ft (915 mm) overhead clearance for service rigging for frame 2-3 compressor. Overhead clearance for service rigging and frame E compressor should be 5 ft (1524 mm).
c. Dimensions are approximate. Certified drawings available upon request.
d. Marine waterboxes may add 6 in. (152 mm) to the width of the machine. See certified drawings for details.
e. 'A' length dimensions shown are for standard 150 psig (1034 kPa) design and Victaulic connections. The 300 psig (2068 kPa) design and/or flanges will add length. See certified drawings.
f. 19XR,XRV heights can vary depending on the configuration. Check 19XR,XRV certified drawings for height information.
g. Not all waterbox/pass combinations are available with unit-mounted VFD (variable frequency drive). Check selection program for availability.
h. Assumes both evaporator and condenser nozzles on same end of chiller.
i. 1 or 3-pass length applies if evaporator is a 1 or 3-pass design.

Fig. 7 — 19XRV Dimensions

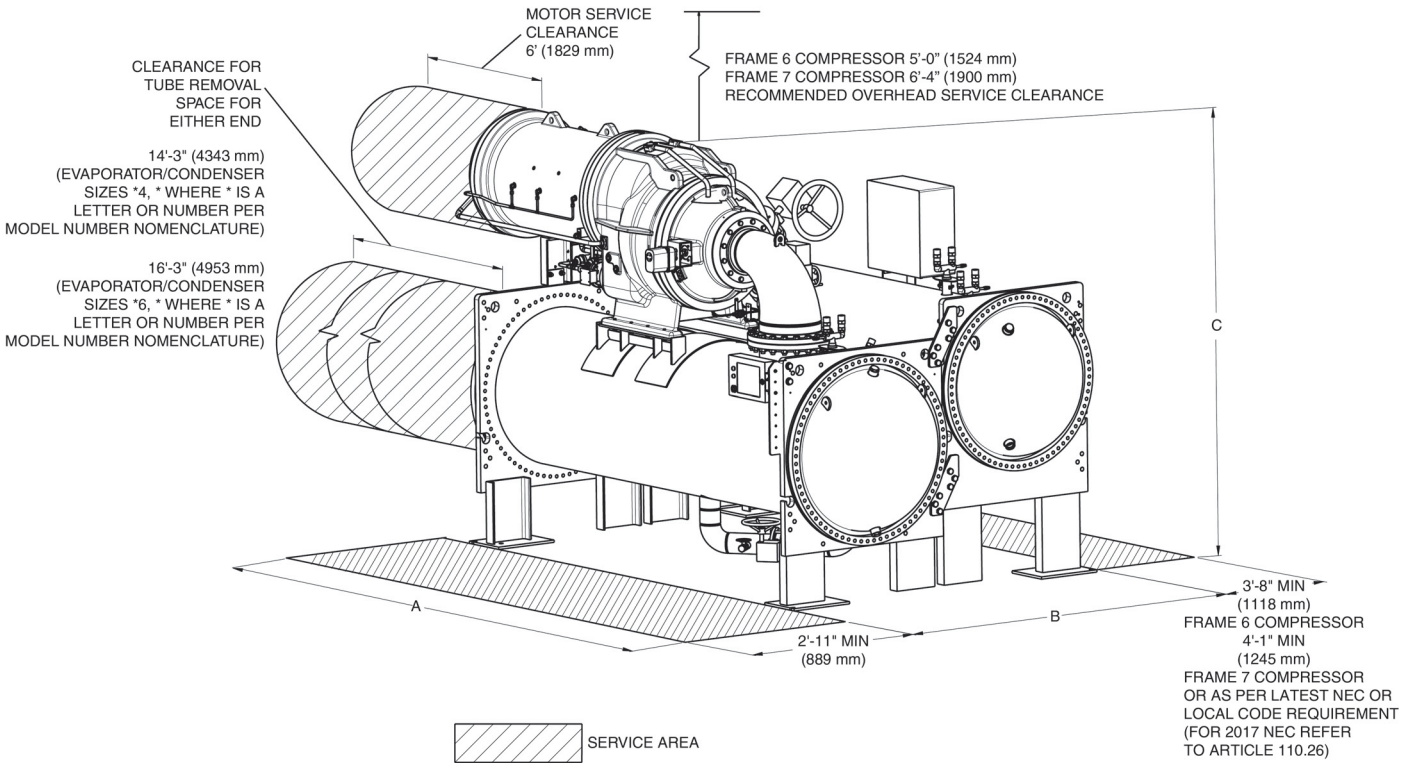

NOTE: Compressor Frame Size 6, dished head waterbox shown.

19XR Dimensions — Two-Stage Compressor Frame Sizes 6 and 7 (Dished Head Waterbox)[a,b,c,d,e,f]

EVAPORATOR HEAT EXCHANGER SIZE	CONDENSER HEAT EXCHANGER SIZE	A (LENGTH, DISHED HEAD WATERBOX)						19XR B WIDTH		19XR C HEIGHT
		1-Pass		2-Pass		3-Pass				
		ft-in.	mm	ft-in.	mm	ft-in.	mm	ft-in.	mm	
A4	**A4**	17- 8	5385	17- 6-3/4	5353	17- 6-3/4	5353	10- 3-1/8	3127	See Note f
A6	**A6**	19- 8	5994	19- 6-3/4	5962	19- 6-3/4	5962	10- 3-1/8	3127	
A4	**B4**	17- 8	5385	17- 7-3/8	5369	17- 7-3/8	5369	10- 8-1/2	3264	
A6	**B6**	19- 8	5994	19- 7-3/8	5978	19- 7-3/8	5978	10- 8-1/2	3264	
B6	**C6**	20- 0	6096	19- 11-1/8	6074	19- 9	6120	12- 0-5/8	3674	
B8	**C8**	22- 0	6096	21- 11-1/8	6684	21- 9	6629	12- 5-1/2	3797	
C6	**C6**	20- 4-1/4	6204	19- 11-1/8	6074	19- 11-3/4	6090	12- 5-1/2	3797	
C6	**D6**	20- 4-1/4	6204	20- 0	6096	20- 0-1/2	6109	13- 2	4013	
C8	**D8**	20- 0	6096	21- 11-1/8	6684	21- 9	6629	13- 2	4013	

NOTE(S):

a. Service access should be provided per American Society of Heating, Refrigerating, and Air-Conditioning Engineers (ASHRAE) 15, latest edition, National Fire Protectior Association (NFPA) 70, and local safety code.
b. Allow at least 5 ft (1524 mm) overhead clearance for service rigging.
c. Dimensions are approximate. Certified drawings available upon request.
d. 'A' length dimensions shown are for standard 150 psig (1034 kPa) design and flanged connections.
e. Table contains heat exchanger dimensions for largest type shown.
f. 19XR heights can vary depending on the configuration. Check 19XR certified drawings for height information.

Fig. 8 — 19XR Dimensions — Two-Stage Compressor Frame Sizes 6 and 7

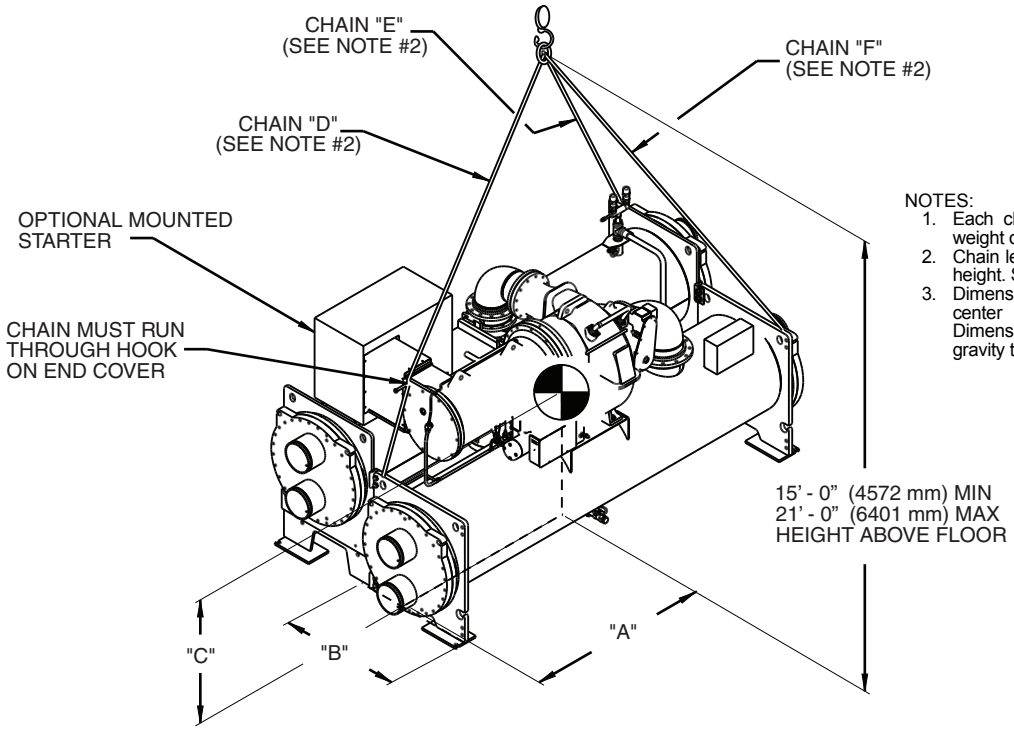

MACHINE RIGGING GUIDE

NOTES:
1. Each chain must be capable of supporting the entire weight of the machine. See chart for maximum weights.
2. Chain lengths shown are typical for 15′ (4572 mm) lifting height. Some minor adjustments may be required.
3. Dimensions "A" and "B" define distance from machine center of gravity to tube sheet outermost surfaces. Dimension "C" defines distance from machine center of gravity to floor.

COMP FRAME SIZE	HEAT EXCH SIZE	MAXIMUM MACHINE WEIGHT FREE-STANDING Unit-Mounted Starter		VESSEL LENGTH		DIM. "A"		DIM. "B"		DIM. "C"		CHAIN LENGTH					
												"D"		"E"		"F"	
		lb	kg	ft	mm	ft-in.	mm	ft-in.	mm	ft-in.	mm	ft-in.	mm	ft-in.	mm	ft-in.	mm
2	10-12	18,590	8432	10	3048	4-7	1397	2-6	762	2-3	686	12-7	3835	13-0	3962	13-0	3962
	15-17	19,140	8682	12	3658	5-9	1753	2-6	762	2-3	686	13-6	4115	13-2	4013	13-3	4039
	20-22	19,610	8895	10	3048	4-7	1397	2-4	711	3-1	940	12-7	3835	13-0	3962	13-0	3962
	30-32	21,210	9620	12	3658	5-9	1753	2-6	762	3-6	1067	13-6	4115	13-2	4013	13-3	4039
	35-37	22,720	10306	14	4267	7-4	2235	2-6	762	3-6	1067	14-2	4318	13-4	4064	13-4	4064
3	30-32	21,210	9620	12	3658	5-9	1753	2-6	762	3-6	1067	13-6	4115	13-2	4013	13-3	4039
	35-37	22,720	10306	14	4267	7-4	2235	2-6	762	3-6	1067	14-2	4318	13-4	4064	13-4	4064
	40-42	29,930	13576	12	3658	5-9	1753	2-7	787	3-2	965	12-8	3861	12-8	3861	13-4	4064
	45-47	32,040	14533	14	4267	6-10	2083	2-7	787	3-2	965	13-1	3988	13-2	4013	13-8	4166
	50-54	31,603	14335	12	3658	5-9	1753	2-7	787	3-2	965	12-7	3835	12-9	3886	13-5	4089
	5K-5R	31,603	14355	12	3658	5-9	1753	2-7	787	3-2	965	12-7	3835	12-9	3886	13-5	4089
	55-59	33,631	15255	14	4267	6-10	2083	2-7	787	3-2	965	13-1	3988	13-3	4039	13-9	4191
	5T-5Z	33,631	15255	14	4267	6-10	2083	2-7	787	3-2	965	13-1	3988	13-3	4039	13-9	4191
C	50-54	27,868	12641	12	3658	5 - 10	1778	2 - 8	813	3 -11	1194	12- 8	3861	12- 0	3658	12- 8	3861
	5A-5C	27,868	12641	12	3658	5 - 10	1778	2 - 8	813	3 -11	1194	12- 8	3861	12- 0	3658	12- 8	3861
	5K-5R	27,868	12641	12	3658	5 - 10	1778	2 - 8	813	3 -11	1194	12- 8	3861	12- 0	3658	12- 8	3861
	55-59	29,311	13295	14	4267	6 - 6	1981	2 -10	864	3 -11	1194	13- 1	3988	12- 8	3861	13- 2	4013
	5F-5H	29,311	13295	14	4267	6 - 6	1981	2 -10	864	3 -11	1194	13- 1	3988	12- 8	3861	13- 2	4013
	5T-5Z	29,311	13295	14	4267	6 - 6	1981	2 -10	864	3 -11	1194	13- 1	3988	12- 8	3861	13- 2	4013
	60-64	30,951	14039	12	3658	6 - 0	1829	3 - 0	914	4 - 6	1372	12- 3	3734	11- 4	3454	12- 0	3658
	6K-6R	30,951	14039	12	3658	6 - 0	1829	3 - 0	914	4 - 6	1372	12- 3	3734	11- 4	3454	12- 0	3658
	65-69	32,906	14926	14	4267	6 - 7	2007	3 - 1	940	4 - 6	1372	12- 8	3861	12- 0	3658	12- 8	3861
	6T-6Z	32,906	14926	14	4267	6 - 7	2007	3 - 1	940	4 - 6	1372	12- 8	3861	12- 0	3658	12- 8	3861
	70-74	44,023	19968	14	4267	6-11	2108	3-7	1092	4-4	1321	13-5	4089	12-0	1829	12-4	3759
	7K-7R	44,023	19968	14	4267	6-11	2108	3-7	1092	4-4	1321	13-5	4089	12-0	1829	12-4	3759
	75-79	46,612	21143	16	7801	7-8	2337	3-8	1118	4-4	1321	14-1	4293	12-8	2032	13-1	3988
	7T-7Z	46,612	21143	16	7801	7-8	2337	3-8	1118	4-4	1321	14-1	4293	12-8	2032	13-1	3988

Fig. 9 — Machine Rigging Guide (Heat Exchanger Size 10 Through 7Z) with Free-Standing or Unit-Mounted Starter

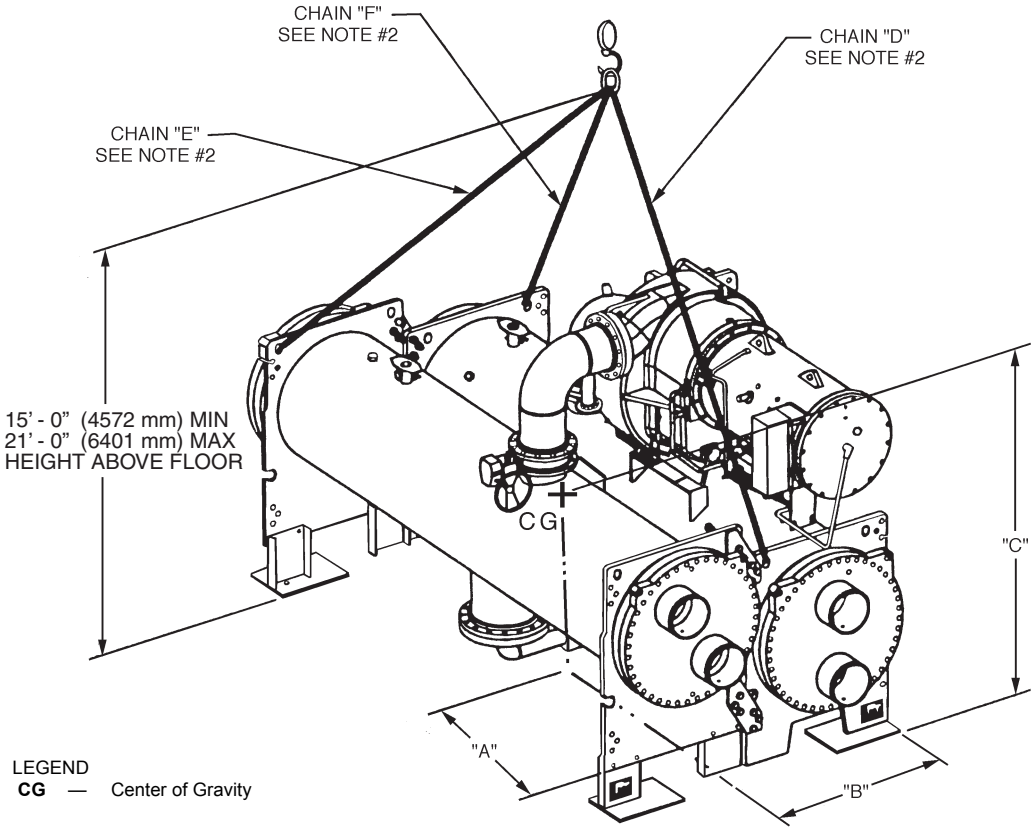

MACHINE RIGGING GUIDE

NOTES:
1. Each chain must be capable of supporting the entire weight of the machine. See chart for maximum weights.
2. Chain lengths shown are typical for 15′ (4572 mm) lifting height. Some minor adjustments may be required.
3. Dimensions "A" and "B" define distance from machine center of gravity to tube sheet outermost surfaces. Dimension "C" defines distance from machine center of gravity to floor.

COMP FRAME SIZE	HEAT EXCH SIZE	MAXIMUM MACHINE WEIGHT		VESSEL LENGTH		DIM. "A"		DIM. "B"		DIM. "C"		CHAIN LENGTH					
												"D"		"E"		"F"	
		lb	kg	ft	mm	ft-in.	mm	ft-in.	mm	ft-in.	mm	ft-in.	mm	ft-in.	mm	ft-in.	mm
E	70-74	46,906	21276	14	4267	6-4	1930	3-11	1194	4-6	1372	11-5	3480	12-3	3734	12-6	3810
	7K-7R	46,906	21276	14	4267	6-4	1930	3-11	1194	4-6	1372	11-5	3480	12-3	3734	12-6	3810
	75-79	50,693	22994	16	4877	7-5	2261	3-11	1194	4-6	1372	12-1	3683	12-9	3887	13-2	4013
	7T-7Z	50,693	22994	16	4877	7-5	2261	3-11	1194	4-6	1372	12-1	3683	12-9	3887	13-2	4013
	80-84	56,870	25796	14	4267	6-4	1930	3-11	1194	4-6	1372	11-5	3480	12-3	3734	12-6	3810
	8K-8R	56,870	25796	14	4267	6-4	1930	3-11	1194	4-6	1372	11-5	3480	12-3	3734	12-6	3810
	85-89	60,560	27470	16	4877	7-5	2261	3-11	1194	4-6	1372	12-1	3683	12-9	3887	13-2	4013
	8T-8Z	60,560	27470	16	4877	7-5	2261	3-11	1194	4-6	1372	12-1	3683	12-9	3887	13-2	4013

Fig. 10 — Machine Rigging Guide (Heat Exchanger Size 70 Through 8Z) with Free-Standing or Unit-Mounted Starter

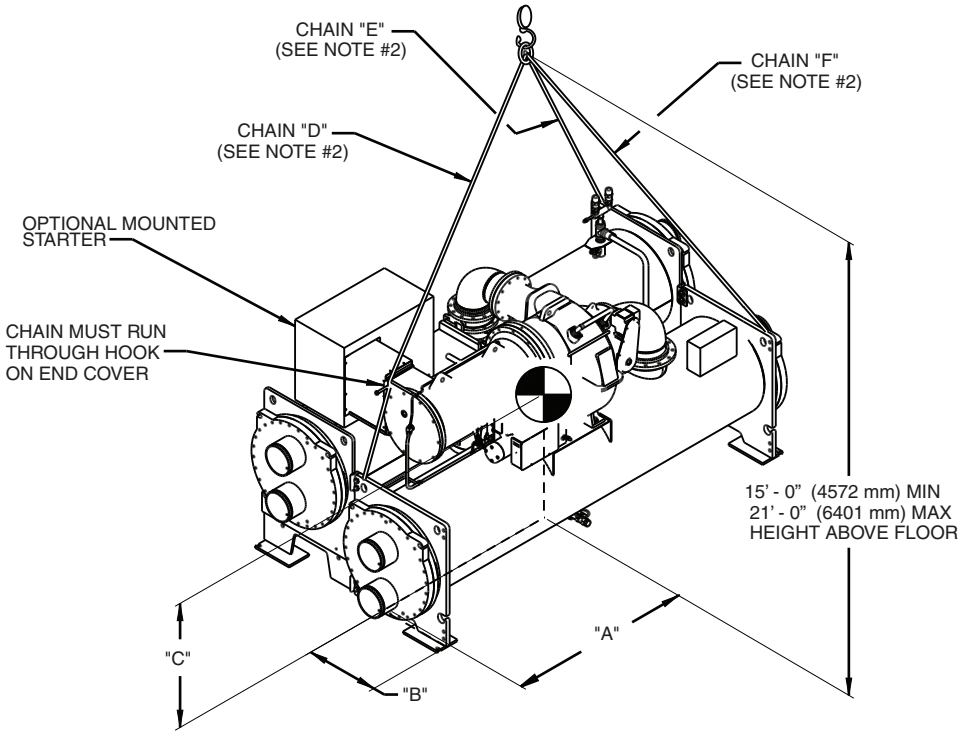

MACHINE RIGGING GUIDE

NOTES:
1. Each chain must be capable of supporting the entire weight of the machine. See chart for maximum weights.
2. Chain lengths shown are typical for 15′ (4572 mm) lifting height. Some minor adjustments may be required.
3. Dimensions "A" and "B" define distance from machine center of gravity to tube sheet outermost surfaces. Dimension "C" defines distance from machine center of gravity to floor.

COMP FRAME SIZE	HEAT EXCH SIZE	MAXIMUM MACHINE WEIGHT		VESSEL LENGTH		DIM. "A"		DIM. "B"		DIM. "C"		CHAIN LENGTH					
												"D"		"E"		"F"	
		lb	kg	ft	mm	ft-in.	mm	ft-in.	mm	ft-in.	mm	ft-in.	mm	ft-in.	mm	ft-in.	mm
2	20-22	22,910	10 392	10	3048	4- 7	1397	2-4	711	3-1	940	12-7	3835	13-0	3962	13- 0	3962
	30-32	24,510	11 118	12	3658	5- 9	1753	2-6	762	3-6	1067	13-6	4115	13-2	4013	13- 3	4039
	35-37	26,020	11 802	14	4267	7- 4	2235	2-6	762	3-6	1067	14-2	4318	13-4	4064	13- 4	4064
3	30-32	24,510	11 118	12	3658	5- 9	1753	2-6	762	3-6	1067	13-6	4115	13-2	4013	13- 3	4039
	35-37	26,020	11 802	14	4267	7- 4	2235	2-6	762	3-6	1067	14-2	4318	13-4	4064	13- 4	4064
	40-42	33,230	15 073	12	3658	5- 9	1753	2-7	787	3-2	965	12-8	3861	12-8	3861	13- 4	4064
	45-47	35,340	16 030	14	4267	6-10	2083	2-7	787	3-2	965	13-1	3988	13-2	4013	13- 8	4166
	50-54	34,103	15 481	12	3658	5- 9	1753	2-7	787	3-2	965	12-7	3835	12-9	3886	13- 5	4089
	5K-5R	34,103	15 481	12	3658	5- 9	1753	2-7	787	3-2	965	12-7	3835	12-9	3886	13- 5	4089
	55-59	36,131	16 389	14	4267	6-10	2083	2-7	787	3-2	965	13-1	3988	13-3	4039	13- 9	4191
	5T-5Z	36,131	16 389	14	4267	6-10	2083	2-7	787	3-2	965	13-1	3988	13-3	4039	13- 9	4191
C	50-54	30,868	14 001	12	3658	6- 0	1829	3-4	1016	4-2	1270	12-8	3861	11-9	3581	12- 8	3861
	5A-5C	30,868	14 001	12	3658	6- 0	1829	3-4	1016	4-2	1270	12-8	3861	11-9	3581	12- 8	3861
	5K-5R	30,868	14 001	12	3658	6- 0	1829	3-4	1016	4-2	1270	12-8	3861	11-9	3581	12- 8	3861
	55-59	32,311	14 656	14	4267	6- 7	2007	3-4	1016	4-2	1270	13-1	3988	12-6	3810	13- 4	4064
	5F-5H	32,311	14 656	14	4267	6- 7	2007	3-4	1016	4-2	1270	13-1	3988	12-6	3810	13- 4	4064
	5T-5Z	32,311	14 656	14	4267	6- 7	2007	3-4	1016	4-2	1270	13-1	3988	12-6	3810	13- 4	4064
	60-64	33,951	15 400	12	3658	6- 0	1829	3-6	1067	4-8	1422	12-4	3759	11-4	3454	12- 4	3759
	6K-6R	33,951	15 400	12	3658	6- 0	1829	3-6	1067	4-8	1422	12-4	3759	11-4	3454	12- 4	3759
	65-69	35,906	16 287	14	4267	6- 7	2007	3-6	1067	4-8	1422	12-8	3861	12-0	3759	12-10	3912
	6T-6Z	35,906	16 287	14	4267	6- 7	2007	3-6	1067	4-8	1422	12-8	3861	12-0	3759	12-10	3912

Fig. 11 — Machine Rigging Guide (Heat Exchanger Size 20 Through 6Z) with LF2 VFD (442 or 608A), Standard Tier VFD (230, 335, 445A or DD588, DE658, DE745, DE800 Drives), or 575-v VFD

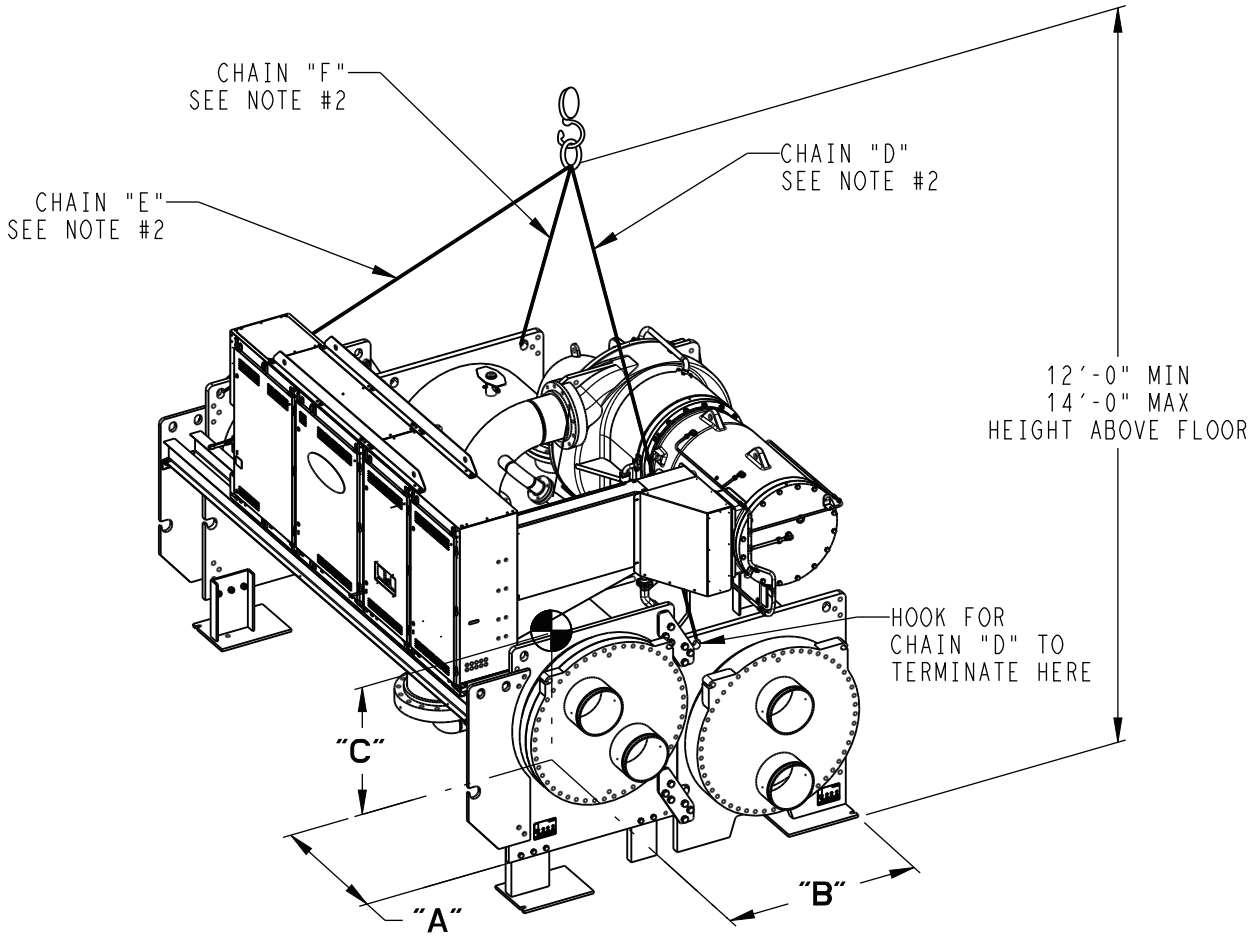

MACHINE RIGGING GUIDE

NOTES:
1. Each chain must be capable of supporting the entire weight of the machine. See chart for maximum weights.
2. Chain lengths shown are typical for 13′ (3962 mm) lifting height. Some minor adjustments may be required.
3. Dimensions “A” and “B” define distance from machine center of gravity to tube sheet outermost surfaces. Dimension “C” defines distance from machine center of gravity to floor.
4. Care must be taken to prevent damage to the machine while threading chain “D” between drive, conduit, and piping.

COMP. FRAME	MACHINE CODE	MAXIMUM WEIGHT		VESSEL LENGTH		DIM. “A”		DIM. “B”		DIM. “C”		CHAIN LENGTH					
												“D”		“E”		“F”	
		lb	kg	ft	mm	ft-in.	mm	ft-in.	mm	ft-in.	mm	ft-in.	mm	ft-in.	mm	ft-in.	mm
C	70-74, 7K-7R	47,023	21329	14	4267	6 - 10-1/2	2096	4	1219	4 - 7	1397	10 - 3	3124	10 - 4	3150	10 - 10	3302
	75-79, 7T-7Z	49,612	22504	16	4877	7 - 8	2337	4	1219	4 - 6-1/2	1384	10 - 9	3277	11 - 3	3429	11 - 9	3581
E	70-74, 7K-7R	55,926	25368	14	4267	6 - 2	1880	4 - 7	1397	4 - 11	1499	9 - 9	2972	10 - 9	3277	11 - 7	3531
	75-79, 7T-7Z	60,073	27249	16	4877	7 - 1	2159	4 - 7	1397	4 - 11	1499	10 - 4	3150	11 - 7	3531	12 - 4	3759
	80-84, 8K-8R	65,750	29824	14	4267	6 - 2	1880	4 - 7	1397	4 - 11	1499	9 - 9	2972	10 - 9	3277	11 - 7	3531
	85-89, 8T-8Z	69,835	31677	16	4877	7 - 1	2159	4 - 7	1397	4 - 11	1499	10 - 4	3150	11 - 7	3531	12 - 4	3759

Fig. 12 — Machine Rigging Guide (Compressor Frame C and E)

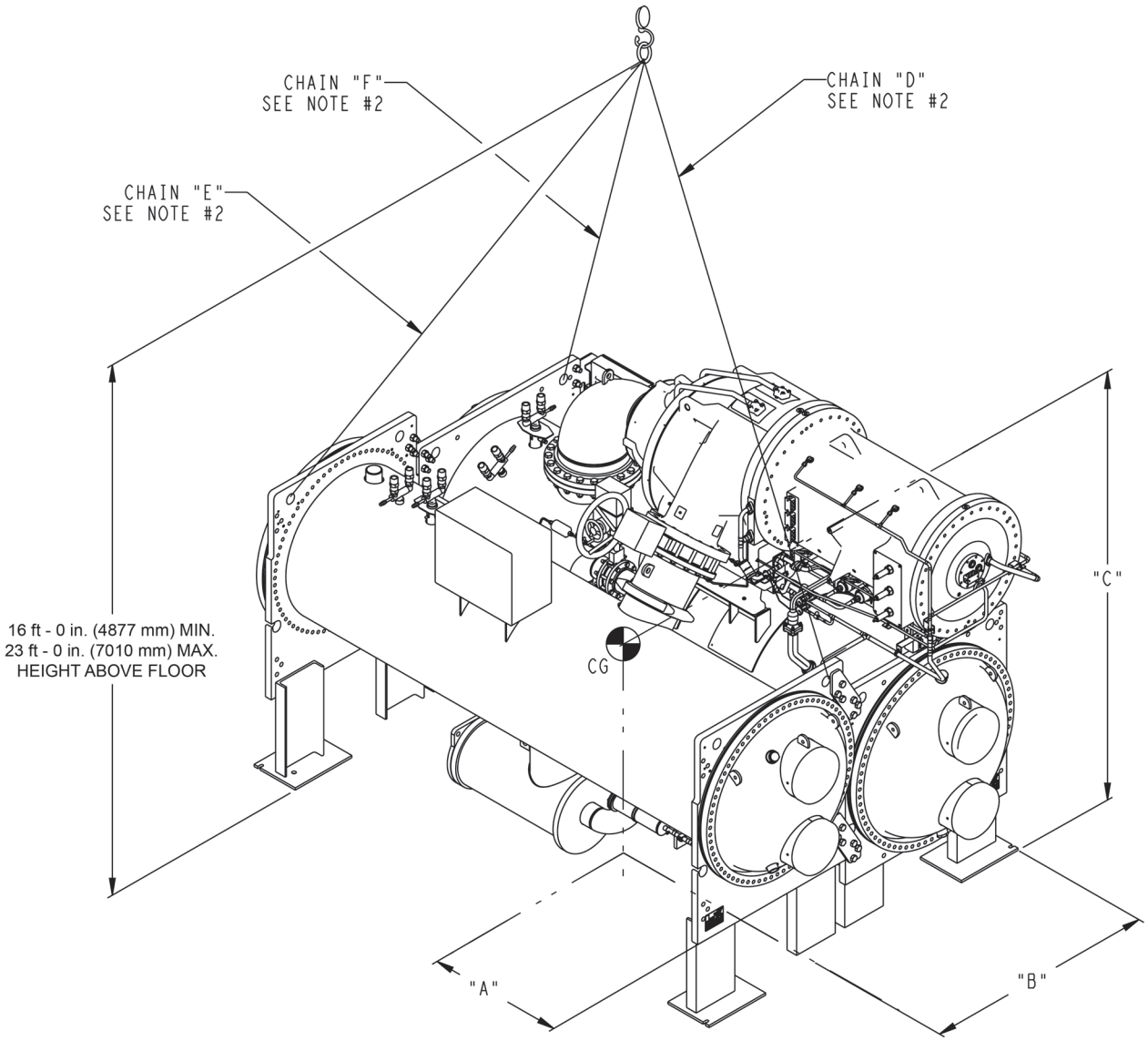

MACHINE RIGGING GUIDE

NOTES:
1. Each chain must be capable of supporting the entire weight of the machine. See chart for maximum weights.
2. Chain lengths shown are typical for 16′ (4877 mm) lifting height. Some minor adjustments may be required.
3. Dimensions “A” and “B” define distance from machine center of gravity to tube sheet outermost surfaces. Dimension “C” defines distance from machine center of gravity to floor.

LEGEND
MWB — Marine Waterbox
NIH — Nozzle in Head

HEAT EXCHANGER CODE (COOLER—CONDENSER)	COMPRESSOR FRAME	NIH MAX. WEIGHT lb [kg]	MWB MAX WEIGHT lb [kg]	VESSEL LENGTH ft [mm]	DIM. “A” in. [mm]	DIM. “B” in. [mm]	DIM. “C” in. [mm]	CHAIN LENGTH		
								“D” in. [mm]	“E” in. [mm]	“F” in. [mm]
A4—A4	6	65,094 [29526]	76,501 [34700]	14 [4267]	68.31 [1735]	53.98 [1371]	72.96 [1853]	136.50 [3467]	156.73 [3981]	161.42 [4100]
A4—B4	6	69,266 [31419]	80,673 [36593]	14 [4267]	69.09 [1755]	57.56 [1462]	71.26 [1810]	137.01 [3480]	157.28 [3995]	162.01 [4115]
A6—A6	6	68,282 [30972]	81,556 [36993]	16 [4877]	76.61 [1946]	54.69 [1389]	72.16 [1833]	140.83 [3577]	166.93 [4240]	171.77 [4363]
A6—B6	6	72,810 [33026]	86,084 [39047]	16 [4877]	77.87 [1978]	58.46 [1485]	70.39 [1788]	141.54 [3595]	166.97 [4241]	172.05 [4370]

Fig. 13 — Machine Rigging Guide (Compressor Frame Size 6)

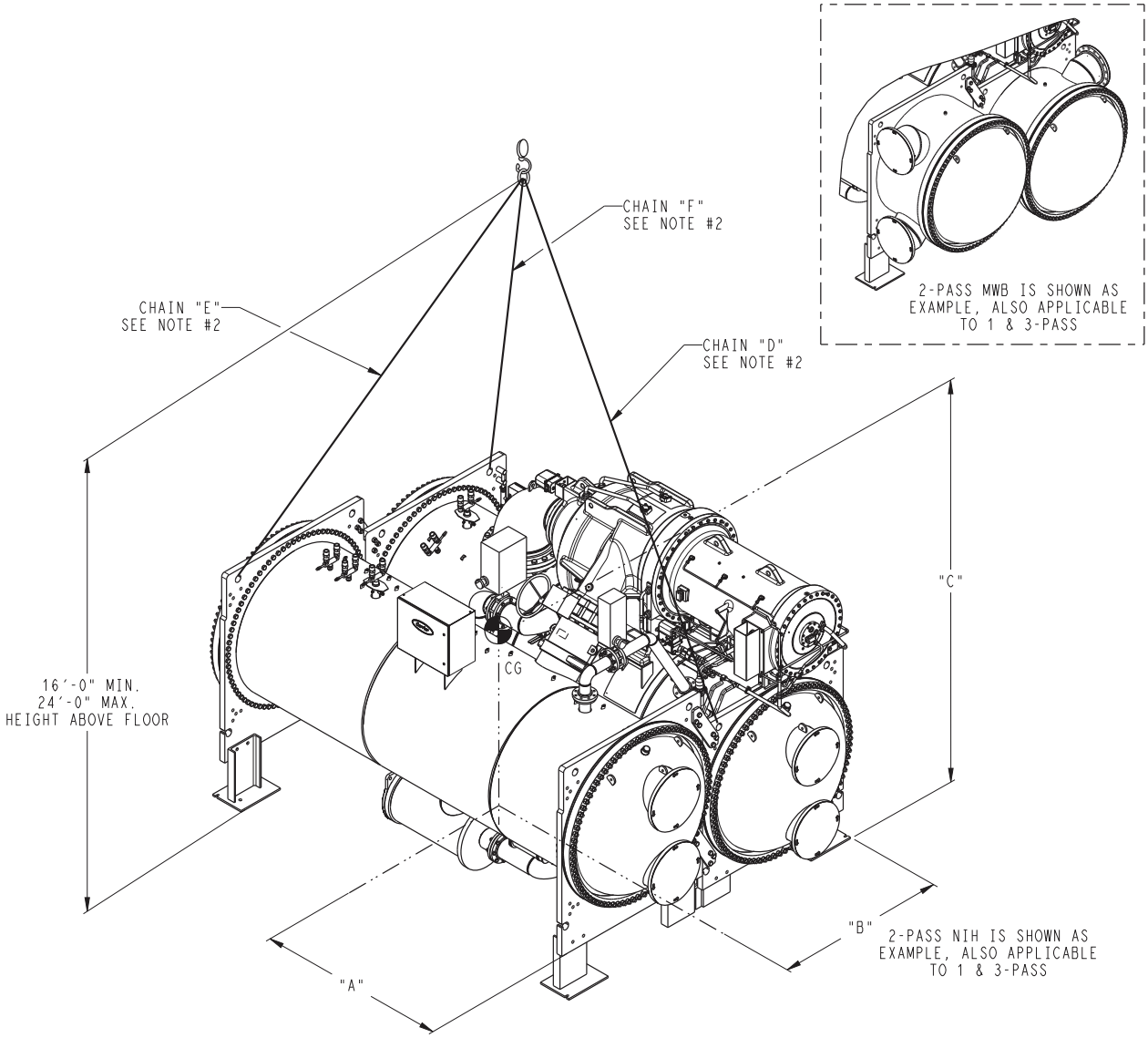

MACHINE RIGGING GUIDE

NOTES:
1. Each chain must be capable of supporting the entire weight of the machine. See chart for maximum weights.
2. Chain lengths shown are typical for 20′ (6096 mm) lifting height. Some minor adjustments may be required.
3. Dimensions “A” and “B” define distance from machine center of gravity to tube sheet outermost surfaces. Dimension “C” defines distance from machine center of gravity to floor.

LEGEND

MWB — Marine Waterbox
NIH — Nozzle in Head

HEAT EXCHANGER CODE (COOLER—CONDENSER)	COMPRESSOR FRAME	NIH Max. WEIGHT lb [kg]	MWB MAX. WEIGHT [kg]	VESSEL LENGTH ft [mm]	DIM. “A” in. [mm]	DIM. “B” in. [mm]	DIM. “C” in. [mm]	CHAIN LENGTH		
								“D” in. [mm]	“E” in. [mm]	“F” in. [mm]
B6—C6	7	94,574 [42,898]	112,911 [51,216]	16 [4877]	73.98 [1879]	64.65 [1642]	76.81 [1951]	167.01 [4242]	188.70 [4793]	198.23 [5035]
B8—C8	7	98,876 [44,849]	117,213 [53,167]	18 [5486]	83.23 [2114]	64.65 [1642]	76.81 [1951]	171.55 [4357]	197.90 [5027]	206.85 [5254]
C6—C6	7	101,110 [45,863]	121,448 [55,088]	16 [4877]	79.33 [2015]	66.69 [1694]	75.28 [1912]	166.57 [4231]	186.81 [4745]	193.62 [4918]
C6—D6	7	109,798 [49,803]	133,108 [60,377]	16 [4877]	82.32 [2091]	73.43 [1865]	73.66 [1871]	168.03 [4268]	185.63 [4715]	194.02 [4928]
C8—D8	7	121,971 [55,325]	146,897 [66,631]	18 [5486]	89.31 [2268]	73.43 [1865]	73.66 [1871]	171.76 [4363]	195.77 [4973]	203.72 [5174]

Fig. 14 — Machine Rigging Guide (Compressor Frame Size 7)

Table 1 — 19XR Nozzle Size

HEAT EXCHANGER FRAME SIZE	NOZZLE SIZE (in.) (Nominal Pipe Size)					
	Cooler			Condenser		
	1-Pass	2-Pass	3-Pass	1-Pass	2-Pass	3-Pass
2	10	8	6	10	8	6
3	10	8	6	10	8	6
4	10	8	6	10	8	6
5	10	8	6	10	10	8
6	10	10	8	10	10	8
7	14	12	10	14	12	12
8	14	14	12	14	14	12
A	20	16	12	20	16	14
B	20	18	14	20	18	14
C	20	18	14	24	20	16
D	—	—	—	24	20	16

Table 2 — 19XRV Dimensions (Marine Waterbox)[a,b,c,d,e,f,g,h]

HEAT EXCHANGER SIZE	A (Length, Marine Waterbox)						B WIDTH		C HEIGHT
	1-Pass		2-Pass[i]		3-Pass				
	ft-in.	mm	ft-in.	mm	ft-in.	mm	ft-in.	mm	
20 to 22	14- 1-1/4	4299	12- 5-1/2	3797	14- 1-1/4	4299	6- 1-1/16	1856	See Note g
30 to 32	16- 4-3/4	4997	14- 9	4496	16- 4-3/4	4997	6- 1-1/16	1856	
35 to 37	18- 1-1/4	5518	16- 5-1/2	5017	18- 1-1/4	5518	6- 1-1/16	1856	
40 to 42	16- 8-1/4	5086	15- 2-3/4	4642	16- 8-1/4	5086	6- 3-1/4	1911	
45 to 47	18- 4-3/4	5607	16-11-1/4	5163	18- 4-3/4	5607	6- 3-1/4	1911	
50 to 54, 5K to 5R	16- 8-1/2	5093	15- 3-1/2	4661	16- 8-1/2	5093	6- 8-7/8	2054	
5A to 5C	16- 8-1/2	5093	15- 3-1/2	4661	16- 8-1/2	5093	6- 8-7/8	2054	
55 to 59, 5T to 5Z	18- 5	5613	17- 0	5182	18- 5	5613	6- 8-7/8	2054	
5F to 5H	18- 5	5613	17- 0	5182	18- 5	5613	6- 8-7/8	2054	
60 to 64, 6K to 6R	16- 8-3/4	5099	15- 4-1/8	4677	16- 8-3/4	5099	6-11-3/4	2127	
65 to 69, 6T to 6Z	18- 5-1/4	5620	17- 0-5/8	5197	18- 5-1/4	5620	6-11-3/4	2127	
70 to 74, 7K to 7R	19- 9-3/4	6039	18- 3-5/8	5579	19- 9-3/4	6039	9- 6-3/8	2905	
75 to 79, 7T to 7Z	21- 9-3/4	6649	20- 3-5/8	6188	21- 9-3/4	6649	9- 6-3/8	2905	
80 to 84, 8K to 8R	19-10-1/2	6058	18- 4	5583	19-10-1/2	6058	10- 5	3175	
85 to 87, 8T to 8Z	21-10-1/2	6668	20- 4	6198	21-10-1/2	6668	10- 5	3175	
A4	23- 1-3/4	7055	21- 8-1/2	6617	20-11	6375	10- 6-3/8	3210	See Note e
A6	25- 1-3/4	7665	23- 8-1/2	7226	22-11	6985	10- 6-3/8	3210	
A4	23- 1-3/4	7055	22- 1-3/4	6750	21- 1-3/4	6446	11- 0-1/8	3356	
A6	25- 1-3/4	7665	24- 1-3/4	7360	23- 1-3/4	7055	11- 0-1/8	3356	
B6	26- 6-3/4	8097	25- 2-1/2	7680	24- 2-3/4	7385	12- 3-7/8	3756	
B8	28- 6-3/4	8706	27- 2-1/2	8293	26- 2-3/4	7994	12- 10-3/8	3921	
C6	26- 6-3/4	8097	25- 4-7/8	7744	24- 2-3/4	8097	12- 3-7/8	3756	
C6	26-11	8204	25- 7-1/8	7801	24- 7	7493	13- 6-5/8	4131	

NOTE(S):

a. Service access should be provided per ASHRAE 15, latest edition, NFPA 70, and local safety code.
b. Allow at least 3 ft (915 mm) overhead clearance for service rigging for frame 2-3 compressor. Overhead clearance for service rigging frame 6 compressor should be 5 ft (1524 mm). Overhead clearance for service rigging frame 7 compressor should be 6 ft 4 in. (1930 mm).
c. Dimensions are approximate. Certified drawings available upon request.
d. Marine waterboxes may add 6 in. to the width of the machine. See certified drawings for details.
e. 19XR height can vary depending on the configuration. Check 19XR certified drawings for height information.
f. “A” length dimensions shown are for standard 150-psig design and Victaulic connections. The 300-psig design and/or flanges will add length. See certified drawings.
g. The 19XRV height can vary depending on the configuration. Check 19XRV certified drawings for height information.
h. 1 or 3-pass length applies if cooler is a 1 or 3-pass design.
i. Assumes both cooler and condenser nozzles on same end of chiller.

Table 3 — 19XR Component Weights, Frame 2,3,C,E[a,b,c]

COMPONENT	FRAME 2 COMPRESSOR		FRAME 3 COMPRESSOR		FRAME C COMPRESSOR		FRAME E COMPRESSOR	
	lb	kg	lb	kg	lb	kg	lb	kg
Suction Elbow	116	53	185	84	303	137	337	171
Discharge Elbow	100	45	125	57	245	111	427	194
Control Panel[d]	92	72	92	72	92	42	92	42
Optional Cooler Inlet Isolation Valve	8	4	13	6	24	11	24	11
Optional Discharge Isolation Valve	26	12	46	21	93	42	93	42
Std Tier VFD — 380, 400, and 460-v (230, 335, 445 A)	650	295	650	295	650	295	—	—
Std Tier VFD — 380, 400, and 460-v (DD588)	—	—	275	125	275	125	—	—
Std Tier VFD — 380, 400, and 460-v (DE658, DE745, DE800)	—	—	650	295	650	295	—	—
Std Tier VFD — 380, 400, and 460-v (DE800, DE990)	—	—	—	—	700	318	700	318
Std Tier VFD — 380, 400, and 460-v (DP1120, DP1260, DP1460)	—	—	—	—	3000	1361	3000	1361
Std Tier VFD — 380, 400, and 460-v (DP1670)	—	—	—	—	—	—	3400	1542
LiquiFlo™[e] 2 VFD — 380, 400, and 460-v (442 A)	1600	726	1600	726	—	—	—	—
LiquiFlo 2 VFD — 380, 400, and 460-v (608 A)	—	—	1600	726	—	—	—	—
LiquiFlo 2 VFD — 380, 400, and 460-v (900 A)	—	—	—	—	2800	1270	2800	1270
LiquiFlo 2 VFD — 380, 400, and 460-v (1200 A)	—	—	—	—	2850	1293	2850	1293
LiquiFlo 2 VFD — 575-v (390 A)	2200	998	2200	998	—	—	—	—
VFD Shelf (ROCKWELL VFD)	—	—	—	—	1049	476	1049	476
VFD Shelf (Danfoss VFD)	—	—	—	—	1395	633	1499	680

NOTE(S):

a. VFD sizes are available on select heat exchanger models; consult the 19XR,XRV Computer Selection program.
b. VFD Power Panel (DD558, DE658, DE745, DE800, DE880, DE990) used on frames 3, C, E = 300 lb (136 kg).
c. To determine compressor frame size, refer to 19XR,XRV Computer Selection Program.
d. Included in total cooler weight.
e. Third-party trademarks and logos are the property of their respective owners.

Table 4 — 19XR Component Weights, Frame 6,7[a]

COMPONENT	FRAME 6 COMPRESSOR		FRAME 7 COMPRESSOR	
	lb	kg	lb	kg
Suction Pipe Assembly (Includes Flanges)	486	220	613	278
Optional Cooler Inlet Isolation Valve	26	12	28	13
Optional Discharge Isolation Valve	277	91	324	147
HMI Panel	25	11	25	11
Control Panel	190	86	190	86
Economizer Cover	132	60	182	83
High Side Float Chamber Cover	132	60	182	83

NOTE(S):

a. Variable frequency drive (VFD) sizes are available on select heat exchanger models; consult the 19XR,XRV Computer Selection program.

Table 5 — 19XR,XRV Compressor and Motor Weights[a] — High-Efficiency Motors, Compressor Frame Size 2[b]

MOTOR CODE	ENGLISH (lb)						SI (kg)					
	Compressor Weight[c]	60 Hz		50 Hz		End Bell Cover Weight	Compressor Weight[c]	60 Hz		50 Hz		End Bell Cover Weight
		Stator Weight[d]	Rotor Weight	Stator Weight[d]	Rotor Weight			Stator Weight[d]	Rotor Weight	Stator Weight[d]	Rotor Weight	
HIGH-EFFICIENCY MOTORS / LOW VOLTAGE (200-575 v)												
JCH	2300	1063	248	1113	263	185	1043	482	112	505	119	84
JDH	2300	1113	263	1149	278	185	1043	505	119	521	126	84
JEH	2300	1149	278	1196	295	185	1043	521	126	542	134	84
JFH	2300	1196	295	—	—	185	1043	542	134	—	—	84

NOTE(S):

a. Total compressor weight is the sum of the compressor aerodynamic components (compressor weight column), stator, rotor, and end bell cover weights.
b. See Model Number Nomenclature.
c. Compressor aerodynamic component weight only, motor weight not included. Applicable to standard compressors only. For high lift compressors, contact Carrier Chiller Marketing for weights.
d. Stator weight includes the stator and shell.

Table 6 — 19XR,XRV Compressor and Motor Weights[a] — High-Efficiency Motors, Compressor Frame Size 3[b]

MOTOR CODE	ENGLISH (lb)						SI (kg)					
	Compressor Weight[c]	60 Hz		50 Hz		End Bell Cover Weight	Compressor Weight[c]	60 Hz		50 Hz		End Bell Cover Weight
		Stator Weight[d]	Rotor Weight	Stator Weight[d]	Rotor Weight			Stator Weight[d]	Rotor Weight	Stator Weight[d]	Rotor Weight	
HIGH-EFFICIENCY MOTORS / LOW VOLTAGE (200-575 v)												
KCH	2816	1353	285	1381	291	274	1277	614	129	626	132	124
KEH	2816	1417	307	1441	313	274	1277	643	139	654	142	124
KGH	2816	1470	320	1505	333	274	1277	667	145	683	151	124
KHH	2816	1505	333	—	—	274	1277	683	151	—	—	124
UC	2816	1391	330	1419	344	274	1277	631	150	644	156	124
UE	2816	1455	372	1479	386	274	1277	660	169	671	175	124
UG	2816	1508	400	1543	421	274	1277	684	181	700	191	124
UH	2816	1543	421	—	—	274	1277	700	191	—	—	124

NOTE(S):

a. Total compressor weight is the sum of the compressor aerodynamic components (compressor weight column), stator, rotor, and end bell cover weights.
b. See Model Number Nomenclature.
c. Compressor aerodynamic component weight only, motor weight not included. Applicable to standard compressors only. For high lift compressors, contact Carrier Chiller Marketing for weights.
d. Stator weight includes the stator and shell.

Table 7 — 19XR,XRV Compressor and Motor Weights[a] — High-Efficiency Motors, Compressor Frame Size C[b]

MOTOR CODE	ENGLISH (lb)						SI (kg)					
	Compressor Weight[c]	60 Hz		50 Hz		End Bell Cover Weight	Compressor Weight[c]	60 Hz		50 Hz		End Bell Cover Weight
		Stator Weight[d]	Rotor Weight	Stator Weight[d]	Rotor Weight			Stator Weight[d]	Rotor Weight	Stator Weight[d]	Rotor Weight	
HIGH EFFICIENCY MOTORS / LOW VOLTAGE (230 - 575 V)												
VC	3265	1936	474	2008	494	317	1481	878	215	911	224	144
VE	3265	2057	518	2092	534	317	1481	933	235	949	242	144
VH	3265	2200	591	2200	591	317	1481	998	268	998	268	144
HIGH EFFICIENCY MOTORS / LOW VOLTAGE (400 V)												
VC	3678	2008	494	—	—	317	1668	911	224	—	—	144
VE	3678	2092	534	—	—	317	1668	949	242	—	—	144
VH	3678	2200	591	—	—	317	1668	998	268	—	—	144
HIGH EFFICIENCY MOTORS / LOW VOLTAGE (380/3/60 or 460/3/60 or 575/3/60 V)												
VC	3678	1936	474	—	—	317	1668	878	215	—	—	144
VE	3678	2057	518	—	—	317	1668	933	235	—	—	144
VH	3678	2200	591	—	—	317	1668	998	268	—	—	144
HIGH EFFICIENCY MOTORS / MEDIUM VOLTAGE (2400-6900 V)												
DD	3265	2025	429	2025	429	338	1481	919	195	919	195	153
DH	3265	2250	480	2380	522	338	1481	1021	218	1080	237	153
HIGH EFFICIENCY MOTORS / HIGH VOLTAGE (10000 V)												
LF	3265	—	—	2665	646	413	1481	—	—	1209	293	187
LH	3265	—	—	2760	666	413	1481	—	—	1252	302	187
HIGH EFFICIENCY MOTORS / HIGH VOLTAGE (11000 V)												
LF	3265	—	—	2659	646	413	1481	—	—	1209	293	187
LH	3265	—	—	2754	666	413	1481	—	—	1249	302	187

NOTE(S):

a. Total compressor weight is the sum of the compressor aerodynamic components (compressor weight column), stator, rotor, and end bell cover weights.
b. See Model Number Nomenclature.
c. Compressor aerodynamic component weight only, motor weight not included. Applicable to standard compressors only.
d. Stator weight includes the stator and shell.

Table 8 — 19XR,XRV Compressor and Motor Weights[a] — High-Efficiency Motors, Compressor Frame Size E[b]

MOTOR CODE	ENGLISH (lb)						SI (kg)					
	Compressor Weight[c]	60 Hz		50 Hz		End Bell Cover Weight	Compressor Weight[c]	60 Hz		50 Hz		End Bell Cover Weight
		Stator Weight[d]	Rotor Weight	Stator Weight[d]	Rotor Weight			Stator Weight[d]	Rotor Weight	Stator Weight[d]	Rotor Weight	
HIGH-EFFICIENCY MOTORS / LOW VOLTAGE (400-460 v)												
MCH	4853	2873	672	2925	693	414	2201	1303	305	1327	314	188
MEH	4853	2956	704	3071	737	414	2201	1341	319	1392	334	188
MFH	4853	3034	724	3153	791	414	2201	1376	328	1430	359	188
MGH	4853	3071	737	—	—	414	2201	1393	334	—	—	188
HIGH-EFFICIENCY MOTORS / MEDIUM VOLTAGE (2400-4160 v)												
MBH	4853	2890	670	2970	696	414	2201	1311	304	1347	316	188
MDH	4853	2970	696	3170	749	414	2201	1347	316	1438	340	188
MFH	4853	3170	749	3460	830	414	2201	1438	340	1569	376	188
MGH	4853	3270	791	—	—	414	2201	1483	359	—	—	188
HIGH-EFFICIENCY MOTORS / MEDIUM VOLTAGE (6300-6900 v)												
MBH	4853	2970	696	3120	736	414	2201	1347	316	1415	334	188
MDH	4853	3170	749	3170	749	414	2201	1438	340	1438	340	188
MFH	4853	3170	749	3460	830	414	2201	1438	340	1569	376	188
MGH	4853	3410	817	—	—	414	2201	1547	371	—	—	188
HIGH-EFFICIENCY MOTORS / HIGH VOLTAGE (10000-11000 v)												
MDH	4853	—	—	3956	678	414	2201	—	—	1794	308	188
MFH	4853	—	—	4062	719	414	2201	—	—	1842	326	188
MHH	4853	3820	657	—	—	414	2201	1733	298	—	—	188
HIGH-EFFICIENCY MOTORS / HIGH VOLTAGE (13800 v)												
MHH	4853	3779	646	—	—	414	2201	1714	293	—	—	188

NOTE(S):

a. Total compressor weight is the sum of the compressor aerodynamic components (compressor weight column), stator, rotor, and end bell cover weights.
b. See Model Number Nomenclature.
c. Compressor aerodynamic component weight only, motor weight not included. Applicable to standard compressors only. For high lift compressors, contact Carrier Chiller Marketing for weights.
d. Stator weight includes the stator and shell.

Table 9 — 19XR Compressor and Motor Weights[a] — High-Efficiency Motors Two-Stage Compressor Frame Size 6, 60 Hz[b]

MOTOR CODE	ENGLISH (lb)				SI (kg)			
	Compressor Weight[c]	Stator and Housing Weight	Rotor and Shaft Weight	End Bell Cover Weight	Compressor Weight[c]	Stator and Housing Weight	Rotor and Shaft Weight	End Bell Cover Weight
Voltage: 380-3-60								
N	10,287	1153	5928	1021	4666	2689	523	463
P	10,287	1153	5928	1021	4666	2689	523	463
Q	10,287	1179	6107	1021	4666	2770	535	463
R	10,287	1153	6109	1021	4666	2771	523	463
S	10,287	1153	6144	1021	4666	2787	523	463
T	10,287	1179	6151	1021	4666	2790	535	463
Voltage: 460-3-60								
N	10,287	1153	5946	1021	4666	2697	523	463
P	10,287	1153	5948	1021	4666	2698	523	463
Q	10,287	1179	6107	1021	4666	2770	535	463
R	10,287	1179	6111	1021	4666	2772	535	463
S	10,287	1188	6149	1021	4666	2789	539	463
T	10,287	1188	6153	1021	4666	2791	539	463
Voltage: 2400-3-60								
N	10,287	5929	1212	1021	4666	2689	550	463
P	10,287	6021	1230	1021	4666	2731	558	463
Q	10,287	6112	1248	1021	4666	2772	566	463
R	10,287	6190	1264	1021	4666	2808	573	463
S	10,287	6268	1280	1021	4666	2843	581	463
T	10,287	6259	1280	1021	4666	2839	581	463
Voltage: 3300-3-60								
N	10,287	5927	1212	1021	4666	2688	550	463
P	10,287	6019	1230	1021	4666	2730	558	463
Q	10,287	6110	1248	1021	4666	2771	566	463
R	10,287	6187	1264	1021	4666	2806	573	463
S	10,287	6263	1280	1021	4666	2841	581	463
T	10,287	6277	1280	1021	4666	2847	581	463
Voltage: 4160-3-60								
N	10,287	6103	1247	1021	4666	2768	566	463
P	10,287	6103	1248	1021	4666	2768	566	463
Q	10,287	6103	1248	1021	4666	2768	566	463
R	10,287	6185	1264	1021	4666	2805	573	463
S	10,287	6268	1280	1021	4666	2843	581	463
T	10,287	6268	1280	1021	4666	2843	581	463
Voltage: 6900-3-60								
N	10,287	6558	1316	1021	4666	2975	600	463
P	10,287	6559	1316	1021	4666	2975	600	463
Q	10,287	6559	1316	1021	4666	2975	600	463
R	10,287	6566	1316	1021	4666	2978	600	463
S	10,287	6574	1316	1021	4666	2982	600	463
T	10,287	6604	1351	1021	4666	2996	613	463

Table 9 — 19XR Compressor and Motor Weights[a] — High-Efficiency Motors Two-Stage Compressor Frame Size 6, 60 Hz[b] (cont)

MOTOR CODE	ENGLISH (lb)				SI (kg)			
	Compressor Weight[c]	Stator and Housing Weight	Rotor and Shaft Weight	End Bell Cover Weight	Compressor Weight[c]	Stator and Housing Weight	Rotor and Shaft Weight	End Bell Cover Weight
Voltage: 11000-3-60								
N	10,287	6587	1351	1021	4666	2988	613	463
P	10,287	6587	1351	1021	4666	2988	613	463
Q	10,287	6587	1351	1021	4666	2988	613	463
R	10,287	6716	1385	1021	4666	3036	628	463
S	10,287	6844	1419	1021	4666	3104	644	463
T	10,287	6844	1419	1021	4666	3104	644	463
Voltage: 13800-3-60								
N	10,287	6554	1351	1021	4666	2973	613	463
P	10,287	6554	1351	1021	4666	2973	613	463
Q	10,287	6554	1351	1021	4666	2973	613	463
R	10,287	6709	1385	1021	4666	3043	628	463
S	10,287	6864	1419	1021	4666	3113	644	463
T	10,287	6864	1419	1021	4666	3113	644	463

NOTE(S):

a. Total compressor weight is the sum of the compressor aerodynamic components (compressor weight column), stator, rotor, and end bell cover weights.
b. See Model Number Nomenclature.
c. Compressor aerodynamic component weight only, motor weight not included. Applicable to standard compressors only. For high lift compressors, contact Carrier Chiller Marketing for weights.

Table 10 — 19XR Compressor and Motor Weights[a] — High-Efficiency Motors Two-Stage Compressor Frame Size 6, 50 Hz[b]

MOTOR CODE	ENGLISH (lb)				SI (kg)			
	Compressor Weight[c]	Stator and Housing Weight	Rotor and Shaft Weight	End Bell Cover Weight	Compressor Weight[c]	Stator and Housing Weight	Rotor and Shaft Weight	End Bell Cover Weight
Voltage: 400-3-50								
N	10,287	1153	5917	1021	4666	2684	523	463
P	10,287	1153	5919	1021	4666	2685	523	463
Q	10,287	1179	6105	1021	4666	2769	535	463
R	10,287	1179	6107	1021	4666	2770	535	463
S	10,287	1188	6149	1021	4666	2789	539	463
T	10,287	1188	6151	1021	4666	2790	539	463
Voltage: 3000-3-50								
N	10,287	5918	1212	1021	4666	2684	550	463
P	10,287	6006	1230	1021	4666	2724	558	463
Q	10,287	6094	1248	1021	4666	2764	566	463
R	10,287	6184	1264	1021	4666	2805	573	463
S	10,287	6274	1280	1021	4666	2846	581	463
T	10,287	6296	1280	1021	4666	2856	581	463
Voltage: 3300-3-50								
N	10,287	5913	1212	1021	4666	2682	550	463
P	10,287	6007	1230	1021	4666	2725	558	463
Q	10,287	6101	1248	1021	4666	2767	566	463
R	10,287	6192	1264	1021	4666	2809	573	463
S	10,287	6283	1280	1021	4666	2850	581	463
T	10,287	6266	1280	1021	4666	2842	581	463
Voltage: 6300-3-50								
N	10,287	6277	1280	1021	4666	2847	581	463
P	10,287	6333	1298	1021	4666	2873	589	463
Q	10,287	6389	1316	1021	4666	2898	600	463
R	10,287	6473	1316	1021	4666	2936	600	463
S	10,287	6556	1316	1021	4666	2974	600	463
T	10,287	6609	1351	1021	4666	2998	613	463
Voltage: 10000-3-50								
N	10,287	6281	1280	1021	4666	2849	581	463
P	10,287	6281	1281	1021	4666	2849	581	463
Q	10,287	6281	1281	1021	4666	2849	581	463
R	10,287	6441	1316	1021	4666	2922	600	463
S	10,287	6600	1351	1021	4666	2994	613	463
T	10,287	6156	1351	1021	4666	2792	613	463
Voltage: 11000-3-50								
N	10,287	6600	1351	1021	4666	2994	613	463
P	10,287	6600	1351	1021	4666	2994	613	463
Q	10,287	6600	1351	1021	4666	2994	613	463
R	10,287	6765	1385	1021	4666	3069	628	463
S	10,287	6930	1419	1021	4666	3143	644	463
T	10,287	6930	1419	1021	4666	3143	644	463

NOTE(S):

a. Total compressor weight is the sum of the compressor aerodynamic components (compressor weight column), stator, rotor, and end bell cover weights.
b. See Model Number Nomenclature.
c. Compressor aerodynamic component weight only, motor weight not included. Applicable to standard compressors only. For high lift compressors, contact Carrier Chiller Marketing for weights.

Table 11 — 19XR Compressor and Motor Weights[a] — High-Efficiency Motors Two-Stage Compressor Frame Size 7, 60 Hz[b]

MOTOR CODE	ENGLISH (lb)				SI (kg)			
	Compressor Weight[c]	Stator and Housing Weight	Rotor and Shaft Weight	End Bell Cover Weight	Compressor Weight[c]	Stator and Housing Weight	Rotor and Shaft Weight	End Bell Cover Weight
Voltage: 2400-3-60								
U	16,024	6719	1443	983	7268	3048	654	446
V	16,024	6718	1443	983	7268	3047	654	446
W	16,024	6717	1443	983	7268	3047	654	446
X	16,024	6811	1460	983	7268	3089	662	446
Y	16,024	6906	1476	983	7268	3132	670	446
Z	16,024	7073	1509	983	7268	3208	684	446
Voltage: 3300-3-60								
U	16,024	6723	1443	983	7268	3049	654	446
V	16,024	6730	1443	983	7268	3053	654	446
W	16,024	6736	1443	983	7268	3055	654	446
X	16,024	6816	1460	983	7268	3092	662	446
Y	16,024	6895	1476	983	7268	3128	670	446
Z	16,024	7055	1509	983	7268	3200	684	446
Voltage: 4160-3-60								
U	16,024	6739	1443	983	7268	3057	654	446
V	16,024	6721	1443	983	7268	3049	654	446
W	16,024	6703	1443	983	7268	3040	654	446
X	16,024	6778	1460	983	7268	3074	662	446
Y	16,024	6853	1476	983	7268	3108	670	446
Z	16,024	7069	1509	983	7268	3206	684	446
Voltage: 6900-3-60								
U	16,024	6730	1443	983	7268	3053	654	446
V	16,024	6909	1476	983	7268	3134	670	446
W	16,024	7088	1509	983	7268	3215	684	446
X	16,024	7076	1509	983	7268	3210	684	446
Y	16,024	7064	1509	983	7268	3204	684	446
Z	16,024	7141	1542	983	7268	3239	699	446
Voltage: 11000-3-60								
G	16,024	7434	1700	983	7268	3372	771	486
H	16,024	7602	1768	983	7268	3448	802	486
J	16,024	7602	1768	983	7268	3448	802	486
K	16,024	7602	1768	983	7268	3448	802	446
L	16,024	7602	1768	983	7268	3448	802	486
M	16,024	7767	1837	983	7268	3523	833	486
Voltage: 13800-3-60								
U	16,024	7073	1509	983	7268	3208	684	446
V	16,024	7109	1526	983	7268	3225	692	446
W	16,024	7146	1542	983	7268	3241	699	446
X	16,024	7146	1542	983	7268	3241	699	446
Y	16,024	7146	1542	983	7268	3241	699	446
Z	16,024	7295	1575	983	7268	3309	714	446

NOTE(S):

a. Total compressor weight is the sum of the compressor aerodynamic components (compressor weight column), stator, rotor, and end bell cover weights.
b. See Model Number Nomenclature.
c. Compressor aerodynamic component weight only, motor weight not included. Applicable to standard compressors only. For high lift compressors, contact Carrier Chiller Marketing for weights.

Table 12 — 19XR Compressor and Motor Weights[a] — High-Efficiency Motors Two-Stage Compressor Frame Size 7, 50 Hz[b]

MOTOR CODE	ENGLISH (lb)				SI (kg)			
	Compressor Weight[c]	Stator and Housing Weight	Rotor and Shaft Weight	End Bell Cover Weight	Compressor Weight[c]	Stator and Housing Weight	Rotor and Shaft Weight	End Bell Cover Weight
Voltage: 3000-3-50								
U	16,024	6725	1443	983	7268	3050	654	446
V	16,024	6716	1443	983	7268	3046	654	446
W	16,024	6706	1443	983	7268	3042	654	446
X	16,024	6802	1460	983	7268	3085	662	446
Y	16,024	6899	1476	983	7268	3129	670	446
Z	16,024	7066	1509	983	7268	3205	684	446
Voltage: 3300-3-50								
U	16,024	6743	1443	983	7268	3059	654	446
V	16,024	6739	1443	983	7268	3057	654	446
W	16,024	6734	1443	983	7268	3054	654	446
X	16,024	6826	1460	983	7268	3096	662	446
Y	16,024	6917	1476	983	7268	3137	670	446
Z	16,024	7075	1509	983	7268	3209	684	446
Voltage: 6300-3-50								
U	16,024	6743	1443	983	7268	3059	654	446
V	16,024	6900	1476	983	7268	3130	670	446
W	16,024	7058	1509	983	7268	3201	684	446
X	16,024	7130	1526	983	7268	3234	692	446
Y	16,024	7203	1542	983	7268	3267	699	446
Z	16,024	7203	1542	983	7268	3267	699	446
Voltage: 10000-3-50								
G	16,024	7269	1631	983	7268	3297	740	446
H	16,024	7269	1631	983	7268	3297	740	446
J	16,024	7269	1631	983	7268	3297	740	446
K	16,024	7602	1768	983	7268	3448	802	446
L	16,024	7602	1768	983	7268	3448	802	446
M	16,024	7769	1837	983	7268	3523	833	446
Voltage: 11000-3-50								
G	16,024	7434	1700	983	7268	3372	771	446
H	16,024	7602	1768	983	7268	3448	802	446
J	16,024	7602	1768	983	7268	3448	802	446
K	16,024	7602	1768	983	7268	3448	802	446
L	16,024	7602	1768	983	7268	3448	802	446
M	16,024	7767	1837	983	7268	3523	833	446

NOTE(S):

a. Total compressor weight is the sum of the compressor aerodynamic components (compressor weight column), stator, rotor, and end bell cover weights.
b. See Model Number Nomenclature.
c. Compressor aerodynamic component weight only, motor weight not included. Applicable to standard compressors only. For high lift compressors, contact Carrier Chiller Marketing for weights.

Table 13 — Economizer Weight[a]

FRAME SIZE	DRY WEIGHT (lb)	REFRIGERANT WEIGHT (lb)	OPERATION WEIGHT (lb)	DRY WEIGHT (kg)	REFRIGERANT WEIGHT (kg)	OPERATION WEIGHT (kg)
XRC (fr 5 HX)	1019	210	1229	462	95	557
XRC (fr 6,7 HX)	1252	250	1502	568	113	681
XRE	1054	283	1337	478	128	606
XR6	1589	360	1949	721	163	884
XR7	2749	646	3395	1247	293	1540

NOTE(S):

a. Dry weight includes economizer weight and all connecting piping to compressor.

Table 14 — 19XR Additional Data for Marine Waterboxes (19XR2-E)[a,b]

HEAT EXCHANGER FRAME, PASS	ENGLISH					SI				
	psig	Rigging Weight (Lb)		Water Volume (Gal)		kPa	Rigging Weight (Kg)		Water Volume (L)	
		Cooler	Condenser	Cooler	Condenser		Cooler	Condenser	Cooler	Condenser
Frame 2, 1 and 3 Pass	150	730	—	84	—	1034	331	—	318	—
Frame 2, 2 Pass		365	365	42	42		166	166	159	159
Frame 3, 1 and 3 Pass		730	—	84	—		331	—	318	—
Frame 3, 2 Pass		365	365	42	42		166	166	159	159
Frame 4, 1 and 3 Pass		1888	—	109	—		856	—	412	—
Frame 4, 2 Pass		944	989	54	54		428	449	205	205
Frame 5, 1 and 3 Pass		2445	—	122	—		1109	—	462	—
Frame 5, 2 Pass		1223	1195	61	60		555	542	231	226
Frame 6, 1 and 3 Pass		2860	—	139	—		1297	—	524	—
Frame 6, 2 Pass		1430	1443	69	69		649	655	262	262
Frame 7, 1 and 3 Pass		3970	—	309	—		1801	—	1170	—
Frame 7, 2 Pass		1720	1561	155	123		780	708	585	465
Frame 8, 1 and 3 Pass		5048	—	364	—		2290	—	1376	—
Frame 8, 2 Pass		2182	1751	182	141		990	794	688	532
Frame 2, 1 and 3 Pass	300	860	—	84	—	2068	390	—	318	—
Frame 2, 2 Pass		430	430	42	42		195	195	159	159
Frame 3, 1 and 3 Pass		860	—	84	—		390	—	318	—
Frame 3, 2 Pass		430	430	42	42		195	195	159	159
Frame 4, 1 and 3 Pass		2162	—	109	—		981	—	412	—
Frame 4, 2 Pass		1552	1641	47	47		704	744	178	178
Frame 5, 1 and 3 Pass		2655	—	122	—		1204	—	462	—
Frame 5, 2 Pass		1965	1909	53	50		891	866	199	190
Frame 6, 1 and 3 Pass		3330	—	139	—		1510	—	524	—
Frame 6, 2 Pass		2425	2451	58	58		1100	1112	218	218
Frame 7, 1 and 3 Pass		5294	—	309	—		2401	—	1170	—
Frame 7, 2 Pass		4140	4652	146	94		1878	2110	553	356
Frame 8, 1 and 3 Pass		6222	—	364	—		2822	—	1376	—
Frame 8, 2 Pass		4952	4559	161	94		2246	2068	609	355

NOTE(S):

a. Add to heat exchanger data for total weights or volumes.
b. For the total weight of a vessel with a marine waterbox, add these values to the heat exchanger weights (or volumes).

Table 15 — 19XRV Additional Data for Marine Waterboxes (19XR6/7)[a,b]

HEAT EXCHANGER FRAME, PASS	COUPLING TYPE	ENGLISH (lb)					SI (kg)				
		psig	Rigging Weight		Water Weight		kPa	Rigging Weight		Water Weight	
			Cooler	Condenser	Cooler	Condenser		Cooler	Condenser	Cooler	Condenser
Size 6, Frame A, 1 Pass	Victaulic	150	2,794	2,582	6,515	5,648	1034	1267	1171	2955	2562
	Flange		3,124	2,912				1417	1321		
Size 6, Frame A, 2 Pass	Victaulic		2,454	2,236	2,979	2,613		1113	1014	2979	1185
	Flange		2,650	2,432				1202	1103		
Size 6, Frame A, 3 Pass	Victaulic		2,771	2,840	4,190	3,950		1157	1288	1900	1792
	Flange		2,899	3,020				1315	1370		
Size 6, Frame B, 1 Pass	Victaulic		—	2,604	—	6,975		—	1181	—	3162
	Flange			2,934					1331		
Size 6, Frame B, 2 Pass	Victaulic		—	2,459	—	3,600		—	1115	—	1633
	Flange			2,719					1233		
Size 6, Frame B, 3 Pass	Victaulic		—	2,770	—	4,858		—	1256	—	2203
	Flange			2,950					1338		
Size 7 Frame B, 1 Pass	Victaulic		4,045	—	8,103	—		1835	—	3675	—
	Flange		4,375	—				1984	—		
Size 7 Frame B, 2 Pass	Victaulic		3,648	—	4,139	—		1655	—	1877	—
	Flange		3,908	—				1773	—		
Size 7 Frame B, 3 Pass	Victaulic		4,160	—	5,633	—		1887	—	2555	—
	Flange		4,340	—				1969	—		
Size 7 Frame C, 1 Pass	Victaulic		4,828	4,273	10,264	9,858		2190	1938	4655	4472
	Flange		5,158	4,713				2340	2138		
Size 7 Frame C, 2 Pass	Victaulic		4,375	3,714	5,201	4,826		1984	1685	2359	2189
	Flange		4,635	4,044				2102	1834		
Size 7 Frame C, 3 Pass	Victaulic		4,957	4,434	7,144	6,819		2248	2011	3240	3093
	Flange		5,137	4,630				2330	2100		
Size 7 Frame D, 1 Pass	Victaulic		—	4,863	—	12,530		—	2206	—	5684
	Flange		—	5,303				—	2405		
Size 7 Frame D, 2 Pass	Victaulic		—	4,243	—	6,074		—	1925	—	2755
	Flange		—	4,573				—	2074		
Size 7 Frame D, 3 Pass	Victaulic		—	5,079	—	8,659		—	2303	—	3928
	Flange		—	5,275				—	2393		
Size 6, Frame A, 1 Pass	Victaulic	300	2,794	2,582	6,515	5,648	2068		1171	2955	2562
	Flange		3,124	2,912				1417	1321		
Size 6, Frame A, 2 Pass	Victaulic		2,454	2,236	2,979	2,613		1113	1014	2979	1185
	Flange		2,650	2,432				1202	1103		
Size 6, Frame A, 3 Pass	Victaulic		2,771	2,840	4,190	3,950		1157	1288	1900	1792
	Flange		2,899	3,020				1315	1370		
Size 6, Frame B, 1 Pass	Victaulic		—	2,604	—	6,975		—	1181	—	3162
	Flange			2,934					1331		
Size 6, Frame B, 2 Pass	Victaulic		—	2,459	—	3,600		—	1115	—	1633
	Flange			2,719					1233		
Size 6, Frame B, 3 Pass	Victaulic		—	2,770	—	4,858		—	1256	—	2203
	Flange			2,950					1338		
Size 7 Frame B, 1 Pass	Victaulic		8,305	—	5,783	—		3767	—	2623	—
	Flange		8,635	—				3917	—		
Size 7 Frame B, 2 Pass	Victaulic		7,426	—	2,382	—		3368	—	1080	—
	Flange		7,686	—				3486	—		
Size 7 Frame B, 3 Pass	Victaulic		7,785	—	3,268	—		3531	—	1482	—
	Flange		7,965	—				3612	—		
Size 7 Frame C, 1 Pass	Victaulic		11,001	9,228	7,030	7,591		4990	4186	3188	3443
	Flange		11,331	9,668				5140	4385		
Size 7 Frame C, 2 Pass	Victaulic		9,829	8,003	2,708	3,061		4458	3630	1228	1388
	Flange		10,089	8,333				4576	3682		
Size 7 Frame C, 3 Pass	Victaulic		10,343	8,647	3,866	4,468		4692	3922	1753	—
	Flange		10,053	8,843				4773	—		
Size 7 Frame D, 1 Pass	Victaulic		—	12,940	—	9,365		—	5869	—	4248
	Flange		—	13,380				—	5927		
Size 7 Frame D, 2 Pass	Victaulic		—	11,170	—	3,607		—	5067	—	1925
	Flange		—	11,500				—	5102		
Size 7 Frame D, 3 Pass	Victaulic		—	12,042	—	5,398		—	5462	—	—
	Flange		—	12,238				—	—		

NOTE(S):

a. Add to heat exchanger data for total weights or volumes.
b. For the total weight of a vessel with a marine waterbox, add these values to the heat exchanger weights (or volumes).

Table 16 — Additional Weights for 19XR 150 psig (1034 kPa) Marine Waterboxes[a,b] Two-Stage Compressors, Frame Size 6

FRAME	NUMBER OF PASSES	ENGLISH (lb)						METRIC (kg)					
		Cooler			Condenser			Cooler			Condenser		
		Rigging Weight		Water Weight	Rigging Weight		Water Weight	Rigging Weight		Water Weight	Rigging Weight		Water Weight
		Victaulic	Flange		Victaulic	Flange		Victaulic	Flange		Victaulic	Flange	
A	1	2794	3124	6515	2582	2912	5648	1267	1417	2955	1171	1321	2562
	2	2454	2650	2979	2236	2432	2613	1113	1202	2979	1014	1103	1185
	3	2771	2899	4190	2840	3020	3950	1157	1315	1900	1288	1370	1792
B	1	—	—	—	2604	2934	6975	—	—	—	1181	1331	3162
	2	—	—	—	2459	2719	3600	—	—	—	1115	1233	1633
	3	—	—	—	2770	2950	4858	—	—	—	1256	1338	2203

NOTE(S):

a. Add to cooler and condenser weights for total weights. Cooler and condenser weights may be found in Tables 5-12. The first digit of the heat exchanger code (first column) is the heat exchanger frame size.
b. Values are for Victaulic nozzles, two-pass dished head design.

Table 17 — Additional Weights for 19XR 300 psig (2068 kPa) ASME Marine Waterboxes[a] Two-Stage Compressors, Frame Size 6

FRAME	NUMBER OF PASSES	ENGLISH (lb)						METRIC (kg)					
		Cooler			Condenser			Cooler			Condenser		
		Rigging Weight		Water Weight	Rigging Weight		Water Weight	Rigging Weight		Water Weight	Rigging Weight		Water Weight
		Victaulic	Flange		Victaulic	Flange		Victaulic	Flange		Victaulic	Flange	
A	1	6379	6709	5058	5573	5903	4426	2893	3043	2294	2528	2678	2008
	2	5594	5790	2101	4834	5030	1890	2537	2626	953	2193	2282	857
	3	6031	6159	3005	5310	5490	2688	2736	2794	1363	2409	2490	1219
B	1	—	—	—	7084	7414	5509	—	—	—	3213	3363	2499
	2	—	—	—	6474	6734	2577	—	—	—	2937	3054	1169
	3	—	—	—	6816	6996	3340	—	—	—	3092	3173	1515

NOTE(S):

a. Add to cooler and condenser weights for total weights. Cooler and condenser weights may be found in Tables 5-12. The first digit of the heat exchanger code (first column) is the heat exchanger frame size.

LEGEND

ASME — American Society of Mechanical Engineers

Table 18 — Additional Weights for 19XR 150 psig (1034 kPa) Marine Waterboxes[a,b] Two-Stage Compressors, Frame Size 7

FRAME	NUMBER OF PASSES	ENGLISH (lb)						METRIC (kg)					
		Cooler			Condenser			Cooler			Condenser		
		Rigging Weight		Water Weight	Rigging Weight		Water Weight	Rigging Weight		Water Weight	Rigging Weight		Water Weight
		Victaulic	Flange		Victaulic	Flange		Victaulic	Flange		Victaulic	Flange	
B	1	4045	4375	8103	—	—	—	1835	1984	3675	—	—	—
	2	3648	3908	4139	—	—	—	1655	1773	1877	—	—	—
	3	4160	4340	5633	—	—	—	1887	1969	2555	—	—	—
C	1	4828	5158	10,264	4273	4713	9858	2190	2340	4655	1938	2138	4472
	2	4375	4635	5201	3714	4044	4826	1984	2102	2359	1685	1834	2189
	3	4957	5137	7144	4434	4630	6819	2248	2330	3240	2011	2100	3093
D	1	—	—	—	4863	5303	12,530	—	—	—	2206	2405	5684
	2	—	—	—	4243	4573	6074	—	—	—	1925	2074	2755
	3	—	—	—	5079	5275	8659	—	—	—	2303	2393	3928

NOTE(S):

a. Add to cooler and condenser weights for total weights. Cooler and condenser weights may be found in Tables 5-12. The first digit of the heat exchanger code (first column) is the heat exchanger frame size.
b. Values are for Victaulic nozzles, two-pass dished head design.

Table 19 — Additional Weights for 19XR 300 psig (2068 kPa) ASME Marine Waterboxes[a] Two-Stage Compressors, Frame Size 7

FRAME	NUMBER OF PASSES	ENGLISH (lb)						METRIC (kg)					
		Cooler			Condenser			Cooler			Condenser		
		Rigging Weight		Water Weight	Rigging Weight		Water Weight	Rigging Weight		Water Weight	Rigging Weight		Water Weight
		Victaulic	Flange		Victaulic	Flange		Victaulic	Flange		Victaulic	Flange	
B	1	8305	8635	5783	—	—	—	3767	3917	2623	—	—	—
	2	7426	7686	2382	—	—	—	3368	3486	1080	—	—	—
	3	7785	7965	3268	—	—	—	3531	3612	1482	—	—	—
C	1	11,001	11,331	7030	9228	9668	7591	4990	5140	3188	4186	4385	3443
	2	9829	10,089	2708	8003	8333	3061	4458	4576	1228	3630	3682	1388
	3	10,343	10,053	3866	8647	8843	4468	4692	4773	1753	3922	6069	2027
D	1	—	—	—	12,940	13,380	9365	—	—	—	5869	5927	4248
	2	—	—	—	11,170	11,500	3607	—	—	—	5067	5102	1925
	3	—	—	—	12,042	12,238	5398	—	—	—	5462	5551	2448

NOTE(S):

a. Add to cooler and condenser weights for total weights. Cooler and condenser weights may be found in Tables 5-12. The first digit of the heat exchanger code (first column) is the heat exchanger frame size.

LEGEND

ASME — American Society of Mechanical Engineers

Table 20 — 19XR Heat Exchanger Weights [a,b,c,d]

CODE	ENGLISH						SI					
	Dry Rigging Weight (lb)		Machine Charge				Dry Rigging Weight (kg)		Machine Charge			
	Evaporator Only	Condenser Only	Refrigerant Weight (lb)		Water Weight (lb)		Evaporator Only	Condenser Only	Refrigerant Weight (kg)		Water Weight (kg)	
			Evaporator	Condenser	Evaporator	Condenser			Evaporator	Condenser	Evaporator	Condenser
20	3407	3373	416	252	402	398	1547	1531	189	114	183	181
21	3555	3540	459	252	456	462	1614	1607	208	114	207	210
22	3711	3704	505	252	514	526	1685	1682	229	114	233	239
30	4071	3694	510	308	464	464	1848	1677	232	140	211	211
31	4253	3899	565	308	531	543	1931	1770	257	140	241	247
32	4445	4100	626	308	601	621	2018	1861	284	140	273	282
35	4343	4606	577	349	511	513	1972	2091	262	158	232	233
36	4551	4840	639	349	587	603	2066	2197	290	158	266	274
37	4769	5069	709	349	667	692	2165	2301	322	158	303	314
40	4908	5039	726	338	863	915	2228	2288	330	153	392	415
41	5078	5232	783	338	930	995	2305	2375	355	153	422	452
42	5226	5424	840	338	990	1074	2373	2462	381	153	449	488
45	5363	5602	821	383	938	998	2435	2543	373	174	426	453
46	5559	5824	874	383	1014	1088	2524	2644	397	174	460	494
47	5730	6044	949	383	1083	1179	2601	2744	431	174	492	535
50	5713	6090	897	446	1101	1225	2594	2765	407	202	500	556
51	5940	6283	974	446	1192	1304	2697	2852	442	202	541	592
52	6083	6464	1021	446	1248	1379	2762	2935	464	202	567	626
53	6141	6529	1010	446	1277	1409	2788	2964	459	202	580	640
54	6192	6591	987	446	1302	1439	2811	2992	448	202	591	653
55	6257	6785	1014	504	1201	1339	2841	3080	460	229	545	608
56	6517	7007	1101	504	1304	1429	2959	3181	500	229	592	649
57	6682	7215	1154	504	1369	1514	3034	3276	524	229	622	687
58	6751	7291	1143	504	1401	1550	3065	3310	519	229	636	704
59	6811	7363	1116	504	1430	1583	3092	3343	507	229	649	719
5A	5124	—	491	—	1023	—	2326	—	223	—	464	—
5B	5177	—	510	—	1050	—	2350	—	232	—	477	—
5C	5243	—	532	—	1079	—	2380	—	242	—	490	—
5F	5577	—	553	—	1113	—	2532	—	251	—	505	—
5G	5640	—	575	—	1143	—	2561	—	261	—	519	—
5H	5716	—	600	—	1176	—	2595	—	272	—	534	—
5K	4993	—	673	—	1067	—	2267	—	306	—	484	—
5L	5090	—	706	—	1118	—	2311	—	321	—	508	—
5M	5165	—	742	—	1162	—	2345	—	337	—	528	—
5P	5041	—	641	—	1111	—	2289	—	291	—	504	—
5Q	5131	—	678	—	1155	—	2329	—	308	—	524	—
5R	5214	—	709	—	1206	—	2367	—	322	—	548	—
5T	5425	—	768	—	1162	—	2463	—	349	—	528	—
5U	5534	—	801	—	1220	—	2512	—	364	—	554	—
5V	5620	—	843	—	1270	—	2551	—	383	—	577	—
5X	5484	—	730	—	1212	—	2490	—	331	—	550	—
5Y	5584	—	769	—	1262	—	2535	—	349	—	573	—
5Z	5678	—	805	—	1320	—	2578	—	365	—	599	—
60	6719	6764	1091	479	1400	1521	3050	3071	495	217	636	691
61	6895	6949	1150	479	1470	1597	3130	3155	522	217	667	725
62	7038	7130	1202	479	1527	1671	3195	3237	546	217	693	759
63	7103	7199	1202	479	1559	1704	3225	3268	546	217	708	774
64	7161	7264	1178	479	1587	1735	3251	3298	535	217	720	788
65	7392	6782	1241	542	1530	1667	3356	3079	563	246	695	757
66	7594	7894	1309	542	1610	1753	3448	3584	594	246	731	796
67	7759	8102	1369	542	1674	1838	3523	3678	622	246	760	834
68	7836	8182	1359	542	1711	1875	3558	3715	617	246	777	851
69	7905	8258	1332	542	1743	1911	3589	3749	605	246	791	868
6K	5,716	—	760	—	1291	—	2595	—	345	—	586	—
6L	5,804	—	797	—	1341	—	2635	—	362	—	609	—
6M	5,894	—	828	—	1399	—	2676	—	376	—	635	—
6P	5,768	—	725	—	1338	—	2619	—	329	—	607	—
6Q	5,852	—	764	—	1385	—	2657	—	347	—	629	—
6R	5,938	—	798	—	1439	—	2696	—	362	—	653	—
6T	6,230	—	863	—	1405	—	2828	—	392	—	638	—
6U	6,330	—	905	—	1462	—	2874	—	411	—	664	—
6V	6,433	—	941	—	1528	—	2921	—	427	—	694	—
6X	6,293	—	823	—	1459	—	2857	—	374	—	662	—
6Y	6,388	—	868	—	1512	—	2900	—	394	—	686	—
6Z	6,487	—	906	—	1574	—	2945	—	411	—	715	—

Table 20 — 19XR Heat Exchanger Weights (cont)[a,b,c,d]

CODE	ENGLISH						SI					
	Dry Rigging Weight (lb)		Machine Charge				Dry Rigging Weight (kg)		Machine Charge			
	Evaporator Only	Condenser Only	Refrigerant Weight (lb)		Water Weight (lb)		Evaporator Only	Condenser Only	Refrigerant Weight (kg)		Water Weight (kg)	
			Evaporator	Condenser	Evaporator	Condenser			Evaporator	Condenser	Evaporator	Condenser
70	9,942	10,786	1409	840	2008	2225	4514	4897	640	381	912	1010
71	10,330	11,211	1539	840	2164	2389	4690	5090	699	381	982	1085
72	10,632	11,622	1646	840	2286	2548	4827	5276	747	381	1038	1157
73	10,715	11,737	1622	840	2328	2604	4865	5329	736	381	1057	1182
74	10,790	11,775	1584	840	2366	2622	4899	5346	719	381	1074	1190
75	10,840	11,859	1599	950	2183	2431	4921	5384	726	431	991	1104
76	11,289	12,345	1747	950	2361	2619	5125	5605	793	431	1072	1189
77	11,638	12,814	1869	950	2501	2801	5284	5818	849	431	1135	1272
78	11,738	12,949	1849	950	2548	2864	5329	5879	839	431	1157	1300
79	11,828	12,994	1806	950	2592	2885	5370	5899	820	431	1177	1310
7K	8,728	—	1047	—	1948	—	3963	—	475	—	884	—
7L	8,959	—	1132	—	2094	—	4067	—	514	—	951	—
7M	9,161	—	1214	—	2229	—	4159	—	551	—	1012	—
7P	8,792	—	1002	—	2010	—	3992	—	455	—	913	—
7Q	9,023	—	1087	—	2156	—	4096	—	493	—	979	—
7R	9,229	—	1167	—	2295	—	4190	—	530	—	1042	—
7T	9,431	—	1194	—	2115	—	4282	—	542	—	960	—
7U	9,698	—	1292	—	2282	—	4403	—	587	—	1036	—
7V	9,932	—	1403	—	2436	—	4509	—	637	—	1106	—
7X	9,510	—	1142	—	2185	—	4318	—	518	—	992	—
7Y	9,777	—	1240	—	2352	—	4439	—	563	—	1068	—
7Z	10,016	—	1347	—	2511	—	4547	—	612	—	1140	—
80	12,664	12,753	1700	836	2726	2977	5749	5790	772	380	1238	1352
81	12,998	13,149	1812	836	2863	3143	5901	5970	823	380	1300	1427
82	13,347	13,545	1928	836	3005	3309	6060	6149	875	380	1364	1502
83	13,437	13,872	1877	836	3053	3476	6100	6298	852	380	1386	1578
84	13,523	14,217	1840	836	3099	3651	6139	6455	835	380	1407	1658
85	13,804	14,008	1927	945	2951	3238	6267	6360	875	429	1340	1470
86	14,191	14,465	2054	945	3108	3428	6443	6567	933	429	1411	1556
87	14,597	14,923	2186	945	3271	3618	6627	6775	992	429	1485	1643
88	14,705	15,311	2142	945	3325	3608	6676	6951	972	429	1510	1638
89	14,808	15,721	2099	945	3378	4009	6723	7137	953	429	1534	1820
8K	11,153	—	1385	—	2760	—	5063	—	629	—	1253	—
8L	11,400	—	1484	—	2926	—	5176	—	674	—	1328	—
8M	11,650	—	1589	—	3088	—	5289	—	721	—	1402	—
8P	11,219	—	1334	—	2830	—	5093	—	606	—	1285	—
8Q	11,470	—	1430	—	2999	—	5207	—	649	—	1362	—
8R	11,719	—	1535	—	3161	—	5320	—	697	—	1435	—
8T	12,069	—	1580	—	2991	—	5479	—	717	—	1358	—
8U	12,357	—	1694	—	3180	—	5610	—	769	—	1444	—
8V	12,645	—	1814	—	3365	—	5741	—	824	—	1528	—
8X	12,152	—	1522	—	3070	—	5517	—	691	—	1394	—
8Y	12,444	—	1632	—	3264	—	5650	—	741	—	1482	—
8Z	12,733	—	1752	—	3448	—	5781	—	795	—	1565	—
A40	16,877	18,542	1647	927	4328	4553	7655	8 410	747	420	1963	2065
A41	17,270	19,062	1773	927	4557	4890	7833	8 646	804	420	2067	2218
A42	17,690	19,565	1887	927	4816	5213	8024	8 875	856	420	2184	2365
A45	16,968	18,493	1599	927	4453	4582	7697	8 388	725	420	2020	2078
A46	17,371	19,063	1714	927	4701	4949	7879	8 647	777	420	2132	2245
A47	17,761	19,578	1837	927	4941	5281	8056	8 880	833	420	2241	2395
A60	18,354	20,139	1878	1074	4721	5029	8325	9 135	852	487	2141	2281
A61	18,807	20,745	2022	1074	4984	5415	8531	9 410	917	487	2261	2456
A62	19,295	21,330	2152	1074	5280	5786	8752	9 675	976	487	2395	2624
A65	18,469	20,095	1823	1074	4859	5060	8377	9 115	827	487	2204	2295
A66	18,936	20,758	1954	1074	5144	5482	8589	9 416	886	487	2333	2487
A67	19,389	21,357	2095	1074	5419	5862	8795	9 687	950	487	2458	2659
A4A	15,540	17,089	1681	861	4183	4524	7049	7 751	762	391	1897	2052
A4B	15,794	17,472	1792	861	4392	4859	7164	7 925	813	391	1992	2204
A4C	16,063	17,812	1897	861	4615	5137	7286	8 079	860	391	2093	2330
A4F	15,592	17,076	1626	861	4322	4588	7072	7 746	738	391	1960	2081
A4G	15,845	17,405	1736	861	4531	4867	7187	7 895	787	391	2055	2208
A4H	16,249	17,821	1890	861	4865	5219	7370	8 083	857	391	2207	2367
A6A	16,465	18,359	1917	998	4555	4996	7468	8 328	870	453	2066	2266
A6B	16,758	18,806	2044	998	4794	5368	7601	8 530	927	453	2175	2435
A6C	17,070	19,202	2164	998	5050	5698	7743	8 710	982	453	2291	2585
A6F	16,535	18,356	1854	998	4709	5068	7500	8 326	841	453	2136	2299

Table 20 — 19XR Heat Exchanger Weights (cont)[a,b,c,d]

CODE	ENGLISH						SI					
	Dry Rigging Weight (lb)		Machine Charge				Dry Rigging Weight (kg)		Machine Charge			
	Evaporator Only	Condenser Only	Refrigerant Weight (lb)		Water Weight (lb)		Evaporator Only	Condenser Only	Refrigerant Weight (kg)		Water Weight (kg)	
			Evaporator	Condenser	Evaporator	Condenser			Evaporator	Condenser	Evaporator	Condenser
A6G	16,829	18,739	1979	998	4948	5387	7633	8 500	898	453	2244	2444
A6H	17,296	19,225	2156	998	5331	6156	7845	8 730	978	453	2418	2792
B40	—	21,217	—	1233	—	5850	—	9 624	—	559	—	2653
B41	—	21,965	—	1233	—	6333	—	9 963	—	559	—	2873
B42	—	22,581	—	1233	—	6729	—	10 243	—	559	—	3052
B45	—	21,173	—	1233	—	5904	—	9 604	—	559	—	2678
B46	—	21,909	—	1233	—	6379	—	9 938	—	559	—	2893
B47	—	22,653	—	1233	—	6859	—	10 275	—	559	—	3111
B60	—	23,061	—	1423	—	6464	—	10 460	—	645	—	2932
B61	—	23,932	—	1423	—	7018	—	10 855	—	645	—	3183
B62	—	24,649	—	1423	—	7473	—	11 181	—	645	—	3390
B65	—	23,022	—	1423	—	6521	—	10 442	—	645	—	2958
B66	—	23,879	—	1423	—	7066	—	10 831	—	645	—	3205
B67	—	24,745	—	1423	—	7617	—	11 224	—	645	—	3455
B4A	—	19,217	—	1148	—	5756	—	8 717	—	521	—	2611
B4B	—	19,793	—	1148	—	6243	—	8 978	—	521	—	2832
B4C	—	20,254	—	1148	—	6633	—	9 187	—	521	—	3009
B4F	—	19,217	—	1148	—	5852	—	8 717	—	521	—	2654
B4G	—	19,721	—	1148	—	6279	—	8 945	—	521	—	2848
B4H	—	20,318	—	1148	—	6785	—	9 216	—	521	—	3078
B6A	—	20,794	—	1326	—	6357	—	9 432	—	601	—	2883
B6B	—	21,465	—	1326	—	6915	—	9 736	—	601	—	3137
B6C	—	22,002	—	1326	—	7362	—	9 980	—	601	—	3339
B6F	—	20,806	—	1326	—	6462	—	9 487	—	601	—	2931
B6G	—	21,393	—	1326	—	6951	—	9 704	—	601	—	3153
B6H	—	22,088	—	1326	—	8379	—	10 019	—	601	—	3801
B60	24,704	—	2273	—	6,340	—	11 206	—	1031	—	2876	—
B61	25,337	—	2355	—	6,737	—	11 493	—	1068	—	3056	—
B62	25,964	—	2460	—	7,116	—	11 777	—	1116	—	3228	—
B65	25,014	—	2185	—	6,485	—	11 346	—	991	—	2941	—
B66	25,631	—	2275	—	6,873	—	11 626	—	1032	—	3118	—
B67	26,264	—	2379	—	7,255	—	11 913	—	1079	—	3291	—
B6A	22,819	—	2081	—	6,159	—	10 351	—	944	—	2794	—
B6B	23,299	—	2162	—	6,568	—	10 568	—	981	—	2979	—
B6C	23,829	—	2256	—	6,993	—	10 809	—	1023	—	3172	—
B6G	23,648	—	2019	—	6,774	—	10 727	—	916	—	3073	—
B6H	24,171	—	2120	—	7,194	—	10 964	—	962	—	3263	—
B80	26,184	—	2557	—	6,766	—	11 877	—	1160	—	3069	—
B81	26,922	—	2649	—	7,208	—	12 212	—	1202	—	3269	—
B82	27,627	—	2768	—	7,629	—	12 531	—	1256	—	3460	—
B85	26,438	—	2458	—	6,923	—	11 992	—	1115	—	3141	—
B86	27,157	—	2559	—	7,355	—	12 318	—	1161	—	3336	—
B87	27,868	—	2676	—	7,780	—	11 214	—	1214	—	3529	—
B8A	24,164	—	2341	—	6,580	—	10 952	—	1062	—	2885	—
B8B	24,722	—	2432	—	7,036	—	11 214	—	1103	—	3191	—
B8C	25,317	—	2538	—	7,510	—	11 484	—	1151	—	3406	—
B8F	24,403	—	2195	—	6,783	—	11 069	—	996	—	3077	—
B8G	25,011	—	2271	—	7,262	—	11 345	—	1030	—	3294	—
B8H	25,599	—	2385	—	7,731	—	11 612	—	1082	—	3507	—
C60	30,825	29,857	2647	1610	8,475	8,630	13 982	13 543	1201	730	3841	3914
C61	31,536	30,881	2751	1610	8,924	9,275	14 304	14 007	1248	730	4048	4207
C62	32,467	31,871	2875	1610	9,474	9,916	14 727	14 456	1304	730	4297	4498
C65	31,135	29,982	2562	1610	8,645	8,684	14 123	13 600	1162	730	3921	3939
C66	31,851	31,064	2666	1610	9,097	9,362	14 447	14 090	1209	730	4126	4247
C67	32,777	32,186	2793	1610	9,644	10,078	14 867	14 599	1267	730	4374	4571
C6A	28,641	27,676	2443	1497	6,898	8,675	12 991	12 554	1108	679	3129	3935
C6B	29,167	28,315	2534	1497	7,352	9,216	13 230	12 843	1149	679	3325	4180
C6C	29,750	28,918	2627	1497	7,823	9,752	13 494	13 117	1192	679	3553	4423
C6F	28,929	27,774	2334	1497	7,724	8,710	13 222	12 508	1059	679	3504	3951
C6G	29,478	28,457	2415	1497	8,194	9,283	13 371	12 908	1095	679	3717	4211
C6H	30,083	29,223	2500	1497	8,681	9,935	13 645	13 255	1134	679	3938	4506
C80	22,433	31,810	2978	1811	9,084	9,312	10 175	14 429	1351	821	4120	4224
C81	22,315	32,955	3095	1811	9,589	10,029	10 122	14 948	1404	821	4349	4549
C82	22,231	34,094	3234	1811	10,208	10,742	10 084	15 465	1467	821	4630	4872
C85	22,534	31,911	2882	1811	9,275	9,367	10 221	14 475	1307	821	4207	4249
C86	22,416	33,113	2999	1811	9,784	10,120	10 168	14 020	1360	821	4438	4590

Table 20 — 19XR Heat Exchanger Weights (cont)[a,b,c,d]

CODE	ENGLISH						SI					
	Dry Rigging Weight (lb)		Machine Charge				Dry Rigging Weight (kg)		Machine Charge			
	Evaporator Only	Condenser Only	Refrigerant Weight (lb)		Water Weight (lb)		Evaporator Only	Condenser Only	Refrigerant Weight (kg)		Water Weight (kg)	
			Evaporator	Condenser	Evaporator	Condenser			Evaporator	Condenser	Evaporator	Condenser
C87	22,332	34,385	3142	1811	10,399	10,196	10 130	15 597	1425	821	4717	4625
C8A	30,378	19,664	2748	1684	7,310	9,387	10 175	8 919	1246	764	3316	4258
C8B	30,998	19,548	2851	1684	7,821	9,991	10 121	8 867	1293	764	3548	4532
C8C	31,679	19,463	2955	1684	8,351	10,589	10 083	8 816	1340	764	3788	4803
C8F	30,694	19,763	2626	1684	8,239	9,420	10 221	8 964	1191	764	3737	4273
C8G	31,340	19,641	2717	1684	8,768	10,059	10 167	8 909	1232	764	3977	4563
c8H	32,046	19,503	2813	1684	9,316	10,787	10 129	8 846	1276	764	4226	4893
D60	—	38,296	—	2097	—	11,473	—	17 371	—	951	—	5204
D61	—	39,624	—	2097	—	12,309	—	17 973	—	951	—	5583
D62	—	41,031	—	2097	—	13,210	—	18 611	—	951	—	5992
D65	—	37,624	—	2097	—	11,617	—	17 066	—	951	—	5269
D66	—	38,837	—	2097	—	12,387	—	17 616	—	951	—	5619
D67	—	40,460	—	2097	—	13,410	—	18 352	—	951	—	6083
D80	—	41,916	—	2359	—	12,447	—	19 013	—	1070	—	5646
D81	—	43,382	—	2359	—	13,388	—	19 678	—	1070	—	6073
D82	—	44,963	—	2359	—	14,401	—	20 395	—	1070	—	6532
D85	—	42,058	—	2359	—	12,609	—	19 077	—	1070	—	5719
D86	—	43,408	—	2359	—	13,475	—	19 690	—	1070	—	6112
D87	—	45,204	—	2359	—	14,626	—	20 504	—	1070	—	6634
D6A	—	35,286	—	1947	—	11,401	—	16 005	—	883	—	5171
D6B	—	36,328	—	1947	—	12,255	—	16 478	—	883	—	5559
D6C	—	37,288	—	1947	—	13,078	—	16 914	—	883	—	5932
D6F	—	34,447	—	1947	—	11,448	—	15 625	—	883	—	5193
D6G	—	35,637	—	1947	—	12,408	—	16 165	—	883	—	5628
D6H	—	36,663	—	1947	—	13,278	—	16 630	—	883	—	6023
D8A	—	38,494	—	2190	—	12,366	—	17 461	—	993	—	5609
D8B	—	39,633	—	2190	—	13,327	—	17 977	—	993	—	6045
D8C	—	40,731	—	2190	—	14,253	—	18 475	—	993	—	6465
D8F	—	38,479	—	2190	—	12,419	—	17 454	—	993	—	5633
D8G	—	39,761	—	2190	—	13,499	—	18 035	—	993	—	6123
D8H	—	40,922	—	2190	—	14,478	—	18 562	—	993	—	6567

NOTE(S):

a. Rigging weights are for standard tubes of standard wall thickness (0.025-in. [0.635 mm] wall) and do not include refrigerant weight.
b. See Model Number Nomenclature.
c. Evaporator weight includes the suction elbow and the distribution piping to the economizer and two-pass Victaulic dished heads.
d. Condenser weight includes the high side float chamber, discharge pipe, and the distribution piping weight from the economizer to the float chamber and two-pass Victaulic dished heads.

Table 21 — 19XR Waterbox Cover Weights Cooler Frames 2, 3[a]

WATERBOX DESCRIPTION	ENGLISH (lb)				METRIC (kg)			
	Cooler				Cooler			
	Frame 2		Frame 3		Frame 2		Frame 3	
	Std Nozzles	Flanged	Std Nozzles	Flanged	Std Nozzles	Flanged	Std Nozzles	Flanged
NIH, 1 Pass Cover, 150 psig (1034 kPa)	287	318	287	318	130	144	130	144
NIH, 2 Pass Cover, 150 psig (1034 kPa)	287	340	287	340	130	154	130	154
NIH, 3 Pass Cover, 150 psig (1034 kPa)	294	310	294	310	133	141	133	141
MWB End Cover, 150 psig (1034 kPa)	315	315	315	315	143	143	143	143
NIH/MWB Return Cover, 150 psig (1034 kPa)	243	243	243	243	110	110	110	110
NIH, 1 Pass Cover, 300 psig (2068 kPa)	411	486	411	486	186	220	186	220
NIH, 2 Pass Cover, 300 psig (2068 kPa)	411	518	411	518	186	235	186	235
NIH, 3 Pass Cover, 300 psig (2068 kPa)	433	468	433	468	196	212	196	212
NIH Plain End Cover, 300 psig (2068 kPa)	291	291	291	291	132	132	132	132
MWB End Cover, 300 psig (2068 kPa)	619	619	619	619	281	281	281	281
MWB Return Cover, 300 psig (2068 kPa)	445	445	445	445	202	202	202	202

NOTE(S):

a. Weight for NIH 2-pass cover, 150 psig (1034 kPa), is included in the heat exchanger weights shown in the heat exchanger weight tables.

LEGEND

NIH — Nozzle-in-Head
MWB — Marine Waterbox
STD — Standard

Table 22 — 19XR Waterbox Cover Weights Condenser Frames 2, 3[a]

WATERBOX DESCRIPTION	ENGLISH (lb)				METRIC (kg)			
	Condenser				Condenser			
	Frame 2		Frame 3		Frame 2		Frame 3	
	Std Nozzles	Flanged	Std Nozzles	Flanged	Std Nozzles	Flanged	Std Nozzles	Flanged
NIH, 1 Pass Cover, 150 psig (1034 kPa)	260	297	260	297	118	135	118	135
NIH, 2 Pass Cover, 150 psig (1034 kPa)	265	318	265	318	120	144	120	144
NIH, 3 Pass Cover, 150 psig (1034 kPa)	272	288	272	288	123	131	123	131
MWB End Cover, 150 psig (1034 kPa)	234	234	234	234	106	106	106	106
NIH/MWB Return Cover, 150 psig (1034 kPa)	225	225	225	225	102	102	102	102
NIH, 1 Pass Cover, 300 psig (2068 kPa)	379	454	379	454	172	206	172	206
NIH, 2 Pass Cover, 300 psig (2068 kPa)	379	486	379	486	172	220	172	220
NIH, 3 Pass Cover, 300 psig (2068 kPa)	401	436	401	436	182	198	182	198
NIH Plain End Cover, 300 psig (2068 kPa)	270	270	270	270	122	122	122	122
MWB End Cover, 300 psig (2068 kPa)	474	474	474	474	215	215	215	215
MWB Return Cover, 300 psig (2068 kPa)	359	359	359	359	163	163	163	163

NOTE(S):

a. Weight for NIH 2-pass cover, 150 psig (1034 kPa), is included in the heat exchanger weights shown in the heat exchanger weight tables.

LEGEND

NIH — Nozzle-in-Head
MWB — Marine Waterbox
STD — Standard

Table 23 — 19XR Waterbox Cover Weights Cooler Frames 4, 5[a]

WATERBOX DESCRIPTION	ENGLISH (lb)				METRIC (kg)			
	Cooler				Cooler			
	Frame 4		Frame 5		Frame 4		Frame 5	
	Std Nozzles	Flanged	Std Nozzles	Flanged	Std Nozzles	Flanged	Std Nozzles	Flanged
NIH, 1 Pass Cover, 150 psig (1034 kPa)	148	185	168	229	67	84	76	104
NIH, 2 Pass Cover, 150 psig (1034 kPa)	202	256	224	276	92	116	102	125
NIH, 3 Pass Cover, 150 psig (1034 kPa)	473	489	617	634	215	222	280	288
MWB End Cover, 150 psig (1034 kPa)	317	317	393	393	144	144	178	178
MWB Return Cover, 150 psig (1034 kPa)	138	138	154	154	63	63	70	70
NIH, 1 Pass Cover, 300 psig (2068 kPa)	633	709	764	839	287	322	347	381
NIH, 2 Pass Cover, 300 psig (2068 kPa)	626	689	761	867	284	313	345	394
NIH, 3 Pass Cover, 300 psig (2068 kPa)	660	694	795	830	299	315	361	376
NIH/MWB End Cover, 300 psig (2068 kPa)	522	522	658	658	237	237	298	298

NOTE(S):

a. Weight for NIH 2-pass cover, 150 psig (1034 kPa), is included in the heat exchanger weights shown in the heat exchanger weight tables.

LEGEND

NIH — Nozzle-in-Head
MWB — Marine Waterbox
STD — Standard

Table 24 — 19XR Waterbox Cover Weights Condenser Frames 4, 5[a]

WATERBOX DESCRIPTION	ENGLISH (lb)				METRIC (kg)			
	Condenser				Condenser			
	Frame 4		Frame 5		Frame 4		Frame 5	
	Std Nozzles	Flanged	Std Nozzles	Flanged	Std Nozzles	Flanged	Std Nozzles	Flanged
NIH, 1 Pass Cover, 150 psig (1034 kPa)	148	185	168	229	67	84	76	104
NIH, 2 Pass Cover, 150 psig (1034 kPa)	191	245	224	298	87	111	102	135
NIH, 3 Pass Cover, 150 psig (1034 kPa)	503	519	629	655	228	235	285	297
MWB End Cover, 150 psig (1034 kPa)	317	317	393	393	144	144	178	178
MWB Return Cover, 150 psig (1034 kPa)	138	138	154	154	63	63	70	70
NIH, 1 Pass Cover, 300 psig (2068 kPa)	633	709	764	839	287	322	347	381
NIH, 2 Pass Cover, 300 psig (2068 kPa)	622	729	727	878	282	331	330	393
NIH, 3 Pass Cover, 300 psig (2068 kPa)	655	689	785	838	297	313	356	376
NIH/MWB End Cover, 300 psig (2068 kPa)	522	522	658	658	237	237	298	298

NOTE(S):

a. Weight for NIH 2-pass cover, 150 psig (1034 kPa), is included in the heat exchanger weights shown in the heat exchanger weight tables.

LEGEND

NIH — Nozzle-in-Head
MWB — Marine Waterbox
STD — Standard

Table 25 — 19XR Waterbox Cover Weights Cooler Frames 6, 7[a]

WATERBOX DESCRIPTION	ENGLISH (lb)				METRIC (kg)			
	Cooler				Cooler			
	Frame 6		Frame 7		Frame 6		Frame 7	
	Std Nozzles	Flanged	Std Nozzles	Flanged	Std Nozzles	Flanged	Std Nozzles	Flanged
NIH, 1 Pass Cover, 150 psig (1034 kPa)	187	223	329	441	85	101	149	200
NIH, 2 Pass Cover, 150 psig (1034 kPa)	257	330	426	541	117	150	193	245
NIH, 3 Pass Cover, 150 psig (1034 kPa)	765	791	1250	1291	347	359	567	586
MWB End Cover, 150 psig (1034 kPa)	487	487	844	844	221	221	383	383
MWB Return Cover, 150 psig (1034 kPa)	172	172	315	315	78	78	143	143
NIH, 1 Pass Cover, 300 psig (2068 kPa)	978	1053	1712	1883	444	478	777	854
NIH, 2 Pass Cover, 300 psig (2068 kPa)	927	1078	1662	1908	420	489	754	865
NIH, 3 Pass Cover, 300 psig (2068 kPa)	997	1050	1724	1807	452	476	782	820
NIH/MWB End Cover, 300 psig (2068 kPa)	834	834	1378	1378	378	378	625	625

NOTE(S):

a. Weight for NIH 2-pass cover, 150 psig (1034 kPa), is included in the heat exchanger weights shown in the heat exchanger weight tables.

LEGEND

NIH — Nozzle-in-Head
MWB — Marine Waterbox
STD — Standard

Table 26 — 19XR Waterbox Cover Weights Condenser Frames 6, 7[a]

WATERBOX DESCRIPTION	ENGLISH (lb)				METRIC (kg)			
	Condenser				Condenser			
	Frame 6		Frame 7		Frame 6		Frame 7	
	Std Nozzles	Flanged	Std Nozzles	Flanged	Std Nozzles	Flanged	Std Nozzles	Flanged
NIH, 1 Pass Cover, 150 psig (1034 kPa)	187	223	329	441	85	101	149	200
NIH, 2 Pass Cover, 150 psig (1034 kPa)	245	330	404	520	111	150	183	236
NIH, 3 Pass Cover, 150 psig (1034 kPa)	772	843	1222	1280	350	382	554	580
MWB End Cover, 150 psig (1034 kPa)	487	487	781	781	221	221	354	354
MWB Return Cover, 150 psig (1034 kPa)	172	172	700	700	78	78	318	318
NIH, 1 Pass Cover, 300 psig (2068 kPa)	978	1053	315	315	444	478	143	143
NIH, 2 Pass Cover, 300 psig (2068 kPa)	923	1074	1690	1851	419	487	767	840
NIH, 3 Pass Cover, 300 psig (2068 kPa)	995	1049	1628	1862	451	476	738	845
NIH/MWB End Cover, 300 psig (2068 kPa)	834	834	1714	1831	378	378	777	831

NOTE(S):

a. Weight for NIH 2-pass cover, 150 psig (1034 kPa), is included in the heat exchanger weights shown in the heat exchanger weight tables.

LEGEND

NIH — Nozzle-in-Head
MWB — Marine Waterbox
STD — Standard

Table 27 — 19XR Waterbox Cover Weights Cooler Frame 8[a]

WATERBOX DESCRIPTION	ENGLISH (lb)		METRIC (kg)	
	Cooler		Cooler	
	Frame 8		Frame 8	
	Std Nozzles	Flanged	Std Nozzles	Flanged
NIH, 1 Pass Cover, 150 psig (1034 kPa)	417	494	189	224
NIH, 2 Pass Cover, 150 psig (1034 kPa)	540	693	245	314
NIH, 3 Pass Cover, 150 psig (1034 kPa)	1629	1687	739	765
MWB End Cover, 150 psig (1034 kPa)	1125	1125	510	510
MWB Return Cover, 150 psig (1034 kPa)	404	404	183	183
NIH, 1 Pass Cover, 300 psig (2068 kPa)	2359	2523	1070	1144
NIH, 2 Pass Cover, 300 psig (2068 kPa)	2369	2599	1075	1179
NIH, 3 Pass Cover, 300 psig (2068 kPa)	2353	2516	1067	1141
NIH/MWB End Cover, 300 psig (2068 kPa)	1951	1951	885	885

NOTE(S):

a. Weight for NIH 2-pass cover, 150 psig (1034 kPa), is included in the heat exchanger weights shown in the heat exchanger weight tables.

LEGEND

NIH — Nozzle-in-Head
MWB — Marine Waterbox
STD — Standard

Table 28 — 19XR Waterbox Cover Weights Condenser Frame 8[a]

WATERBOX DESCRIPTION	ENGLISH (lb)		METRIC (kg)	
	Condenser		Condenser	
	Frame 8		Frame 8	
	Std Nozzles	Flanged	Std Nozzles	Flanged
NIH, 1 Pass Cover, 150 psig (1034 kPa)	417	494	189	224
NIH, 2 Pass Cover, 150 psig (1034 kPa)	508	662	245	314
NIH, 3 Pass Cover, 150 psig (1034 kPa)	1469	1527	739	765
MWB End Cover, 150 psig (1034 kPa)	1007	1007	510	510
MWB Return Cover, 150 psig (1034 kPa)	1307	1307	183	183
NIH, 1 Pass Cover, 300 psig (2068 kPa)	404	404	1070	1144
NIH, 2 Pass Cover, 300 psig (2068 kPa)	1986	2151	1075	1179
NIH, 3 Pass Cover, 300 psig (2068 kPa)	1893	2222	1067	1141
NIH/MWB End Cover, 300 psig (2068 kPa)	1993	2112	885	885

NOTE(S):

a. Weight for NIH 2-pass cover, 150 psig (1034 kPa), is included in the heat exchanger weights shown in the heat exchanger weight tables.

LEGEND

NIH — Nozzle-in-Head
MWB — Marine Waterbox
STD — Standard

Table 29 — 19XR Waterbox Cover Weights, Two-Stage Compressor Frame 6 Cooler Frame A[a,b]

WATERBOX DESCRIPTION	PASSES	ENGLISH (lb)		METRIC (kg)	
		Cooler		Cooler	
		Frame A		Frame A	
		Standard Nozzles	Flanged	Standard Nozzles	Flanged
Dished Head, 150 psig	1	1006	1171	456	531
MWB End Cover, 150 psig	1	976	976	443	443
MWB End Cover (ASME), 300 psig	1	2460	2460	1116	1116
Dished Head, 150 psig	2	1140	1336	517	606
Dished Head (Return Cover), 150 psig	2	976	976	443	443
MWB End Cover, 150 psig	2	1068	1068	484	484
MWB End Cover (Return Cover), 150 psig	2	976	976	443	443
MWB End Cover (ASME), 300 psig	2	2460	2460	1116	1116
MWB End Cover (ASME) (Return Cover), 300 psig	2	2460	2460	1116	1116
Dished Head, 150 psig	3	1048	1112	475	504
MWB End Cover, 150 psig	3	1030	1030	467	467
MWB End Cover (ASME), 300 psig	3	2460	2460	1116	1116

NOTE(S):

a. Consult factory for 1 and 3 pass data.
b. Weights for dished head cover and MWB end cover 150 psig (1034 kPa) are included in the heat exchanger weights shown in the heat exchanger weight tables.

LEGEND

ASME — American Society of Mechanical Engineers
MWB — Marine Waterbox

Table 30 — 19XR Waterbox Cover Weights, Two-Stage Compressor Frame 6 Condenser Frame A and B[a,b]

WATERBOX DESCRIPTION	PASSES	ENGLISH (lb)				METRIC (kg)			
		Condenser				Condenser			
		Frame A		Frame B		Frame A		Frame B	
		Standard Nozzles	Flanged	Standard Nozzles	Flanged	Standard Nozzles	Flanged	Standard Nozzles	Flanged
Dished Head, 150 psig	1	895	1060	1006	1171	406	481	473	547
MWB, 150 psig	1	859	859	1075	1075	390	390	488	488
MWB (ASME), 300 psig	1	2117	2117	2744	2744	960	960	1292	1292
Dished Head, 150 psig	2	981	1179	1140	1400	445	535	574	633
Dished Head (Return Cover), 150 psig	2	824	824	976	976	374	374	481	481
MWB 150 psig	2	907	907	1075	1075	411	411	630	630
MWB (Return), 150 psig	2	824	824	976	976	374	411	488	488
MWB (ASME), 300 psig	2	2117	2117	2744	2744	960	1083	1440	1440
MWB Return Cover (ASME), 300 psig	2	2117	2117	2744	2744	960	960	1245	1245
Dished Head, 150 psig	3	1067	1157	1050	1140	484	525	476	517
MWB End Cover, 150 psig	3	942	942	1020	1020	427	427	463	463
MWB End Cover (ASME), 300 psig	3	2117	2177	2744	2744	960	987	1245	1245

NOTE(S):

a. Consult factory for 1 and 3 pass data.
b. Weights for dished head cover and MWB end cover 150 psig (1034 kPa) are included in the heat exchanger weights shown in the heat exchanger weight tables.

LEGEND

ASME — American Society of Mechanical Engineers
MWB — Marine Waterbox

Table 31 — 19XR Waterbox Cover Weights, Two-Stage Compressor Frame 7, Cooler Frames B, C[a,b]

WATERBOX DESCRIPTION	PASSES	ENGLISH (lb)				METRIC (kg)			
		Cooler				Cooler			
		Frame B		Frame C		Frame B		Frame C	
		Std Nozzles	Flanged	Std Nozzles	Flanged	Std Nozzles	Flanged	Std Nozzles	Flanged
Dished Head, 150 psig (1034 kPa)	1	1380	1545	1849	2014	626	701	839	914
MWB End Cover, 150 psig (1034 kPa)	1	1366	1366	1835	1835	620	620	832	832
MWB End Cover (ASME), 300 psig (2068 kPa)	1	3425	3425	4805	4805	1554	1554	2180	2180
Dished Head, 150 psig (1034 kPa)	2	1589	1849	2076	2336	721	839	942	1060
Dished Head (Return Cover), 150 psig (1034 kPa)	2	1367	1367	1836	1836	620	620	833	833
MWB End Cover, 150 psig (1034 kPa)	2	1489	1489	1987	1987	675	675	901	901
MWB (Return Cover), 150 psig (1034 kPa)	2	1367	1367	1836	1836	620	620	833	833
MWB End Cover (ASME), 300 psig (2068 kPa)	2	3425	3425	4805	4805	1554	1554	2180	2180
MWB (Return Cover), 300 psig (2068 kPa)	2	3425	3425	4805	4805	1554	1554	2180	2180
Dished Head, 150 psig (1034 kPa)	3	1514	1604	2028	2118	687	728	920	961
MWB End Cover, 150 psig (1034 kPa)	3	1506	1506	1995	1995	683	683	905	905
MWB End Cover (ASME), 300 psig (2068 kPa)	3	3425	3425	4805	4805	1554	1554	2180	2180

NOTE(S):

a. Consult factory for 1 and 3 pass data.
b. Weights for dished head cover and MWB end cover 150 psig (1034 kPa) are included in the heat exchanger weights shown in the heat exchanger weight tables.

LEGEND

ASME — American Society of Mechanical Engineers
MWB — Marine Waterbox
STD — Standard

Table 32 — 19XR Waterbox Cover Weights, Two-Stage Compressor Frame 7, Condenser Frames C, D[a,b]

WATERBOX DESCRIPTION	PASSES	ENGLISH (lb)				METRIC (kg)			
		Condenser				Condenser			
		Frame C		Frame D		Frame C		Frame D	
		Std Nozzles	Flanged	Std Nozzles	Flanged	Std Nozzles	Flanged	Std Nozzles	Flanged
Dished Head, 150 psig (1034 kPa)	1	1380	1600	1849	2029	626	726	839	920
MWB End Cover, 150 psig (1034 kPa)	1	1367	1367	1835	1835	620	620	832	832
MWB End Cover (ASME), 300 psig (2068 kPa)	1	3639	3639	5249	5249	1651	1651	2353	2353
Dished Head, 150 psig (1034 kPa)	2	1589	1919	2076	2406	721	870	942	1091
Dished Head (Return Cover), 150 psig (1034 kPa)	2	1367	1367	1836	1836	620	620	833	833
MWB End Cover, 150 psig (1034 kPa)	2	1497	1497	1988	1988	679	679	902	902
MWB (Return Cover), 150 psig (1034 kPa)	2	1367	1367	1836	1836	620	620	833	833
MWB End Cover (ASME), 300 psig (2068 kPa)	2	3639	3639	5249	5249	1651	1651	2381	2381
MWB (Return Cover) (ASME), 300 psig (2068 kPa)	2	3639	3639	5249	5249	1651	1651	2381	2381
Dished Head, 150 psig (1034 kPa)	3	1514	1612	2028	2126	687	731	920	964
MWB End Cover, 150 psig (1034 kPa)	3	1493	1493	1993	1993	677	677	904	904
MWB End Cover (ASME), 300 psig (2068 kPa)	3	3639	3639	5249	5249	1651	1651	2381	2381

NOTE(S):

a. Consult factory for 1 and 3 pass data.
b. Weights for dished head cover and MWB end cover 150 psig (1034 kPa) are included in the heat exchanger weights shown in the heat exchanger weight tables.

LEGEND

ASME — American Society of Mechanical Engineers
MWB — Marine Waterbox
STD — Standard

19XR2-E RIG MACHINE COMPONENTS

Refer to instructions below to disassemble a chiller with an LF2 442A or 608A VFD or Standard Tier VFD (DD558, DE658, DE745, DE800, DE880, DE990, 445, 485, 550, 605, 680A). Special instructions for chillers with a 900A or 1200A LF2 VFD or Standard Tier VFD (765, 855, 960, 1070, 1275, 1530A) start on page 45.

Disassemble a Chiller with a 442A or 608A LF2 VFD or Standard Tier VFD (DD558, DE658, DE745, DE800, DE880, DE990, 445, 485, 550, 605, 680A)

IMPORTANT: Only a qualified service technician should perform this operation.

⚠ WARNING

Do not attempt to disconnect flanges while the machine is under pressure. Failure to relieve pressure can result in personal injury or damage to the unit.

⚠ CAUTION

Before rigging the compressor, disconnect all wires entering the power panel to avoid unit damage.

Remove the VFD Enclosure

Confirm that the power supply disconnect is open and all safety procedures are observed before removing the VFD. This procedure minimizes the number of sensors and cables that need to be disconnected.

⚠ WARNING

Do not attempt to remove the VFD without first closing the refrigerant isolation valves. Failure to do so during VFD removal will result in an uncontrolled refrigerant leak. A refrigerant leak can damage the unit as well as displace oxygen, causing asphyxiation.

1. Close the 2 filter drier isolation valves and the VFD refrigerant drain isolation valve. Evacuate the VFD coldplate through the Schrader valve next to the filter/drier.
2. Remove any field wiring conduits that bring power to the VFD.
3. Remove the terminal box transition piece.
4. Label and disconnect the motor leads from the motor terminals. Note the position of the motor terminal cable lugs so they can be reinstalled with sufficient clearance away from the surrounding structure.
5. Remove the motor ground lead. Note the position of the ground lead so it can be reinstalled with sufficient clearance away from the surrounding structure.
6. Label and disconnect the power cables, interlock cable, and communication cable between the VFD enclosure and the power panel.
7. Remove the access panels on the back of the VFD enclosure and disconnect the VFD cooling lines. Cover all openings.

Lifting the VFD

Care should be used to prevent damage due to dropping or jolting when moving the VFD. A fork truck or similar means of lifting and transporting may be used. Sling the VFD in a manner that will equalize the load at the pickup joints. Use a spreader bar if the angle of the sling is less than 45 degrees relative to horizontal. Do not jolt while lifting.

Use the following procedure to lift the VFD:

1. Attach a sling to the four lifting holes in the lifting brackets (lifting brackets are factory-installed on top of the VFD enclosure). Make certain that the angle of the sling is not less than 45 degrees relative to horizontal.
2. Using an overhead or portable hoist (minimum 2 ton rated capacity), attach a free-fall chain to the sling secured to the drive. Take up any slack in the chain.
3. Rig the control center and remove the bolts that secure it to the VFD mounting brackets on the condenser. See Fig. 15.

NOTE: To reassemble, follow steps in reverse order. Connect sensors and cables after major components have been secured to reduce the risk of damaging them.

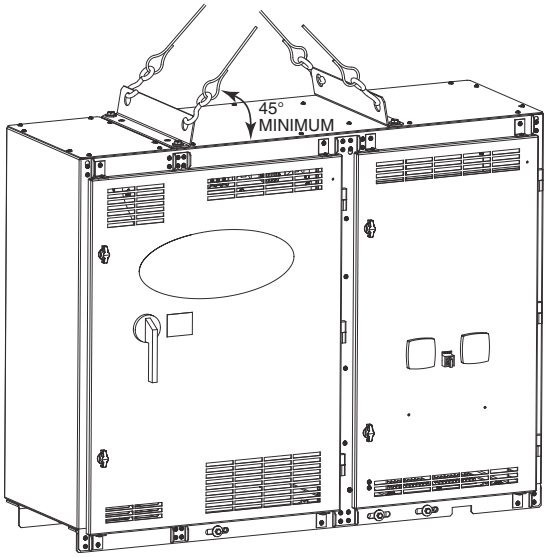

Fig. 15 — 442A and 608A LF2 VFD Enclosure Lifting Points

To Separate Cooler and Condenser

NOTE: If the cooler and condenser vessels must be separated, the heat exchangers should be kept level by placing a support plate under the tube sheets. The support plate will also help to keep the vessels level and aligned when the vessels are bolted back together.

Remove all transducer and sensor wires at the sensor. Clip all wire ties necessary to pull heat exchangers apart.

⚠ CAUTION

900A or 1200A LF2 VFD, Standard Tier VFD (DP1120, DP1260, DP1460, DP1670) — Do not separate the cooler and condenser until the VFD is removed. The VFD/condenser assembly has a high center of gravity and may tip over when the cooler and condenser are separated, which could result in equipment damage and/or serious personal injury. See page 45 for special instructions on VFD removal for these sizes.

1. Place a support plate under each tube sheet to keep each vessel level (Fig. 16, Item 4).
2. Cut the refrigerant motor cooling line at the location shown (Fig. 16, Item 2).
3. Disconnect the compressor discharge elbow at the compressor (Fig. 17, Item 6).
4. Unbolt the cooler liquid feed line at the location shown (Fig. 16, Item 8).
5. Cover all openings.

6. Disconnect all wires and cables that cross from the cooler side of the machine to the condenser side, including:
   a. temperature sensor cable at the waterbox (Fig. 18, Item 5)
   b. water-side transducer cables at the transducer (Fig. 18, Item 4)
   c. condenser transducer cable at the transducer (Fig. 17, Item 7)
   d. motor power wires at the motor terminal box (Fig. 16, Item 3)
   e. wires and cable housings at the power panel that cross from the VFD to the power panel (Fig. 17, Item 2).
7. Install dowel pins before separating the heat exchangers at the tube sheet mounting brackets to ensure accurate alignment when reassembling.
8. Disconnect the tube sheet mounting brackets on the tube sheets (Fig. 16, Item 5).
9. Rig the vessels apart.

To Separate Compressor from Cooler

1. Unbolt the compressor suction and discharge elbows (Fig. 16, Items 1 and 10).
2. Cut the refrigerant motor cooling line at the location shown (Fig. 16, Item 2).
3. Disconnect the motor refrigerant return line (Fig. 16, Item 6).
4. Disconnect the following:
   a. compressor oil sump temperature sensor cable (Fig. 19, Item 4)
   b. bearing temperature sensor cable (Fig. 19, Item 2)
   c. motor temperature sensor cable (Fig. 19, Item 1)
   d. wires and cable housings that cross from the power panel to VFD and control panel (Fig. 17, Item 2)
   e. discharge temperature sensor cable (Fig. 19, Item 6)
   f. compressor oil sump pressure cable (Fig. 19, Item 3)
   g. compressor oil discharge pressure cable (Fig. 19, Item 5)
   h. guide vane actuator cable (Fig. 17, Item 1)
   i. diffuser actuator cable (Frame 5 compressor and Frame 4 units with split ring diffuser — Fig. 18, Item 2)
   j. diffuser pressure cable (Frame 5 compressor and Frame 4 units with split ring diffuser — Fig. 19, Item 8).
5. Disconnect the flared fitting for the oil reclaim line (Fig. 16, Item 9).
6. Unbolt the compressor discharge elbow (Fig. 17, Item 6).
7. Cover all openings.
8. Disconnect motor power cables at the VFD lugs (Fig. 16, Item 3).
9. Install dowel pins between the compressor base and mounting base before separating from the cooler to ensure accurate alignment when reassembling.
10. Unbolt the compressor mounting from the cooler (Fig. 16, Item 7).
11. Rig the compressor.

To Rig Compressor

NOTE: The motor end of the 19XRV compressor is heavy and will tip backwards unless these directions are followed:

1. Cut two 4 in. x 6 in. wooden beams to the same length as the compressor.
2. Drill holes into the beams and bolt them to the base of the compressor using the compressor base mounting holes.

Additional Notes

1. Use O-ring lubricant on new O-rings when refitting.
2. Use gasket sealant on new gaskets when refitting.
3. Cooler and condenser vessels may be rigged vertically. Rigging should be fixed to the tube sheets of all 4 corners of the vessel.

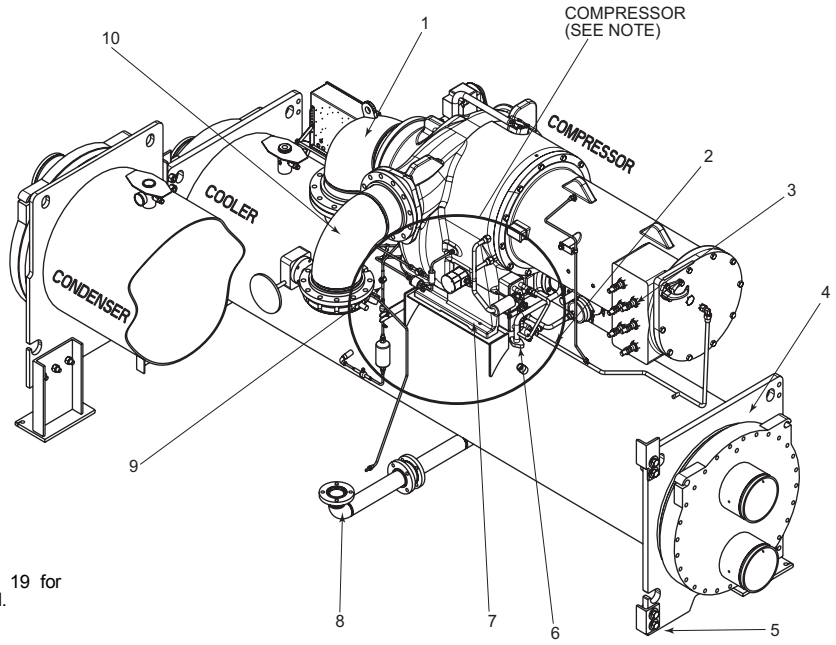

NOTE: See Fig. 19 for compressor detail.

1 — Compressor Suction Elbow (Unbolt)
2 — Motor Cooling Line (Cut)
3 — Motor Terminal Box (Unbolt)
4 — Tube Sheet
5 — Tube Sheet Mounting Brackets (Unbolt — 4 Places)
6 — Motor Cooling Drain Line (Unbolt)
7 — Compressor Mounting Bolt (Unbolt — 4 Places)
8 — Cooler Liquid Feed Line (Unbolt)
9 — Oil Reclaim Line (Unbolt)
10 — Compressor Discharge Elbow (Unbolt)

Fig. 16 — Cooler, Side View

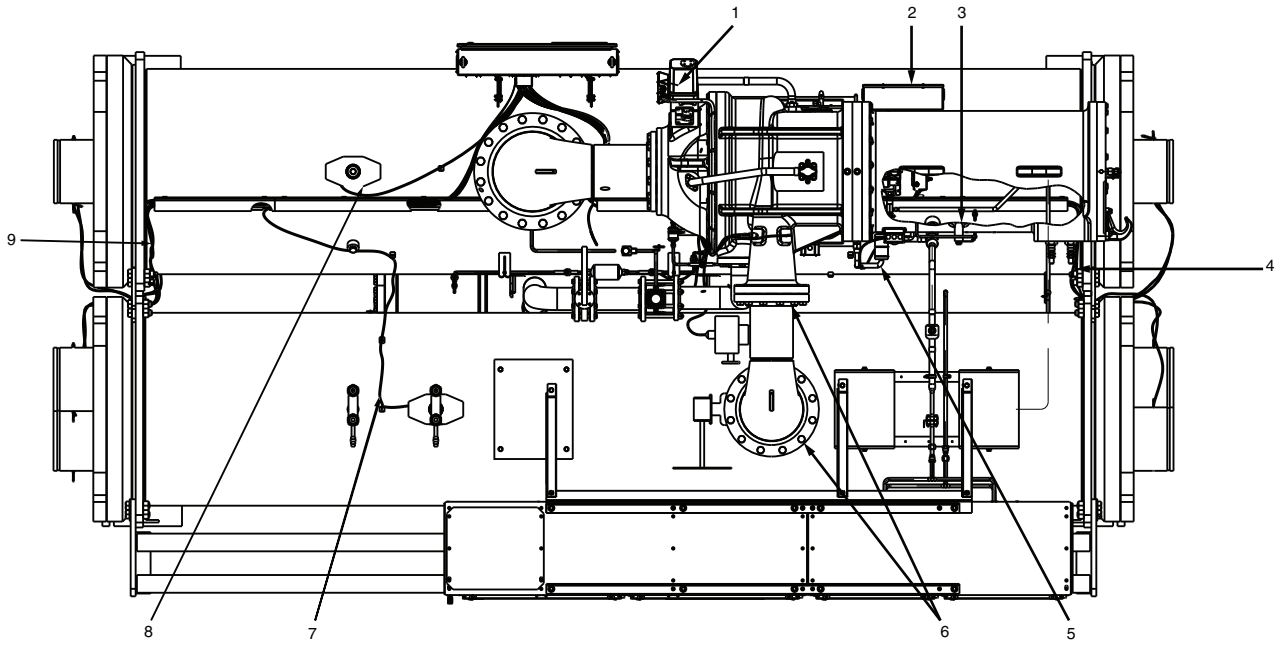

1 — Guide Vane Actuator Cable
2 — Power Panel
3 — Communication Cable
4 — Water Sensor Cables
5 — Motor Winding Temperature Cable
6 — Compressor Discharge Elbow Joints
7 — Condenser Pressure Cable
8 — Cooler Pressure Connection
9 — Water Sensor Cables

Fig. 17 — 19XRV Chiller Top View

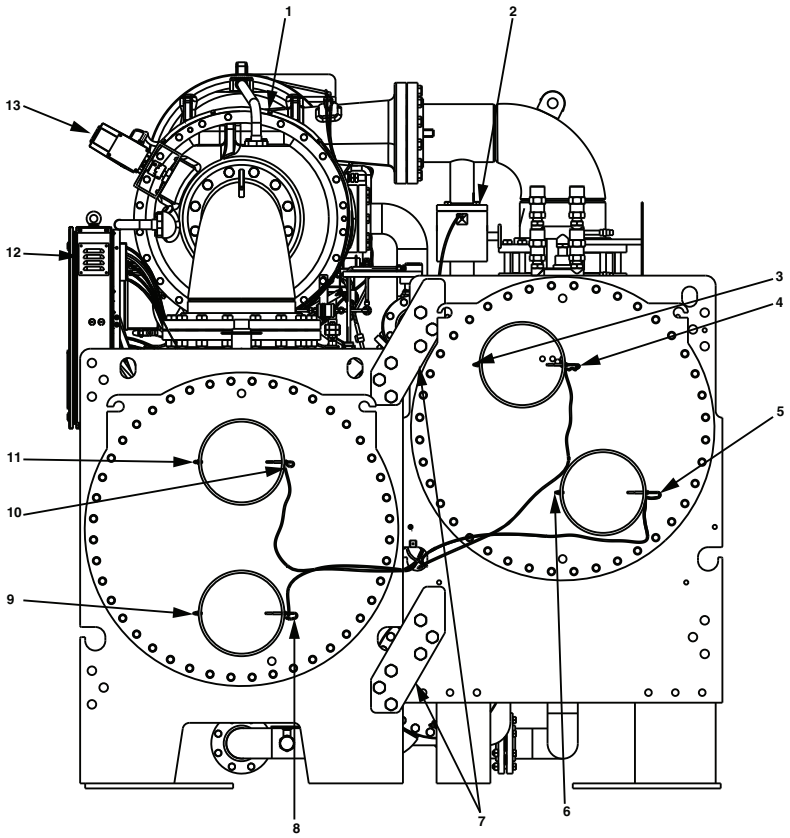

1 — Guide Vane Actuator Cables
2 — Hot Gas Bypass Line (Optional)
3 — Condenser Leaving Water Pressure Cable (Optional)
4 — Condenser Leaving Water Temperature Cable
5 — Condenser Entering Water Temperature Cable
6 — Condenser Entering Water Pressure Cable (Optional)
7 — Vessel Take-Apart Connectors
8 — Cooler Entering Water Temperature Cable
9 — Cooler Entering Water Pressure Cable (Optional)
10 — Cooler Leaving Water Temperature Cable
11 — Cooler Leaving Water Pressure Cable (Optional)
12 — Control Panel (PIC6)
13 — Guide Vane Actuator

Fig. 18 — Chiller End View

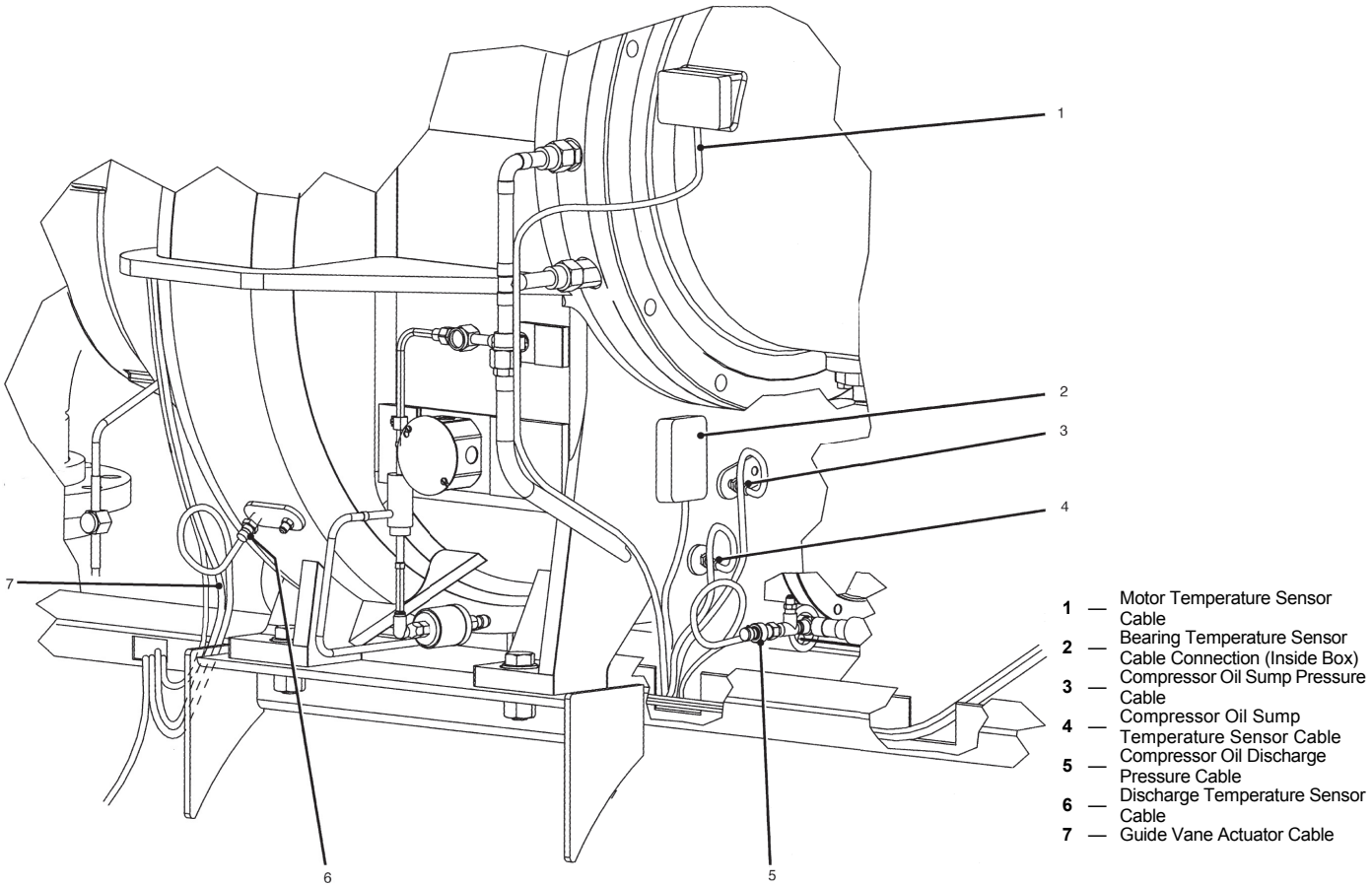

Fig. 19 — Compressor Detail

Special Instructions to Disassemble a Chiller with a 900A or 1200A LF2 VFD or Standard Tier VFD (DP1120, DP1260, DP1460, DP1670)

⚠ WARNING

Do not attempt to disconnect flanges while the machine is under pressure. Failure to relieve pressure can result in personal injury or damage to the unit.

NOTE: Label each wire before removal when wiring must be disconnected. Clip all wire ties necessary when removing pressure and temperature sensors. Disconnect all pressure transducer wires at the sensor. Temperature sensors cannot be disconnected from their cables; remove temperature sensors from their thermowells and label as required.

⚠ WARNING

900A or 1200A LF2 VFD, Standard Tier VFD (765, 855, 960, 1070, 1275, 1530A, DP1120, DP1260, DP1460, DP1670) — Do not separate the cooler and condenser until the VFD enclosure is removed. The VFD/cooler assembly has a high center of gravity and may tip over when the cooler and condenser are separated which could result in equipment damage and/or serious personal injury. See Fig. 20.

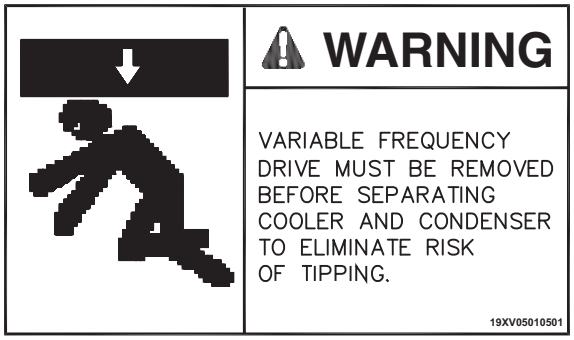

Fig. 20 — Removal Warning Label

Remove the VFD Enclosure from the Condenser

Confirm that the power supply disconnect is open and all safety procedures are observed before removing the VFD. This procedure minimizes the number of sensors and cables that need to be disconnected.

⚠ WARNING

Do not attempt to remove the VFD without first closing the VFD refrigerant isolation valves. Failure to do so during VFD removal will result in an uncontrolled refrigerant leak. A refrigerant leak can damage the unit as well as displace oxygen, causing asphyxiation.

1. Close the 2 filter drier isolation valves (Fig. 21) and the VFD refrigerant drain isolation valve. Evacuate the VFD coldplate through the Schrader valve (Fig. 21) next to the filter/drier.
2. Remove any conduits that bring power to VFD. See Fig. 21.

3. Remove the terminal box transition piece. See Fig. 21.
4. Label and disconnect the motor leads from the motor or VFD terminals (Fig. 22 and 23). Note the position of the motor terminal cable lugs so they can be reinstalled with sufficient clearance away from the surrounding structure. When reinstalling the VFD, assemble the back panel, floor, and tray of the motor terminal box transition piece prior to installing the motor leads.

⚠ CAUTION

Use a backing wrench when removing the nuts and bolts that secure the motor leads to the VFD bus bars to prevent damage to the bus bar insulators.

5. Remove the motor ground lead. Note the position of the ground lead so it can be reinstalled with sufficient clearance away from the surrounding structure.
6. Disconnect the power cables, interlock cable, and communication cable between the VFD enclosure and the power panel. See Fig. 21.
7. Remove the access panels on the back of the VFD enclosure and disconnect the VFD cooling lines (Fig. 24). Cover all openings.

Lifting the VFD

Care should be used to prevent damage due to dropping or jolting when moving the VFD enclosure. A fork truck or similar means of lifting and transporting may be used. Sling the VFD in a manner that will equalize the load at the pickup joints. Use a spreader bar if the angle of the sling is less than 45 degrees relative to the horizontal. Do not jolt while lifting.

NOTE: The two lifting brackets for the VFD are not installed when they are shipped. They are bolted upside down to the bottom of the VFD support shelf. They must be unbolted and installed on the top of the VFD enclosure with ten 1/2-13 x 1.25-inch-long grade 5 bolts.

Use the following procedure to lift the control center:

1. Attach a sling to the 4 lifting holes in the installed lifting brackets. Make certain that the angle of the sling is not less than 45 degrees relative to horizontal.
2. Using an overhead or portable hoist (minimum 2-ton rated capacity), attach a free-fall chain to the sling secured drive. Take up any slack in the chain. See Fig. 25.
3. The VFD support assembly can be removed from the condenser if it is necessary to reduce the width of the condenser assembly. The eight 1-1/8-7 bolts that secure the VFD support assembly to the tubesheets should be torqued to 750 ft-lb (1017 N-m) when the support assembly is reinstalled. See Fig. 26.

NOTE: To reassemble, follow steps in reverse order. Connect sensors and cables after major components have been secured to reduce the risk of damaging them.

NOTE: If overhead space is limited following reinstallation of the VFD enclosure, the VFD enclosure lifting brackets (Fig. 25) may be removed from the top of the VFD and fastened to the bottom of the VFD support shelf (Fig. 27).

Reinstall the 1/2-13 x 1.25-inch-long grade 5 bolts into the top of the VFD enclosure to prevent debris from falling into the VFD.

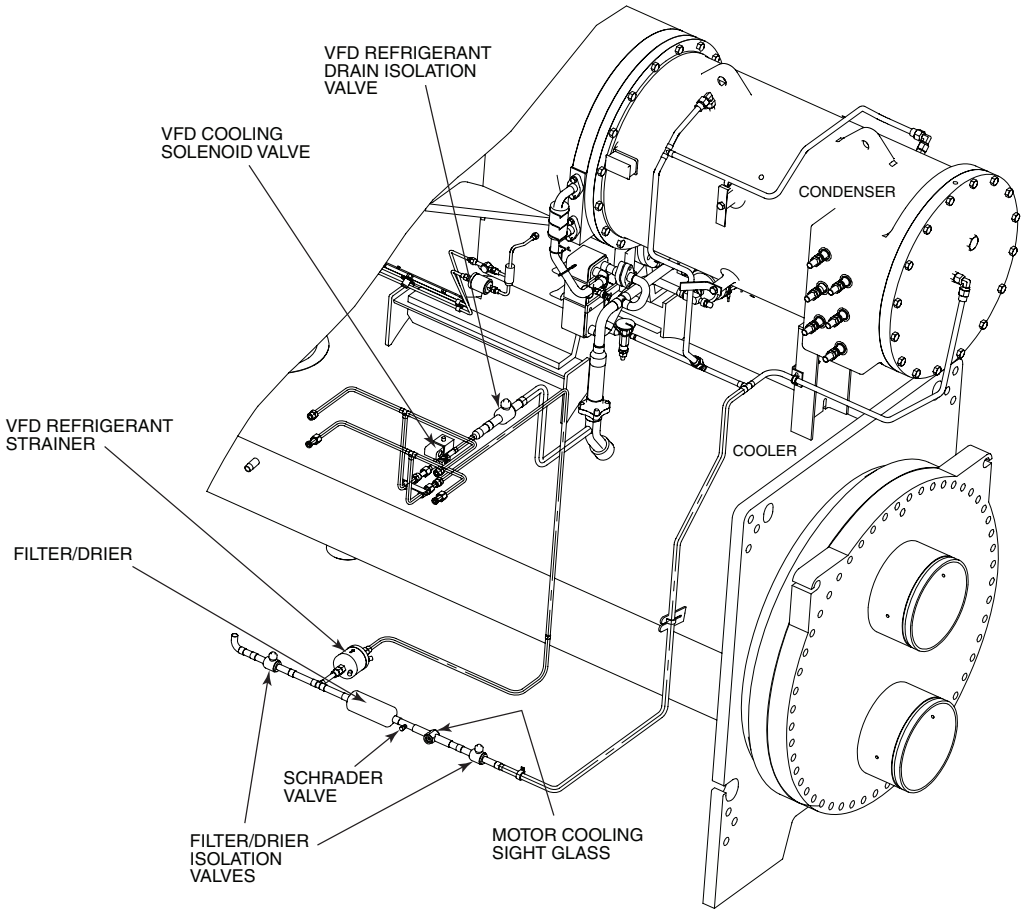

Fig. 21 — 900A or 1200A LF2 VFD — Typical

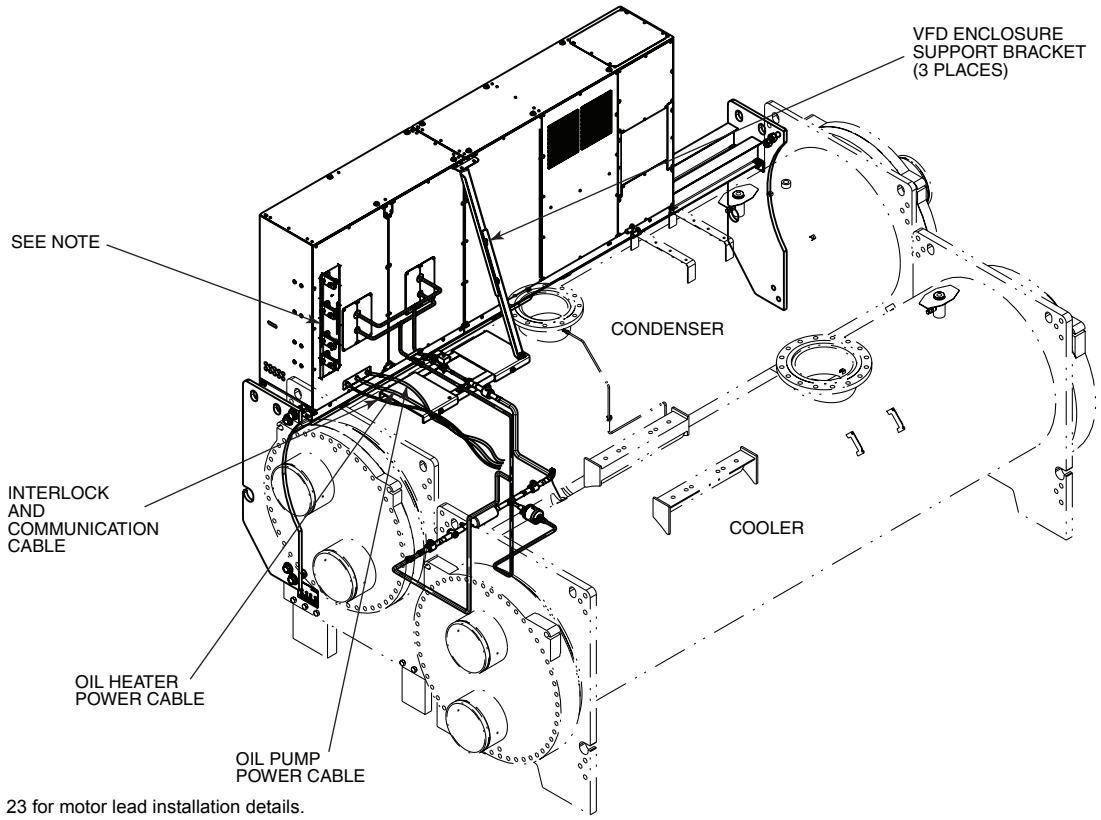

NOTE: See Fig. 23 for motor lead installation details.

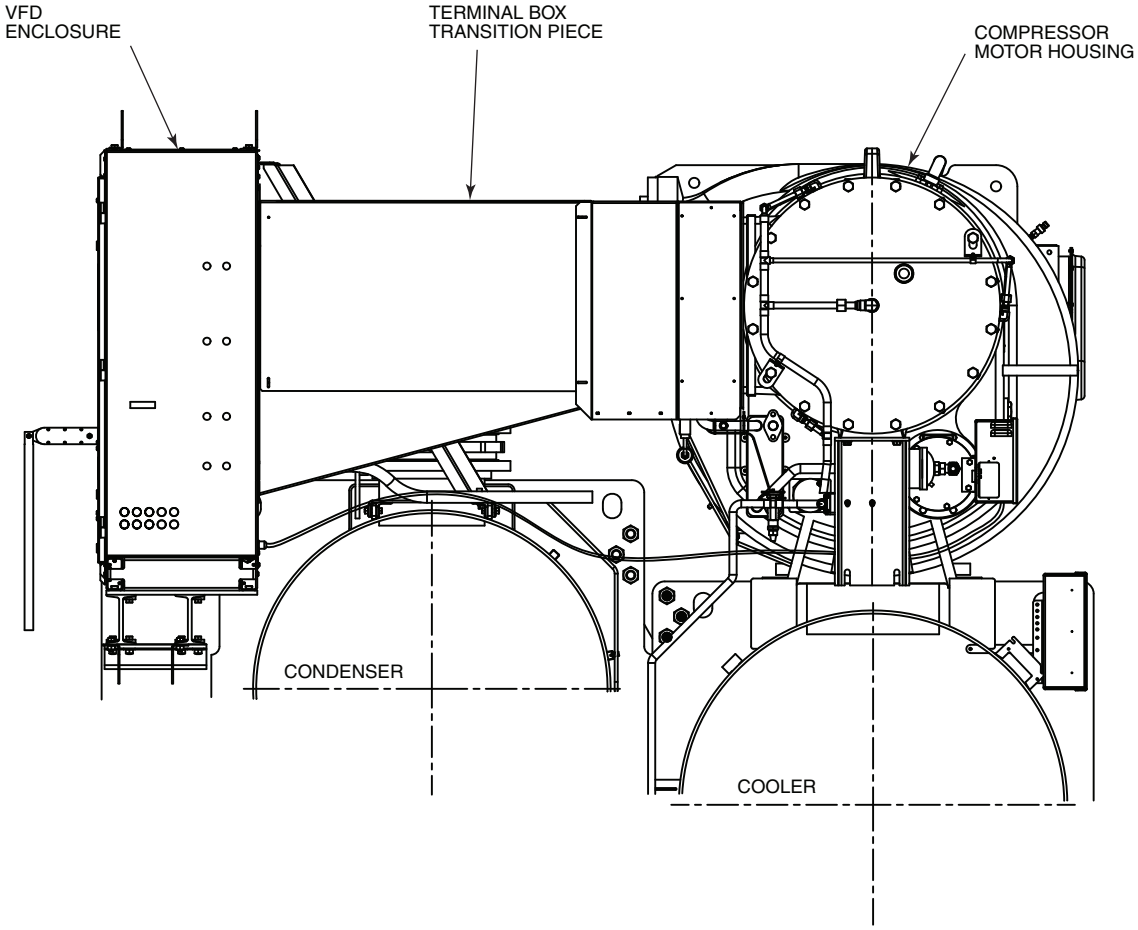

Fig. 21 — 900A or 1200A LF2 VFD — Typical (cont)

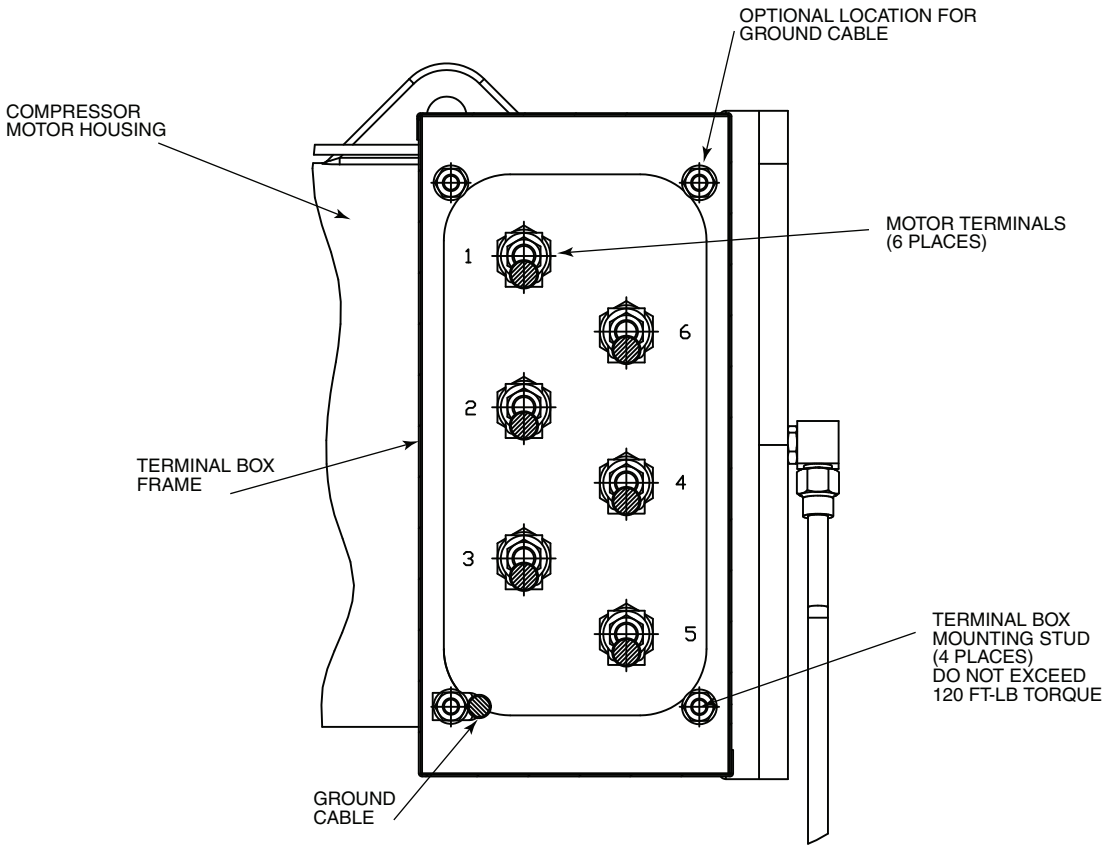

EXTERNAL VIEW

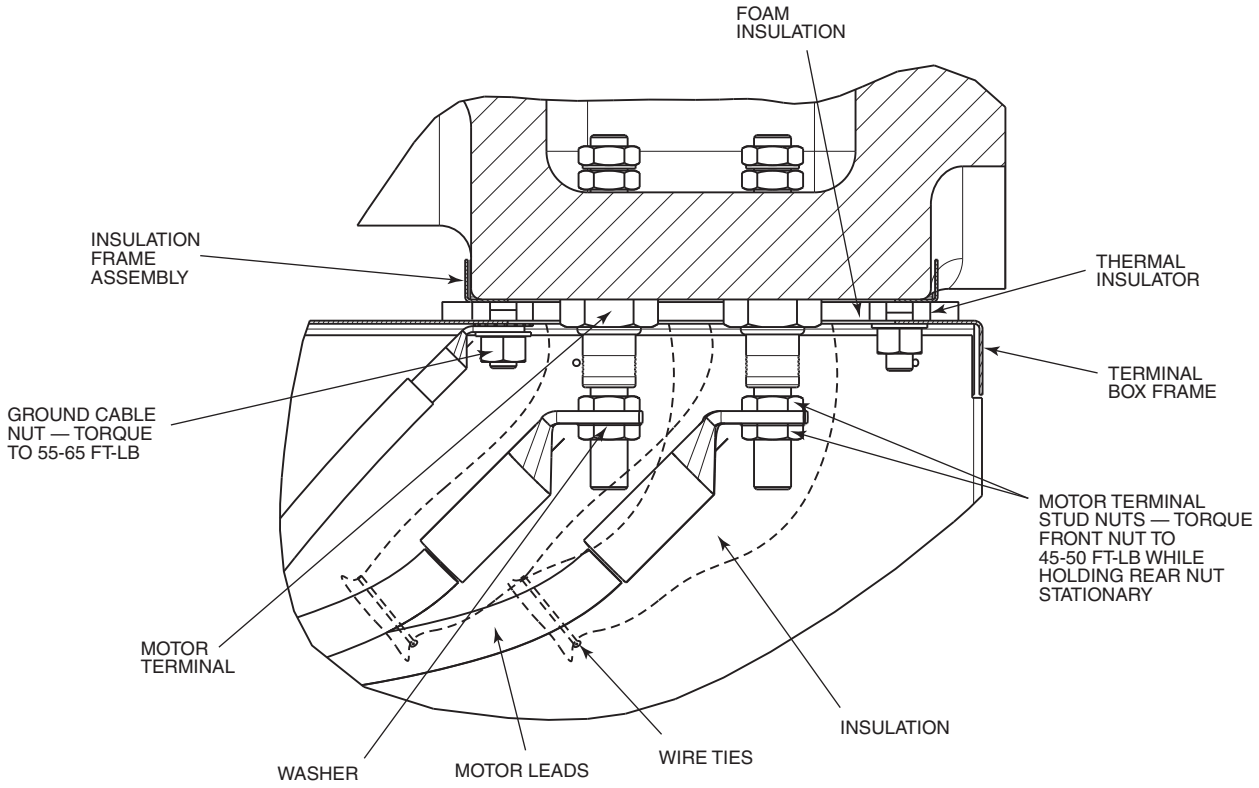

CROSS-SECTION VIEW

Fig. 22 — Compressor Motor Terminals (Typical)

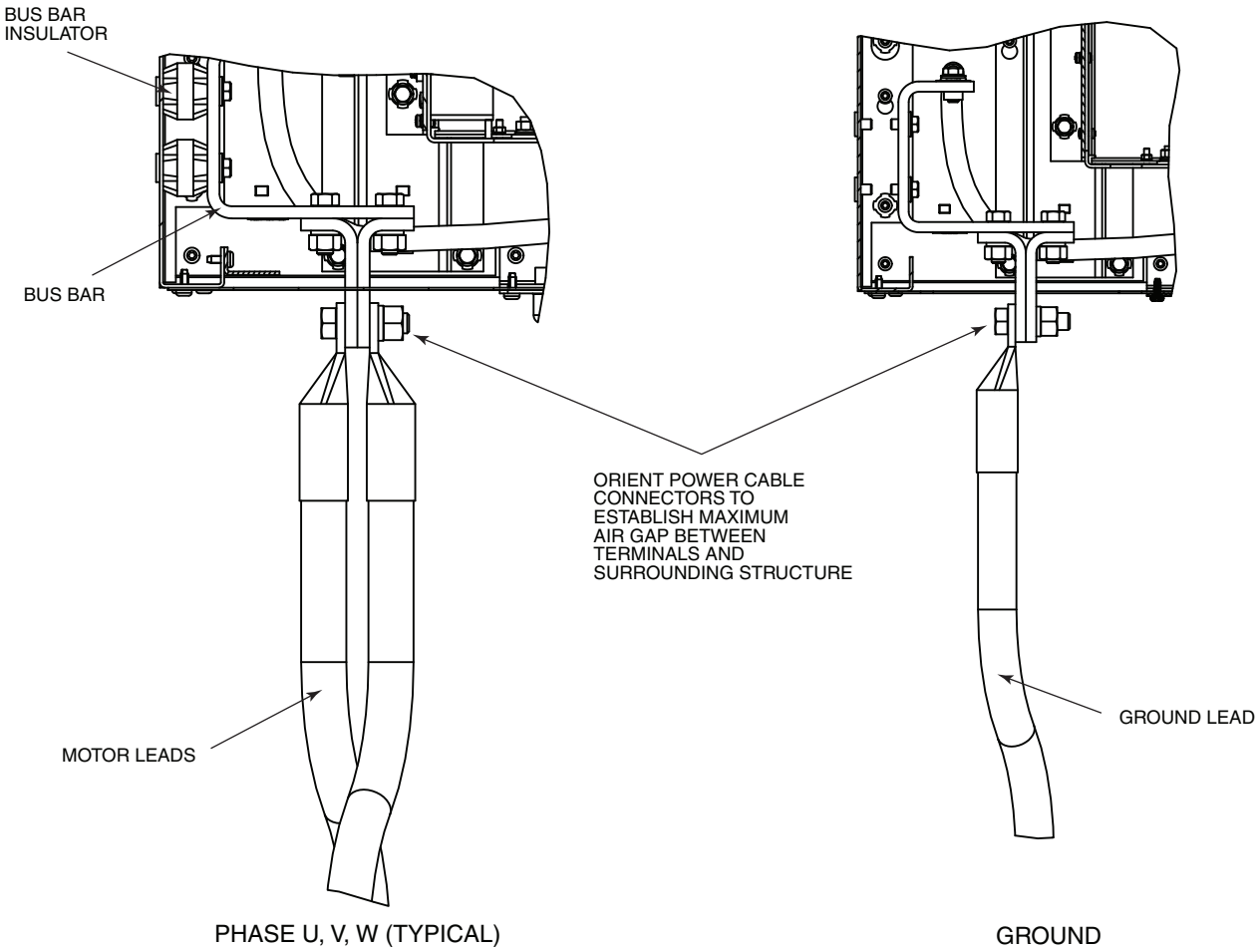

Fig. 23 — Motor Lead Installation (View Looking Down)

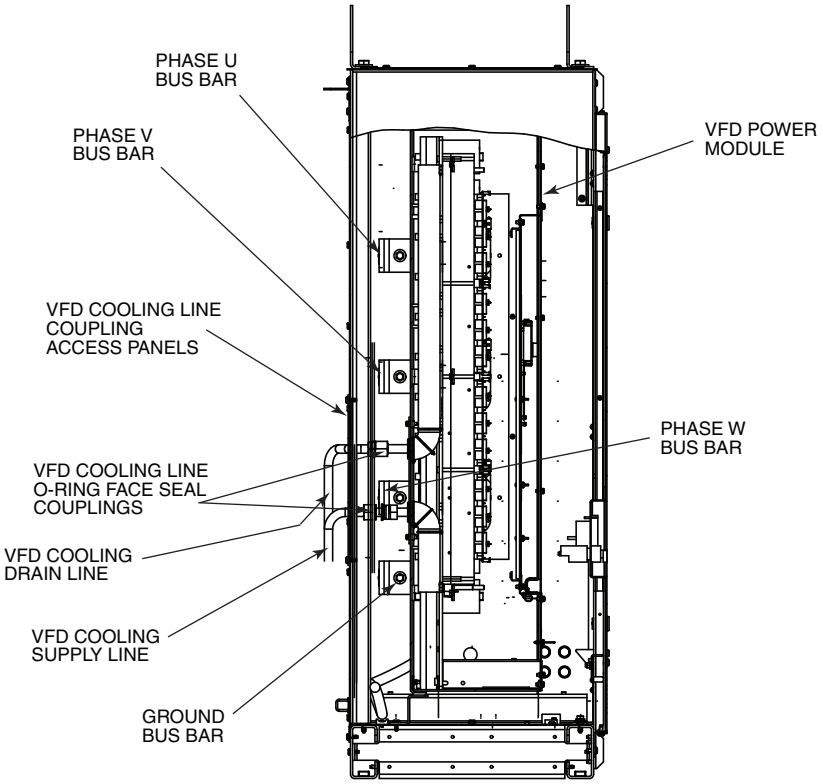

Fig. 24 — 900A or 1200A VFD Refrigerant Cooling Lines

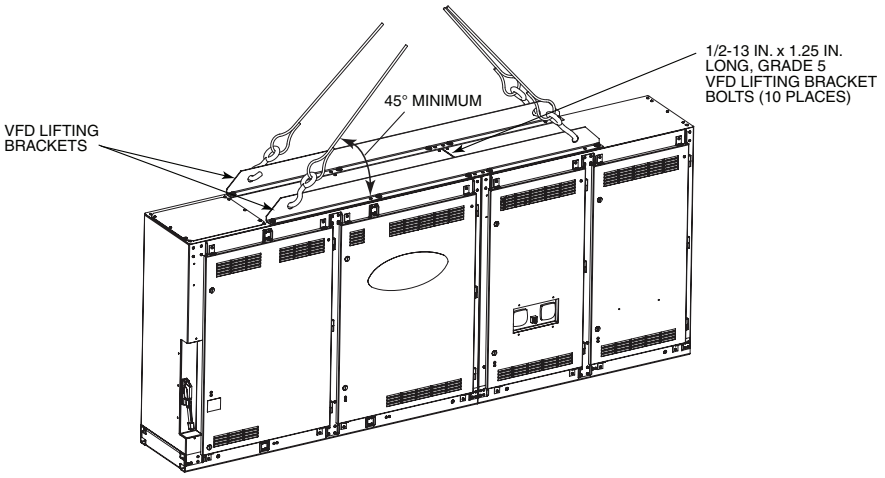

Fig. 25 — 900A or 1200A VFD Enclosure Lifting Points

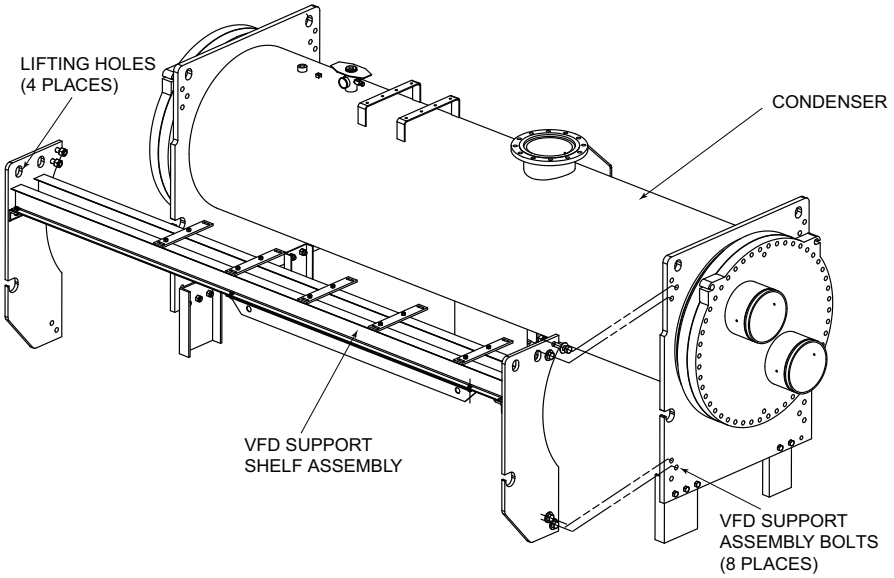

Fig. 26 — 900A or 1200A VFD Support Assembly Installation

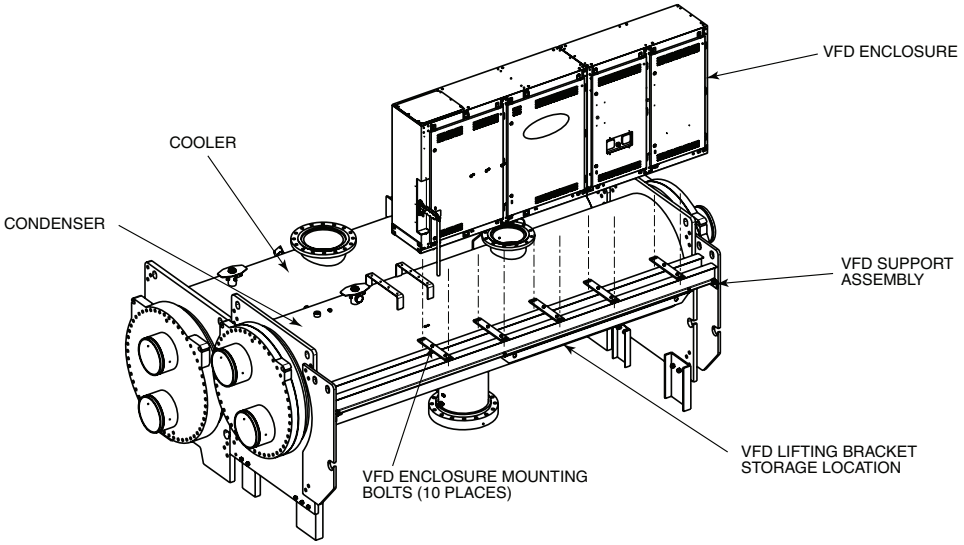

Fig. 27 — 900A or 1200A VFD Enclosure Installation

Install VFD

1. Install terminal box frame mounting studs into tapped holes using short threaded end. Do not exceed 120 ft-lb (163 N-m). See Fig. 22.
2. Install thermal insulators, insulation frame assembly, and terminal box frame prior to attaching motor power cables. Assemble the back panel, floor, and tray of the motor terminal box transition piece before installing the motor leads.
3. Tighten Frame 2 and Frame 3 motor terminals into the motor housing with 25 to 40 ft-lb (34 to 52 N-m) of torque.
4. There may be 1 or 2 motor power cables per terminal identified as T1, T2, and T3. Position motor end lugs on terminal studs with Belleville washer located against the front terminal lug with the convex side facing toward the front terminal nut. Clinch the two cables together with wire ties before tightening terminal nuts. Install front terminal nut finger tight. Hold rear terminal nut stationary while tightening front terminal nut to 45 to 50 ft-lb (61 to 68 N-m). See Fig. 22.
5. Check all terminal connections for proper installation.

IMPORTANT: Do not insulate terminals until wiring arrangement has been checked and approved by Carrier start-up personnel. Motor terminals must be insulated in acceptance with national and local electrical codes.

Insulate Motor Terminals and Lead Wire Ends

Locate heat shrink tubing (RCD P/N LF33MM114) over power connections so that they are completely covered and tubing is against motor housing. Shrink into position. Slide foam tubing (3 in. inner diameter closed cell vinyl, neoprene, or nitrile foam) partway over the heat shrink tubing. Apply adhesive for closed-cell foam insulation to motor-side end of the foam tubing, and push tubing the rest of the way over the terminal and against the sheet insulation on the motor side. Secure the opposite end of the foam tubing with a wire tie as shown in Fig. 22.

Alternate Insulation for Motor Terminals and Lead Wire Ends

Insulate compressor motor terminals, lead wire ends, and electrical wires to prevent moisture condensation and electrical arcing. Obtain Carrier-approved insulation material from RCD (Replacement Components Division), consisting of 3 rolls of insulation putty and one roll of vinyl tape.

a. Insulate each terminal by wrapping with one layer of insulation putty (RCD P/N 19EA411-1102).
b. Overwrap putty with 4 layers of vinyl tape.

6. Orient PE/ground lug as shown in Fig. 22. Assemble internal/external tooth lock washer between the terminal box frame and the PE/ground cable. Torque PE/ground lug nut to 55 to 65 ft-lb (75 to 89 N-m).
7. Complete assembly of the motor terminal box transition piece after all power and ground leads are installed. The motor terminal box transition piece must be adjusted to completely cover the opening on the back of the VFD enclosure. See Fig. 21.
8. Install O-rings on VFD refrigerant connections using silicone grease. Using two wrenches, tighten connector to 27 to 33 ft-lb (37 to 45 N-m). See Fig. 24.
9. Evacuate all piping between the VFD and the VFD isolation valves after assembly and tightening of VFD fittings. When dehydration/evacuation is complete, equalize VFD piping pressure with machine pressure if machine is charged with refrigerant. See Fig. 21.

19XR6/7 RIG MACHINE COMPONENTS

Refer to instructions below, Fig. 28-30, and Carrier Certified Prints for machine component disassembly.

IMPORTANT: Only a qualified service technician should perform this operation.

⚠ CAUTION

Freezing water can damage equipment. If machine can be or possibly has been exposed to freezing temperatures after water circuits have been installed, open waterbox drains and remove all water from cooler and condenser. Leave drains open until system is filled.

⚠ CAUTION

Before rigging the compressor, disconnect all wires connected to the control panel to avoid damage to electrical components.

NOTE: If the cooler, economizer, and condenser vessels must be separated, the heat exchangers should be kept level by placing a support plate under the tube sheets. The support plate will also help to keep the vessels level and aligned when the vessels are bolted back together.

NOTE: The compressor oil is hygroscopic and absorbs moisture from the atmosphere. Remove the oil charge from the compressor. Either dispose of compressor oil and reinstall a new oil charge after dehydration, or store oil in a clean dry container designed for oil storage; keep the container sealed until ready to re-install oil.

NOTE: Wiring must also be disconnected. Label each wire before removal (see Carrier Certified Prints). In order to disconnect the starter from the machine, remove wiring for the oil pump, oil heater, control wiring at the power panel, and the main motor leads at the starter lugs.

Remove all transducer and sensor wires at the sensor. Clip all wire ties necessary to pull heat exchangers apart.

To Separate Cooler and Condenser:

1. Place a support plate under each tube sheet leg to keep each vessel level (Item 3, Fig. 28).
2. Cut the refrigerant motor cooling line at the location shown (Item 4, Fig. 28).
3. Disconnect the compressor discharge pipe at the compressor (Item 14, Fig. 28).
4. Disconnect the coupling of the isolation valve near the damper valve as shown in Fig. 28 (Item 12).
5. Unbolt the cooler liquid feed line at the location indicated for liquid line isolation valve. Refer to Fig. 6 and 28, Item 8.
6. Cover all openings.
7. Disconnect all wires and cables that cross from the cooler side of the machine to the condenser side, including:
   a. temperature sensor cable at the waterbox (Fig. 30 and Fig. 31, Compressor Detail A).
   b. motor power wires at the starter (Item 1, Fig. 28).
   c. wires and cable housings at the control panel that cross from the control panel to the cooler vessel (Fig. 29).
8. Install dowel pins before separating the heat exchangers at the tube sheet mounting brackets to ensure accurate alignment when reassembling.
9. Disconnect the take-apart connectors on the tube sheets (Fig. 30).

10. Rig the vessels apart.

To Separate the Compressor from the Cooler:

1. Unbolt the compressor suction elbow at the cooler flange (Item 13, Fig. 28).
2. Cut the refrigerant motor cooling line at the location shown (Item 4, Fig. 28).
3. Disconnect the motor refrigerant return line (Item 6, Fig. 28).
4. Disconnect all wires going to the control panel.
5. Disconnect the following:
   a. compressor oil sump temperature sensor cable (Fig. 31, Compressor Detail B)
   b. bearing temperature sensor cables (Fig. 31, Compressor Detail B)
   c. motor temperature sensor cable (Fig. 31, Compressor Detail A)
   d. wires and cable housings that cross from the power panel to the starter and control panel (Fig. 29)
   e. compressor discharge temperature sensor cable (Fig. 31, Compressor Detail A)
   f. compressor oil sump pressure cable (Fig. 31, Compressor Detail B)
   g. compressor oil supply pressure cable (Fig. 31, Compressor Detail A)
   h. bearing displacement switch (Fig. 31, Compressor Detail D)
   i. oil heater (Fig. 31, Compressor Detail B).
   j. guide vane actuator cable (Fig. 31, Compressor Detail D)
6. Disconnect the flared fitting for the oil reclaim line (Item 11, Fig. 28).
7. Unbolt the compressor discharge coupling (Item 14, Fig. 28).
8. Cover all openings.
9. Disconnect motor power cables at the starter lugs (Item 1, Fig. 28).
10. Install dowel pins between the compressor base and mounting base before separating from the cooler to ensure accurate alignment when reassembling.
11. Unbolt the compressor mounting from the cooler (Item 7, Fig. 28).

To Rig Compressor:

NOTE: The motor end of the 19XR compressor is heavy and will tip backwards unless these directions are followed:

1. Cut two 6 in. x 8 in. wooden beams to the same length as the compressor.
2. Drill holes into the beams and bolt them to the base of the compressor.

Additional Notes

1. Use silicone grease on new O-rings when refitting.
2. Use gasket sealant on new gaskets when refitting.
3. Cooler and condenser vessels may be rigged vertically. Rigging should be fixed to all 4 corners of the tube sheet.

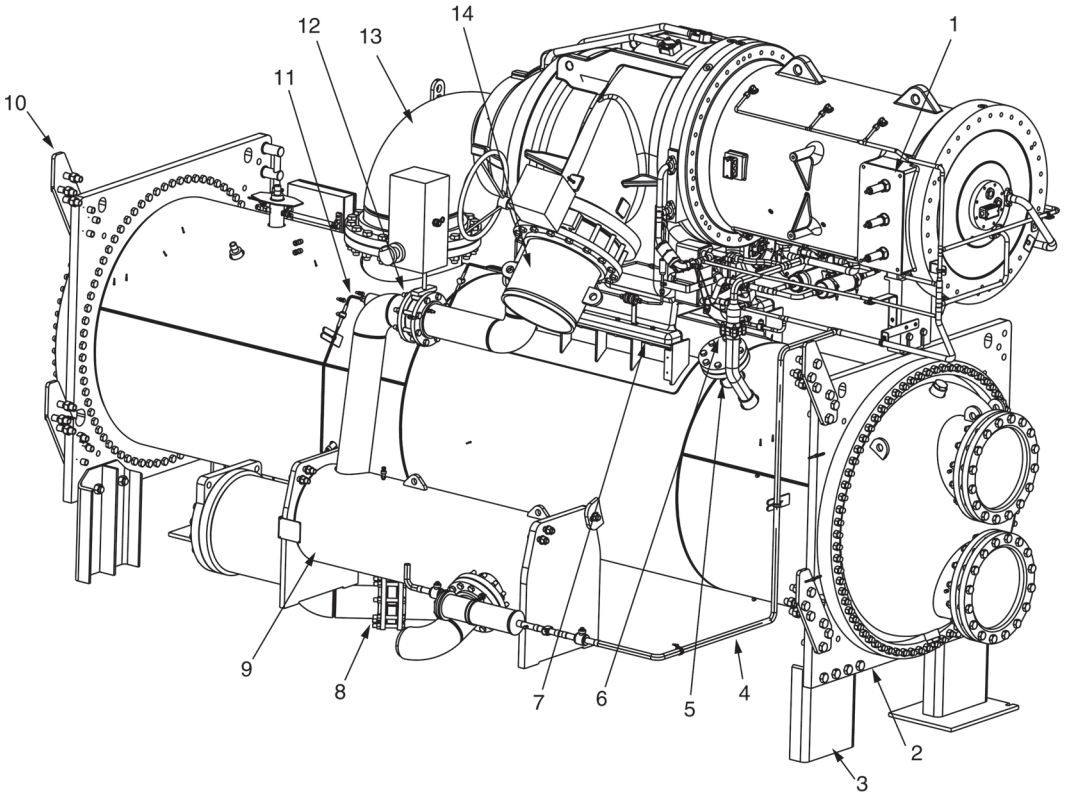

1 — Starter Connector (Unbolt)
2 — Tube Sheet
3 — Tube Sheet Leg Option (Unbolt)
4 — Refrigerant Motor Cooling Line (Cut)
5 — Optional Hot Gas Bypass (Unbolt)
6 — Motor Drain
7 — Compressor Mounting
8 — Cooler Liquid Feed Line
9 — Economizer
10 — Vessel Connectors (Unbolt)
11 — Oil Reclaim Line
12 — Refrigerant Isolation Valve
13 — Compressor Suction Elbow
14 — Compressor Discharge Pipe

Fig. 28 — Cooler, Side View (Compressor Frame Size 6 Shown), 19XR6/7

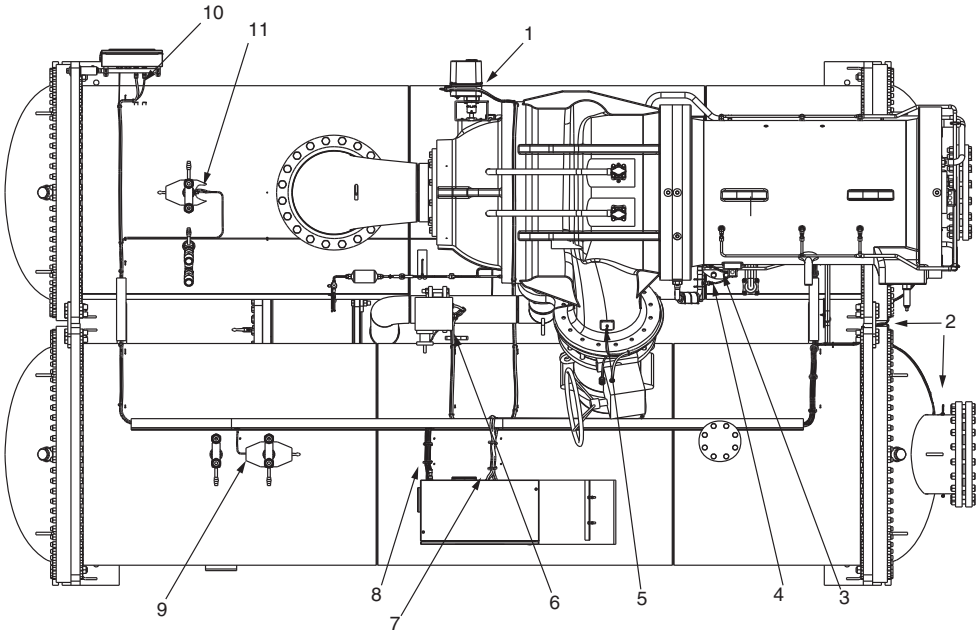

1 — Guide Vane Actuator Cable
2 — Water Temperature Sensor Cables
3 — Motor Winding Temperature Cables
4 — Compressor Oil Supply Pressure Cable
5 — Compressor Discharge Temperature Sensor Cable
6 — Damper Valve Cables
7 — Control Panel Power Supply Cables
8 — Low Voltage Sensor Cables
9 — Condenser Pressure Cable
10 — HMI Communications and Power Supply Cables
11 — Cooler Pressure Cable

Fig. 29 — Chiller Top View (Compressor Frame Size 6 Shown), 19XR6/7

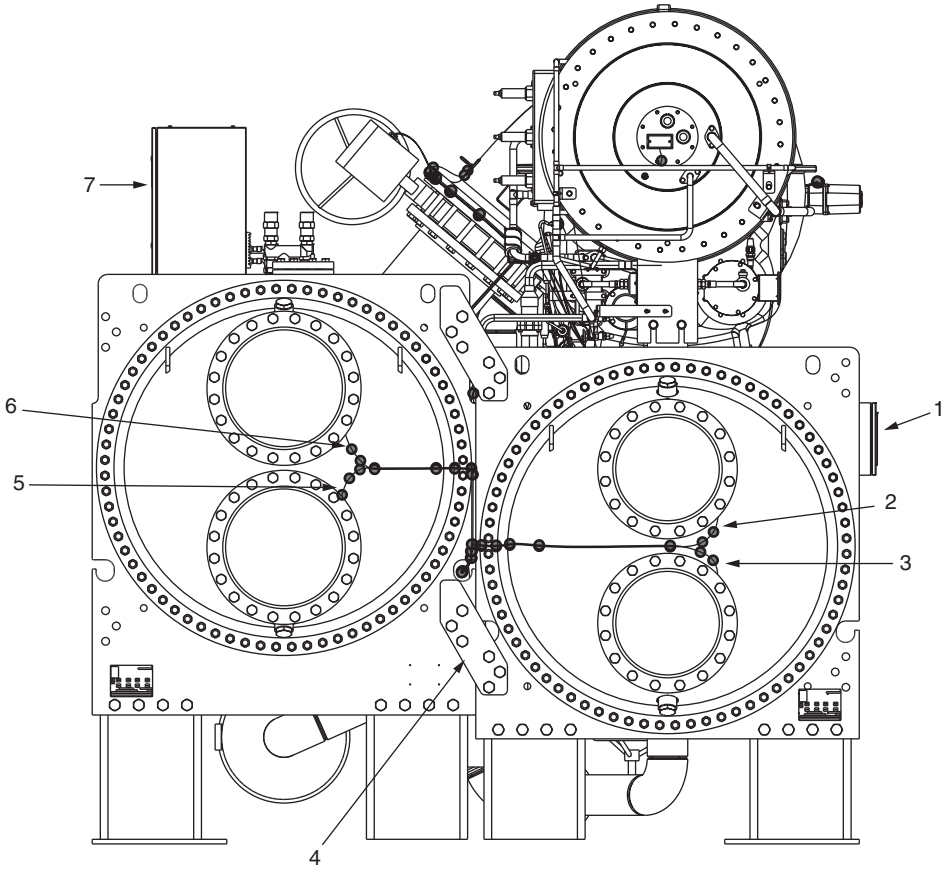

1 — HMI Control Box
2 — Cooler Leaving Water Temperature Cable
3 — Cooler Entering Water Temperature Cable
4 — Vessel Take-Apart Connectors
5 — Condenser Entering Water Temperature Cable
6 — Condenser Leaving Water Temperature Cable
7 — Control Box

Fig. 30 — Chiller End View

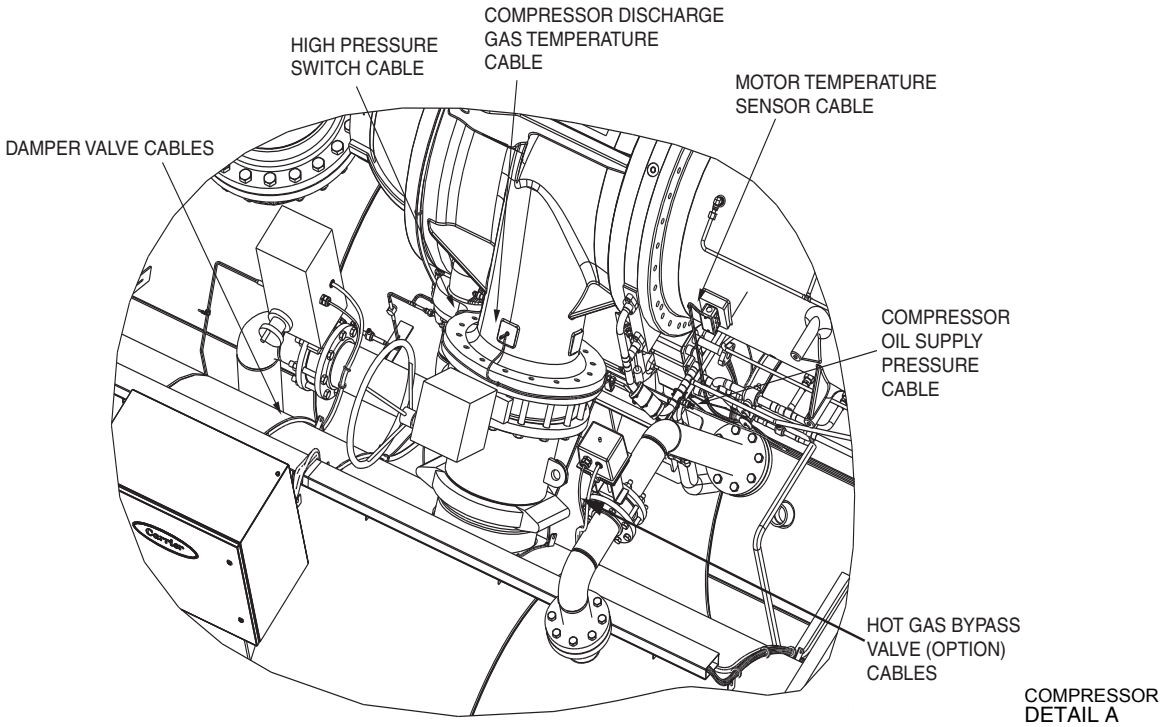

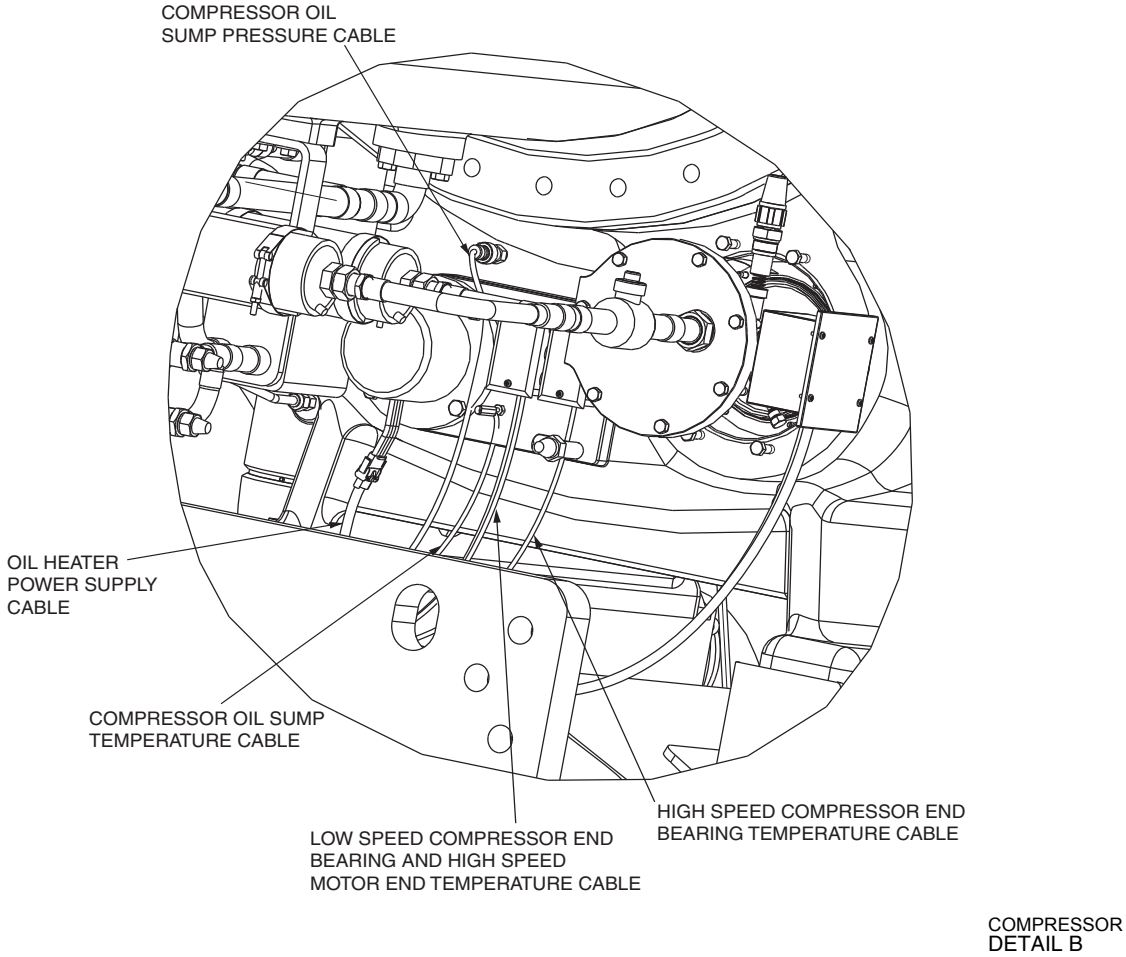

Fig. 31 — 19XR6/7 Compressor Detail

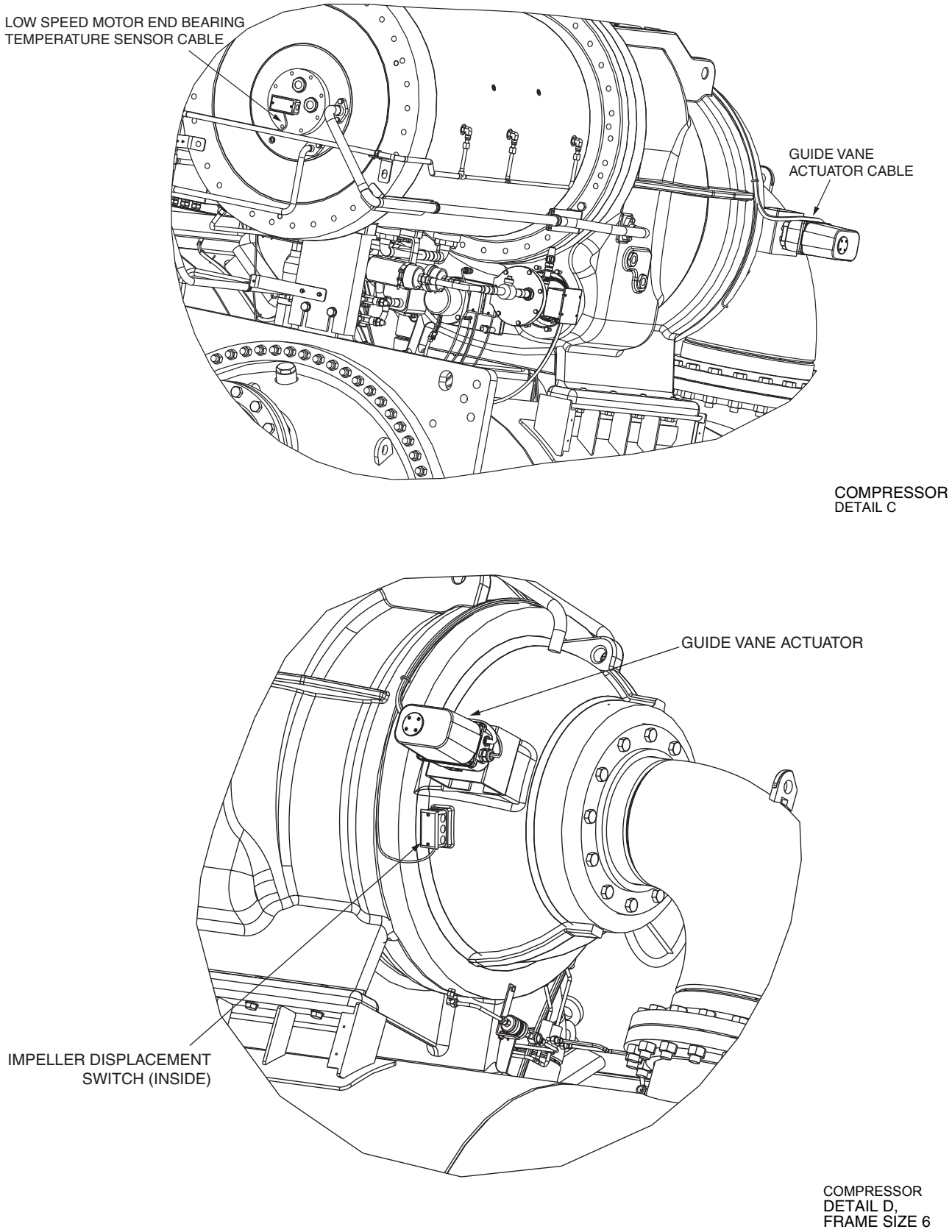

Fig. 31 — 19XR6/7 Compressor Detail (cont)

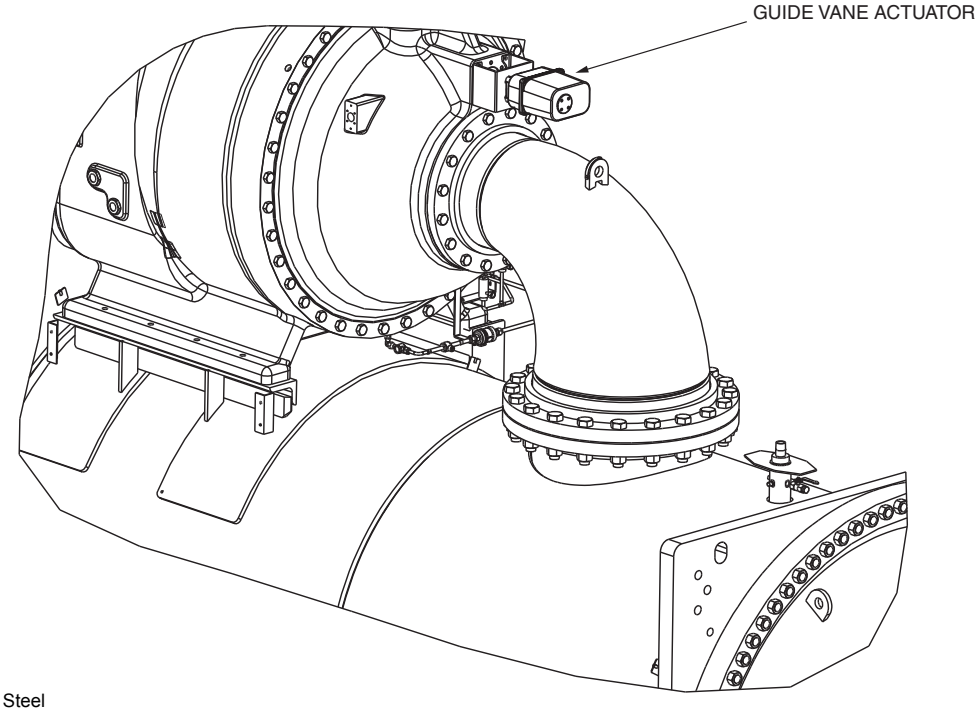

LEGEND
HRS — Hot Rolled Steel

COMPRESSOR
DETAIL D,
FRAME SIZE 7

Fig. 31 — 19XR6/7 Compressor Detail (cont)

Step 3 — Install Machine Supports

INSTALL STANDARD ISOLATION

Figures 32 and 33 show positions of support plates and shear flex pads, which together form the standard machine support system.

IMPORTANT: Chiller housekeeping pad, anchor bolts, and attachment points that are designed by others must be in accordance with all applicable national and local codes.

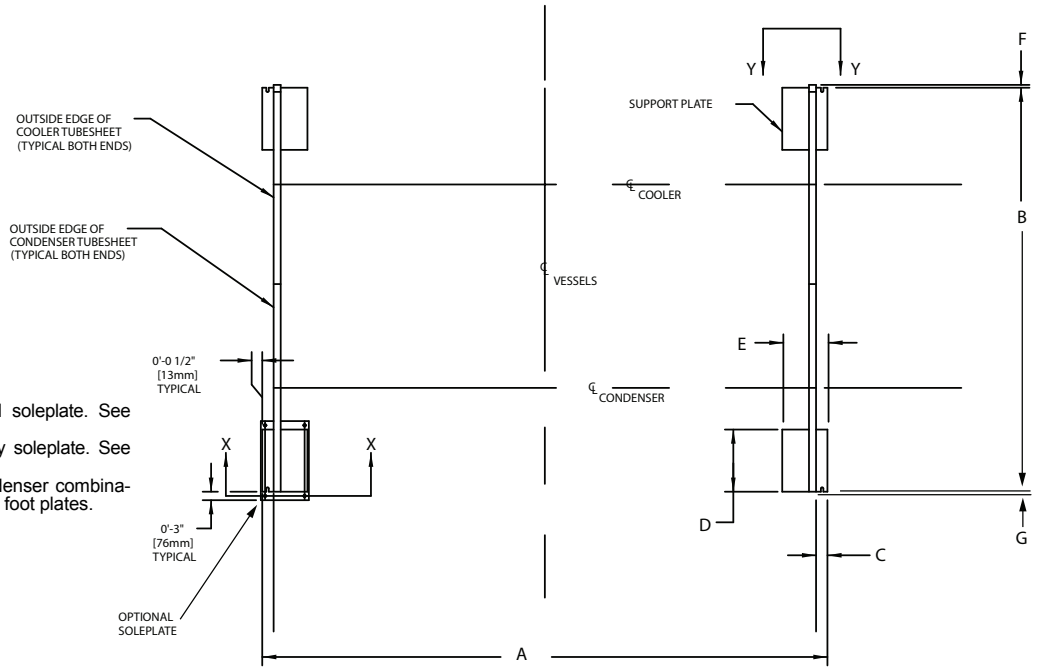

NOTES:
1. Y-Y dimension refers to standard soleplate. See Fig. 33.
2. X-X dimension refers to accessory soleplate. See Fig. 34.
3. For B6/C6 and C6/C6 cooler/condenser combinations, the tubesheet overhangs the foot plates.

19XRV HEAT EXCHANGER SIZE	DIMENSIONS													
	A		B		C		D		E		F		G	
	ft-in.	mm	ft-in.	mm	ft-in.	mm	ft-in.	mm	ft-in.	mm	ft-in.	mm	ft-in.	mm
20-22	10-7-1/4	3232	5-4-1/4	1632	0-1	25	0-3-5/8	92	1-3-1/4	387	0-9	229	0-1/2	13
30-32	12-10-3/4	3931	5-5-1/4	1657	0	0	0-3-5/8	92	1-3-1/4	387	0-9	229	0-1/2	13
35-37	14-7-1/4	4451	5-5-1/4	1657	0	0	0-3-5/8	92	1-3-1/4	387	0-9	229	0-1/2	13
40-42	12-10-3/4	3931	6-0	1829	0-1-1/2	38	0-3-5/8	92	1-3-1/4	387	0-9	229	0-1/2	13
45-47	14-7-1/4	4451	6-0	1829	0-1-1/2	38	0-3-5/8	92	1-3-1/4	387	0-9	229	0-1/2	13
50-54, 5A-5C, 5K-5R	12-10-3/4	3931	6-5-1/2	1969	0-1/2	13	0-3-5/8	92	1-3-1/4	387	0-9	229	0-1/2	13
55-59, 5F-5H, 5T-5Z	14-7-1/4	4451	6-5-1/2	1969	0-1/2	13	0-3-5/8	92	1-3-1/4	387	0-9	229	0-1/2	13
60-64, 6K-6R	12-10-3/4	3931	6-9-1/2	2070	0-1/2	13	0-3-5/8	92	1-3-1/4	387	0-9	229	0-1/2	13
65-69, 6T-6Z	14-7-1/4	4451	6-9-1/2	2070	0-1/2	13	0-3-5/8	92	1-3-1/4	387	0-9	229	0-1/2	13
70-74, 7K-7R	15-1-7/8	4620	7-10-1/2	2401	0-1/4	6	0-6-15/16	176	1-10	559	1-4	406	0-3/4	19
75-79, 7T-7Z	17-1-7/8	5230	7-10-1/2	2401	0-1/4	6	0-6-15/16	176	1-10	559	1-4	406	0-3/4	19
80-84, 8K-8R	15-1-7/8	4620	8-9-3/4	2686	0-15/16	24	0-6-15/16	176	1-10	559	1-4	406	0-1/16	2
85-89, 8T-8Z	17-1-7/8	5230	8-9-3/4	2686	0-15/16	24	0-6-15/16	176	1-10	559	1-4	406	0-1/16	2
A4	14-8-7/8	4492	10-0-1/8	3051	0-4-7/16	113	1-10	559	1-4	406	—	—	—	—
B4	14-8-7/8	4492	10-5-3/8	3177	0-4-7/16	113	1-10	559	1-4	406	—	—	—	—
A6	16-8-7/8	5102	10-0-1/8	3051	0-4-7/16	113	1-10	559	1-4	406	—	—	—	—
B6	16-8-7/8	5102	10-5-3/8	3177	0-4-7/16	113	1-10	559	1-4	406	—	—	—	—
C6	16-8	5080	11-11	3632	0-4	102	1-10	559	1-4	406	—	—	0-1	25
C8	18-8	5690	11-11	3632	0-4	102	1-10	559	1-4	406	—	—	0-1	25
C6	16-8	5080	12-4-1/2	3662	0-4	102	1-10	559	1-4	406	—	—	0-1	25
D6	16-8	5080	13-2	4013	0-4	102	1-10	559	1-4	406	—	—	—	—
C8	18-8	5691	13-2	4013	0-4	102	1-10	559	1-4	406	—	—	—	—
D8	18-8	5691	13-2	4013	0-4	102	1-10	559	1-4	406	—	—	—	—

Fig. 32 — 19XR Machine Footprint

NOTES:
1. Dimensions in ( ) are in millimeters.
2. Isolation package includes 4 elastomeric pads.

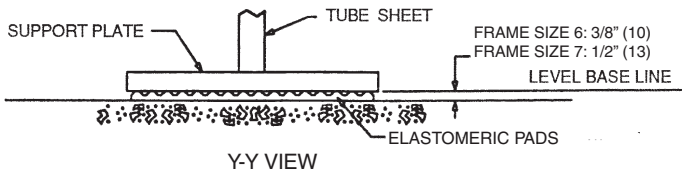

Fig. 33 — Standard Isolation

INSTALL ACCESSORY ISOLATION (IF REQUIRED)

Uneven floors or other considerations may dictate the use of accessory soleplates (supplied by Carrier for field installation) and leveling pads. Refer to Fig. 34.

Level machine by using jacking screws in isolation soleplates. Use a level at least 24 in. (600 mm) long.

For adequate and long lasting machine support, proper grout selection and placement is essential. Carrier recommends that only pre-mixed, epoxy type, non-shrinking grout be used for machine installation. Follow manufacturer's instructions in applying grout.

1. Check machine location prints for required grout thickness.
2. Carefully wax jacking screws for easy removal from grout.
3. Grout must extend above the base of the soleplate and there must be no voids in grout beneath the plates.
4. Allow grout to set and harden, per manufacturer's instructions, before starting machine.
5. Remove jacking screws from leveling pads after grout has hardened.

SOLEPLATE DIMENSIONS

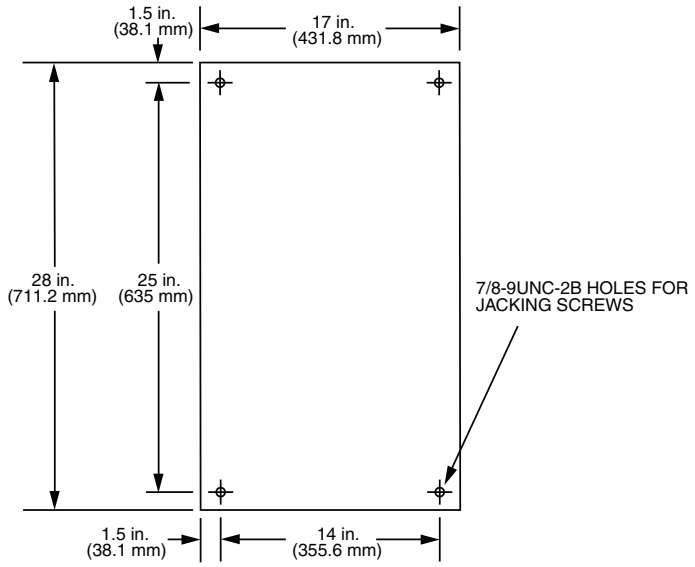

ACCESSORY SOLEPLATE DETAIL

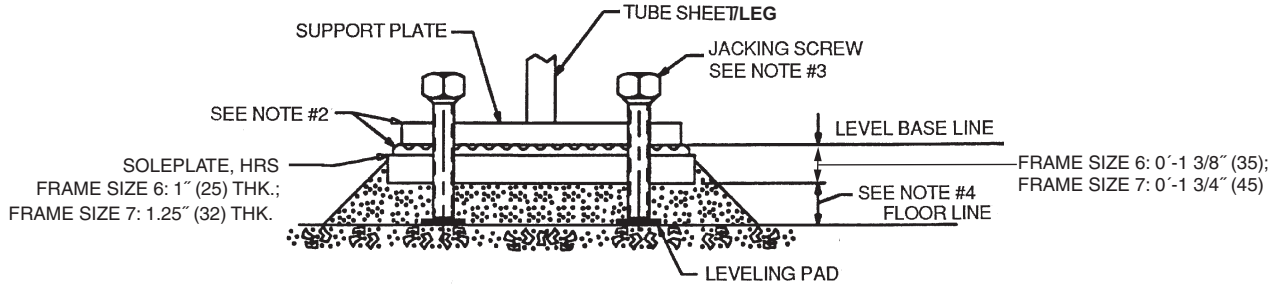

X-X VIEW

NOTES:
1. Dimensions in ( ) are in millimeters.
2. Accessory (Carrier supplied, field installed) soleplate package includes 4 soleplates, 16 jacking screws and leveling pads. Isolation package is also required.
3. Jacking screws to be removed after grout has set.
4. Thickness of grout will vary, depending on the amount necessary to level chiller. Use only pre-mixed non-shrinking grout, MasterFlow[1] 885, 1-1/2 in. (38.1 mm) to 2-1/4 in. (57.2 mm) thick.

1.Third-party trademarks and logos are the property of their respective owners.

Fig. 34 — Accessory Isolation

INSTALL SPRING ISOLATION

Spring isolation may be purchased as an accessory from Carrier for field installation. It may also be field supplied and installed. Spring isolators may be placed directly under machine support plates. See Fig. 35. Consult job data for specific arrangement. Low profile spring isolation assemblies can be field supplied to keep the machine at a convenient working height.

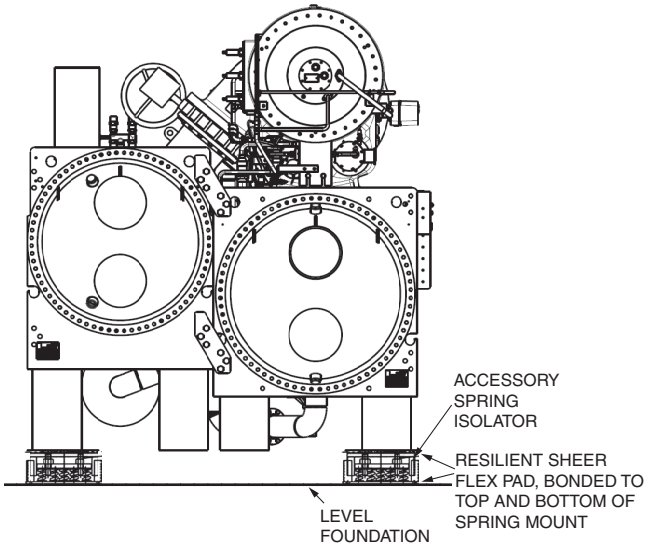

NOTE: The accessory spring isolators are supplied by Carrier for installation in the field if the accessory is purchased.

Fig. 35 — 19XR Accessory Spring Isolation (Shown with Accessory Soleplates)

Obtain specific details on spring mounting and machine weight distribution from job data. Also, check job data for methods to support and isolate pipes that are attached to spring isolated machines.

NOTE: It is recommended that any installation other than the ground floor should have spring isolation for the chiller and piping vibration isolation.

NOTE: These isolators are not intended for seismic duty, but are intended to reduce the vibration and noise levels transmitted from the chiller to the surrounding environment. For installations adjacent to areas that are sensitive to noise and/or vibration, use the services of a qualified consulting engineer or acoustics expert to determine whether these springs will provide adequate noise/vibration suppression.

Step 4 — Connect Piping

INSTALL WATER PIPING TO HEAT EXCHANGERS

⚠ CAUTION

Factory-supplied insulation is not flammable but can be damaged by welding sparks and open flame. Protect insulation with a wet canvas cover.

⚠ CAUTION

To prevent damage to sensors, remove cooler and condenser water temperature sensors before welding connecting piping to water nozzles. Refer to Fig. 30. Replace sensors after welding is complete.

⚠ CAUTION

When flushing the water systems, isolate the chiller from the water circuits to prevent damage to the heat exchanger tubes.

1. Offset pipe flanges to permit removal of waterbox cover for maintenance and to provide clearance for pipe cleaning. No flanges are necessary with marine waterbox option; however, water piping should not cross in front of the waterbox or compressor because service access will be blocked.
2. Provide openings in water piping for required pressure gages and thermometers. For thorough mixing and temperature stabilization, wells in the leaving water pipe should extend inside pipe at least 2 in. (50 mm).
3. Install air vents at all high points in piping to remove air and prevent water hammer.
4. Field-installed piping must be arranged and supported to avoid stress on the equipment and transmission of vibration from the equipment. Piping must be installed to prevent interference with routine access for the reading, adjusting, and servicing of the equipment. Provisions should be made for adjusting the piping in each plane for periodic and major servicing of the equipment.
5. See Fig. 36 for typical nozzle piping. Water flow direction must be as specified in Fig. 37-39.

   NOTE: Entering water is always the lower of the 2 nozzles. Leaving water is always the upper nozzle for cooler or condenser.
6. Install waterbox vent and drain piping in accordance with individual job data. Consult certified drawings for connection size.
7. Install waterbox drain plugs in the unused waterbox drains and vent openings.
8. Install optional pumpout system as shown in Fig. 40 and 41. See Tables 33 and 34 for dimensions.
9. Isolation valves are recommended on the cooler and condenser piping to each chiller for service.
10. Apply appropriate torque on the retaining bolts in a crisscross pattern for water box covers before insulating the water box cover. The gasket can relax during transportation and storage and the water box cover requires retightening of the bolts.

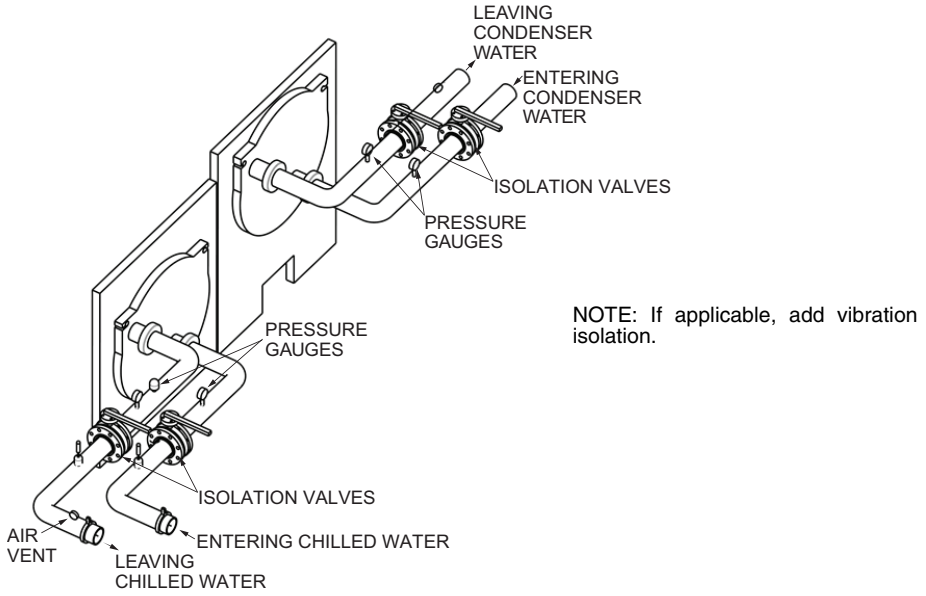

NOTE: If applicable, add vibration isolation.

Fig. 36 — Typical Nozzle Piping

NOZZLE-IN-HEAD (NIH) WATERBOXES

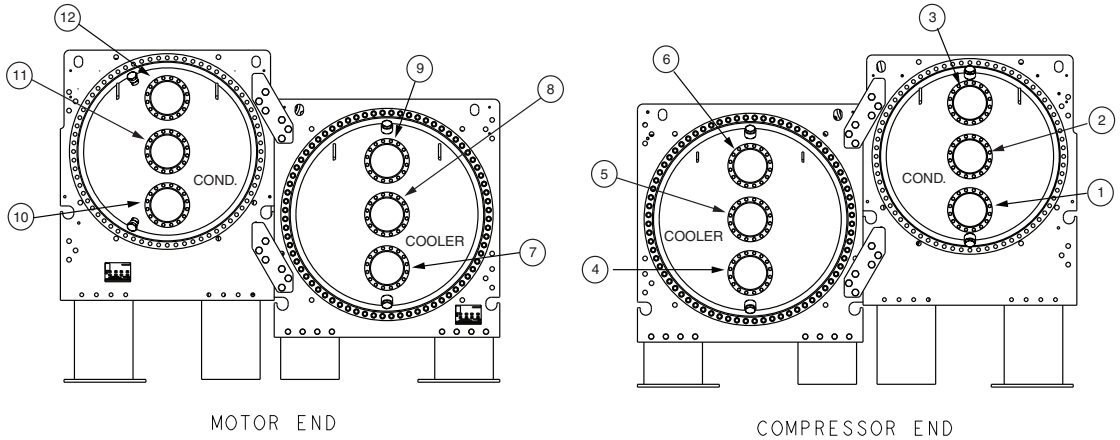

NOZZLE ARRANGEMENT CODES

PASS	COOLER WATERBOXES			CONDENSER WATERBOXES		
	In	Out	Arrangement Code[a]	In	Out	Arrangement Code*
1	8	5	A	11	2	P
	5	8	B	2	11	Q
2	7	9	C	10	12	R
	4	6	D	1	3	S
3	7	6	E	10	3	T
	4	9	F	1	12	U

NOTE(S):

a. Refer to certified drawings.

Fig. 37 — 19XR Frame 1-8 (19XR2-E) and A-D (19XR6-7) Piping Flow Data (NIH)

MARINE WATERBOXES (MWB)

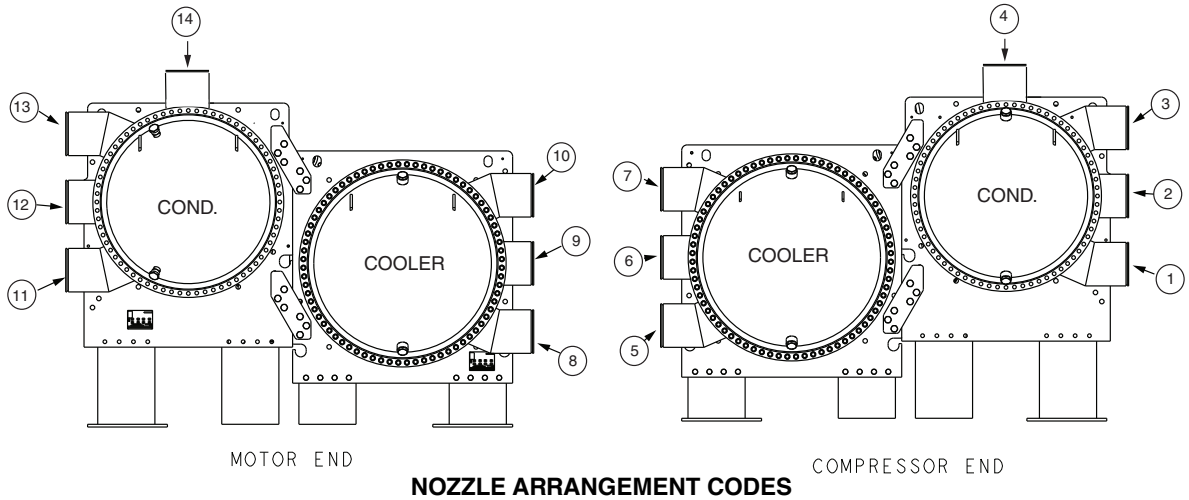

NOZZLE ARRANGEMENT CODES

COOLER MARINE WATERBOXES			
PASS	**In**	**Out**	**Arrangement Code***
1	9	6	A
	6	9	B
2	8	10	C
	5	7	D
3	8	7	E
	5	10	F

CONDENSER MARINE WATERBOXES			
PASS	**In**	**Out**	**Arrangement Code***
1	12	2	P
	2	12	Q
2	11	13	R
	1	3	S
	11	14	V
	1	4	W

*Refer to certified drawings. Note that not all nozzle arrangements are available as standard.

Fig. 38 — 19XR Frame 1-8 (19XR2-E) and A-D (19XR6-7) (MWB)

MARINE WATERBOXES (MWB)

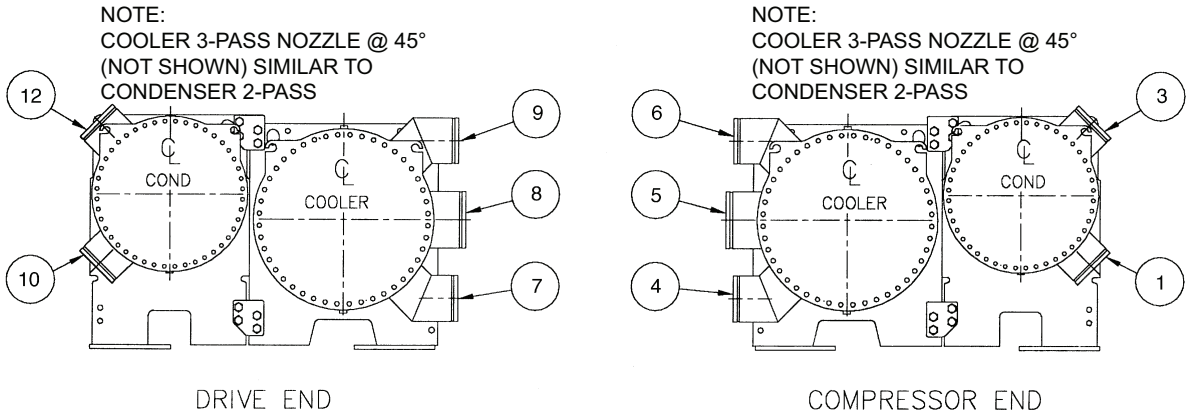

FRAMES 2 AND 3
NOZZLE ARRANGEMENT CODES

PASS	COOLER WATERBOXES			CONDENSER WATERBOXES		
	IN	**OUT**	**ARRANGEMENT CODE**	**IN**	**OUT**	**ARRANGEMENT CODE**
1	8	5	A	—	—	—
	5	8	B	—	—	—
2	7	9	C	10	12	R
	4	6	D	1	3	S
3	7	6	E	—	—	—
	4	9	F	—	—	—

Fig. 39 — 19XR Frame 2-3 (19XR2-3) Piping Flow Data (MWB)

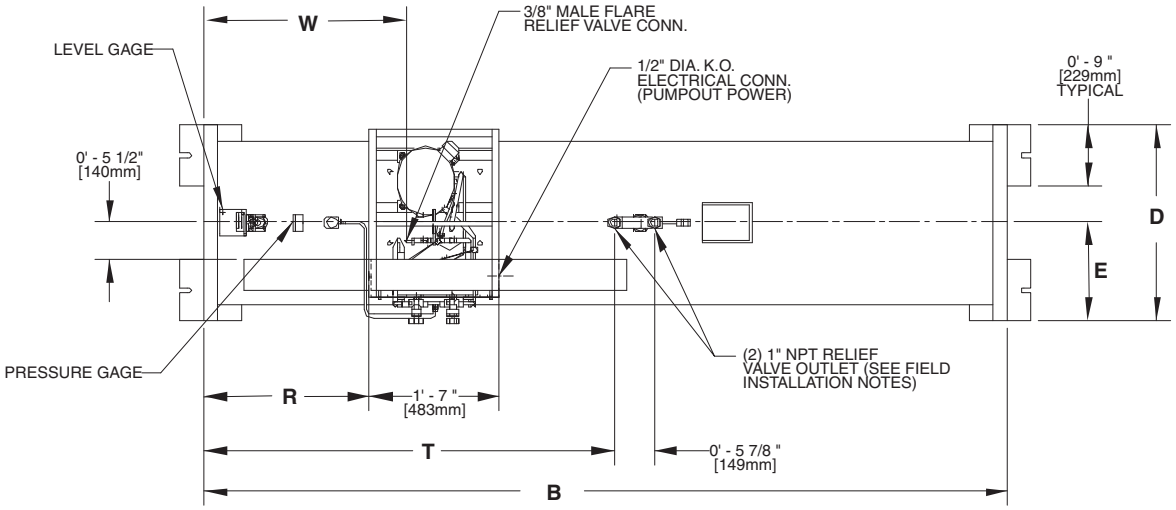

TOP VIEW

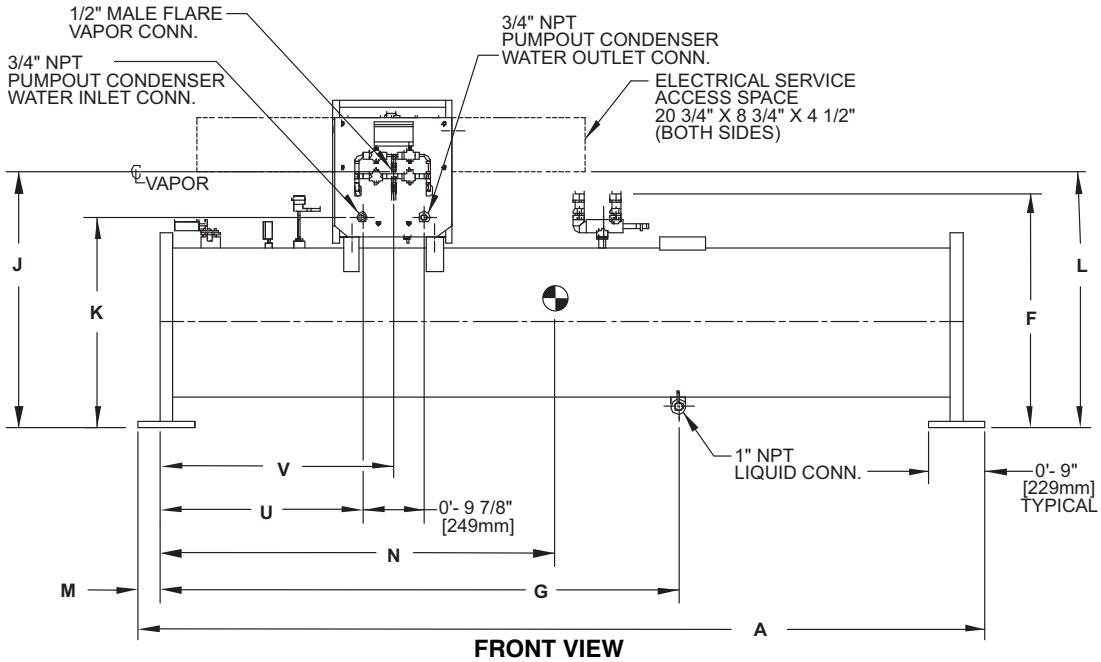

FRONT VIEW

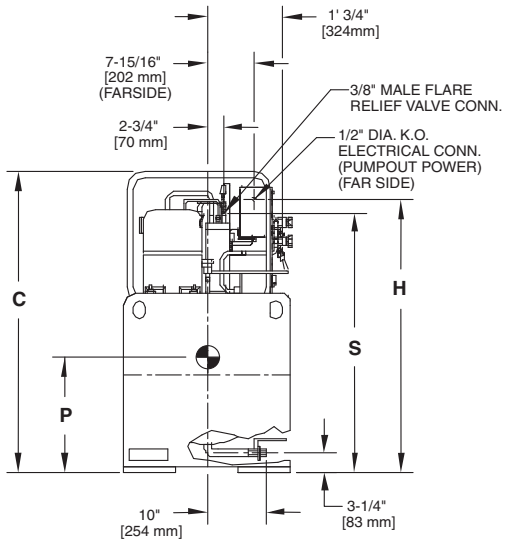

LEFT SIDE VIEW

AVAILABLE CONDUIT KNOCKOUT SIZES

TRADE SIZE	QTY	LOCATION
1/2″	1	TOP
3/4″	1	BOTTOM
1″	1	MIDDLE
1-1/4²	1	MIDDLE

NOTES:
1. See Tables 33 and 34 for pumpout unit dimensions.
2. ⊕ Denotes center of gravity.
3. Dimensions in [ ] are in millimeters.
4. For additional information on the pumpout unit, see certified drawings.
5. Conduit knockout is located on the side of the control box.

Fig. 40 — 19XR Optional Pumpout Unit

Table 33 — Pumpout Unit Dimensions (ft-in.)

TANK SIZE[a]	A	B	C	D	E	F	G	H	J	K
0428	10-5	9-10	4-4-1/4	2-4-3/4	1-2-3/8	3-11/4	6-4-3/16	3-1-13/8	3-4-7/8	2-9-9/16
0452	14-1-11/4	14-4-1/2	4-8-1/4	2-8-1/2	1-4-1/4	3-41/2	7-2-1/4	4-3-1/4	3-8-3/4	3-1-7/16

TANK SIZE[a]	L	M	N	P	R	S	T	U	V	W
0428	3-4-5/8	3-1/2	4-9-1/2	1-7-7/8	2-3/8	3-9	5-1/4	2-5	2-9-7/8	2-5-3/4
0452	3-8-1/2	3-3/8	6-1-15/8	1-8-3/4	2-5/8	4-1	5-1/2	2-5-1/4	2-10-1/8	2-6

NOTE(S):

a. Refer to Fig. 40.

Table 34 — Pumpout Unit Dimensions (mm)

TANK SIZE[a]	A	B	C	D	E	F	G	H	J	K
0428	3175	2997	1327	730	365	946	1935	1203	1038	852
0452	4553	4381	1429	826	413	1029	2191	1302	1137	951

TANK SIZE[a]	L	M	N	P	R	S	T	U	V	W
0428	1032	89	1451	505	619	1143	1530	737	860	756
0452	1130	86	2124	527	625	1225	1537	742	867	762

NOTE(S):

a. Refer to Fig. 40.

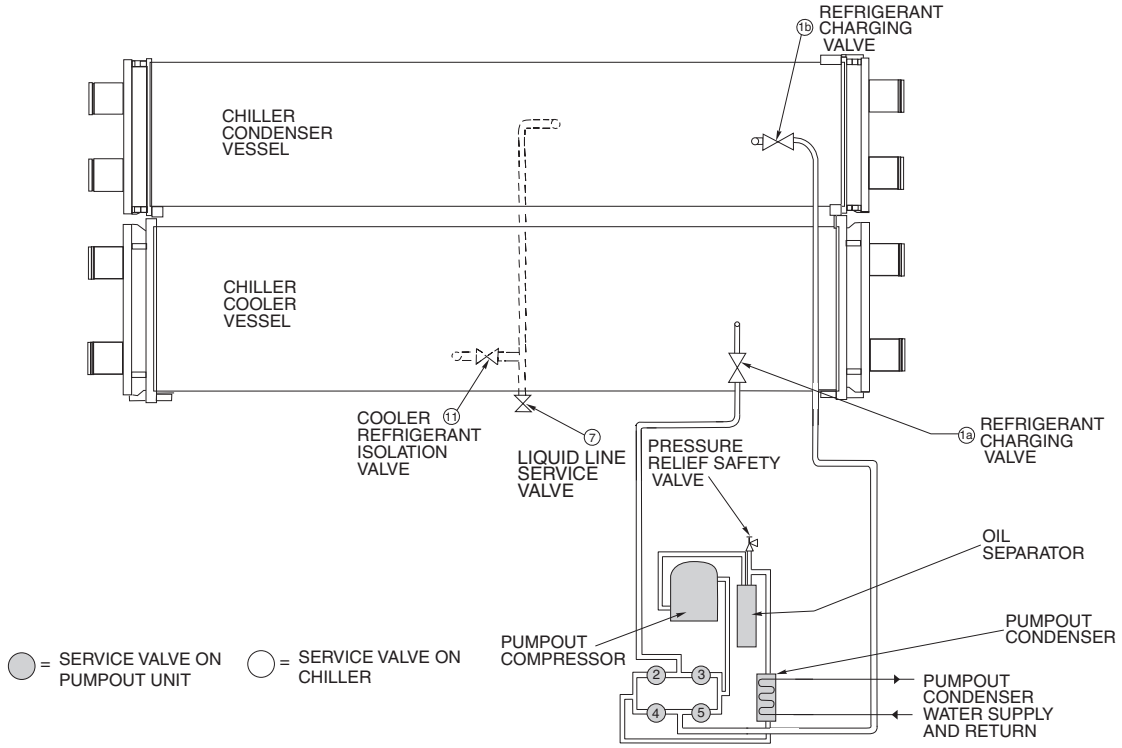

Fig. 41 — Optional Pumpout System Piping Schematic

INSTALL VENT PIPING TO RELIEF VALVES

The 19XR chiller is factory equipped with relief valves on the cooler and condenser shells. Refer to Tables 35 and 36 and Fig. 42-44 for size and location of relief devices, and Table 37 for cooler/relief valve arrangements. Vent relief devices (including fusible plugs) are to be vented to the outdoors in accordance with ANSI/ASHRAE 15 (latest edition) Safety Code for Mechanical Refrigeration and all other applicable codes.

⚠ DANGER

Refrigerant discharged into confined spaces can displace oxygen and cause asphyxiation.

1. If relief devices are manifolded, the cross-sectional area of the relief pipe must at least equal the sum of the areas required for individual relief pipes.
2. Provide a pipe plug near outlet side of each relief device for leak testing. Provide pipe fittings that allow vent piping to be disconnected periodically for inspection of valve mechanism.
3. Piping to relief devices must not apply stress to the device. Adequately support piping. A length of flexible tubing or piping near the device is essential on spring-isolated machines.
4. Cover the outdoor vent with a rain cap and place a condensation drain at the low point in the vent piping to prevent water build-up on the atmospheric side of the relief device.

Table 35 — 19XR Relief Valve Locations

LOCATION	FRAME SIZE	RELIEF VALVE OUTLET SIZE
COOLER	Two-Stage 6—A	1-1/4-in. NPT Female Connector
	Two-Stage 7—B	1-1/4-in. NPT Female Connector
	Two-Stage 7—C	1-1/4-in. NPT Female Connector
CONDENSER	Two-Stage 6—A	1-1/4-in. NPT Female Connector
	Two-Stage 6—B	1-1/4-in. NPT Female Connector
	Two-Stage 7—C	1-1/4-in. NPT Female Connector
	Two-Stage 7—D	1-1/4-in. NPT Female Connector
OPTIONAL STORAGE TANK	N/A	1-1/4-in. NPT Female Connector

NOTE: All valves relieve at 185 psig (1275 kPa).

Table 36 — 19XRV Relief Valve Locations

LOCATION	FRAME SIZE	RELIEF VALVE OUTLET SIZE	QUANTITY OF RELIEF VALVES	
			With Discharge and Cooler Inlet Isolation	Without Discharge and Cooler Inlet Isolation
COOLER	2	1-in. NPT Female Connector	1	2
	3-6	1-1/4-in. NPT Female Connector	1	2
	7,8	1-1/4-in. NPT Female Connector	2	4
CONDENSER	2	1-in. NPT Female Connector	2	2
	3-6	1-1/4-in. NPT Female Connector	2	2
	7,8	1-1/4-in. NPT Female Connector	4	4
OPTIONAL STORAGE TANK	—	1-1/4-in. NPT Female Connector	2	

NOTE: All valves relieve at 185 psig (1275 kPa).

Table 37 — Cooler/Relief Valve Arrangement

HEAT EXCHANGER FRAME SIZE	COMPRESSOR FRAME SIZE	ISOLATION VALVES	COOLER ARRANGEMENT SEE FIGURE NO.	CONDENSER ARRANGEMENT SEE FIGURE NO.
2	2	Yes	43A	44E
		No	44C	44E
3	2	Yes	43A	44E
		No	44C	44E
	3	Yes	43A	44E
		No	44C	44E
4	3	Yes	43A	44E
		No	44C	44E
5	3	Yes	43A	44E
		No	44C	44E
	C	Yes	43A	44E
		No	44C	44E
6	C	Yes	43A	44E
		No	44C	44E
7	C	Yes	43B	44F
		No	44D	44F
	E	Yes	43B	44F
		No	44D	44F
8	E	Yes	43B	44F
		No	44D	44F

COOLER RELIEF VALVE ARRANGEMENT WITH OPTIONAL ISOLATION OF DISCHARGE AND COOLER (Fig. A, B)

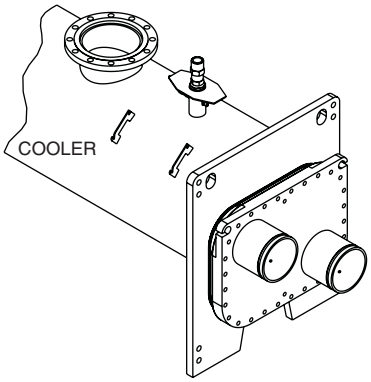

Fig. A

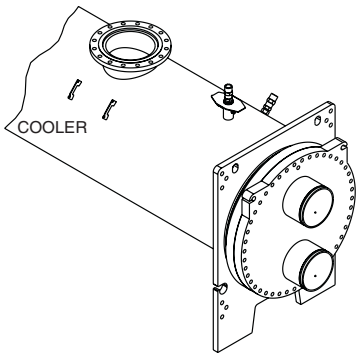

Fig. B

COOLER RELIEF VALVE ARRANGEMENT WITHOUT ISOLATION OPTION OF DISCHARGE AND COOLER (Fig. C, D)

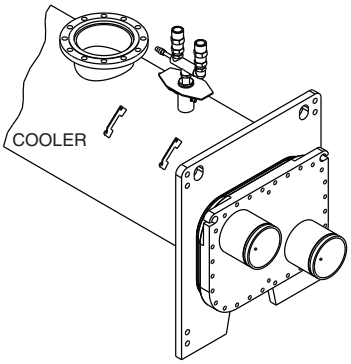

Fig. C

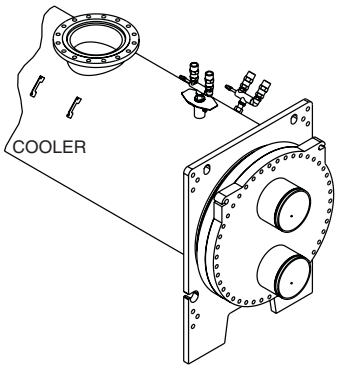

Fig. D

CONDENSER RELIEF VALVE ARRANGEMENT — WITH OR WITHOUT OPTIONAL ISOLATION (Fig. E, F)

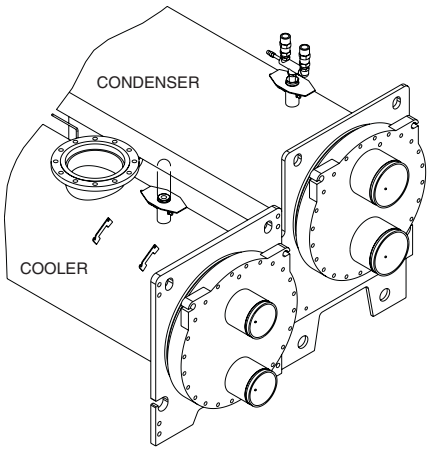

Fig. E

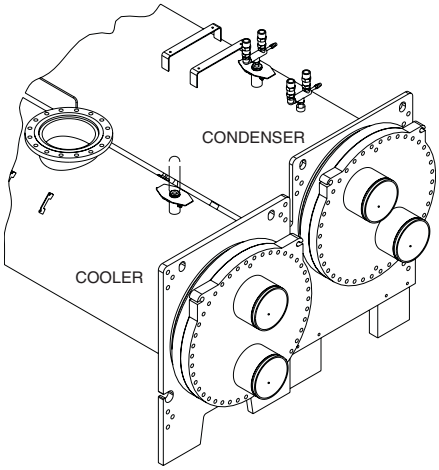

Fig. F

Fig. 42 — 19XRV Relief Valve Arrangements

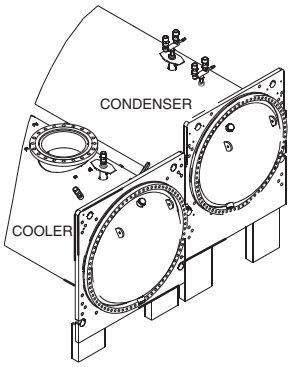

A — WITH ISOLATION VALVE

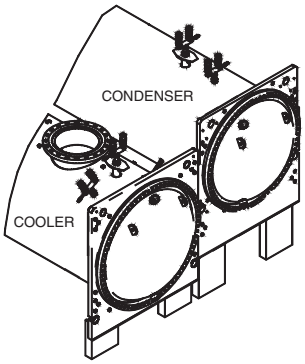

B — WITHOUT ISOLATION VALVE

COOLER HEAT EXCHANGER FRAME SIZE	CONDENSER HEAT EXCHANGER FRAME SIZE	WITH/WITHOUT DISCHARGE ISOLATION VALVE	VIEW CODE	COOLER NO. VALVES	CONDENSER NO. VALVES
A4	A4	With Optional Isolation Valve	A	2	4
		Without Optional Isolation Valve	B	4	4
	B4	With Optional Isolation Valve	A	2	4
		Without Optional Isolation Valve	B	4	4
A6	A6	With Optional Isolation Valve	A	2	4
		Without Optional Isolation Valve	B	4	4
	B6	With Optional Isolation Valve	A	2	4
		Without Optional Isolation Valve	B	4	4

Fig. 43 — Relief Valve Arrangements, 19XR Two-Stage Compressor Frame Size 6

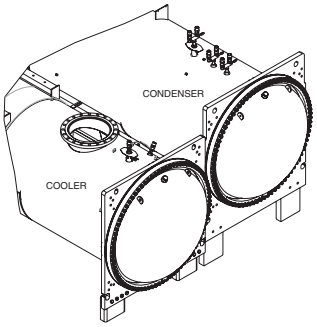

C — WITH ISOLATION VALVE

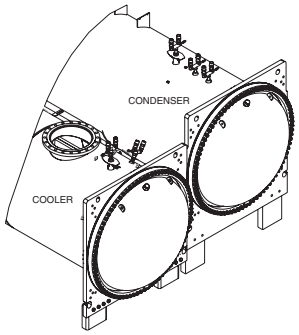

D — WITHOUT ISOLATION VALVE

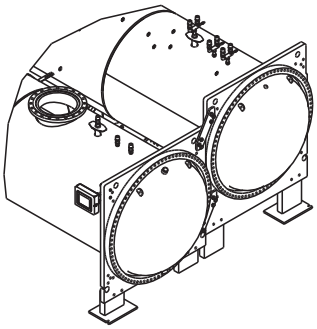

E — WITH ISOLATION VALVE

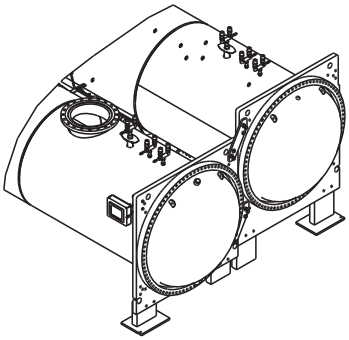

F — WITHOUT ISOLATION VALVE

COOLER HEAT EXCHANGER FRAME SIZE	CONDENSER HEAT EXCHANGER FRAME SIZE	WITH/WITHOUT DISCHARGE ISOLATION VALVE	VIEW CODE	COOLER NO. VALVES	CONDENSER NO. VALVES
B6/B8	C6/C8	With Optional Isolation Valve	C	2	6
		Without Optional Isolation Valve	D	4	6
C6	C6	With Optional Isolation Valve	C	2	6
		Without Optional Isolation Valve	D	4	6
	D6	With Optional Isolation Valve	C	2	6
		Without Optional Isolation Valve	D	4	6
C8	C8	With Optional Isolation Valve	E	3	6
		Without Optional Isolation Valve	F	6	6
	D8	With Optional Isolation Valve	E	3	6
		Without Optional Isolation Valve	F	6	6

Fig. 44 — Relief Valve Arrangements, 19XR Two-Stage Compressor Frame Size 7

Step 5 — Make Electrical Connections

Field wiring must be installed in accordance with job wiring diagrams and all applicable electrical codes.

⚠ CAUTION

Do not run any hazardous voltage wiring in the control panel sections associated with extra-low voltage wiring. Damage to machine could occur as a result.

Wiring diagrams in this publication are for reference only and are not intended for use during actual installation; follow job specific wiring diagrams.

⚠ CAUTION

Do not apply power to the compressor motor or oil pump (even for a rotation check) or apply test voltage of any kind while either chiller module is under dehydration vacuum. Motor insulation breakdown and serious damage may result.

NOTE: The dry contacts for the inputs should be located as close to the starter as possible. The wiring should be capable of preventing electrical noise or induced voltage and should not be routed with any wires with voltage over 50 v.

CONNECT CONTROL INPUTS

⚠ CAUTION

Install a relay, provided by the control contractor, at the starter/control panel to connect to the chiller inputs, such as remote start/stop and spare safety, to reduce the potential for electrical noise into the chiller controller.

Wiring may be specified for a spare safety switch, and a remote start/stop contact can be wired to the starter terminal strip. Additional spare sensors and Carrier Comfort Network® modules may be specified as well. These are wired to the machine control panel as indicated in Fig. 45. The control panel optional wiring and power panel component layout are shown in Fig. 46-51.

Both chiller control panel and power panel have knockouts available that fits trade size 1/2 in. conduit.

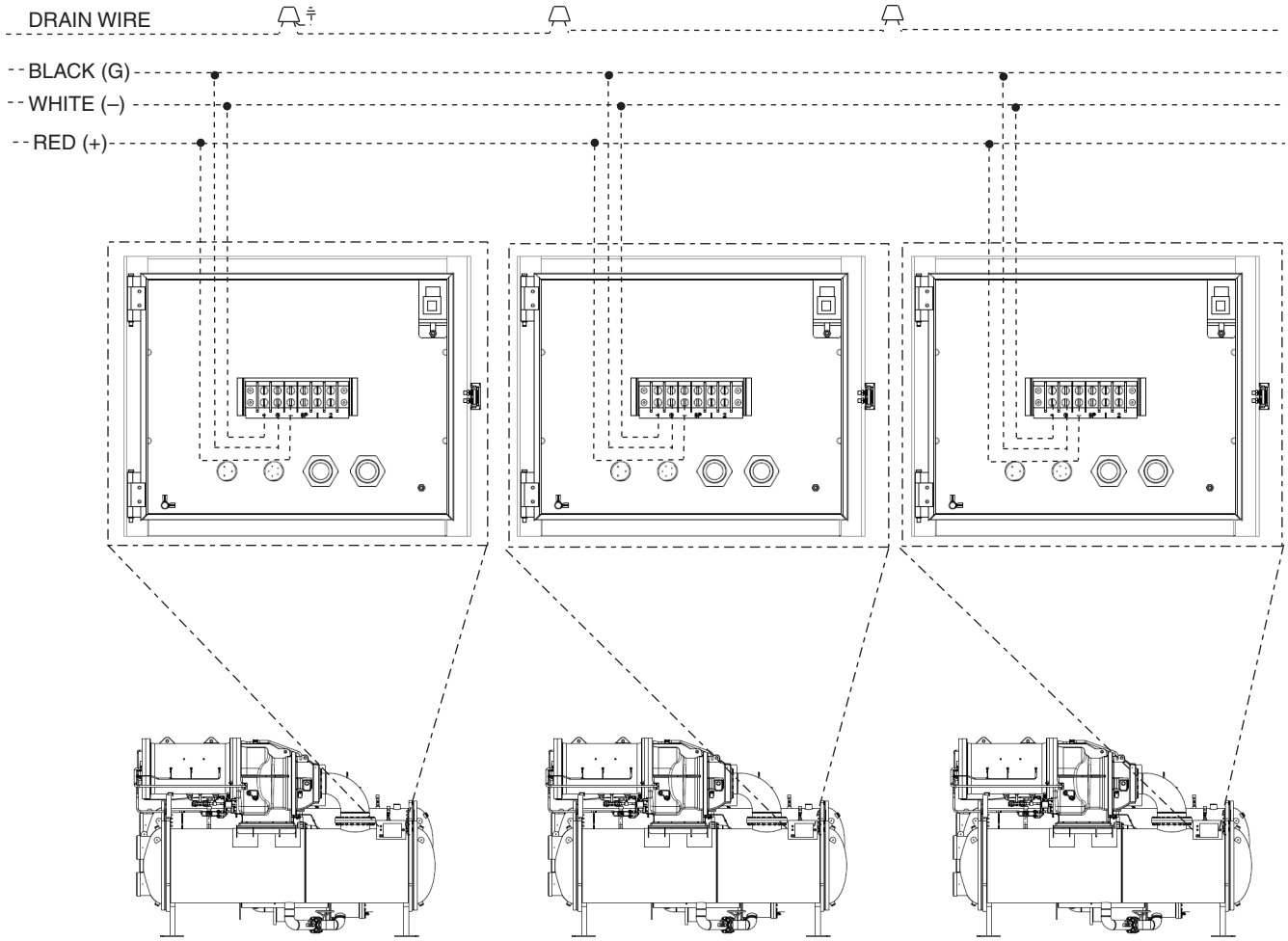

NOTE: Field-supplied terminal strip must be located in control panel.

Fig. 45 — CCN Communication Wiring for Multiple Chillers (Typical for 19XR6/7 Chillers)

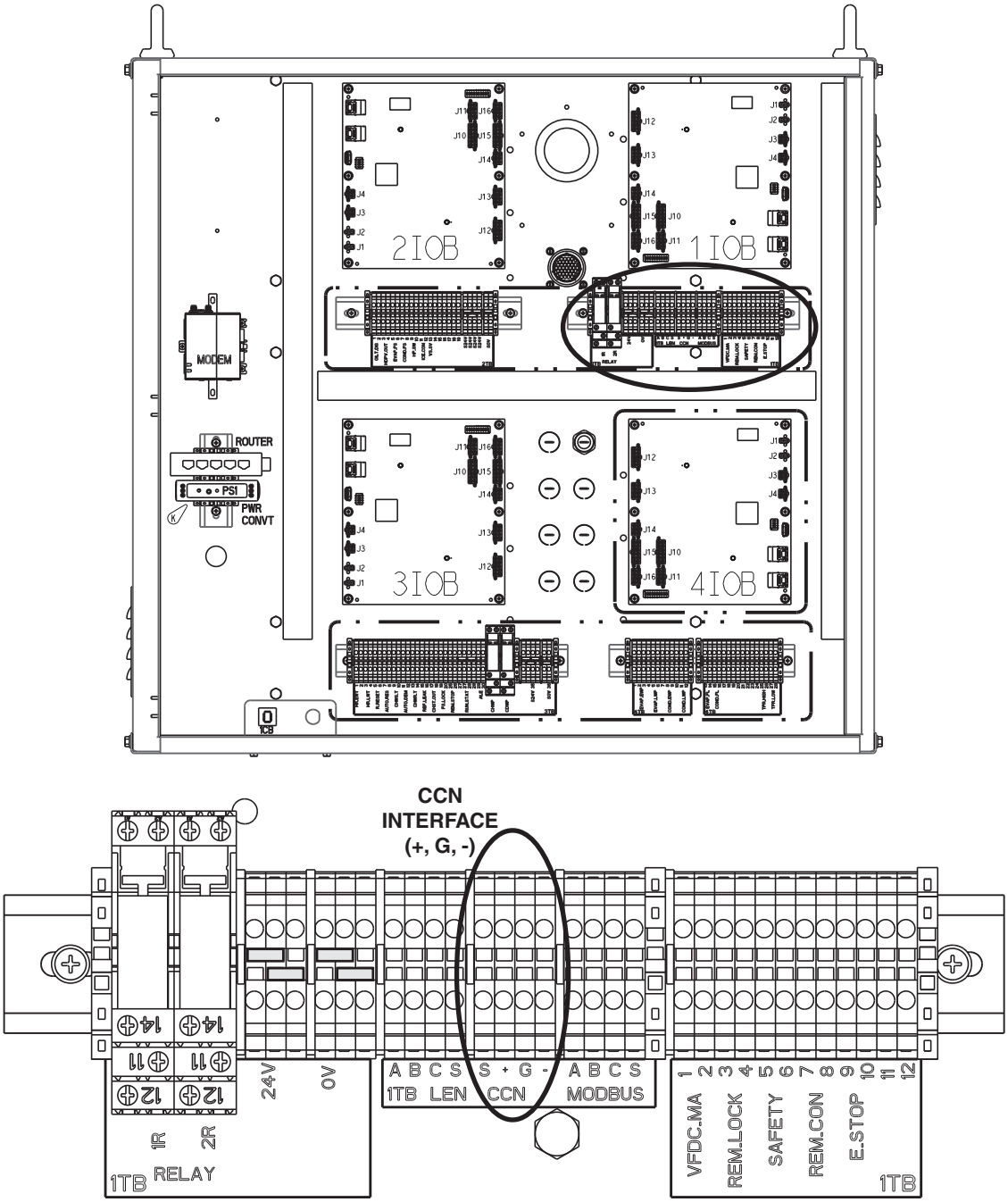

Fig. 46 — 19XR2-E Control Panel — CCN Communication Wiring for Multiple Chillers

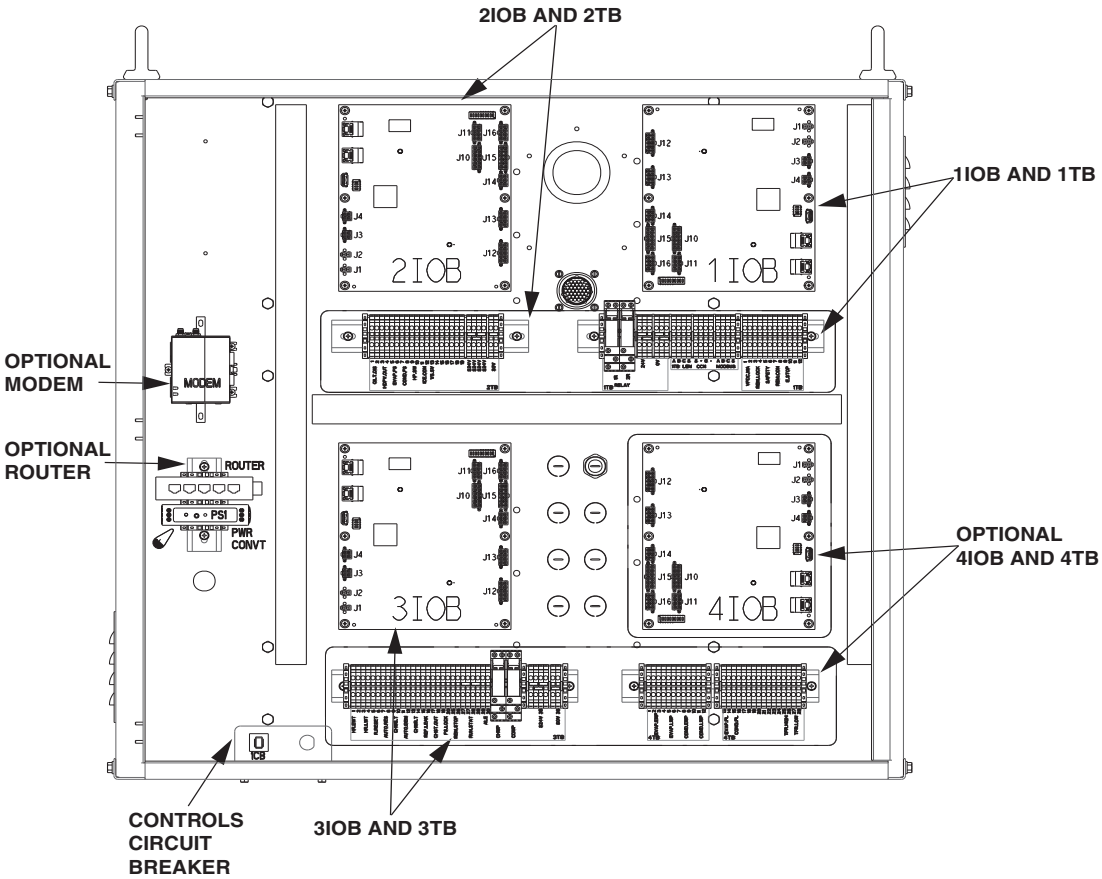

Fig. 47 — 19XR2-E Control Panel Layout and Field Connections

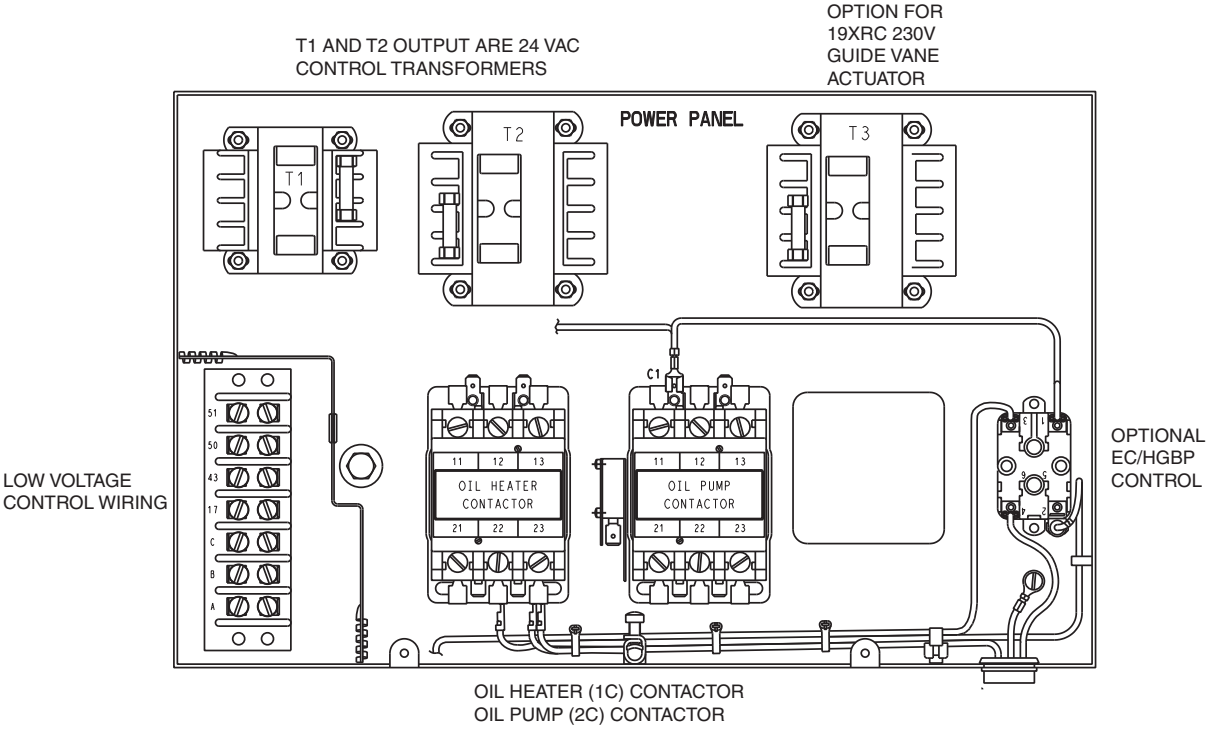

Fig. 48 — 19XR2-E Power Panel Layout

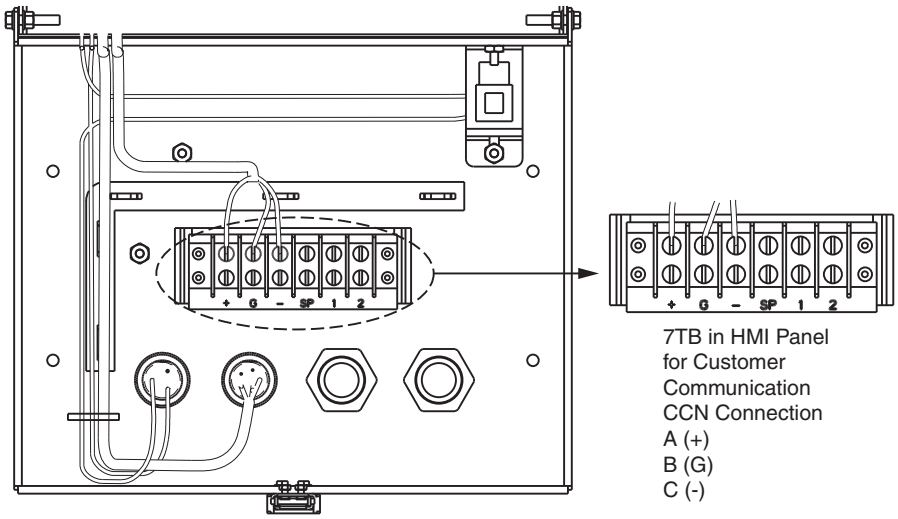

Fig. 49 — 19XR6/7 HMI Panel

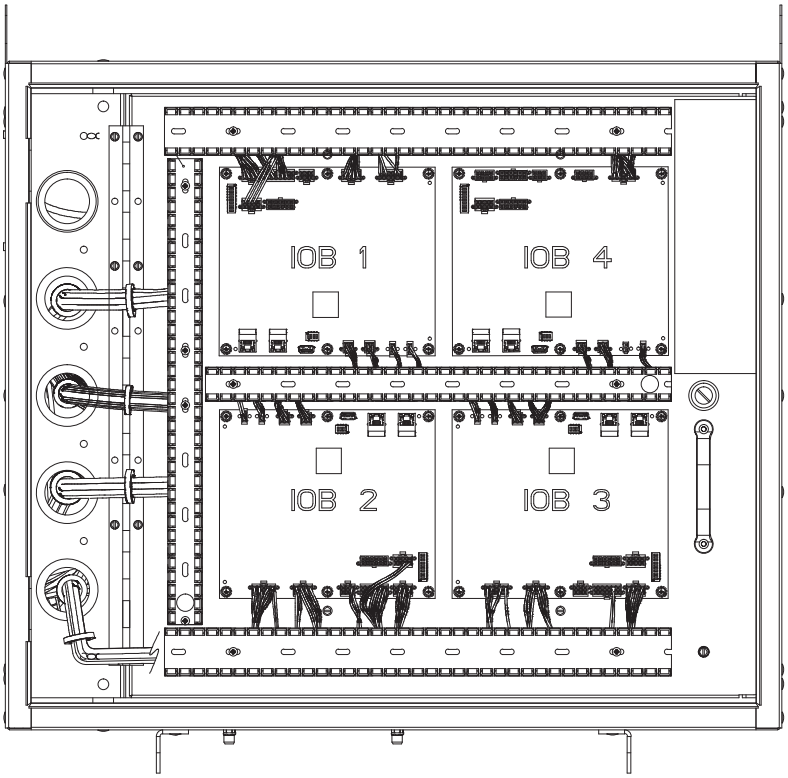

Fig. 50 — 19XR6/7 Control Panel, IOB Layer

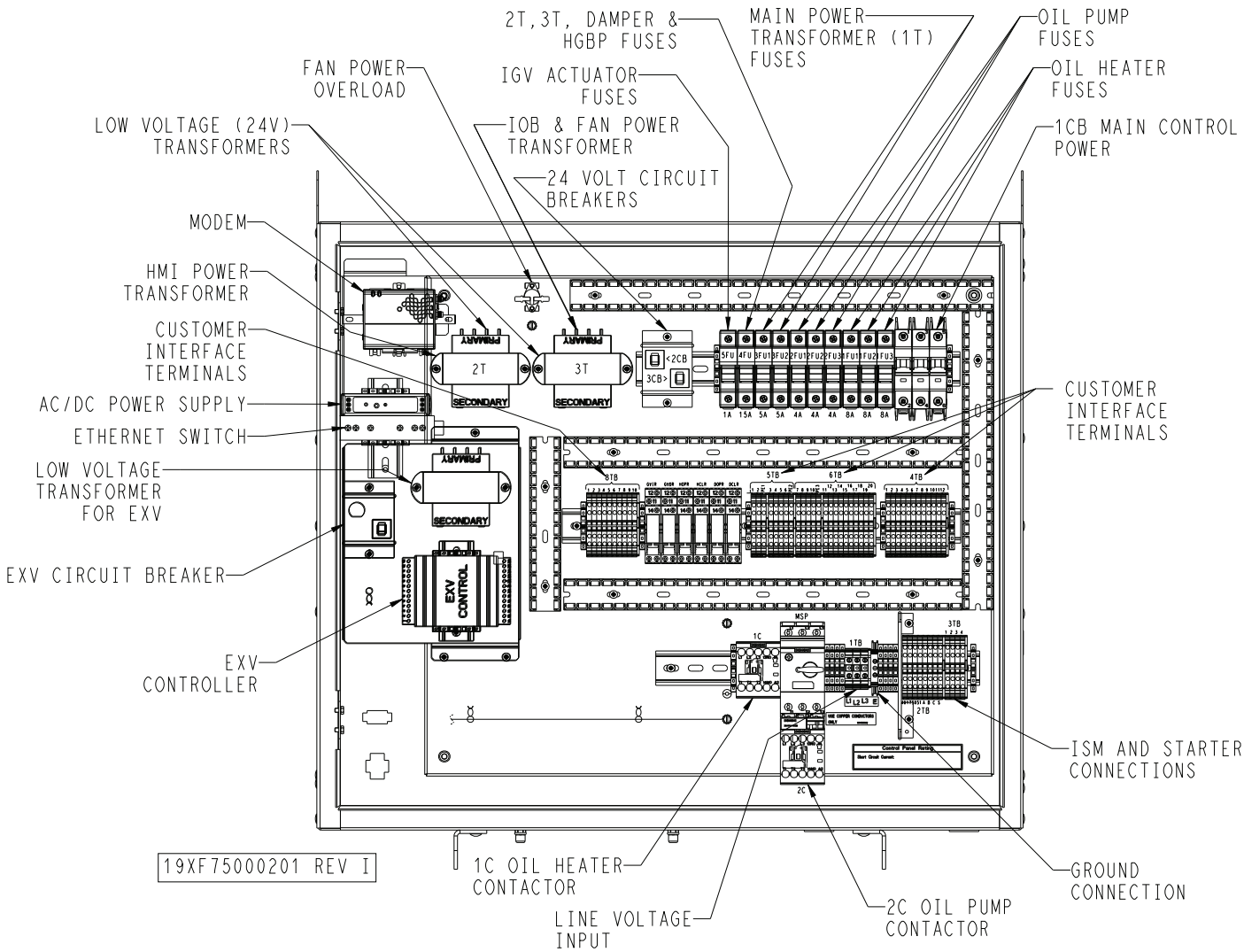

Fig. 51 — 19XR6/7 Control Panel, Bottom Layer

CONNECT CONTROL OUTPUTS

Connect auxiliary equipment, chilled and condenser water pumps, and spare alarms as required and indicated on job wiring drawings.

CONNECT STARTER

The 19XR chiller is available with both unit mount (Fig. 52). Models 19XR2-E are available with both unit mount and free-standing fixed speed starters and VFDs. Models 19XR6-7 are available with free-standing starters or VFD only.

IMPORTANT: Be sure to ground the power circuit in accordance with the National Electrical Code (NEC), applicable local codes, and job wiring diagrams. Also, make sure correct phasing is observed for proper rotation.

For free-standing starters assemble and install compressor terminal box in desired orientation, and cut necessary conduit openings in conduit support plates. See Fig. 52. Attach power leads to compressor terminals in accordance with job wiring drawings, observing caution label in terminal box. Use only copper conductors. The motor must be grounded in accordance with NEC, applicable local codes, and job wiring diagrams. Installer is responsible for any damage caused by improper wiring between starter and compressor motor. See Fig. 53-64 for VFD (variable frequency drive), control, IOB (input/output board), and ISM (integrated starter module), MX3 starter wiring diagrams.

IMPORTANT: For free-standing starters do not insulate terminals until wiring arrangement has been checked and approved by Carrier start-up personnel. Refer to torque and connection instructions provided in the Start-up and Operations Manual for motor terminal wiring connections. Also, make sure correct phasing is followed for proper motor rotation.

FIELD WIRING

Use field wiring for the following configurations.

For 19XR2-E:

- Fixed speed low voltage - factory unit mounted starter
- Free-standing low voltage starter
- Free-standing low voltage VFD
- Free-standing medium/high voltage starter
- Free-standing medium voltage VFD
- Fixed speed or VFD - factory unit mounted (low voltage).
- Fixed speed - free-standing (low voltage)

For 19XR6-7:

- Free-standing fixed speed
- Free-standing VFD

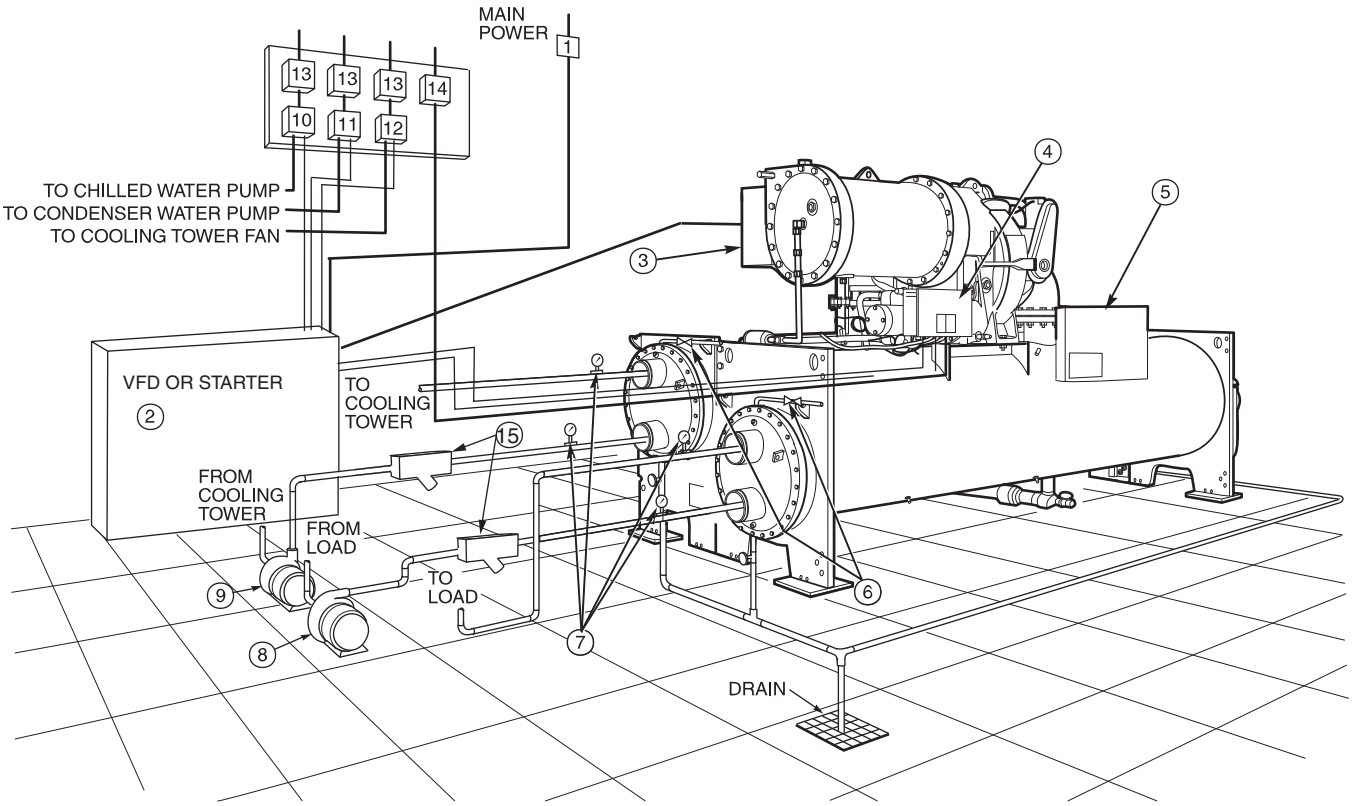

LEGEND

1	—	Disconnect
2	—	Compressor Motor Starter
3	—	Compressor Motor Terminal Box
4	—	Power Panel
5	—	Control Panel
6	—	Vents
7	—	Pressure Gages
8	—	Chilled Water Pump
9	—	Condenser Water Pump
10	—	Chilled Water Pump Starter
11	—	Condensing Water Pump Starter
12	—	Cooling Tower Fan Starter (Low Fan, High Fan)
13	—	Disconnect
14	—	Oil Pump Disconnect (See Note 4)
15	—	Strainer

Piping
Control Wiring
Power Wiring

NOTES:
1. Wiring and piping shown are for general point-of-connection only and are not intended to show details for a specific installation. Certified field wiring and dimensional diagrams are available on request.
2. All wiring must comply with applicable codes.
3. Wiring not shown for optional devices such as:
   - Remote Start/Stop
   - Remote Alarms
   - Optional Safety Device
   - 4 to 20 mA Resets
   - Optional Remote Sensors
4. Oil pump disconnect may be located within the enclosure of Item 2 — regardless if free-standing or unit mounted starter.
5. IMPORTANT: Carrier suggests that a structural engineer be consulted if transmission of vibrations from mechanical equipment is of concern.
6. Isolation valves are recommended on the cooler and condenser piping to each chiller for service.
7. Operating environment — Chiller should be installed in an indoor environment where the ambient temperature is 40 to 104°F (4 to 40°C) with a relative humidity (non-condensing) of 95% or less. To ensure that electrical components operate properly, do not locate the chiller in an area exposed to dust, dirt, corrosive fumes, or excessive heat and humidity.

Fig. 52 — 19XR Chiller with Free-Standing Starter

LEGEND FOR FIG. 53

REFERENCE NUMBER	EXPLANATION
1	3 Phase Under/Over Voltage
	Phase Loss/Imbalance/Reversal
	Motor Overload Protection
	Frequency Shift
	kW Transducer/kW Hours/Demand kW
	Single Cycle Dropout
	Motor/Starter Overcurrent
	Control Power Transformer (3KVA) (Integral)
	Controls and Oil Heater Circuit Breaker (integral)
	Oil Pump Circuit Breaker (integral)
	3 Phase Analog Volts/Amps Meter Package
	Power Factor Correction Package
	Lightning/Surge Arrestor Package
	Phase to Phase Ground Fault Detection
	Phase to Ground Fault Detection
2	Compressor Motor Starter Branch Disconnect
A	Evaporator Liquid Pump Starter Disconnect
B	Evaporator Liquid Pump Motor Starter
C	Condenser Liquid Pump Starter Disconnect
D	Condenser Liquid Pump Motor Starter
E	Cooling Tower Fan Motor Starter Disconnect (Low Fan/#1)
F	Cooling Tower Fan Motor Starter (Low Fan/#1)
G	Cooling Tower Fan Motor Starter Disconnect (High/#2)
H	Cooling Tower Fan Motor Starter (High Fan/#2)
J	See Note 3.1 [N.O.] — Field Control Wiring (Spare safety (N.O), Remote Start/Stop (N.O), Alarm
N	Lug Adapters See Note 2.1

NOTE: See Notes on page 75.

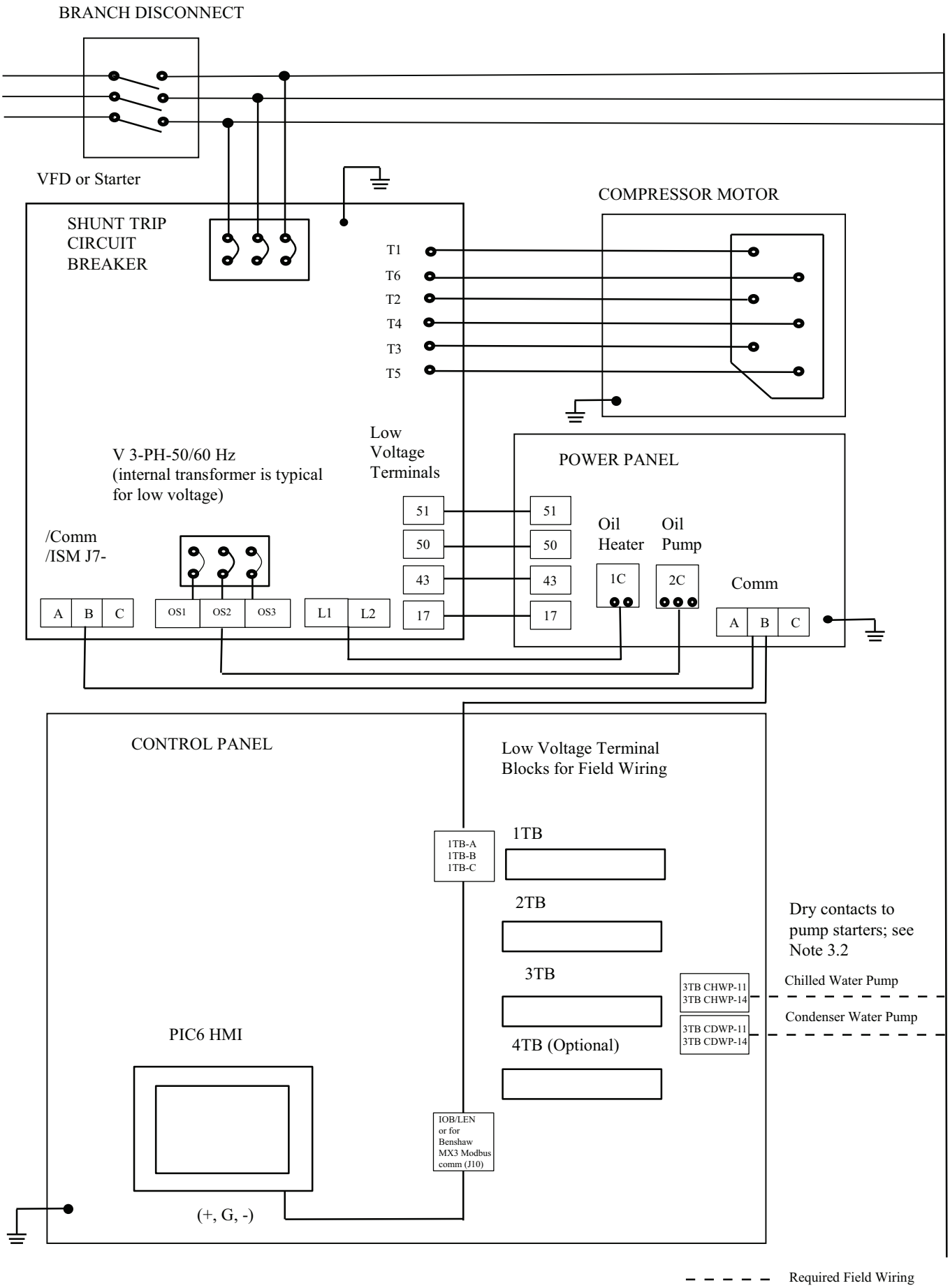

Fig. 53 — Typical 19XR2-E Fixed Speed or VFD — Factory Unit Mounted (Low Voltage) Unit with Integrated Starter Module (ISM) or Benshaw MX3

NOTES FOR Fig. 53
19XR2-E with Unit-Mounted Starter
19XR2-E Fixed Speed or VFD (with ISM) — Factory Unit Mounted (Low Voltage)

I. GENERAL

1.0 Starters shall be designed and manufactured in accordance with Carrier Engineering Requirement Z-415.

1.1 All field-supplied conductors, devices, and the field-installation wiring, and termination of conductors and devices, must be in compliance with all applicable codes and job specifications.

⚠ CAUTION

To prevent damage to machine, do NOT punch holes or drill into the top surface of the starter enclosure for field wiring. Knockouts are provided on the side of the starter enclosure for field wiring connections.

1.2 The routing of field-installed conduit and conductors and the location of field-installed devices must not interfere with equipment access or the reading, adjusting, or servicing of any component.

1.3 Equipment installation and all starting and control devices, must comply with details in equipment submittal drawings and literature.

1.4 Contacts and switches are shown in the position they would assume with the circuit de-energized and the chiller shut down.

1.5 WARNING — Do not use aluminum conductors.

1.6 Installer is responsible for any damage caused by improper wiring between starter and machine.

II. POWER WIRING TO STARTER

2.0 Provide a means of disconnecting power to starter.

2.1 Power conductor rating must meet minimum unit nameplate voltage and unit MCA (minimum circuit ampacity).

2.2 Lug adapters may be required if installation conditions dictate that conductors be sized beyond the minimum ampacity required. Breaker lugs will accommodate the quantity (#) and size (MCM) cables (per phase) as indicated in tables below.

BENSHAW (SOLID-STATE)[a]		
Starter RLA	Lug Capacity (Per Phase)	
	# Conductors	Conductor Range
95-200A	1	6 AWG — 350 MCM
201-480A	2	3/0 AWG — 500 MCM
481-640A	3	1/0 AWG — 500 MCM
641-739A	4	250 — 500 MCM
740-808	4	250 — 500 MCM
809-978	5	300 — 600 MCM
980-1390A	2	3/0 AWG — 500 MCM

BENSHAW (WYE-DELTA)[a]		
Starter RLA	Lug Capacity (Per Phase)	
	# Conductors	Conductor Range
112-217	1	6 AWG — 350 MCM
218-277	2	3/0 AWG — 500 MCM
278-364	2	3/0 AWG — 500 MCM
365-476	2	3/0 AWG — 500 MCM
477-606	4	250 — 500 MCM
607-779	4	250 — 500 MCM
780-1143	5	300 — 600 MCM
1144-1551	5	300 — 600 MCM

NOTE(S):

a. Benshaw unit-mounted starters communicate via Modbus between PIC6 and starter MX3.

2.3 Power conductors to starter must enter through top of enclosure. Flexible conduit should be used for the last few feet to the enclosure to provide unit vibration isolation.

2.4 Compressor motor and controls must be grounded by using equipment grounding lugs provided inside unit-mounted starter enclosure.

2.5 Starters with "Rated Load Amps" (RLA) greater than 740 require the assembly and the installation of a "Top Hat" (located inside enclosure) to provide the required wire bending space for incoming power leads.

2.6 Metering current transformers (CTs), if present, have an inner diameter of 2-3/4 inches. Caution should be taken when selecting power wiring so that all power cables can pass through the CTs.

III. CONTROL WIRING

3.0 Field-supplied control conductors to be at least 18 AWG or larger. It is recommended to connect all input/output field control wiring to Carrier Input/Output boards (IOBs) inside Carrier control panel.

3.1 Optional input device contacts (devices not supplied by Carrier), must have 24 VAC rating. MAX current is 60 mA, nominal current is 10 mA. The field wiring should be designed/installed in such a manner as to prevent electrical noise from being introduced into the chiller controller. Switches with gold plated bifurcated contacts are recommended.

3.2 Each integrated contact output can control loads (VA) for evaporator pump, condenser pump, tower fan low, tower fan high, and alarm annunciator devices rated 1 amp AC RMS steady-state and 4 amps surge. Coil voltage of relay is 24 vac. Be sure to use pilot relays to avoid damage to the IOBs. Suggested rating of pilot relay is 10 amps; for example, 19XV05005503.

3.3 For water pump control, either hardwire from chiller controls or alternatively the chiller controls must be interlocked with the building automation system so chiller controls can start/stop the water flow. Factory provides pilot relays CHWP and CHWP for field water pump connections.

⚠ CAUTION

Control wiring for Carrier to start water pumps and establish flows must be provided to assure machine protection. If primary pump, tower fan, and flow control is by other means, also provide parallel means for control by Carrier. Failure to do so could result in machine freeze-up or overpressure and loss of warranty.

Do not use control transformers in the control center as the power source for external or field-supplied contactor coils, actuator motors or any other loads.

3.4 For tower fan control IOB4 (option) must be enabled. If one single speed fan is used, connect fan control leads to control panel 4IOB-25 and 4IOB-26, jumper 4IOB-25 to 4IOB-27, and jumper 4IOB-26 to 4IOB-28. This will allow the fan to be actuated by closure of either "low fan" or "high fan" 4IOB channel contact.

3.5 Do not route control wiring carrying 30-v or less within a conduit which has wires carrying 50-v or higher or along side wires carrying 50 v or higher.

3.6 Control wiring between starter and power panel must be separate shielded cables with minimum rating of 600-v, 80°C. Ground shield at starter.

3.7 Head Pressure 4-20 mA output signal is designed for controllers with a non-grounded 4-20 mA input signal and a maximum input impedance of 500 ohms.

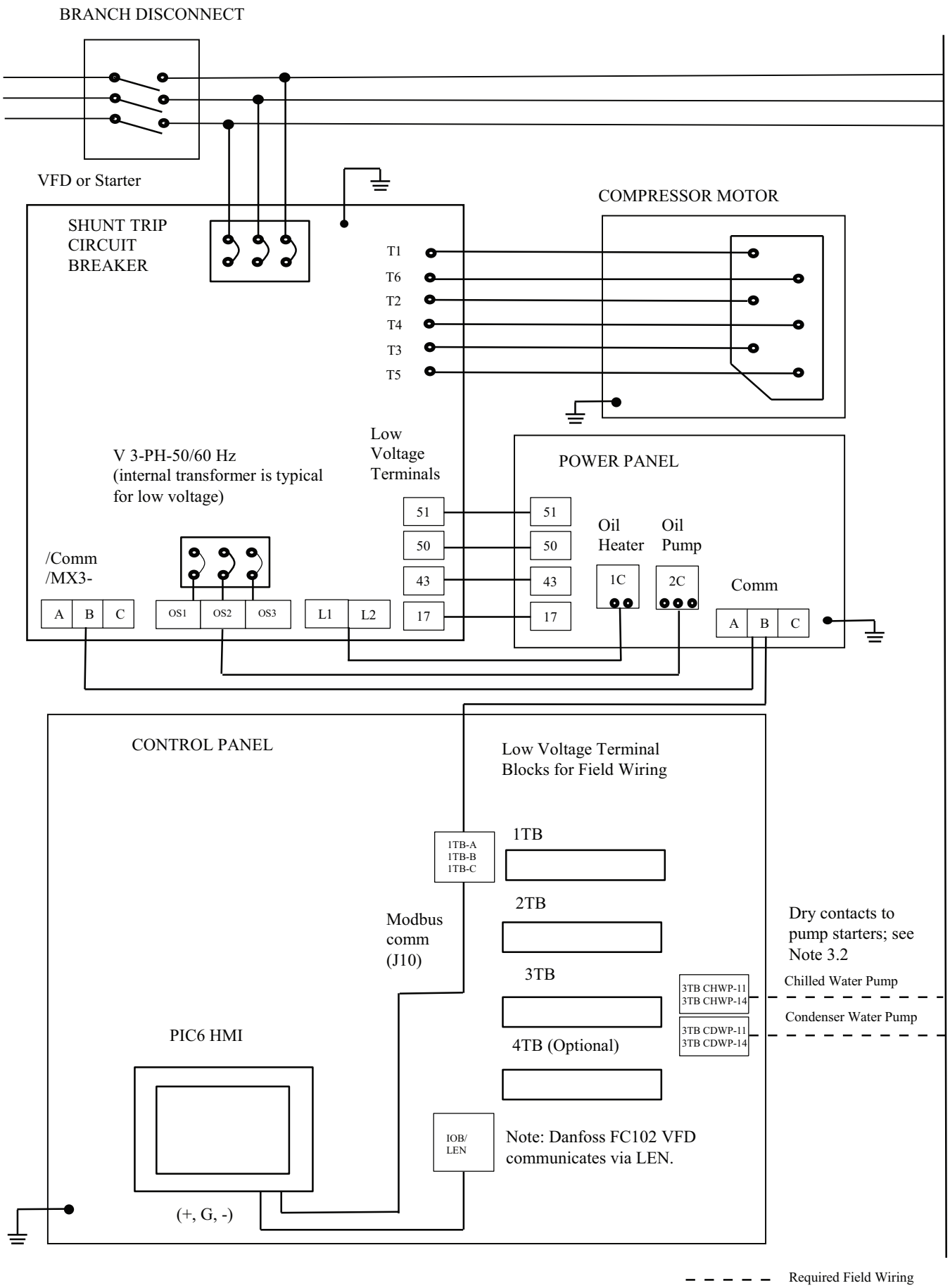

Fig. 54 — Typical 19XR2-E Fixed Speed or VFD — Factory Unit Mounted (Low Voltage) Unit with Modbus Communication between PIC6 HMI and Starter/VFD

NOTES FOR Fig. 54
19XR2-E Unit Mount VFD (Low Voltage)
19XR2-E Fixed Speed or VFD with Modbus Communication between PIC6 HMI and Starter/VFD — Factory Unit Mounted (Low Voltage)

I General

1.0 Variable Frequency Drive (VFD) shall be designed and manufactured in accordance with Carrier engineering requirement Z-417 or Z-420. Fixed speed starters are designed and manufactured in accordance with Carrier engineering requirement Z-415.

1.1 All field-supplied conductors and devices must be compliant and be installed in compliance with all applicable codes and job specifications.

⚠ CAUTION

To prevent damage to machine, do NOT punch holes or drill into the top surface of the starter enclosure for field wiring. Knockouts are provided on the side of the starter enclosure for field wiring connections.

1.2 The routing of field-installed conduit and conductors and the location of field-installed devices must not interfere with equipment access or the reading, adjusting, or servicing of any component.

1.3 Equipment installation and all starting and control devices must comply with details in equipment submittal drawings and literature.

1.4 Contacts and switches are shown in the position they would assume with the circuit de-energized and chiller shut down.

1.5 Warning — Do not use aluminum conductors.

1.6 Warning — Remove panel above VFD main circuit breaker before drilling. Do not drill into any other VFD cabinet panels.

II Power Wiring to VFD

2.0 Provide a means of disconnecting branch feeder power to VFD. Provide short circuit protection and interrupt capacity for branch feeder in compliance with all applicable codes.

2.1 Metal conduit must be used for the power wires from VFD to branch feeder.

2.2 Line side power conductor rating must meet VFD nameplate voltage and chiller full load amps (minimum circuit ampacity).

2.3 Lug adapters may be required if installation conditions dictate that conductors be sized beyond the minimum ampacity required. Circuit breaker lugs will accommodate the quantity (#) and size cables (per phase) as follows.

DANFOSS STANDARD TIER WIRE LUG SIZES

CARRIER VFD FRAME	DANFOSS			MAX RATED (amp)	BREAKER	ABB LUG	LUG CABLE RANGE (kcmil)
	TYPE	SIZE	DRIVE				
DD588	D	D2h	N315	570	HH83ZZ031/ 800A	1SDA113095R1	(3) 2/0-400
DE658	E1	E1h	N355	638	HH83ZZ031/ 800A	1SDA113095R1	(3) 2/0-400
DE745	E1	E1h	N400	722	HH83ZZ031/ 800A	1SDA113095R1	(3) 2/0-400
DE800	E1	E1h	N450	776	HH83ZZ031/ 800A	1SDA113095R1	(3) 2/0-400
DE880	E2	E2h	N500	853	HH82ZZ003 2/1000A	1SDA104758R1	(4) 4/0-500
DE990	E2	E2h	N560	960	HH82ZZ003 2/1000A	1SDA104758R1	(4) 4/0-500
DP1120	DP	Da4	N630	1086	HH83ZZ009/ 1600A	K8TM	(6) 1/0-750
DP1260	DP	Da4	N710	1222	HH83ZZ009/ 1600A	K8TM	(6) 1/0-750
DP1460	DP	Da4	N800	1416	HH83ZZ011/ 2000A	K8TM	(6) 1/0-750
DP1670	DP	Da4	N1M0	1619	HH83ZZ011/ 2000A	K8TM	(6) 1/0-750

ROCKWELL LF2 WIRE LUGS

VFD MAX INPUT AMPS	STANDARD 65KAIC LUG CAPACITY (PER PHASE)		OPTIONAL 100KAIC LUG CAPACITY (PER PHASE)	
	No. of Conductors	Conductor Range	No. of Conductors	Conductor Range
442A	3	2/0 — 400 MCM	3	2/0 — 400 MCM
608A	3	2/0 — 400 MCM	3	2/0 — 400 MCM
900A	4	1/0 — 750 MCM	4	1/0 — 750 MCM
1200A	4	1/0 — 750 MCM	4	1/0 — 750 MCM

ROCKWELL/ALLEN BRADLEY STANDARD TIER WIRE LUGS

CARRIER VFD MAX INPUT AMPS	VOLTAGE	STANDARD		ALTERNATE	
		ABB LUG	LUG CABLE RANGE	ABB LUG	LUG CABLE RANGE
230	480	KT5400	(2) 3/0 - 250 MCM	KT5300	(1) 250 - 500 MCM
335	480	K6TJ	(3) 2/0 - 400 MCM	K6TH	(2) 250 - 500 MCM
445	480	K6TJ	(3) 2/0 - 400 MCM	K6TH	(2) 250 - 500 MCM
230	380/404/415	KT400	(2) 3/0 - 250 MCM	KT5300	(1) 250 - 500 MCM
335	380/404/415	K6TJ	(3) 2/0 - 400 MCM	K6TH	(2) 250 - 500 MCM
445	380/404/415	K6TJ	(3) 2/0 - 400 MCM	K6TH	(2) 250 - 500 MCM
263	600	KT400	(2) 3/0 - 250 MCM	KT5300	(1) 250 - 500 MCM

If larger lugs are required, they can be purchased from the manufacturer of the circuit breaker.

2.4 Compressor motor and controls must be grounded by using equipment grounding lug provided inside unit-mounted VFD enclosure.

III Control Wiring

3.0 Field-supplied control conductors to be at least 18 AWG or larger. It is recommended to connect all input/output field control wiring to Carrier Input/Output boards (IOBs) inside Carrier control panel.

3.1 Optional Input device contacts (devices not supplied by Carrier) must have 24 vac rating. Max current is 60 mA; nominal current is 10 mA. The field wiring should be designed/installed in such a manner as to prevent electrical noise from being introduced into the chiller controller. Switches with gold-plated bifurcated contacts are recommended.

3.2 Each integrated contact output can control loads (VA) for evaporator pump, condenser pump, tower fan low, tower fan high, and alarm annunciator devices rated 1 amp AC RMS steady-state and 4 amps surge. Coil voltage of relay is 24 vac. Be sure to use pilot relays to avoid damage to the IOBs. Suggested rating of pilot relay is 10 amps; for example, 19XV05005503.

3.3 For water pump control, either hardwire from chiller controls or alternatively the chiller controls must be interlocked with the building automation system so chiller controls can start/stop the water flow. Factory provides pilot relays CHWP and CHWP for field water pump connections.

⚠ CAUTION

Control wiring for Carrier to start water pumps and establish flows must be provided to assure machine protection. If primary pump, tower fan, and flow control is by other means, also provide parallel means for control by Carrier. Failure to do so could result in machine freeze-up or overpressure and loss of warranty.

Do not use control transformers in the VFD enclosure or power panel as the power source for external or field-supplied contactor coils, actuator motors, or any other loads.

3.4 Do not route control wiring carrying 30-v or less within a conduit which has wires carrying 50-v or higher or along side wires carrying 50-v or higher.

3.5 Spare 4 to 20 mA output signal is designed for controllers with a non-grounded 4 to 20 mA input signal and a maximum input impedance of 500 ohms.

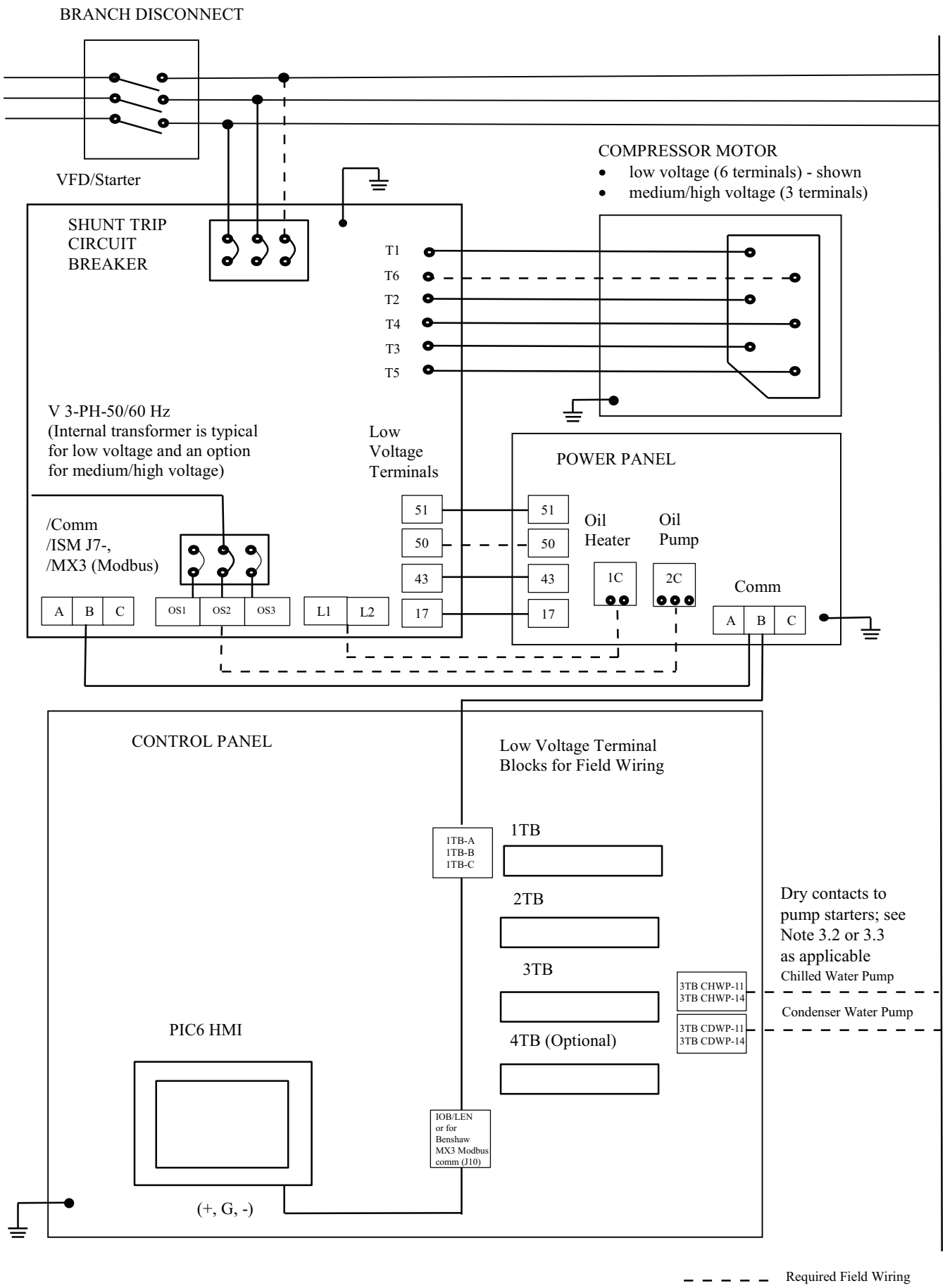

Fig. 55 — 19XR2-E with Free-Standing Low Voltage Starter; 19XR2-E with Free-Standing Low Voltage VFD; 19XR2-E with Free-Standing Medium Voltage Starter with Integrated Starter Module (ISM)

NOTES FOR Fig. 55
19XR2-E with Free-Standing Low Voltage Starter

I. GENERAL

1.0 Starters shall be designed and manufactured in accordance with Carrier Engineering Requirement Z-415.

1.1 All field-supplied conductors, devices, and the field installation wiring, termination of conductors and devices, must be in compliance with all applicable codes and job specifications.

⚠ CAUTION

To prevent damage to machine, do NOT punch holes or drill into the top surface of the starter enclosure for field wiring. Knockouts are provided on the side of the starter enclosure for field wiring connections.

1.2 The routing of field-installed conduit and conductors and the location of field-installed devices must not interfere with equipment access or the reading, adjusting, or servicing of any component.

1.3 Equipment installation and all starting and control devices, must comply with details in equipment submittal drawings and literature.

1.4 Contacts and switches are shown in the position they would assume with the circuit de-energized and the chiller shut down.

1.5 WARNING — Do not use aluminum conductors.

1.6 Installer is responsible for any damage caused by improper wiring between starter and machine.

1.7 All field-installed wiring is field-supplied.

II. POWER WIRING TO STARTER

2.0 Provide a means of disconnecting power to starter.

2.1 Lug adapters may be required if installation conditions dictate that conductors be sized beyond the minimum ampacity required. Contact starter supplier for lug information.

2.2 Compressor motor and controls must be grounded by using equipment grounding lug provided inside starter enclosure.

III. CONTROL WIRING

3.0 Field supplied control conductors to be at least 18 AWG or larger. It is recommended to connect all input/output field control wiring to Carrier Input/Output boards (IOBs) inside Carrier control panel.

3.1 Optional input device contacts (devices not supplied by Carrier), must have 24 VAC rating. MAX current is 60 mA, nominal current is 10 mA. The field wiring should be designed/installed in such a manner as to prevent electrical noise from being introduced into the chiller controller. Switches with gold plated bifurcated contacts are recommended.

3.2 Each integrated contact output can control loads (VA) for evaporator pump, condenser pump, tower fan low, tower fan high, and alarm annunciator devices rated 1 amp AC RMS steady-state and 4 amps surge. Coil voltage of relay is 24 vac. Be sure to use pilot relays to avoid damage to the IOBs. Suggested rating of pilot relay is 10 amps; for example, 19XV05005503.

3.3 For water pump control, either hardwire from chiller controls or alternatively the chiller controls must be interlocked with the building automation system so chiller controls can start/stop the water flow. Factory provides pilot relays CHWP and CHWP for field water pump connections.

⚠ CAUTION

Control wiring for Carrier to start water pumps and establish flows must be provided to assure machine protection. If primary pump, tower fan, and flow control is by other means, also provide parallel means for control by Carrier. Failure to do so could result in machine freeze-up or overpressure and loss of warranty.

Do not use control transformers in the control center as the power source for external or field-supplied contactor coils, actuator motors or any other loads.

3.4 Do not route control wiring carrying 30-v or less within a conduit which has wires carrying 50-v or higher or along side wires carrying 50-v or higher.

3.5 Control wiring between starter and power panel must be separate shielded cables with minimum rating 600-v, 80°C. Ground shield at starter.

3.6 If optional pumpout/oil pump circuit breaker is not supplied within the starter enclosure, it must be located within sight of machine with wiring routed to suit.

3.7 When providing conductors for oil pump motor and oil heater power, refer to sizing data on label located on the chiller power panel, equipment submittal documentation or equipment product data catalog.

3.8 Head Pressure 4-20 mA output signal is designed for controllers with a non-grounded 4-20 mA input signal and a maximum input impedance of 500 ohms.

3.9 For Benshaw MX3 starters, use Belden 3106A (RS-485 cable) for the communication cable between Carrier power panel and Benshaw starter (Modbus communication).

IV. POWER WIRING BETWEEN FREE-STANDING STARTER AND COMPRESSOR MOTOR

4.0 Low voltage (600 v or less) compressor motors have (6) 5/8 in. terminal studs (lead connectors not supplied by Carrier). Either 3 or 6 conductors must be run between compressor motor and starter, depending on the size of the conductors or the type of motor starter employed. If only 3 leads are utilized, jumper motor terminals as follows: 1 to 6, 2 to 4, 3 to 5. Center to center distance between terminals is 3-5/32 inches.

4.1 Power conductor rating must meet minimum unit nameplate voltage and compressor motor RLA. Refer to the label located on the side of the chiller control panel, equipment submittal documentation or equipment product data catalog for conductor sizing data. (Conductor as defined below may be a single lead or multiple smaller ampacity leads in parallel for the purpose of carrying the equivalent or higher current of a single larger lead.)

When 3 conductors are used:

Minimum ampacity per conductor = 1.25 x compressor RLA

When 6 conductors are used:

Minimum ampacity per conductor = 0.721 x compressor RLA

4.2 When more than one conduit is used to run conductors from starter to compressor motor terminal box, an equal number of leads from the following phases (conductor) must be installed in each conduit to prevent excessive heating.
Inside delta starters: 1, 3, or multiples of 3 conduits are required. (For example: conductors to motor terminals 1, 2, 3, 4, 5 and 6 in a single conduit or conductors to motor terminals 1 and 4 in one conduit, conductors to motor terminals 2 and 5 in one conduit and conductors to motor terminals 3 and 6 in one conduit.)
For all other starters: 1, 2, or multiples of 2 are required. (For example: conductors to motor terminals 1, 2, and 3 in one conduit, and conductors to motor terminals 4, 5, and 6 in one conduit.)

4.3 Compressor motor power conductors may enter terminal box through top, left side or bottom left using holes cut by contractor to suit conduit. Flexible conduit should be used for the last few feet to the terminal box for unit vibration isolation. Use of stress cones or 12 conductors larger than 500 MCM may require an oversize (special) motor terminal box (not supplied by Carrier). Lead connections between 3-phase motors and their starters must not be insulated until Carrier personnel have checked compressor and oil pump rotations.

4.4 Compressor motor frame to be grounded in accordance with the National Electrical Code (NFPA-70) and applicable codes. Means for grounding compressor motor is pressure connector for #4 AWG to 500 MCM wire, supplied and located in the lower left side corner of the compressor motor terminal box.

4.5 Do not allow motor terminals to support weight of wire cables. Use cable supports and strain reliefs as required.

4.6 Use backup wrench when tightening lead connectors to motor terminal studs. Torque to 45 lb-ft max. Use the instructions provided in the Startup and Operations Manual for additional detail for wire connections to the motor terminals.

NOTES FOR Fig. 55
19XR2-E with Free-Standing Low Voltage VFD

I. GENERAL

1.0 Variable frequency drive (VFD) shall be designed and manufactured in accordance with Carrier Engineering Requirement Z-416.

1.1 All field-supplied conductors, devices, and the field-installation wiring, termination of conductors and devices, must be in compliance with all applicable codes and job specifications.

⚠ CAUTION

To prevent damage to machine, do NOT punch holes or drill into the top surface of the VFD enclosure for field wiring. Knockouts are provided on the side of the VFD enclosure for field wiring connections.

1.2 The routing of field-installed conduit and conductors and the location of field-installed devices must not interfere with equipment access or the reading, adjusting, or servicing of any component.

1.3 Equipment installation and all starting and control devices, must comply with details in equipment submittal drawings and literature.

1.4 Contacts and switches are shown in the position they would assume with the circuit de-energized and the chiller shut down.

1.5 WARNING — Do not use aluminum conductors.

1.6 Installer is responsible for any damage caused by improper wiring between VFD and machine.

1.7 All field-installed wiring is field-supplied.

II. POWER WIRING TO VFD

2.0 Provide a local means of disconnecting power to VFD.

2.1 Lug adapters may be required if installation conditions dictate that conductors be sized beyond the minimum ampacity required. Refer to VFD dimensional drawings for lug information.

2.2 Compressor motor and controls must be grounded by using equipment grounding lugs provided inside VFD enclosure.

III. CONTROL WIRING

3.0 Field supplied control conductors to be at least 18 AWG or larger. It is recommended to connect all input/output field control wiring to Carrier Input/Output boards (IOBs) inside Carrier control panel.

3.1 Optional input device contacts must have 24 VAC rating. MAX current is 60 mA, nominal current is 10 mA. The field wiring should be designed/installed in such a manner as to prevent electrical noise from being introduced into the chiller controller. Switches with gold plated bifurcated contacts are recommended.

3.2 Each integrated contact output can control loads (VA) for evaporator pump, condenser pump, tower fan low, tower fan high, and alarm annunciator devices rated 1 amp AC RMS steady-state and 4 amps surge. Coil voltage of relay is 24 vac. Be sure to use pilot relays to avoid damage to the IOBs. Suggested rating of pilot relay is 10 amps; for example, 19XV05005503. For water pump control, either hardwire from chiller controls or alternatively the chiller controls must be interlocked with the building automation system so chiller controls can start/stop the water flow.

3.3 Factory provides pilot relays CHWP and CHWP for field water pump connections.

⚠ CAUTION

Control wiring for Carrier to start water pumps and establish flows must be provided to assure machine protection. If primary pump, tower fan, and flow control is by other means, also provide parallel means for control by Carrier. Failure to do so could result in machine freeze-up or overpressure and loss of warranty.

Do not use control transformers in the control center as the power source for external or field-supplied contactor coils, actuator motors or any other loads.

3.4 Do not route control wiring carrying 30-v or less within a conduit which has wires carrying 50-v or higher or along side wires carrying 50-v or higher.

3.5 Control wiring between starter and power panel must be separate shielded cables with minimum rating 60-v, 80°C. Ground shield at starter.

3.6 If optional pumpout/oil pump circuit breaker is not supplied within the starter enclosure, it must be located within sight of machine with wiring routed to suit.

3.7 When providing conductors for oil pump motor and oil heater power, refer to sizing data on label located on the chiller power panel, equipment submittal documentation or equipment product data catalog.

3.8 Head Pressure 4-20 mA output signal is designed for controllers with a non-grounded 4-20 mA input signal and a maximum input impedance of 500 ohms.

IV. POWER WIRING BETWEEN FREE-STANDING VFD AND COMPRESSOR MOTOR

4.0 Low voltage (600-v or less) compressor motors have (6) 5/8 in. terminal studs with 19XR frame 2 and 3 compressor or (6) 7/8 -in. terminal studs with 19XR frame 4 and 5 compressor (lead connectors not supplied by Carrier). Either 3 or 6 leads must be run between compressor motor and VFD, depending on the size of the conductors or the type of motor starter employed. If only 3 leads are utilized, jumper motor terminals as follows: 1 to 6, 2 to 4, 3 to 5. Center to center distance between frame 2 and 3 compressor terminals is 3-5/32 inches. Center to center distance between frame 4 and 5 compressor terminals is 4-13/16 inches. Compressor motor VFD must have nameplate stamped as to conforming with Carrier Engineering requirement "Z-416."

4.1 Power conductor rating must meet minimum unit nameplate voltage and compressor motor RLA. Refer to the label located on the side of the chiller control panel, equipment submittal documentation or equipment product data catalog for conductor sizing data. (Conductor as defined below may be a single lead or multiple smaller ampacity leads in parallel for the purpose of carrying the equivalent or higher current of a single larger lead.)

When 3 conductors are used:

Minimum ampacity per conductor = 1.25 x compressor RLA

When 6 conductors are used:

Minimum ampacity per conductor = 1.25 x compressor RLA / 2.

4.2 When more than one conduit is used to run conductors from VFD to compressor motor terminal box, an equal number of leads from each phase (conductor) must be in each conduit to prevent excessive heating. (For example, conductors to motor terminals 1, 2, and 3 in one conduit, and conductors to motor terminals 4, 5, and 6 in another.)

4.3 Compressor motor power conductors may enter terminal box through top, left side or bottom left using holes cut by contractor to suit conduit. Flexible conduit should be used for the last few feet to the terminal box for unit vibration isolation. Use of stress cones or 12 conductors larger than 500 MCM may require an oversize (special) motor terminal box (not supplied by Carrier). Lead connections between 3-phase motors and VFD must not be insulated until Carrier personnel have checked compressor and oil pump rotations.

4.4 Compressor motor frame to be grounded in accordance with the National Electrical Code (NFPA-70) and applicable codes. Means for grounding compressor motor is a pressure connector for #4 AWG to wire, supplied and located in the lower left side corner of the compressor motor terminal box.

4.5 Do not allow motor terminals to support weight of wire cables. Use cable supports and strain reliefs as required.

4.6 Use backup wrench when tightening lead connectors to motor terminal studs. Torque to 45 lb-ft max. Use the instructions provided in the Startup and Operations Manual for additional detail for wire connections to the motor terminals.

4.7 Do not exceed 100 ft. maximum power cable length between the VFD and motor terminals without consulting Carrier for special requirements.

NOTES FOR Fig. 55
19XR2-E with Free-Standing Starter (Medium Voltage)

I. GENERAL

1.0 Starters shall be designed and manufactured in accordance with Carrier Engineering Requirement Z-415.

1.1 All field-supplied conductors, devices, and the field installation wiring, termination of conductors and devices, must be in compliance with all applicable codes and job specifications.

⚠ CAUTION

To prevent damage to machine, do NOT punch holes or drill into the top surface of the starter enclosure for field wiring. Knockouts are provided on the side of the starter enclosure for field wiring connections.

1.2 The routing of field-installed conduit and conductors and the location of field-installed devices must not interfere with equipment access or the reading, adjusting, or servicing of any component.

1.3 Equipment installation and all starting and control devices, must comply with details in equipment submittal drawings and literature.

1.4 Contacts and switches are shown in the position they would assume with the circuit de-energized and chiller shutdown.

1.5 WARNING — Do not use aluminum conductors.

1.6 Installer is responsible for any damage caused by improper wiring between starter and machine.

1.7 All field-installed wiring is field-supplied.

II. POWER WIRING TO STARTER

2.0 Provide a means of disconnecting power to starter.

2.1 Lug adapters may be required if installation conditions dictate that conductors be sized beyond the minimum ampacity required. Contact starter supplier for lug information.

2.2 Compressor motor and controls must be grounded by using equipment grounding lug provided inside starter enclosure.

III. CONTROL WIRING

3.0 Field supplied control conductors to be at least 18 AWG or larger. It is recommended to connect all input/output field control wiring to Carrier Input/Output boards (IOBs) inside Carrier control panel.

3.1 Optional Input device contacts (devices not supplied by Carrier), must have 24 VAC rating. MAX current is 60 mA, nominal current is 10 mA. The field wiring should be designed/installed in such a manner as to prevent electrical noise from being introduced into the chiller controller. Switches with gold plated bifurcated contacts are recommended.

3.2 Each integrated contact output can control loads (VA) for evaporator pump, condenser pump, tower fan low, tower fan high, and alarm annunciator devices rated 1 amp AC RMS steady-state and 4 amps surge. Coil voltage of relay is 24 vac. Be sure to use pilot relays to avoid damage to the IOBs. Suggested rating of pilot relay is 10 amps; for example, 19XV05005503. For water pump control, either hardwire from chiller controls or alternatively the chiller controls must be interlocked with the building automation system so chiller controls can start/stop the water flow.

3.3 Factory provides pilot relays CHWP and CHWP for field water pump connections..

⚠ CAUTION

Control wiring for Carrier to start water pumps and establish flows must be provided to assure machine protection. If primary pump, tower fan, and flow control is by other means, also provide parallel means for control by Carrier. Failure to do so could result in machine freeze-up or overpressure and loss of warranty.

Do not use control transformers in the control center as the power source for external or field-supplied contactor coils, actuator motors or any other loads.

3.4 Do not route control wiring carrying 30-v or less within a conduit which has wires carrying 50-v or higher or along side wires carrying 50-v or higher.

3.5 Control wiring between starter and power panel must be separate shielded cables with minimum rating 600-v, 80°C. Ground shield at starter.

3.6 If optional pumpout/oil pump circuit breaker is not supplied within the starter enclosure, it must be located within sight of machine with wiring routed to suit.

3.7 When providing conductors for oil pump motor and oil heater power, refer to sizing data on label located on the chiller power panel, equipment submittal documentation or equipment product data catalog.

3.8 Head Pressure 4-20 mA output signal is designed for controllers with a non-grounded 4-20 mA input signal and a maximum input impedance of 500 ohms.

3.9 For Benshaw MX3 starters, use Belden 3106A (RS-485 cable) for the communication cable between Carrier power panel and Benshaw starter (Modbus communication).

IV. POWER WIRING BETWEEN FREE-STANDING STARTER AND COMPRESSOR MOTOR

4.0 Medium voltage (over 600 volts) compressor motors have (3) terminals. Connections are 9/16-in. threaded stud. Use the 3 supplied adapters for a NEMA lug size connection. These connectors ensure adequate electrical contact between stud and field wiring. Use suitable connectors and insulation for high voltage alternating current cable terminations (these items are not supplied by Carrier). Compressor motor starter must have nameplate stamped as to conforming with Carrier Engineering requirement "Z-415."

4.1 Power conductor rating must meet minimum unit nameplate voltage and compressor motor RLA. Refer to the label located on the side of the chiller control panel, equipment submittal documentation or equipment product data catalog for conductor sizing data. (Conductor as defined below may be a single lead or multiple smaller ampacity leads in parallel for the purpose of carrying the equivalent or higher current of a single larger lead.)

When 3 conductors are used:

Minimum ampacity per conductor = 1.25 x compressor RLA

4.2 When more than one conduit is used to run conductors from starter to compressor motor terminal box, an equal number of leads from each phase (conductor) must be in each conduit to prevent excessive heating. (For example, conductors to motor terminals 1, 2, and 3 in one conduit, and those to 4, 5, and 6 in another.)

4.3 Compressor motor power conductors may enter terminal box through top, left side or bottom left using holes cut by contractor to suit conduit. Flexible conduit should be used for the last few feet to the terminal box for unit vibration isolation. Use of stress cones may require an oversize (special) motor terminal box (not supplied by Carrier).

4.4 Compressor motor frame to be grounded in accordance with the National Electrical Code (NFPA-70) and applicable codes. Means for grounding compressor motor is a #4 AWG to 500 MCM pressure connector, supplied and located in the lower left side corner of the compressor motor terminal box.

4.5 Do not allow motor terminals to support weight of wire cables. Use cable supports and strain reliefs as required.

4.6 Use backup wrench when tightening lead connectors to motor terminal studs. Torque to 30-35 ft-lb max. Use the instructions provided in the Startup and Operations Manual for additional detail for wire connections to the motor terminals.

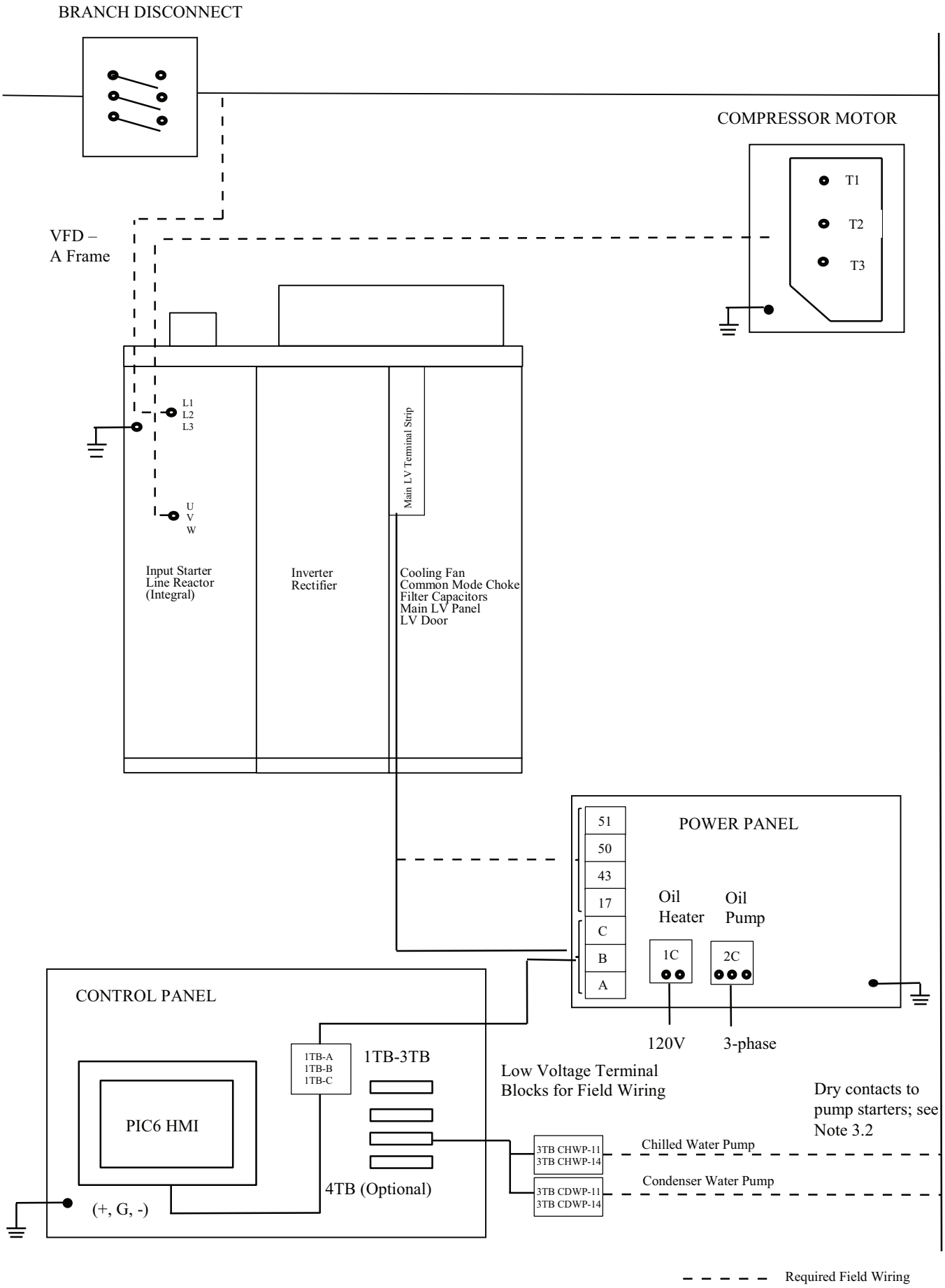

Fig. 56 — 19XRC and E Typical Field Wiring with Free-Standing Medium-Voltage VFD

NOTES FOR FIG. 56
19XRC and E with Free-Standing Medium Voltage VFD

I. GENERAL

1.0 Variable Frequency Drive (VFD) shall be designed and manufactured in accordance with Carrier Engineering Requirement Z-416.

1.1 All field-supplied conductors, devices, and the field installation wiring, termination of conductors and devices, must be in compliance with all applicable codes and job specifications.

⚠ CAUTION

To prevent damage to machine, do NOT punch holes or drill into the top surface of the VFD enclosure for field wiring. Field wiring knockouts are provided on the top and side of the VFD enclosure for field wiring connections.

1.2 The routing of field-installed conduit and conductors and the location of field-installed devices must not interfere with equipment access or the reading, adjusting, or servicing of any component.

1.3 Equipment installation and all starting and control devices, must comply with details in equipment submittal drawings and literature.

1.4 Contacts and switches are shown in the position they would assume with the circuit de-energized and chiller shutdown.

1.5 WARNING - Do not use aluminum conductors.

1.6 Installer is responsible for any damage caused by improper wiring between VFD and machine.

1.7 All field-installed wiring is field-supplied.

II. POWER WIRING TO VFD

2.0 Provide a means of disconnecting power to VFD.

2.1 Lug adapters may be required if installation conditions dictate that conductors be sized beyond the minimum ampacity required. Contact VFD supplier for lug information.

2.2 Compressor motor and controls must be grounded by using equipment grounding lug provided inside VFD enclosure.

III. CONTROL WIRING

3.0 Field supplied control conductors to be at least 18 AWG or larger. It is recommended to connect all input/output field control wiring to Carrier Input/Output boards (IOBs) inside Carrier control panel.

3.1 Optional controls Input device contacts (devices not supplied by Carrier), must have 24 VAC rating. MAX current is 60 mA, nominal current is 10 mA. The field wiring should be designed/installed in such a manner as to prevent electrical noise from being introduced into the chiller controller. Switches with gold plated bifurcated contacts are recommended.

3.2 Each integrated contact output can control loads (VA) for evaporator pump, condenser pump, tower fan low, tower fan high, and alarm annunciator devices rated 1 amp AC RMS steady-state and 4 amps surge. Coil voltage of relay is 24 vac. Be sure to use pilot relays to avoid damage to the IOBs. Suggested rating of pilot relay is 10 amps; for example, 19XV05005503. For water pump control, either hardwire from chiller controls or alternatively the chiller controls must be interlocked with the building automation system so chiller controls can start/stop the water flow.

3.3 Factory provides pilot relays CHWP and CHWP for field water pump connections..

⚠ CAUTION

Control wiring for Carrier to start water pumps and establish flows must be provided to assure machine protection. If primary pump, tower fan, and flow control is by other means, also provide parallel means for control by Carrier. Failure to do so could result in machine freeze-up or overpressure and loss of warranty.

Do not use control transformers in the control center as the power source for external or field-supplied contactor coils, actuator motors or any other loads.

3.4 Do not route control wiring carrying 30-v or less within a conduit which has wires carrying 50-v or higher or along side wires carrying 50-v or higher.

3.5 Control wiring between VFD and power panel must be separate shielded cables with minimum rating 600-v, 80°C. Ground shield at VFD.

3.6 If optional pumpout/oil pump circuit breaker is not supplied within the starter enclosure, it must be located within sight of machine with wiring routed to suit.

3.7 When providing conductors for oil pump motor and oil heater power, refer to sizing data on label located on the chiller power panel, equipment submittal documentation or equipment product data catalog.

3.8 Head Pressure 4-20 mA output signal is designed for controllers with a non-grounded 4-20 mA input signal and a maximum input impedance of 500 ohms.

IV. POWER WIRING BETWEEN FREE-STANDING VFD AND COMPRESSOR MOTOR

4.0 Medium voltage (over 600 volts) compressor motors have (3) terminals. Connections are 9/16-in. threaded stud. A compression lug with a single 9/16-in. diameter hole can be connected directly to the stud or 3 adapters are supplied for connecting a NEMA lug. Use suitable connectors and insulation for high voltage alternating current cable terminations (these items are not supplied by Carrier).

4.1 Power conductor rating must meet minimum unit nameplate voltage and compressor motor RLA. Refer to the label located on the side of the chiller control panel, equipment submittal documentation or equipment product data catalog for conductor sizing data. (Conductor as defined below may be a single lead or multiple smaller ampacity leads in parallel for the purpose of carrying the equivalent or higher current of a single larger lead.)

When 3 conductors are used:

Minimum ampacity per conductor = 1.25 x compressor RLA

When 6 conductors are used:

Minimum ampacity per conductor = 1.25 x compressor RLA/2

4.2 When more than one conduit is used to run conductors from VFD to compressor motor terminal box, an equal number of leads from each phase (conductor) must be in each conduit to prevent excessive heating. (For example, conductors to motor terminals 1, 2, and 3 in one conduit, and to 1, 2, and 3 in another conduit.)

4.3 Compressor motor power conductors may enter terminal box through top, left side or bottom left using holes cut by contractor to suit conduit. Flexible conduit should be used for the last few feet to the terminal box for unit vibration isolation. Use of stress cones may require an oversize (special) motor terminal box (not supplied by Carrier).

4.4 Compressor motor frame to be grounded in accordance with the National Electrical Code (NFPA-70) and applicable codes. Means for grounding compressor motor is a #4 AWG to 500 MCM pressure connector, supplied and located in the lower left side corner of the compressor motor terminal box.

4.5 Do not allow motor terminals to support weight of wire cables. Use cable supports and strain reliefs as required.

4.6 Use backup wrench when tightening lead connectors to motor terminal studs. Torque to 30-35 ft-lb max. Use the instructions provided in the Startup and Operations Manual for additional detail for wire connections to the motor terminals.

4.7 Do not exceed 100 ft. maximum power cable length between the VFD and motor terminals without consulting Carrier for special requirements.

LEGEND FOR Fig. 57
19XR2-E Chiller Control Schematic

1-4IOB	—	Carrier Input Output Board 1-4
1-4TB	—	Terminal Block 1-4
1C	—	Oil Heater Contactor
1CB	—	Circuit Breaker 1
1FU	—	Fuse, 5A
2C	—	Oil Pump Contactor
2FU	—	Fuse, 10A
3C	—	EC Valve Solenoid Open Relay
ALE	—	Chiller Alert Relay
ALM	—	Chiller Alarm Relay
AUTO_DEM	—	Auto Demand Limit Input
AUTO_RES	—	Auto Water Temp Reset
CB2/3	—	Circuit Breaker 2/3
CDW_DP	—	Cond Water Pressure Difference
CDWP	—	Condenser Water Pump
CDWP_V	—	Condenser Water Pump (Variable Speed)
CHRS	—	Chiller Run Status
CHST_OUT	—	Chiller Status Output mA
CHW_DP	—	Chilled Water Pressure Difference
CHWP	—	Chilled Water Pump
CHWP_V	—	Chilled Water Pump (Variable Speed)
CHWR_T	—	Common Chilled Water Return Temperature
CHWS_T	—	Common Chilled Water Supply Temperature
COND_EWP	—	Entering Cond Water Pressure
COND_FL	—	Cond Water Flow Measurement
COND_FS	—	Cond Water Flow Switch
COND_LH	—	Cond Sump Level High
COND_LL	—	Cond Sump Level Low
COND_LWP	—	Leaving Cond Water Pressure
COND_P	—	Condenser Pressure
CUS_ALE	—	Customer Alert
DGT	—	Compressor Discharge Temperature
DIFF_OUT	—	Diffuser Output
DIFF_P	—	Diffuser Pressure
E_STOP	—	Remote Emergency Stop Input
EC VALVE	—	Envelope Control Valve
ECDW	—	Entering Condenser Water Temperature
ECON_P	—	Economizer Pressure
ECW	—	Entering Chilled Water Temperature
EVAP_EWP	—	Evaporator Entering Water Pressure
EVAP_FL	—	Evap Water Flow Measurement
EVAP_FS	—	Evap Water Flow Switch
EVAP_LWP	—	Evaporator Leaving Water Pressure
EVAP_P	—	Evaporator Pressure
EVAP_T	—	Evap Refrigerant Liquid Temperature
FC_MODE	—	Free Cooling Mode
FC_SS	—	Free Cooling Start Switch
FS_LOCK	—	Fire Security Interlock
GV1_DEC	—	Stage 1 IGV Decrease
GV1_INC	—	Stage 1 IGV Increase
GV1_OUT	—	Guide Vane 1 Output
GV1_POS	—	Guide Vane 1 Actual Position
HDPV_OUT	—	Head Pressure Output
HGBP_MA	—	EC Valve Feedback
HGBP_OP	—	EC Valve Solenoid/Open
HGBP_OUT	—	EC Valve Output mA
HGBP_VLV	—	Hot Gas Bypass Valve
HMI	—	Human Machine Interface (Touch Screen)
HP_SW	—	High Pressure Switch
HR_EWT	—	Heat Reclaim Entering Temperature
HR_LWT	—	Heat Reclaim Leaving Temperature

Power Panel Terminal Block
Conductor Male/Female Conductor
Crossover
Panel Wiring (Internal)
Field Wiring
Optional Wiring
Component / Panel Enclosure
Control Panel Terminal Block
Oil Pump Terminal
Wire Splice
Component Terminal
Motor Starter Panel Conn
Thermistor
Contactor / Relay Coil
Contactor Contact (N.O.)
High Pressure Switch
Pressure Transducer
Oil Heater
Circuit Breaker

BLK	Black
BLU	Blue
BRN	Brown
GRN	Green
GRY	Gray
RED	Red
WHT	White
YEL	Yellow
Y/G	Yellow/green
ORG	Orange

⚠ CAUTION

IOB contact 1 amp AC RMS steady-state and 4 amps surge. Coil voltage of relay is 24 VAC. Be sure to use pilot relays to avoid damage to the IOBs. Suggested rating of pilot relay is 10 amps; for example, 19XV05005503.

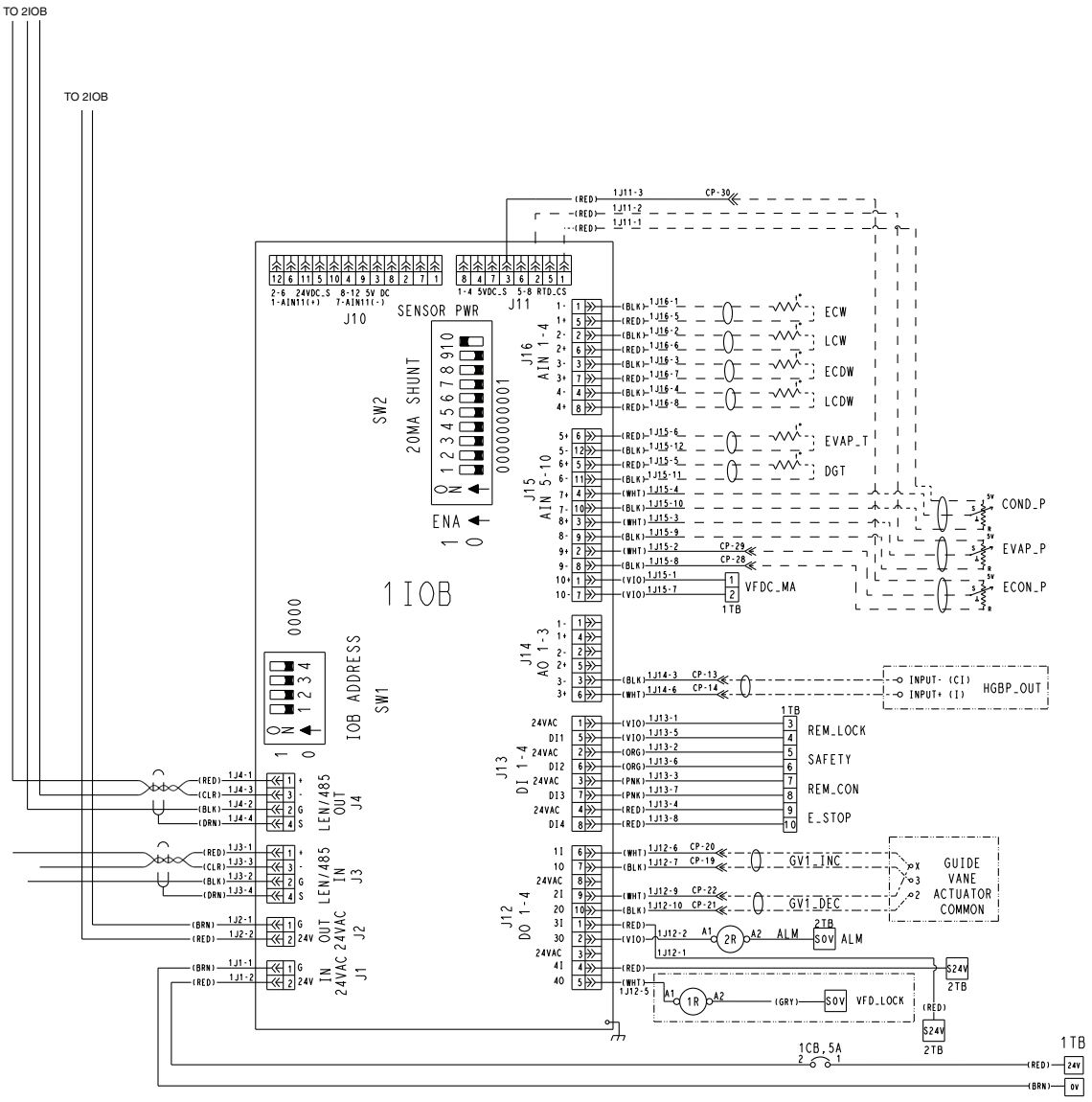

19XR05044701 REV L

Field Terminals for 1TB, Fig. 57

		DESCRIPTION	POINT NAME	TYPE	NOTES
1TB	+	Carrier Comfort Network (CCN) communication	CCN com	COM	Use for CCN communication devices.
	G				
	-				
	A	Local Equipment Network (LEN) (IOB and starter/ISM communication)	LEN com	COM	For starters with ISM or FC102 VFD. For free-standing starters field connection between ISM and control panel communication is required.
	B				
	C				
	A	Modbus Modbus com COM	LEN com	COM	For unit mounted VFDs and Benshaw freestanding starters with MX3 (no ISM).
	B				
	C				
	1	Free Standing VFD LOAD CURRENT	VFDC_MA	4-20 mA	Optional input; FS VFD load current
	2				
	3	Remote Lockout Input	REM_LOCK	24 VAC	Optional input; open/Close (dry contact); when closed chiller cannot be started
	4				
	5	Spare Safety	SAFETY	24 VAC	Optional input; Open/Close (dry contact); normally open (closed indicate safety shutdown condition.
	6				
	7	Remote Contact Input	REM_CON	24 VAC	Optional input; Open/Close (dry contact); normally open (closed indicate start chiller signal).
	8				
	9	Emergency Stop Input	E_STOP	24 VAC	Optional Input; Open/Close (dry contact); normally open (closed indicate emergency stop).
	10				
	11	CHILLER ALARM RELAY (2R)	ALM	24 VAC	Optional output; 24 VAC indicates alarm condition.
	12	Danfoss VFD Interlock (1R)	vfd_lock	24 VAC	Interlock location

Fig. 57 — 19XR2-E Chiller Control Schematic

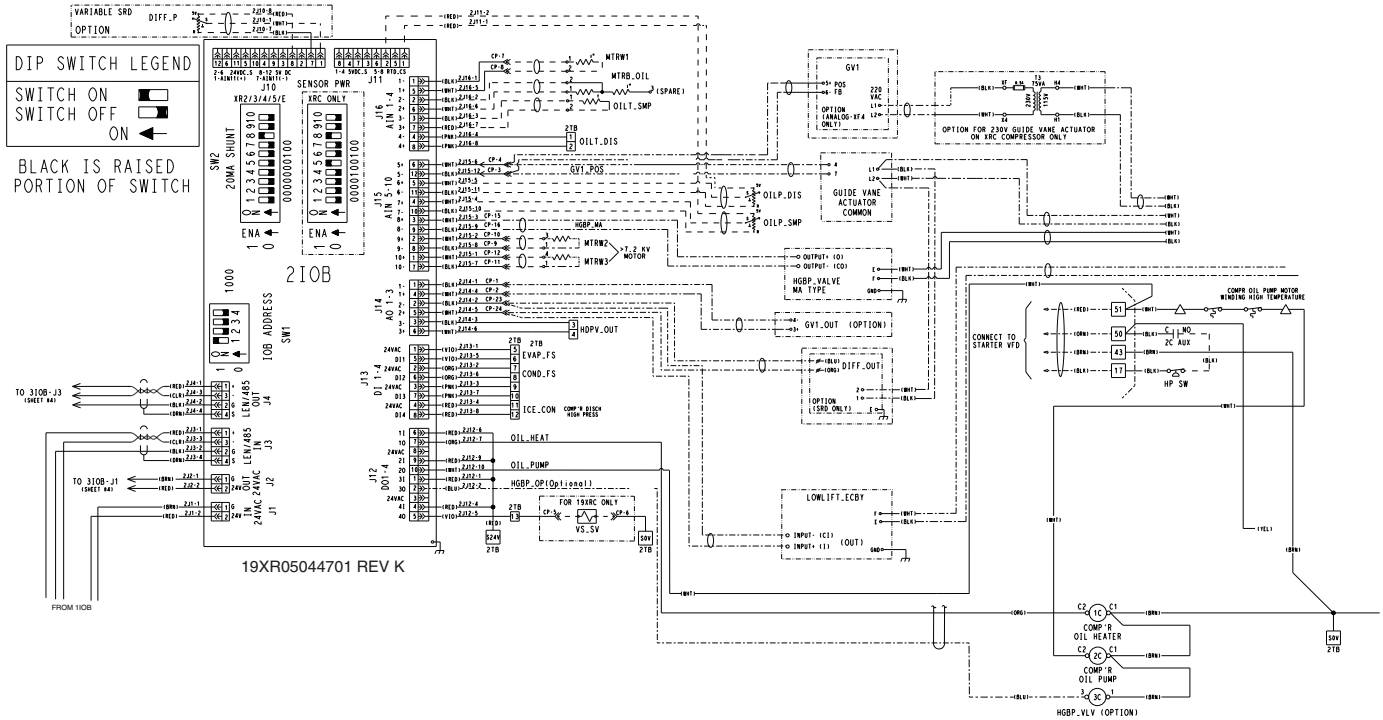

Field Terminals for 2TB, Fig. 57

		DESCRIPTION	POINT NAME	TYPE	NOTES
2TB	3	Head Pressure Output	HDPV_OUT	4-20 mA	Optional Output; If used set dip switch to On for IOB2 channel 8.
	4				
	5	Evaporator water flow switch	EVAP_FS	24 VAC	Optional Input; open/closed switch
	6				
	7	Condenser water flow switch	COND_FS	24 VAC	Optional Input; open/closed switch
	8				
	11	Ice build contact	ICE_CON	24 VAC	Optional Input; open/closed switch
	12				

Fig. 57 — 19XR2-E Chiller Control Schematic (cont)

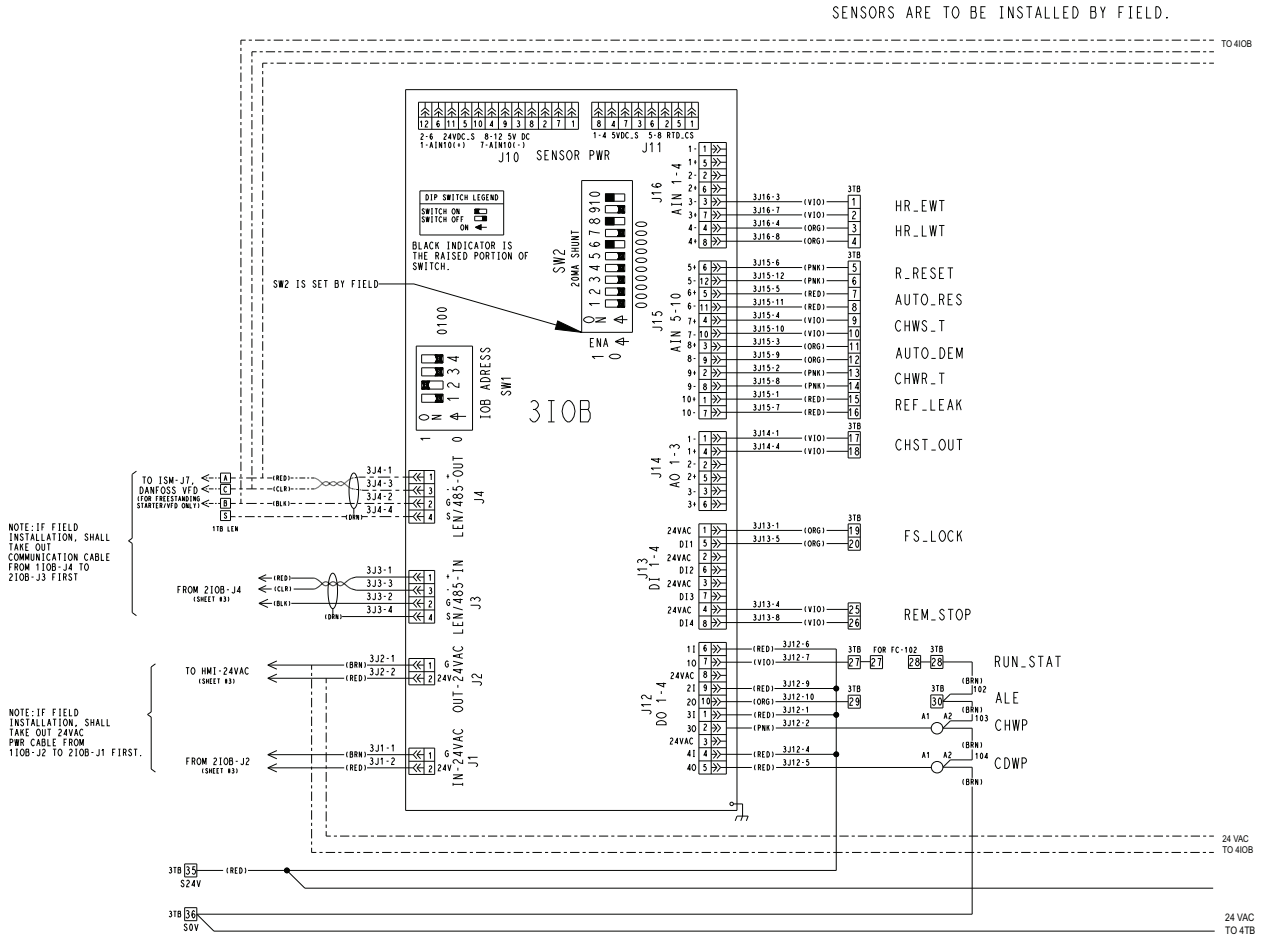

19XR05044701 REV L

Field Terminals for 3TB, Fig. 57

		DESCRIPTION	POINT NAME	TYPE	NOTES
3TB	5	Remote Reset Sensor	R_RESET	5 kOhm	Optional input
	6				
	7	Auto Water Temp Reset	AUTO_RES	4-20 mA	Optional; If used set dip switch to On for IOB3 channel 6
	8				
	9	Common Chilled Water Supply Temperature	CHWS_T	5 kOhm	Optional input
	10				
	11	Auto Demand Limit Input	AUTO_DEM	4-20 mA	Optional; If used set dip switch to On for IOB3 channel 8
	12				
	13	Common Chilled Water Return Temperature	CHWR_T	5 kOhm	Optional
	14				
	15	Refrigerant Leak Sensor	REF_LEAK	4-20 mA	Optional; If used set dip switch to On for IOB3 channel 10
	16				
	17	Chiller Status Output mA	CHST_OUT	4-20 mA	Optional; (ON=20mA, OFF=4mA, TRIPOUT=8mA, Not Off and Compressor not running=12mA)
	18				
	19	Fire Security Interlock	FS_LOCK	24 VAC	Optional Input; Normally open dry contact. If closed compressor will shut down under fire security alarm.
	20				
	21	Customer Alert	CUS_ALE	24 VAC	Optional Input; Must be enabled and alert will show on PIC if contact is not closed.
	22				
	23	Free Cooling Start Switch	FC_SS	24 VAC	Optional Input; Normally open dry contact.
	24				
	25	Remote Stop	REM_STOP	24 VAC	Optional Input; If in Remote mode and Contact=Enable, then chiller will stop when contact is closed.
	26				
	27	Chiller Run Status	RUN_STAT	24 VAC	Optional Output; Normally open dry contact
	28				
	29	Chiller Alert Relay	ALE	24 VAC	Optional Output; Normally open dry contact
	30				
3TB[a]	11	CHWP, Chilled Water Pump	CHWP	24 VAC	Output; Normally open dry contact
	14				
	11	CDWP, Condenser Water Pump	CDWP	24 VAC	Output; Normally open dry contact
	14				

NOTE(S):

a. Terminals for CHWP and CDWP refer to the terminals on the relay located on 3TB marked CHWP and CDWP respectively.

Fig. 57 — 19XR2-E Chiller Control Schematic (cont)

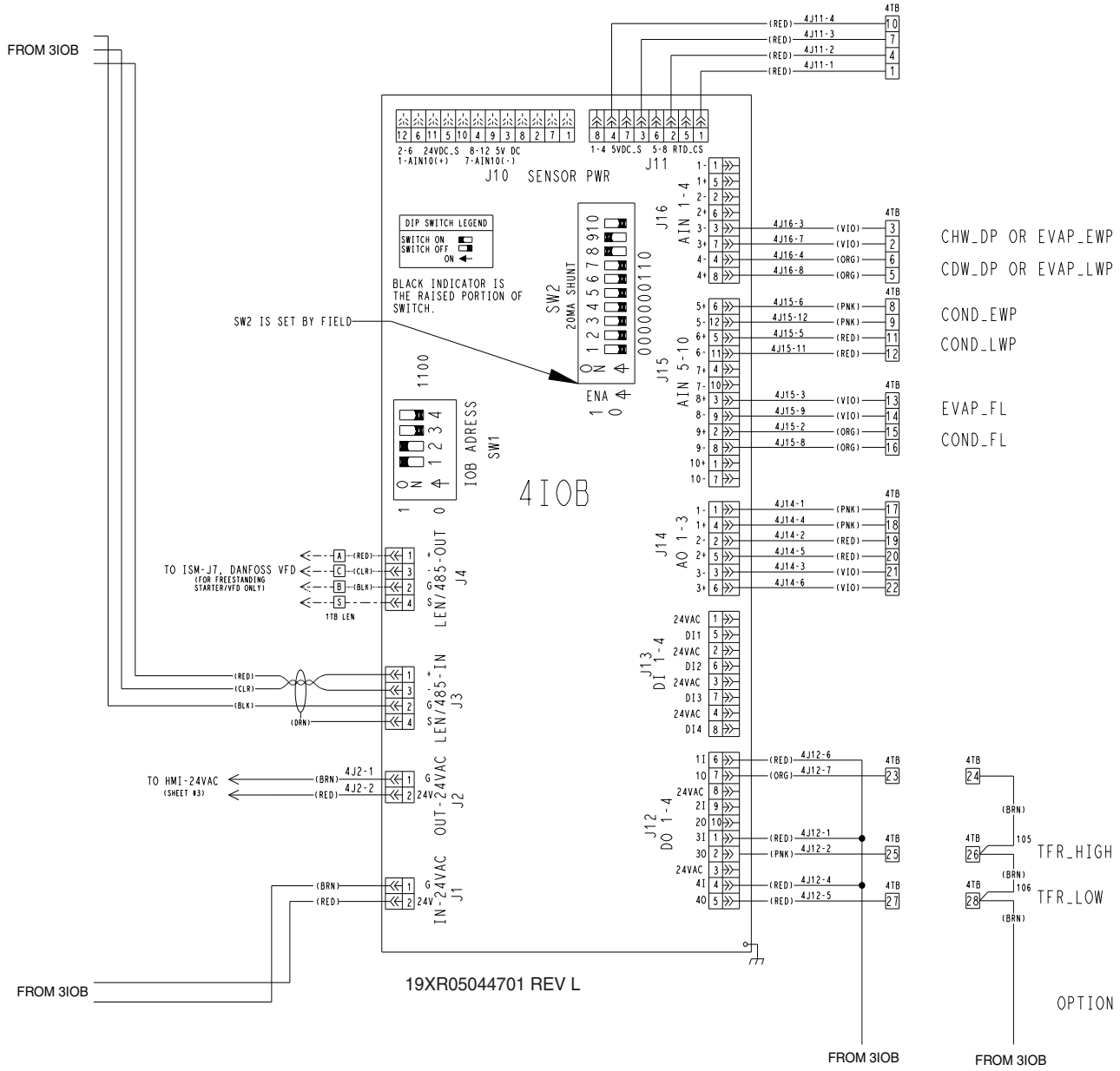

Field Terminals for 4TB, Fig. 57

		DESCRIPTION	POINT NAME	TYPE	NOTES
4TB	1	Chilled Water Pressure Difference or Evap Entering Water Pressure	CHW_DP or EVAP_EWP	5 VDC	Optional Input
	2				
	3				
	4	Condenser Water Pressure Difference or Evap Leaving Water Pressure	CDW_DP or EVAP_LWP	5 VDC	Optional Input
	5				
	6				
	7	Condenser Entering Water Pressure	COND_EWP	5 VDC	Optional Input
	8				
	9				
	10	Condenser Leaving water temperature	COND_LWP	5 VDC	Optional Input
	11				
	12				
	13	Evaporator Water Flow Measurement	EVAP_FL	4-20 mA	Optional Input; If used set dip switch to On for IOB4 channel 8
	14				
	15	Condenser Water Flow Measurement	COND_FL	4-20 mA	Optional Input; If used set dip switch to On for IOB4 channel 9
	16				
	25	Tower Fan High	TFR_HIGH	24 VAC	Optional Output; dry contact
	26				
	27	Tower Fan Low	TFR_LOW	24 VAC	Optional Output; dry contact
	28				

Fig. 57 — 19XR2-E Chiller Control Schematic (cont)

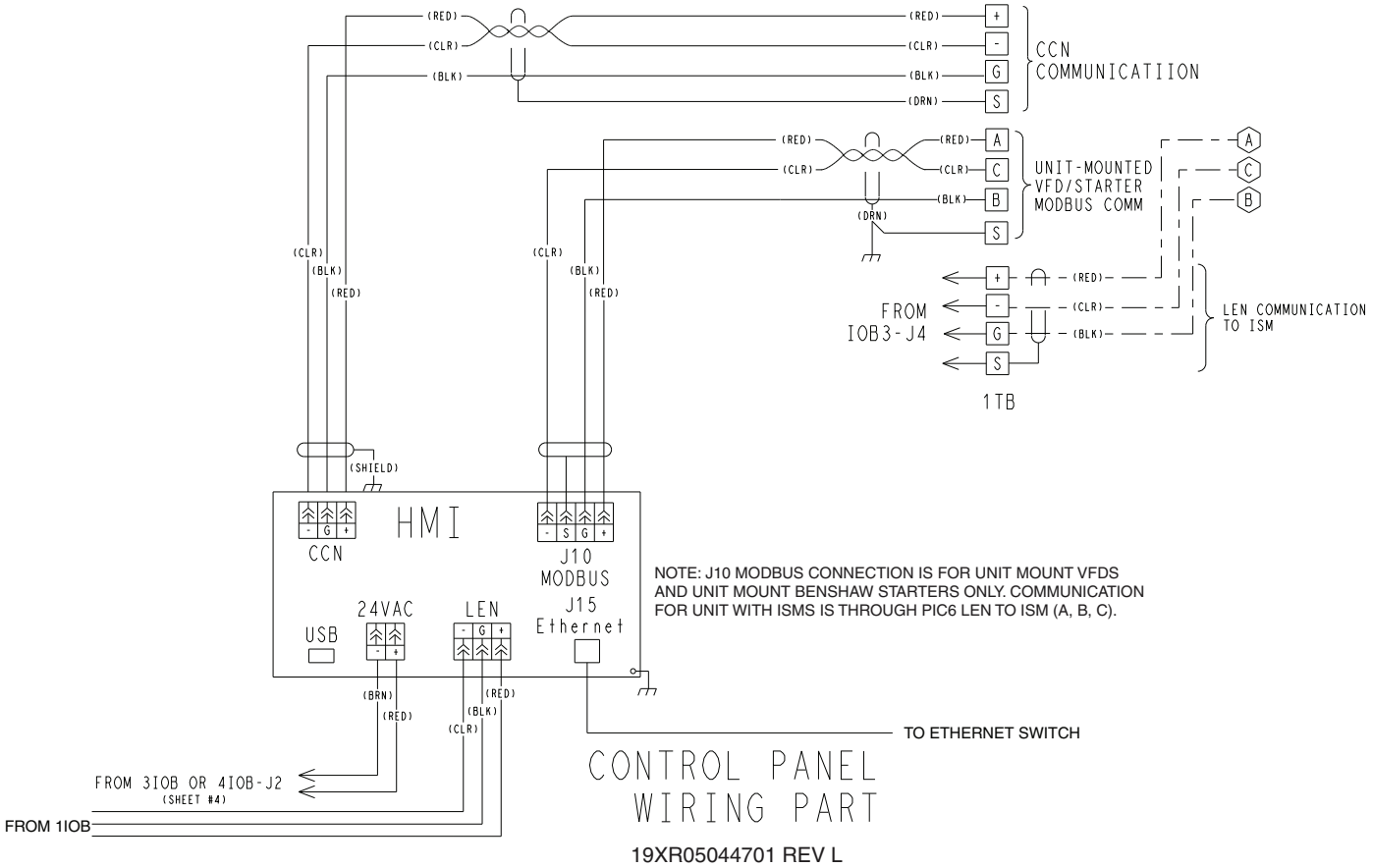

Fig. 57 — 19XR2-E Chiller Control Schematic (cont)

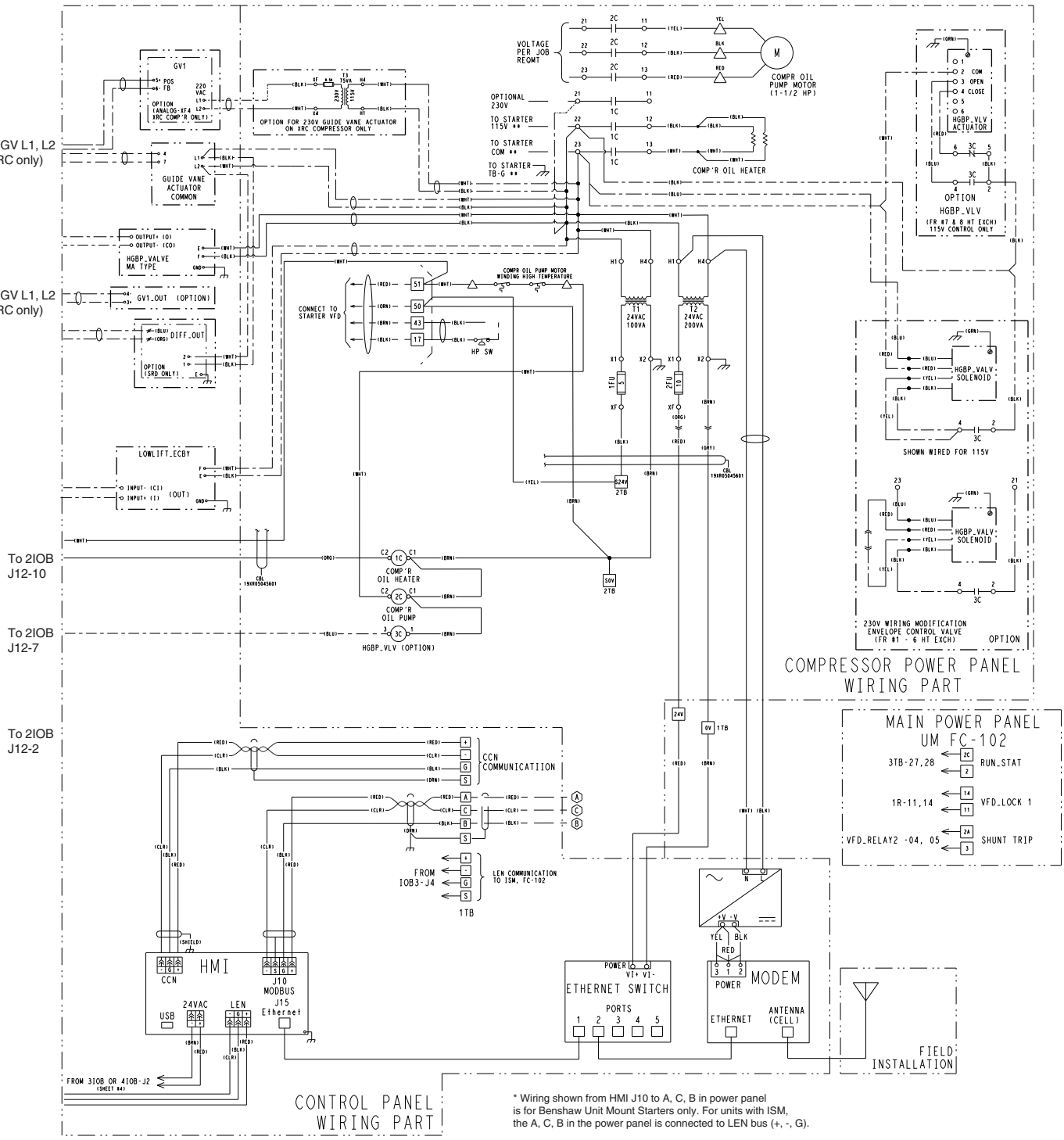

19XR05044701 REV L

Fig. 58 — 19XR2-E Chiller Control Schematic for Non-Unit Mount VFD Chiller (Fixed Speed Chiller and Free-standing VFD)

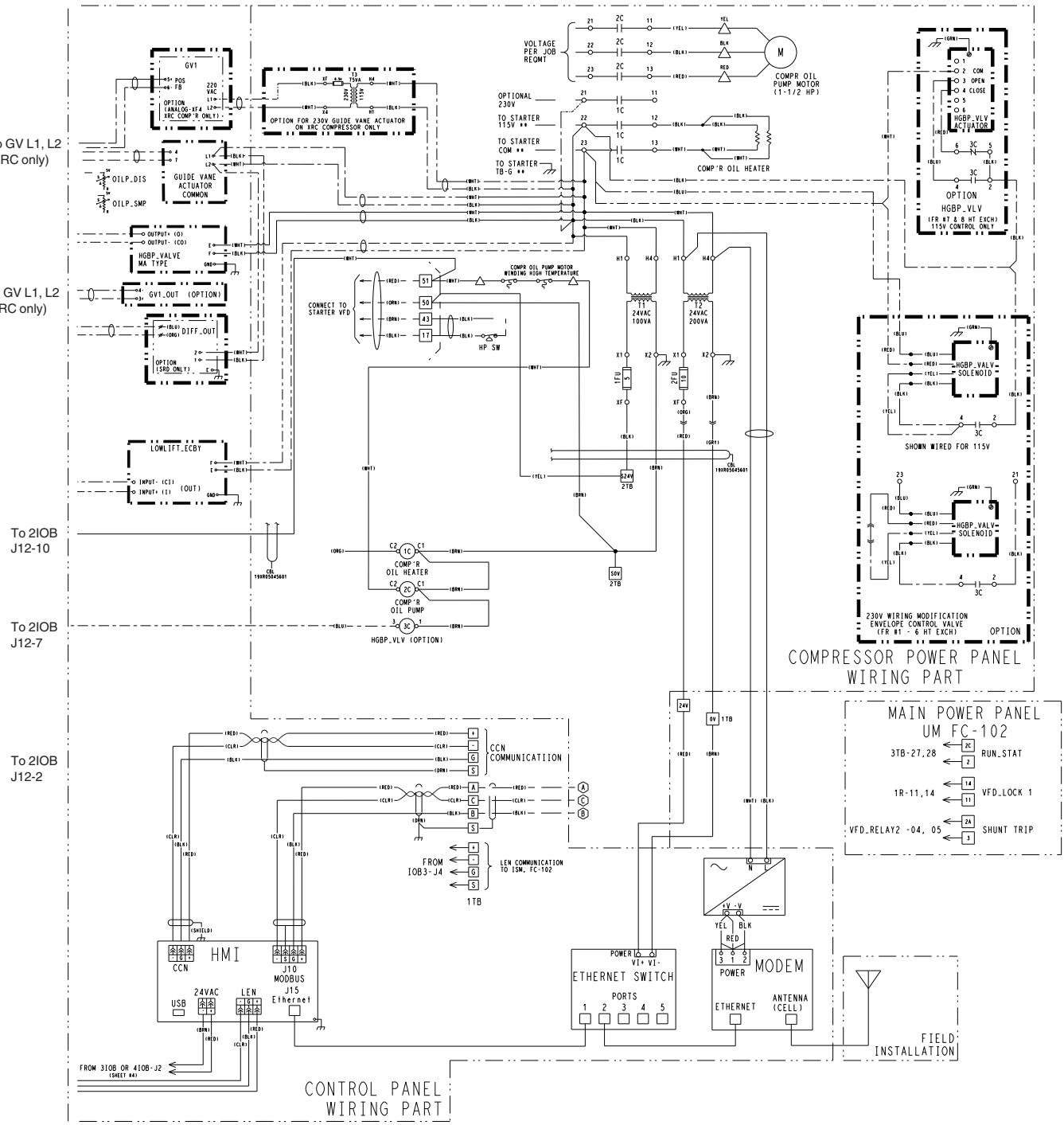

19XR05044701 REV L

Fig. 59 — 19XR2-E Chiller Control Schematic for Unit Mount VFD Chiller

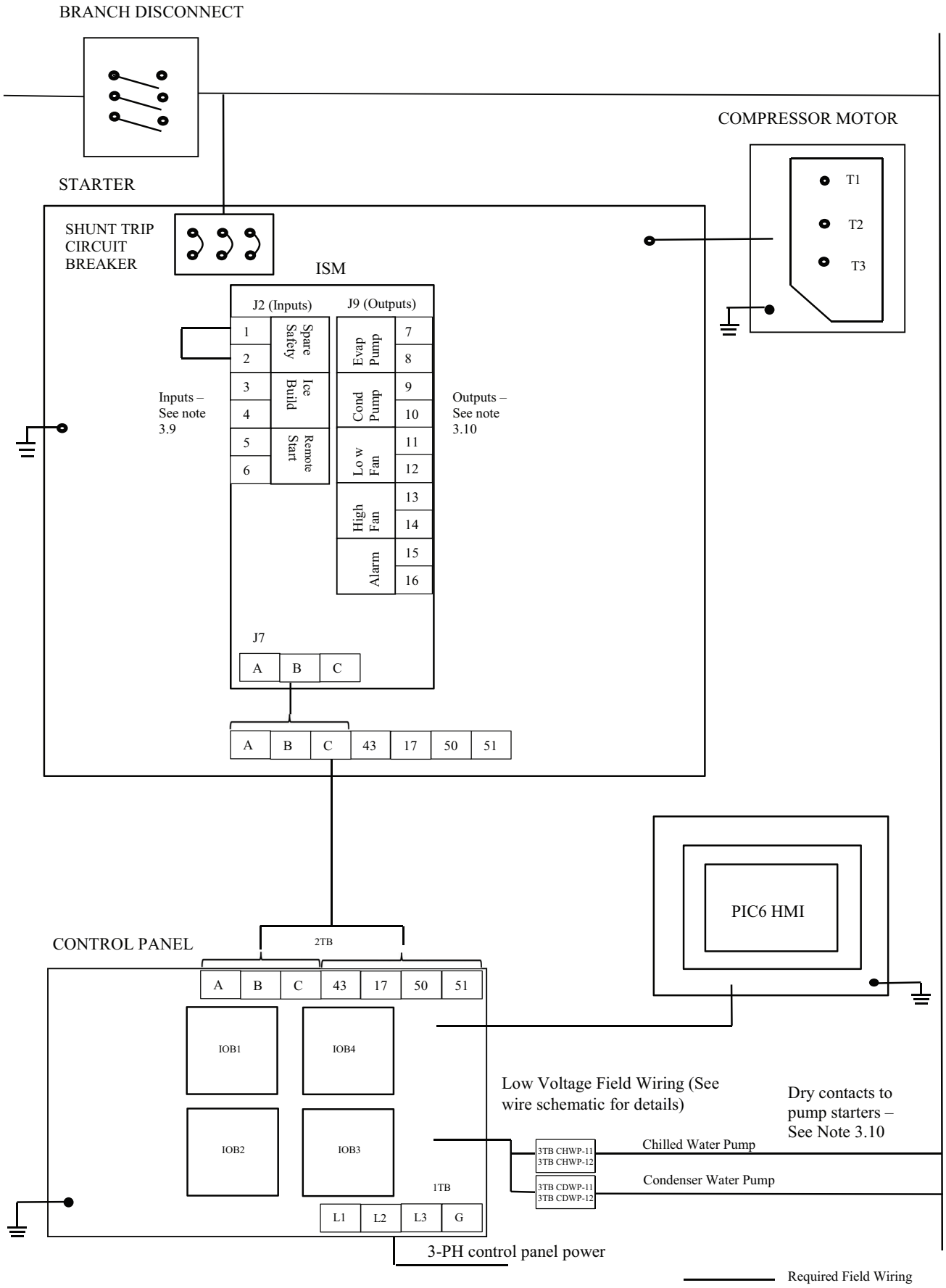

NOTES:
1. Medium Voltage Compressor has 3 motor terminals.
2. 19XR6 Low Voltage Compressor has 6 motor terminals.

Fig. 60 — 19XR6/7 Typical Field Wiring with Free-Standing Starter (Medium Voltage)

NOTES FOR Fig. 60
19XR6/7 with Free-Standing Starter or Low Voltage VFD (Low or Medium Voltage)

I. GENERAL

1.0 Starters shall be designed and manufactured in accordance with Carrier Engineering Requirement Z-415.

1.1 All field-supplied conductors, devices, and the field installation wiring, termination of conductors and devices, must be in compliance with all applicable codes and job specifications.

⚠ CAUTION

To prevent damage to machine, do NOT punch holes or drill into the top surface of the starter enclosure for field wiring. Knockouts are provided on the side of the starter enclosure for field wiring connections.

1.2 The routing of field-installed conduit and conductors and the location of field-installed devices must not interfere with equipment access or the reading, adjusting, or servicing of any component.

1.3 Equipment installation and all starting and control devices, must comply with details in equipment submittal drawings and literature.

1.4 Contacts and switches are shown in the position they would assume with the circuit de-energized and chiller shutdown.

1.5 WARNING — Do not use aluminum conductors.

1.6 Installer is responsible for any damage caused by improper wiring between starter and machine.

1.7 All field-installed wiring is field-supplied.

II. POWER WIRING TO STARTER

2.0 Provide a means of disconnecting power to starter.

2.1 Lug adapters may be required if installation conditions dictate that conductors be sized beyond the minimum ampacity required. Contact starter supplier for lug information.

2.2 Compressor motor and controls must be grounded by using equipment grounding lug provided inside starter enclosure.

III. CONTROL WIRING

3.0 Field supplied control conductors to be at least 18 AWG or larger. It is recommended to connect all input/output field control wiring to Carrier Input/Output boards (IOBs) inside Carrier control panel.

3.1 Optional Input device contacts (devices not supplied by Carrier), must have 24 VAC rating. MAX current is 60 mA, nominal current is 10 mA. The field wiring should be designed/installed in such a manner as to prevent electrical noise from being introduced into the chiller controller. Switches with gold plated bifurcated contacts are recommended.

3.2 Remove jumper wire between J2-1 and J2-2 before connecting auxiliary safeties between these terminals.

3.3 Each integrated contact output can control loads (VA) for evaporator pump, condenser pump, tower fan low, tower fan high, and alarm annunciator devices rated 5 amps at 115 VAC and up to 3 amps at 277 VAC.

⚠ CAUTION

Control wiring for Carrier to start water pumps and establish flows must be provided to assure machine protection. If primary pump, tower fan, and flow control is by other means, also provide parallel means for control by Carrier. Failure to do so could result in machine freeze-up or overpressure and loss of warranty.

Do not use control transformers in the control center as the power source for external or field-supplied contactor coils, actuator motors or any other loads.

3.4 Do not route control wiring carrying 30-v or less within a conduit which has wires carrying 50 v or higher or along side wires carrying 50-v or higher.

3.5 Control wiring between starter and power panel must be separate shielded cables with minimum rating 600-v, 80°C. Ground shield at starter.

3.6 If optional pumpout/oil pump circuit breaker is not supplied within the starter enclosure, it must be located within sight of machine with wiring routed to suit.

3.7 When providing conductors for oil pump motor and oil heater power, refer to sizing data on label located on the chiller power panel, equipment submittal documentation or equipment product data catalog.

3.8 Head Pressure 4-20 mA output signal is designed for controllers with a non-grounded 4-20 mA input signal and a maximum input impedance of 500 ohms. Output is only available from Control Panel IOB - see wiring diagram.

3.9 ISM inputs Spare Safety, Ice Build, and Remote Start are active if ISM Input Enable has been set = Enable in ***Main Menu→ Configuration→ IOB Configuration*** (default ISM Input Enable = Dsable, which means that the IOBx inputs are active - see wiring schematic).

3.10 Evap and Cond Pump, Lo and Hi Fan, and Alarm outputs are available from both J-9 ISM outputs and IOB assuming IOBx is enabled (see wiring schematic). Each integrated contact output can control loads (VA) for evaporator pump, condenser pump, tower fan low, tower fan high, and alarm annunciator devices rated 1 amp AC RMS steady-state and 4 amps surge. Coil voltage of relay is 24 vac. Be sure to use pilot relays to avoid damage to the IOBs. Suggested rating of pilot relay is 10 amps; for example, 19XV05005503.

3.11 For water pump control, either hardwire from chiller controls or alternatively the chiller controls must be interlocked with the building automation system so chiller controls can start/stop the water flow. Pilot relays are field supplied.

IV. POWER WIRING BETWEEN FREE-STANDING STARTER AND COMPRESSOR MOTOR

4.0 Low voltage (under 600 volts) compressor motors have (6) terminals. Connections are 1-1/2 in. threaded stud. Use the supplied low voltage terminal box. This terminal box allow up to four (4) lugs to be attached to each of the six (6) motor terminals. Each busbar has four (4) 0.53 in. (13.5 mm) holes spaced 1.75 in. (44.5 mm) apart. This allow for installation of up to four (4) field supplied copper compression one-hole lugs suited for a 1/2 in. stud.

Medium voltage (over 600 volts) compressor motors have (3) terminals. Connections are 9/16-in. threaded stud. Use the 3 supplied adapters for a NEMA lug size connection. These connectors ensure adequate electrical contact between stud and field wiring. Use suitable connectors and insulation for high voltage alternating current cable terminations (these items are not supplied by Carrier).

4.1 Power conductor rating must meet minimum unit nameplate voltage and compressor motor RLA. Refer to the label located on the side of the chiller control panel, equipment submittal documentation or equipment product data catalog for conductor sizing data. (Conductor as defined below may be a single lead or multiple smaller ampacity leads in parallel for the purpose of carrying the equivalent or higher current of a single larger lead.)

When 3 conductors are used:

Minimum ampacity per conductor = 1.25 x compressor RLA

4.2 For low voltage there will always be multiple leads in parallel. The quantity of conductors should be a multiple of (6) in order to balance the load for motor terminal T1-T6. When more than one conduit is used to run conductors from starter to compressor motor terminal box, an equal number of leads from each phase (conductor) must be in each conduit to prevent excessive heating. (For example, conductors to motor terminals 1, 2, and 3 in one conduit, and those to 4, 5, and 6 in another.)

4.3 Compressor motor power conductors may enter terminal box through top, left side or bottom left using holes cut by contractor to suit conduit. Flexible conduit should be used for the last few feet to the terminal box for unit vibration isolation. Use of stress cones may require an oversize (special) motor terminal box (not supplied by Carrier).

4.4 Compressor motor frame to be grounded in accordance with the National Electrical Code (NFPA-70) and applicable codes. Medium voltage means for grounding compressor motor is a #4 AWG to 500 MCM pressure connector, supplied and located in the lower left side corner of the compressor motor terminal box. Low voltage terminal box includes a grounding bus bar with eight (8) 0.56 in. (14.2 mm) through holes spaced 1.9 in. (48.3 mm) apart. Compression lug connectors are not factory supplied.

4.5 Do not allow motor terminals to support weight of wire cables. Use cable supports and strain reliefs as required.

4.6 Use backup wrench when tightening lead connectors to motor terminal studs. Torque to 30-35 ft-lb max.Use the instructions provided in the Startup and Operations Manual for additional detail for wire connections to the motor terminals.

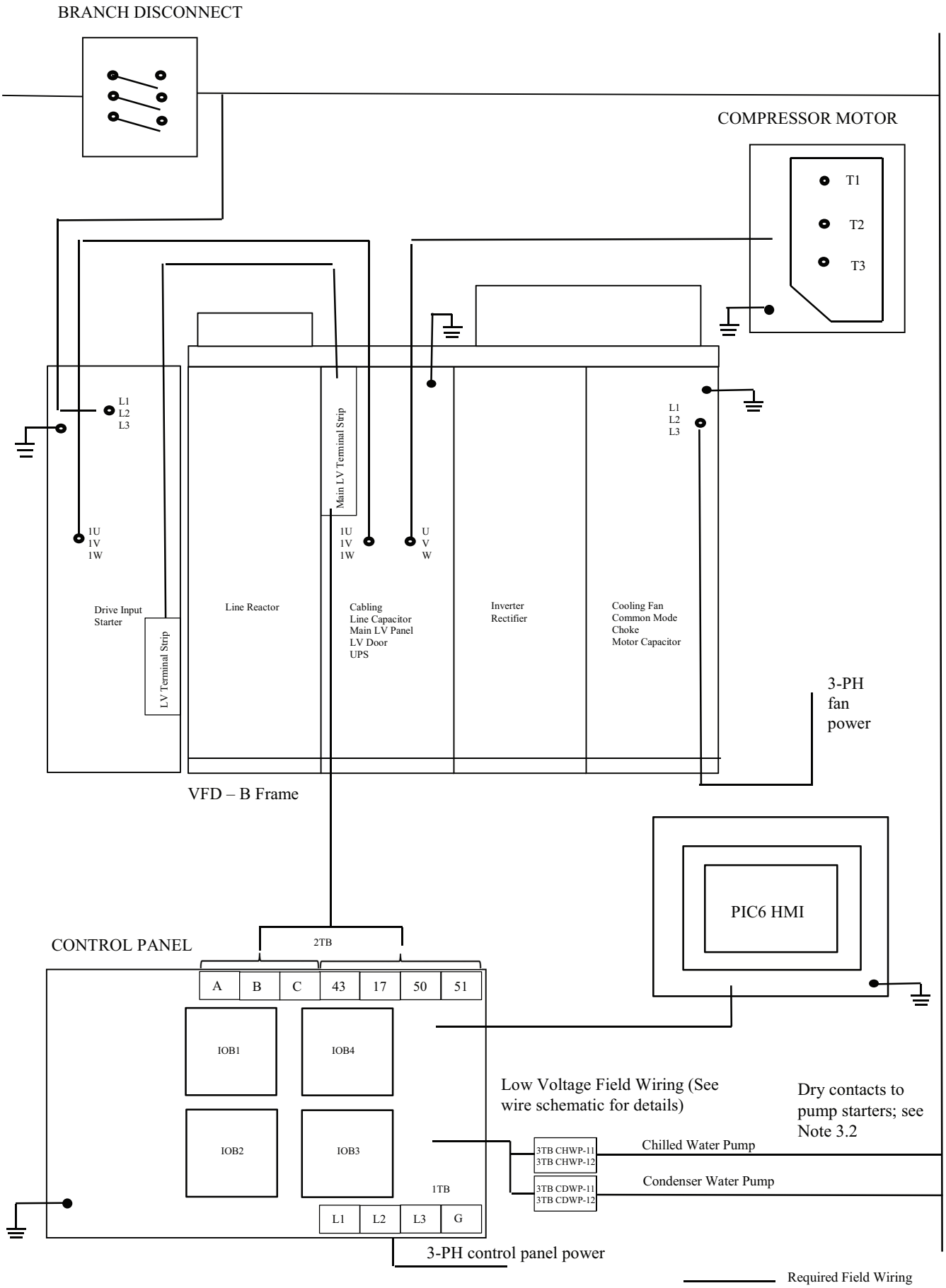

Fig. 61 — 19XR6/7 Typical Field Wiring with Free-Standing Variable Frequency Drive (VFD) (Medium Voltage)

NOTES FOR Fig. 61
19XR6/7 with Medium Voltage VFD

I. GENERAL

1.0 Variable Frequency Drive (VFD) shall be designed and manufactured in accordance with Carrier Engineering Requirement Z-416.

1.1 All field-supplied conductors, devices, and the field installation wiring, termination of conductors and devices, must be in compliance with all applicable codes and job specifications.

⚠ CAUTION

To prevent damage to machine, do NOT punch holes or drill into the top surface of the VFD enclosure for field wiring. Field wiring knockouts are provided on the top and side of the VFD enclosure for field wiring connections.

1.2 The routing of field-installed conduit and conductors and the location of field-installed devices must not interfere with equipment access or the reading, adjusting, or servicing of any component.

1.3 Equipment installation and all starting and control devices, must comply with details in equipment submittal drawings and literature.

1.4 Contacts and switches are shown in the position they would assume with the circuit de-energized and chiller shutdown.

1.5 WARNING - Do not use aluminum conductors.

1.6 Installer is responsible for any damage caused by improper wiring between VFD and machine.

1.7 All field-installed wiring is field-supplied.

II. POWER WIRING TO VFD

2.0 Provide a means of disconnecting power to VFD.

2.1 Lug adapters may be required if installation conditions dictate that conductors be sized beyond the minimum ampacity required. Contact VFD supplier for lug information.

2.2 Compressor motor and controls must be grounded by using equipment grounding lug provided inside VFD enclosure.

III. CONTROL WIRING

3.0 Field supplied control conductors to be at least 18 AWG or larger. It is recommended to connect all input/output field control wiring to Carrier Input/Output boards (IOBs) inside Carrier control panel.

3.1 Optional controls Input device contacts (devices not supplied by Carrier), must have 24 VAC rating. MAX current is 60 mA, nominal current is 10 mA. The field wiring should be designed/installed in such a manner as to prevent electrical noise from being introduced into the chiller controller. Switches with gold plated bifurcated contacts are recommended.

3.2 Each integrated contact output can control loads (VA) for evaporator pump, condenser pump, tower fan low, tower fan high, and alarm annunciator devices rated 1 amp AC RMS steady-state and 4 amps surge. Coil voltage of relay is 24 vac. Be sure to use pilot relays to avoid damage to the IOBs. Suggested rating of pilot relay is 10 amps; for example, 19XV05005503.

3.3 For water pump control, either hardwire from chiller controls or alternatively the chiller controls must be interlocked with the building automation system so chiller controls can start/stop the water flow. Pilot relays are field supplied.

⚠ CAUTION

Control wiring for Carrier to start water pumps and establish flows must be provided to assure machine protection. If primary pump, tower fan, and flow control is by other means, also provide parallel means for control by Carrier. Failure to do so could result in machine freeze-up or overpressure and loss of warranty.

Do not use control transformers in the control center as the power source for external or field-supplied contactor coils, actuator motors or any other loads.

3.4 Do not route control wiring carrying 30-v or less within a conduit which has wires carrying 50-v or higher or along side wires carrying 50-v or higher.

3.4 Control wiring between VFD and power panel must be separate shielded cables with minimum rating 600-v, 80°C. Ground shield at VFD.

3.6 If optional pumpout/oil pump circuit breaker is not supplied within the starter enclosure, it must be located within sight of machine with wiring routed to suit.

3.7 When providing conductors for oil pump motor and oil heater power, refer to sizing data on label located on the chiller power panel, equipment submittal documentation or equipment product data catalog.

3.8 Head Pressure 4-20 mA output signal is designed for controllers with a non-grounded 4-20 mA input signal and a maximum input impedance of 500 ohms.

IV. POWER WIRING BETWEEN FREE-STANDING VFD AND COMPRESSOR MOTOR

4.0 Medium voltage (over 600 volts) compressor motors have (3) terminals. Connections are 9/16-in. threaded stud. A compression lug with a single 9/16-in. diameter hole can be connected directly to the stud or 3 adapters are supplied for connecting a NEMA lug. Use suitable connectors and insulation for high voltage alternating current cable terminations (these items are not supplied by Carrier).

4.1 Power conductor rating must meet minimum unit nameplate voltage and compressor motor RLA. Refer to the label located on the side of the chiller control panel, equipment submittal documentation or equipment product data catalog for conductor sizing data. (Conductor as defined below may be a single lead or multiple smaller ampacity leads in parallel for the purpose of carrying the equivalent or higher current of a single larger lead.)

When 3 conductors are used:

Minimum ampacity per conductor = 1.25 x compressor RLA

When 6 conductors are used:

Minimum ampacity per conductor = 1.25 x compressor RLA/2

4.2 When more than one conduit is used to run conductors from VFD to compressor motor terminal box, an equal number of leads from each phase (conductor) must be in each conduit to prevent excessive heating. (For example, conductors to motor terminals 1, 2, and 3 in one conduit, and to 1, 2, and 3 in another conduit.)

4.3 Compressor motor power conductors may enter terminal box through top, left side or bottom left using holes cut by contractor to suit conduit. Flexible conduit should be used for the last few feet to the terminal box for unit vibration isolation. Use of stress cones may require an oversize (special) motor terminal box (not supplied by Carrier).

4.4 Compressor motor frame to be grounded in accordance with the National Electrical Code (NFPA-70) and applicable codes. Means for grounding compressor motor is a #4 AWG to 500 MCM pressure connector, supplied and located in the lower left side corner of the compressor motor terminal box.

4.5 Do not allow motor terminals to support weight of wire cables. Use cable supports and strain reliefs as required.

4.6 Use backup wrench when tightening lead connectors to motor terminal studs. Torque to 30-35 ft-lb max. Use the instructions provided in the Startup and Operations Manual for additional detail for wire connections to the motor terminals.

4.7 Do not exceed 100 ft. maximum power cable length between the VFD and motor terminals without consulting Carrier for special requirements.

CABLE INSULATION REQUIREMENTS

SYSTEM VOLTAGE	CABLE INSULATION RATING (kv) (MAX. PEAK LINE-TO-GROUND)	
	LINE SIDE	MACHINE SIDE
2400	> 2.20	> 2.20
3000	> 2.75	> 2.75
3300	> 3.00	> 3.00
4160	> 3.80	> 3.80
6000	> 5.50	> 5.50
6300	> 5.80	> 5.80
6600	> 6.00	> 6.00

LEGEND AND NOTES FOR Fig. 62-64

Control Abbreviations — Fig. 62-64

ALE	—	Chiller Alert
ALM	—	Chiller Alarm
AUTO_DEM	—	Demand Limit Input
AUTO_RES	—	Auto Water Temp Reset
CHST_OUT	—	Chiller Running (On/Off/Ready)
CHW_DP	—	Chilled Water Pressure Difference
CHWP	—	Chilled Water Pump
CHWP_V	—	Chilled Water Pump (Variable)
CHWR	—	Chilled Water Return
CHWS	—	Chilled Water Supply
CDWP	—	Condenser Water Pump
CDWP-V	—	Condenser Water Pump (Variable)
CHWP	—	Chilled Water Pump
CHWP_V	—	Chilled Water Pump (Variable)
COND_EWP	—	Entering Condenser Water Pressure
COND_FL	—	Condenser Water Flow Measurement
COND_FS	—	Condenser Water Flow Switch
COND_LWP	—	Leaving Condenser Water Pressure
COND_P	—	Condenser Pressure
CUS_ALE	—	Customer Alert
DGT	—	Compressor Discharge Temperature
DMP_CL	—	Economizer Damper Valve Close
DMP_FC	—	Damper Valve Feedback Fully Close
DMP_FO	—	Damper Valve Feedback Fully Open
DMP_OP	—	Economizer Damper Valve Open
ECDW	—	Entering Condenser Water Temperature
ECON_P	—	Economizer Pressure
ECW	—	Entering Chilled Water Temperature
ERT	—	Evaporator Refrigerant Temperature
EVAP_EWP	—	Entering Evaporator Water Pressure
EVAP_FL	—	Evaporator Water Flow Measurement
EVAP_LWP	—	Leaving Evaporator Water Pressure
EVAP_P	—	Evaporator Pressure
FS-SS	—	Free Cooling Start Switch
GV1-ACT	—	IGV1 Position Input
GV1_OUT	—	IGV1 Control Signal
HDPV_OUT	—	Head Pressure Output
HGBP_CL	—	Hot Gas Bypass (HGBP) Valve Close
HGBP_FC	—	Hot Gas Bypass Valve Feedback Fully Close
HGBP_FO	—	Hot Gas Bypass Valve Feedback Fully Open
HGBP_OP	—	Hot Gas Bypass Valve Open
HP_SW	—	High Pressure Switch
ICE_CON	—	Ice Build Contact
LCDW	—	Leaving Condenser Water Temperature
LCW	—	Leaving Chilled Water Temperature
MTRB1	—	Low Speed Motor End Bearing Temperature (Thermistor/PT100)
MTRB2	—	Low Speed Compressor End Bearing Temperature (Thermistor/PT100)
MTRB3	—	High Speed Motor End Bearing Temperature (Thermistor/PT100)
MTRB4	—	High Speed Compressor End Bearing Temperature (Thermistor/PT100)
MTRW1	—	Motor Winding Temperature 1
MTRW2	—	Motor Winding Temperature 2
MTRW3	—	Motor Winding Temperature 3
OIL_HEAT	—	Oil Heater On/Off
OIL_PUMP	—	Oil Pump On/Off
OILP_DIS	—	Oil Pump Discharge Pressure
OILP_SMP	—	Oil Sump Pressure
OILT_SMP	—	Oil Sump Temperature
REM_CON	—	Remote Connect Input
REM_LOCK	—	Chiller Lockout Input
REM_STP	—	Remote Stop Lock
SAFETY	—	Spare Safety
SHFT_DIS	—	Bearing Shaft Displacement Switch
TFR_HIGH	—	Tower Fan High
TFR_LOW	—	Tower Fan Low
TOW_FAN	—	Tower Fan (Variable)

Wiring Codes — Fig. 62-64

1C	—	Oil Heater Contactor
1CB	—	Micro Circuit Breaker, Control Box
1R	—	Alarm Relay
1T	—	Transformer 1
1TB	—	Terminal Block for Customer Power Connection
2C	—	Oil Pump Contactor
2CB	—	Micro Circuit Breaker, HMI
2T	—	Transformer 2
2TB	—	Terminal Block for Field Connection
3FU1,2	—	Transformer 1 Primary Fuse
3FU3,4	—	Transformer 1 Secondary Fuse
3T	—	Transformer 3
3TB	—	Terminal Block for Customer Optional Connection
4TB	—	HMI Terminal Block Field CCN Connection
5TB	—	Terminal Block for Control Panel Internal Connection
6TB	—	Terminal Block for Guide Vane, HGBP and Damper Valve
7TB	—	Terminal Block for Guide Vane Actuator (220 v)
A01	—	IGV/Stage 1 IGV
A03	—	Discharge Gas Temperature Thermistor
A04	—	High Pressure Switch
A06	—	Bearing Displacement Switch
C11	—	HGBP Valve Actuator
E01	—	Evaporator Pressure Transducer
E03	—	Leaving Chilled Water Temperature Thermistor
E05	—	Evaporator Refrigerant Liquid Temperature Thermistor
EC01	—	Economizer Pressure Transducer
EC06	—	Damper Valve Actuator
HMI	—	Human Interface Panel
ISM	—	Integrated Starter Module
M01	—	Motor Winding Temperature 1 (Thermistor/PT100)
M02	—	Motor Winding Temperature 2 (Thermistor/PT100)
M03	—	Motor Winding Temperature 3 (Thermistor/PT100)
MSP	—	Motor Starter Protection
SAIA	—	SAIA Touch Screen and Main Board
T01	—	Low Speed Motor End Bearing Temperature (Thermistor/PT100)
T02	—	Low Speed Compressor End Bearing Temperature (Thermistor/ PT100)
T03	—	High Speed Motor End Bearing Temperature (Thermistor/PT100)
T04	—	High Speed Compressor End Bearing Temperature (Thermistor/ PT100)
T05	—	Oil Sump Temperature Thermistor
T07	—	Oil Sump Pressure Transducer
T08	—	Oil Pump Discharge Pressure Transducer
T10	—	Oil Heater
T11	—	Oil Pump

NOTE: For customer-supplied 24 vac coil relays, Carrier recommends relays with contacts rated at a minimum of 10 amps sealed and 100 amps inrush.

LEGEND — Fig. 62-64

○	DENOTES COMPONENT TERMINAL
—)(—	DENOTES CONDUCTOR MALE/FEMALE CONNECTOR
— —	FIELD WIRING
———	OPTIONAL WIRING
———	COMPONENT/PANEL ENCLOSURE
□	TERMINAL BLOCK FOR FIELD WIRING
Ø	TERMINAL BLOCK FOR INTERNAL CONNECTION
•	WIRE SPLICE

LUG CAPACITY: 8AWG MAX

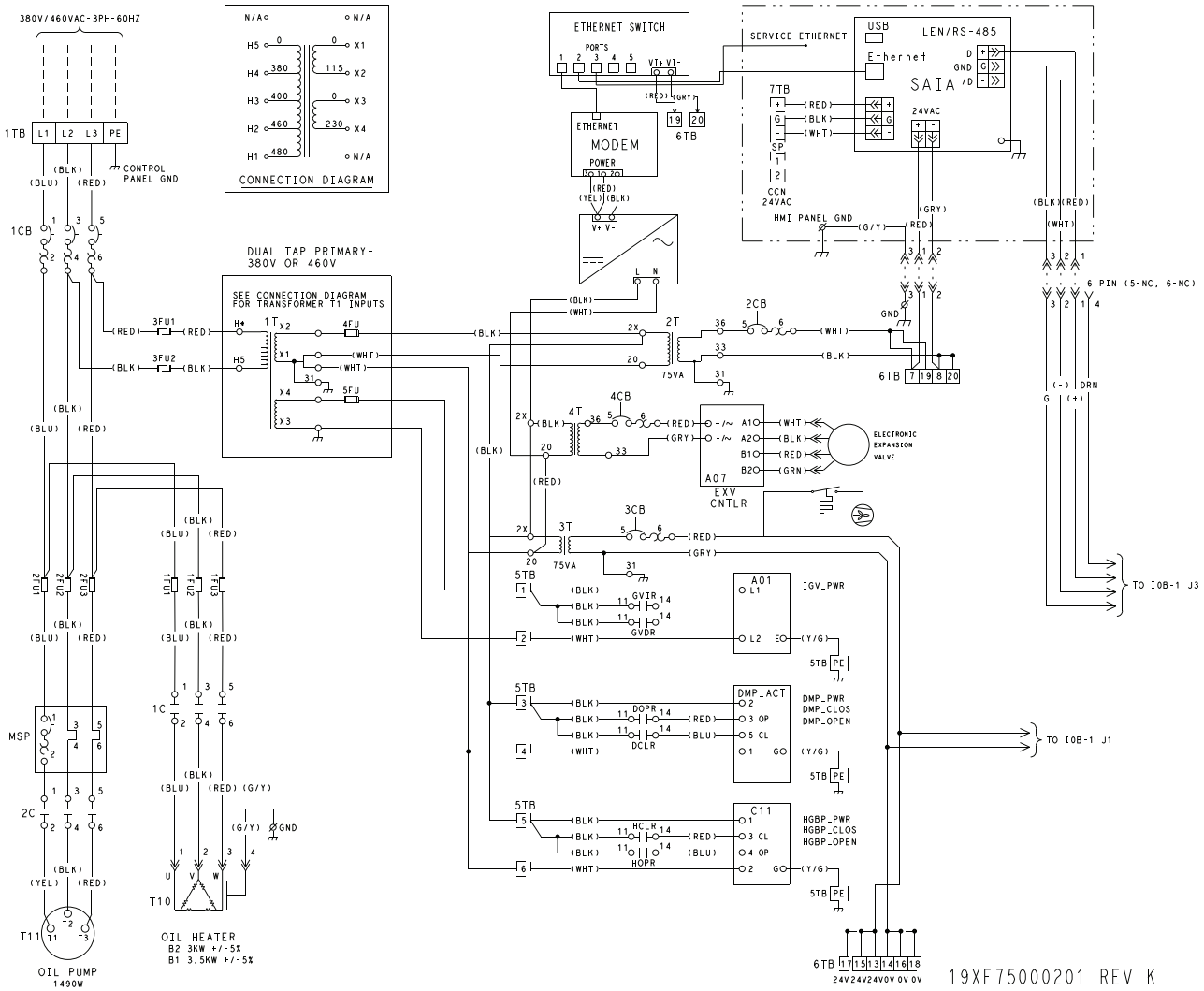

Fig. 62 — 19XR6-7 Controls Diagram

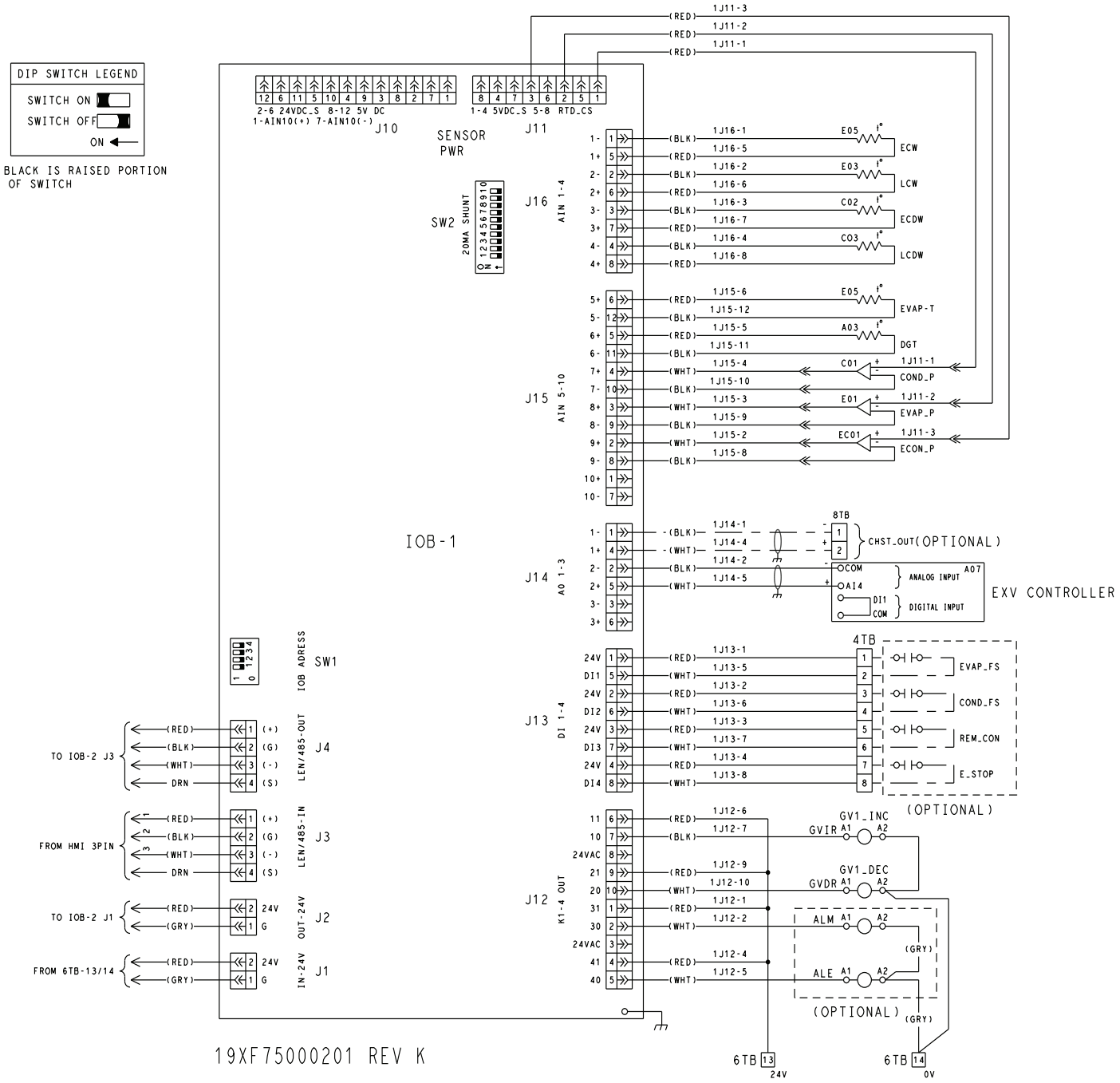

Fig. 63 — 19XR6-7 Chiller Control Schematic

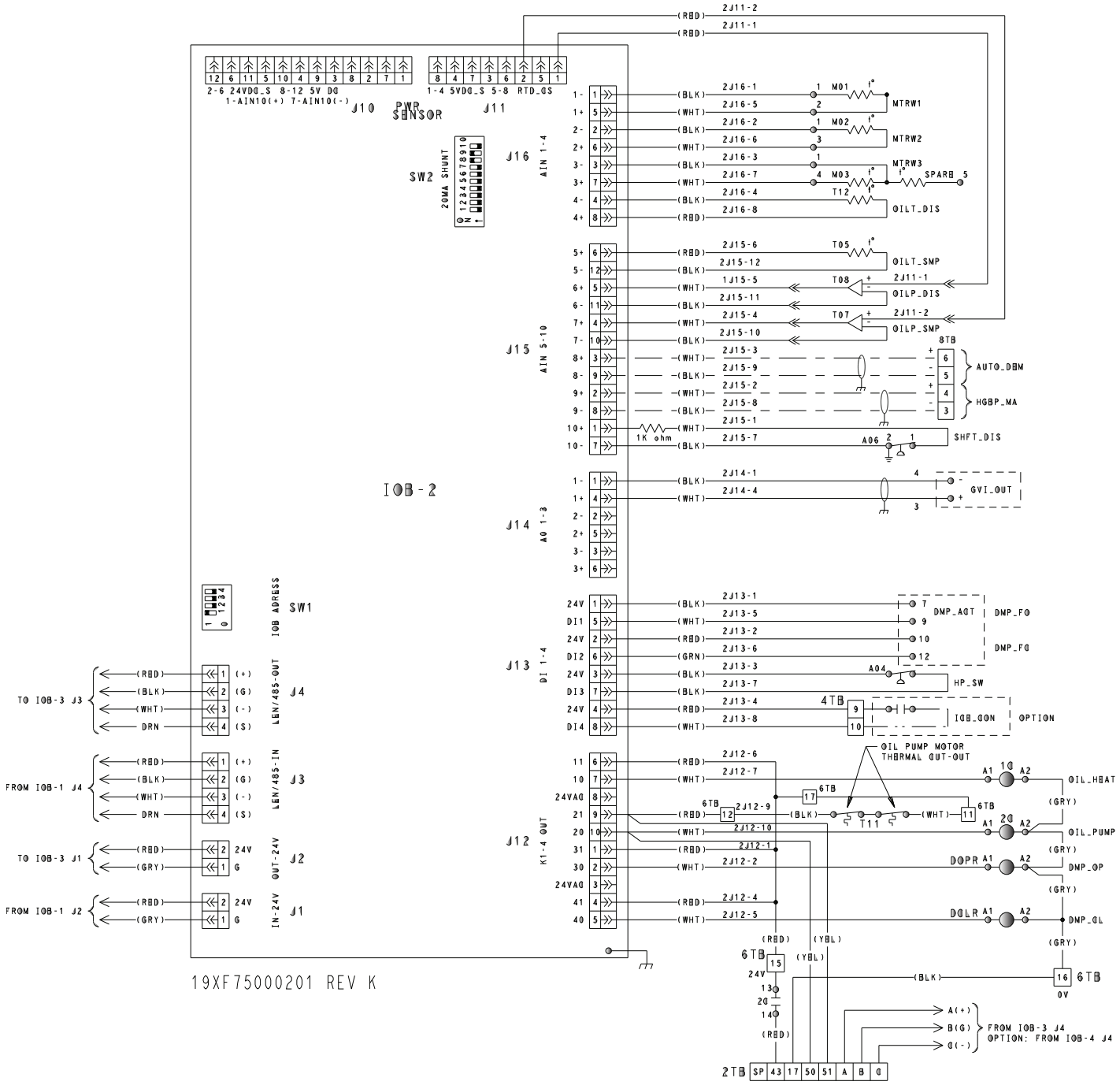

Fig. 63 — 19XR6-7 Chiller Control Schematic (cont)

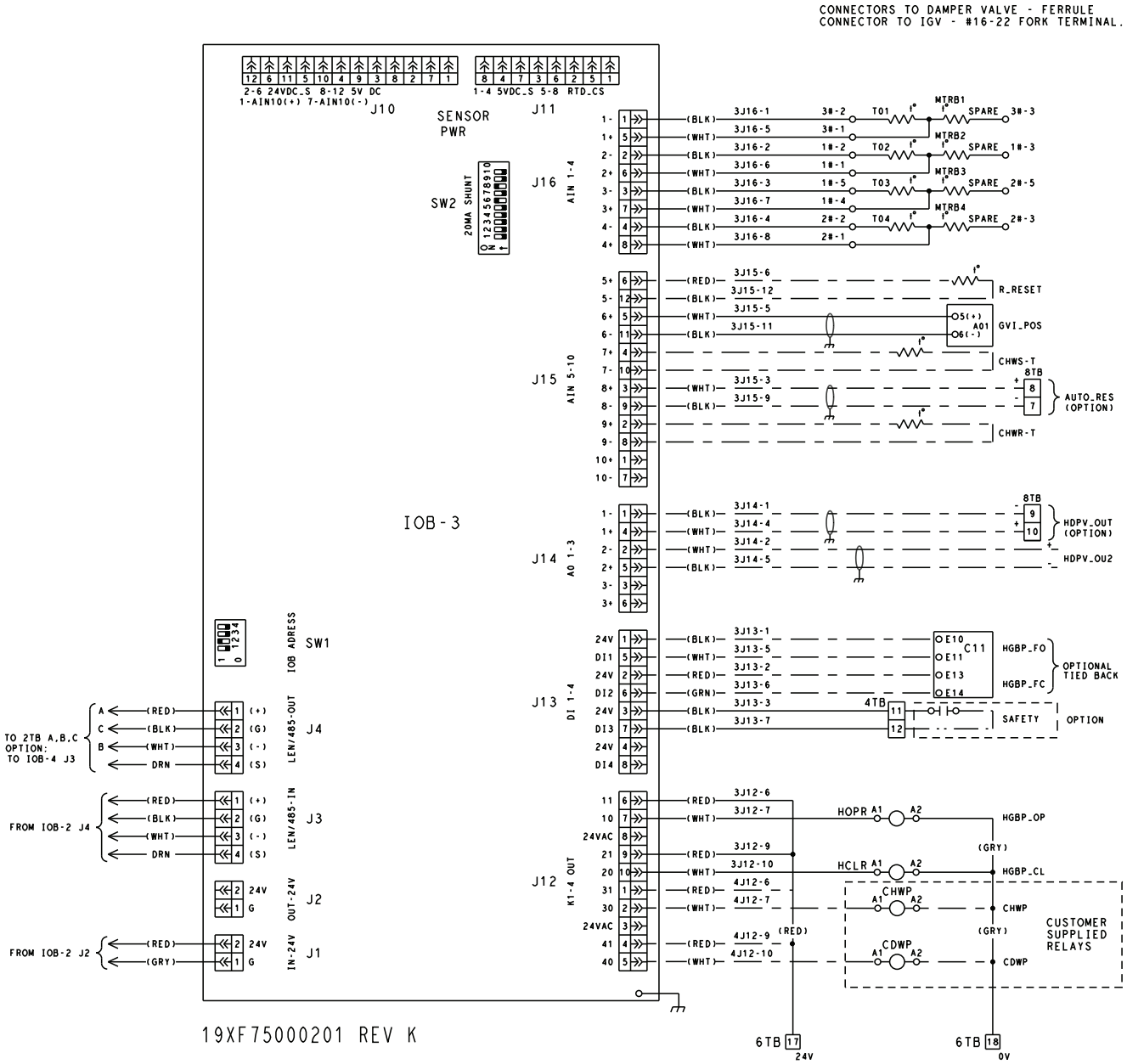

Fig. 63 — 19XR6-7 Chiller Control Schematic (cont)

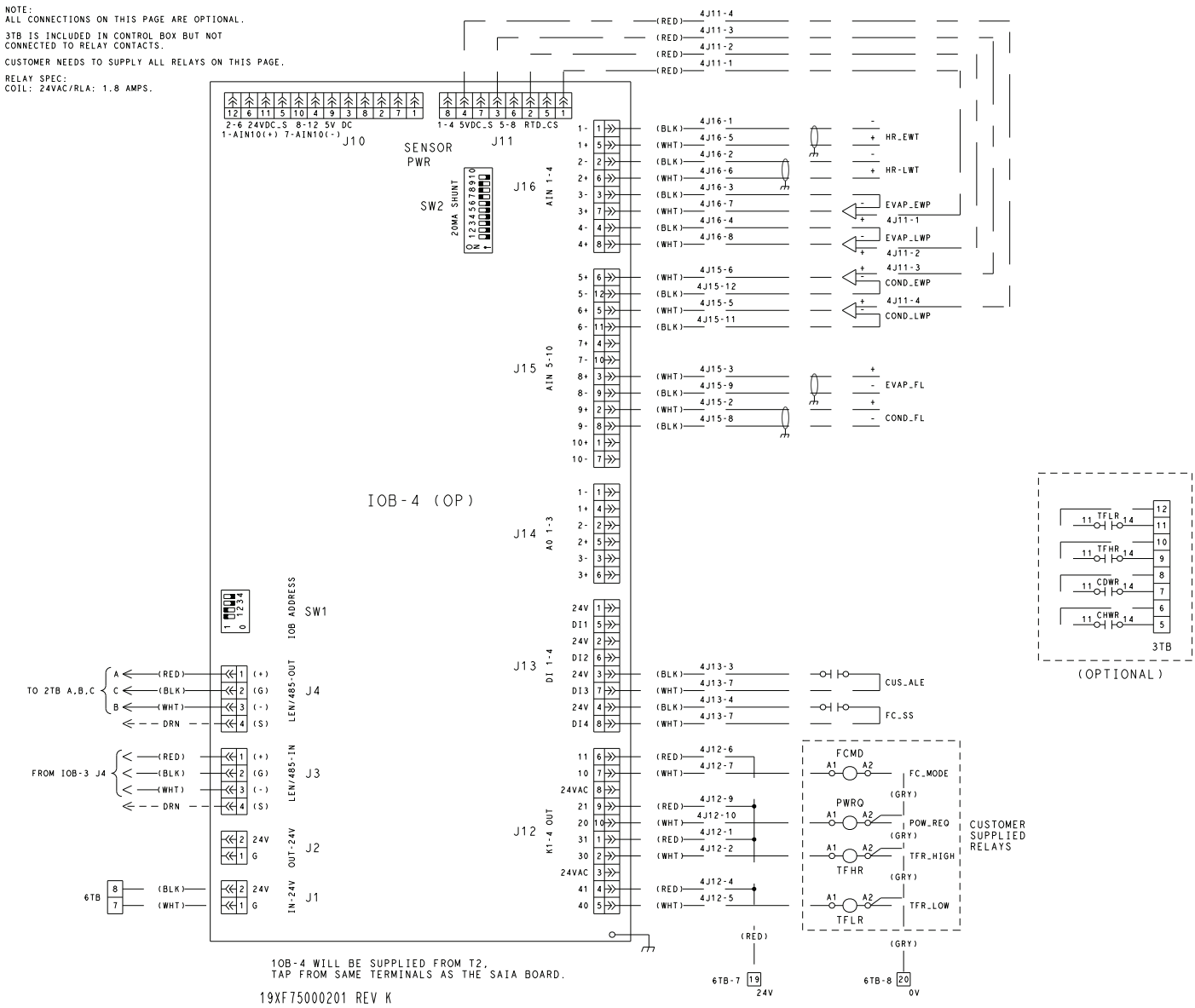

Fig. 63 — 19XR6-7 Chiller Control Schematic (cont)

FOR CUSTOMER SUPPLIED CONNECTION POINTS
USE MOLEX CONNECTOR AND FEMALE PIN SHOWN HERE.

CUSTOMER OPTIONAL PLUG CONNECTOR P/N		
ITEM	MOLEX P/N	CARRIER P/N
PIN REMOVAL TOOL	11-03-0044	--
FEMALE PIN	46018-1541	19XF05002401
J1 PLUG (2 PIN)	39-01-2025	19XF05002201
J3 PLUG (4 PIN)	39-01-2045	19XF05002202
J11 PLUG (8PIN-BLACK)	50-36-1713	19XF05002207
J12 PLUG (10 PIN)	39-01-2105	19XF05002205
J13 PLUG (8 PIN)	39-01-2085	19XF05002204
J14 PLUG (6 PIN)	39-01-2065	19XF05002203
J15 PLUG (12 PIN)	39-01-2125	19XF05002206
J16 PLUG (8 PIN)	39-01-2085	19XF05002204

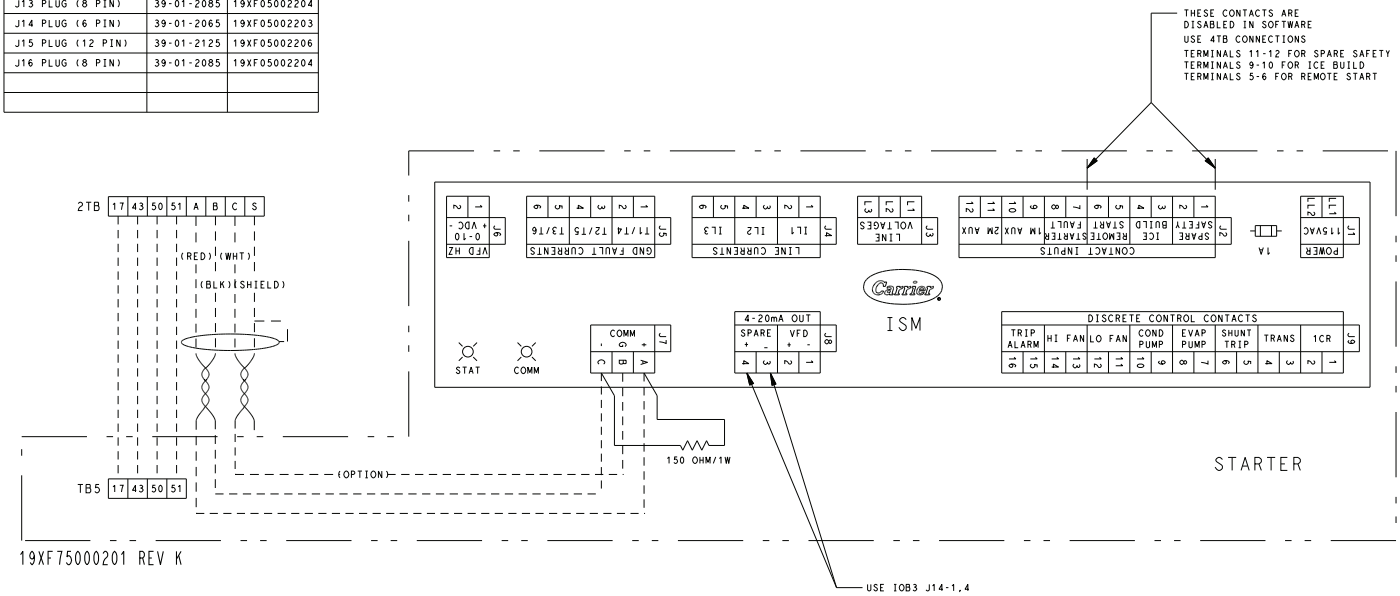

NOTE: For medium voltage free-standing VFD, TB5 is identified as drive terminal block 1 and is located at the low voltage terminal strip.

Fig. 64 — Starter Wiring

Insulate Motor Terminals and Lead Wire Ends

Insulate compressor motor terminals, lead wire ends, and electrical wires to prevent moisture condensation and electrical arcing.

Medium Voltage Units

Medium-voltage units require special terminal preparation. Follow local electrical codes for high-voltage installation. Vinyl tape is not acceptable; a high voltage terminal method must be used.

High Voltage Units (7000 Motor Volts and Higher)

These units require additional components for terminal isolation. The isolators (cap sleeve insulators) are ordered automatically for units that require the additional insulators. See Fig. 65 for an example.

NOTE: Wiring must be installed for the oil pump power supply and oil heater supply, along with interconnecting control wiring from the power panel to the starter.

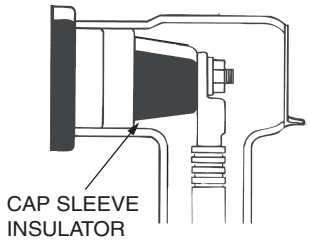

Fig. 65 — Cap Sleeve Insulation to Prevent Arcing

Connect Power Wires to Oil Pump Starter (For 19XR2-E, if required)

Connect power wires to power input terminals in the control panel. If required, use separate fused disconnect or circuit breaker as shown on job wiring diagrams. Check that power supply voltage agrees with oil pump voltage. Follow correct phasing for proper motor rotation.

⚠ CAUTION

Do not punch holes or drill into the top surface of power panel. Damage to machine could result. Use knockouts provided in the bottom of the power panels for wiring connections.

Connect Power Wires to Oil Heater Contactor (For 19XR2-E, if required)

Connect control power wiring between the oil heater contactor terminals and terminals L1 and L2 on the field wiring strip in the compressor motor starter.

For 19XR6-7 connect 3-phase power (per job requirement) to terminal block 1TB in the control panel. This power controls the heater and oil pump.

⚠ WARNING

When voltage to L1, L2, L3 in the control panel is supplied from a control transformer in a starter built to Carrier specifications, do not connect an outside source of control power to the compressor motor starter. An outside power source will produce dangerous voltage at the line side of the starter, because supplying voltage at the transformer secondary terminals produces input level voltage at the transformer primary terminals. Severe injury could result.

Connect Wiring from Starter to Power Panel

Connect control wiring from main motor starter to the machine power panel. All control wiring must use shielded cable. Also, connect the communications cable. Refer to the job wiring diagrams for cable type and cable number. Make sure the control circuit is grounded in accordance with applicable electrical codes and instructions on machine control wiring label.

CARRIER COMFORT NETWORK INTERFACE

The Carrier Comfort Network® (CCN) communication bus wiring is supplied and installed by the electrical contractor. It consists of shielded, 3-conductor cable with drain wire.

The system elements are connected to the communication bus in a daisy chain arrangement. The positive pin of each system element communication connector must be wired to the positive pins of the system element on either side of it. The negative pins must be wired to the negative pins. The signal ground pins must be wired to the signal ground pins. See Fig. 45 for location of the CCN network connections on the terminal strip labeled CCN.

NOTE: Conductors and drain wire must be 20 AWG (American Wire Gage) minimum stranded, tinned copper. Individual conductors must be insulated with PVC, PVC/nylon, vinyl, Teflon[1], or polyethylene. An aluminum/polyester 100% foil shield and an outer jacket of PVC, PVC/nylon, chrome vinyl, or Teflon with a minimum operating temperature range of –4°F to 140°F (–20°C to 60°C) is required. See table for cables that meet the requirements.

MANUFACTURER	CABLE NO.
Alpha	2413 or 5463
American	A22503
Belden	8772
Columbia	02525

When connecting the CCN communication bus to a system element, a color code system for the entire network is recommended to simplify installation and checkout. The following color code is recommended:

SIGNAL TYPE	CCN BUS CONDUCTOR INSULATION COLOR	CCN NETWORK INTERFACE (Control Panel)
+	Red	+
Ground	White	G
–	Black	–

If a cable with a different color scheme is selected, a similar color code should be adopted for the entire network.

At each system element, the shields of its communication bus cables must be tied together. If the communication bus is entirely within one building, the resulting continuous shield must be connected to ground at only one single point. See Fig. 45. If the communication bus cable exits from one building and enters another, the shields must be connected to ground at the lightning suppressor in each building where the cable enters or exits the building (one point only).

To connect the 19XR chiller to the network, proceed as follows (see Fig. 45):

1. Route wire through knockout in back of control panel.
2. Strip back leads.
3. Crimp one no. 8 size spring spade terminal on each conductor.
4. Attach red to "+" terminal and white to "G" terminal and black to "–" terminal of CCN Network interface located in the control panel.

1. Third-party trademarks and logos are the property of their respective owners.

Step 6 — Install Field Insulation

19XR

⚠ CAUTION

Protect insulation from weld heat damage and weld splatter. Cover with wet canvas cover during water piping installation.

When installing insulation at the jobsite, insulate the following components:

- compressor motor
- economizer
- cooler shell
- cooler tube sheets
- suction piping
- motor cooling drain
- oil reclaim piping
- oil cooler refrigerant side tubing
- refrigerant liquid line to cooler

NOTE: Insulation of the waterbox covers is applied only at the jobsite by the contractor. When insulating the covers, make sure there is access for removal of waterbox covers for servicing. See Fig. 66.

19XRV

⚠ CAUTION

Protect insulation from weld heat damage and weld splatter. Cover with wet canvas cover during water piping installation.

When installing insulation at the jobsite, insulate the following components:

- compressor motor
- cooler shell
- cooler tube sheets
- suction piping
- motor cooling drain
- oil reclaim piping
- oil cooler refrigerant side tubing
- refrigerant liquid line to cooler

NOTE: Insulation of the waterbox covers is applied only at the jobsite by the contractor. When insulating the covers, make sure there is access for removal of waterbox covers for servicing. See Fig. 67.

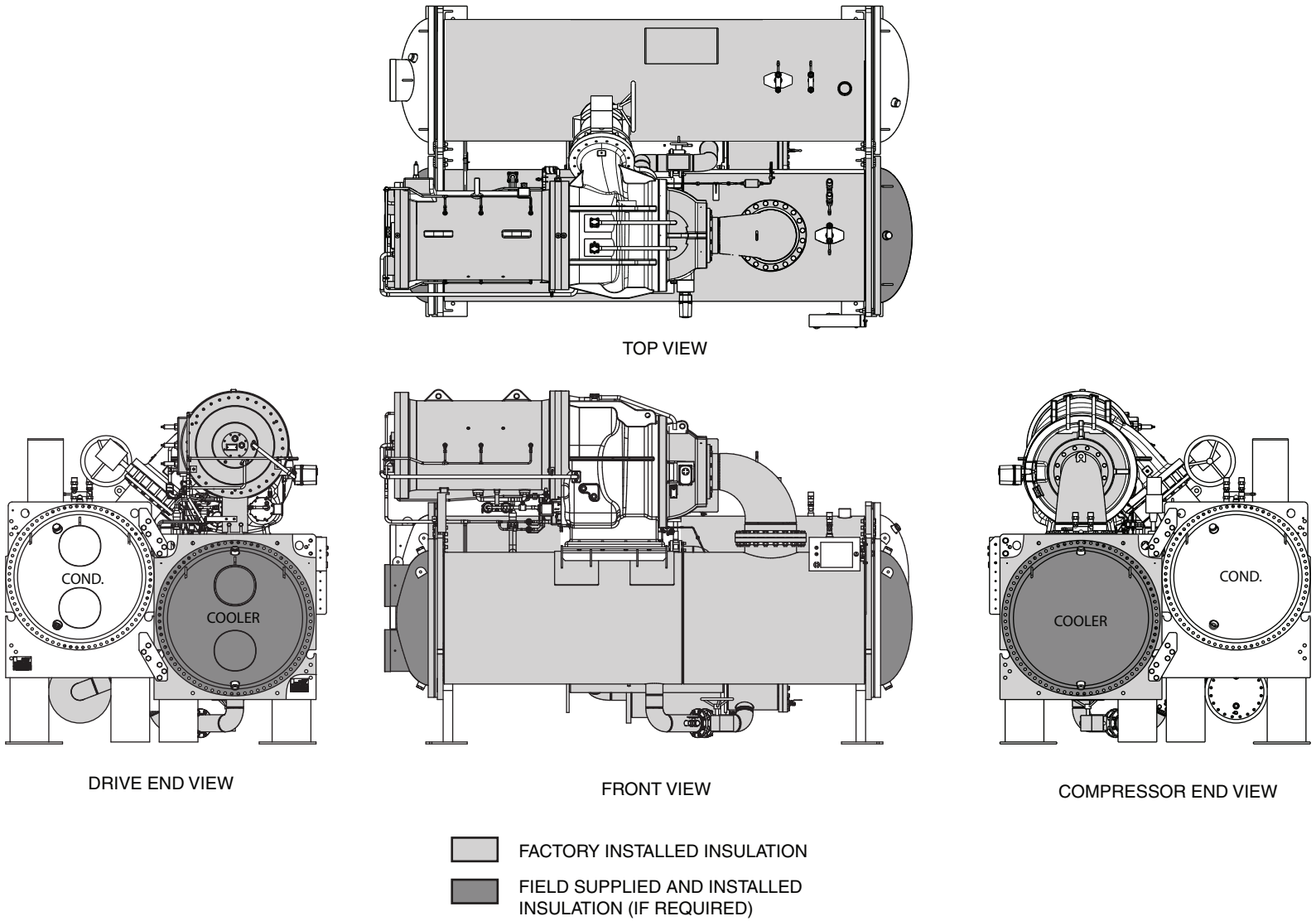

Fig. 66 — 19XR Insulation Area (Typical Unit with Economizer)

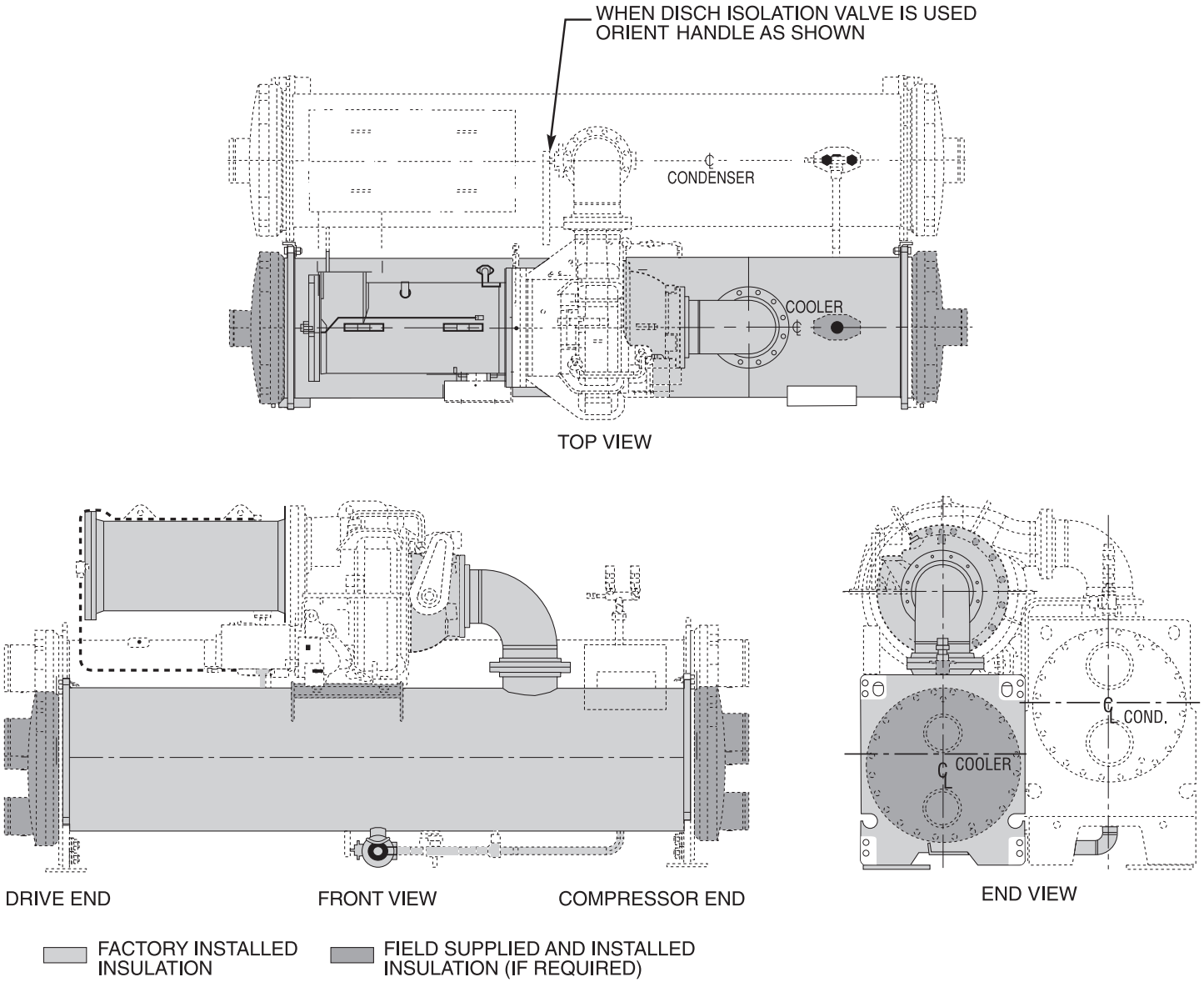

Fig. 67 — 19XR Insulation Area (Typical Unit without Economizer)

© 2023 Carrier

19XR INSTALLATION START-UP REQUEST CHECKLIST

NOTE: To avoid injury to personnel and damage to equipment or property when completing the procedures listed in this start-up checklist, use good judgment, follow safe practices and adhere to the safety considerations/information as outlined in preceding sections of this Installation Instructions document.

Machine Model Number: _____ 19XR Serial Number: _____

To: _____

Date: _____

_____

Attn: _____

_____
Project Name

_____
Carrier Job Number

NOTE: For units with medium voltage free-standing VFD, consult latest pre-commissioning Rockwell Powerflex 7000 checklist for the applicable VFD frame size. The checklist is available at http://www.literature.rockwellautomation.com.

The following information provides the status of the chiller installation.

	YES/NO (N/A)	DATE TO BE COMPLETED
1. The machine is level.	_____	_____
2. The machine components are installed and connected in accordance with the installation instructions.	_____	_____
3. The isolation package and grouting (if necessary) are installed.	_____	_____
4. The relief valves and fusible plugs are piped to the atmosphere.	_____	_____
5. All piping is installed and supported. Direction of flow is indicated in accordance with the installation instructions and job prints.		
a. Chilled water piping	_____	_____
b. Condenser water piping	_____	_____
c. Waterbox drain piping	_____	_____
d. Pumpout unit condenser piping (if installed)	_____	_____
e. Other _____	_____	_____
6. Gages are installed as called for on the job prints required to establish design flow for the cooler and condenser.		
a. Water pressure gages IN and OUT	_____	_____
b. Water temperature gages IN and OUT	_____	_____

7. The machine's starter/VFD wiring is complete. The wiring is installed per installation instructions and certified prints.

   a. Power wiring to compressor motor. (If free-standing starter/VFD or disassembly job the motor leads will not be taped until the Carrier technician Megger tests the motor.) _____ _____
   b. Consult wiring diagram. Oil pump, heater, controls, and communication is per wiring diagrams. _____ _____
   c. Carrier controls can independently energize water pumps. _____ _____
   d. Line side voltage is within ±10% of chiller nameplate voltage. _____ _____
   e. Other _____ _____ _____

8. The motor starter has not been supplied by Carrier. It has been installed according to the manufacturer's instructions. _____ _____

9. Inspect installation location. Does the starter/controls/VFD enclosure protection rating match the installation site environment? _____ _____

10. Note controls need to be powered for a substantial time prior to startup in order to obtain suitable oil temperature.

NOTE: NEMA Type 1 enclosures are constructed for indoor use to provide a degree of protection to personnel against incidental contact with the enclosed equipment and to provide a degree of protection against falling dirt. This type of enclosure does not protect against water, dust, moisture, or airborne contaminants.

COMMENTS:

TESTING	YES/NO	DATE TO BE COMPLETED
1. The cooling tower fan has been checked for blade pitch and proper operation.	_____	_____
2. The chilled water and condenser water lines have been:		
a. Filled	_____	_____
b. Tested	_____	_____
c. Flushed	_____	_____
d. Vented	_____	_____
e. Strainers cleaned	_____	_____
3. The chilled water and condenser water pumps have been checked for proper rotation and flow.	_____	_____
4. The following cooling load will be available for start-up:		
a. 25%	_____	_____
b. 50%	_____	_____
c. 75%	_____	_____
d. 100%	_____	_____
5. Unless factory charged, the refrigerant charge is at the machine.	_____	_____
6. Services such as electrical power and control air will be available at start-up.	_____	_____
7. The electrical and mechanical representatives will be available to assist in commissioning the machine.	_____	_____
8. The customers operators will be available to receive instructions for proper operation of the chiller after start-up.	_____	_____
9. Is the building automation system complete and ready for use when the chiller is started?	_____	_____

Concerns about the installation/request for additional assistance:

_____

_____

_____

_____

_____

I am aware that the start-up time for a Carrier chiller can take between 2 and 6 days depending on the model of the machine and the options and accessories used with it.

Your contact at the jobsite will be _____

Phone number _____

e-mail _____

In accordance with our contract, we hereby request the services of your technician to render start-up services per contract terms for this job on _____ (Date). I understand that the technicians time will be charged as extra services due to correcting items in this checklist that are incomplete.

Signature of Purchaser _____

Signature of Jobsite Supervisor _____

CUT ALONG DOTTED LINE

CUT ALONG DOTTED LINE

© 2023 Carrier

Manufacturer reserves the right to discontinue, or change at any time, specifications or designs without notice and without incurring obligations.