Product Data

AquaEdge® 23XRV
High-Efficiency Variable Speed Screw Chiller with Greenspeed® Intelligence
50/60 Hz
HFC-134a

175 to 550 Nominal Tons (615 to 1934 Nominal kW)

greenspeed AQUAEDGE

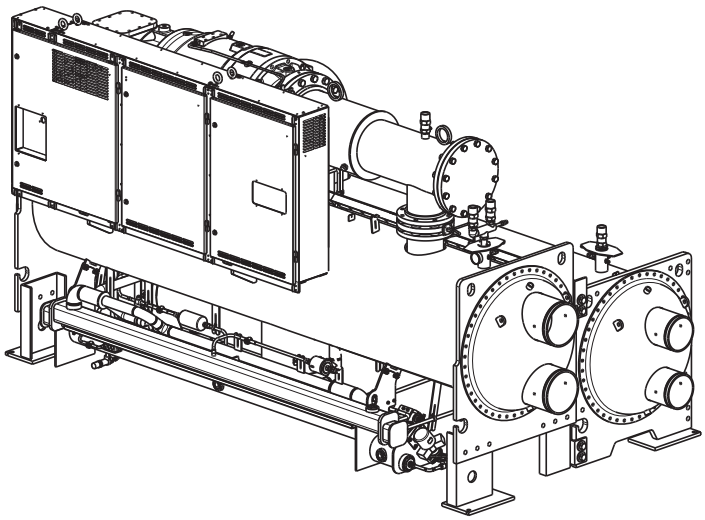

23XRV (UNIT WITH R COMPRESSOR, LF-2 VFD SHOWN)

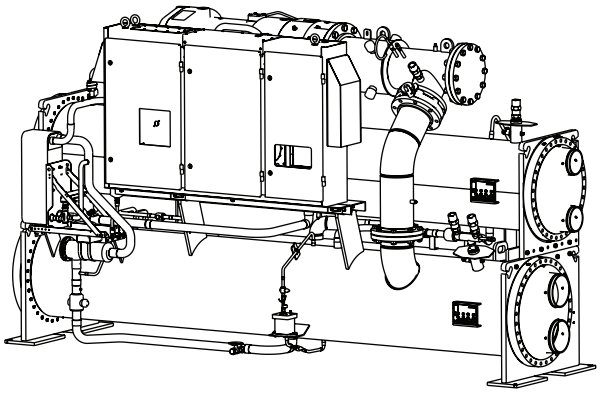

23XRV (UNIT WITH P COMPRESSOR SHOWN)

SEISMICOMPLIANT*

* Meets IBC 2006, ASCE-7-05, CBC 2007, and OSHPD seismic requirements.

ASHRAE 90.1 COMPLIANT

2008 AHR EXPO® INNOVATION AWARD WINNER – *Green Building*

Carrier's AquaEdge® 23XRV chiller with Greenspeed® intelligence is the world's first integrated variable speed, water-cooled, screw chiller.
It incorporates significant breakthroughs in water-cooled chiller technology to provide excellent reliability and achieve superior efficiencies at true operating conditions without compromising the environment.

The 23XRV chiller provides:

- Variable speed, positive displacement screw compressor.
- Air-Conditioning, Heating, and Refrigerant Institute (AHRI) certified efficiencies to 0.299 kW/ton (AHRI IPLV).
- Chlorine-free HFC-134a refrigerant.
- IEEE-519 compliance for harmonic distortion with units equipped with the optional LF-2 variable frequency drive (VFD).
- An ideal solution for constant and variable flow pumping systems.

Features/Benefits

Quality design and construction make the AquaEdge 23XRV chillers the best choice for modern, efficient chilled water plants.

Product reliability

The 23XRV chiller uses proven technology from Carrier's existing line of AquaEdge chillers along with innovations that increase reliability. The 23XRV compressors are designed for extremely high reliability. The advanced compressor features a balanced rotor geometry and shorter screw lengths, resulting in vastly reduced compressor bearing loads and a minimum L10 compressor bearing life of 50 years when operated at AHRI conditions.

© Carrier Corporation 2016

Features/Benefits (cont)

Variable speed capacity control eliminates slide valves, their associated losses, and their potential failure modes. Component count (both rotating and total) has been minimized, assuring maximum reliability under a wide range of operating conditions.

High efficiency

Per AHRI 550/590, chillers operate at design conditions less than one percent of the time. As a result, superior part load efficiency is required for today's chilled water applications. The AquaEdge® 23XRV screw chiller maximizes chiller efficiency by optimizing compressor operation. Electric power consumption drops dramatically when the motor speed slows. The 23XRV screw chiller delivers industry-leading integrated part load values (IPLV) in an extremely broad range of applications and climates. The AquaEdge chiller efficiency levels meet or exceed energy efficiency requirements of ASHRAE (American Society of Heating, Refrigerating and Air-Conditioning Engineers) 90.1-2013.

Respect for the environment

Carrier has long been committed to the environment and its sustainability. The AquaEdge 23XRV screw chillers provide our customers with a high-efficiency, chlorine-free, long-term solution unaffected by US EPA refrigerant phase outs. Carrier's decision to utilize non-ozone depleting HFC-134a refrigerant provides our customers with a safe and environmentally balanced product without compromising efficiency. In addition, HFC-134a was given an A1 safety rating by ASHRAE, meaning that it is the safest refrigerant available.

Quality design

Positive displacement compression — Positive displacement compression ensures stable operation under all load conditions without the possibility of compressor surge.

Superior oil management/cold condenser water operation — All AquaEdge 23XRV chillers regulate oil temperature, viscosity and pressure. A patented process assures high quality oil is delivered to the compressor bearings by a positive displacement pump. Bearing lubrication is assured, allowing continuous operation with cold condenser water at all loads. Screw chillers no longer need to rely on differential system pressure to effectively lubricate the compressor. Should the input power to the chiller be lost, the system design assures proper lubrication of the bearings during coast down.

Small footprint — The AquaEdge 23XRV chiller's positive pressure design reduces the chiller size by up to half compared to negative-pressure designs. Extremely high compression efficiencies allow for compact, high-efficiency chillers that require less mechanical room floor space.

Constant or variable evaporator flow — The 23XRV chiller combines the advantages of positive displacement compression with variable speed capacity control. This process provides a chiller that reacts substantially better than chillers equipped with inlet guide vanes or slide valves. This allows for easier transition when bringing additional chillers on line in multiple chiller plants and eliminates any possibility of surge, regardless of the changes in the system.

Low harmonic distortion option (with LF-2 VFD) — The AquaEdge 23XRV chiller will generate less than 5% total harmonic distortion at the input to the VFD (variable frequency drive) without the use of any external filters or line reactors. This assures the VFD alone cannot exceed IEEE-519 standard for distortion at the point of common coupling. Ultra-low harmonics can eliminate need for complicated harmonic system studies.

Low starting current (inrush) —The inrush current is limited to the chiller full load amps (rated load amperes). No other starting means can equal this level of starting current. The combination of low current and ultra-low harmonics can reduce backup generator size requirements.

0.99 power factor — The AquaEdge 23XRV chiller can operate at up to 0.99 displacement power factor (with LF-2 VFD), which helps building owners avoid power factor penalties and decreases electrical losses in cables and transformers. High power factor may also reduce KVA requirements, saving electrical system costs on new projects or freeing up electrical resources on existing systems operating near their maximum capacity.

Refrigerant-cooled VFD — The 23XRV units with Q or R compressors utilize refrigerant-cooled VFDs. Refrigerant cooling of the VFD minimizes VFD size and ensures proper cooling of the transistors for extended life. Using R-134a refrigerant instead of water also eliminates costly maintenance associated with the water cooling pump, heat exchanger and rubber tubing used with water-cooled VFDs. The 23XRV units with P compressors utilize air-cooled VFDs.

Optional seismic kit — A seismic isolation package is available to meet International Building Code and ASCE (American Society of Civil Engineers) 7 seismic qualification requirements in concurrence with ICC ES AC156 Acceptance Criteria for Seismic Qualification by Shake-Table Testing of Nonstructural Components and Systems.

Semi-hermetic motor — The AquaEdge 23XRV chiller utilizes motors that are hermetically sealed from the machine room. Cooling is accomplished by spraying liquid refrigerant on the motor windings. This highly efficient motor cooling method results in cooler-running motors than could be

Table of contents

	Page
Features/Benefits	1-4
Model Number Nomenclature	5
Physical Data	6-9
Options and Accessories	10
Dimensions	11,12
Performance Data	13,14
Electrical Data	15
Controls	16-19
Typical Piping and Wiring	20
Control Wiring Schematic	21
Application Data	22-31
Guide Specifications	32-41

realized with air-cooled designs of the same type.

In addition, Carrier's semi-hermetic design eliminates:

- Compressor shaft seals that require maintenance and increase the likelihood of refrigerant leaks.
- Machine room cooling requirements of 100 Btu/ton and 4.6 cfm/ ton associated with air-cooled motors, which dissipate heat to the mechanical room.
- High noise levels common with air-cooled motors, which radiate noise to the machine room and adjacent areas.
- Shaft alignment problems that occur with open-drive designs during start-up and operation, when equipment temperature variations cause thermal expansion.

Positive pressure design — Positive pressure designs eliminate the need for costly low pressure containment devices, reducing the initial cost of the system. The Aqua-Edge® 23XRV chiller's positive pressure design ensures that air, moisture and other performance degrading contaminants are not sucked inside the chiller. Purge units and their associated maintenance are no longer necessary.

Optional refrigerant isolation valves — The optional refrigerant isolation valves allow the refrigerant to be stored inside the chiller during shipment from the factory, minimizing start-up time. During servicing, the "in-chiller" storage reduces refrigerant loss and eliminates time-consuming transfer procedures. As a self-contained unit, the AquaEdge 23XRV chiller does not require additional remote storage systems.

Optional unit-mounted pumpdown (Q and R compressors only) — Combined with the refrigerant isolation valves listed above, the optional pumpdown unit eliminates complex connections to portable transfer systems, thereby reducing service costs. The optional unit-mounted pumpdown compressor meets Environmental Protection Agency's (EPA) vacuum level requirements that mandate minimizing refrigerant emissions during service. (A stand-alone pumpdown is available for units with P compressors.)

Modular construction — The cooler, condenser, and compressor assemblies are bolted together, making AquaEdge 23XRV chillers ideally suited for replacement jobs where ease of disassembly and reassembly at the jobsite are essential.

Single point power — The 23XRV chiller features internal control power transformers to provide low voltage power (115 v and 24 vdc) for machine controls. Simply connecting the three input power leads to the VFD provides all unit power.

Marine container shipment — The compact design allows for open-top container shipment to export destinations, ensuring quality while reducing shipping cost.

Heat exchanger combinations — The AquaEdge 23XRV chillers are available with a complete line of heat exchangers, ensuring the best combination of chiller components to meet project specific tonnage and efficiency requirements. One, 2 and 3-pass arrangements are available to meet a wide variety of flow conditions. Nozzle-in-head and marine waterboxes are available to meet 150 psig and 300 psig piping requirements.

Heat exchanger features

ASME certified construction — An independent agency certifies the design, manufacture, and testing of all heat exchangers to American Society of Mechanical Engineers (ASME) standards, ensuring heat exchanger safety, reliability and long life. The ASME U-stamp is applied to the refrigerant side of the evaporator and condenser and is applied to the water side of heat exchangers when 300 psig marine water boxes are provided.

High performance tubing — Carrier's AquaEdge chillers utilize advances in heat transfer technology, providing compact, high-efficiency heat exchangers. Tubing with advanced internally and externally enhanced geometry improves chiller performance by reducing overall resistance to heat transfer while reducing fouling.

Cooler tube expansion — Cooler tube expansion at center support sheets prevents unwanted tube movement and vibration, thereby reducing the possibility of premature tube failure. Tube wall thickness is greater at the expansion location, support sheets, and end tube sheets in order to provide maximum strength and long tube life.

Double-grooved end tube sheet holes — This design provides a more robust seal than single rolled joints, reducing the possibility of leaks between the water and refrigerant sides of the chiller.

Condenser baffle — The baffle deflects hot discharge gas before it contacts condenser tubes, reducing tube vibration and wear while distributing refrigerant more evenly over the length of the vessel for improved efficiency.

Closely spaced intermediate support sheets — Support sheets prevent tube sagging and vibration, thereby increasing heat exchanger life.

Refrigerant filter isolation valves — These valves allow filter replacement without pumping down the chiller, reducing service time and expense.

Subcooler — The subcooler, located in the bottom of the condenser, increases the refrigeration effect by cooling the condensed liquid refrigerant to a lower temperature, thereby reducing compressor power consumption. The 23XRV units with Q or R compressors utilize a FLASC (flash) style subcooler. The 23XRV units with P compressors use a sensible sub-cooler arrangement.

Flow control — The variable flow control system regulates refrigerant flow according to load conditions, providing a liquid seal at all operating conditions, eliminating unintentional hot gas bypass. The 23XRV units with Q or R compressors utilize the AccuMeter™ system, while 23XRV units with P compressors are controlled by an electronic expansion valve.

Microprocessor controls features

Direct Digital Product Integrated control (PIC III) — Carrier's PIC III provides unmatched flexibility and functionality. Each unit integrates directly with the Carrier Comfort Network® (CCN) system, providing a solution to controls applications.

International Chiller Visual Controller (ICVC) — The ICVC provides an unparalleled ease of operation and can be configured to display English or metric values.

For convenience, a single display located on the chiller VFD panel displays chiller and VFD data. The VGA 320 x 240 element LCD (liquid crystal display) features 4 menu specific softkeys. The default display offers an all-in-one glance review of key chiller operation data, simplifying the interaction between chiller and user.

The display includes 4 standard languages:

- English
- Chinese
- Japanese
- Korean

Other languages are available (P compressor available only in English).

Automatic capacity override —This function unloads the compressor whenever key safety limits are approached, increasing unit life. This feature also allows the machine to operate at reduced capacity, rather than shut down, when key safety limits are approached.

Chilled liquid reset — Reset can be accomplished manually or automatically from the building management system. For a given capacity, reset allows operation at slower compressor speeds, saving energy when warmer chilled liquid can be used.

Demand limiting — This feature limits the power draw of the chiller during peak loading conditions. When incorporated into the Carrier Comfort Network® building automation system, a red line command holds chillers at their present capacity and prevents any other chillers from starting. If a load shed signal is received, the compressors are unloaded to avoid demand charges whenever possible.

Ramp loading — Ramp loading ensures smooth pulldown of liquid loop temperature and prevents a rapid increase in compressor power consumption during the pulldown period.

Automated controls test — The test can be executed prior to start-up to verify that the entire control system is functioning properly.

365-day real time clock — This feature allows the operator to program a yearly schedule for each week, weekends, and holidays.

Occupancy schedules — Schedules can be programmed into the controller to ensure that the chiller operates when cooling is required and remains off when not needed by the tenants or process.

Extensive service menu — Unauthorized access to the service menu can be prevented through password protection. Built-in diagnostic capabilities assist in troubleshooting and recommend proper corrective action for preset alarms, resulting in greater working time.

Alarm file — This file maintains the last 25 time-and date-stamped alarm messages in memory. This function reduces troubleshooting time and cost.

Alert file — This file maintains the last 25 alert messages in memory. This function provides prognostic information and corrective actions that can avoid unit shutdown.

Configuration data backup — Non-volatile memory provides protection during power failures and eliminates time consuming control reconfiguration.

Model number nomenclature

23XRV 40 42 N R V AA 5 0 S

S – Special

Compressor Option
0 – Full Load Optimized
1 – Part Load Optimized

Voltage Code
3 – 380-3-60
4 – 416-3-60
5 – 460-3-60
7 – 575-3-60 (Q and R compressors only)
9 – 380/415-3-50

Drive Code**
AA – LF-2, 440 Amps In, 442 Amps Out
BA – LF-2, 520 Amps In, 442 Amps Out
CC – LF-2, 608 Amps In, 608 Amps Out
EC – Std Tier, 575-v, 389 Amps In, 389 Amps Out
EF – Std Tier, 575-v, 469 Amps In, 469 Amps Out
R2 – Std Tier, 230 Amps In, 230 Amps Out
R3 – Std Tier, 335 Amps In, 335 Amps Out
R4 – Std Tier, 445 Amps In, 445 Amps Out

Motor Code

H	**S**
J	**T**
P	**U**
Q	**V**
R	**X**

23XRV – High Efficiency Variable Speed Screw Chiller

Cooler Size*
A1-A6
B1-B6
30-32
35-37
40-42
45-47
50-52
55-57

Condenser Size*
A1-A6
B1-B6
30-32
35-37
40-42
45-47
50-52
55-57

Economizer Option
E – With Economizer
N – No Economizer

Compressor Code†
P
Q
R

* First character denotes frame size.
† Only H and J motors are used with P compressors. Only type V motors are used with Q compressors.
**Maximum limits only. Additional application limits apply that may reduce these ampacities.

Quality Assurance
ISO 9001:2008-certified processes

AHRI (Air Conditioning, Heating and Refrigeration Institute) Performance Certified

SEISMICOMPLIANT*

* Meets IBC 2006, ASCE-7-05, CBC 2007, and OSHPD seismic requirements.

Physical data

23XRV COMPRESSOR AND MOTOR WEIGHTS

COMPRESSOR TYPE	MOTOR SIZE	ENGLISH				SI			
		Total Compressor Weight (lb)	Stator Weight (lb)	Rotor Weight (lb)	Motor Terminal Cover (lb)	Total Compressor Weight (kg)	Stator Weight (kg)	Rotor Weight (kg)	Motor Terminal Cover (kg)
P	H,J	3036	110	167	N/A	1377	50	76	N/A
Q	V	4090	370	193	39	1855	168	88	18
R	P,Q,R,S,T,U,V,X	4866	441	229	46	2207	200	104	21

MAXIMUM COMPONENT WEIGHTS

COMPONENT		FRAME 3 HEAT EXCHANGER		FRAME 4 HEAT EXCHANGER		FRAME 5 HEAT EXCHANGER		FRAME A HEAT EXCHANGER		FRAME B HEAT EXCHANGER	
		lb	kg	lb	kg	lb	kg	lb	kg	lb	kg
Isolation Valves		70	32	70	32	115	52	70	32	70	32
Suction Elbow	P Compressor	N/A	N/A	N/A	N/A	N/A	N/A	N/A	N/A	N/A	N/A
	Q Compressor	159	72	187	85	184	83	N/A	N/A	N/A	N/A
	R Compressor	179	81	237	108	232	105	N/A	N/A	N/A	N/A
Discharge Elbow/Muffler	P Compressor	N/A	N/A	N/A	N/A	N/A	N/A	584	265	584	265
	Q Compressor	597	271	597	271	597	271	N/A	N/A	N/A	N/A
	R Compressor	747	339	747	339	747	339	N/A	N/A	N/A	N/A
Vaporizer and Oil Sump		700	318	700	318	700	318	700	318	700	318
Economizer		542	246	542	246	542	246	174	79	174	79

VFD (VARIABLE FREQUENCY DRIVE) WEIGHT TABLE

DRIVE TYPE	COMPRESSOR	VOLTAGE/Hz	AMPERAGE (A)	WEIGHT (lb)
Std. Tier	P/Q/R	480/60 & 380/400/415/50	248	998
			361 & 477	1200
	Q/R	575/60	389 & 469	1650
LF2	Q/R	380-415 50/60	440	1400
		440-480 50/60	440	1500
		380-415 & 440-480 50/60	520 & 608	1800

23XRV CODE 30-57 HEAT EXCHANGER WEIGHTS

CODE	ENGLISH						METRIC (SI)					
	Dry Rigging Weight (lb)*		Machine Charge				Dry Rigging Weight (kg)*		Machine Charge			
	Cooler Only	Cond. Only	Refrigerant Weight (lb)		Liquid Weight (lb)		Cooler Only	Cond. Only	Refrigerant Weight (kg)		Liquid Weight (kg)	
			With Economizer	Without Economizer	Cooler	Cond.			With Economizer	Without Economizer	Cooler	Cond.
30	4148	3617	800	650	464	464	1877	1676	363	295	210	210
31	4330	3818	800	650	531	542	1959	1769	363	295	241	246
32	4522	4023	800	650	601	621	2046	1860	363	295	273	282
35	4419	4529	910	760	511	513	2000	2089	413	345	232	233
36	4627	4758	910	760	587	602	2094	2195	413	345	266	274
37	4845	4992	910	760	667	692	2193	2299	413	345	303	314
40	5008	4962	900	825	863	915	2675	2746	408	375	391	415
41	5178	5155	900	825	930	995	2758	2839	408	375	422	451
42	5326	5347	900	825	990	1074	2832	2932	408	375	449	487
45	5463	5525	1015	960	938	998	2882	3001	460	436	425	453
46	5659	5747	1015	960	1014	1088	2976	3108	460	436	460	494
47	5830	5967	1015	960	1083	1179	3061	3214	460	436	491	535
50	5827	6013	1250	1100	1101	1225	3182	3304	567	499	499	556
51	6053	6206	1250	1100	1192	1304	3294	3397	567	499	541	591
52	6196	6387	1250	1100	1248	1379	3364	3485	567	499	566	626
55	6370	6708	1430	1280	1201	1339	3429	3620	649	581	545	607
56	6631	6930	1430	1280	1304	1429	3556	3726	649	581	591	648
57	6795	7138	1430	1280	1369	1514	3636	3238	649	581	621	687

LEGEND

COND — Condenser

*Rigging weights are for standard tubes of standard wall thickness (Super E3 and Spikefin 3, 0.025-in. [0.635 mm] wall).

NOTES:
1. Cooler includes the suction elbow and 1/2 the distribution piping weight.
2. Condenser includes float valve and sump, discharge elbow, and 1/2 the distribution piping weight.
3. All weights for standard 2-pass NIH (nozzle-in-head) design with Victaulic grooves.

23XRV COOLER FRAME SIZE A1-A6, B1-B6 HEAT EXCHANGER WEIGHTS

FRAME SIZE	ENGLISH			METRIC (SI)		
	Dry Rigging Wt* (lb)	Refrig. Wt (lb)	Water Wt (lb)	Dry Rigging Wt* (kg)	Refrig. Wt (kg)	Water Wt (kg)
A1	3240	270	394	1470	122	179
A2	3295	290	424	1495	132	192
A3	3395	310	477	1540	141	216
A4	3468	330	517	1573	150	235
A5	3582	360	578	1625	163	262
A6	3696	390	639	1677	177	290
B1	3481	305	450	1579	138	204
B2	3543	325	484	1607	147	220
B3	3658	355	545	1659	161	247
B4	3741	375	590	1696	170	268
B5	3871	415	660	1755	188	299
B6	4002	445	730	1815	202	331

*Rigging weights are for standard tubes of standard wall thickness (Super E3 and Spikefin 3, 0.025-in. [0.635 mm] wall).

NOTES:
1. Cooler includes the suction elbow and 1/2 the distribution piping weight.
2. Condenser includes float valve and sump, discharge elbow, and 1/2 the distribution piping weight.
3. All weights for standard 2-pass NIH (nozzle-in-head) design with Victaulic grooves.
4. For units with economizers add 20 lb (9 kg) to refrigerant weight.

23XRV CONDENSER FRAME SIZE A1-A6, B1-B6 HEAT EXCHANGER WEIGHTS

FRAME SIZE	ENGLISH			METRIC (SI)		
	Dry Rigging Wt* (lb)	Refrig. Wt (lb)	Water Wt (lb)	Dry Rigging Wt* (kg)	Refrig. Wt (kg)	Water Wt (kg)
A1	4124	550	394	1871	249	179
A2	4234	550	453	1921	249	205
A3	4334	550	507	1966	249	230
A4	4439	550	563	2014	249	255
A5	4580	550	639	2078	249	290
A6	4735	550	722	2148	249	327
B1	4410	625	450	2001	283	204
B2	4535	625	517	2057	283	235
B3	4649	625	579	2109	283	263
B4	4769	625	643	2163	283	292
B5	4931	625	730	2237	283	331
B6	5108	625	825	2317	283	374

*Rigging weights are for standard tubes of standard wall thickness (Super E3 and Spikefin 3, 0.025-in. [0.635 mm] wall).

NOTES:
1. Cooler includes the suction elbow and 1/2 the distribution piping weight.
2. Condenser includes float valve and sump, discharge elbow, and 1/2 the distribution piping weight.
3. All weights for standard 2-pass NIH (nozzle-in-head) design with Victaulic grooves.
4. For units with economizers add 20 lb (9 kg) to refrigerant weight.

Physical data (cont)

ADDITIONAL WEIGHTS FOR 23XRV MARINE WATERBOXES*

150 psig (1034 kPa) MARINE WATERBOXES

FRAME	NUMBER OF PASSES	ENGLISH (lb)				SI (kg)			
		Cooler		Condenser		Cooler		Condenser	
		Steel Wgt	Water Wgt	Steel Wgt	Water Wgt	Steel Wgt	Water Wgt	Steel Wgt	Water Wgt
A,B	1	760	532	N/A	N/A	345	241	N/A	N/A
	2	400	239	454	269	181	108	206	122
	3	752	461	N/A	N/A	341	209	N/A	N/A
3	1 and 3	730	700	N/A	N/A	331	318	N/A	N/A
	2	365	350	365	350	166	159	166	159
4	1 and 3	1888	908	N/A	N/A	856	412	N/A	N/A
	2	944	482	989	452	428	205	449	205
5	1 and 3	2445	1019	N/A	N/A	1109	462	N/A	N/A
	2	1223	510	1195	499	555	231	542	226

300 psig (2068 kPa) MARINE WATERBOXES

FRAME	NUMBER OF PASSES	ENGLISH (lb)				SI (kg)			
		Cooler		Condenser		Cooler		Condenser	
		Steel Wgt	Water Wgt	Steel Wgt	Water Wgt	Steel Wgt	Water Wgt	Steel Wgt	Water Wgt
A,B	1	812	532	N/A	N/A	368	241	N/A	N/A
	2	436	239	491	269	198	108	223	122
	3	788	461	N/A	N/A	357	209	N/A	N/A
3	1 and 3	860	700	N/A	N/A	390	318	N/A	N/A
	2	430	350	430	350	195	159	195	159
4	1 and 3	2162	908	N/A	N/A	981	412	N/A	N/A
	2	1552	393	1641	393	704	178	744	178
5	1 and 3	2655	1019	N/A	N/A	1204	462	N/A	N/A
	2	1965	439	1909	418	891	199	866	190

*Add to cooler and condenser weights for total weights. Cooler and condenser weights may be found in the 23XRV Heat Exchanger Weights tables on page 6 and 7. For heat exchanger codes 30-57, the first digit of the heat exchanger code (first column) is the heat exchanger frame size.

23XRV WATERBOX COVER WEIGHTS — ENGLISH (lb)

FRAMES 3, 4, AND 5

WATERBOX DESCRIPTION	COOLER						CONDENSER					
	Frame 3		Frame 4		Frame 5		Frame 3		Frame 4		Frame 5	
	Victaulic Nozzles	Flanged	Victaulic Nozzles	Flanged	Victaulic Nozzles	Flanged	Victaulic Nozzles	Flanged	Victaulic Nozzles	Flanged	Victaulic Nozzles	Flanged
NIH,1-Pass Cover 150 psig	282	318	148	185	168	229	282	318	148	185	168	229
NIH,2-Pass Cover 150 psig	287	340	202	256	222	275	287	340	191	245	224	298
NIH,3-Pass Cover 150 psig	294	310	472	488	617	634	294	310	503	519	628	655
NIH Plain End, 150 psig	243	243	138	138	154	154	225	225	138	138	154	154
MWB End Cover, 150 psig*	243/315	243/315	138/314	138/314	154/390	154/390	225/234	225/234	138/314	138/314	154/390	154/390
NIH,1-Pass Cover 300 psig	411	486	633	709	764	840	411	486	633	709	764	840
NIH,2-Pass Cover 300 psig	411	518	626	733	760	867	411	518	622	729	727	878
NIH,3-Pass Cover 300 psig	433	468	660	694	795	830	433	468	655	689	785	838
NIH Plain End, 300 psig	294	294	522	522	658	658	270	270	522	522	658	658
MWB End Cover, 300 psig*	445/619	445/619	522/522	522/522	658/658	658/658	359/474	359/474	658/658	658/658	658/658	658/658

LEGEND

NIH — Nozzle-in-Head
MWB — Marine Waterbox

*Nozzle end weight/return end weight.

NOTE: Weight for NIH 2-pass cover, 150 psig (1034 kPa), is included in the heat exchanger weights shown on page 6.

23XRV WATERBOX COVER WEIGHTS — ENGLISH (lb) (cont)

FRAMES A AND B

WATERBOX DESCRIPTION	COOLER FRAMES A AND B		CONDENSER FRAMES A AND B	
	Victaulic Nozzles	Flanged	Victaulic Nozzles	Flanged
NIH,1-Pass Cover 150 psig	217	244	242	274
NIH,2-Pass Cover 150 psig	172	265	191	298
NIH,3-Pass Cover 150 psig	228	245	261	277
NIH/Marine Plain End, 150 psig	157	157	173	173
MWB Cover, 150 psig*	296	296	332	332
NIH,1-Pass Cover 300 psig	217	271	242	312
NIH,2-Pass Cover 300 psig	172	301	191	334
NIH,3-Pass Cover 300 psig	228	263	261	295
NIH/Marine Plain End, 300 psig	157	157	173	173
MWB Cover, 300 psig*	296	296	332	332

LEGEND

NIH — Nozzle-in-Head
MWB — Marine Waterbox

*Nozzle end weight/return end weight.

NOTE: Weight for NIH 2-pass cover, 150 psig (1034 kPa), is included in the heat exchanger weights shown on page 7.

23XRV WATERBOX COVER WEIGHTS — SI (kg)

FRAMES 3, 4, AND 5

WATERBOX DESCRIPTION	COOLER						CONDENSER					
	Frame 3		Frame 4		Frame 5		Frame 3		Frame 4		Frame 5	
	Victaulic Nozzles	Flanged	Victaulic Nozzles	Flanged	Victaulic Nozzles	Flanged	Victaulic Nozzles	Flanged	Victaulic Nozzles	Flanged	Victaulic Nozzles	Flanged
NIH,1-Pass Cover 1034 kPa	128	144	67	84	76	104	128	144	67	84	76	104
NIH,2-Pass Cover 1034 kPa	130	154	92	116	101	125	130	154	87	111	102	135
NIH,3-Pass Cover 1034 kPa	133	141	214	221	280	288	133	141	228	235	285	297
NIH Plain End, 1034 kPa	110	110	63	63	70	70	102	102	63	63	70	70
MWB End Cover, 2068 kPa*	110/143	110/143	63/142	63/142	70/177	70/177	102/106	102/106	63/142	63/142	70/177	70/177
NIH,1-Pass Cover 2068 kPa	186	220	287	322	347	381	186	220	287	322	347	381
NIH,2-Pass Cover 2068 kPa	186	235	284	332	344	393	186	235	282	331	330	398
NIH,3-Pass Cover 2068 kPa	196	212	299	315	361	376	196	212	297	313	356	380
NIH Plain End, 2068 kPa	132	132	237	237	298	298	122	122	237	237	298	298
MWB End Cover, 2068 kPa*	202/281	202/281	237/237	237/237	298/298	298/298	163/215	163/215	298/298	298/298	298/298	298/298

LEGEND

NIH — Nozzle-in-Head
MWB — Marine Waterbox

*Nozzle end weight/return end weight.

NOTE: Weight for NIH 2-pass cover, 150 psig (1034 kPa), is included in the heat exchanger weights shown on page 6.

FRAMES A AND B

WATERBOX DESCRIPTION	COOLER FRAMES A AND B		CONDENSER FRAMES A AND B	
	Victaulic Nozzles	Flanged	Victaulic Nozzles	Flanged
NIH,1-Pass Cover 1034 kPa	98	111	110	124
NIH,2-Pass Cover 1034 kPa	78	120	87	135
NIH,3-Pass Cover 1034 kPa	103	111	118	126
NIH/Marine Plain End, 1034 kPa	71	71	78	78
MWB Cover, 1034 kPa*	134	134	151	151
NIH,1-Pass Cover 2068 kPa	98	123	110	142
NIH,2-Pass Cover 2068 kPa	78	137	87	151
NIH,3-Pass Cover 2068 kPa	103	119	118	134
NIH/Marine Plain End, 2068 kPa	71	71	78	78
MWB Cover, 2068 kPa*	134	134	151	151

LEGEND

NIH — Nozzle-in-Head
MWB — Marine Waterbox

*Nozzle end weight/return end weight.

NOTE: Weight for NIH 2-pass cover, 150 psig (1034 kPa), is included in the heat exchanger weights shown on page 7.

Options and accessories

ITEM	OPTION*	ACCESSORY†
LF2 Tier VFD (Q and R compressor only)	X	
Freestanding 5% Line Reactor (for use with Std Tier VFD only)		X
Freestanding Harmonic Filter (P compressor only)		X
.028 or .035 in. (0.711 or 0.889 mm) Internally/Externally Enhanced Copper Tubing — Cooler/Condenser	X	
.028 or .035 in. (0.711 or 0.889 mm) Internally/Externally Enhanced Cupronickel Tubing — Condenser	X	
.028 or .035 in. (0.711 or 0.889 mm) Smooth Bore/Externally Enhanced Copper Tubing — Cooler/Condenser	X	
.028 or .035 in. (0.711 or 0.889 mm) Smooth Bore/Externally Enhanced Cupronickel Tubing — Condenser	X	
Flanged Cooler and/or Condenser Waterbox Nozzles**	X	
Hinged Waterboxes	X	
Marine Waterboxes, 150 psig (1034 kPa)††	X	
Marine Waterboxes, 300 psig (2068 kPa)††	X	
Nozzle-in Head Waterbox, 300 psig (2068 kPa)	X	
One, 2, or 3 Pass Cooler or Condenser Waterside Construction	X	
Seismic Kit	X	
Zinc Anodes	X	
100K AIC (Amp Interrupt Capacity) High Interrupt Circuit Breaker (Not Available on 575-v Std Tier Drive)	X	
Analog Voltmeter and Ammeter with 3 Phase Selector Switch (LF-2 and 575-v Std Tier VFD Only)	X	
Digital Meter Kit (Std Tier Only)	X	
BACnet*** Communication	X	
LonWorks††† Carrier Translator		X
Sensor Package		X
Refrigerant Isolation Valves	X	
Separate Storage Tank and Pumpout Unit		X
Shipped Factory Charged with Refrigerant	X	
Stand-Alone Pumpout Unit		X
Unit-Mounted Pumpout Unit (Q and R compressor only)	X	
Hot Gas Bypass	X	
Soleplate Package		X
Spring Isolator Kit		X
Customer Factory Performance Testing	X	
Export Crating	X	
Extended Warranty (North American Operations [NAO] only)	X	
Service Contract	X	

*Factory-installed.
†Field-installed.
**Standard waterbox nozzles are Victaulic type. Flanged nozzles are available as an option with either nozzle-in-head type waterboxes or marine waterboxes.

††Optional marine waterboxes available for 23XRV heat exchangers. Standard waterboxes for 23XRV are nozzle-in-head type, 150 psig (1034 kPa).
***BACnet is a registered trademark of ASHRAE (American Society of Heating, Refrigerating, and Air-Conditioning Engineers).
†††LonWorks is a registered trademark of Echelon Corporation.

Dimensions

23XRV HEAT EXCHANGER SIZES 30-57 DIMENSIONS
(UNIT WITH R COMPRESSOR SHOWN)

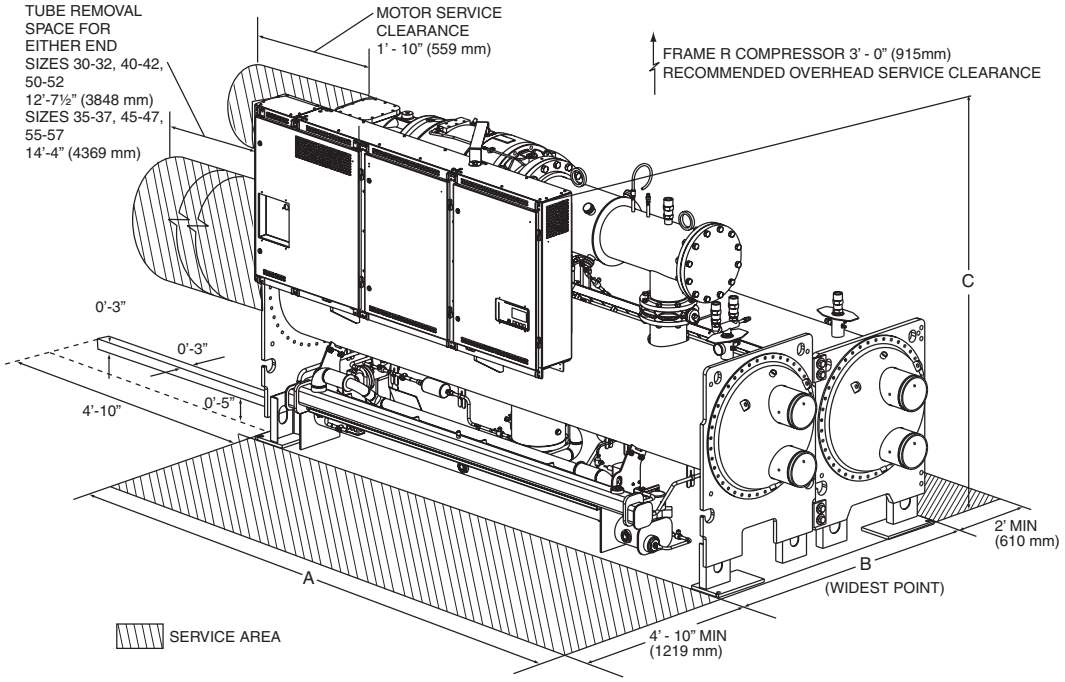

23XRV HEAT EXCHANGER SIZES 30-57 DIMENSIONS (NOZZLE-IN-HEAD WATERBOX)

HEAT EXCHANGER SIZE	A (Length, with Nozzle-in-Head Waterbox)						B (Width)	C (Height)
	1-Pass		2-Pass*		3-Pass			
	ft-in.	mm	ft-in.	mm	ft-in.	mm		
30 to 32	14- 3¼	4350	13- 8¼	4172	14- 3¼	4350	See unit certified drawings	
35 to 37	15-11¾	4870	15- 4¾	4693	15-11¾	4870		
40 to 42	14- 9	4496	14- 3⅛	4347	14- 6	4420		
45 to 47	16- 5½	5017	15-11⅝	4867	16- 2½	4940		
50 to 52	14-10	4521	14- 4½	4382	14- 6½	4432		
55 to 57	16- 6½	5042	16- 1	4902	16- 3	4953		

23XRV HEAT EXCHANGER SIZES 30-57 DIMENSIONS (MARINE WATERBOX)

HEAT EXCHANGER SIZE	A (Length, Marine Waterbox)				B (Width)	C (Height)
	2-Pass*		1 or 3-Pass†			
	ft-in.	mm	ft-in.	mm		
30 to 32	14- 9	4496	16- 4¾	4997	See unit certified drawings	
35 to 37	16- 5½	5017	18- 1¼	5518		
40 to 42	15- 2¾	4642	16- 3¼	5086		
45 to 47	16-11¾	5163	18- 4¾	5607		
50 to 52	15- 3½	4661	16- 8½	5093		
55 to 57	17- 0	5182	18- 5	5613		

*Assumes both cooler and condenser nozzles on same end of chiller.
†1 or 3-pass length applies if cooler is a 1 or 3 pass design.

NOTES:
1. Service access should be provided per American Society of Heating, Refrigerating, and Air-Conditioning Engineers (ASHRAE) 15, latest edition, National Fire Protection Association (NFPA) 70, and local safety code.
2. Allow at least 3 ft (915 mm) overhead clearance for service rigging for the compressor.
3. Certified drawings available upon request.
4. Marine waterboxes may add 6 in. (152 mm), to the width of the machine. See certified drawings for details.
5. 'A' length and 'B' width dimensions shown are for standard 150 psig (1034 kPa) design and Victaulic connections. The 300 psig (2068 kPa) design and/or flanges will add length. See certified drawings.
6. Dished head waterbox covers not available for the 3-pass design.

Dimensions (cont)

23XRV HEAT EXCHANGER FRAME SIZES A,B DIMENSIONS
(UNIT WITH P COMPRESSOR SHOWN)

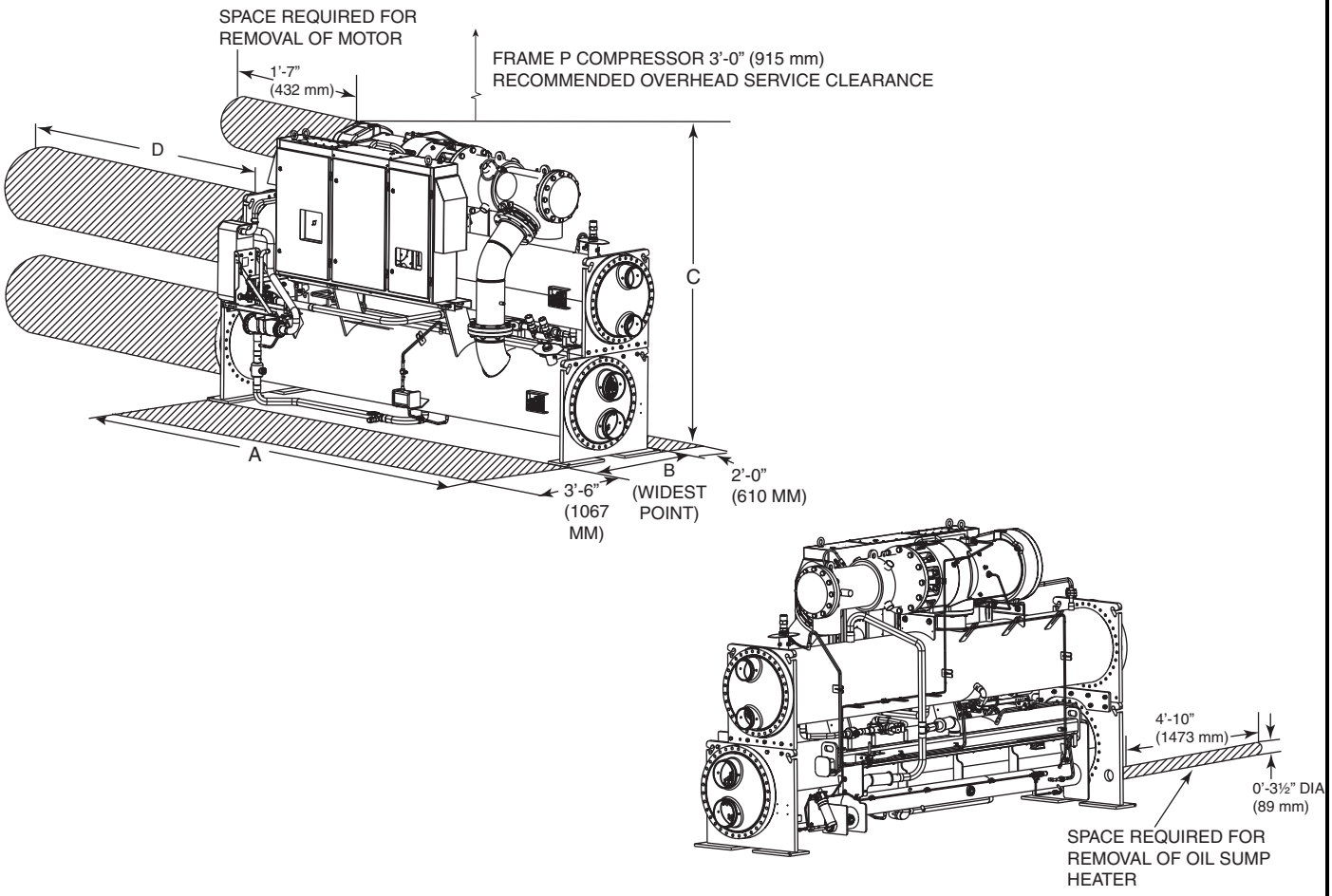

23XRV HEAT EXCHANGER FRAME SIZES A,B DIMENSIONS (NOZZLE-IN-HEAD AND MARINE WATERBOXES)

HEAT EXCHANGER SIZE	A (Length)		B (Max. Width)		C (Height)		D Tube Removal Space	
	ft-in.	mm	ft-in.	mm	ft-in.	mm	ft-in.	mm
A	13- 1/2	3988	3- 10 3/8	1178	7- 5	2261	12- 8 1/4	3867
B	14- 9	4496	3- 10 3/8	1178	7- 5	2261	14- 4 3/4	4388

NOTES:
1. Service access should be provided per American Society of Heating, Refrigerating, and Air-Conditioning Engineers (ASHRAE) 15, latest edition, National Fire Protection Association (NFPA) 70, and local safety code.
2. Allow at least 3 ft (915 mm) overhead clearance for service rigging for the compressor.
3. Certified drawings available upon request.

NOZZLE SIZE

FRAME SIZE	NOZZLE SIZE (in.) (Nominal Pipe Size)					
	Cooler			Condenser		
	1-Pass	2-Pass	3-Pass	1-Pass	2-Pass	3-Pass
3	10	8	6	10	8	6
4	10	8	6	10	8	6
5	10	8	6	10	10	8
A1-A3, B1-B3 NIH	8	6	6	8	6	6
A4-A6, B4-B6 NIH	8	6	6	10	8	6
A,B Marine	8	6	6	N/A	6	N/A

NIH — Nozzle-in-Head

23XRV HEAT EXCHANGER FRAME SIZES 3-5 MIN/MAX FLOW RATES*

ENGLISH (GPM)

COOLER		1-PASS		2-PASS		3-PASS	
Frame	Size	Min	Max	Min	Max	Min	Max
3	30	611	2444	305	1222	204	815
	31	733	2933	367	1466	244	978
	32	855	3422	428	1710	285	1141
	35	611	2444	305	1222	204	815
	36	733	2933	367	1466	244	978
	37	855	3422	428	1710	285	1141
4	40	989	3959	495	1979	330	1320
	41	1112	4448	556	2224	371	1482
	42	1222	4888	611	2444	407	1775
	45	989	3959	495	1979	330	1320
	46	1112	4448	556	2224	371	1482
	47	1222	4888	611	2444	407	1775
5	50	1316	5267	658	2634	439	1756
	51	1482	5927	741	2964	494	1976
	52	1586	6343	793	3171	529	2114
	55	1316	5267	658	2634	439	1756
	56	1482	5927	741	2964	494	1976
	57	1586	6343	793	3171	529	2114

CONDENSER		1-PASS		2-PASS		3-PASS	
Frame	Size	Min	Max	Min	Max	Min	Max
3	30	646	2582	323	1291	215	861
	31	791	3162	395	1581	263	1054
	32	932	3731	466	1865	311	1244
	35	646	2582	323	1291	215	861
	36	791	3162	395	1581	263	1051
	37	932	3731	466	1865	311	1244
4	40	1096	4383	548	2192	365	1461
	41	1235	4940	618	2470	412	1647
	42	1371	5485	686	2743	457	1828
	45	1096	4383	548	2192	365	1461
	46	1235	4940	618	2470	412	1647
	47	1371	5485	686	2743	457	1828
5	50	1507	6029	754	3015	502	2010
	51	1646	6586	823	3293	549	2195
	52	1783	7131	891	3565	594	2377
	55	1507	6029	754	3015	502	2010
	56	1646	6586	823	3293	549	2195
	57	1783	7131	891	3565	594	2377

*Flow rates based on standard tubes in the cooler and condenser. Minimum flow based on tube velocity of 3 ft/sec (0.91 m/sec); maximum flow based on tube velocity of 12 ft/sec (3.66 m/sec). Consult the factory if variable primary flow.

SI (L/s)

COOLER		1-PASS		2-PASS		3-PASS	
Frame	Size	Min	Max	Min	Max	Min	Max
3	30	38	154	19	77	13	51
	31	46	185	23	92	15	62
	32	54	215	27	108	18	72
	35	38	154	19	77	13	51
	36	46	185	23	92	15	62
	37	54	215	27	108	18	72
4	40	62	249	31	125	21	83
	41	70	281	35	140	23	93
	42	77	307	38	154	26	112
	45	62	249	31	125	21	93
	46	70	281	35	140	23	93
	47	77	307	38	154	26	112
5	50	83	332	42	166	28	111
	51	93	374	47	187	31	125
	52	100	400	50	200	33	133
	55	83	332	42	166	28	111
	56	93	374	47	187	31	125
	57	100	400	50	200	33	133

CONDENSER		1-PASS		2-PASS		3-PASS	
Frame	Size	Min	Max	Min	Max	Min	Max
3	30	41	163	20	81	14	54
	31	50	199	25	100	17	67
	32	59	235	29	118	20	79
	35	41	163	20	81	14	54
	36	50	199	25	100	17	67
	37	59	235	29	118	20	79
4	40	69	277	35	138	23	92
	41	78	312	39	156	26	104
	42	86	346	43	173	29	115
	45	69	277	35	138	23	92
	46	78	312	39	156	26	104
	47	86	346	43	173	29	115
5	50	95	380	48	190	32	127
	51	104	416	52	208	35	138
	52	112	450	56	225	37	150
	55	95	380	48	190	32	127
	56	104	416	52	208	35	138
	57	112	450	56	225	37	150

*Flow rates based on standard tubes in the cooler and condenser. Minimum flow based on tube velocity of 3 ft/sec (0.91 m/sec); maximum flow based on tube velocity of 12 ft/sec (3.66 m/sec). Consult the factory if variable primary flow.

Performance data (cont)

23XRV HEAT EXCHANGER FRAME SIZES A,B MIN/MAX FLOW RATES*

ENGLISH (GPM)

COOLER	1-PASS		2-PASS		3-PASS	
Frame	Min	Max	Min	Max	Min	Max
A1/B1	492	1968	246	984	164	656
A2/B2	529	2114	264	1057	176	705
A3/B3	596	2383	298	1192	199	794
A4/B4	645	2579	322	1289	215	860
A5/B5	721	2884	361	1442	240	961
A6/B6	797	3190	399	1595	266	1063

CONDENSER	1-PASS		2-PASS		3-PASS	
Frame	Min	Max	Min	Max	Min	Max
A1/B1	587	2346	293	1173	196	782
A2/B2	672	2689	336	1344	224	896
A3/B3	739	2957	370	1479	246	986
A4/B4	810	3239	405	1619	270	1080
A5/B5	904	3617	452	1809	301	1206
A6/B6	1008	4033	504	2016	336	1344

*Flow rates based on standard tubes in the cooler and condenser. Minimum flow based on tube velocity of 3 ft/sec (0.91 m/sec); maximum flow based on tube velocity of 12 ft/sec (3.66 m/sec). Consult the factory if variable primary flow.

SI (L/s)

COOLER	1-PASS		2-PASS		3-PASS	
Frame	Min	Max	Min	Max	Min	Max
A1/B1	31	124	16	62	10	41
A2/B2	33	133	17	67	11	44
A3/B3	38	150	19	75	13	50
A4/B4	41	163	20	81	14	54
A5/B5	45	182	23	91	15	61
A6/B6	50	201	25	101	17	67

CONDENSER	1-PASS		2-PASS		3-PASS	
Frame	Min	Max	Min	Max	Min	Max
A1/B1	37	148	18	74	12	49
A2/B2	42	170	21	85	14	57
A3/B3	47	187	23	93	15	62
A4/B4	51	204	26	102	17	68
A5/B5	57	228	29	114	19	76
A6/B6	64	254	32	127	21	85

*Flow rates based on standard tubes in the cooler and condenser. Minimum flow based on tube velocity of 3 ft/sec (0.91 m/sec); maximum flow based on tube velocity of 12 ft/sec (3.66 m/sec). Consult the factory if variable primary flow.

Electrical data

VFD FRAME SIZES

DRIVE CODE	MAX INPUT CURRENT*	MAX OUTPUT CURRENT*
AA (LF-2)	440	442
BA (LF-2)	520	442
CC (LF-2)	608	608
EC (575-v Std Tier)	389	389
EF (575-v Std Tier)	469	469
R2 (Std Tier)	230	230
R3 (Std Tier)	335	335
R4 (Std Tier)	445	445

*Maximum limits only. Additional application limits apply that will reduce these ampacities.

AUXILIARY RATINGS*

ITEM	VOLTAGE	FLA	WATTS
Oil Pump	115	1.13	130
Oil Sump Heater	115	4.35	500
Oil Sump Heater (P Compressor, 2nd Stage)	115	8.70	1000
Oil Vaporizer Heater	115	13.00	1500

LEGEND

FLA — Full Load Amps

*Factory wired to VFD.

Controls

Microprocessor controls

Microprocessor controls provide the safety, interlock, capacity control, indications and accessibility necessary to operate the chiller in a safe and efficient manner.

Control system

The microprocessor control on each Carrier chiller is factory-mounted, factory-wired, and factory-tested to ensure machine protection and efficient capacity control. In addition, the program logic ensures proper starting, stopping, and recycling of the chiller and provides a communication link to the Carrier Comfort Network® (CCN) system.

Features

Control system

- Component test and diagnostic check
- Programmable recycle allows chiller to recycle at optimum loads for decreased operating costs
- Menu-driven keypad interface for status display, set point control, and system configuration
- CCN system compatible
- Primary and secondary status messages
- Individual start/stop schedules for local and CCN operation modes
- Recall of up to 25 alarm messages and 25 alert messages with diagnostic help
- Two chiller lead/lag with third chiller standby is standard in the PIC III software
- Optional soft stop unloading decreases compressor speed to unload the motor to the configured amperage level prior to stopping
- Languages pre-programmed at factory for English, Chinese, Japanese, Korean (P compressor available only in English)
- ILT (International Language Translator) available for conversion of extended ASCII characters

Safety cutouts

- Motor high temperature*†
- Refrigerant (condenser) high pressure*†
- Refrigerant (cooler) low temperature*†
- Lube oil low pressure*
- Compressor (refrigerant) high discharge temperature*
- Under voltage**
- Over voltage**
- Cooler and condenser liquid flow
- Motor overload†
- Motor acceleration time
- Intermittent power loss**
- Motor stall protection
- Low level ground fault
- Cooler and condenser freeze prevention*
- Low oil temperature
- Motor current imbalance
- Motor rotation reversal
- Excessive motor amps
- Motor starts limit
- VFD speed out of range
- High VFD inverter temperature*†
- DC bus voltage (Low/High)

Capacity control

- Leaving chilled liquid control
- Entering chilled liquid control
- Soft loading control by temperature or load ramping
- Hot gas bypass valve (optional)
- Power (demand) limiter
- Automatic chilled liquid reset (3 methods)
- Manual speed control

Interlocks

- Manual/automatic remote start
- Starting/stopping sequence
  - Pre-lube/post-lube
  - Pre-flow/post-flow
- Compressor run interlock
- Pre-start check of safeties and alerts
- Low chilled liquid (load) recycle
- Monitor/number compressor starts and run hours
- Manual reset of safeties

Indications

- Chiller operating status message
- Power-on
- Pre-start diagnostic check
- Compressor motor amps
- Alert (pre-alarm)††
- Alarm
- Contact for remote alarm
- Safety shutdown messages
- Elapsed time (hours of operation)
- Chiller input kW
- Demand kW

Drive control parameters

- Compressor 100% speed (Hz)
- Motor rated load kW
- Motor rated load amps
- Motor nameplate amps
- Motor nameplate RPM
- Motor nameplate kW
- Inverter PWM (pulse width modulation) frequency

*Can be configured by the user to provide alert indication at user-defined limit.
†Override protection: Causes compressor to first unload and then, if necessary, shut down.
**Will not require manual reset or cause an alarm if auto-restart after power failure is enabled.
††By display code only.

CONTROL PANEL DISPLAY (Front View)

ICVC ENGLISH DISPLAY IN ENGLISH UNITS

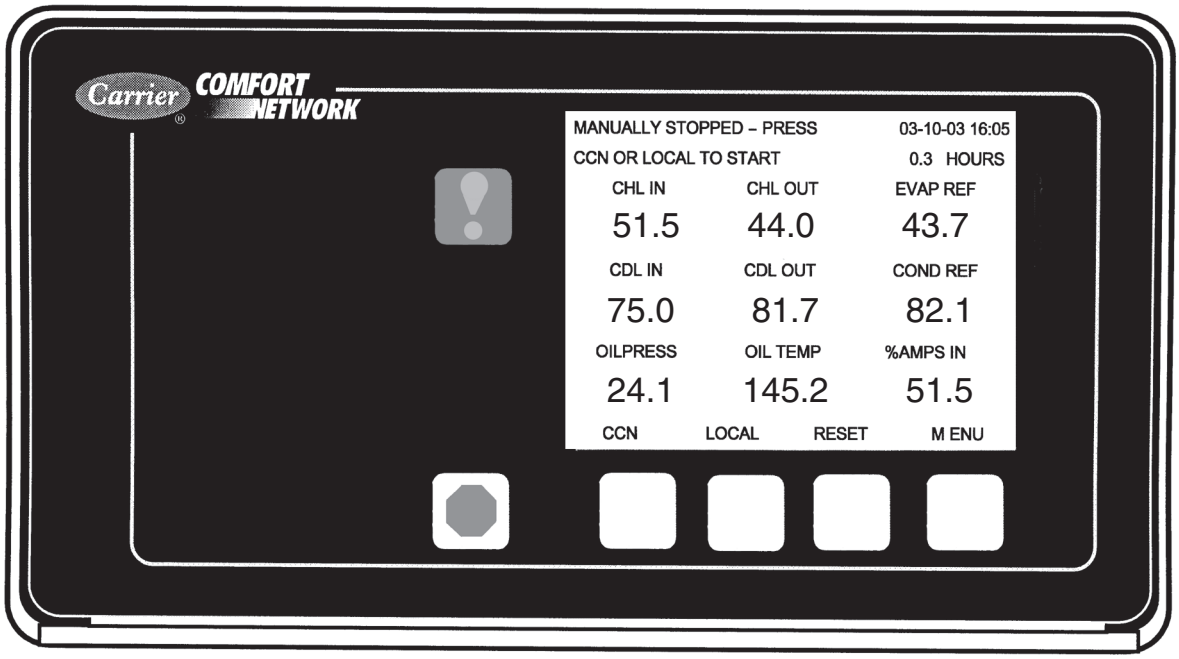

ICVC CHINESE DISPLAY IN METRIC UNITS

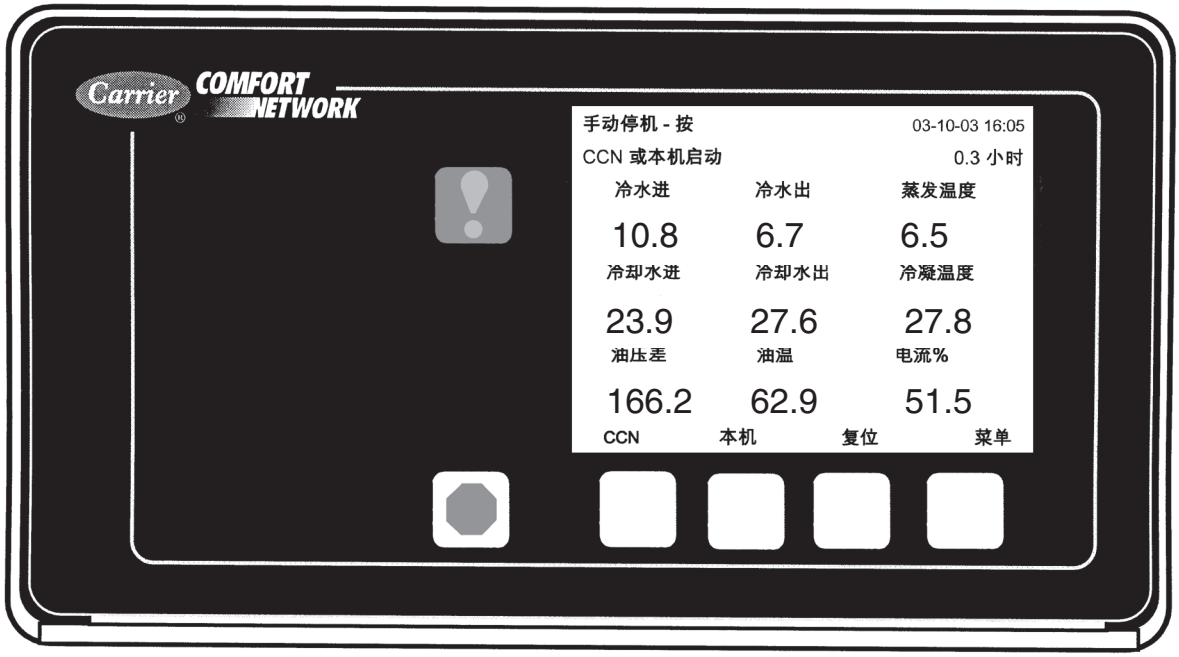

CCN COMMUNICATION WIRING FOR MULTIPLE CHILLERS (TYPICAL)

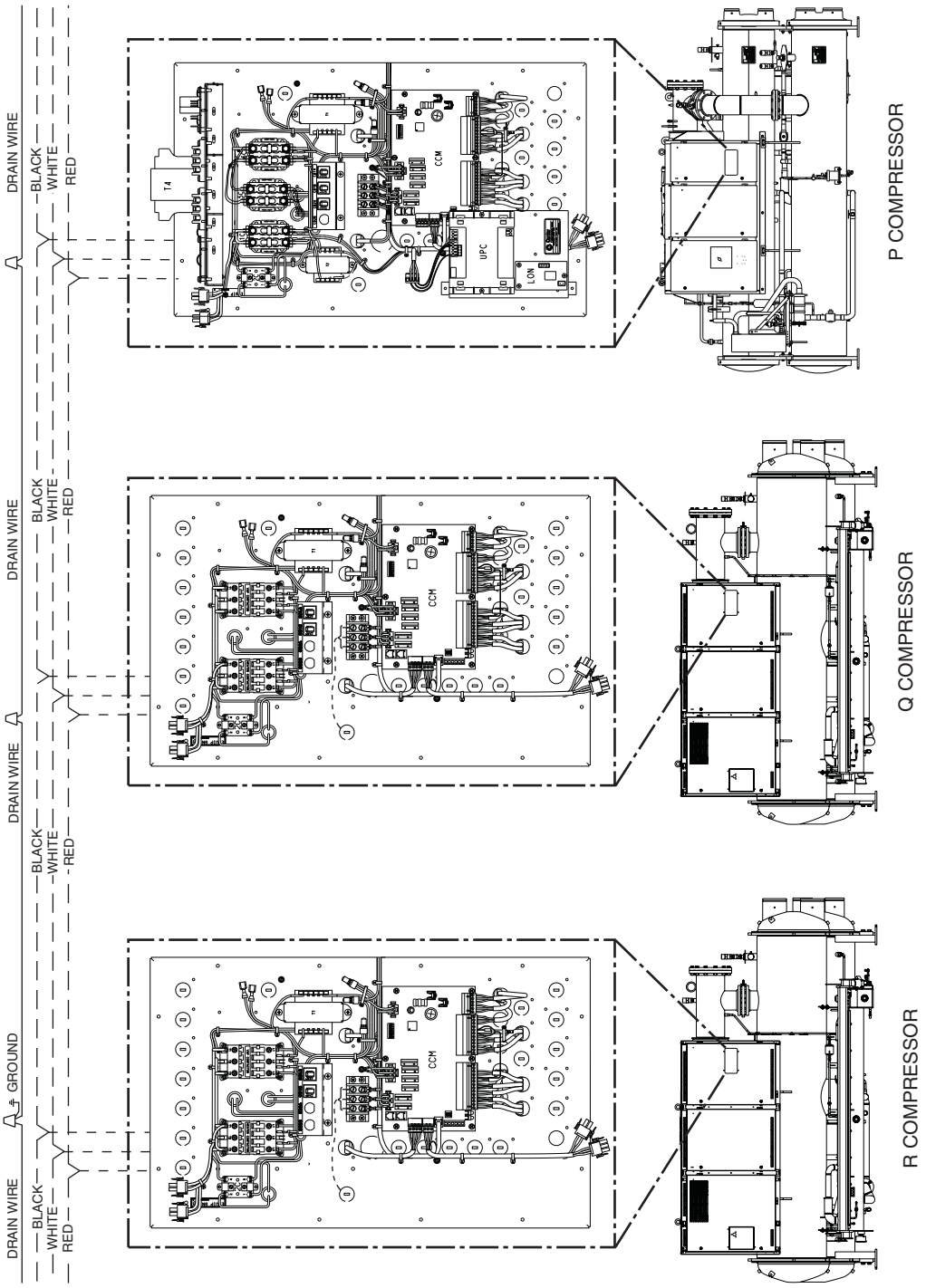

LEGEND

CCM — Chiller Control Module

Factory Wiring

Field Wiring

CONTROL SEQUENCE

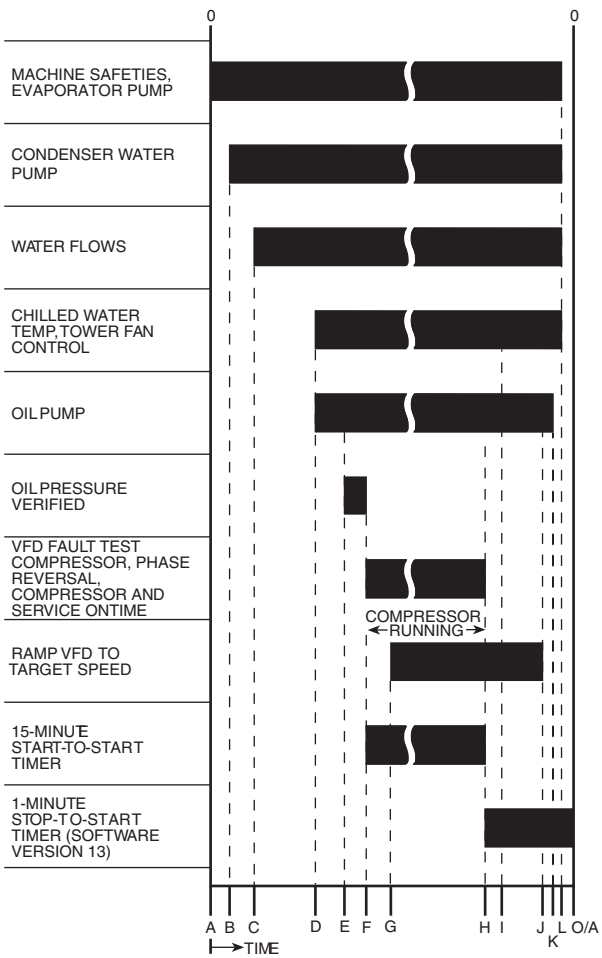

0 — Phase reversal monitored
A — START INITIATED: Pre-start checks are made; evaporator pump started
B — Condenser liquid pump started (5 seconds after A); tower fan control enabled
C — Liquid flows verified (30 sec to 5 minutes maximum after B)
D — Chilled liquid temperature checked against control point; oil pump on.
E — Oil pressure verified (oil pressure verified 45-300 sec after D).
F — VFD starts; phase reversal conditions monitored; compressor ontime and service ontime start; 15-minute inhibit timer starts (VFD fault tests for 15 sec after F)
G — Verify average current >5% within 15 sec after VFD start, ramp to VFD target speed.
H — Compressor reaches target speed, chiller set to running status
I — Shutdown initiated: Target VFD speed to 0% (or J occurs)
J — Ramp down until percent line current ≤ soft stop amps threshold (0-60 sec after I)
K — Oil pump relay off (1-20 sec after J)
L — Evaporator pump de-energized (60 sec after K); condenser pump and tower fan control may continue to operate if condenser pressure is high; evaporator pump may continue if in RECYCLE mode
O/A — Restart permitted (both inhibit timers expired) (minimum of 15 minutes after F; minimum of 3 minutes after L)

Control sequence

To start — Local start-up (manual start-up) is initiated by pressing the LOCAL or CCN menu softkey, which is indicated on the default international chiller visual control (ICVC) screen. Time schedule 01 or 03, respectively, must be in the Occupied mode and the internal 15-minute start-to-start and the 1-minute stop-to-start inhibit timers must have expired. All pre-start safeties are checked to verify that all prestart alerts and safeties are within limits (if one is not, an indication of the fault displays and the start will be delayed or is aborted). The signal is sent to start the cooler liquid pump. Five seconds later, the condenser liquid pump is energized. If satisfied, it checks the chilled liquid temperature against the control point. If the temperature is less than or equal to the chilled liquid control point, the condenser liquid pump is de-energized and the chiller goes into a recycle mode.

If the chilled liquid temperature is high enough, the start-up sequence continues. The oil pump is started and waits a minimum of 45 seconds to verify oil flow. Once oil flow is verified, the VFD is energized. The control will monitor for a phase reversal condition. At this time, the following occurs:

- The "start-to-stop" timer is activated.
- The "compressor on-time" and "service on-time" timers are activated.
- The "starts in 12-hour counter" advances by one.
- The "total compressor starts counter" advances by one.

Once started — If the VFD average current >5% within 15 seconds after VFD start, the machine enters run mode and speed will be ramped up to meet VFD target speed. Once the target speed is met the controls, enter the capacity control mode.

Shutdown sequence — The chiller shutdown is initiated if any of the following occur:

- The Stop button is pressed for at least one second (the alarm light blinks once to confirm the stop command).
- A recycle shutdown is initiated.
- The time schedule has gone into unoccupied mode.
- The chiller protective limit has been reached and the chiller is in alarm.
- The start/stop status is overridden to stop from the ICVC, CCN system, or building management system.

Once the controls shutdown sequence is initiated, the compressor is stopped and the VFD target speed is set to 0. If optional soft stop unloading is activated when the Stop button is pressed or the remote contacts open, motor speed decreases to a configured amperage level, and the compressor is stopped. The display indicates "Shutdown in Progress" while the motor speed decreases. Compressor ontime and service ontime timers stop once the current in all phases is <5%, indicating a VFD Stop Complete. The oil pump and cooler liquid pump are then deenergized. The condenser liquid pump shuts down when the refrigerant temperature or entering condenser liquid temperature is below pre-established limits. The 3-minute start-to-stop timer starts.

Restart — Restart is permitted after both inhibit timers have expired. If shutdown was due to a safety shutdown, the reset button must be depressed before restarting the chiller.

Typical piping and wiring

23XRV CHILLER
(UNIT WITH R COMPRESSOR SHOWN)

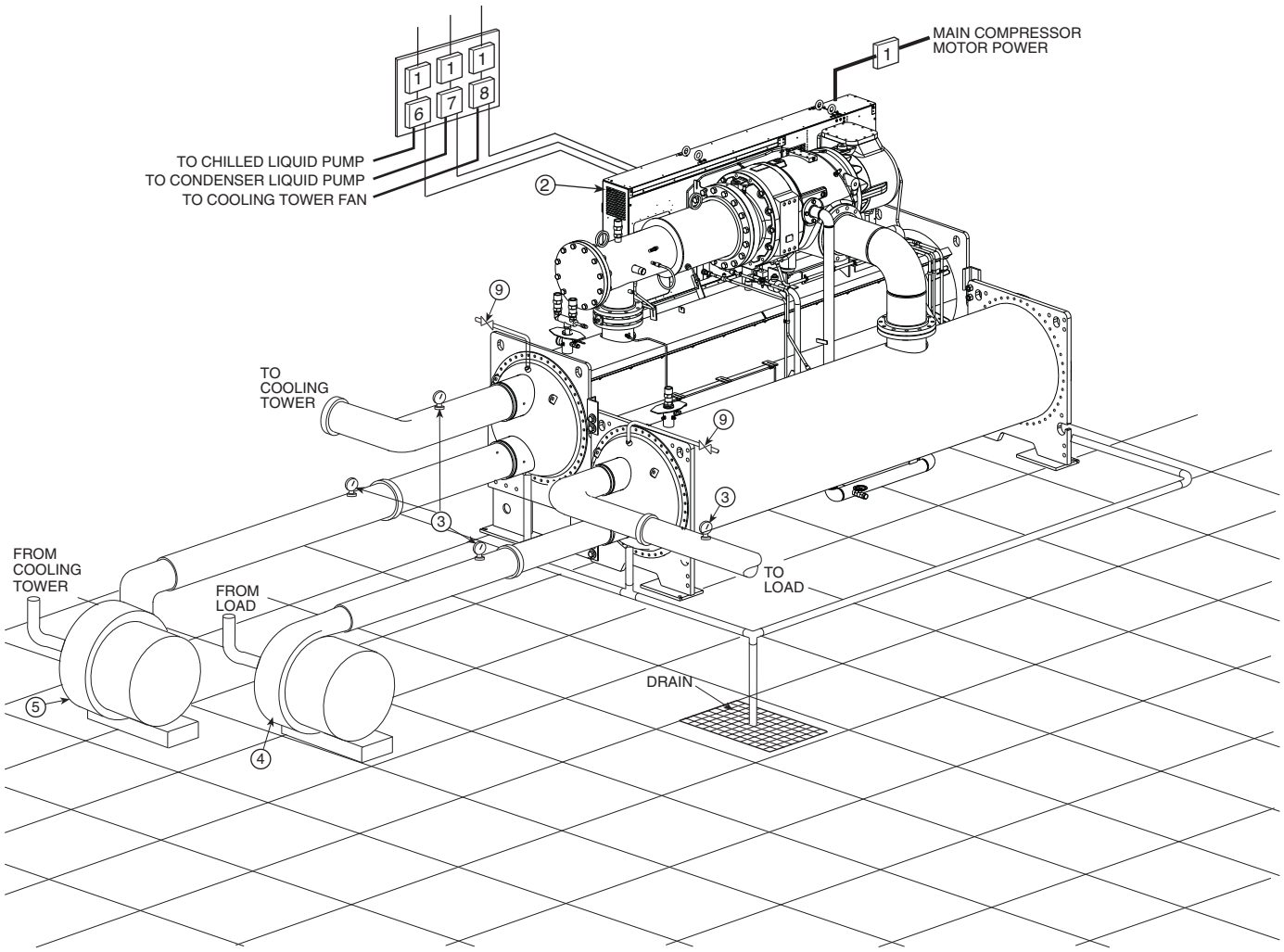

LEGEND

1 — Disconnect
2 — Unit-Mounted VFD/Control Center
3 — Pressure Gages
4 — Chilled Liquid Pump
5 — Condenser Liquid Pump
6 — Chilled Liquid Pump Starter
7 — Condenser Liquid Pump Starter
8 — Cooling Tower Fan Starter
9 — Vents
Piping
Control Wiring
Power Wiring

NOTES:

1. Operating Environment — Chiller should be installed in an indoor environment where the ambient temperature is between 40 to 104 F (4 to 40 C) with a relative humidity (non-condensing) of 95% or less. To ensure that electrical components operate properly, do not locate the chiller in an area exposed to dust, dirt, corrosive fumes, or excessive heat and humidity.
2. Wiring and piping (with flexible connections) shown are for general point-of-connection only and are not intended to show details for a specific installation. Certified field wiring and dimensional diagrams are available on request.
3. All wiring must comply with applicable codes.
4. Refer to Carrier System Design Manual for details regarding piping techniques.
5. Wiring not shown for optional devices such as:
   - remote start/stop
   - remote alarms
   - optional safety device
   - 4 to 20 mA resets
   - optional remote sensors
   - kW output
   - head pressure reference
6. Flow switches are NOT required.
7. Carrier suggests vibration spring isolation for chillers installed in upper floors. Carrier suggests that a structural engineer be consulted if the transmission of vibrations from mechanical equipment is of concern.

Control wiring schematic

23XRV COMPONENT ARRANGEMENT

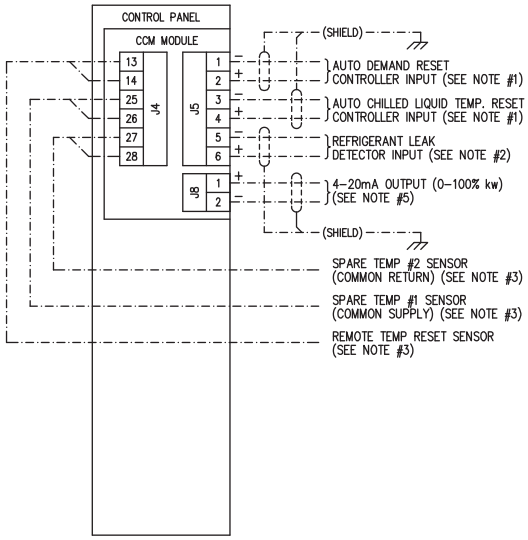

CONTROL PANEL OPTIONAL WIRING

NOTES:

1. THIS FEATURE IS STANDARD IN THE 23XR CONTROLS, BUT REQUIRES A CONTROLLER WITH A NON–GROUNDED 4–20mA OR 1–5Vdc OUTPUT SIGNAL, NOT BY CARRIER.
2. THIS FEATURE IS STANDARD IN THE 23XR CONTROLS, BUT REQUIRES AN EXTERNAL CONTROLLER WITH A NON–GROUNDED 4–20mA OUTPUT SIGNAL, NOT BY CARRIER.
3. THIS FEATURE IS STANDARD IN THE 23XR CONTROLS, BUT REQUIRES A SENSOR PACKAGE OPTION, BY CARRIER.
4. PINS SHOWN FOR REFERENCE ONLY. ACTUAL PIN LAYOUT NOT SHOWN.
5. THIS FEATURE IS STANDARD IN THE 23XR CONTROLS. CONTROLLERS MONITORING THIS SIGNAL MUST HAVE A NON–GROUNDED INPUT WITH A MAXIMUM IMPEDANCE OF 500 OHMS.

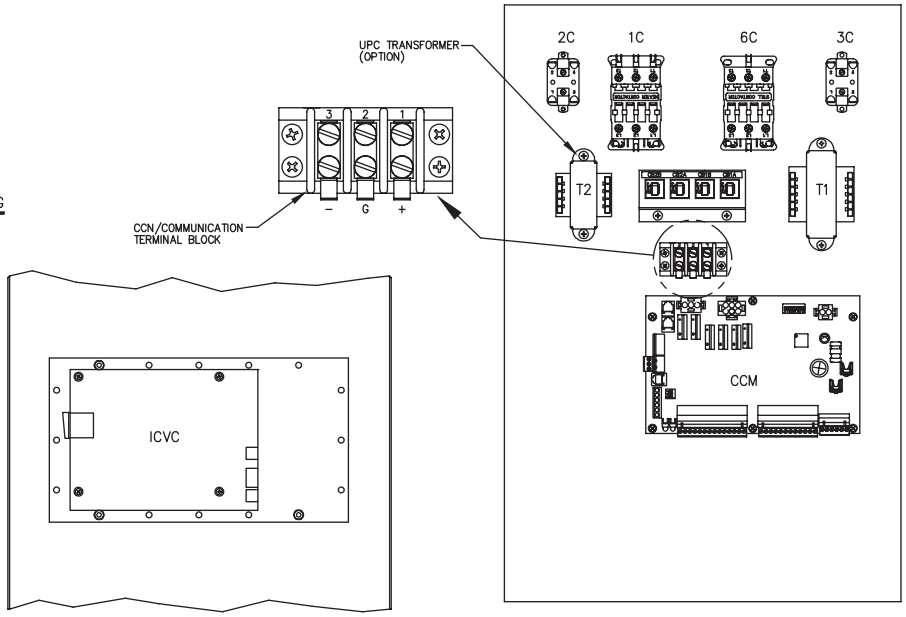

INSIDE PANEL DOOR

CONTROL PANEL COMPONENT LAYOUT

UNITS WITH Q,R COMPRESSORS

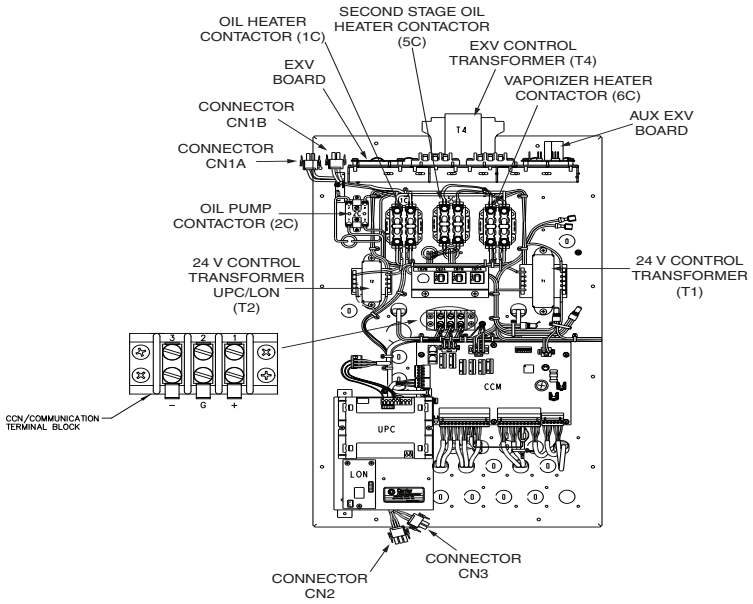

UNITS WITH P COMPRESSORS

LEGEND

CCM — Chiller Control Module
CCN — Carrier Comfort Network®
ICVC — International Chiller Visual Controller

23XRV FRAME SIZE 30-57 MACHINE FOOTPRINT

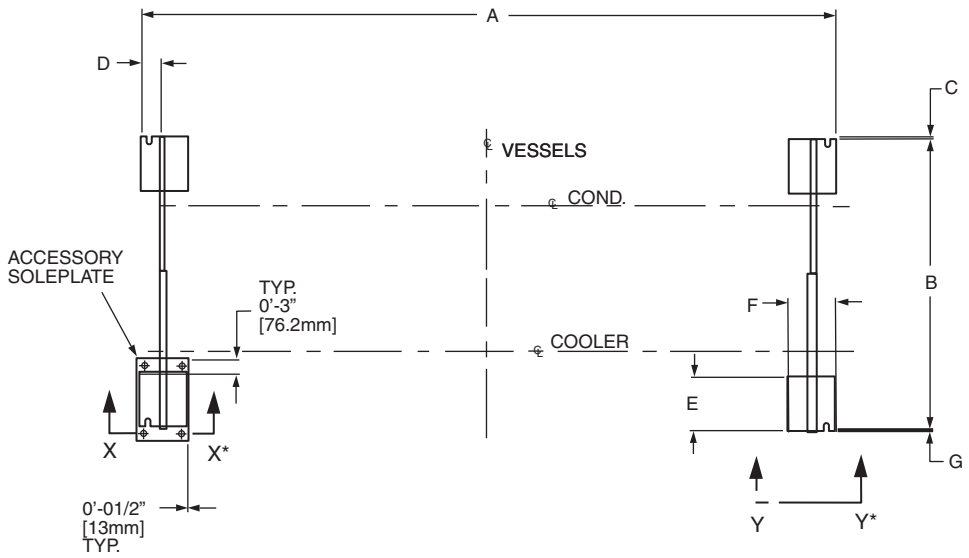

*See detail on page 24.

23XRV HEAT EXCHANGER SIZE 30-57	DIMENSIONS (ft-in.)							DIMENSIONS (mm)						
	A	B	C	D	E	F	G	A	B	C	D	E	F	G
30-32	12-10 3/4	5-4 1/4	0	0-3 5/8	1-1 3/4	0-9	0-1/2	3931	1632	0	92	349	229	13
35-37	14- 7 1/4	5-4 1/4	0	0-3 5/8	1-1 3/4	0-9	0-1/2	4451	1632	0	92	349	229	13
40-42	12-10 3/4	6-0	0-1 1/2	0-3 5/8	1-1 3/4	0-9	0-1/2	3931	1829	38	92	349	229	13
45-47	14- 7 1/4	6-0	0-1 1/2	0-3 5/8	1-1 3/4	0-9	0-1/2	4451	1829	38	92	349	229	13
50-52	12-10 3/4	6-5 1/2	0- 1/2	0-3 5/8	1-1 3/4	0-9	0-1/2	3931	1969	13	92	349	229	13
55-57	14- 7 1/4	6-5 1/2	0- 1/2	0-3 5/8	1-1 3/4	0-9	0-1/2	4451	1969	13	92	349	229	13

23XRV FRAME SIZE A MACHINE FOOTPRINT

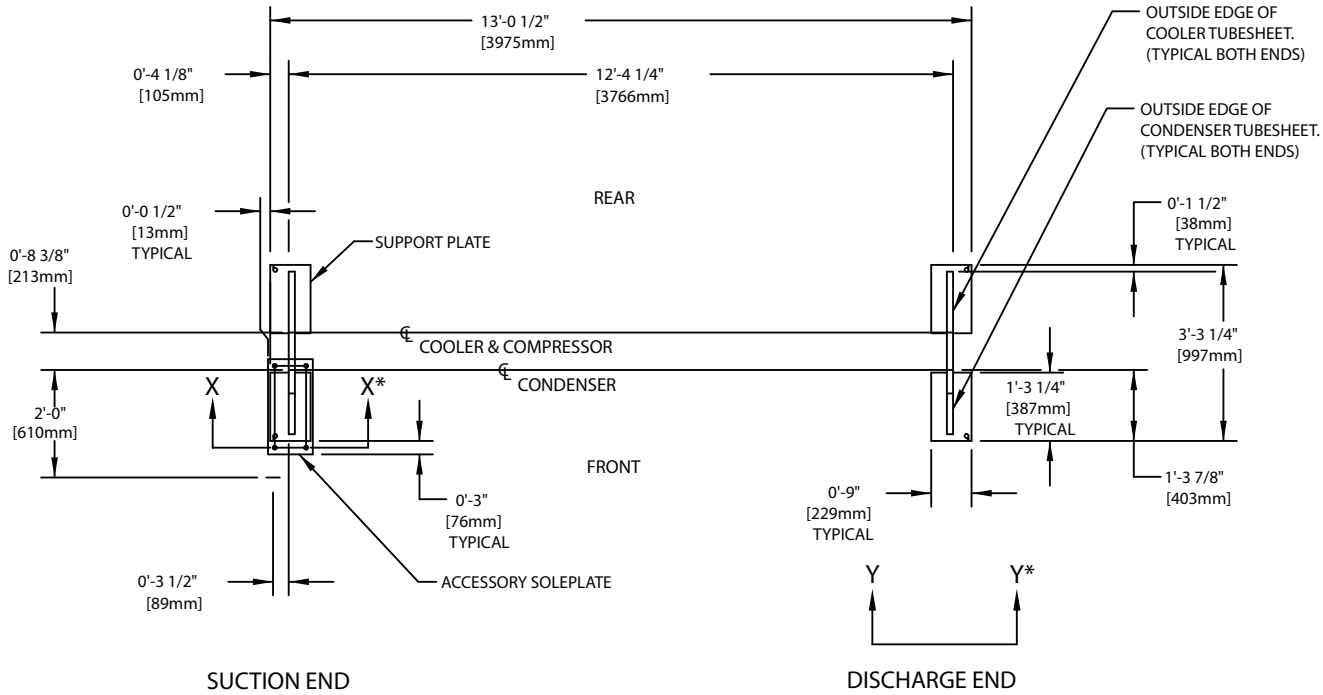

*See detail on page 24.

23XRV FRAME SIZE B MACHINE FOOTPRINT

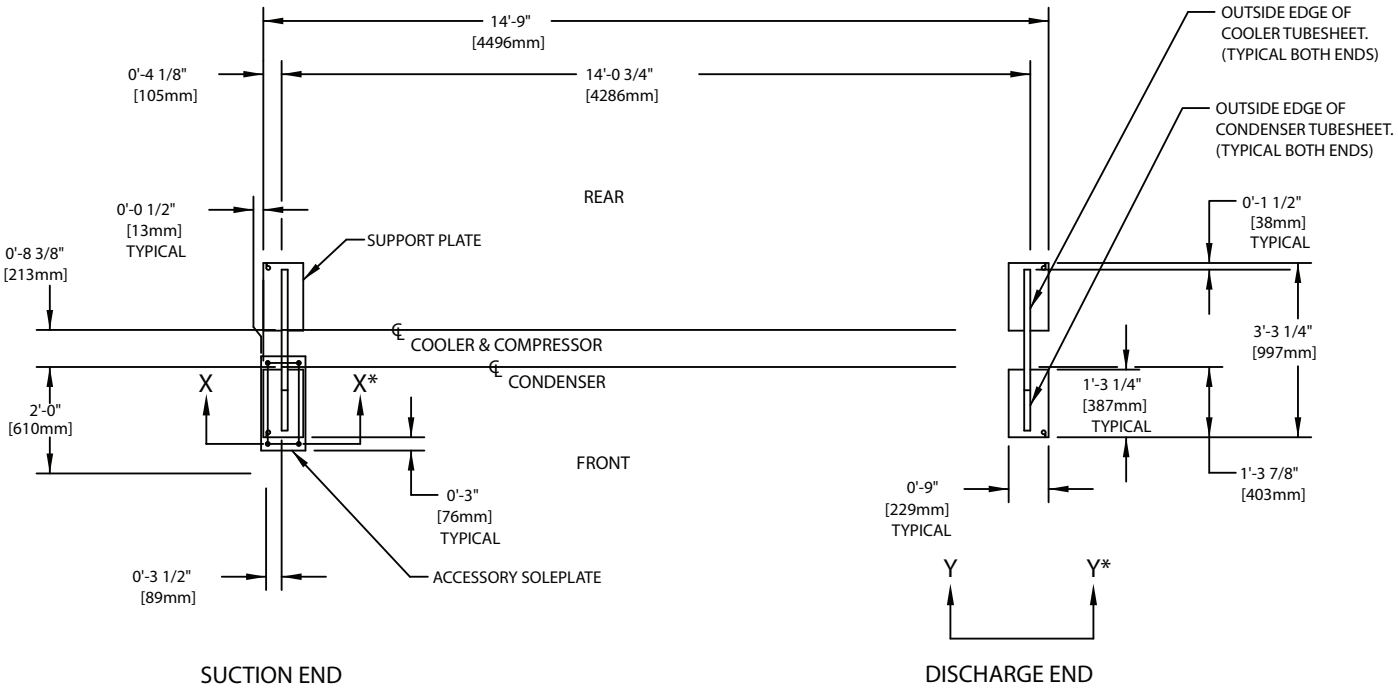

*See detail on page 24.

23XRV ISOLATION WITH ACCESSORY SOLEPLATE PACKAGE

TYPICAL ISOLATION

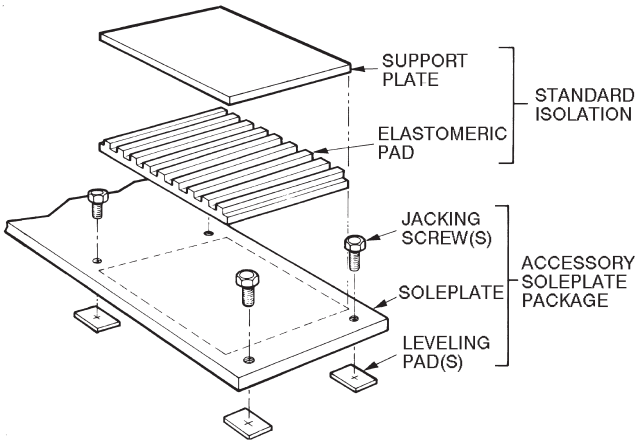

STANDARD ISOLATION

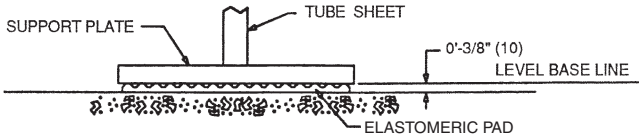

VIEW Y-Y

ISOLATION WITH ISOLATION PACKAGE ONLY (STANDARD)

NOTE: Isolation package includes 4 elastomeric pads.

ACCESSORY SOLEPLATE DETAIL

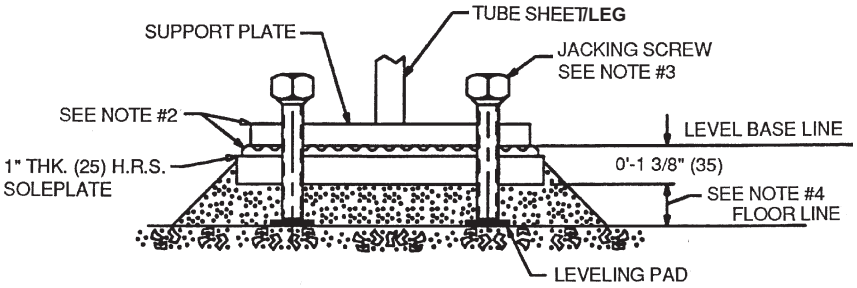

VIEW X-X

NOTES:
1. Dimensions in ( ) are in millimeters.
2. Accessory soleplate package includes 4 soleplates, 16 jacking screws and leveling pads. Requires isolation package.
3. Jacking screws to be removed after grout has set.
4. Thickness of grout will vary, depending on the amount necessary to level chiller. Use only pre-mixed non-shrinking grout, Ceilcote 748 or Chemrex Embeco 636 Plus Grout, 0′-1 1/2″ (38.1) to 0′-2 1/4″ (57) thick.
5. Service clearance under the chiller is enhanced if leveling pads are not extended along the entire length of the heat exchangers.

23XRV NOZZLE ARRANGEMENTS

NOZZLE-IN-HEAD WATERBOXES

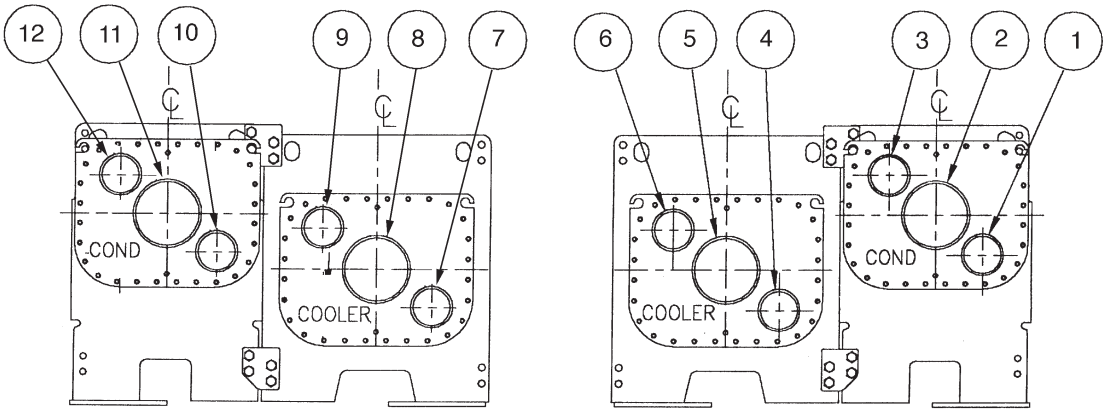

DISCHARGE END SUCTION END

FRAME 3

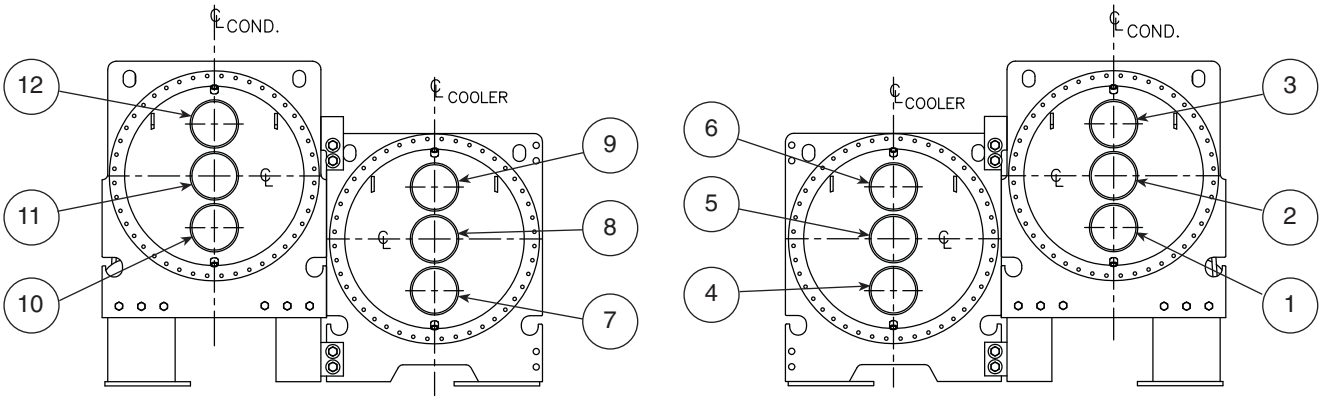

DISCHARGE END SUCTION END

FRAMES 4 AND 5

23XRV NOZZLE ARRANGEMENTS (cont)

NOZZLE-IN-HEAD WATERBOXES (cont)

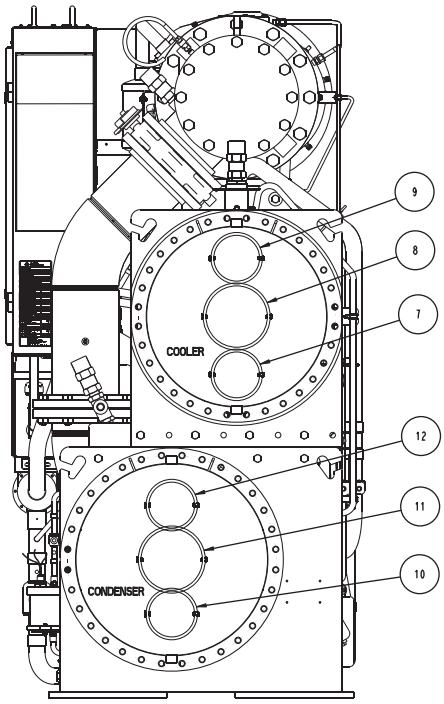

DISCHARGE END

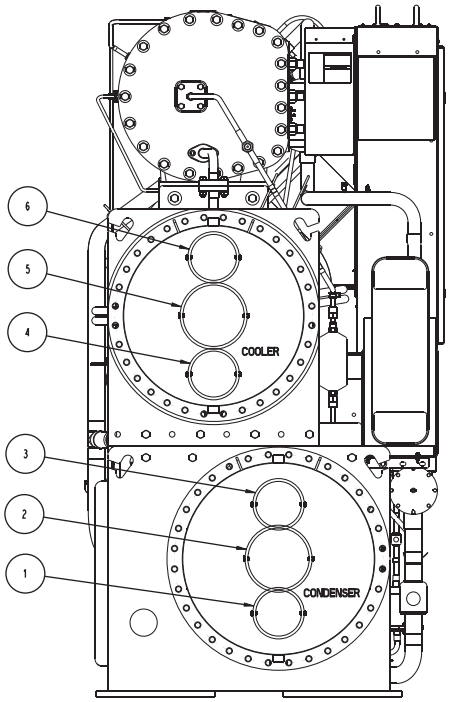

SUCTION END

FRAMES A,B

NOZZLE ARRANGEMENT CODES FOR ALL 23XRV NOZZLE-IN-HEAD WATERBOXES

PASS	COOLER WATERBOXES		
	In	Out	Arrangement Code*
1	8	5	A
	5	8	B
2	7	9	C
	4	6	D
3	7	6	E
	4	9	F

*Refer to certified drawings.

PASS	CONDENSER WATERBOXES		
	In	Out	Arrangement Code*
1	11	2	P
	2	11	Q
2	10	12	R
	1	3	S
3	10	3	T
	1	12	U

23XRV NOZZLE ARRANGEMENTS (cont)

MARINE WATERBOXES

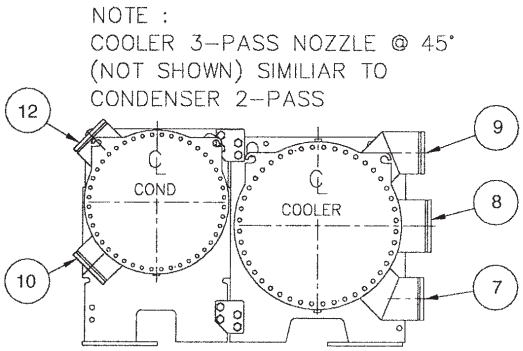

DISCHARGE END

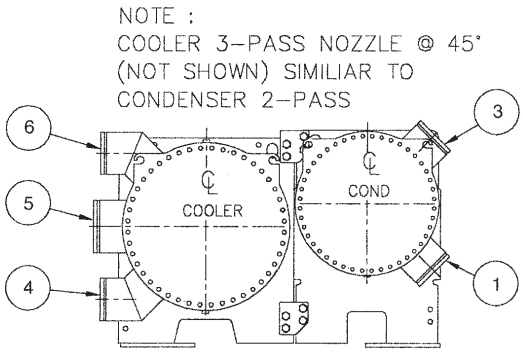

SUCTION END

FRAME 3

NOZZLE ARRANGEMENT CODES

PASS	COOLER WATERBOXES		
	In	Out	Arrangement Code
1	8	5	A
	5	8	B
2	7	9	C
	4	6	D
3	7	6	E
	4	9	F

PASS	CONDENSER WATERBOXES		
	In	Out	Arrangement Code
1	—	—	—
	—	—	—
2	10	12	R
	1	3	S
3	—	—	—
	—	—	—

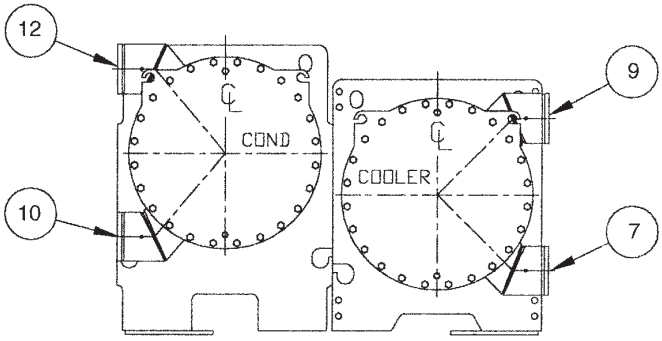

DISCHARGE END

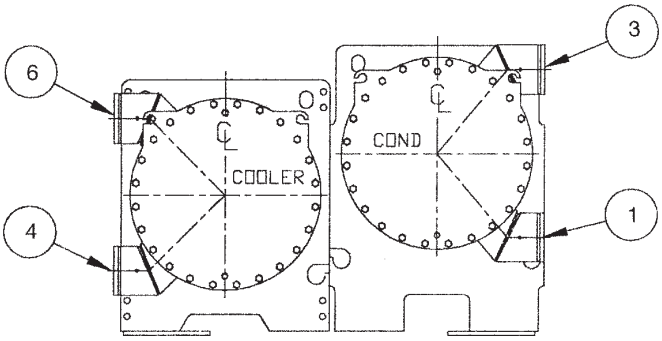

SUCTION END

FRAMES 4, AND 5

NOZZLE ARRANGEMENT CODES

PASS	COOLER WATERBOXES		
	In	Out	Arrangement Code
1	9	6	A
	6	9	B
2	7	9	C
	4	6	D
3	7	6	E
	4	9	F

PASS	CONDENSER WATERBOXES		
	In	Out	Arrangement Code
1	—	—	—
	—	—	—
2	10	12	R
	1	3	S
3	—	—	—
	—	—	—

23XRV NOZZLE ARRANGEMENTS (cont)

MARINE WATERBOXES (cont)

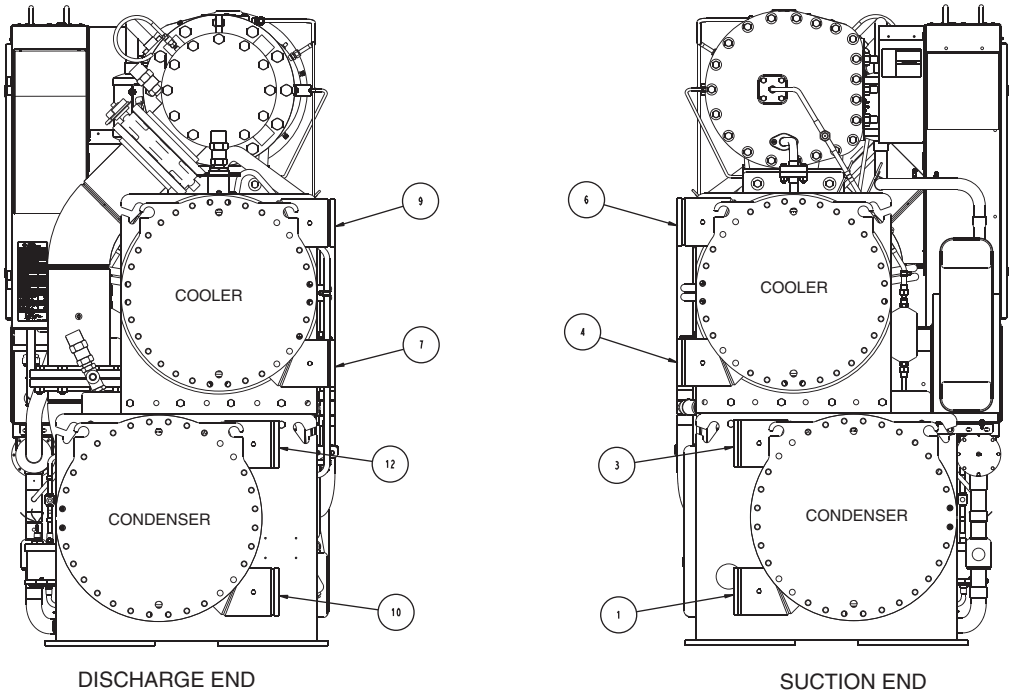

FRAMES A,B

NOZZLE ARRANGEMENT CODES

PASS	COOLER WATERBOXES		
	In	Out	Arrangement Code
1	9	6	A
	6	9	B
2	7	9	C
	4	6	D
3	7	6	E
	4	9	F

PASS	CONDENSER WATERBOXES		
	In	Out	Arrangement Code
1	—	—	—
	—	—	—
2	10	12	R
	1	3	S
3	—	—	—
	—	—	—

RELIEF VALVE LOCATIONS

LOCATION	FRAME SIZE	RELIEF VALVE OUTLET SIZE	QUANTITY WITHOUT ISOLATION VALVES	QUANTITY WITH ISOLATION VALVES
Discharge Pipe Assembly	3-5	$1^1/_4$-in. NPT FEMALE CONNECTOR	1	1
	A,B	$1^1/_4$-in. NPT FEMALE CONNECTOR	N/A	1
Cooler	3-5, A,B	$1^1/_4$-in. NPT FEMALE CONNECTOR	2	1
Condenser	3-5, A,B	$1^1/_4$-in. NPT FEMALE CONNECTOR	2	2
Optional Storage Tank	N/A	1-in. NPT FEMALE CONNECTOR	2	2

NOTE: All valves relieve at 185 psig (1275 kPa).

RELIEF VALVE ARRANGEMENTS

WITH OPTIONAL ISOLATION OF DISCHARGE AND COOLER

UNITS WITH P COMPRESSOR

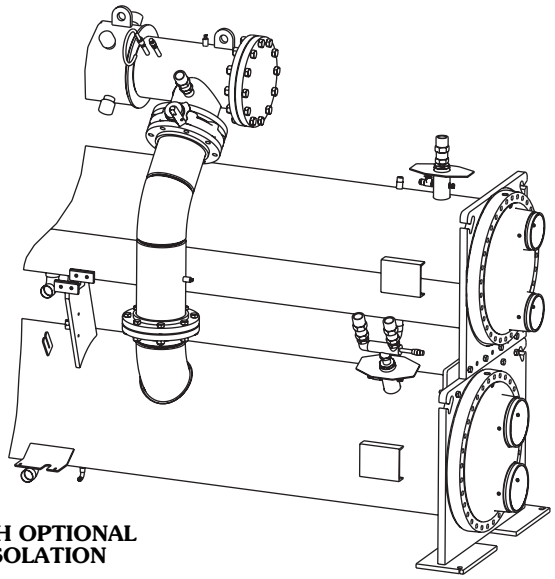

WITH OPTIONAL ISOLATION

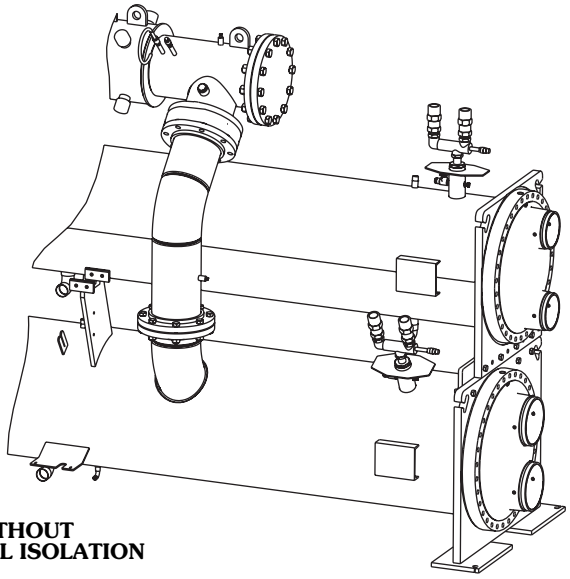

WITHOUT OPTIONAL ISOLATION

UNITS WITH Q COMPRESSOR

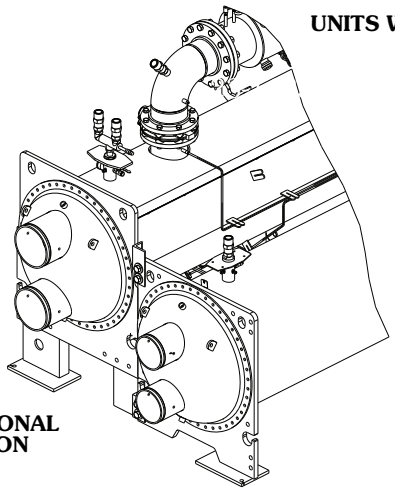

WITH OPTIONAL ISOLATION

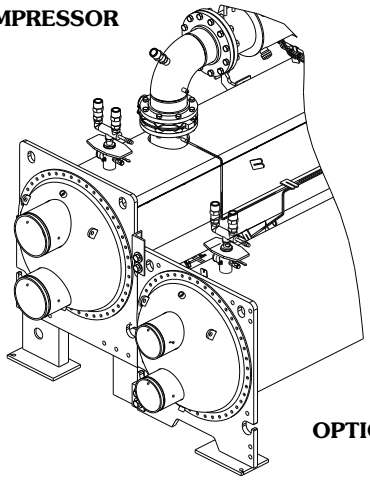

WITHOUT OPTIONAL ISOLATION

UNITS WITH R COMPRESSOR

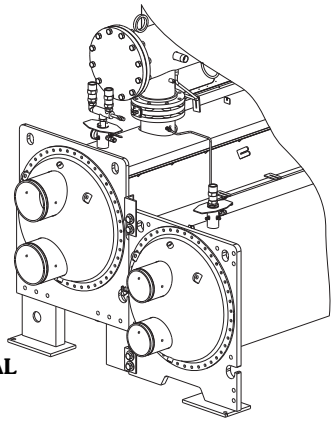

WITH OPTIONAL ISOLATION

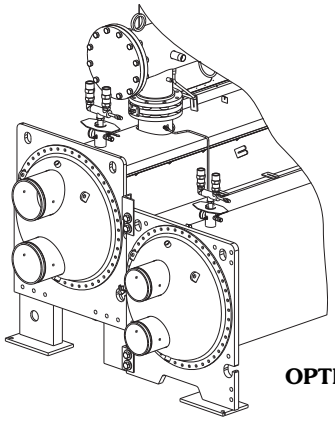

WITHOUT OPTIONAL ISOLATION

Vent and drain connections

Nozzle-in-head waterboxes have vent and drain connections on covers. Marine waterboxes have vent and drain connections on waterbox shells.

Provide high points of the chiller piping system with vents and the low points with drains. If shutoff valves are provided in the main liquid pipes near the unit, a minimal amount of system liquid is lost when the heat exchangers are drained. This reduces the time required for drainage and saves on the cost of re-treating the system liquid.

It is recommended that pressure gages be provided at points of entering and leaving liquid to measure pressure drop through the heat exchanger. Gages may be installed as shown in Pressure Gage Location table. Pressure gages installed at the vent and drain connections do not include nozzle pressure losses.

Use a reliable differential pressure gage to measure pressure differential when determining liquid flow. Regular gages of the required pressure range do not have the accuracy to provide accurate measurement of flow conditions.

PRESSURE GAGE LOCATION

NUMBER OF PASSES	GAGE LOCATION (Cooler or Condenser)
1 or 3	One gage in each waterbox
2	Two gages in waterbox with nozzles

ASME stamping

All 23XRV heat exchangers are constructed in accordance with ASHRAE (American Society of Heating, Refrigerating, and Air-Conditioning Engineers) 15 Safety Code for Mechanical Refrigeration (latest edition). This code, in turn, requires conformance with ASME (American Society of Mechanical Engineers) Code for Unfired Pressure Vessels wherever applicable.

Each heat exchanger and economizer (if equipped) is ASME 'U' stamped on the refrigerant side of each vessel.

Relief valve discharge pipe sizing

See page 28 for number of relief valves.

Relief valve discharge piping size should be calculated per the current version of the ASHRAE 15, latest edition, code using the tabulated C factors for each vessel shown in the table below.

23XRV RELIEF VALVE DISCHARGE PIPE SIZING

HEAT EXCHANGER	FRAME SIZE	VESSEL REQUIRED C FACTOR (lb air/Min)	RELIEF VALVE RATED C FACTOR (lb air/Min)	FIELD CONNECTION SIZE (FPT)
COOLER	A	36.8	72.1	1 1/4″
	B	42.0	72.1	1 1/4″
	30 to 32	43.4	72.1	1 1/4″
	35 to 37	49.5	72.1	1 1/4″
	40 to 42	50.4	72.1	1 1/4″
	45 to 47	57.4	72.1	1 1/4″
	50 to 52	53.7	72.1	1 1/4″
	55 to 57	61.1	72.1	1 1/4″
CONDENSER	A	39.2	72.1	1 1/4″
	B	44.8	72.1	1 1/4″
	30 to 32	41.4	72.1	1 1/4″
	35 to 37	47.1	72.1	1 1/4″
	40 to 42	47.1	72.1	1 1/4″
	45 to 47	53.7	72.1	1 1/4″
	50 to 52	51.2	72.1	1 1/4″
	55 to 57	58.3	72.1	1 1/4″

Carrier further recommends that an oxygen sensor be installed to protect personnel. Sensor should be able to sense the depletion or displacement of oxygen in the machine room below 19.5% volume oxygen per ASHRAE 15, latest edition.

DESIGN AND TEST PRESSURES (23XRV)

PRESSURES	SHELL SIDE (Refrigerant)		STANDARD TUBE SIDE (Liquid)		OPTIONAL TUBE SIDE (Liquid)	
	psig	kPa	psig	kPa	psig	kPa
Leak Test at Design Pressure*	185	1276	150	1034	300	2068
Hydrostatic	—	—	195	1344	390	2689
Proof Test*	204	1407	—	—	—	—

*Nitrogen/Helium.

HEAT EXCHANGER MATERIAL SPECIFICATIONS

ITEM	MATERIAL	SPECIFICATION
Shell	HR Steel	ASME SA516 GR .70
Tube Sheet	HR Steel	ASME SA516 GR .70
Condenser/Cooler Waterbox Cover		
Frames A & B 2-Pass Victaulic NIH	Cast Iron	ASTM A-536*
All Others	HR Steel	ASME SA516 GR .70, SA-36, SA-285 GRC, or Q345R
Condenser/Cooler Waterbox Shell	HR Steel	ASME SA675 GR .60, SA-516 GR .70 or SA-181 CL70, SA-36, SA-675 GR70, SAE AME 7496, or ASTM A139 GRB
Tubes	Finned Copper	ASME SB359
Discharge/Suction		
Pipe	Steel	ASME SA106 GRB
Flanges	Steel	ASME SA105

*Cannot weld to A-536.

LEGEND

ASME — American Society of Mechanical Engineers
HR — Hot Rolled
NIH — Nozzle-in-Head

Insulation

23XRV MINIMUM FIELD-INSTALLED INSULATION REQUIREMENTS

COMPONENT	SIZE	INSULATION	
		ft^2	m^2
Cooler	A	83	7.7
	B	93	8.6
	30-32	96	8.9
	35-37	108	10.0
	40-42	109	10.1
	45-47	122	11.3
	50-52	115	10.7
	55-57	130	12.1
Misc. Liquid Lines	All Sizes	21	2.0
Economizer	All Sizes	20	1.9
Compressor Motor	All Sizes	17	1.6

Factory insulation — Thermal insulation is factory-provided to the following areas:

- Cooler (not including waterbox)
- Suction line
- Compressor and motor
- Oil cooling line and oil return system line (oil and refrigerant lines at or near evaporator pressure are insulated)
- VFD cooling line (oil and refrigerant lines at or near evaporator pressure are insulated, Q and R compressor only)
- Motor cooling line
- Vaporizer
- Liquid line and discharge line
- Float chamber (Q and R compressor only)
- Optional economizer (including vent line and economizer muffler) for Q and R compressors; vent line and economizer muffler only for P compressors

Factory insulation is not available for the waterboxes.

Thermal insulation consists of 3 layers composed of $^1/_2$- in. (13 mm) closed cell, $^1/_2$-in. (13 mm) open cell, and $^3/_{16}$-in. (5 mm) vinyl for a total of 1 $^3/_{16}$-in. (31 mm) minimum. The $^1/_2$-in. (13 mm) closed cell foam has a thermal conductivity K value of 0.28 (BTU in.)/(hr sq ft °F) [0.0404 W/(m °C)] and conforms with Underwriters Laboratories (UL) Standard 94, Classification 94 HF-1. Both the $^1/_2$-in. foam and the $^3/_{16}$-in. vinyl layer will pass flammability test method MVSS 302.

Field insulation — The factory insulation provides excellent protection against condensation under most operating conditions. If temperatures in the equipment area exceed the maximum design conditions, extra insulation is recommended.

If the machine is to be field insulated, obtain the approximate areas from the 23XRV Minimum Field-Installed Insulation Requirements table.

Insulation of waterbox is made only in the field and this area is not included in 23XRV Minimum Field-Installed Insulation Requirements table. When insulating the covers, allow for service access and removal of covers. To estimate water-box cover areas, refer to certified drawings.

High humidity jobsite locations may require field supplied and installed insulation on the float chamber, suction housing, and the lower half of the condenser.

Minimum fluid loop volume

For 23XRV units with Q or R compressors, minimum fluid volume must be in excess of 1.5 gal per ton (1.6 L per kW) for comfort cooling applications and apply 3 to 5 gal per ton (3.2 to 5.4 L per kW) fluid loop volume for process applications.

For 23XRV units with P compressors, minimum fluid volume must be in excess of 3.0 gal per ton (3.2 L per kW) for comfort cooling applications and apply 6 to 10 gal per ton (6.5 to 10.7 L per kW) fluid loop volume for process applications.

Guide specifications

Variable Speed Screw Chiller with Greenspeed® Intelligence

HVAC Guide Specifications

Size Range: **175 to 550 Tons (615 to 1934 kW) Nominal**

Carrier Model Number: **23XRV**

Part 1 — General

1.01 SYSTEM DESCRIPTION

A. Microprocessor-controlled liquid chiller shall use a semi-hermetic screw compressor using refrigerant HFC-134a only.

B. If a manufacturer proposes a liquid chiller using HCFC-123 refrigerant, which has a planned phase out date, then the manufacturer shall include in the chiller price:

1. A vapor activated alarm system consisting of all alarms, sensors, safeties, and ventilation equipment as required by ANSI/ASHRAE (American National Standards Institute/American Society of Heating, Refrigerating and Air-Conditioning Engineers) Standard 15 Safety Code for Mechanical Refrigeration (latest edition) with the quotation. System shall be capable of responding to HCFC-123 levels of 10 ppm Allowable Exposure Limit (AEL).
2. A free-standing refrigerant storage tank and pumpout unit shall be provided. The storage vessels shall be designed per ASME (American Society of Mechanical Engineers) Section VIII Division 1 code with 300 psig (2068 kPa) design pressure. Double relief valves per ANSI/ASHRAE 15, latest edition, shall be provided. The tank shall include a liquid level gage and pressure gage. The pumpout unit shall use a semi-hermetic reciprocating compressor with water-cooled condenser. Condenser water piping, 3-phase motor power, and 115-volt control power shall be installed at the jobsite by the installing contractor.
3. Zero emission purge unit capable of operating even when the chiller is not operating.
4. Back-up relief valve to rupture disk.
5. Factory-installed chiller pressurizing system to prevent leakage of noncondensables into the chiller during shutdown periods.
6. Plant room ventilation.
7. Removal and disposal of refrigerant at the end of the phase out period.
8. Chillers utilizing a purge unit shall include in the machine price the costs to perform the following regular maintenance procedures:
   a. Weekly: Check refrigerant charge.
   b. Quarterly: Charge purge unit dehydrator at least quarterly, more often if necessary. Clean foul gas strainer. Perform chemical analysis of oil.
   c. Annually: Clean and inspect all valves. Drain and flush purge shell. Clean orifices.

1.02 QUALITY ASSURANCE

A. Chiller performance shall be rated in accordance with AHRI (Air-Conditioning, Heating and Refrigeration Institute) Standard 550/590, latest edition.

B. Equipment and installation shall be in compliance with ANSI/ASHRAE 15 (latest edition).

C. Cooler and condenser refrigerant side shall include ASME "U" stamp and nameplate certifying compliance with ASME Section VIII, Division 1 code for unfired pressure vessels.

D. A manufacturer's data report is required to verify pressure vessel construction adherence to ASME vessel construction requirements. Form U-1 as required per ASME code rules is to be furnished to the owner. The U-1 Form must be signed by a qualified inspector, holding a National Board Commission, certifying that construction conforms to the latest ASME Code Section VIII, Div. 1 for pressure vessels. The ASME symbol "U" must also be stamped on the heat exchanger. Vessels specifically exempted from the scope of the code must come with material, test, and construction methods certification and detailed documents similar to ASME U-1; further, these must be signed by an officer of the company.

E. Chiller shall be designed and constructed to meet UL and UL of Canada requirements and have labels appropriately affixed.

F. The management system governing the manufacture of this product is ISO (International Organization for Standardization) 9001:2008 certified.

G. Each compressor assembly shall undergo a mechanical run-in test to verify vibration levels, oil pressures, and temperatures are within acceptable limits. Each compressor assembly shall be proof tested at a minimum 204 psig (1407 kPa) and leak tested at 185 psig (1276 kPa) with a tracer gas mixture.

H. Entire chiller assembly shall be proof tested at 204 psig (1407 kPa) and leak tested at 185 psig (1276 kPa) with a tracer gas mixture on the refrigerant side. The leak test shall not allow any leaks greater than 0.5 oz per year of refrigerant. The water side of each heat exchanger shall be hydrostatically tested at 1.3 times rated working pressure.

I. Prior to shipment, the chiller automated controls test shall be executed to check for proper wiring and ensure correct controls operation.

J. Chillers shall have factory-mounted, factory-wired and factory-tested unit-mounted variable frequency drive (VFD). Proper VFD operation shall be confirmed prior to shipment.

1.03 DELIVERY, STORAGE AND HANDLING

A. Unit shall be stored and handled in accordance with manufacturer's instructions.

B. Unit shall be shipped with all refrigerant piping and control wiring factory-installed.

C. Unit shall be shipped charged with oil and full charge of refrigerant HFC-134a or a nitrogen holding charge as specified on the equipment schedule.

D. Unit shall be shipped with firmly attached labels that indicate name of manufacturer, chiller model number, chiller serial number, and refrigerant used.

E. If the unit is to be exported, the manufacturer shall provide sufficient protection against sea water corrosion, making the unit suitable for shipment in a standard open top ocean shipping container.

F. Chiller and starter shall be stored indoors, protected from construction dirt and moisture. Chiller shall be inspected under shipping tarps, bags, or crates to be sure water has not collected during transit. Protective shipping covers shall be kept in place until machine is ready for installation. The inside of the protective cover shall meet the following criteria:

1. Temperature is between 40 F (4.4 C) and 120 F (48.9 C)
2. Relative humidity is between 10% and 80% non-condensing.

1.04 WARRANTY

Warranty shall include parts and labor for one year after start-up or 18 months from shipment, whichever occurs first. A refrigerant warranty shall be provided for a period of 5 years (North America only).

Part 2 — Products

2.01 EQUIPMENT

A. General:

Factory-assembled, single piece, liquid chiller shall consist of compressor, motor, VFD, lubrication system, cooler, condenser, initial oil and refrigerant operating charges, microprocessor control system, and documentation required prior to start-up.

B. Compressor:

1. One variable speed screw compressor of the high performance type.
2. Compressor and motor shall be hermetically sealed into a common assembly and arranged for easy field servicing.
3. The compressor motor shall be accessible for servicing without removing the compressor base from the chiller. Connections to the compressor casing shall use O-rings and gaskets to reduce the occurrence of refrigerant leakage. Connections to the compressor shall be flanged or bolted for easy disassembly.
4. Compressor bearings must have individual design life of 50 years or greater when operating at AHRI conditions.
5. Compressor shall provide capacity modulation from 100% to 15% capacity without the use of hot gas bypass or mechanical unloaders.
6. Compressor shall be provided with a factory-installed positive pressure lubrication system to deliver oil under pressure to bearings and rotors at all operating conditions. Lubrication system shall include:
   a. Oil pump with factory-installed motor contactor with overload protection.
   b. Oil pressure sensor with differential readout at main control center.
   c. Oil pressure regulator.
   d. Oil filter with isolation valves to allow filter change without removal of refrigerant charge.
   e. Oil sump heater [115 v, 50 or 60 Hz] controlled from unit microprocessor.
   f. Oil reservoir temperature sensor with main control center digital readout.
   g. All wiring to oil pump, oil heater, and controls shall be pre-wired in the factory and power shall be applied to check proper operation prior to shipment.
7. Compressor shall be fully field serviceable. Compressors that must be removed and returned to the factory for service shall be unacceptable.
8. Acoustical attenuation shall be provided as required, to achieve a maximum (full load) sound level, measured per AHRI Standard 575 (latest edition).

C. Motor:

1. Compressor motor shall be of the semi-hermetic, liquid refrigerant cooled, squirrel cage, induction type suitable for voltage shown on the equipment schedule.
2. If an open (air-cooled) motor is provided, a compressor shaft seal leakage containment system shall be provided:
   a. An oil reservoir shall collect oil and refrigerant that leaks past the seal.
   b. A float device shall be provided to open when the reservoir is full, directing the refrigerant/oil mixture back into the compressor housing.
   c. A refrigerant sensor shall be located next to the open drive seal to detect leaks.
3. Motors shall be suitable for operation in a refrigerant atmosphere and shall be cooled by atomized refrigerant in contact with the motor windings.
4. Motor stator shall be arranged for service or removal with only minor compressor disassembly and without removing main refrigerant piping connections.
5. Full load operation of the motor shall not exceed nameplate rating.
6. One motor winding temperature sensor (and one spare) shall be provided.
7. Should mechanical contractor choose to provide a chiller with an air-cooled motor instead of

the specified semi-hermetic motor, the contractor shall install additional cooling equipment to dissipate the motor heat.

The following formula applies:

Btuh = (FLkW motor) (0.05) (3413)

Btuh = (FLkW motor) (171)

CFM = Btuh/1.08 x 20 F (additional air flow)

and, alternately

Tons = Btuh/12,000

The additional piping, valves, air-handling equipment, insulation, wiring, switchgear changes, ductwork, and coordination with other trades shall be the responsibility of the mechanical contractor. Shop drawings reflecting any changes to the design shall be included in the submittal, and incorporated into the final as-built drawings for the project.

8. Also, if an open motor is provided, a mechanical room thermostat shall be provided and set at 104 F (40 C). If this temperature is exceeded, the chillers shall shut down and an alarm signal shall be generated to the central Energy Management System (EMS) display module, prompting the service personnel to diagnose and repair the cause of the overtemperature condition. The mechanical contractor shall be responsible for all changes to the design, including coordination with temperature control, electrical and other trades. In addition, the electrical power consumption of any auxiliary ventilation and/or mechanical cooling required to maintain the mechanical room conditions stated above shall be considered in the determination of conformance to the scheduled chiller energy efficiency requirement.

D. Evaporator and Condenser:

1. Evaporator and condenser shall be of shell and tube type construction, each in separate shells. Units shall be fabricated with high-performance tubing, steel shell and tube sheets with waterboxes. Waterboxes shall be nozzle-in-head type with stub out nozzles having Victaulic grooves to allow for use of Victaulic couplings.
2. Tubing shall be copper, high-efficiency type, with integral internal and external enhancement unless otherwise noted. Tubes shall be nominal $^3/_4$-in. OD with nominal wall thickness of 0.025 in. measured at the root of the fin unless otherwise noted. Tubes shall be rolled into tube sheets and shall be individually replaceable. Tube sheet holes shall be double grooved for joint structural integrity. Intermediate support sheet spacing shall not exceed 36 in. (914 mm).
3. Waterboxes and nozzle connections shall be designed for 150 psig (1034 kPa) minimum working pressure unless otherwise noted. Nozzles should have grooves to allow use of Victaulic couplings.
4. The tube sheets of the cooler and condenser shall be bolted together to allow for field disassembly and reassembly.
5. The vessel shall display an ASME nameplate that shows the pressure and temperature data and the "U" stamp for ASME Section VIII, Division 1. A re-seating pressure relief valve(s) shall be installed on each heat exchanger. If a non-reseating type is used, a backup reseating type shall be installed in series.
6. Waterboxes shall have vents, drains, and covers to permit tube cleaning within the space shown on the drawings. A thermistor type temperature sensor with quick connects shall be factory-installed in each water nozzle.
7. Cooler shall be designed to prevent liquid refrigerant from entering the compressor. Devices that introduce pressure losses (such as mist eliminators) shall not be acceptable because they are subject to structural failures that can result in extensive compressor damage.
8. Tubes shall be individually replaceable from either end of the heat exchanger without affecting the strength and durability of the tube sheet and without causing leakage in adjacent tubes.
9. The subcooler, located in the bottom of the condenser, shall increase the refrigeration effect by cooling the condensed liquid refrigerant to a lower temperature, thereby reducing compressor power consumption.

E. Refrigerant Flow Control:

The variable flow control system regulates refrigerant flow according to load conditions, providing a liquid seal at all operating conditions, eliminating unintentional hot gas bypass.

F. Controls, Safeties, and Diagnostics:

1. Controls:
   a. The chiller shall be provided with a factory-installed and factory-wired microprocessor control center. The control center shall include a 16-line by 40-character liquid crystal display, 4 function keys, stop button, and alarm light. Other languages are available using the international language translator software.
   b. All chiller and motor control monitoring shall be displayed at the chiller control panel.
   c. The controls shall make use of non-volatile memory.
   d. The chiller control system shall have the ability to interface and communicate directly to the building control system.

e. The default standard display screen shall simultaneously indicate the following minimum information:

1) Date and time of day
2) 24-character primary system status message
3) 24-character secondary status message
4) Chiller operating hours
5) Entering chilled water temperature
6) Leaving chilled water temperature
7) Evaporator refrigerant temperature
8) Entering condenser water temperature
9) Leaving condenser water temperature
10) Condenser refrigerant temperature
11) Oil supply pressure
12) Oil sump temperature
13) Percent motor rated load amps (RLA)

f. In addition to the default screen, status screens shall be accessible to view the status of every point monitored by the control center including:

1) Evaporator pressure
2) Condenser pressure
3) Compressor speed
4) Bearing oil supply temperature
5) Compressor discharge temperature
6) Motor winding temperature
7) Number of compressor starts
8) Control point settings
9) Discrete output status of various devices
10) Variable frequency drive status
11) Optional spare input channels
12) Line current and voltage for each phase
13) Frequency, kW, kWhr, demand kW

g. Schedule Function:

The chiller controls shall be configurable for manual or automatic start-up and shutdown. In automatic operation mode, the controls shall be capable of automatically starting and stopping the chiller according to a stored user programmable occupancy schedule. The controls shall include built-in provisions for accepting:

1) A minimum of two 365-day occupancy schedules.
2) Minimum of 8 separate occupied/unoccupied periods per day
3) Daylight savings start/end
4) 18 user-defined holidays
5) Means of configuring an occupancy timed override
6) Chiller start-up and shutdown via remote contact closure

h. Service Function:

The controls shall provide a password protected service function which allows authorized individuals to view an alarm history file which shall contain the last 25 alarm/alert messages with time and date stamp. These messages shall be displayed in text form, not codes.

i. Network Window Function:

Each chiller control panel shall be capable of viewing multiple point values and statuses from other like controls connected on a common network, including controller maintenance data. The operator shall be able to alter the remote controller's set points or time schedule and to force point values or statuses for those points that are operator forcible. The control panel shall also have access to the alarm history file of all like controllers connected on the network.

j. Pump Control:

Upon request to start the compressor, the control system shall start the chilled and condenser water pumps and shall verify that flows have been established.

k. Ramp Loading:

A user-configurable ramp loading rate, effective during the chilled water temperature pulldown period, shall prevent a rapid increase in compressor power consumption. The controls shall allow configuration of the ramp loading rate in either degrees per minute of chilled water temperature pulldown or percent motor amps per minute. During the ramp loading period, a message shall be displayed informing the operator that the chiller is operating in ramp loading mode.

l. Chilled Water Reset:

The control center shall allow reset of the chilled water temperature set point based on any one of the following criteria:

1) Chilled water reset based on an external 4 to 20 mA signal.
2) Chilled water reset based on a remote temperature sensor (such as outdoor air).
3) Chilled water reset based on water temperature rise across the evaporator.

m. Demand Limit:

The control center shall limit amp draw of the compressor to the rated load amps or to a lower value based on one of the following criteria:

1) Demand limit based on a user input ranging from 40% to 100% of compressor rated load amps
2) Demand limit based on external 4 to 20 mA signal.

n. Controlled Compressor Shutdown:

The controls shall be capable of being configured to soft stop the compressor. The display shall indicate "shutdown in progress."

2. Safeties:
   a. Unit shall automatically shut down when any of the following conditions occur (each of these protective limits shall require manual reset and cause an alarm message to be displayed on the control panel screen, informing the operator of the shutdown cause):
      1) Motor overcurrent
      2) Over voltage*
      3) Under voltage*
      4) Single cycle dropout* (LF-2 VFDs only)
      5) Low oil sump temperature
      6) Low evaporator refrigerant temperature
      7) High condenser pressure
      8) High motor temperature
      9) High compressor discharge temperature
      10) Low oil pressure
      11) Prolonged stall
      12) Loss of cooler water flow
      13) Loss of condenser water flow
      14) Variable frequency drive fault
      15) High variable frequency drive temperature

      * Shall not require manual reset or cause an alarm if auto-restart after power failure is enabled.
   b. The control system shall detect conditions that approach protective limits and take self-corrective action prior to an alarm occurring. The system shall automatically reduce chiller capacity when any of the following parameters are outside their normal operating range:
      1) High condenser pressure
      2) High motor temperature
      3) Low evaporator refrigerant temperature
      4) High motor amps
      5) High VFD inverter temperature
   c. During the capacity override period, a pre-alarm (alert) message shall be displayed informing the operator which condition is causing the capacity override. Once the condition is again within acceptable limits, the override condition shall be terminated and the chiller shall revert to normal chilled water control. If during either condition the protective limit is reached, the chiller shall shut down and a message shall be displayed informing the operator which condition caused the shutdown and alarm.
   d. Internal built-in safeties shall protect the chiller from loss of water flow. Differential pressure switches shall not be allowed to be the only form of freeze protection.
3. Diagnostics and Service:
   a. A self diagnostic controls test shall be an integral part of the control system to allow quick identification of malfunctioning components.
   b. Once the controls test has been initiated, all pressure and temperature sensors shall be checked to ensure they are within normal operating range. A pump test shall automatically energize the chilled water pump, condenser water pump, and oil pump. The control system shall confirm that water flow and oil pressure have been established and require operator confirmation before proceeding to the next test.
   c. In addition to the automated controls test, the controls shall provide a manual test which permits selection and testing of individual control components and inputs. A thermistor test and transducer test shall display on the ICVC screen the actual reading of each transducer and each thermistor installed on the chiller. All out-of-range sensors shall be identified. Pressure transducers shall be serviceable without the need for refrigerant charge removal or isolation.
4. Multiple Chiller Control:

   The chiller controls shall be supplied as standard with a two-chiller lead/lag and a third chiller standby system. The control system shall automatically start and stop a lag or second chiller on a two-chiller system. If one of the two chillers on line goes into a fault mode, the third standby chiller shall be automatically started. The two-chiller lead/lag system shall allow manual rotation of the lead chiller and a staggered restart of the chillers after a power failure. The lead/lag system shall include load balancing if configured to do so.

G. Electrical Requirements:
   1. Electrical contractor shall supply and install main electrical power line, disconnect switches, circuit breakers, and electrical protection devices per local code requirements and as indicated necessary by the chiller manufacturer.
   2. Electrical contractor shall wire the chilled water pump and flow, condenser water pump and flow, and tower fan control circuit to the chiller control circuit.
   3. Electrical contractor shall supply and install electrical wiring and devices required to interface the chiller controls with the building control system if applicable.
   4. Electrical power shall be supplied to the unit at the voltage, phase, and frequency listed in the equipment schedule.

H. Piping Requirements — Instrumentation and Safeties:
   1. Mechanical contractor shall supply and install pressure gages in readily accessible locations in piping adjacent to the chiller such that they can be easily read from a standing position on the floor. Scale range shall be such that design values shall be indicated at approximately mid-scale.

2. Gages shall be installed in the entering and leaving water lines of the cooler and condenser.

I. Vibration Isolation:

Chiller manufacturer shall furnish neoprene isolator pads for mounting equipment on a level concrete surface.

J. Start-Up:

1. The chiller manufacturer shall provide a factory-trained representative, employed by the chiller manufacturer, to perform the start-up procedures as outlined in the Start-Up, Operation and Maintenance manual provided by the chiller manufacturer.
2. Manufacturer shall supply the following literature:
   a. Start-up, operation and maintenance instructions.
   b. Installation instructions.
   c. Field wiring diagrams.
   d. One complete set of certified drawings.

K. Special Features:

1. Soleplate Package:

   Unit manufacturer shall furnish a soleplate package consisting of soleplates, jacking screws, leveling pads, and neoprene pads.
2. Spring Isolators:

   Spring isolators shall be field furnished and selected for the desired degree of isolation.
3. Spare Sensors with Leads:

   Unit manufacturer shall furnish additional temperature sensors and leads.
4. Stand-Alone Pumpout Unit:

   A free-standing pumpout unit shall be provided. The pumpout unit shall use a semi-hermetic reciprocating compressor with liquid-cooled condenser. Condenser liquid piping and 3-phase motor power shall be installed at the jobsite by the installing contractor.
5. Separate Storage Tank and Pumpout Unit:

   A free-standing refrigerant storage tank and pumpout unit shall be provided. The storage vessels shall be designed per ASME Section VIII Division 1 code with 150 psig (1034 kPa) design pressure. Double relief valves per ANSI/ASHRAE 15, latest edition, shall be provided. The tank shall include a liquid level gage and pressure gage. The pumpout shall use a hermetic reciprocating compressor with water-cooled condenser. Condenser water piping and 3-phase motor power shall be installed at the jobsite by the installing contractor.
6. BACnet* Communication Option:

   Shall provide factory-installed communication capability with a BACnet MS/TP network. Allows integration with i-Vu® Open control system or a BACnet building automation system.
7. Building Control System Interface (LON):

   The chiller control system shall have the ability to interface and communicate directly to the building control using a LON based system. The LonWorks† Carrier Translator shall output data in standard LON profiles.
8. Refrigerant Charge:

   The chiller shall ship from the factory fully charged with R-134a refrigerant and oil.
9. Thermal Insulation:

   Unit manufacturer shall insulate the cooler shell, economizer, suction elbow, motor shell and motor cooling lines. Insulation shall be 1 in. (25.4 mm) thick with a thermal conductivity not exceeding

   $$0.28 \frac{(\text{Btu} \cdot \text{in.})}{\text{hr. Ft}^2\ \text{F}} \left(0.0404 \frac{\text{W}}{\text{m C}} \right)$$

   and shall conform to UL standard 94, classification 94 HF-1.
10. Automatic Hot Gas Bypass:

    Hot gas bypass valve and piping shall be factory-furnished to permit chiller operation for extended periods of time.
11. Cooler and Condenser Tubes:

    Contact your local Carrier Representative for other tube offerings.
12. Cooler and Condenser Passes:

    Unit manufacturer shall provide the cooler and/or condenser with 1, 2 or 3 pass configuration on the water side.
13. Nozzle-In-Head, 300 psig (2068 kPa):

    Unit manufacturer shall furnish nozzle-in-head style waterboxes on the cooler and/or condenser rated at 300 psig (2068 kPa).
14. Marine Waterboxes, 150 psig (1034 kPa):

    Unit manufacturer shall furnish marine style waterboxes on cooler and/or condenser rated at 150 psig (1034 kPa).
15. Marine Waterboxes, 300 psig (2068 kPa):

    Unit manufacturer shall furnish marine style waterboxes on cooler and/or condenser rated at 300 psig (2068 kPa).
16. Flanged Water Nozzles:

    Unit manufacturer shall furnish standard flanged piping connections on the cooler and/or condenser.
17. Hinges:

    Unit manufacturer shall furnish hinges on waterboxes to facilitate tube cleaning.

*BACnet is a registered trademark of ASHRAE (American Society of Heating, Refrigerating, and Air-Conditioning Engineers).
†LonWorks is a registered trademark of Echelon Corporation.

18. Optional Compressor Discharge Isolation Valve and Liquid Line Ball Valve:

    These items shall be factory-installed to allow isolation of the refrigerant charge in the condenser for servicing the compressor.

19. Pumpout Unit:

    A refrigerant pumpout system shall be installed on the chiller. Pumpout system shall include a hermetic compressor and drive, internal piping, internal wiring, and motor. Field-supplied main power wiring and water piping shall be required. (Q and R compressor only)

20. Optional Seismic Isolation Package:

    Package shall meet International Building Code and ASCE 7 seismic qualification requirements in concurrence with ICC ES AC156 Acceptance Criteria for Seismic Qualification by Shake-Table Testing of Nonstructural Components and Systems. Manufacturer shall provide seismic certificate from OSHPD (California only).

21. Unit-Mounted Variable Frequency Drive (VFD) with Built-In Harmonic LiquiFlo™ II Filter (Q and R compressor only):

    a. Design:
        1) The VFD shall be refrigerant cooled, microprocessor based, pulse width modulated design. Water-cooled designs are not acceptable.
        2) Input and output power devices shall be Insulated Gate Bipolar Transistors (IGBTs).
        3) Rectifier shall convert incoming fixed voltage/frequency to fixed DC voltage.
        4) Transistorized inverter and control regulator shall convert fixed DC voltage to a sinusoidal PWM waveform.
        5) Low voltage control sections and main power sections shall be physically isolated.
        6) Integrated controls shall coordinate motor speed to optimize chiller performance over a wide variety of operating conditions.

    b. Enclosure:
        1) Pre-painted unit mounted, NEMA (National Electrical Manufacturers Association) 1 cabinet shall include hinged, lockable doors and removable lifting lugs.
        2) The VFD shall have a short circuit current rating of at least 65,000 amps.
        3) Provisions to padlock main disconnect handle in "Off" positions shall be provided. Mechanical interlock to prevent opening cabinet door with disconnect in the "On" position or moving disconnect to the "On" position while the door is open shall be provided.
        4) Provisions shall be made for top entry of incoming line power cables.

    c. Heat Sink:
        1) The heat sink (frame sizes 3, 4, 5 heat exchangers only) shall be refrigerant cooled. Heat sink and mating flanges shall be suitable for ASME design working pressure of 185 psig (1276 kPa).
        2) Refrigerant cooling shall be metered to maintain heat sink temperature within acceptable limits for ambient temperature.

    d. VFD Rating:
        1) Drive shall be suitable for operation at nameplate voltage ±10%.
        2) Drive shall be suitable for continuous operation at 100% of nameplate amps and 150% of nameplate amps for 5 seconds.
        3) Drive shall comply with applicable ANSI, NEMA, UL (Underwriters Laboratories) and NEC (National Electrical Code) standards.
        4) Drive shall be suitable for operation in ambient temperatures between 40 and 122 F (4 and 50 C), 95% humidity (non-condensing) for altitudes up to 6000 ft (1829 m) above sea level. Specific drive performance at jobsite ambient temperature and elevation shall be provided by the manufacturer in the bid.

    e. User Interface:

    A single display shall provide interface for programming and display of VFD and chiller parameters. Viewable parameters include:
        1) Operating, configuration, and fault messages
        2) Frequency in hertz
        3) Load and line side voltage and current (at the VFD)
        4) kW
        5) IGBT temperature

    f. VFD Performance:
        1) The VFD Voltage Total Harmonic Distortion (THD) and Harmonic Current Total Demand Distortion (TDD) shall not exceed IEEE-519 requirements using the VFD circuit breaker input terminals as the point of common coupling (PCC).
        2) The VFD full load efficiency shall meet or exceed 97% at 100% VFD rated ampacity.
        3) Active rectifier shall regulate unity displacement power factor to 0.99 or higher.
        4) Voltage boost capability to provide full motor voltage at reduced line voltage conditions.

5) The VFD shall feature soft start, linear acceleration, and coast to stop capabilities.
6) Base motor frequency shall permit motor to be utilized at nameplate voltage. Adjustable frequency range shall permit capacity control down to 15%.
7) The VFD shall have 150% instantaneous torque generation.

g. VFD Electrical Service (single point power):
1) The VFD shall have input circuit breaker with minimum 65,000 amp interrupt capacity.
2) The VFD shall have standard branch oil pump circuit breaker to provide power for chiller oil pump.
3) The VFD shall have standard 3 KVA control power transformer with circuit breaker to provide power for oil heater, VFD controls and chiller controls.
4) The branch oil pump circuit breaker and control power transformer shall be factory-wired.
5) Input power shall be 380/460 vac, ±10%, 3 Phase, 50/60 Hz, ±2% Hz.

h. Discrete Outputs:

115-v discrete contact outputs shall be provided for:
1) Circuit breaker shunt trip
2) Chilled water pump
3) Condenser water pump
4) Alarm status

i. Analog Output:

An analog (4 to 20 mA) output for head pressure reference shall be provided. This signal shall be suitable to control a 2-way or 3-way water regulating valve in the condenser piping.

j. Protection (the following shall be supplied):
1) Under-voltage
2) Over voltage
3) Phase loss
4) Phase reversal
5) Ground fault
6) Phase unbalance protection
7) Single cycle voltage loss protection (LF-2 VFD only)
8) Programmable auto re-start after loss of power
9) Motor overload protection (NEMA Class 10)
10) Motor over temperature protection

k. VFD Testing:

The VFD shall be factory-mounted, factory-wired and factory-tested on the chiller prior to shipment.

22. Unit-Mounted Variable Frequency Drive (VFD) without Built-In Harmonic Filter:

a. Design:
1) VFD shall be air or refrigerant cooled, microprocessor based, pulse width modulated design. Water-cooled designs are not acceptable.
2) Output power devices shall be insulated gate bipolar transistors (IGBTs).
3) Converter section with full-wave fixed diode bridge rectifier shall convert incoming fixed voltage/frequency to fixed DC voltage.
4) DC link shall filter and smooth the converted DC voltage.
5) Transistorized inverter and control regulator shall convert fixed DC voltage to a sinusoidal PWM waveform.
6) Integrated controls shall coordinate the motor speed to optimize chiller performance over a wide variety of operating conditions.

b. Enclosure:
1) Pre-painted unit mounted, NEMA 1 cabinet shall include hinged, lockable doors and removable lifting lugs.
2) VFD shall have a short circuit current rating of at least 65,000 amps (100,000 amps is optional).
3) Provisions to padlock main disconnect handle in the "Off" positions shall be provided. Mechanical interlock to prevent opening cabinet door with disconnect in the "On" position or moving disconnect to the "ON" position while the door is open shall be provided.
4) Provisions shall be made for top entry of incoming line power cables.

c. Heat Sink:
1) The heat sink (frame sizes 3, 4, 5 heat exchangers only) shall be refrigerant cooled. Heat sink and mating flanges shall be suitable for ASME design working pressure of 185 psig (1276 kPa).
2) Refrigerant cooling shall be metered by integrated standard controls to maintain heat sink temperature within acceptable limits for ambient temperature.

d. VFD Rating:
1) Drive shall be suitable for nameplate voltage ±10%.
2) Drive shall be suitable for continuous operation at 100% of nameplate amps and 150% of nameplate amps for 3 seconds.
3) Drive shall comply with applicable UL, CE, and NEMA standards.
4) Drive shall be suitable for operation in ambient temperatures between 40 and

104 F (4.4 and 40 C), 95% humidity (non-condensing) for altitudes up to 3300 feet (1006 m) above sea level. Specific drive performance at jobsite ambient temperature and elevation shall be provided by the manufacturer in the bid.

e. User Interface:

Displays shall provide interface for programming and display of VFD and chiller parameters. Viewable parameters include:

1) Operating, configuration and fault messages
2) Frequency in hertz
3) Load side voltage and current (at the VFD)
4) kW (on the VFD interface)

f. VFD Performance:

1) VFD full load efficiency shall meet or exceed 97% at 100% VFD Rated Ampacity.
2) Base motor frequency shall be either 50 or 60 hertz.

g. VFD Electrical Service: (single point power):

1) VFD shall have input circuit breaker with minimum 65,000 amp interrupt capacity.
2) VFD shall have standard 15 amp branch oil pump circuit breaker to provide power for chiller oil pump.
3) VFD shall have standard 3 kva control power transformer with circuit breaker provides power for oil heater, VFD controls and chiller controls.
4) The branch oil pump circuit breaker and control power transformer shall be factory wired.
5) Input power shall be 380/480 vac, ±10 percent, 3 phase, 50/60 Hz, ±3 Hz.

h. Discrete Outputs:

115-v discrete contact outputs shall be provided for:

1) Chilled water pump
2) Condenser water pump
3) Alarm status.

i. Analog Output:

An analog (4 to 20 mA) output for head pressure reference shall be provided. This signal shall be suitable to control a 2-way or 3-way water regulating valve in the condenser piping.

j. Protection (the following shall be supplied):

1) Under-voltage
2) Over voltage
3) Phase loss
4) Phase unbalance protection
5) Programmable auto re-start after loss of power
6) Motor overload protection (NEMA Class 10)
7) Motor over temperature protection

k. VFD Testing:

The VFD shall be factory mounted, wired, and tested on the chiller prior to shipment.

23. Unit-Mounted Variable Frequency Drive (575-v VFD) without Built-In Harmonic Filter (Q and R compressor only):

a. Design:

1) VFD shall be air or refrigerant cooled, microprocessor based, pulse width modulated design. Water-cooled designs are not acceptable.
2) Output power devices shall be insulated gate bipolar transistors (IGBTs).
3) Converter section with full-wave fixed-diode bridge rectifier shall convert incoming fixed voltage/frequency to fixed DC voltage.
4) DC link shall filter and smooth the converted DC voltage.
5) Transistorized inverter and control regulator shall convert fixed DC voltage to a sinusoidal PWM waveform.
6) Integrated controls shall coordinate the motor speed to optimize chiller performance over a wide variety of operating conditions.

b. Enclosure:

1) Pre-painted unit mounted, NEMA 1 cabinet shall include hinged, lockable doors and removable lifting lugs.
2) VFD shall have an Amp Interrupt Capacity (AIC) of 35,000 amps and a short circuit current rating of 25,000 amps.
3) Provisions to padlock main disconnect handle in the "Off" positions shall be provided. Mechanical interlock to prevent opening cabinet door with disconnect in the "On" position or moving disconnect to the "On" position while the door is open shall be provided.
4) Provisions shall be made for top entry of incoming line power cables.

c. Heat Sink:

1) The heat sink shall be refrigerant cooled. Heat sink and mating flanges shall be suitable for ASME design working pressure of 185 psig (1276 kPa).
2) Refrigerant cooling shall be metered by integrated standard controls to maintain heat sink temperature within acceptable limits for ambient temperature.

d. VFD Rating:

1) Drive shall be suitable for nameplate voltage ±10%.
2) Drive shall be suitable for continuous operation at 100% of nameplate amps and 150% of nameplate amps for 3 seconds.
3) Drive shall comply with applicable UL and NEMA standards.
4) Drive shall be suitable for operation in ambient temperatures between 40 and 104 F (4.4 and 40 C), 95% humidity (non-condensing) for altitudes up to 3300 feet (1006 m) above sea level. Specific drive performance at jobsite ambient temperature and elevation shall be provided by the manufacturer in the bid.

e. User Interface:

Displays shall provide interface for programming and display of VFD and chiller parameters. Viewable parameters include:

1) Operating, configuration and fault messages
2) Frequency in hertz
3) Load side voltage and current (at the VFD)
4) kW (on the VFD interface)

f. VFD Performance:

1) VFD full load efficiency shall meet or exceed 97% at 100% VFD Rated Ampacity.
2) Base motor frequency shall be 60 hertz.

g. VFD Electrical Service: (single point power):

1) VFD shall have input circuit breaker with minimum 35,000 amp interrupt capacity.
2) VFD shall have standard 15 amp branch oil pump circuit breaker to provide power for chiller oil pump.
3) VFD shall have standard 3 kva control power transformer with circuit breaker provides power for oil heater, VFD controls and chiller controls.
4) The branch oil pump circuit breaker and control power transformer shall be factory wired.
5) Input power shall be 575 vac, ±10 percent, 3 phase, 60 Hz, ±3 Hz.

h. Discrete Outputs:

115-v discrete contact outputs shall be provided for:

1) Chilled water pump
2) Condenser water pump
3) Alarm status.

i. Analog Output:

An analog (4 to 20 mA) output for head pressure reference shall be provided. This signal shall be suitable to control a 2-way or 3-way water regulating valve in the condenser piping.

j. Protection (the following shall be supplied):

1) Under-voltage
2) Over voltage
3) Phase loss
4) Phase unbalance protection
5) Programmable auto re-start after loss of power
6) Motor overload protection (NEMA Class 10)
7) Motor over temperature protection

k. VFD Testing:

The VFD shall be factory mounted, wired, and tested on the chiller prior to shipment.