Installation and Maintenance Instructions

CONTENTS

Page
SAFETY CONSIDERATIONS 1,2
GENERAL 2,3
INSTALLATION 4-8
Step 1 — Unpack and Inspect Units 4
- PROTECTING UNITS FROM DAMAGE
- PREPARING JOBSITE FOR UNIT INSTALLATION
- IDENTIFYING AND PREPARING UNITS

Step 2 — Position the Unit 4
Step 3 — Install Ductwork 5
- UPFLOW INSTALLATION
- HORIZONTAL INSTALLATIONS
- DUCT CONNECTIONS
- DUCTWORK ACOUSTICAL TREATMENT

Step 4 — Connect Piping 5
- CONDENSATE PIPING
- REFRIGERANT PIPING

Step 5 — Complete Electrical Connections 6
Step 6 — Position and Connect Controller 7
- REMOTE WIRED CONTROLLER (PROGRAMMABLE)
- REMOTE WIRED CONTROLLER (NON-PROGRAMMABLE)
- CENTRAL CONTROLLER

START-UP 8
Pre-Start Check 8
System Operation Check 8
MAINTENANCE 8
TROUBLESHOOTING 9,10
Replacement Parts 10

SAFETY CONSIDERATIONS

Improper installation, adjustment, alteration, service, maintenance, or use can cause explosion, fire, electrical shock, or other conditions which may cause death, personal injury or property damage. The qualified installer or agency must use factory-authorized kits or accessories when modifying this product.

Follow all safety codes. Wear safety glasses, protective clothing, and work gloves. Use quenching cloth for brazing operations. Have fire extinguisher available. Read these instructions thoroughly and follow all warnings or cautions included in literature and attached to the unit. Consult local building codes and the current editions of the National Electrical Code (NEC) ANSI/NFPA (American National Standards Institute/ National Fire Protection Association) 70. In Canada, refer to the current editions of the Canadian Electrical Code CSA (Canadian Standards Association) C22.1.

Understand the signal words — DANGER, WARNING, and CAUTION. DANGER identifies the most serious hazards which will result in severe personal injury or death. WARNING signifies hazards that could result in personal injury or death. CAUTION is used to identify unsafe practices, which would result in minor personal injury or product and property damage.

Recognize safety information. This is the safety-alert symbol (⚠). When this symbol is displayed on the unit and in instructions or manuals, be alert to the potential for personal injury. Installing, starting up, and servicing equipment can be hazardous due to system pressure, electrical components, and equipment location.

⚠ WARNING

Electrical shock can cause personal injury and death. Shut off all power to this equipment during installation. There may be more than one disconnect switch. Tag all disconnect locations to alert others not to restore power until work is completed.

⚠ WARNING

When installing the equipment in a small space, provide adequate measures to avoid refrigerant concentration exceeding safety limits due to refrigerant leak. In case of refrigerant leak during installation, ventilate the space immediately. Failure to follow this procedure may lead to personal injury.

⚠ WARNING

DO NOT USE TORCH to remove any component. System contains oil and refrigerant under pressure.

To remove a component, wear protective gloves and goggles and proceed as follows:

a. Shut off electrical power to unit.
b. Recover refrigerant to relieve all pressure from system using both high-pressure and low pressure ports.
c. Traces of vapor should be displaced with nitrogen and the work area should be well ventilated. Refrigerant in contact with an open flame produces toxic gases.
d. Cut component connection tubing with tubing cutter and remove component from unit. Use a pan to catch any oil that may come out of the lines and as a gage for how much oil to add to the system.
e. Carefully unsweat remaining tubing stubs when necessary. Oil can ignite when exposed to torch flame.

Failure to follow these procedures may result in personal injury or death.

Manufacturer reserves the right to discontinue, or change at any time, specifications or designs without notice and without incurring obligations.

⚠ CAUTION

DO NOT re-use compressor oil or any oil that has been exposed to the atmosphere. Dispose of oil per local codes and regulations. DO NOT leave refrigerant system open to air any longer than the actual time required to service the equipment. Seal circuits being serviced and charge with dry nitrogen to prevent oil contamination when timely repairs cannot be completed. Failure to follow these procedures may result in damage to equipment. For information about replacement oil type and viscosity, see the Mini VRF Outdoor Unit installation instructions.

GENERAL

The 40WAV vertical AHU (air handling unit) is equipped with a DC motor which provides excellent efficiency. The unit features dual drain spouts so it can be mounted vertically or horizontally, and is ideal for closet applications. Through thermostatic control of operations, conditions can be varied to suit diverse requirements and activities.

The equipment is initially protected under the manufacturer's standard warranty; however, the warranty is provided under the condition that the steps outlined in this manual for initial inspection, proper installation, regular periodic maintenance, and everyday operation of the unit be followed in detail. This manual should be fully reviewed in advance before initial installation, start-up and any maintenance. Contact your local sales representative or the factory with any questions BEFORE proceeding.

Table 1 lists physical data for each unit size. See Fig. 1 for model number nomenclature. Figure 2 shows unit dimensions.

Table 1 — 40WAV Physical Data

UNIT 40WAV	018	024	030	036	048
POWER SUPPLY (V-Ph-Hz)	208/230-1-60				
COOLING CAPACITY (Btuh)	18,000	24,000	30,000	36,000	48,000
HEATING CAPACITY (Btuh)	21,000	27,000	34,000	40,000	54,000
INDOOR FAN MOTOR					
Type	DC Motor				
Input (W)	220	290	390	350	590
Insulation Class	E				
INDOOR COIL					
Number of Rows	4 x 2				
Fin Spacing (fins/in.)	16				
Fin Type	Hydrophylic Aluminum				
Tube Diameter, OD (in.)	$^{9}/_{32}$				
Tube Type	Inner Groove Tube				
Number of Circuits	8			12	
INDOOR AIRFLOW (cfm)					
Low	460	600	750	900	1120
Medium	550	730	870	1050	1360
High	650	800	1000	1200	1650
EXTERNAL STATIC PRESSURE, HIGH (in. wg)	0.6		0.8		
INDOOR NOISE LEVEL (dBA)					
Low	43	43	47	52	55
Medium	45	47	49	54	57
High	48	49	52	57	58
SUPPLY DUCT DIMENSIONS, W x D (in.)	18 x 10 $^{5}/_{16}$			19 $^{1}/_{2}$ x 10 $^{5}/_{16}$	
DIMENSIONS					
Unit Dimensions, W x H x D (in.)	19 $^{5}/_{8}$ x 46 $^{1}/_{2}$ x 20 $^{5}/_{8}$			22 x 54 $^{1}/_{2}$ x 24	
Packing Dimensions, W x H x D (in.)	22 $^{3}/_{8}$ x 50 $^{1}/_{4}$ x 25 $^{3}/_{8}$			24 $^{5}/_{8}$ x 58 $^{1}/_{4}$ x 27 $^{3}/_{4}$	
Net/Gross Weight (lb)	123/147			163/190	
REFRIGERANT TYPE	R-410A				
THROTTLE	EXV				
DESIGN PRESSURE (psig)	650				
REFRIGERANT PIPING (in.)					
Liquid Side, OD	$^{1}/_{4}$	$^{3}/_{8}$			
Gas Side, OD	$^{1}/_{2}$	$^{5}/_{8}$			
CONNECTING WIRING (AWG)					
Power Wiring	3 x 14				
Signal Wiring	3 x 20				
DRAINAGE WATER PIPE DIAMETER, OD (in.)	$^{3}/_{4}$				

LEGEND

AWG — American Wire Gage

EXV — Electronic Expansion Valve

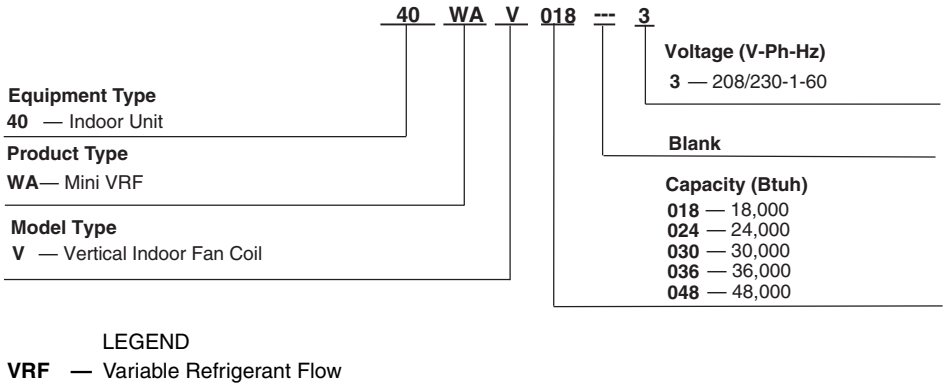

Fig. 1 — Model Number Nomenclature

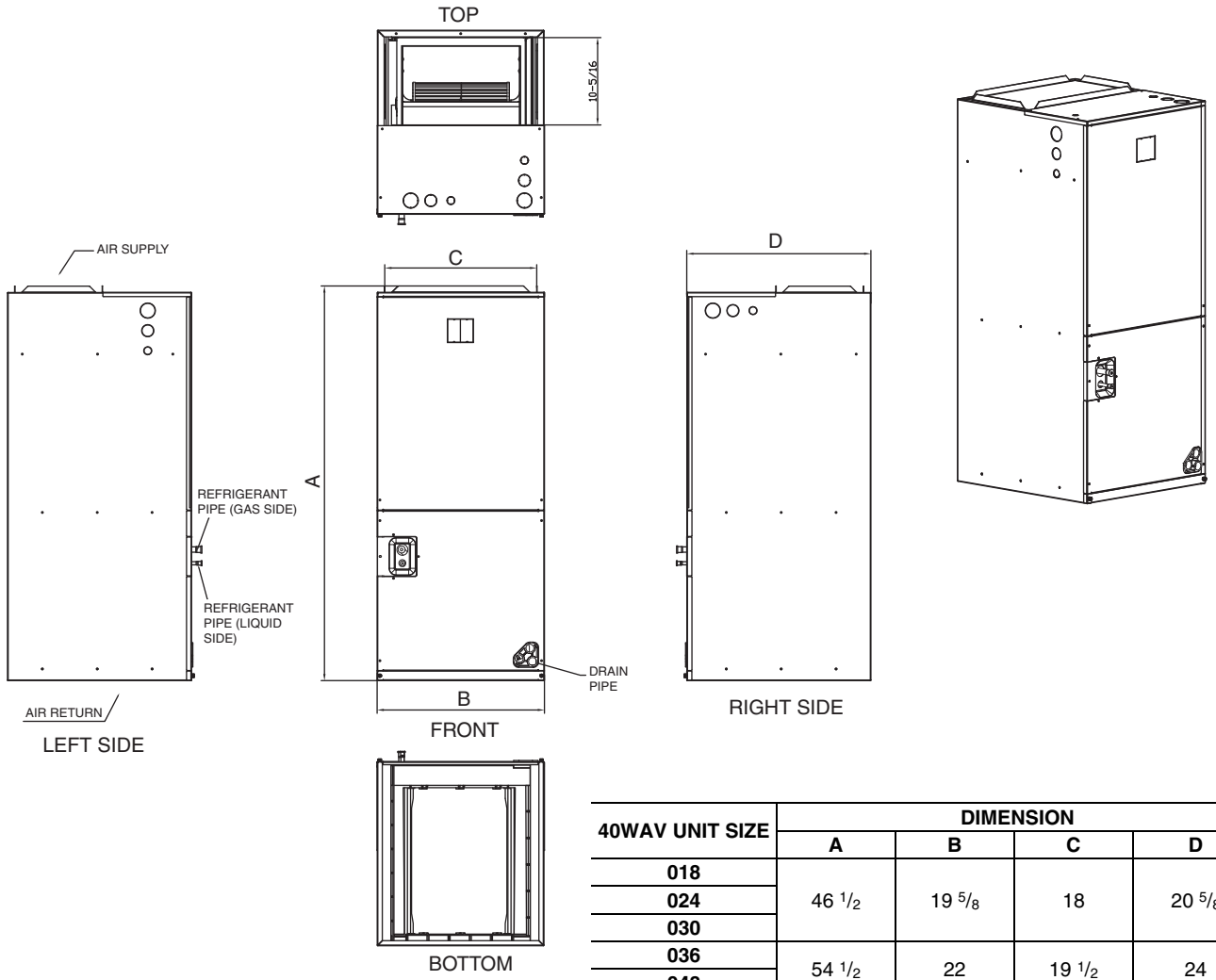

40WAV UNIT SIZE	DIMENSION			
	A	B	C	D
018	46 1/2	19 5/8	18	20 5/8
024				
030				
036	54 1/2	22	19 1/2	24
048				

NOTE: All dimensions shown in inches.

Fig. 2 — 40WAV018-048 Dimensions

INSTALLATION

Step 1 — Unpack and Inspect Units — Units are packaged for shipment to avoid damage during normal transit and handling. It is the receiving party's responsibility to inspect the equipment upon arrival. Any obvious damage to the carton and/or its contents should be reported on the bill of lading and a claim should be filed with the transportation company and the factory. Unit should always be stored in a dry place, and in the proper orientation as marked on the carton.

⚠ CAUTION

To avoid equipment damage, do not lift unit by the drain pipe or refrigerant piping. Unit should be lifted using the mounting brackets.

After determining the condition of the carton exterior, carefully remove each unit from the carton and inspect for hidden damage. Check to make sure that items such as thermostats, controller etc. are accounted for whether packaged separately or shipped at a later date. Any hidden damage should be recorded, a claim should be filed with the transportation company, and the factory should be notified. In the event a claim for shipping damage is filed, the unit, shipping carton, and all packing must be retained for physical inspection by the transportation company. All units should be stored in the factory shipping carton with internal packaging in place until installation.

PROTECTING UNITS FROM DAMAGE — Do not apply force or pressure to the coil, piping, or drain stub-outs during handling. All units should be handled by the chassis or as close as possible to the unit mounting point locations.

The unit must always be properly supported. Temporary supports used during installation or service must be adequate to hold the unit securely. To maintain warranty, protect units against hostile environments (such as rain, snow or extreme temperature), theft, vandalism, and debris on jobsite. Equipment covered in this manual is not suitable for outdoor installations. Do not allow foreign material to fall into drain pan. Prevent dust and debris from being deposited on motor, fan wheels and coils. Failure to do so may have serious adverse effects on unit operation and in the case of motor and blower assembly, may result in immediate or premature failure. Failure of any unit caused by deposits of foreign material on the motor or blower wheels will not be covered by the manufacturer's warranty. Some units and/or job conditions may require some form of temporary covering during construction.

PREPARING JOBSITE FOR UNIT INSTALLATION — To save time and to reduce the possibility of costly errors, set up a complete sample installation in a typical room at jobsite. Check all critical dimensions such as pipe, wire, and duct connections requirements. Refer to job drawings and product dimension drawings as required. Instruct all trades in their parts of the installation. Units must be installed in compliance with all applicable local code requirements.

IDENTIFYING AND PREPARING UNITS — Be sure power requirements match available power source. Refer to unit nameplate and wiring diagram. In addition:

- Check all tags on unit to determine if shipping screws are to be removed. Remove screws as directed.
- Rotate the fan wheel by hand to ensure that the fan is unrestricted and can rotate freely. Check for shipping damage and fan obstructions. Adjust blower motor as required.

Step 2 — Position the Unit

⚠ DANGER

Units must not be installed where they may be exposed to potentially explosive or flammable atmosphere. If this instruction is not followed exactly, a fire or explosion may result, causing property damage, injury, or loss of life.

Install the unit in a location that meets the following requirements:

- Allow adequate space for installation, service clearance, piping and electrical connections, and necessary ductwork. For specific unit dimensions, refer to Table 1, Fig. 2, and Fig. 3. Allow clearance according to local and national codes.
- Unit can be installed standing vertically on the floor or on a field-provided stand. If a stand is used, be sure it can support the weight of the unit. Unit can also be installed horizontally, either resting on the floor or suspended from the ceiling. If suspended, confirm that the ceiling is able to support the weight of the unit. See Table 1 for nominal weight.
- If the unit is to be installed over a finished ceiling and/or living area, building codes may require a field-supplied secondary condensate drain pan to be installed under the entire unit. Consult local codes inspector for additional information.

Select the unit position with the following points in mind:

- The unit should be installed on a structure that is suitable to support the total weight of the unit, refrigerant piping and condensate.
- Proper access should be provided for maintenance for refrigerant piping, EXV (electronic expansion valve), electrical box, and condensate pump. A 2-ft clearance is recommended all around the unit.
- The unit should not be positioned close to a wall or similar obstruction, or in a position where the discharge air could blow directly on the thermostat. See Fig. 3.

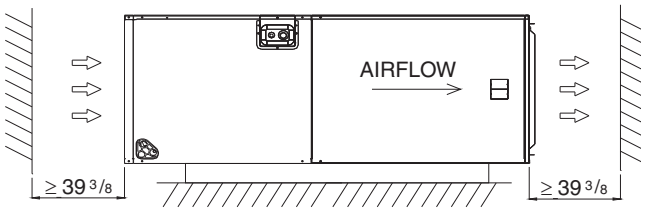

HORIZONTAL INSTALLATION

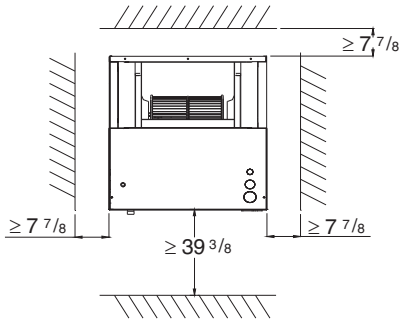

VERTICAL INSTALLATION

NOTE: All dimensions shown in inches.

Fig. 3 — Clearances

- The unit should not be positioned directly above any obstruction.
- The unit must be installed square and level.
- The condensate drain should have sufficient downward slope (1 in. per 100 in.) in any horizontal run between unit and drain.

IMPORTANT: If installed in the ceiling, be sure that the ceiling grid is supported separately from the unit. The ceiling grid must not be supported by any part of the unit, grille, or any associated wiring or piping work.

Step 3 — Install Ductwork

UP-FLOW INSTALLATION — If return air is to be ducted, install duct flush to the floor. Only use the return-air opening provided. All return air must pass through the coil.

HORIZONTAL INSTALLATIONS — Be sure installation complies with all applicable building codes, which may require installation of a secondary condensate pan.

NOTE: To ensure proper drainage for horizontal installations, unit must be installed so it is within $^1/_8$ in. level of the length and width of the unit.

1. Arrange support for unit by setting it in or above secondary condesnate pan.
2. When suspending unit from ceiling, dimples in casing indicate proper location of screws for mounting metal support straps.

DUCT CONNECTIONS — Connect supply-air duct over outside of $^3/_4$-in. flange provided on supply-air opening. Secure duct to flange with proper fasteners for type of duct used, and seal duct-to-unit joint.

Duct connection flanges are provided at the discharge air unit connection.

Use flexible connectors between ductwork and unit to prevent transmission of vibration. Ductwork passing through unconditioned space must be insulated and covered with vapor barrier.

DUCTWORK ACOUSTICAL TREATMENT — Metal duct systems that do not have a 90-degree elbow and 10 ft of main duct to first branch takeoff may require internal acoustical insulation lining.

As an alternative, fibrous ductwork may be used if constructed and installed in accordance with the latest edition of SMACNA (Sheet Metal and Air-Conditioning Contractors' National Association) construction standard on fibrous glass ducts. Both acoustical lining and fibrous ductwork shall comply with National Fire Protection Association Standards 90A or B as tested by UL (Underwriters Laboratories) Standard 181 for Class 1 air ducts.

Step 4 — Connect Piping

CONDENSATE PIPING — The unit is supplied with a $^3/_4$-in. female pipe thread drain connection to connect drain piping. When installing the unit, follow these recommendations:

- Condensate piping should slope downward in the direction of condensate flow, with a minimum gradient of 1 in. per 100 inches.
- Condensate piping should be installed in such a way that it does not block the front service panel.
- A drain trap may be required by local codes and is recommended for odor control.
- The differential height between inlet and outlet should be at least 3 inches. The differential height between the bottom of the trap and oulet should also be 3 inches. See Fig. 4.

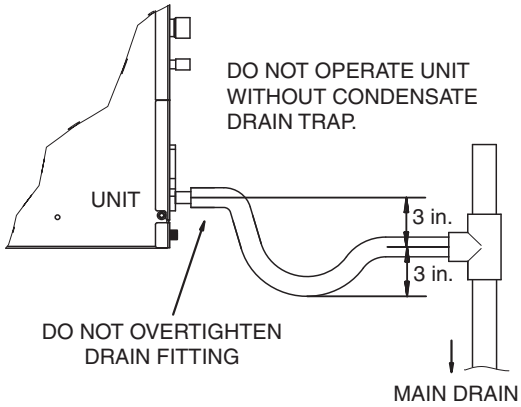

Fig. 4 — Condensate Drain Trap

- Auxiliary drain should be connected and run to a location where it is easily visible when it becomes active, suggesting a problem with the main drain system.
- When multiple units are connected to a common condensate drain, ensure that the drain is large enough to cope with the volume of condensate from all units. It is also recommended to have an air vent in the condensate piping to prevent air locks.
- Insulate the drain line to prevent sweating and provide proper support to prevent undue stress.
- Condensate piping must not be installed where it may be exposed to freezing temperatures.

REFRIGERANT PIPING

⚠ CAUTION

When connecting from an indoor unit to an outdoor unit, the isolation valve at the outdoor unit should be in the closed position throughout the refrigerant piping process. Failure to follow this procedure may result in equipment damage.

When connecting from an indoor unit to an outdoor unit, follow these procedures:

- Check for maximum height drop and length of refrigerant piping between the indoor and outdoor unit. If the difference is more than 33 ft, consider mounting the outdoor unit above indoor unit.
- Refrigerant piping connection between indoor and outdoor units should be performed once the units are secured at their respective installation locations.
- The refrigeration piping starts at the indoor unit and ends at the outdoor unit.
- The number of bends in the refrigeration piping must be fewer than 15.
- The refrigerant piping should be dry and free of dust and other contaminants.
- The bending angle of the refrigerant pipe should not exceed 90 degrees and the bending radius should be as large as possible to prevent any breakage in piping.
- Use proper cutting and flaring tools to avoid leakage.

- Before insulating the suction and liquid refrigeration pipes, perform pressure and leak tests. For details, see the outdoor unit installation manual. Insulating both suction and liquid refrigerant pipes is required.
- Vacuuming and charging of the system should be carried out as described in the outdoor unit installation manual.

Step 5 — Complete Electrical Connections —

Installation of wiring must conform with local building codes, or in the absence of local codes, with the National Electric Code ANSI/NFPA 70, current editions. Units must be electrically grounded in conformance with the code. In Canada, wiring must comply with CSA C22.1, Electrical Code.

⚠ WARNING

Electrical shock can cause personal injury and death. Disconnect power supply before making wiring connections. There may be more than one disconnect switch. Tag all disconnect locations to alert others not to restore power until work is completed.

⚠ WARNING

All units must be wired strictly in accordance with the wiring diagram furnished with the unit. Any wiring different from the wiring diagram could result in personal injury and property damage.

⚠ CAUTION

Any original factory wiring that requires replacement must be replaced with wiring material having a temperature rating of at least 221 F (105 C).

Ensure supply voltage to the unit, as indicated on the serial plate, is not more than 10% over the rated voltage or 10% under the rated voltage.

Failure to follow these recommendations may result in equipment damage.

This equipment in its standard form is designed for an electrical supply of 208/230-1-60. Any damage to or failure of units caused by incorrect wiring or voltage is not covered by warranty.

Electric wiring must be sized to carry the full load amp draw of the motor, starter, and any other controls that are used with the unit. See Table 2 for electrical data.

Table 2 — 40WAV Electrical Data

40WAF UNIT SIZE	POWER SUPPLY	
	MCA	MOPD
018	3.8	15
024	3.8	15
030	3.8	15
036	5.3	15
048	5.3	15

LEGEND

MCA — Minimum Circuit Amps
MOPD — Maximum Overcurrent Protective Device

After the pipe work is complete, the electrical supply can be connected by routing the cable through the appropriate casing holes or knockouts and connecting the supply and ground cables to the unit's power terminal.

Be sure the power wiring and control wiring do not cross, as this might cause disturbance on the controls side. See Fig. 5 for wiring diagram.

NOTE: The indoor unit requires its own power supply. Indoor units are not powered from outdoor units.

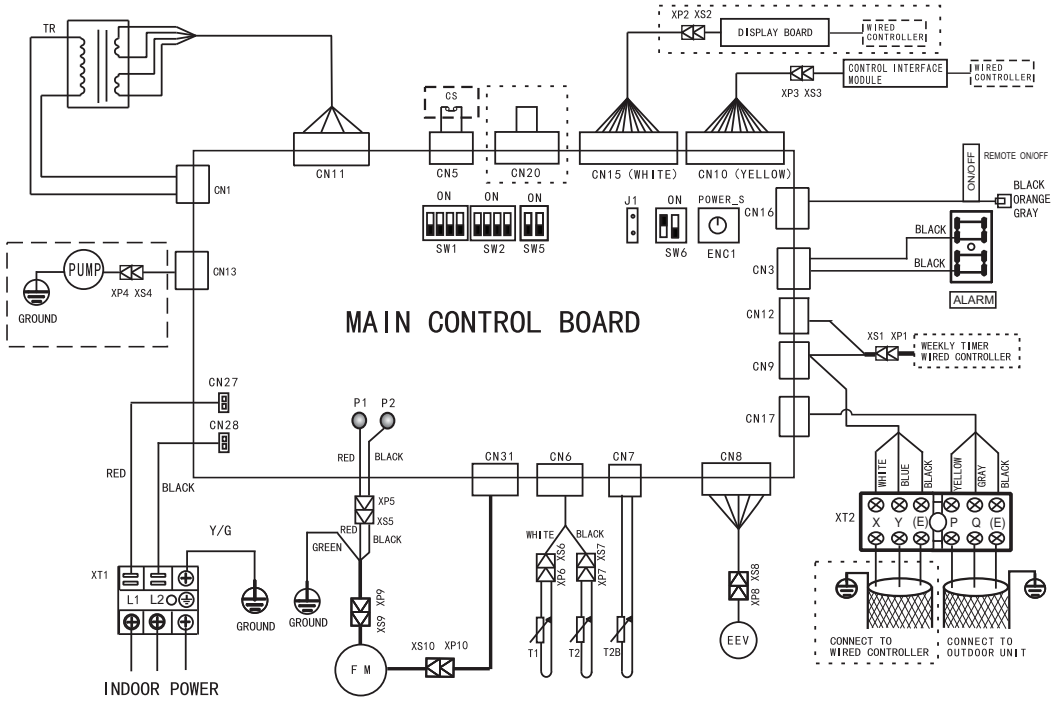

LEGEND

CS	—	Water Level Switch
EEV	—	Electronic Expansion Valve
FM	—	Indoor Fan
PUMP	—	Pump Motor
T1	—	Inlet Air Temperature
T2	—	Coil Temperature
T2B	—	Evap. Outlet Temperature in Cooling Mode
TR	—	Transformer
XP1-10	—	Plug
XS1-10	—	Jack
XT1-2	—	Terminal Block
----------		Optional Component or Field Wiring

Fig. 5 — 40WAV018-048 Typical Wiring Diagram

Step 6 — Position and Connect Controller —

Wired controllers should be installed in a position that maintains good temperature control:

- Position the thermostat approximately 48 in. above floor level.
- Do not position thermostat where it can be directly affected by the unit's discharge airstream.
- Avoid external walls and drafts from windows and doors.
- Avoid positioning near shelves and curtains as these restrict air movement.
- Avoid heat sources such as direct sunlight, heaters, dimmer switches, and other electrical devices.

REMOTE WIRED CONTROLLER (PROGRAMMABLE) — To connect a remote programmable wired controller (thermostat) to the indoor unit, use 4-core shielded cable and 4-pin connector from electrical box of indoor unit (see Fig. 6). For setup instructions, refer to the controller installation manual.

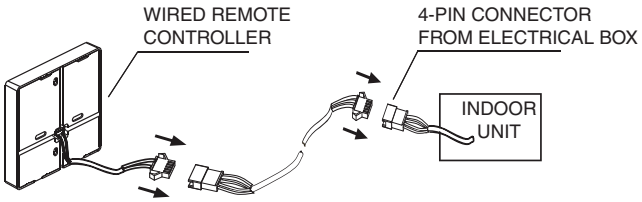

Fig. 6 — Remote Wired Controller (Programmable) Wiring

REMOTE WIRED CONTROLLER (NON-PROGRAMMABLE) — To connect remote non-programmable wired controller (thermostat) to the indoor unit, use 5-core shielded cable and 5-pin connector from unit display panel (see Fig. 7). For setup instructions, refer to the controller installation manual.

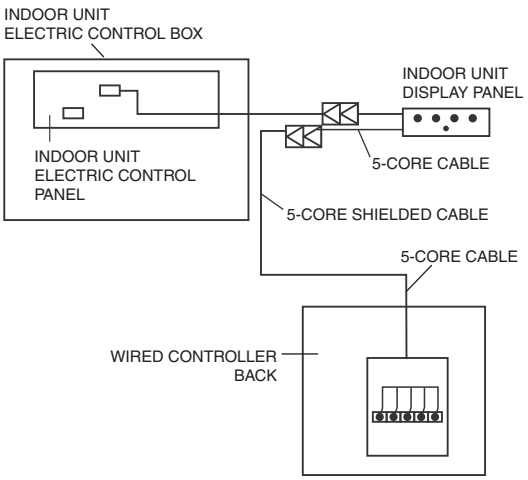

Fig. 7 — Remote Wired Controller (Non-Programmable) Wiring

CENTRAL CONTROLLER — The central controller is connected to the indoor unit through outdoor unit with 3-core shielded cable (see Fig. 8). For setup instructions, refer to the controller installation manual.

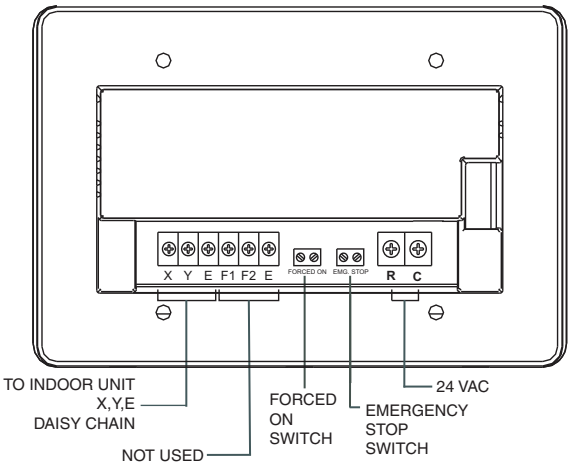

Fig. 8 — Central Controller Wiring

START-UP

Pre-Start Check — Once installation is complete, make the following pre-start checks:

1. All indoor and outdoor units are properly installed.
2. All piping and insulation is complete.
3. All electrical connections (both power and control) are properly terminated.
4. All condensate drains are installed correctly.
5. The power supply is of the right voltage and frequency.
6. The units are properly grounded in accordance with current electrical codes.
7. Suction and liquid line isolation valves are in open position.

System Operation Check — Once the installation and pre-start checks are completed, follow these steps:

1. Using remote controller, select cooling or heating mode to check the operation of the system.
2. While the system is in operation, check the following on indoor unit:
   a. Switches or buttons on the remote controller are easy to push.
   b. Indicator light is showing normal operation and no error is indicated.
   c. Swing mode of air louvers is working (if applicable to unit).
   d. Drain pump operation is normal (if applicable).
   e. No abnormal vibration or noise is noticed.
3. While the system is in operation, check the following on outdoor unit:
   a. No abnormal vibration or noise is noticed.
   b. Condenser fan is in operation.
   c. Indicator light is showing normal operation and no error is indicated.

NOTE: If the unit is turned off or restarted, there is a time delay of 3 minutes for the compressor to start from the time the power is restored.

MAINTENANCE

⚠ CAUTION

When servicing or repairing this unit, use only factory-approved service replacement parts. Refer to the rating plate on the unit for complete unit model number, serial number and company address. Any substitution of parts or controls not approved by the factory will be at the owner's risk and may result in equipment damage.

⚠ CAUTION

To avoid equipment damage, do not attempt to reuse any mechanical or electrical controllers that have been wet. Replace defective controller.

EVERY 3 MONTHS:

- Check the air filter condition. Clean or replace if necessary.

EVERY 6 MONTHS — Follow 3-month maintenance schedule. In addition:

- Clean condensate tray with suitable cleaning agent.
- Clean the grille and panel if applicable.

EVERY 12 MONTHS — Follow 6-month maintenance schedule. In addition:

- Be sure all electrical connections are secure.
- Check condensate pump operation if applicable.
- Check the heating and cooling action to confirm proper operation.

TROUBLESHOOTING

Figure 9 shows shows the LED display panel. See Table 3 for a summary of display indicators. Table 4 lists problems, possible causes, and possible solutions.

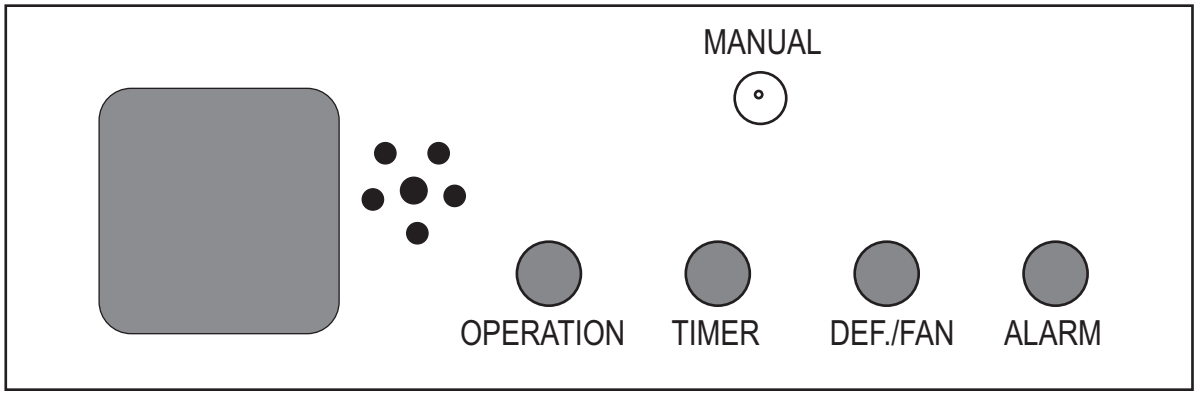

Fig. 9 — LED Display Panel

Table 3 — LED Display Indicators

ERROR CODE	LED DISPLAY	MODE/STATUS
[NO ERROR]	Operation Light ON	Starting
	Operation Light OFF	Shutdown
	Operation Light Flashing Slow*	Standby
	Timer Light ON	Timing ON
	Timer Light OFF	Timing OFF
	Defrost / Fan Light ON	System Defrost ON
	Defrost / Fan Light OFF	System Defrost OFF
E0	Defrost / Fan Light Flashing Fast†	Heating / Cooling Mode Conflict Error
E1	Timer Light Flashing Fast	Communication Error Between Indoor and Outdoor Unit
E2	Operation Light Flashing Fast	Check Indoor Ambient Temperature Sensor (T1)
E3		Check Evaporator Temperature Sensor (T2)
E4		Check Evaporator Outlet Temperature Sensor (T2B)
E6	Timer Light Flashing Slow	Fan Motor Error
E7	Defrost / Fan Light Flashing Slow	EEPROM Error (Data Storage)
Ed	Alarm Light Flashing Slow	Outdoor Unit Error
EE	Alarm Light Flashing Fast	Water Level Error
FE	Operation and Timer Light Flashing Fast	Indoor Unit Turned ON But Does Not Have An Address

*Flashing Slow = Flashing once per second.
†Flashing Fast = Flashing twice per second.

Table 4 — Troubleshooting

ERROR	DISPLAY	POSSIBLE CAUSES	POSSIBLE SOLUTIONS
E0	Defrost Light Flashing Fast (Heating/ Cooling Mode Conflict Error)	System is in cooling or fan only mode and heating signal is received from a unit on the system.	All units should be in cooling mode for system to stay in cooling mode.
		System is in heating mode and cooling signal is received from a unit on the system.	All units should be in heating mode.
E1	Timer Light Flashing Fast (Communication Error)	Signal wires are short-circuited or disconnected.	Check or reconnect signal wire.
		Signal wire order is incorrect.	Correct signal wire order.
		Signal wires crossing over high voltage power wires.	Separate and distance the signal wire from high voltage power wires.
		Signal wire close to electromagnetic source.	Distance signal wires from electromagnetic source.
		Signal wire length exceeds 360 ft.	Reduce the signal wire length.
		PC board fault.	Replace PC board.
E2, E3, E4	Operation Light Flashing Fast (Sensor Error)	Loose connection at port on PC board.	Tighten the connection at port on PC board.
		Sensor is short-circuited.	Using multi-meter, measure resistance of the sensor. If the resistance is ≤ 100 ohms, change the sensor.
		PC board fault.	Replace PC board.
E6	Timer Light Flashing Slow	DC motor fault.	Replace DC motor.
		PC board fault.	Replace PC board.
E7	Defrost Light Flashing Slow (EEPROM Error)	Chip or PC board fault.	Replace PC board.
Ed	Alarm Light Flashing Slow (Outdoor Unit Error)	Outdoor unit fault.	Refer to outdoor unit troubleshooting guide.
EE	Alarm Light Flashing Fast (Water Level Error)	Loose connection or disconnected at port on PC board.	Tighten the connection or reconnect at port on PC board.
		Water level float is stuck.	Inspect the float.
		Trap slope is too steep.	Adjust the trap slope.
		Drain pipe is too long.	Adjust the length of drain pipe.
		Drain pump faulty.	Replace the drain pump.
FE	Operation and Timer Light Flashing Fast Together (Address Error)	Indoor unit without address.	Run automatic addressing option at the outdoor unit.
			Use remote wireless or wired controller to re-address indoor unit.

Replacement Parts — Quote the unit type and unit serial number when ordering replacement parts or contacting the factory about the unit. This information can be found on the serial plate attached to the unit. See Fig. 10.

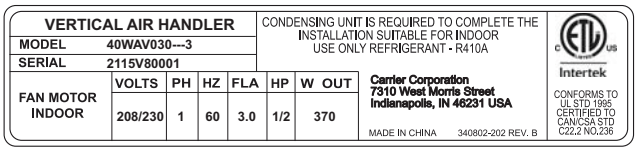

Fig. 10 — Unit Serial Plate (Example)

© Carrier Corporation 2015