24ANB1
Infinity™ 21 2–Stage Air Conditioner with Puron® Refrigerant 2 to 5 Nominal Tons

Carrier
turn to the experts™

Product Data

INFINITY™ SERIES

Carrier's Air Conditioners with Puron® refrigerant provide a collection of features unmatched by any other family of equipment. The 24ANB1 has been designed utilizing Carrier's Puron refrigerant. The environmentally sound refrigerant allows you to make a responsible decision in the protection of the earth's ozone layer.

This product has been designed and manufactured to meet Energy Star® criteria for energy efficiency when matched with appropriate coil components. Refer to the combination ratings in the Product Data for system combinations that meet Energy Star® guidelines.

NOTE: Ratings contained in this document are subject to change at any time. Always refer to the AHRI directory (www.ahridirectory.org) for the most up-to-date ratings information.

INDUSTRY LEADING FEATURES / BENEFITS

Efficiency

- 14.5 - 21 SEER / 11.7 - 15 EER
- Microtube Technology™ refrigeration system
- Indoor air quality accessories available

Sound

- Sound level as low as 65 dBA
- Quiet mount split post compressor grommets
- Electronic ECM ball bearing outdoor condenser fan motor
- Forward-swept condenser fan blade
- Compressor sound hood
- Laminated steel compressor mounting plate

Comfort

- System supports Infinity™ Control or standard 2-stage thermostat controls

Reliability

- Puron® refrigerant - environmentally sound, won't deplete the ozone layer and low lifetime service cost.
- 2-stage scroll compressor
- Internal pressure relief valve
- Internal thermal overload
- Low pressure switch
- High pressure switch
- Filter drier
- Balanced refrigeration system for maximum reliability

Controls and Diagnostics

- Infinity™ control (Dedicated A,B,C,D only)
- Utility Interface Connection
- Up to 18 point diagnostic capability

Durability

WeatherArmor™ protection package:

- Solid, Durable sheet metal construction
- Steel louver coil guard
- Baked-on, complete outer coverage, powder paint

Applications

- Long-line - up to 250 feet (76.2 m) total equivalent length, up to 200 feet (60.96 m) condenser above evaporator, or up to 80 ft. (24.38 m) evaporator above condenser (See Longline Guide for more information.)
- Low ambient (down to 0°F) with complete Infinity system.

MODEL NUMBER NOMENCLATURE

1	2	3	4	5	6	7	8	9	10	11	12	13
N	N	A	A	A/N	N	N	N	A/N	A/N	A/N	N	N
2	4	A	N	B	1	3	6	A	0	0	3	0
Product Series 24=AC		Product Family A=RES AC	Tier N = Infinity	Major Series B=Puron	SEER 1=21 SEER Nominal	Cooling Capacity		Variations A=Standard	Open 0=Not Defined	Open 0=Not Defined	Voltage 3=208/230–1	Minor Series 0, 1, 2...

Puron™ the environmentally sound refrigerant

AHRI CERTIFIED™ www.ahridirectory.org

Use of the AHRI Certified TM Mark indicates a manufacturer's participation in the program For verification of certification for individual products, go to www.ahridirectory.org.

Certified System™

ISO 9001
QMI-SAI Global

c UL US

ENERGY STAR

This product has been designed and manufactured to meet Energy Star® criteria for energy efficiency when matched with appropriate coil components. However, proper refrigerant charge and proper air flow are critical to achieve rated capacity and efficiency. Installation of this product should follow all manufacturing refrigerant charging and air flow instructions. **Failure to confirm proper charge and air flow may reduce energy efficiency and shorten equipment life.**

STANDARD FEATURES

FEATURES	Unit Size – Voltage, Series			
	24–30	36–30	48–30	60–30
Puron Refrigerant	X	X	X	X
Maximum SEER Rating*	21.0	20.0	17.7	16.7
2–Stage Scroll Compressor	X	X	X	X
Crankcase Heater w/Temperature Switch	X	X	X	X
Low Ambient Capability to 0°F (–17.8°C) w/Infinity Control	X	X	X	X
Enhanced Diagnostics w/Infinity Control	X	X	X	X
Utility Interface Connection	X	X	X	X
Louvered Coil Guard	X	X	X	X
Field Installed Filter Drier	X	X	X	X
Front Seating Service Valves	X	X	X	X
Internal Pressure Relief Valve	X	X	X	X
Internal Thermal Overload	X	X	X	X
Long Line Capability	X	X	X	X
Low Pressure Switch	X	X	X	X
High Pressure Switch	X	X	X	X
Sound Blanket	X	X	X	X

X = Standard
* With approved combinations

REFRIGERANT PIPING LENGTH LIMITATIONS

Liquid Line Sizing and Maximum Total Equivalent Lengths† for Cooling Only Systems with Puron® Refrigerant:

The maximum allowable length of a residential split system depends on the liquid line diameter and vertical separation between indoor and outdoor units.

See Table below for liquid line sizing and maximum lengths :

Maximum Total Equivalent Length
Outdoor Unit BELOW Indoor Unit

Size	Liquid Line Connection	Liquid Line Diam. w/TXV	AC with Puron Refrigerant Maximum Total Equivalent Length†: Outdoor unit BELOW Indoor Vertical Separation ft (m)								
			0–5 (0–1.5)	6–10 (1.8–3.0)	11–20 (3.4–6.1)	21–30 (6.4–9.1)	31–40 (9.4–12.2)	41–50 (12.5–15.2)	51–60 (15.5–18.3)	61–70 (18.6–21.3)	71–80 (21.6–24.4)
024 AC with Puron	3/8	1/4	75	75	75	50	50	– –	– –	– –	– –
		5/16	250*	250*	250*	250*	250*	225*	175	125	100
		3/8	250*	250*	250*	250*	250*	250*	250*	250*	250*
036 AC with Puron	3/8	5/16	175	150	150	100	100	100	75	– –	– –
		3/8	250*	250*	250*	250*	250*	250*	250*	250*	250*
048 AC with Puron	3/8	3/8	250*	250*	250*	250*	250*	250*	230	160	– –
060 AC with Puron	3/8	3/8	250*	250*	250*	225*	190	150	110	– –	– –

*** Maximum actual length not to exceed 200 ft (61 m)**

† Total equivalent length accounts for losses due to elbows or fitting. See the Long Line Guideline for details.

– – = outside acceptable range

Maximum Total Equivalent Length
Outdoor Unit ABOVE Indoor Unit

Size	Liquid Line Connection	Liquid Line Diam. w/TXV	AC with Puron Refrigerant Maximum Total Equivalent Length†: Outdoor unit ABOVE Indoor Vertical Separation ft (m)							
			25 (7.6)	26–50 (7.9–15.2)	51–75 (15.5–22.9)	76–100 (23.2–30.5)	101–125 (30.8–38.1)	126–150 (38.4–45.7)	151–175 (46.0–53.3)	176–200 (53.6–61.0)
024 AC with Puron	3/8	1/4	100	125	175	200	225*	250*	250*	250*
		5/16	250*	250*	250*	250*	250*	250*	250*	250*
		3/8	250*	250*	250*	250*	250*	250*	250*	250*
036 AC with Puron	3/8	5/16	225*	250*	250*	250*	250*	250*	250*	250*
		3/8	250*	250*	250*	250*	250*	250*	250*	250*
048 AC with Puron	3/8	3/8	250*	250*	250*	250*	250*	250*	250*	250*
060 AC with Puron	3/8	3/8	250*	250*	250*	250*	250*	250*	250*	250*

*** Maximum actual length not to exceed 200 ft (61 m)**

† Total equivalent length accounts for losses due to elbows or fitting. See the Long Line Guideline for details.

REFRIGERANT CHARGE ADJUSTMENTS

Liquid Line Size	Puron Charge oz/ft (g/m)
3/8	0.60 (17.74) (Factory charge for lineset = 9 oz / 266.16 g)
5/16	0.40 (11.83)
1/4	0.27 (7.98)

Units are factory charged for 15 ft (4.6 m) of 3/8” liquid line. The factory charge for 3/8” lineset 9 oz.(266.16 g). When using other length or diameter liquid lines, charge adjustments are required per the chart above.

Charging Formula:

[(Lineset oz/ft x total length) – (factory charge for lineset)] = charge adjustment

Example 1: System has 15 ft of line set using existing 1/4“ liquid line. What charge adjustment is required?

Formula: (.27 oz/ft x 15ft) – (9 oz) = (-4.95) oz.

Net result is to remove 4.95 oz of refrigerant from the system

Example 2: System has 45 ft of existing 5/16” liquid line. What is the charge adjustment?

Formula: (.40 oz/ft. x 45ft) – (9 oz.) = 9 oz.

Net result is to add 9 oz of refrigerant to the system

LONG LINE APPLICATIONS

An application is considered Long Line, when the refrigerant level in the system requires the use of accessories to maintain acceptable refrigerant management for systems reliability. See Accessory Usage Guideline table for required accessories. Defining a system as long line depends on the liquid line diameter, actual length of the tubing, and vertical separation between the indoor and outdoor units.

For Air Conditioner systems, the chart below shows when an application is considered Long Line.

AC WITH PURON® REFRIGERANT LONG LINE DESCRIPTION ft (m)
Beyond these lengths, long line accessories are required

Liquid Line Size	Units On Same Level	Outdoor Below Indoor	Outdoor Above Indoor
1/4	No accessories needed within allowed lengths	No accessories needed within allowed lengths	175 (53.3)
5/16	120 (36.6)	50 (15.2) vertical or 120 (36.6) total	120 (36.6)
3/8	80 (24.4)	35 (10.7) vertical or 80 24.4) total	80 (24.4)

Note: See Long Line Guideline for details

24ANB1

VAPOR LINE SIZING AND COOLING CAPACITY LOSS

Acceptable vapor line diameters provide adequate oil return to the compressor while avoiding excessive capacity loss. The suction line diameters shown in the chart below are acceptable for AC systems with Puron refrigerant:

Vapor Line Sizing and Cooling Capacity Losses — Puron® Refrigerant 2-Stage Air Conditioner Applications

Unit Nominal Size (Btuh)	Maximum Liquid Line Diameters (In. OD)	Vapor Line Diameters (In.) OD	Cooling Capacity Loss (%) Total Equivalent Line Length ft. (m)								
			26–50 (7.9–15.2)	51–80 (15.5–24.4)	81–100 (24.7–30.5)	101–125 (30.8–38.1)	126–150 (38.4–45.7)	151–175 (46.0–50.3)	176–200 (53.6–60.0)	201–225 (61.3–68.6)	226–250 (68.9–76.2)
024 2–Stage Puron AC	3/8	5/8	0	1	1	2	3	3	4	4	5
		3/4	0	0	0	0	1	1	1	1	1
036 2–Stage Puron AC	3/8	5/8	1	2	4	5	6	7	9	10	11
		3/4	0	0	1	1	2	2	3	3	4
		7/8	0	0	0	0	1	1	1	1	2
048 2–Stage Puron AC	3/8	3/4	1	2	2	3	4	5	6	7	7
		7/8	0	1	1	2	2	2	3	3	3
		1–1/8	0	0	—	—	—	—	—	—	—
060 2–Stage Puron AC	3/8	3/4	1	2	4	5	6	7	9	10	11
		7/8	0	1	2	2	3	4	4	5	5
		1–1/8	0	0	0	1	1	1	1	1	1

Applications in this area may be long line and may have height restrictions. See the *Residential Piping and Long Line Guideline*.
— Applications in this area are not recommended due to insufficient oil return

PHYSICAL DATA

UNIT SIZE – VOLTAGE, SERIES	24–30	36–30	48–30	60–30
Operating Weight lb (kg)	323 (147)	324 (147)	325 (147)	350 (159)
Shipping Weight lb (kg)	368 (167)	368 (167)	370 (168)	394 (179)
Compressor Type	2–Stage Scroll			
REFRIGERANT	Puron® (R–410A)			
Control	TXV (Puron® Hard Shutoff)			
Charge lb (kg)	14.71 (6.67)	14.36 (6.51)	14.45 (6.55)	14.83 (6.73)
COND FAN	Propeller Type, Direct Drive			
Air Discharge	Vertical			
Air Qty (CFM)	3040 / 3637	3124 / 3700	3703 / 4309	4209 / 4668
Motor HP	1/5	1/5	1/5	1/5
Motor RPM	628 / 752	582 / 689	659 / 765	742 / 828
COND COIL				
Face Area (Sq ft)	30.18	30.18	30.18	30.18
Fins per In.	20	20	20	20
Rows	2	2	2	2
Circuits	9	9	9	9
VALVE CONNECT. (In. ID)				
Vapor	7/8	7/8	7/8	7/8
Liquid	3/8			
REFRIGERANT TUBES (In. OD)				
Rated Vapor*	7/8	7/8	1–1/8	1–1/8
Liquid	3/8			

*Units are rated with 25 ft (7.6 m) of lineset length. See *Vapor Line Sizing and Cooling Capacity Loss* table when using other sizes and lengths of lineset.

ELECTRICAL DATA

Unit Size – Voltage, Series	V/PH	OPER VOLTS*		COMPR		FAN	MCA	MIN WIRE SIZE†	MIN WIRE SIZE†	MAX LENGTH ft. (m)‡	MAX LENGTH ft. (m)‡	MAX FUSE** or CKT BRK AMPS
		MIN	MAX	RLA	LRA	FLA		60° C	75° C	60° C	75° C	
24–30	208/230	197	253	10.3	52.0	1.4	14.3	14.00	14.00	55 (12.8)	52 (11.1)	20
36–30	208/230			16.7	82.0	1.7	22.6	12.00	12.00	55 (12.8)	53 (11.7)	35
48–30	208/230			21.2	96.0	1.9	28.4	10.00	10.00	70 (21.1)	67 (19.4)	40
60–30	208/230			23.0	118.0	1.9	30.7	8.00	10.00	101 (38.3)	62 (16.7)	50

* Permissible limits of the voltage range at which the unit will operate satisfactorily

† If wire is applied at ambient greater than 30°C, consult table 310–16 of the NEC (NFPA 70). The ampacity of non–metallic–sheathed cable (NM), trade name ROMEX, shall be that of 60°C conditions, per the NEC (NFPA 70) Article 336–26. If other than uncoated (no–plated), 60 or 75°C insulation, copper wire (solid wire for 10 AWG or smaller, stranded wire for larger than 10 AWG) is used, consult applicable tables of the NEC (NFPA 70).

‡ Length shown is as measured one way along wire path between unit and service panel for voltage drop not to exceed 2%.

** Time–Delay fuse.

FLA – Full Load Amps
LRA – Locked Rotor Amps
MCA – Minimum Circuit Amps
RLA – Rated Load Amps
NOTE: Control circuit is 24–V on all units and requires external power source. Copper wire must be used from service disconnect to unit. All motors/compressors contain internal overload protection.

Complies with 2010 requirements of ASHRAE Standards 90.1

A-WEIGHTED SOUND POWER (dBA)

Unit Size – Voltage, Series	Standard Rating (dBA)	Typical Octave Band Spectrum (dBA, without tone adjustment)						
		125	250	500	1000	2000	4000	8000
24–30	65–low stage	52.0	52.5	58.5	59.5	58.0	55.5	52.0
	72–high stage	53.5	58.5	65.0	65.5	58.5	60.0	55.5
36–30	71–low stage	51.5	58.5	61.0	65.0	57.5	56.5	55.0
	71–high stage	57.5	57.0	62.0	61.5	57.5	53.5	48.0
48–30	66–low stage	50.5	55.0	59.0	60.0	58.0	53.0	48.0
	70–high stage	53.0	59.0	62.5	64.0	60.5	56.5	53.0
60–30	68–low stage	50.0	58.5	62.5	61.5	59.5	57.0	51.5
	71–high stage	55.0	60.0	63.5	66.0	60.0	57.5	50.5

NOTE: Tested in accordance with AHRI Standard 270–08. (Not listed with AHRI).

CHARGING SUBCOOLING (TXV-TYPE EXPANSION DEVICE)

UNIT SIZE–VOLTAGE, SERIES	REQUIRED SUBCOOLING °F (°C)
24–30	9 (5.0)
36–30	12 (6.7)
48–30	14 (7.8)
60–30	16 (8.9)

ACCESSORY CONTROLS

PART NUMBER	DESCRIPTION
SYSTXCCUID01–V	Infinity Control Deluxe 7–Day Programmable (4–Wire User Interface w/ multiple functionality)
SYSTXCCUIZ01–V	Infinity Control Deluxe Zoning 7–Day Programmable (Wall–mounted control for a multi–zone system. w/ multiple functionality)
SYSTXCCUID01–B	Infinity Control Deluxe 7–Day Programmable (Wall–mounted system control.)
SYSTXCCUIZ01–B	Infinity Control Deluxe Zoning 7–Day Programmable (Wall–mounted control for a multi–zone system.)
SYSTXCC4ZC01	Infinity 4–Zone Damper Control Module (Wall–mounted control for a four–zone system.)
SYSTXCCSMS01	Infinity Smart Sensor (Optional wall control used to monitor temperature and/or fan control in an individual zone.)
SYSTXCCRRS01	Infinity Remote Room Sensor (Monitors temperature in an individual zone.)
SYSTXCCRCT01 or SYSTXCCRWF01	Infinity System Access Module (Hardware for wireless access and control via internet.)
SYSTXCCNIM01	Infinity Network Interface Module (Connects Heat Recovery and Energy Recovery Ventilators on non–zoning applications.)

ACCESSORIES

ORDER NUMBER	DESCRIPTION	24–30	36–30	48–30	60–30
KAALS0201LLS	LIQUID LINE SOLENOID VALVE KIT	X	X	X	X
KSAHS2301AAA	HARD START KIT	X			
KSAHS2401AAA	HARD START KIT		X		
KSAHS2501AAA	HARD START KIT			X	
KSAHS2601AAA	HARD START KIT				X
KSASF0101AAA	SUPPORT FEET	X	X	X	X
KSATX0201PUR	TXV PURON HSO	X			
KSATX0301PUR	TXV PURON HSO		X		
KSATX0401PUR	TXV PURON HSO			X	
KSATX0501PUR	TXV PURON HSO				X

x = Accessory

ACCESSORY USAGE GUIDELINE

ACCESSORY	REQUIRED FOR LOW–AMBIENT COOLING APPLICATIONS (Below 55°F/12.8°C)	REQUIRED FOR LONG LINE APPLICATIONS* (Over 80 ft/24.38 m)	REQUIRED FOR SEA COAST APPLICATIONS (Within 2 miles/3.22 km)
Crankcase Heater	Standard	Standard	Standard
Evaporator Freeze Protection	Standard with Infinity™ Control (Low Ambient not allowed with non–communicating thermostat)	No	No
Liquid–Line Solenoid Valve	No	No	No
Low–Ambient Control	Standard with Infinity Control (Low ambient not allowed with non–communicating thermostat)	No	No
Puron Refrigerant Balance Port Hard–ShutOff TXV	Yes†	Yes†	Yes†
Support Feet	Recommended	No	Recommended
Winter Start Control	Standard with Infinity Control (Low Ambient not allowed with non–communicating thermostat)	No	No

* For tubing set lengths between 80 and 200 ft. (24.38 and 60.96 m) horizontal or 35 ft. (10.7 m) vertical differential (total equivalent length), refer to the Long Line Guideline—Air Conditioners and Heat Pumps using Puron® Refrigerant.

† Required on all indoor units. Standard on all new Puron refrigerant fan coils and furnace coils.

Accessory Description and Usage (Listed Alphabetically)

1. Compressor Start Assist - Capacitor and Relay

Start capacitor and relay gives a ”hard” boost to compressor motor at each start up.

Usage Guideline:

Not required on this unit since compressor always starts unloaded.

Available if required by local codes.

2. Crankcase Heater

An electric resistance heater which mounts to the base of the compressor to keep the lubricant warm during off cycles. Improves compressor lubrication on restart and minimizes the chance of liquid slugging.

Usage Guideline:

Required in low ambient cooling applications.

Required in long line applications.

Suggested in all commercial applications.

3. Support Feet

Four stick-on plastic feet that raise the unit 4 in. (101.6 mm) above the mounting pad. This allows sand, dirt, and other debris to be flushed from the unit base, minimizing corrosion.

Usage Guideline:

Suggested in the following applications:

Coastal installations.

Windy areas or where debris is normally circulating.

Rooftop installations.

For improved sound ratings.

4. Thermostatic Expansion Valve (TXV)

A modulating flow-control valve which meters refrigerant liquid flow rate into the evaporator in response to the superheat of the refrigerant gas leaving the evaporator.

Kit includes valve, adapter tubes, and external equalizer tube. Hard shut off types are available.

NOTE: When using a hard shut off TXV with single phase reciprocating compressors, a Compressor Start Assist Capacitor and Relay is required.

Usage Guideline:

Required to achieve AHRI ratings in certain equipment combinations. Refer to combination ratings.

Hard shut off TXV or LLS required in air conditioner long line applications.

DIMENSIONS - ENGLISH

UNIT	SERIES	ELECTRICAL CHARACTERISTICS				A	B	C	D	E	F	G	K	L	M	N	P	OPERATING WEIGHT (lbs)	SHIPPING WEIGHT (lbs)	SHIPPING DIMENSIONS (L x W x H)
24ANB124	0	X	O	O	O	35"	47 7/16"	3 7/8"	7/8"	6 9/16"	28 7/16"	9 1/8"	2 15/16"	5/8"	18"	17 1/2"	21"	323	368	36 1/8" X 39 1/4" X 49 9/16"
24ANB136	0	X	O	O	O	35"	47 7/16"	3 7/8"	7/8"	6 9/16"	28 7/16"	9 1/8"	2 15/16"	5/8"	17 3/4"	17 1/4"	20 3/4"	324	368	36 1/8" X 39 1/4" X 49 9/16"
24ANB148	0	X	O	O	O	35"	47 7/16"	3 7/8"	7/8"	6 9/16"	28 7/16"	9 1/8"	2 15/16"	5/8"	18 1/4"	18"	21 1/2"	325	370	36 1/8" X 39 1/4" X 49 9/16"
24ANB160	0	X	O	O	O	35"	47 7/16"	3 7/8"	7/8"	6 9/16"	28 7/16"	9 1/8"	2 15/16"	5/8"	18"	16 3/4"	21 3/4"	350	394	36 1/8" X 39 1/4" X 49 9/16"
		208-230-1-60	230-1-60	208/230-3-60	460-3-60															

X = YES
O = NO

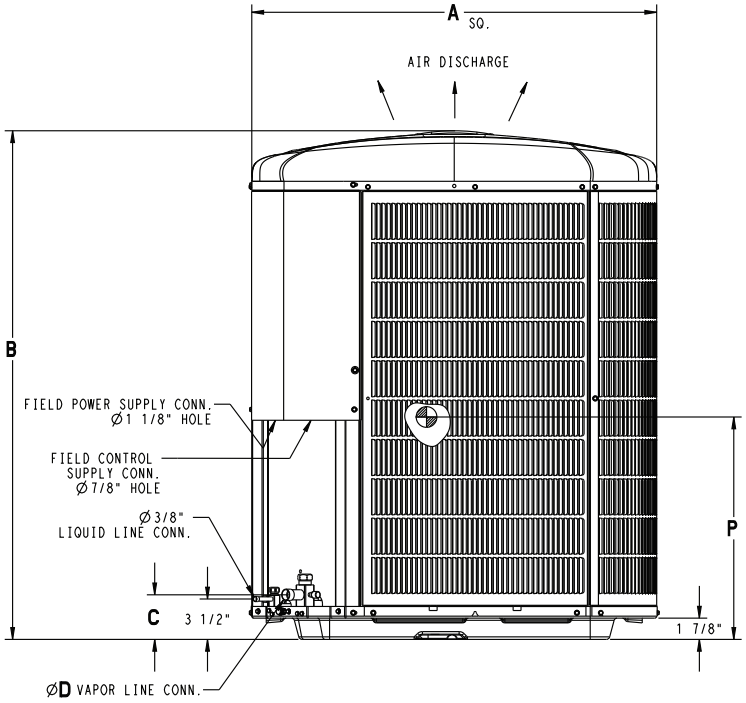

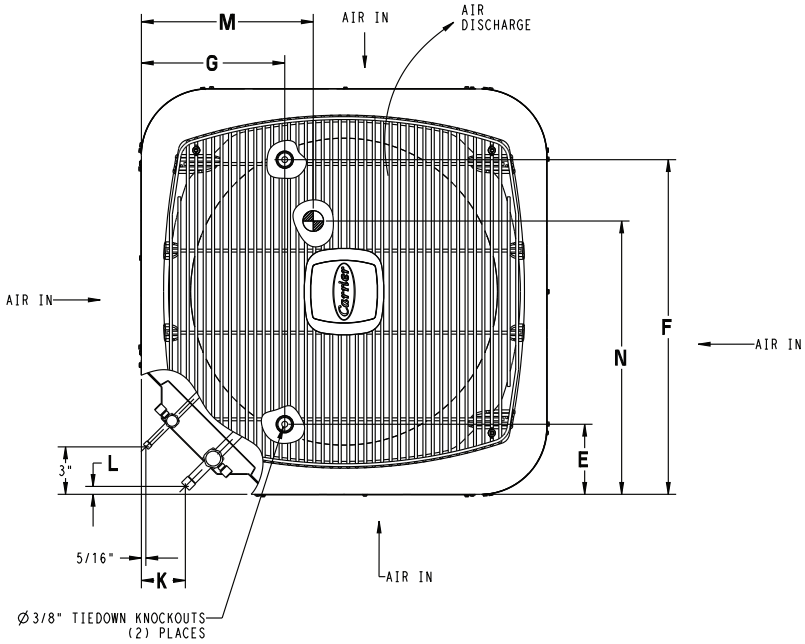

UNIT SIZE	MINIMUM MOUNTING PAD DIMENSIONS
	31 1/2" X 31 1/2"
24, 36, 48, 60	35" X 35"

DIMENSIONS - SI

UNIT	SERIES	ELECTRICAL CHARACTERISTICS				A	B	C	D	E	F	G	K	L	M	N	P	OPERATING WEIGHT (Kgs)	SHIPPING WEIGHT (Kgs)	SHIPPING DIMENSIONS (L x W x H)
24ANB124	0	X	O	O	O	889.0	1205.3	97.9	22.2	166.1	722.8	231.3	74.5	16.3	457.2	444.5	533.4	147	167	917.7 X 997.7 X 1315.7
24ANB136	0	X	O	O	O	889.0	1205.3	97.9	22.2	166.1	722.8	231.3	74.5	16.3	450.9	438.2	527.1	147	167	917.7 X 997.7 X 1315.7
24ANB148	0	X	O	O	O	889.0	1205.3	97.9	22.2	166.1	722.8	231.3	74.5	16.3	463.6	457.2	546.1	147	168	917.7 X 997.7 X 1315.7
24ANB160	0	X	O	O	O	889.0	1205.3	97.9	22.2	166.1	722.8	231.3	74.5	16.3	457.2	450.9	552.5	159	179	917.7 X 997.7 X 1315.7
		208-230-1-60	230-1-60	208/230-3-60	460-3-60															

X = YES
O = NO

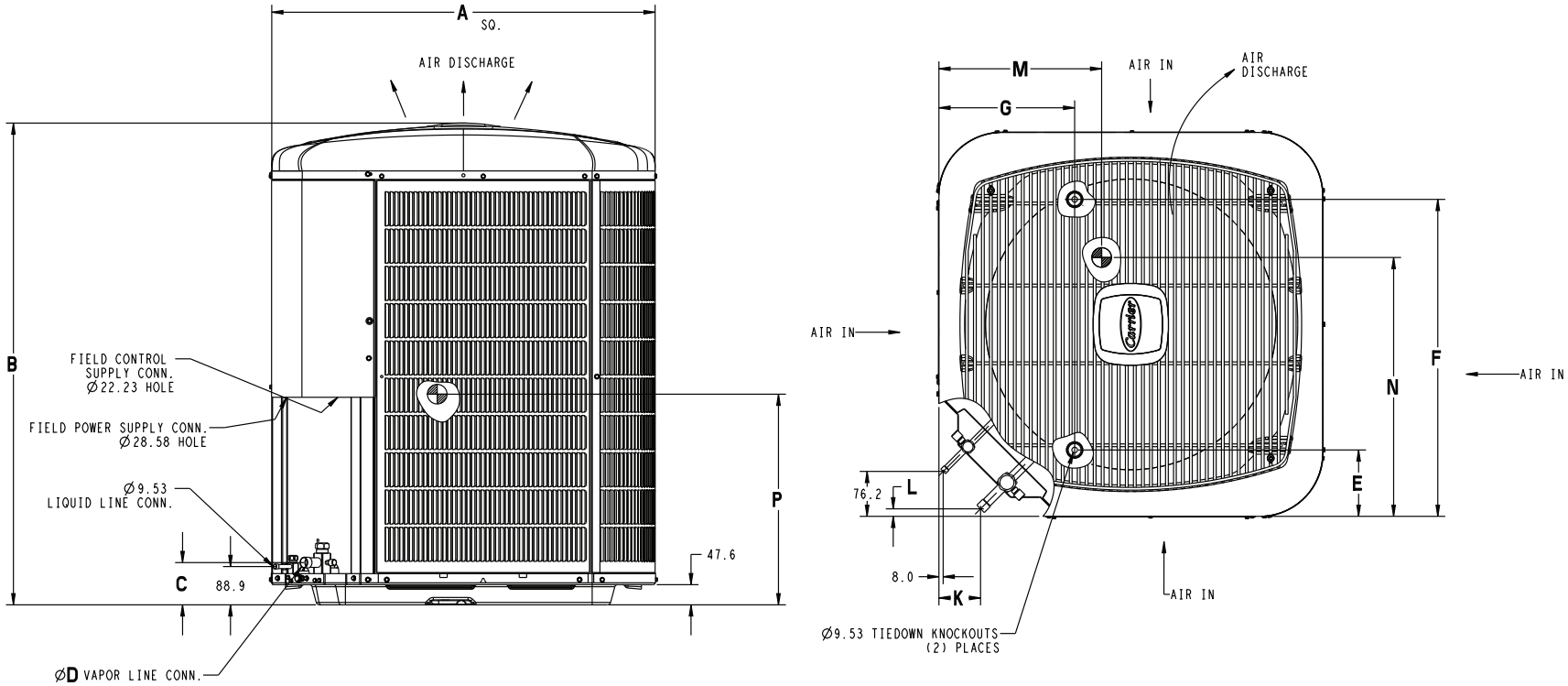

UNIT SIZE	MINIMUM MOUNTING PAD DIMENSIONS
	800.1 X 800.1
24, 36, 48, 60	889.0 X 889.0

CLEARANCES

Clearances (various examples)

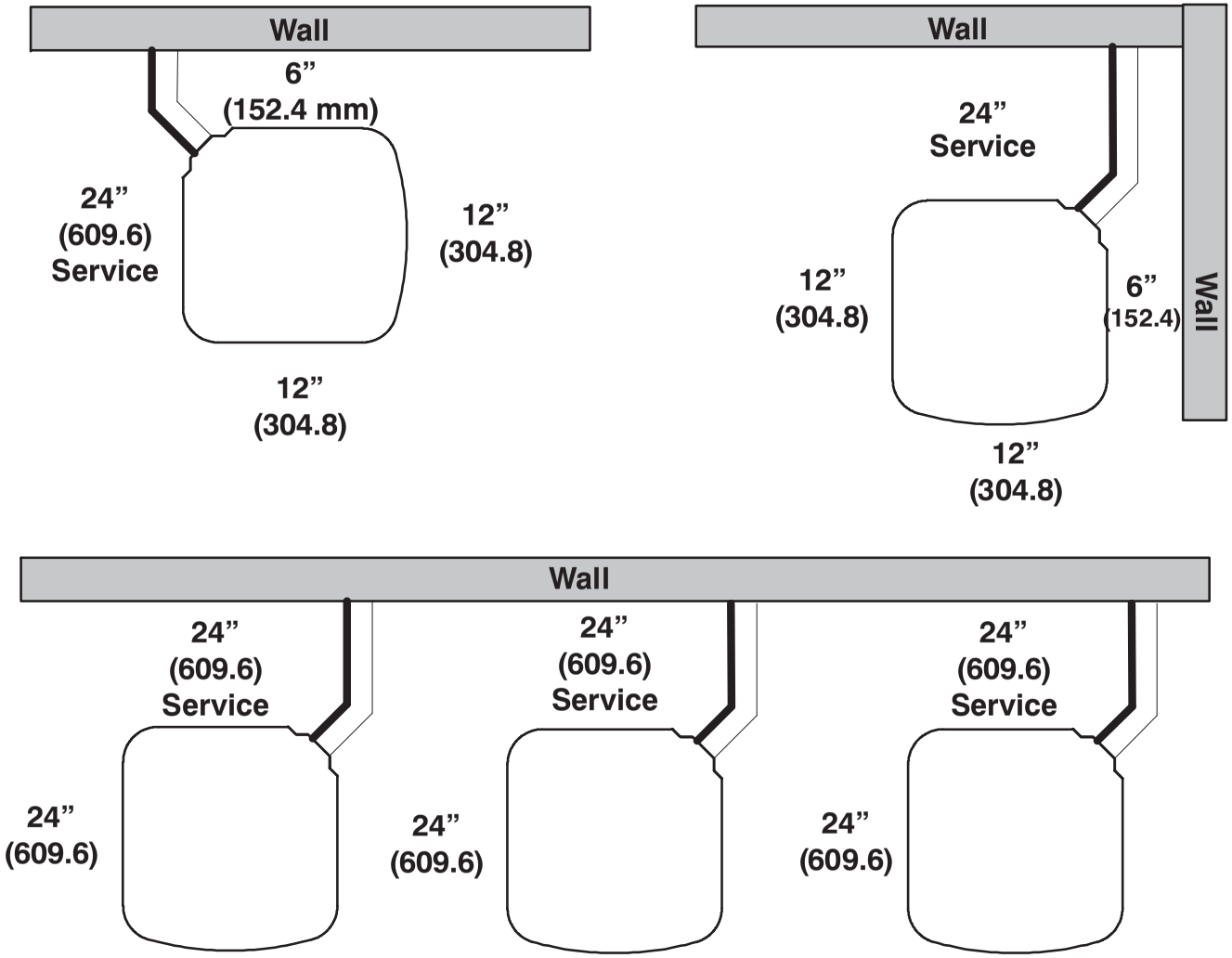

Note: Numbers in ( ) = mm

IMPORTANT: When installing multiple units in an alcove, roof well, or partially enclosed area, ensure there is adequate ventilation to prevent re-circulation of discharge air.

A07833

COMBINATION RATINGS

AHRI Ref. Number	Model Number	Indoor Coil Model Number	Furnace Model Number	AHRI Standard Ratings – Cooling				
				Cooling Capacity	EER	SEER	ID CFM	
							High	Low
4645818	24ANB124A**30	†FE5ANB004+UI		26,600	15.0	21.0	800	800
4646111	24ANB124A**30	CAP**2414A**	58PH*045–08	25,000	13.7	19.0	710	580
4646088	24ANB124A**30	CAP**2414A**+TDR		24,800	12.5	16.5	800	640
4645819	24ANB124A**30	CAP**2414A**+UI	58CV(A,X)070–12	25,400	14.0	19.2	800	800
4645824	24ANB124A**30	CAP**2417A**	58HDV040––12	25,000	13.5	19.0	745	575
4645825	24ANB124A**30	CAP**2417A**	58HDV060––12	25,200	13.7	19.0	795	615
4646131	24ANB124A**30	CAP**2417A**	58MEB040–12	25,400	14.2	19.7	765	655
4646132	24ANB124A**30	CAP**2417A**	58MEC060–12	25,400	14.2	19.7	780	625
4646112	24ANB124A**30	CAP**2417A**	58PH*045–08	25,000	13.7	19.0	725	585
4645821	24ANB124A**30	CAP**2417A**	58UVB060–14	25,200	14.0	19.2	725	725
4645827	24ANB124A**30	CAP**2417A**	58VLR105–12	25,000	14.0	19.2	715	470
4645826	24ANB124A**30	CAP**2417A**	58VMR105–12	25,400	13.8	19.2	800	485
4739526	24ANB124A**30	CAP**2417A**	59*P5A040E14**10	25,400	13.0	18.6	785	530
4739527	24ANB124A**30	CAP**2417A**	59*P5A060E17**14	25,400	13.7	19.3	905	705
4646167	24ANB124A**30	CAP**2417A**	OVLAAB036098	25,600	13.5	19.2	865	530
4645828	24ANB124A**30	CAP**2417A**	OVMAAB036098	25,000	13.7	19.2	725	550
4645829	24ANB124A**30	CAP**2417A**	OVMAAB042112	25,600	14.0	19.7	875	785
4646089	24ANB124A**30	CAP**2417A**+TDR		24,800	12.5	16.5	800	640
4645822	24ANB124A**30	CAP**2417A**+UI	58CV(A,X)070–12	25,400	14.0	19.2	800	800
4645823	24ANB124A**30	CAP**2417A**+UI	58CV(A,X)090–16	25,400	14.2	19.5	800	800
4645820	24ANB124A**30	CAP**2417A**+UI	58MV(B,C)060–14	25,400	14.2	19.2	800	800
4739563	24ANB124A**30	CAP**2417A**+UI	59*N*A060V17**14	25,400	14.0	18.9	750	750
4739564	24ANB124A**30	CAP**2417A**+UI	59*N*A080V17**14	25,200	13.7	19.0	750	750
4646113	24ANB124A**30	CAP**3014A**	58PH*045–08	25,200	13.7	19.0	720	585
4739528	24ANB124A**30	CAP**3014A**	59*P5A040E14**10	25,000	13.0	18.2	780	530
4646090	24ANB124A**30	CAP**3014A**+TDR		25,000	12.5	16.5	800	640
4645830	24ANB124A**30	CAP**3014A**+UI	58CV(A,X)070–12	25,600	14.2	19.2	800	800
4645835	24ANB124A**30	CAP**3017A**	58HDV040––12	25,400	13.7	19.0	760	590
4645836	24ANB124A**30	CAP**3017A**	58HDV060––12	25,600	13.7	19.0	810	635
4646133	24ANB124A**30	CAP**3017A**	58MEB040–12	25,600	14.2	19.7	785	685
4646134	24ANB124A**30	CAP**3017A**	58MEC060–12	25,600	14.2	19.7	795	650
4646114	24ANB124A**30	CAP**3017A**	58PH*045–08	25,200	14.0	19.2	735	600
4645832	24ANB124A**30	CAP**3017A**	58UVB060–14	25,200	14.2	19.5	725	725
4645838	24ANB124A**30	CAP**3017A**	58VLR105–12	25,200	14.2	19.3	715	470
4645837	24ANB124A**30	CAP**3017A**	58VMR105–12	25,600	14.0	19.2	800	485
4739529	24ANB124A**30	CAP**3017A**	59*P5A040E14**10	25,600	13.1	18.7	795	540
4739530	24ANB124A**30	CAP**3017A**	59*P5A060E17**14	25,600	13.8	19.3	920	720
4646168	24ANB124A**30	CAP**3017A**	OVLAAB036098	25,800	13.7	19.2	865	530
4645839	24ANB124A**30	CAP**3017A**	OVMAAB036098	25,200	14.0	19.2	725	550
4645840	24ANB124A**30	CAP**3017A**	OVMAAB042112	25,800	14.2	19.7	875	785
4646091	24ANB124A**30	CAP**3017A**+TDR		25,000	12.5	16.5	800	640
4645833	24ANB124A**30	CAP**3017A**+UI	58CV(A,X)070–12	25,600	14.2	19.2	800	800
4645834	24ANB124A**30	CAP**3017A**+UI	58CV(A,X)090–16	25,600	14.2	19.7	800	800
4645831	24ANB124A**30	CAP**3017A**+UI	58MV(B,C)060–14	25,600	14.2	19.5	800	800
4739565	24ANB124A**30	CAP**3017A**+UI	59*N*A060V17**14	25,600	14.1	19.0	750	750
4739566	24ANB124A**30	CAP**3017A**+UI	59*N*A080V17**14	25,400	14.0	19.0	750	750
4646115	24ANB124A**30	CAP**3614A**	58PH*045–08	25,200	14.0	19.2	725	590
4739531	24ANB124A**30	CAP**3614A**	59*P5A040E14**10	25,200	13.0	18.5	785	535
4646092	24ANB124A**30	CAP**3614A**+TDR		25,200	12.5	16.5	800	640
4645841	24ANB124A**30	CAP**3614A**+UI	58CV(A,X)070–12	25,600	14.2	19.2	800	800
4645846	24ANB124A**30	CAP**3617A**	58HDV040––12	25,400	13.7	19.2	765	595
4645847	24ANB124A**30	CAP**3617A**	58HDV060––12	25,600	13.7	19.2	820	640
4646135	24ANB124A**30	CAP**3617A**	58MEB040–12	25,800	14.2	19.7	790	695
4646136	24ANB124A**30	CAP**3617A**	58MEC060–12	25,800	14.2	19.7	805	660
4646116	24ANB124A**30	CAP**3617A**	58PH*045–08	25,400	14.0	19.2	740	600
4645843	24ANB124A**30	CAP**3617A**	58UVB060–14	25,400	14.2	19.7	725	725
4645849	24ANB124A**30	CAP**3617A**	58VLR105–12	25,400	14.2	19.2	715	470
4645848	24ANB124A**30	CAP**3617A**	58VMR105–12	25,800	14.2	19.2	800	485
4739532	24ANB124A**30	CAP**3617A**	59*P5A040E14**10	25,600	13.2	18.8	800	540
4739533	24ANB124A**30	CAP**3617A**	59*P5A060E17**14	25,800	13.9	19.4	925	725
4646169	24ANB124A**30	CAP**3617A**	OVLAAB036098	25,800	13.7	19.2	865	530
4645850	24ANB124A**30	CAP**3617A**	OVMAAB036098	25,200	14.0	19.5	725	550
4645851	24ANB124A**30	CAP**3617A**	OVMAAB042112	26,000	14.2	19.7	875	785
4646093	24ANB124A**30	CAP**3617A**+TDR		25,200	12.5	16.5	800	640
4645844	24ANB124A**30	CAP**3617A**+UI	58CV(A,X)070–12	25,800	14.2	19.5	800	800
4645845	24ANB124A**30	CAP**3617A**+UI	58CV(A,X)090–16	25,800	14.5	19.7	800	800
4645842	24ANB124A**30	CAP**3617A**+UI	58MV(B,C)060–14	25,800	14.2	19.5	800	800
4739567	24ANB124A**30	CAP**3617A**+UI	59*N*A060V17**14	25,800	14.2	19.1	750	750
4739568	24ANB124A**30	CAP**3617A**+UI	59*N*A080V17**14	25,400	14.0	19.2	750	750
4645878	24ANB124A**30	CAP**3619A**	58HDV040––12	25,400	13.7	19.2	765	595
4645879	24ANB124A**30	CAP**3619A**	58HDV060––12	25,600	13.7	19.2	820	640

See notes on page 33

COMBINATION RATINGS CONTINUED

AHRI Ref. Number	Model Number	Indoor Coil Model Number	Furnace Model Number	AHRI Standard Ratings – Cooling				
				Cooling Capacity	EER	SEER	ID CFM	
							High	Low
4646139	24ANB124A**30	CAP**3619A**	58MEB040–12	25,800	14.2	19.7	790	695
4646140	24ANB124A**30	CAP**3619A**	58MEC060–12	25,800	14.2	19.7	805	660
4645872	24ANB124A**30	CAP**3619A**	58UVB060–14	25,400	14.2	19.7	725	725
4645873	24ANB124A**30	CAP**3619A**	58UVB080–14	25,800	14.0	19.0	820	820
4645874	24ANB124A**30	CAP**3619A**	58UVB080–20	25,800	14.0	19.0	840	840
4645875	24ANB124A**30	CAP**3619A**	58UVB100–20	25,600	14.0	19.0	800	800
4645881	24ANB124A**30	CAP**3619A**	58VLR105–12	25,400	14.2	19.2	715	470
4645880	24ANB124A**30	CAP**3619A**	58VMR105–12	25,800	14.2	19.2	800	485
4739535	24ANB124A**30	CAP**3619A**	59*P5A060E17**14	25,800	13.9	19.4	925	725
4646171	24ANB124A**30	CAP**3619A**	OVLAAB036098	25,800	13.7	19.2	865	530
4645882	24ANB124A**30	CAP**3619A**	OVMAAB036098	25,200	14.0	19.5	725	550
4645883	24ANB124A**30	CAP**3619A**	OVMAAB042112	26,000	14.2	20.0	875	785
4646095	24ANB124A**30	CAP**3619A**+TDR		25,200	12.5	16.5	800	640
4645876	24ANB124A**30	CAP**3619A**+UI	58CV(A,X)090–16	25,800	14.5	19.7	800	800
4645877	24ANB124A**30	CAP**3619A**+UI	58CV(A,X)110–20	25,800	14.2	19.7	800	800
4645868	24ANB124A**30	CAP**3619A**+UI	58MV(B,C)060–14	25,800	14.2	19.5	800	800
4645869	24ANB124A**30	CAP**3619A**+UI	58MV(B,C)080–14	25,600	14.2	19.2	800	800
4645870	24ANB124A**30	CAP**3619A**+UI	58MV(B,C)080–20	25,600	14.2	19.2	800	800
4645871	24ANB124A**30	CAP**3619A**+UI	58MV(B,C)100–20	25,800	14.2	19.5	800	800
4739572	24ANB124A**30	CAP**3619A**+UI	59*N*A060V17**14	25,800	14.2	19.1	750	750
4739573	24ANB124A**30	CAP**3619A**+UI	59*N*A080V17**14	25,600	14.2	19.2	750	750
4739574	24ANB124A**30	CAP**3619A**+UI	59*N*A100V21**20	25,800	14.2	19.4	750	750
4645862	24ANB124A**30	CAP**3621A**	58HDV040––12	25,600	13.7	19.2	780	605
4645863	24ANB124A**30	CAP**3621A**	58HDV060––12	25,800	13.7	19.2	840	660
4646137	24ANB124A**30	CAP**3621A**	58MEB040–12	25,800	14.5	20.0	810	730
4646138	24ANB124A**30	CAP**3621A**	58MEC060–12	25,800	14.5	20.0	820	695
4645856	24ANB124A**30	CAP**3621A**	58UVB060–14	25,400	14.2	19.7	725	725
4645857	24ANB124A**30	CAP**3621A**	58UVB080–14	25,800	14.2	19.2	820	820
4645858	24ANB124A**30	CAP**3621A**	58UVB080–20	25,800	14.2	19.2	840	840
4645859	24ANB124A**30	CAP**3621A**	58UVB100–20	25,600	14.2	19.2	800	800
4645865	24ANB124A**30	CAP**3621A**	58VLR105–12	25,400	14.2	19.5	715	470
4645864	24ANB124A**30	CAP**3621A**	58VMR105–12	25,800	14.2	19.5	800	485
4739534	24ANB124A**30	CAP**3621A**	59*P5A060E17**14	25,800	14.0	19.5	945	745
4646170	24ANB124A**30	CAP**3621A**	OVLAAB036098	25,800	14.0	19.2	865	530
4645866	24ANB124A**30	CAP**3621A**	OVMAAB036098	25,400	14.0	19.5	725	550
4645867	24ANB124A**30	CAP**3621A**	OVMAAB042112	26,000	14.2	20.0	875	785
4646094	24ANB124A**30	CAP**3621A**+TDR		25,200	12.5	16.5	800	640
4645860	24ANB124A**30	CAP**3621A**+UI	58CV(A,X)090–16	25,800	14.5	20.0	800	800
4645861	24ANB124A**30	CAP**3621A**+UI	58CV(A,X)110–20	25,800	14.5	19.7	800	800
4645852	24ANB124A**30	CAP**3621A**+UI	58MV(B,C)060–14	25,800	14.5	19.7	800	800
4645853	24ANB124A**30	CAP**3621A**+UI	58MV(B,C)080–14	25,800	14.2	19.5	800	800
4645854	24ANB124A**30	CAP**3621A**+UI	58MV(B,C)080–20	25,800	14.2	19.5	800	800
4645855	24ANB124A**30	CAP**3621A**+UI	58MV(B,C)100–20	25,800	14.2	19.5	800	800
4739569	24ANB124A**30	CAP**3621A**+UI	59*N*A060V17**14	25,800	14.2	19.3	750	750
4739570	24ANB124A**30	CAP**3621A**+UI	59*N*A080V17**14	25,800	14.2	19.5	750	750
4739571	24ANB124A**30	CAP**3621A**+UI	59*N*A100V21**20	25,800	14.2	19.5	750	750
4645964	24ANB124A**30	CNPH*2417A**	58HDV040––12	25,400	13.0	18.5	855	655
4645965	24ANB124A**30	CNPH*2417A**	58HDV060––12	25,000	13.5	18.7	750	585
4645966	24ANB124A**30	CNPH*2417A**	58HDV080––20	25,400	13.7	19.2	825	650
4645967	24ANB124A**30	CNPH*2417A**	58HDV100––20	25,200	13.7	19.2	775	600
4646153	24ANB124A**30	CNPH*2417A**	58MEB040–12	25,200	14.0	19.5	725	610
4646154	24ANB124A**30	CNPH*2417A**	58MEC060–12	25,200	14.0	19.5	735	575
4646124	24ANB124A**30	CNPH*2417A**	58PH*045–08	24,800	13.7	19.0	695	565
4645969	24ANB124A**30	CNPH*2417A**	58VLR105–12	25,000	14.0	19.0	715	470
4645968	24ANB124A**30	CNPH*2417A**	58VMR105–12	25,400	13.6	19.0	800	485
4739549	24ANB124A**30	CNPH*2417A**	59*P5A040E14**10	25,200	12.9	18.5	765	520
4739550	24ANB124A**30	CNPH*2417A**	59*P5A060E17**14	25,200	13.6	19.1	865	670
4646178	24ANB124A**30	CNPH*2417A**	OVLAAB036098	25,400	13.2	19.0	865	530
4645970	24ANB124A**30	CNPH*2417A**	OVMAAB036098	25,000	13.7	19.2	725	550
4645971	24ANB124A**30	CNPH*2417A**	OVMAAB042112	25,600	13.5	19.2	875	785
4646104	24ANB124A**30	CNPH*2417A**+TDR		24,800	12.5	16.5	800	640
4645959	24ANB124A**30	CNPH*2417A**+UI	58CV(A,X)070–12	25,400	14.0	19.0	800	800
4645960	24ANB124A**30	CNPH*2417A**+UI	58CV(A,X)090–16	25,400	14.0	19.2	800	800
4645961	24ANB124A**30	CNPH*2417A**+UI	58CV(A,X)110–20	25,400	14.0	19.0	800	800
4645962	24ANB124A**30	CNPH*2417A**+UI	58CV(A,X)135–22	25,400	14.0	19.2	800	800
4645963	24ANB124A**30	CNPH*2417A**+UI	58CV(A,X)155–22	25,400	14.0	19.2	800	800
4645954	24ANB124A**30	CNPH*2417A**+UI	58MV(B,C)060–14	25,400	14.0	19.0	800	800
4645955	24ANB124A**30	CNPH*2417A**+UI	58MV(B,C)080–14	25,400	13.7	18.7	800	800
4645956	24ANB124A**30	CNPH*2417A**+UI	58MV(B,C)080–20	25,400	13.7	18.7	800	800
4645957	24ANB124A**30	CNPH*2417A**+UI	58MV(B,C)100–20	25,400	13.7	18.7	800	800
4645958	24ANB124A**30	CNPH*2417A**+UI	58MV(B,C)120–20	25,400	14.0	19.0	800	800

See notes on page 33

COMBINATION RATINGS CONTINUED

AHRI Ref. Number	Model Number	Indoor Coil Model Number	Furnace Model Number	AHRI Standard Ratings – Cooling				
				Cooling Capacity	EER	SEER	ID CFM	
							High	Low
4645953	24ANB124A**30	CNPH*2417A**+UI	58MVB040–14	25,400	13.7	18.7	800	800
4739588	24ANB124A**30	CNPH*2417A**+UI	59*N*A060V17**14	25,400	13.8	18.6	750	750
4739589	24ANB124A**30	CNPH*2417A**+UI	59*N*A080V17**14	25,400	13.7	18.7	750	750
4645983	24ANB124A**30	CNPH*3017A**	58HDV040––12	25,200	13.7	19.0	750	585
4645984	24ANB124A**30	CNPH*3017A**	58HDV060––12	25,600	13.7	19.0	805	630
4645985	24ANB124A**30	CNPH*3017A**	58HDV080––20	26,000	14.0	19.5	895	710
4645986	24ANB124A**30	CNPH*3017A**	58HDV100––20	25,800	14.2	19.5	845	660
4646155	24ANB124A**30	CNPH*3017A**	58MEB040–12	25,600	14.2	19.7	775	675
4646156	24ANB124A**30	CNPH*3017A**	58MEC060–12	25,600	14.2	19.7	790	645
4646125	24ANB124A**30	CNPH*3017A**	58PH*045–08	25,200	14.0	19.2	730	595
4645988	24ANB124A**30	CNPH*3017A**	58VLR105–12	25,200	14.2	19.3	715	470
4645987	24ANB124A**30	CNPH*3017A**	58VMR105–12	25,600	14.0	19.2	800	485
4739551	24ANB124A**30	CNPH*3017A**	59*P5A040E14**10	25,600	13.1	18.7	790	540
4739552	24ANB124A**30	CNPH*3017A**	59*P5A060E17**14	25,600	13.8	19.3	910	715
4646179	24ANB124A**30	CNPH*3017A**	OVLAAB036098	25,800	13.7	19.2	865	530
4645989	24ANB124A**30	CNPH*3017A**	OVMAAB036098	25,200	13.7	19.2	725	550
4645990	24ANB124A**30	CNPH*3017A**	OVMAAB042112	26,000	14.0	19.7	875	785
4646105	24ANB124A**30	CNPH*3017A**+TDR		25,000	12.5	16.5	800	640
4645978	24ANB124A**30	CNPH*3017A**+UI	58CV(A,X)070–12	25,600	14.2	19.2	800	800
4645979	24ANB124A**30	CNPH*3017A**+UI	58CV(A,X)090–16	25,800	14.2	19.7	800	800
4645980	24ANB124A**30	CNPH*3017A**+UI	58CV(A,X)110–20	25,600	14.2	19.5	800	800
4645981	24ANB124A**30	CNPH*3017A**+UI	58CV(A,X)135–22	25,800	14.2	19.7	800	800
4645982	24ANB124A**30	CNPH*3017A**+UI	58CV(A,X)155–22	25,800	14.5	19.7	800	800
4645973	24ANB124A**30	CNPH*3017A**+UI	58MV(B,C)060–14	25,600	14.2	19.5	800	800
4645974	24ANB124A**30	CNPH*3017A**+UI	58MV(B,C)080–14	25,600	14.0	19.2	800	800
4645975	24ANB124A**30	CNPH*3017A**+UI	58MV(B,C)080–20	25,600	14.2	19.2	800	800
4645976	24ANB124A**30	CNPH*3017A**+UI	58MV(B,C)100–20	25,600	14.2	19.2	800	800
4645977	24ANB124A**30	CNPH*3017A**+UI	58MV(B,C)120–20	25,600	14.2	19.5	800	800
4645972	24ANB124A**30	CNPH*3017A**+UI	58MVB040–14	25,600	14.2	19.2	800	800
4739590	24ANB124A**30	CNPH*3017A**+UI	59*N*A060V17**14	25,600	14.1	19.0	750	750
4739591	24ANB124A**30	CNPH*3017A**+UI	59*N*A080V17**14	25,600	14.0	19.2	750	750
4739592	24ANB124A**30	CNPH*3017A**+UI	59*N*A100V21**20	25,600	14.2	19.2	750	750
4646002	24ANB124A**30	CNPH*3117A**	58HDV040––12	25,800	14.0	19.5	760	595
4646003	24ANB124A**30	CNPH*3117A**	58HDV060––12	26,200	14.0	19.5	815	640
4646004	24ANB124A**30	CNPH*3117A**	58HDV080––20	26,600	14.2	20.0	915	725
4646005	24ANB124A**30	CNPH*3117A**	58HDV100––20	26,400	14.5	20.0	860	670
4646157	24ANB124A**30	CNPH*3117A**	58MEB040–12	26,200	14.7	20.2	790	695
4646158	24ANB124A**30	CNPH*3117A**	58MEC060–12	26,200	14.7	20.2	800	660
4646126	24ANB124A**30	CNPH*3117A**	58PH*045–08	25,800	14.2	19.5	740	600
4646007	24ANB124A**30	CNPH*3117A**	58VLR105–12	25,800	14.5	19.7	715	470
4646006	24ANB124A**30	CNPH*3117A**	58VMR105–12	26,200	14.2	19.7	800	485
4739553	24ANB124A**30	CNPH*3117A**	59*P5A040E14**10	26,200	13.4	19.1	800	545
4739554	24ANB124A**30	CNPH*3117A**	59*P5A060E17**14	26,200	14.1	19.8	925	725
4646180	24ANB124A**30	CNPH*3117A**	OVLAAB036098	26,400	14.0	19.5	865	530
4646008	24ANB124A**30	CNPH*3117A**	OVMAAB036098	25,800	14.2	19.7	725	550
4646009	24ANB124A**30	CNPH*3117A**	OVMAAB042112	26,400	14.5	20.2	875	785
4646106	24ANB124A**30	CNPH*3117A**+TDR		25,600	12.7	16.7	800	640
4645997	24ANB124A**30	CNPH*3117A**+UI	58CV(A,X)070–12	26,200	14.5	19.7	800	800
4645998	24ANB124A**30	CNPH*3117A**+UI	58CV(A,X)090–16	26,200	14.7	20.2	800	800
4645999	24ANB124A**30	CNPH*3117A**+UI	58CV(A,X)110–20	26,200	14.7	20.0	800	800
4646000	24ANB124A**30	CNPH*3117A**+UI	58CV(A,X)135–22	26,200	14.7	20.2	800	800
4646001	24ANB124A**30	CNPH*3117A**+UI	58CV(A,X)155–22	26,200	14.7	20.2	800	800
4645992	24ANB124A**30	CNPH*3117A**+UI	58MV(B,C)060–14	26,200	14.5	20.0	800	800
4645993	24ANB124A**30	CNPH*3117A**+UI	58MV(B,C)080–14	26,200	14.5	19.7	800	800
4645994	24ANB124A**30	CNPH*3117A**+UI	58MV(B,C)080–20	26,200	14.5	19.7	800	800
4645995	24ANB124A**30	CNPH*3117A**+UI	58MV(B,C)100–20	26,200	14.5	19.7	800	800
4645996	24ANB124A**30	CNPH*3117A**+UI	58MV(B,C)120–20	26,200	14.5	20.0	800	800
4645991	24ANB124A**30	CNPH*3117A**+UI	58MVB040–14	26,200	14.5	19.7	800	800
4739593	24ANB124A**30	CNPH*3117A**+UI	59*N*A060V17**14	26,200	14.4	19.5	750	750
4739594	24ANB124A**30	CNPH*3117A**+UI	59*N*A080V17**14	26,200	14.5	19.7	750	750
4739595	24ANB124A**30	CNPH*3117A**+UI	59*N*A100V21**20	26,200	14.5	19.7	750	750
4739596	24ANB124A**30	CNPH*3117A**+UI	59*N*A120V24**22	26,200	14.5	19.9	750	750
4646021	24ANB124A**30	CNPH*3617A**	58HDV040––12	25,200	13.7	19.0	750	585
4646022	24ANB124A**30	CNPH*3617A**	58HDV060––12	25,600	13.7	19.0	805	630
4646023	24ANB124A**30	CNPH*3617A**	58HDV080––20	26,000	14.0	19.5	895	710
4646024	24ANB124A**30	CNPH*3617A**	58HDV100––20	25,800	14.2	19.5	845	660
4646159	24ANB124A**30	CNPH*3617A**	58MEB040–12	25,600	14.2	19.7	775	675
4646160	24ANB124A**30	CNPH*3617A**	58MEC060–12	25,600	14.2	19.7	790	645
4646127	24ANB124A**30	CNPH*3617A**	58PH*045–08	25,200	14.0	19.2	730	595
4646026	24ANB124A**30	CNPH*3617A**	58VLR105–12	25,200	14.2	19.2	715	470
4646025	24ANB124A**30	CNPH*3617A**	58VMR105–12	25,600	14.0	19.2	800	485

See notes on page 33

COMBINATION RATINGS CONTINUED

AHRI Ref. Number	Model Number	Indoor Coil Model Number	Furnace Model Number	AHRI Standard Ratings – Cooling				
				Cooling Capacity	EER	SEER	ID CFM	
							High	Low
4739555	24ANB124A**30	CNPH*3617A**	59*P5A040E14**10	25,600	13.1	18.7	790	540
4739556	24ANB124A**30	CNPH*3617A**	59*P5A060E17**14	25,600	13.8	19.3	910	715
4646181	24ANB124A**30	CNPH*3617A**	OVLAAB036098	25,800	13.7	19.2	865	530
4646027	24ANB124A**30	CNPH*3617A**	OVMAAB036098	25,200	13.7	19.2	725	550
4646028	24ANB124A**30	CNPH*3617A**	OVMAAB042112	26,000	14.0	19.7	875	785
4646107	24ANB124A**30	CNPH*3617A**+TDR		25,000	12.5	16.5	800	640
4646016	24ANB124A**30	CNPH*3617A**+UI	58CV(A,X)070–12	25,600	14.2	19.2	800	800
4646017	24ANB124A**30	CNPH*3617A**+UI	58CV(A,X)090–16	25,800	14.2	19.7	800	800
4646018	24ANB124A**30	CNPH*3617A**+UI	58CV(A,X)110–20	25,600	14.2	19.5	800	800
4646019	24ANB124A**30	CNPH*3617A**+UI	58CV(A,X)135–22	25,800	14.2	19.7	800	800
4646020	24ANB124A**30	CNPH*3617A**+UI	58CV(A,X)155–22	25,800	14.5	19.7	800	800
4646011	24ANB124A**30	CNPH*3617A**+UI	58MV(B,C)060–14	25,600	14.2	19.5	800	800
4646012	24ANB124A**30	CNPH*3617A**+UI	58MV(B,C)080–14	25,600	14.0	19.2	800	800
4646013	24ANB124A**30	CNPH*3617A**+UI	58MV(B,C)080–20	25,600	14.2	19.2	800	800
4646014	24ANB124A**30	CNPH*3617A**+UI	58MV(B,C)100–20	25,600	14.2	19.2	800	800
4646015	24ANB124A**30	CNPH*3617A**+UI	58MV(B,C)120–20	25,600	14.2	19.5	800	800
4646010	24ANB124A**30	CNPH*3617A**+UI	58MVB040–14	25,600	14.2	19.2	800	800
4739597	24ANB124A**30	CNPH*3617A**+UI	59*N*A060V17**14	25,600	14.1	19.0	750	750
4739598	24ANB124A**30	CNPH*3617A**+UI	59*N*A080V17**14	25,600	14.0	19.2	750	750
4739599	24ANB124A**30	CNPH*3617A**+UI	59*N*A100V21**20	25,600	14.2	19.2	750	750
4739600	24ANB124A**30	CNPH*3617A**+UI	59*N*A120V24**22	25,600	14.2	19.5	750	750
4646117	24ANB124A**30	CNPV*2414A**	58PH*045–08	24,800	13.7	19.0	695	565
4739536	24ANB124A**30	CNPV*2414A**	59*P5A040E14**10	24,800	12.7	18.2	765	520
4646096	24ANB124A**30	CNPV*2414A**+TDR		24,800	12.5	16.5	800	640
4645884	24ANB124A**30	CNPV*2414A**+UI	58CV(A,X)070–12	25,400	14.0	19.0	800	800
4645889	24ANB124A**30	CNPV*2417A**	58HDV040––12	25,400	13.0	18.5	855	655
4645890	24ANB124A**30	CNPV*2417A**	58HDV060––12	25,000	13.5	18.7	750	585
4646141	24ANB124A**30	CNPV*2417A**	58MEB040–12	25,200	14.0	19.5	725	610
4646142	24ANB124A**30	CNPV*2417A**	58MEC060–12	25,200	14.0	19.5	735	575
4646118	24ANB124A**30	CNPV*2417A**	58PH*045–08	24,800	13.7	19.0	695	565
4645886	24ANB124A**30	CNPV*2417A**	58UVB060–14	25,000	13.7	19.0	725	725
4645892	24ANB124A**30	CNPV*2417A**	58VLR105–12	25,000	14.0	19.0	715	470
4645891	24ANB124A**30	CNPV*2417A**	58VMR105–12	25,400	13.6	19.0	800	485
4739537	24ANB124A**30	CNPV*2417A**	59*P5A040E14**10	25,200	12.9	18.5	765	520
4739538	24ANB124A**30	CNPV*2417A**	59*P5A060E17**14	25,200	13.6	19.1	865	670
4646172	24ANB124A**30	CNPV*2417A**	OVLAAB036098	25,400	13.2	19.0	865	530
4645893	24ANB124A**30	CNPV*2417A**	OVMAAB036098	25,000	13.7	19.2	725	550
4645894	24ANB124A**30	CNPV*2417A**	OVMAAB042112	25,600	13.5	19.2	875	785
4646097	24ANB124A**30	CNPV*2417A**+TDR		24,800	12.5	16.5	800	640
4645887	24ANB124A**30	CNPV*2417A**+UI	58CV(A,X)070–12	25,400	14.0	19.0	800	800
4645888	24ANB124A**30	CNPV*2417A**+UI	58CV(A,X)090–16	25,400	14.0	19.2	800	800
4645885	24ANB124A**30	CNPV*2417A**+UI	58MV(B,C)060–14	25,400	14.0	19.0	800	800
4739575	24ANB124A**30	CNPV*2417A**+UI	59*N*A060V17**14	25,400	13.8	18.6	750	750
4739576	24ANB124A**30	CNPV*2417A**+UI	59*N*A080V17**14	25,200	13.7	18.7	750	750
4646119	24ANB124A**30	CNPV*3014A**	58PH*045–08	25,200	13.7	19.0	705	580
4739539	24ANB124A**30	CNPV*3014A**	59*P5A040E14**10	25,000	13.0	18.2	770	530
4646098	24ANB124A**30	CNPV*3014A**+TDR		25,000	12.5	16.5	800	640
4645895	24ANB124A**30	CNPV*3014A**+UI	58CV(A,X)070–12	25,600	14.0	19.0	800	800
4645900	24ANB124A**30	CNPV*3017A**	58HDV040––12	25,200	13.7	19.0	750	585
4645901	24ANB124A**30	CNPV*3017A**	58HDV060––12	25,600	13.7	19.0	805	630
4646143	24ANB124A**30	CNPV*3017A**	58MEB040–12	25,600	14.2	19.7	775	675
4646144	24ANB124A**30	CNPV*3017A**	58MEC060–12	25,600	14.2	19.7	790	645
4646120	24ANB124A**30	CNPV*3017A**	58PH*045–08	25,200	14.0	19.2	730	595
4645897	24ANB124A**30	CNPV*3017A**	58UVB060–14	25,400	14.2	19.5	725	725
4645903	24ANB124A**30	CNPV*3017A**	58VLR105–12	25,200	14.2	19.3	715	470
4645902	24ANB124A**30	CNPV*3017A**	58VMR105–12	25,600	14.0	19.2	800	485
4739540	24ANB124A**30	CNPV*3017A**	59*P5A040E14**10	25,600	13.1	18.7	790	540
4739541	24ANB124A**30	CNPV*3017A**	59*P5A060E17**14	25,600	13.8	19.3	910	715
4646173	24ANB124A**30	CNPV*3017A**	OVLAAB036098	25,800	13.7	19.2	865	530
4645904	24ANB124A**30	CNPV*3017A**	OVMAAB036098	25,200	13.7	19.2	725	550
4645905	24ANB124A**30	CNPV*3017A**	OVMAAB042112	26,000	14.0	19.7	875	785
4646099	24ANB124A**30	CNPV*3017A**+TDR		25,000	12.5	16.5	800	640
4645898	24ANB124A**30	CNPV*3017A**+UI	58CV(A,X)070–12	25,600	14.2	19.2	800	800
4645899	24ANB124A**30	CNPV*3017A**+UI	58CV(A,X)090–16	25,800	14.2	19.7	800	800
4645896	24ANB124A**30	CNPV*3017A**+UI	58MV(B,C)060–14	25,600	14.2	19.5	800	800
4739577	24ANB124A**30	CNPV*3017A**+UI	59*N*A060V17**14	25,600	14.1	19.0	750	750
4739578	24ANB124A**30	CNPV*3017A**+UI	59*N*A080V17**14	25,400	14.0	19.0	750	750
4645910	24ANB124A**30	CNPV*3117A**	58HDV040––12	25,800	14.0	19.5	760	590
4645911	24ANB124A**30	CNPV*3117A**	58HDV060––12	26,200	14.0	19.5	815	635
4646145	24ANB124A**30	CNPV*3117A**	58MEB040–12	26,200	14.7	20.2	785	690
4646146	24ANB124A**30	CNPV*3117A**	58MEC060–12	26,200	14.7	20.2	800	655

See notes on page 33

COMBINATION RATINGS CONTINUED

AHRI Ref. Number	Model Number	Indoor Coil Model Number	Furnace Model Number	AHRI Standard Ratings – Cooling				
				Cooling Capacity	EER	SEER	ID CFM	
							High	Low
4646121	24ANB124A**30	CNPV*3117A**	58PH*045–08	25,800	14.0	19.5	735	600
4645907	24ANB124A**30	CNPV*3117A**	58UVB060–14	25,800	14.5	20.0	725	725
4645913	24ANB124A**30	CNPV*3117A**	58VLR105–12	25,800	14.5	19.7	715	470
4645912	24ANB124A**30	CNPV*3117A**	58VMR105–12	26,200	14.2	19.5	800	485
4739542	24ANB124A**30	CNPV*3117A**	59*P5A040E14**10	26,200	13.4	19.0	795	540
4739543	24ANB124A**30	CNPV*3117A**	59*P5A060E17**14	26,200	14.1	19.7	920	720
4646174	24ANB124A**30	CNPV*3117A**	OVLAAB036098	26,400	14.0	19.5	865	530
4645914	24ANB124A**30	CNPV*3117A**	OVMAAB036098	25,800	14.2	19.7	725	550
4645915	24ANB124A**30	CNPV*3117A**	OVMAAB042112	26,400	14.5	20.2	875	785
4646100	24ANB124A**30	CNPV*3117A**+TDR		25,600	12.8	17.0	800	640
4645908	24ANB124A**30	CNPV*3117A**+UI	58CV(A,X)070–12	26,200	14.5	19.7	800	800
4645909	24ANB124A**30	CNPV*3117A**+UI	58CV(A,X)090–16	26,200	14.7	20.0	800	800
4645906	24ANB124A**30	CNPV*3117A**+UI	58MV(B,C)060–14	26,200	14.5	19.7	800	800
4739579	24ANB124A**30	CNPV*3117A**+UI	59*N*A060V17**14	26,200	14.4	19.4	750	750
4739580	24ANB124A**30	CNPV*3117A**+UI	59*N*A080V17**14	25,800	14.2	19.5	750	750
4645920	24ANB124A**30	CNPV*3617A**	58HDV040––12	25,200	13.7	19.0	750	585
4645921	24ANB124A**30	CNPV*3617A**	58HDV060––12	25,600	13.7	19.0	805	630
4646147	24ANB124A**30	CNPV*3617A**	58MEB040–12	25,600	14.2	19.7	775	675
4646148	24ANB124A**30	CNPV*3617A**	58MEC060–12	25,600	14.2	19.7	790	645
4646122	24ANB124A**30	CNPV*3617A**	58PH*045–08	25,200	14.0	19.2	730	595
4645917	24ANB124A**30	CNPV*3617A**	58UVB060–14	25,400	14.2	19.5	725	725
4645923	24ANB124A**30	CNPV*3617A**	58VLR105–12	25,200	14.2	19.2	715	470
4645922	24ANB124A**30	CNPV*3617A**	58VMR105–12	25,600	14.0	19.2	800	485
4739544	24ANB124A**30	CNPV*3617A**	59*P5A040E14**10	25,600	13.1	18.7	790	540
4739545	24ANB124A**30	CNPV*3617A**	59*P5A060E17**14	25,600	13.8	19.3	910	715
4646175	24ANB124A**30	CNPV*3617A**	OVLAAB036098	25,800	13.7	19.2	865	530
4645924	24ANB124A**30	CNPV*3617A**	OVMAAB036098	25,200	13.7	19.2	725	550
4645925	24ANB124A**30	CNPV*3617A**	OVMAAB042112	26,000	14.2	19.7	875	785
4646101	24ANB124A**30	CNPV*3617A**+TDR		25,000	12.5	16.5	800	640
4645918	24ANB124A**30	CNPV*3617A**+UI	58CV(A,X)070–12	25,600	14.2	19.2	800	800
4645919	24ANB124A**30	CNPV*3617A**+UI	58CV(A,X)090–16	25,800	14.2	19.7	800	800
4645916	24ANB124A**30	CNPV*3617A**+UI	58MV(B,C)060–14	25,600	14.2	19.5	800	800
4739581	24ANB124A**30	CNPV*3617A**+UI	59*N*A060V17**14	25,600	14.1	19.0	750	750
4739582	24ANB124A**30	CNPV*3617A**+UI	59*N*A080V17**14	25,400	14.0	19.0	750	750
4645936	24ANB124A**30	CNPV*3621A**	58HDV040––12	25,400	13.7	19.0	755	590
4645937	24ANB124A**30	CNPV*3621A**	58HDV060––12	25,600	13.7	19.2	805	630
4645938	24ANB124A**30	CNPV*3621A**	58HDV080––20	26,000	14.0	19.5	900	715
4646149	24ANB124A**30	CNPV*3621A**	58MEB040–12	25,600	14.2	19.7	780	680
4646150	24ANB124A**30	CNPV*3621A**	58MEC060–12	25,600	14.2	19.7	790	650
4645930	24ANB124A**30	CNPV*3621A**	58UVB060–14	25,400	14.2	19.5	725	725
4645931	24ANB124A**30	CNPV*3621A**	58UVB080–14	25,600	14.0	19.0	820	820
4645932	24ANB124A**30	CNPV*3621A**	58UVB080–20	25,800	14.0	19.0	840	840
4645933	24ANB124A**30	CNPV*3621A**	58UVB100–20	25,600	14.0	19.0	800	800
4645940	24ANB124A**30	CNPV*3621A**	58VLR105–12	25,200	14.2	19.2	715	470
4645939	24ANB124A**30	CNPV*3621A**	58VMR105–12	25,600	14.0	19.2	800	485
4739546	24ANB124A**30	CNPV*3621A**	59*P5A060E17**14	25,600	13.8	19.3	915	715
4646176	24ANB124A**30	CNPV*3621A**	OVLAAB036098	25,800	13.7	19.2	865	530
4645941	24ANB124A**30	CNPV*3621A**	OVMAAB036098	25,200	14.0	19.2	725	550
4645942	24ANB124A**30	CNPV*3621A**	OVMAAB042112	26,000	14.2	19.7	875	785
4646102	24ANB124A**30	CNPV*3621A**+TDR		25,000	12.5	16.5	800	640
4645934	24ANB124A**30	CNPV*3621A**+UI	58CV(A,X)090–16	25,800	14.2	19.7	800	800
4645935	24ANB124A**30	CNPV*3621A**+UI	58CV(A,X)110–20	25,600	14.2	19.5	800	800
4645926	24ANB124A**30	CNPV*3621A**+UI	58MV(B,C)060–14	25,600	14.2	19.5	800	800
4645927	24ANB124A**30	CNPV*3621A**+UI	58MV(B,C)080–14	25,600	14.2	19.2	800	800
4645928	24ANB124A**30	CNPV*3621A**+UI	58MV(B,C)080–20	25,600	14.2	19.2	800	800
4645929	24ANB124A**30	CNPV*3621A**+UI	58MV(B,C)100–20	25,600	14.2	19.2	800	800
4739583	24ANB124A**30	CNPV*3621A**+UI	59*N*A060V17**14	25,600	14.1	19.0	750	750
4739584	24ANB124A**30	CNPV*3621A**+UI	59*N*A080V17**14	25,600	14.2	19.2	750	750
4739585	24ANB124A**30	CNPV*3621A**+UI	59*N*A100V21**20	25,600	14.2	19.2	750	750
4645947	24ANB124A**30	CNPV*3717A**	58HDV040––12	26,200	14.2	19.7	770	600
4645948	24ANB124A**30	CNPV*3717A**	58HDV060––12	26,400	14.2	19.7	830	650
4646151	24ANB124A**30	CNPV*3717A**	58MEB040–12	26,400	14.7	20.5	800	710
4646152	24ANB124A**30	CNPV*3717A**	58MEC060–12	26,600	14.7	20.2	810	680
4646123	24ANB124A**30	CNPV*3717A**	58PH*045–08	26,200	14.2	19.7	745	610
4645944	24ANB124A**30	CNPV*3717A**	58UVB060–14	26,000	14.7	20.2	725	725
4645950	24ANB124A**30	CNPV*3717A**	58VLR105–12	26,000	14.5	19.7	715	470
4645949	24ANB124A**30	CNPV*3717A**	58VMR105–12	26,400	14.5	19.7	800	485
4739547	24ANB124A**30	CNPV*3717A**	59*P5A040E14**10	26,400	13.5	19.3	805	545
4739548	24ANB124A**30	CNPV*3717A**	59*P5A060E17**14	26,600	14.3	20.0	930	735
4646177	24ANB124A**30	CNPV*3717A**	OVLAAB036098	26,600	14.2	19.7	865	530
4645951	24ANB124A**30	CNPV*3717A**	OVMAAB036098	26,000	14.2	20.0	725	550

See notes on page 33

COMBINATION RATINGS CONTINUED

AHRI Ref. Number	Model Number	Indoor Coil Model Number	Furnace Model Number	AHRI Standard Ratings – Cooling				
				Cooling Capacity	EER	SEER	ID CFM	
							High	Low
4645952	24ANB124A**30	CNPV*3717A**	OVMAAB042112	26,800	14.7	20.5	875	785
4646103	24ANB124A**30	CNPV*3717A**+TDR		25,800	12.9	17.0	800	640
4645945	24ANB124A**30	CNPV*3717A**+UI	58CV(A,X)070–12	26,400	14.7	20.0	800	800
4645946	24ANB124A**30	CNPV*3717A**+UI	58CV(A,X)090–16	26,600	14.7	20.2	800	800
4645943	24ANB124A**30	CNPV*3717A**+UI	58MV(B,C)060–14	26,400	14.7	20.2	800	800
4739586	24ANB124A**30	CNPV*3717A**+UI	59*N*A060V17**14	26,400	14.6	19.7	750	750
4739587	24ANB124A**30	CNPV*3717A**+UI	59*N*A080V17**14	26,200	14.5	19.7	750	750
4646040	24ANB124A**30	CSPH*2412A**	58HDV040––12	25,600	13.2	18.7	850	645
4646041	24ANB124A**30	CSPH*2412A**	58HDV060––12	25,200	13.5	18.7	735	565
4646042	24ANB124A**30	CSPH*2412A**	58HDV080––20	25,600	13.7	19.2	815	630
4646043	24ANB124A**30	CSPH*2412A**	58HDV100––20	25,600	13.7	19.2	760	575
4646161	24ANB124A**30	CSPH*2412A**	58MEB040–12	25,400	14.2	19.5	710	585
4646162	24ANB124A**30	CSPH*2412A**	58MEC060–12	25,400	14.0	19.5	725	545
4646128	24ANB124A**30	CSPH*2412A**	58PH*045–08	25,200	13.7	19.0	685	555
4646045	24ANB124A**30	CSPH*2412A**	58VLR105–12	25,400	14.0	19.2	715	470
4646044	24ANB124A**30	CSPH*2412A**	58VMR105–12	25,600	13.7	19.0	800	485
4739557	24ANB124A**30	CSPH*2412A**	59*P5A040E14**10	25,400	13.1	18.6	755	505
4739558	24ANB124A**30	CSPH*2412A**	59*P5A060E17**14	25,400	13.7	19.2	860	660
4646182	24ANB124A**30	CSPH*2412A**	OVLAAB036098	25,800	13.2	19.0	865	530
4646046	24ANB124A**30	CSPH*2412A**	OVMAAB036098	25,200	13.7	19.2	725	550
4646047	24ANB124A**30	CSPH*2412A**	OVMAAB042112	25,800	13.7	19.2	875	785
4646108	24ANB124A**30	CSPH*2412A**+TDR		25,200	12.7	16.7	800	640
4646035	24ANB124A**30	CSPH*2412A**+UI	58CV(A,X)070–12	25,800	14.0	19.0	800	800
4646036	24ANB124A**30	CSPH*2412A**+UI	58CV(A,X)090–16	25,800	14.2	19.2	800	800
4646037	24ANB124A**30	CSPH*2412A**+UI	58CV(A,X)110–20	25,600	14.0	19.0	800	800
4646038	24ANB124A**30	CSPH*2412A**+UI	58CV(A,X)135–22	25,800	14.2	19.2	800	800
4646039	24ANB124A**30	CSPH*2412A**+UI	58CV(A,X)155–22	25,800	14.2	19.2	800	800
4646030	24ANB124A**30	CSPH*2412A**+UI	58MV(B,C)060–14	25,800	14.0	19.2	800	800
4646031	24ANB124A**30	CSPH*2412A**+UI	58MV(B,C)080–14	25,600	13.7	18.7	800	800
4646032	24ANB124A**30	CSPH*2412A**+UI	58MV(B,C)080–20	25,600	13.7	18.7	800	800
4646033	24ANB124A**30	CSPH*2412A**+UI	58MV(B,C)100–20	25,600	14.0	19.0	800	800
4646034	24ANB124A**30	CSPH*2412A**+UI	58MV(B,C)120–20	25,800	14.0	19.0	800	800
4646029	24ANB124A**30	CSPH*2412A**+UI	58MVB040–14	25,600	14.0	18.7	800	800
4739601	24ANB124A**30	CSPH*2412A**+UI	59*N*A060V17**14	25,800	13.9	18.6	750	750
4739602	24ANB124A**30	CSPH*2412A**+UI	59*N*A080V17**14	25,600	13.7	18.7	750	750
4646059	24ANB124A**30	CSPH*3012A**	58HDV040––12	25,400	13.7	19.2	735	565
4646060	24ANB124A**30	CSPH*3012A**	58HDV060––12	25,600	13.7	19.2	780	605
4646061	24ANB124A**30	CSPH*3012A**	58HDV080––20	26,000	14.0	19.5	865	680
4646062	24ANB124A**30	CSPH*3012A**	58HDV100––20	25,800	14.0	19.7	815	625
4646163	24ANB124A**30	CSPH*3012A**	58MEB040–12	25,600	14.2	19.7	750	640
4646164	24ANB124A**30	CSPH*3012A**	58MEC060–12	25,800	14.2	19.7	765	605
4646129	24ANB124A**30	CSPH*3012A**	58PH*045–08	25,400	14.0	19.2	715	580
4646064	24ANB124A**30	CSPH*3012A**	58VLR105–12	25,400	14.2	19.2	715	470
4646063	24ANB124A**30	CSPH*3012A**	58VMR105–12	25,800	14.0	19.2	800	485
4739559	24ANB124A**30	CSPH*3012A**	59*P5A040E14**10	25,600	13.2	18.8	780	530
4739560	24ANB124A**30	CSPH*3012A**	59*P5A060E17**14	25,800	13.9	19.5	895	695
4646183	24ANB124A**30	CSPH*3012A**	OVLAAB036098	26,000	13.7	19.2	865	530
4646065	24ANB124A**30	CSPH*3012A**	OVMAAB036098	25,400	13.7	19.5	725	550
4646066	24ANB124A**30	CSPH*3012A**	OVMAAB042112	26,000	14.0	19.7	875	785
4646109	24ANB124A**30	CSPH*3012A**+TDR		25,200	12.7	16.7	800	640
4646054	24ANB124A**30	CSPH*3012A**+UI	58CV(A,X)070–12	25,800	14.2	19.5	800	800
4646055	24ANB124A**30	CSPH*3012A**+UI	58CV(A,X)090–16	25,800	14.2	19.7	800	800
4646056	24ANB124A**30	CSPH*3012A**+UI	58CV(A,X)110–20	25,800	14.2	19.5	800	800
4646057	24ANB124A**30	CSPH*3012A**+UI	58CV(A,X)135–22	25,800	14.2	19.7	800	800
4646058	24ANB124A**30	CSPH*3012A**+UI	58CV(A,X)155–22	25,800	14.5	19.7	800	800
4646049	24ANB124A**30	CSPH*3012A**+UI	58MV(B,C)060–14	25,800	14.2	19.5	800	800
4646050	24ANB124A**30	CSPH*3012A**+UI	58MV(B,C)080–14	25,800	14.0	19.2	800	800
4646051	24ANB124A**30	CSPH*3012A**+UI	58MV(B,C)080–20	25,800	14.0	19.2	800	800
4646052	24ANB124A**30	CSPH*3012A**+UI	58MV(B,C)100–20	25,800	14.2	19.2	800	800
4646053	24ANB124A**30	CSPH*3012A**+UI	58MV(B,C)120–20	25,800	14.2	19.5	800	800
4646048	24ANB124A**30	CSPH*3012A**+UI	58MVB040–14	25,800	14.2	19.2	800	800
4739603	24ANB124A**30	CSPH*3012A**+UI	59*N*A060V17**14	25,800	14.1	19.0	750	750
4739604	24ANB124A**30	CSPH*3012A**+UI	59*N*A080V17**14	25,800	14.0	19.2	750	750
4739605	24ANB124A**30	CSPH*3012A**+UI	59*N*A100V21**20	25,800	14.2	19.2	750	750
4646078	24ANB124A**30	CSPH*3612A**	58HDV040––12	25,800	14.0	19.2	755	580
4646079	24ANB124A**30	CSPH*3612A**	58HDV060––12	26,000	14.0	19.2	815	625
4646080	24ANB124A**30	CSPH*3612A**	58HDV080––20	26,600	14.2	19.7	910	715
4646081	24ANB124A**30	CSPH*3612A**	58HDV100––20	26,400	14.2	19.7	860	655
4646165	24ANB124A**30	CSPH*3612A**	58MEB040–12	26,000	14.5	20.0	780	675
4646166	24ANB124A**30	CSPH*3612A**	58MEC060–12	26,200	14.5	20.0	795	640
4646130	24ANB124A**30	CSPH*3612A**	58PH*045–08	25,800	14.2	19.5	735	590

See notes on page 33

COMBINATION RATINGS CONTINUED

AHRI Ref. Number	Model Number	Indoor Coil Model Number	Furnace Model Number	AHRI Standard Ratings – Cooling				
				Cooling Capacity	EER	SEER	ID CFM	
							High	Low
4646083	24ANB124A**30	CSPH*3612A**	58VLR105–12	25,800	14.2	19.5	715	470
4646082	24ANB124A**30	CSPH*3612A**	58VMR105–12	26,200	14.2	19.5	800	485
4739561	24ANB124A**30	CSPH*3612A**	59*P5A040E14**10	26,000	13.3	18.9	795	535
4739562	24ANB124A**30	CSPH*3612A**	59*P5A060E17**14	26,200	14.1	19.6	925	715
4646184	24ANB124A**30	CSPH*3612A**	OVLAAB036098	26,200	14.0	19.5	865	530
4646084	24ANB124A**30	CSPH*3612A**	OVMAAB036098	25,600	14.2	19.5	725	550
4646085	24ANB124A**30	CSPH*3612A**	OVMAAB042112	26,400	14.5	20.2	875	785
4646110	24ANB124A**30	CSPH*3612A**+TDR		25,600	12.7	17.0	800	640
4646073	24ANB124A**30	CSPH*3612A**+UI	58CV(A,X)070–12	26,200	14.5	19.7	800	800
4646074	24ANB124A**30	CSPH*3612A**+UI	58CV(A,X)090–16	26,200	14.7	20.0	800	800
4646075	24ANB124A**30	CSPH*3612A**+UI	58CV(A,X)110–20	26,200	14.5	20.0	800	800
4646076	24ANB124A**30	CSPH*3612A**+UI	58CV(A,X)135–22	26,200	14.7	20.2	800	800
4646077	24ANB124A**30	CSPH*3612A**+UI	58CV(A,X)155–22	26,200	14.7	20.2	800	800
4646068	24ANB124A**30	CSPH*3612A**+UI	58MV(B,C)060–14	26,200	14.5	19.7	800	800
4646069	24ANB124A**30	CSPH*3612A**+UI	58MV(B,C)080–14	26,200	14.2	19.5	800	800
4646070	24ANB124A**30	CSPH*3612A**+UI	58MV(B,C)080–20	26,200	14.2	19.5	800	800
4646071	24ANB124A**30	CSPH*3612A**+UI	58MV(B,C)100–20	26,200	14.5	19.7	800	800
4646072	24ANB124A**30	CSPH*3612A**+UI	58MV(B,C)120–20	26,200	14.5	19.7	800	800
4646067	24ANB124A**30	CSPH*3612A**+UI	58MVB040–14	26,200	14.5	19.7	800	800
4739606	24ANB124A**30	CSPH*3612A**+UI	59*N*A060V17**14	26,200	14.3	19.3	750	750
4739607	24ANB124A**30	CSPH*3612A**+UI	59*N*A080V17**14	26,200	14.2	19.5	750	750
4739608	24ANB124A**30	CSPH*3612A**+UI	59*N*A100V21**20	26,200	14.5	19.6	750	750
4739609	24ANB124A**30	CSPH*3612A**+UI	59*N*A120V24**22	26,200	14.5	19.7	750	750
4646087	24ANB124A**30	FE4AN(B,F)003+UI		25,800	14.5	20.2	800	800
4646086	24ANB124A**30	FE4ANF002+UI		25,800	14.2	19.7	800	800
4646186	24ANB124A**30	FV4CN(B,F)003		25,400	14.5	19.7	700	560
4646185	24ANB124A**30	FV4CNF002		25,200	14.2	19.7	700	560
4646187	24ANB136A**30	†FE5ANB004+UI		37,000	14.6	20.0	1,200	925
4646751	24ANB136A**30	CAP**3614A**	58PH*045–08	34,800	12.8	17.5	1,045	735
4646188	24ANB136A**30	CAP**3614A**+TDR		35,000	12.6	16.0	1,100	925
4646494	24ANB136A**30	CAP**3614A**+UI	58CV(A,X)070–12	35,400	13.1	18.0	1,120	860
4646195	24ANB136A**30	CAP**3617A**	58HDV040––12	34,800	12.5	17.2	1,055	815
4646196	24ANB136A**30	CAP**3617A**	58HDV060––12	35,400	12.2	17.0	1,250	995
4646673	24ANB136A**30	CAP**3617A**	58MEB040–12	35,400	13.6	18.5	1,065	800
4646193	24ANB136A**30	CAP**3617A**	58MEC060–12	35,800	13.0	18.0	1,250	970
4646750	24ANB136A**30	CAP**3617A**	58MEC080–12	35,400	13.5	18.2	1,055	775
4646194	24ANB136A**30	CAP**3617A**	58MEC080–16	35,600	13.3	18.0	1,200	990
4646191	24ANB136A**30	CAP**3617A**	58PH*045–08	35,000	12.7	16.2	1,075	1,075
4646192	24ANB136A**30	CAP**3617A**	58PH*070–16	35,400	12.6	17.5	1,245	935
4646190	24ANB136A**30	CAP**3617A**	58UVB060–14	35,800	13.2	18.2	1,240	870
4646197	24ANB136A**30	CAP**3617A**	58VLR105–12	35,200	13.2	17.9	1,065	610
4739679	24ANB136A**30	CAP**3617A**	59*P5A060E17**14	35,600	13.0	18.0	1,045	720
4739680	24ANB136A**30	CAP**3617A**	59*P5A080E17**16	35,600	13.3	17.7	1,035	965
4646769	24ANB136A**30	CAP**3617A**	OVMAAB042112	35,200	13.2	18.2	1,035	825
4646189	24ANB136A**30	CAP**3617A**+TDR		35,200	12.5	16.0	1,200	925
4646496	24ANB136A**30	CAP**3617A**+UI	58CV(A,X)070–12	35,600	13.0	18.0	1,120	860
4646497	24ANB136A**30	CAP**3617A**+UI	58CV(A,X)090–16	35,600	13.5	18.5	1,120	860
4646495	24ANB136A**30	CAP**3617A**+UI	58MV(B,C)060–14	35,600	13.2	18.2	1,120	860
4739610	24ANB136A**30	CAP**3617A**+UI	59*N*A060V17**14	35,600	12.8	17.7	1,120	860
4739611	24ANB136A**30	CAP**3617A**+UI	59*N*A080V17**14	35,400	13.0	18.0	1,120	860
4646303	24ANB136A**30	CAP**3619A**	58HDV040––12	34,800	12.7	17.2	1,055	815
4646746	24ANB136A**30	CAP**3619A**	58HDV060––12	35,400	13.0	17.7	1,100	785
4646298	24ANB136A**30	CAP**3619A**	58MEB040–12	35,800	13.0	18.2	1,255	950
4646299	24ANB136A**30	CAP**3619A**	58MEC060–12	35,800	13.0	18.0	1,250	970
4646300	24ANB136A**30	CAP**3619A**	58MEC080–12	35,800	13.0	18.0	1,240	935
4646301	24ANB136A**30	CAP**3619A**	58MEC080–16	35,600	13.0	18.0	1,200	990
4646302	24ANB136A**30	CAP**3619A**	58MEC100–20	35,800	13.2	18.2	1,205	1,035
4646295	24ANB136A**30	CAP**3619A**	58PH*070–16	35,400	12.2	17.5	1,245	935
4646296	24ANB136A**30	CAP**3619A**	58PH*090–16	35,600	13.2	18.0	1,190	940
4646297	24ANB136A**30	CAP**3619A**	58PH*110–20	35,800	13.2	18.0	1,185	1,095
4646291	24ANB136A**30	CAP**3619A**	58UVB060–14	35,800	13.0	18.2	1,240	870
4646292	24ANB136A**30	CAP**3619A**	58UVB080–14	35,400	12.7	18.0	1,195	820
4646293	24ANB136A**30	CAP**3619A**	58UVB080–20	35,600	13.0	18.0	1,200	840
4646294	24ANB136A**30	CAP**3619A**	58UVB100–20	35,400	13.0	18.0	1,145	800
4646305	24ANB136A**30	CAP**3619A**	58VLR120–20	35,600	13.2	18.2	1,170	675
4646304	24ANB136A**30	CAP**3619A**	58VMR120–20	35,600	13.2	17.7	1,155	640
4739689	24ANB136A**30	CAP**3619A**	59*P5A060E17**14	35,600	13.0	18.0	1,045	720
4739690	24ANB136A**30	CAP**3619A**	59*P5A080E17**16	35,600	13.0	17.7	1,035	965
4646759	24ANB136A**30	CAP**3619A**	OVLAAB048112	35,400	13.0	17.7	1,085	880
4646771	24ANB136A**30	CAP**3619A**	OVMAAB042112	35,200	13.2	18.2	1,035	825

See notes on page 33

COMBINATION RATINGS CONTINUED

AHRI Ref. Number	Model Number	Indoor Coil Model Number	Furnace Model Number	AHRI Standard Ratings – Cooling				
				Cooling Capacity	EER	SEER	ID CFM	
							High	Low
4646290	24ANB136A**30	CAP**3619A**+TDR		35,200	12.5	16.0	1,200	925
4646539	24ANB136A**30	CAP**3619A**+UI	58CV(A,X)090–16	35,600	13.2	18.5	1,120	860
4646540	24ANB136A**30	CAP**3619A**+UI	58CV(A,X)110–20	35,600	13.2	18.2	1,120	860
4646535	24ANB136A**30	CAP**3619A**+UI	58MV(B,C)060–14	35,600	13.2	18.2	1,120	860
4646536	24ANB136A**30	CAP**3619A**+UI	58MV(B,C)080–14	35,400	13.0	17.7	1,120	860
4646537	24ANB136A**30	CAP**3619A**+UI	58MV(B,C)080–20	35,600	13.2	18.0	1,120	860
4646538	24ANB136A**30	CAP**3619A**+UI	58MV(B,C)100–20	35,600	13.2	18.2	1,120	860
4739627	24ANB136A**30	CAP**3619A**+UI	59*N*A060V17**14	35,600	12.8	17.7	1,120	860
4739628	24ANB136A**30	CAP**3619A**+UI	59*N*A080V17**14	35,400	13.0	17.7	1,120	860
4739629	24ANB136A**30	CAP**3619A**+UI	59*N*A100V21**20	35,600	13.2	18.1	1,120	860
4646211	24ANB136A**30	CAP**3621A**	58HDV040––12	35,000	12.5	17.2	1,075	830
4646212	24ANB136A**30	CAP**3621A**	58HDV060––12	35,600	12.5	17.2	1,280	1,020
4646213	24ANB136A**30	CAP**3621A**	58HDV080––20	35,800	13.2	18.2	1,210	945
4646206	24ANB136A**30	CAP**3621A**	58MEB040–12	36,000	13.0	18.2	1,280	970
4646207	24ANB136A**30	CAP**3621A**	58MEC060–12	35,800	13.0	18.2	1,280	990
4646208	24ANB136A**30	CAP**3621A**	58MEC080–12	35,800	13.2	18.2	1,265	955
4646209	24ANB136A**30	CAP**3621A**	58MEC080–16	35,800	13.2	18.0	1,225	1,015
4646210	24ANB136A**30	CAP**3621A**	58MEC100–20	36,000	13.5	18.2	1,240	1,065
4646203	24ANB136A**30	CAP**3621A**	58PH*070–16	35,600	12.5	17.5	1,270	955
4646204	24ANB136A**30	CAP**3621A**	58PH*090–16	35,800	13.5	18.0	1,220	965
4646205	24ANB136A**30	CAP**3621A**	58PH*110–20	36,000	13.5	18.2	1,225	1,125
4646199	24ANB136A**30	CAP**3621A**	58UVB060–14	35,800	13.0	18.2	1,240	870
4646200	24ANB136A**30	CAP**3621A**	58UVB080–14	35,600	13.1	18.2	1,195	820
4646201	24ANB136A**30	CAP**3621A**	58UVB080–20	35,600	13.2	18.2	1,200	840
4646202	24ANB136A**30	CAP**3621A**	58UVB100–20	35,400	13.4	18.0	1,145	800
4646214	24ANB136A**30	CAP**3621A**	58VLR105–12	35,200	13.2	17.7	1,065	610
4646216	24ANB136A**30	CAP**3621A**	58VLR120–20	35,600	13.6	18.2	1,170	675
4646215	24ANB136A**30	CAP**3621A**	58VMR120–20	35,600	13.4	17.7	1,155	640
4739681	24ANB136A**30	CAP**3621A**	59*P5A060E17**14	35,600	13.0	18.2	1,065	740
4739682	24ANB136A**30	CAP**3621A**	59*P5A080E17**16	35,600	13.2	17.8	1,050	985
4646755	24ANB136A**30	CAP**3621A**	OVLAAB048112	35,400	13.2	18.0	1,085	880
4646735	24ANB136A**30	CAP**3621A**	OVMAAB042112	35,200	13.2	18.2	1,035	825
4646198	24ANB136A**30	CAP**3621A**+TDR		35,200	12.5	16.0	1,200	925
4646502	24ANB136A**30	CAP**3621A**+UI	58CV(A,X)090–16	35,800	13.5	18.5	1,120	860
4646503	24ANB136A**30	CAP**3621A**+UI	58CV(A,X)110–20	35,800	13.5	18.5	1,120	860
4646498	24ANB136A**30	CAP**3621A**+UI	58MV(B,C)060–14	35,600	13.2	18.2	1,120	860
4646499	24ANB136A**30	CAP**3621A**+UI	58MV(B,C)080–14	35,600	13.2	18.2	1,120	860
4646500	24ANB136A**30	CAP**3621A**+UI	58MV(B,C)080–20	35,600	13.2	18.2	1,120	860
4646501	24ANB136A**30	CAP**3621A**+UI	58MV(B,C)100–20	35,600	13.4	18.2	1,120	860
4739612	24ANB136A**30	CAP**3621A**+UI	59*N*A060V17**14	35,600	12.9	17.9	1,120	860
4739613	24ANB136A**30	CAP**3621A**+UI	59*N*A080V17**14	35,600	13.2	18.2	1,120	860
4739614	24ANB136A**30	CAP**3621A**+UI	59*N*A100V21**20	35,600	13.4	18.2	1,120	860
4646230	24ANB136A**30	CAP**4221A**	58HDV040––12	35,200	12.7	17.5	1,075	830
4646231	24ANB136A**30	CAP**4221A**	58HDV060––12	36,000	12.5	17.2	1,280	1,020
4646232	24ANB136A**30	CAP**4221A**	58HDV080––20	36,000	13.2	18.2	1,210	940
4646225	24ANB136A**30	CAP**4221A**	58MEB040–12	36,200	13.2	18.2	1,280	970
4646226	24ANB136A**30	CAP**4221A**	58MEC060–12	36,200	13.0	18.2	1,280	990
4646227	24ANB136A**30	CAP**4221A**	58MEC080–12	36,200	13.2	18.2	1,265	950
4646228	24ANB136A**30	CAP**4221A**	58MEC080–16	36,000	13.2	18.2	1,220	1,010
4646229	24ANB136A**30	CAP**4221A**	58MEC100–20	36,200	13.5	18.5	1,240	1,065
4646222	24ANB136A**30	CAP**4221A**	58PH*070–16	35,800	12.5	17.7	1,265	950
4646223	24ANB136A**30	CAP**4221A**	58PH*090–16	36,200	13.6	18.2	1,220	965
4646224	24ANB136A**30	CAP**4221A**	58PH*110–20	36,200	13.5	18.2	1,225	1,125
4646218	24ANB136A**30	CAP**4221A**	58UVB060–14	36,000	13.2	18.2	1,240	870
4646219	24ANB136A**30	CAP**4221A**	58UVB080–14	35,800	13.1	18.2	1,195	820
4646220	24ANB136A**30	CAP**4221A**	58UVB080–20	35,800	13.3	18.2	1,200	840
4646221	24ANB136A**30	CAP**4221A**	58UVB100–20	35,800	13.4	18.0	1,145	1,040
4646233	24ANB136A**30	CAP**4221A**	58VLR105–12	35,400	13.2	18.0	1,065	610
4646235	24ANB136A**30	CAP**4221A**	58VLR120–20	36,000	13.7	18.5	1,170	675
4646234	24ANB136A**30	CAP**4221A**	58VMR120–20	35,800	13.5	17.8	1,155	640
4739683	24ANB136A**30	CAP**4221A**	59*P5A060E17**14	35,800	13.0	18.2	1,060	735
4739684	24ANB136A**30	CAP**4221A**	59*P5A080E17**16	36,000	13.2	17.9	1,050	980
4646756	24ANB136A**30	CAP**4221A**	OVLAAB048112	35,600	13.2	18.0	1,085	880
4646236	24ANB136A**30	CAP**4221A**	OVMAAB042112	35,800	13.2	18.2	1,205	960
4646217	24ANB136A**30	CAP**4221A**+TDR		35,600	12.6	16.0	1,200	925
4646508	24ANB136A**30	CAP**4221A**+UI	58CV(A,X)090–16	36,000	13.5	18.7	1,120	860
4646509	24ANB136A**30	CAP**4221A**+UI	58CV(A,X)110–20	36,000	13.6	18.7	1,120	860
4646504	24ANB136A**30	CAP**4221A**+UI	58MV(B,C)060–14	36,000	13.5	18.7	1,120	860
4646505	24ANB136A**30	CAP**4221A**+UI	58MV(B,C)080–14	35,800	13.2	18.2	1,120	860
4646506	24ANB136A**30	CAP**4221A**+UI	58MV(B,C)080–20	35,800	13.3	18.2	1,120	860
4646507	24ANB136A**30	CAP**4221A**+UI	58MV(B,C)100–20	35,800	13.4	18.2	1,120	860

See notes on page 33

COMBINATION RATINGS CONTINUED

AHRI Ref. Number	Model Number	Indoor Coil Model Number	Furnace Model Number	AHRI Standard Ratings – Cooling				
				Cooling Capacity	EER	SEER	ID CFM	
							High	Low
4739615	24ANB136A**30	CAP**4221A**+UI	59*N*A060V17**14	36,000	13.0	18.0	1,120	860
4739616	24ANB136A**30	CAP**4221A**+UI	59*N*A080V17**14	35,800	13.2	18.2	1,120	860
4739617	24ANB136A**30	CAP**4221A**+UI	59*N*A100V21**20	35,800	13.4	18.2	1,120	860
4646245	24ANB136A**30	CAP**4224A**	58HDV080––20	36,000	13.2	18.2	1,220	950
4646246	24ANB136A**30	CAP**4224A**	58HDV100––20	36,200	13.2	18.2	1,255	995
4646244	24ANB136A**30	CAP**4224A**	58MEC100–20	36,200	13.5	18.5	1,250	1,075
4646242	24ANB136A**30	CAP**4224A**	58PH*090–16	36,200	13.5	18.2	1,230	975
4646243	24ANB136A**30	CAP**4224A**	58PH*110–20	36,200	13.5	18.2	1,240	1,135
4646238	24ANB136A**30	CAP**4224A**	58UVB080–14	35,800	13.0	17.7	1,195	1,030
4646239	24ANB136A**30	CAP**4224A**	58UVB080–20	36,000	13.2	18.2	1,200	840
4646240	24ANB136A**30	CAP**4224A**	58UVB100–20	35,800	13.2	18.2	1,145	800
4646241	24ANB136A**30	CAP**4224A**	58UVB120–20	36,000	13.6	18.5	1,175	845
4646248	24ANB136A**30	CAP**4224A**	58VLR120–20	36,000	13.5	18.5	1,170	675
4646247	24ANB136A**30	CAP**4224A**	58VMR120–20	35,800	13.2	17.7	1,155	640
4646757	24ANB136A**30	CAP**4224A**	OVLAAB048112	35,600	13.2	18.2	1,085	880
4646249	24ANB136A**30	CAP**4224A**	OVLAAB060154	36,200	13.7	18.7	1,250	1,020
4646237	24ANB136A**30	CAP**4224A**+TDR		35,600	12.6	16.0	1,200	925
4646515	24ANB136A**30	CAP**4224A**+UI	58CV(A,X)110–20	36,000	13.7	18.7	1,120	860
4646516	24ANB136A**30	CAP**4224A**+UI	58CV(A,X)135–22	36,000	13.8	18.7	1,120	860
4646517	24ANB136A**30	CAP**4224A**+UI	58CV(A,X)155–22	36,000	13.9	19.0	1,120	860
4646511	24ANB136A**30	CAP**4224A**+UI	58MV(B,C)080–14	35,800	13.2	18.2	1,120	860
4646512	24ANB136A**30	CAP**4224A**+UI	58MV(B,C)080–20	35,800	13.2	18.2	1,120	860
4646513	24ANB136A**30	CAP**4224A**+UI	58MV(B,C)100–20	36,000	13.5	18.2	1,120	860
4646514	24ANB136A**30	CAP**4224A**+UI	58MV(B,C)120–20	36,000	13.6	18.5	1,120	860
4646510	24ANB136A**30	CAP**4224A**+UI	58MVB040–14	35,800	13.3	18.5	1,120	860
4739618	24ANB136A**30	CAP**4224A**+UI	59*N*A100V21**20	36,000	13.5	18.2	1,120	860
4739619	24ANB136A**30	CAP**4224A**+UI	59*N*A120V24**22	36,000	13.6	18.5	1,120	860
4646258	24ANB136A**30	CAP**4817A**	58HDV040––12	36,000	13.0	17.7	1,060	820
4646259	24ANB136A**30	CAP**4817A**	58HDV060––12	36,800	13.0	17.5	1,255	1,000
4646254	24ANB136A**30	CAP**4817A**	58MEB040–12	37,000	13.6	18.7	1,255	955
4646255	24ANB136A**30	CAP**4817A**	58MEC060–12	37,000	13.2	18.7	1,255	975
4646256	24ANB136A**30	CAP**4817A**	58MEC080–12	37,000	13.7	18.7	1,245	940
4646257	24ANB136A**30	CAP**4817A**	58MEC080–16	36,800	13.7	18.5	1,200	995
4646252	24ANB136A**30	CAP**4817A**	58PH*045–08	36,200	13.0	18.2	1,075	755
4646253	24ANB136A**30	CAP**4817A**	58PH*070–16	36,800	13.0	18.0	1,245	940
4646251	24ANB136A**30	CAP**4817A**	58UVB060–14	37,000	13.6	18.7	1,240	870
4646260	24ANB136A**30	CAP**4817A**	58VLR105–12	36,200	13.5	18.2	1,065	610
4739685	24ANB136A**30	CAP**4817A**	59*P5A060E17**14	36,600	13.2	18.6	1,050	725
4739686	24ANB136A**30	CAP**4817A**	59*P5A080E17**16	36,800	13.7	18.2	1,040	970
4646770	24ANB136A**30	CAP**4817A**	OVMAAB042112	36,200	13.5	18.7	1,035	825
4646250	24ANB136A**30	CAP**4817A**+TDR		36,600	12.9	16.5	1,200	925
4646519	24ANB136A**30	CAP**4817A**+UI	58CV(A,X)070–12	36,600	13.3	18.7	1,120	860
4646520	24ANB136A**30	CAP**4817A**+UI	58CV(A,X)090–16	36,800	13.8	19.0	1,120	860
4646518	24ANB136A**30	CAP**4817A**+UI	58MV(B,C)060–14	36,800	13.7	18.7	1,120	860
4739620	24ANB136A**30	CAP**4817A**+UI	59*N*A060V17**14	36,800	13.2	18.3	1,120	860
4739621	24ANB136A**30	CAP**4817A**+UI	59*N*A080V17**14	36,600	13.2	18.2	1,120	860
4646270	24ANB136A**30	CAP**4821A**	58HDV040––12	35,800	13.0	17.7	1,070	825
4646271	24ANB136A**30	CAP**4821A**	58HDV060––12	36,400	12.7	17.5	1,270	1,015
4646272	24ANB136A**30	CAP**4821A**	58HDV080––20	36,600	13.2	18.5	1,200	935
4646265	24ANB136A**30	CAP**4821A**	58MEB040–12	36,800	13.2	18.7	1,270	965
4646266	24ANB136A**30	CAP**4821A**	58MEC060–12	36,800	13.2	18.5	1,270	985
4646267	24ANB136A**30	CAP**4821A**	58MEC080–12	36,800	13.2	18.5	1,255	945
4646268	24ANB136A**30	CAP**4821A**	58MEC080–16	36,600	13.2	18.2	1,215	1,005
4646269	24ANB136A**30	CAP**4821A**	58MEC100–20	36,800	13.7	18.7	1,225	1,055
4646262	24ANB136A**30	CAP**4821A**	58PH*070–16	36,400	13.0	17.7	1,260	945
4646263	24ANB136A**30	CAP**4821A**	58PH*090–16	36,600	13.8	18.5	1,210	955
4646264	24ANB136A**30	CAP**4821A**	58PH*110–20	36,800	13.7	18.5	1,210	1,115
4646752	24ANB136A**30	CAP**4821A**	58UVB060–14	36,200	13.6	18.7	1,055	870
4646753	24ANB136A**30	CAP**4821A**	58UVB080–14	36,400	13.3	18.5	1,195	820
4646261	24ANB136A**30	CAP**4821A**	58UVB080–20	36,400	13.5	18.0	1,200	1,010
4646754	24ANB136A**30	CAP**4821A**	58UVB100–20	36,400	13.6	18.5	1,145	800
4646273	24ANB136A**30	CAP**4821A**	58VLR105–12	36,000	13.5	18.2	1,065	610
4646275	24ANB136A**30	CAP**4821A**	58VLR120–20	36,600	13.5	18.7	1,170	675
4646274	24ANB136A**30	CAP**4821A**	58VMR120–20	36,400	13.5	18.0	1,155	640
4739687	24ANB136A**30	CAP**4821A**	59*P5A060E17**14	36,400	13.2	18.5	1,055	730
4739688	24ANB136A**30	CAP**4821A**	59*P5A080E17**16	36,400	13.2	18.1	1,045	980
4646758	24ANB136A**30	CAP**4821A**	OVLAAB048112	36,200	13.2	18.2	1,085	880
4646736	24ANB136A**30	CAP**4821A**	OVMAAB042112	36,000	13.5	18.5	1,035	825
4646740	24ANB136A**30	CAP**4821A**+TDR		35,800	12.8	16.5	1,050	840
4646525	24ANB136A**30	CAP**4821A**+UI	58CV(A,X)090–16	36,600	13.8	18.7	1,120	860
4646526	24ANB136A**30	CAP**4821A**+UI	58CV(A,X)110–20	36,600	13.8	19.0	1,120	860

See notes on page 33

COMBINATION RATINGS CONTINUED

AHRI Ref. Number	Model Number	Indoor Coil Model Number	Furnace Model Number	AHRI Standard Ratings – Cooling				
				Cooling Capacity	EER	SEER	ID CFM	
							High	Low
4646521	24ANB136A**30	CAP**4821A**+UI	58MV(B,C)060–14	36,600	13.7	18.7	1,120	860
4646522	24ANB136A**30	CAP**4821A**+UI	58MV(B,C)080–14	36,400	13.3	18.5	1,120	860
4646523	24ANB136A**30	CAP**4821A**+UI	58MV(B,C)080–20	36,400	13.5	18.5	1,120	860
4646524	24ANB136A**30	CAP**4821A**+UI	58MV(B,C)100–20	36,400	13.6	18.5	1,120	860
4739622	24ANB136A**30	CAP**4821A**+UI	59*N*A060V17**14	36,600	13.2	18.2	1,120	860
4739623	24ANB136A**30	CAP**4821A**+UI	59*N*A080V17**14	36,400	13.3	18.5	1,120	860
4739624	24ANB136A**30	CAP**4821A**+UI	59*N*A100V21**20	36,400	13.6	18.5	1,120	860
4646313	24ANB136A**30	CAP**4823A**	58HDV040––12	35,800	13.0	17.7	1,070	825
4646314	24ANB136A**30	CAP**4823A**	58HDV060––12	36,400	12.7	17.5	1,270	1,015
4646315	24ANB136A**30	CAP**4823A**	58HDV080––20	36,600	13.6	18.5	1,200	935
4646316	24ANB136A**30	CAP**4823A**	58HDV100––20	36,800	13.2	18.5	1,235	980
4646312	24ANB136A**30	CAP**4823A**	58MEC100–20	36,800	13.7	18.7	1,225	1,055
4646310	24ANB136A**30	CAP**4823A**	58PH*090–16	36,600	13.5	18.5	1,210	955
4646311	24ANB136A**30	CAP**4823A**	58PH*110–20	36,800	13.7	18.5	1,210	1,115
4646306	24ANB136A**30	CAP**4823A**	58UVB080–14	36,400	13.0	17.7	1,195	1,030
4646307	24ANB136A**30	CAP**4823A**	58UVB080–20	36,400	13.2	18.5	1,200	840
4646308	24ANB136A**30	CAP**4823A**	58UVB100–20	36,400	13.2	18.2	1,145	800
4646309	24ANB136A**30	CAP**4823A**	58UVB120–20	36,600	13.5	18.7	1,175	845
4646318	24ANB136A**30	CAP**4823A**	58VLR120–20	36,600	13.5	18.7	1,170	675
4646317	24ANB136A**30	CAP**4823A**	58VMR120–20	36,400	13.5	18.0	1,155	640
4646760	24ANB136A**30	CAP**4823A**	OVLAAB048112	36,200	13.2	18.2	1,085	880
4646741	24ANB136A**30	CAP**4823A**+TDR		35,800	12.8	16.5	1,050	840
4646546	24ANB136A**30	CAP**4823A**+UI	58CV(A,X)110–20	36,600	13.7	18.7	1,120	860
4646547	24ANB136A**30	CAP**4823A**+UI	58CV(A,X)135–22	36,600	13.7	19.0	1,120	860
4646548	24ANB136A**30	CAP**4823A**+UI	58CV(A,X)155–22	36,600	14.0	19.2	1,120	860
4646542	24ANB136A**30	CAP**4823A**+UI	58MV(B,C)080–14	36,400	13.2	18.5	1,120	860
4646543	24ANB136A**30	CAP**4823A**+UI	58MV(B,C)080–20	36,400	13.5	18.7	1,120	860
4646544	24ANB136A**30	CAP**4823A**+UI	58MV(B,C)100–20	36,400	13.5	18.7	1,120	860
4646545	24ANB136A**30	CAP**4823A**+UI	58MV(B,C)120–20	36,600	13.7	18.7	1,120	860
4646541	24ANB136A**30	CAP**4823A**+UI	58MVB040–14	36,400	13.5	18.7	1,120	860
4739630	24ANB136A**30	CAP**4823A**+UI	59*N*A100V21**20	36,400	13.5	18.6	1,120	860
4739631	24ANB136A**30	CAP**4823A**+UI	59*N*A120V24**22	36,600	13.7	18.7	1,120	860
4646284	24ANB136A**30	CAP**4824A**	58HDV080––20	36,600	13.5	18.5	1,215	950
4646285	24ANB136A**30	CAP**4824A**	58HDV100––20	36,800	13.5	18.5	1,250	995
4646283	24ANB136A**30	CAP**4824A**	58MEC100–20	36,800	13.7	18.7	1,245	1,070
4646281	24ANB136A**30	CAP**4824A**	58PH*090–16	36,800	13.7	18.5	1,225	970
4646282	24ANB136A**30	CAP**4824A**	58PH*110–20	36,800	13.7	18.5	1,235	1,135
4646277	24ANB136A**30	CAP**4824A**	58UVB080–14	36,400	13.4	18.2	1,195	1,030
4646278	24ANB136A**30	CAP**4824A**	58UVB080–20	36,600	13.2	18.5	1,200	840
4646279	24ANB136A**30	CAP**4824A**	58UVB100–20	36,400	13.2	18.2	1,145	1,040
4646280	24ANB136A**30	CAP**4824A**	58UVB120–20	36,600	13.5	18.5	1,175	1,010
4646287	24ANB136A**30	CAP**4824A**	58VLR120–20	36,600	13.7	18.7	1,170	675
4646286	24ANB136A**30	CAP**4824A**	58VMR120–20	36,400	13.5	18.0	1,155	640
4646288	24ANB136A**30	CAP**4824A**	OVLAAB048112	36,600	13.2	18.2	1,285	1,010
4646289	24ANB136A**30	CAP**4824A**	OVLAAB060154	36,800	13.7	19.0	1,250	1,020
4646276	24ANB136A**30	CAP**4824A**+TDR		36,200	12.8	16.4	1,200	925
4646532	24ANB136A**30	CAP**4824A**+UI	58CV(A,X)110–20	36,600	13.8	19.0	1,120	860
4646533	24ANB136A**30	CAP**4824A**+UI	58CV(A,X)135–22	36,600	14.0	19.0	1,120	860
4646534	24ANB136A**30	CAP**4824A**+UI	58CV(A,X)155–22	36,600	14.1	19.2	1,120	860
4646528	24ANB136A**30	CAP**4824A**+UI	58MV(B,C)080–14	36,400	13.5	18.5	1,120	860
4646529	24ANB136A**30	CAP**4824A**+UI	58MV(B,C)080–20	36,400	13.5	18.5	1,120	860
4646530	24ANB136A**30	CAP**4824A**+UI	58MV(B,C)100–20	36,400	13.7	18.7	1,120	860
4646531	24ANB136A**30	CAP**4824A**+UI	58MV(B,C)120–20	36,600	13.8	18.7	1,120	860
4646527	24ANB136A**30	CAP**4824A**+UI	58MVB040–14	36,400	13.5	18.7	1,120	860
4739625	24ANB136A**30	CAP**4824A**+UI	59*N*A100V21**20	36,400	13.7	18.7	1,120	860
4739626	24ANB136A**30	CAP**4824A**+UI	59*N*A120V24**22	36,600	13.8	18.7	1,120	860
4646398	24ANB136A**30	CNPH*3617A**	58HDV060––12	35,400	12.2	17.0	1,225	975
4646399	24ANB136A**30	CNPH*3617A**	58HDV080––20	35,400	13.2	18.0	1,155	900
4646400	24ANB136A**30	CNPH*3617A**	58HDV100––20	35,600	13.2	18.0	1,185	940
4646689	24ANB136A**30	CNPH*3617A**	58MEB040–12	35,200	13.5	18.4	1,045	785
4646395	24ANB136A**30	CNPH*3617A**	58MEC060–12	35,600	13.0	18.0	1,220	950
4646698	24ANB136A**30	CNPH*3617A**	58MEC080–12	35,200	13.5	18.0	1,035	905
4646396	24ANB136A**30	CNPH*3617A**	58MEC080–16	35,400	13.2	18.0	1,170	970
4646397	24ANB136A**30	CNPH*3617A**	58MEC100–20	35,600	13.2	18.0	1,175	1,010
4646392	24ANB136A**30	CNPH*3617A**	58PH*045–08	34,800	12.5	17.5	1,055	740
4646781	24ANB136A**30	CNPH*3617A**	58PH*070–16	35,000	13.1	17.6	1,030	905
4646393	24ANB136A**30	CNPH*3617A**	58PH*090–16	35,600	13.4	17.7	1,165	920
4646394	24ANB136A**30	CNPH*3617A**	58PH*110–20	35,600	13.2	17.7	1,150	1,065
4646401	24ANB136A**30	CNPH*3617A**	58VLR105–12	35,000	13.1	17.8	1,065	610
4646403	24ANB136A**30	CNPH*3617A**	58VLR120–20	35,600	13.3	18.0	1,170	675
4646402	24ANB136A**30	CNPH*3617A**	58VMR120–20	35,400	13.2	17.6	1,155	640

See notes on page 33

COMBINATION RATINGS CONTINUED

AHRI Ref. Number	Model Number	Indoor Coil Model Number	Furnace Model Number	AHRI Standard Ratings – Cooling				
				Cooling Capacity	EER	SEER	ID CFM	
							High	Low
4739703	24ANB136A**30	CNPH*3617A**	59*P5A060E17**14	35,400	13.0	17.9	1,030	710
4739704	24ANB136A**30	CNPH*3617A**	59*P5A080E17**16	35,400	13.2	17.6	1,020	955
4646764	24ANB136A**30	CNPH*3617A**	OVLAAB048112	35,200	13.0	17.5	1,085	880
4646404	24ANB136A**30	CNPH*3617A**	OVLAAB060154	35,800	13.2	18.2	1,250	1,020
4646776	24ANB136A**30	CNPH*3617A**	OVMAAB042112	35,000	13.0	18.0	1,035	825
4646391	24ANB136A**30	CNPH*3617A**+TDR		35,200	12.5	16.0	1,200	925
4646598	24ANB136A**30	CNPH*3617A**+UI	58CV(A,X)070–12	35,400	13.0	18.0	1,120	860
4646599	24ANB136A**30	CNPH*3617A**+UI	58CV(A,X)090–16	35,600	13.4	18.2	1,120	860
4646600	24ANB136A**30	CNPH*3617A**+UI	58CV(A,X)110–20	35,600	13.2	18.2	1,120	860
4646601	24ANB136A**30	CNPH*3617A**+UI	58CV(A,X)135–22	35,600	13.3	18.2	1,120	860
4646602	24ANB136A**30	CNPH*3617A**+UI	58CV(A,X)155–22	35,600	13.5	18.5	1,120	860
4646593	24ANB136A**30	CNPH*3617A**+UI	58MV(B,C)060–14	35,600	13.2	18.2	1,120	860
4646594	24ANB136A**30	CNPH*3617A**+UI	58MV(B,C)080–14	35,400	13.0	18.0	1,120	860
4646595	24ANB136A**30	CNPH*3617A**+UI	58MV(B,C)080–20	35,400	13.0	18.0	1,120	860
4646596	24ANB136A**30	CNPH*3617A**+UI	58MV(B,C)100–20	35,600	13.0	18.0	1,120	860
4646597	24ANB136A**30	CNPH*3617A**+UI	58MV(B,C)120–20	35,600	13.2	18.2	1,120	860
4646592	24ANB136A**30	CNPH*3617A**+UI	58MVB040–14	35,400	13.0	18.0	1,120	860
4739651	24ANB136A**30	CNPH*3617A**+UI	59*N*A060V17**14	35,600	12.7	17.6	1,120	860
4739652	24ANB136A**30	CNPH*3617A**+UI	59*N*A080V17**14	35,400	13.0	17.9	1,120	860
4739653	24ANB136A**30	CNPH*3617A**+UI	59*N*A100V21**20	35,600	13.0	18.0	1,120	860
4739654	24ANB136A**30	CNPH*3617A**+UI	59*N*A120V24**22	35,600	13.2	18.2	1,120	860
4646411	24ANB136A**30	CNPH*4221A**	58HDV040––12	35,200	12.7	17.5	1,055	815
4646412	24ANB136A**30	CNPH*4221A**	58HDV060––12	35,400	13.0	17.7	1,095	775
4646677	24ANB136A**30	CNPH*4221A**	58HDV080––20	35,400	13.5	18.5	980	785
4646413	24ANB136A**30	CNPH*4221A**	58HDV100––20	36,000	13.2	18.2	1,215	955
4646690	24ANB136A**30	CNPH*4221A**	58MEB040–12	35,800	13.7	18.7	1,065	795
4646409	24ANB136A**30	CNPH*4221A**	58MEC060–12	36,200	13.0	18.2	1,250	965
4646699	24ANB136A**30	CNPH*4221A**	58MEC080–12	35,800	13.5	18.5	1,055	920
4646704	24ANB136A**30	CNPH*4221A**	58MEC080–16	35,800	13.6	18.3	1,075	980
4646410	24ANB136A**30	CNPH*4221A**	58MEC100–20	36,200	13.5	18.2	1,205	1,035
4646406	24ANB136A**30	CNPH*4221A**	58PH*045–08	35,200	13.0	17.7	1,070	745
4646782	24ANB136A**30	CNPH*4221A**	58PH*070–16	35,400	13.3	17.8	1,045	915
4646407	24ANB136A**30	CNPH*4221A**	58PH*090–16	36,000	13.6	18.3	1,190	935
4646408	24ANB136A**30	CNPH*4221A**	58PH*110–20	36,200	13.5	18.2	1,185	1,090
4646414	24ANB136A**30	CNPH*4221A**	58VLR105–12	35,400	13.4	17.7	1,065	610
4646416	24ANB136A**30	CNPH*4221A**	58VLR120–20	36,000	13.6	18.2	1,170	675
4646415	24ANB136A**30	CNPH*4221A**	58VMR120–20	36,000	13.5	18.0	1,155	640
4739705	24ANB136A**30	CNPH*4221A**	59*P5A060E17**14	35,800	13.0	18.2	1,045	715
4739706	24ANB136A**30	CNPH*4221A**	59*P5A080E17**16	35,800	13.4	17.8	1,030	965
4646765	24ANB136A**30	CNPH*4221A**	OVLAAB048112	35,600	13.0	18.0	1,085	880
4646417	24ANB136A**30	CNPH*4221A**	OVLAAB060154	36,400	13.5	18.5	1,250	1,020
4646777	24ANB136A**30	CNPH*4221A**	OVMAAB042112	35,600	13.2	18.2	1,035	825
4646405	24ANB136A**30	CNPH*4221A**+TDR		35,600	12.6	16.0	1,200	925
4646609	24ANB136A**30	CNPH*4221A**+UI	58CV(A,X)070–12	35,800	13.4	18.2	1,120	860
4646610	24ANB136A**30	CNPH*4221A**+UI	58CV(A,X)090–16	36,000	13.7	18.8	1,120	860
4646611	24ANB136A**30	CNPH*4221A**+UI	58CV(A,X)110–20	36,000	13.6	18.7	1,120	860
4646612	24ANB136A**30	CNPH*4221A**+UI	58CV(A,X)135–22	36,000	13.9	18.9	1,120	860
4646613	24ANB136A**30	CNPH*4221A**+UI	58CV(A,X)155–22	36,200	14.0	19.0	1,120	860
4646604	24ANB136A**30	CNPH*4221A**+UI	58MV(B,C)060–14	36,000	13.6	18.5	1,120	860
4646605	24ANB136A**30	CNPH*4221A**+UI	58MV(B,C)080–14	35,800	13.3	18.4	1,120	860
4646606	24ANB136A**30	CNPH*4221A**+UI	58MV(B,C)080–20	36,000	13.5	18.4	1,120	860
4646607	24ANB136A**30	CNPH*4221A**+UI	58MV(B,C)100–20	36,000	13.6	18.5	1,120	860
4646608	24ANB136A**30	CNPH*4221A**+UI	58MV(B,C)120–20	36,000	13.7	18.7	1,120	860
4646603	24ANB136A**30	CNPH*4221A**+UI	58MVB040–14	36,000	13.5	18.5	1,120	860
4739655	24ANB136A**30	CNPH*4221A**+UI	59*N*A060V17**14	36,000	12.9	17.8	1,120	860
4739656	24ANB136A**30	CNPH*4221A**+UI	59*N*A080V17**14	35,800	13.2	18.2	1,120	860
4739657	24ANB136A**30	CNPH*4221A**+UI	59*N*A100V21**20	36,000	13.4	18.3	1,120	860
4739658	24ANB136A**30	CNPH*4221A**+UI	59*N*A120V24**22	36,000	13.6	18.5	1,120	860
4646426	24ANB136A**30	CNPH*4321A**	58HDV040––12	36,400	13.0	18.0	1,075	835
4646427	24ANB136A**30	CNPH*4321A**	58HDV060––12	37,200	13.0	17.7	1,280	1,025
4646428	24ANB136A**30	CNPH*4321A**	58HDV080––20	37,200	13.7	18.7	1,210	945
4646429	24ANB136A**30	CNPH*4321A**	58HDV100––20	37,000	13.7	18.7	1,245	990
4646691	24ANB136A**30	CNPH*4321A**	58MEB040–12	37,000	14.1	19.3	1,085	815
4646422	24ANB136A**30	CNPH*4321A**	58MEC060–12	37,000	13.5	18.7	1,280	990
4646423	24ANB136A**30	CNPH*4321A**	58MEC080–12	37,000	13.5	18.7	1,265	955
4646424	24ANB136A**30	CNPH*4321A**	58MEC080–16	37,200	13.7	18.7	1,225	1,015
4646425	24ANB136A**30	CNPH*4321A**	58MEC100–20	37,000	13.7	19.0	1,240	1,065
4646419	24ANB136A**30	CNPH*4321A**	58PH*045–08	36,400	13.0	18.2	1,095	765
4646783	24ANB136A**30	CNPH*4321A**	58PH*070–16	36,600	13.7	18.4	1,070	940
4646420	24ANB136A**30	CNPH*4321A**	58PH*090–16	37,400	13.7	18.7	1,220	970
4646421	24ANB136A**30	CNPH*4321A**	58PH*110–20	37,000	14.0	18.7	1,225	1,125

See notes on page 33

COMBINATION RATINGS CONTINUED

AHRI Ref. Number	Model Number	Indoor Coil Model Number	Furnace Model Number	AHRI Standard Ratings – Cooling				
				Cooling Capacity	EER	SEER	ID CFM	
							High	Low
4646430	24ANB136A**30	CNPH*4321A**	58VLR105–12	36,600	13.8	18.2	1,065	610
4646432	24ANB136A**30	CNPH*4321A**	58VLR120–20	37,200	13.7	19.0	1,170	675
4646431	24ANB136A**30	CNPH*4321A**	58VMR120–20	37,000	14.0	18.5	1,155	640
4739707	24ANB136A**30	CNPH*4321A**	59*P5A060E17**14	37,000	13.5	18.7	1,065	740
4739708	24ANB136A**30	CNPH*4321A**	59*P5A080E17**16	37,000	13.7	18.4	1,050	985
4646766	24ANB136A**30	CNPH*4321A**	OVLAAB048112	36,800	13.5	18.7	1,085	880
4646434	24ANB136A**30	CNPH*4321A**	OVLAAB060154	37,000	14.0	19.2	1,250	1,020
4646433	24ANB136A**30	CNPH*4321A**	OVMAAB042112	37,000	13.5	18.7	1,205	960
4646418	24ANB136A**30	CNPH*4321A**+TDR		36,800	12.8	16.5	1,200	925
4646620	24ANB136A**30	CNPH*4321A**+UI	58CV(A,X)070–12	37,000	13.5	18.7	1,120	860
4646621	24ANB136A**30	CNPH*4321A**+UI	58CV(A,X)090–16	37,200	14.0	19.2	1,120	860
4646622	24ANB136A**30	CNPH*4321A**+UI	58CV(A,X)110–20	37,200	14.0	19.2	1,120	860
4646623	24ANB136A**30	CNPH*4321A**+UI	58CV(A,X)135–22	37,200	14.2	19.2	1,120	860
4646624	24ANB136A**30	CNPH*4321A**+UI	58CV(A,X)155–22	37,200	14.2	19.5	1,120	860
4646615	24ANB136A**30	CNPH*4321A**+UI	58MV(B,C)060–14	37,000	13.9	19.0	1,120	860
4646616	24ANB136A**30	CNPH*4321A**+UI	58MV(B,C)080–14	37,000	13.7	19.0	1,120	860
4646617	24ANB136A**30	CNPH*4321A**+UI	58MV(B,C)080–20	37,000	13.9	19.0	1,120	860
4646618	24ANB136A**30	CNPH*4321A**+UI	58MV(B,C)100–20	37,000	13.8	19.0	1,120	860
4646619	24ANB136A**30	CNPH*4321A**+UI	58MV(B,C)120–20	37,200	14.0	19.0	1,120	860
4646614	24ANB136A**30	CNPH*4321A**+UI	58MVB040–14	37,000	13.7	19.0	1,120	860
4739659	24ANB136A**30	CNPH*4321A**+UI	59*N*A060V17**14	37,000	13.4	18.5	1,120	860
4739660	24ANB136A**30	CNPH*4321A**+UI	59*N*A080V17**14	37,000	13.7	18.8	1,120	860
4739661	24ANB136A**30	CNPH*4321A**+UI	59*N*A100V21**20	37,000	13.8	18.9	1,120	860
4739662	24ANB136A**30	CNPH*4321A**+UI	59*N*A120V24**22	37,200	14.0	19.0	1,120	860
4646441	24ANB136A**30	CNPH*4821A**	58HDV040––12	35,800	13.0	17.7	1,080	835
4646442	24ANB136A**30	CNPH*4821A**	58HDV060––12	36,600	13.0	17.7	1,285	1,030
4646678	24ANB136A**30	CNPH*4821A**	58HDV080––20	36,000	13.7	18.9	1,010	820
4646443	24ANB136A**30	CNPH*4821A**	58HDV100––20	36,800	13.5	18.7	1,255	995
4646692	24ANB136A**30	CNPH*4821A**	58MEB040–12	36,400	14.0	19.1	1,090	820
4646438	24ANB136A**30	CNPH*4821A**	58MEC060–12	37,000	13.2	18.7	1,290	840
4646700	24ANB136A**30	CNPH*4821A**	58MEC080–12	36,400	13.9	18.7	1,085	945
4646439	24ANB136A**30	CNPH*4821A**	58MEC080–16	36,800	13.5	18.5	1,230	1,020
4646440	24ANB136A**30	CNPH*4821A**	58MEC100–20	37,000	13.7	18.7	1,250	1,075
4646435	24ANB136A**30	CNPH*4821A**	58PH*045–08	36,000	13.2	18.2	1,100	765
4646784	24ANB136A**30	CNPH*4821A**	58PH*070–16	36,200	13.6	18.3	1,080	945
4646436	24ANB136A**30	CNPH*4821A**	58PH*090–16	36,800	13.9	18.8	1,230	975
4646437	24ANB136A**30	CNPH*4821A**	58PH*110–20	37,000	13.7	18.7	1,235	1,135
4646445	24ANB136A**30	CNPH*4821A**	58VLR120–20	36,600	13.7	18.7	1,170	675
4646444	24ANB136A**30	CNPH*4821A**	58VMR120–20	36,600	13.7	18.2	1,155	640
4739709	24ANB136A**30	CNPH*4821A**	59*P5A060E17**14	36,600	13.2	18.6	1,070	740
4739710	24ANB136A**30	CNPH*4821A**	59*P5A080E17**16	36,600	13.5	18.3	1,055	990
4646446	24ANB136A**30	CNPH*4821A**	OVLAAB048112	36,800	13.2	18.2	1,285	1,010
4646447	24ANB136A**30	CNPH*4821A**	OVLAAB060154	37,000	13.7	19.1	1,250	1,020
4646739	24ANB136A**30	CNPH*4821A**	OVMAAB042112	36,200	13.5	18.7	1,035	825
4646743	24ANB136A**30	CNPH*4821A**+TDR		35,800	12.8	16.5	1,050	840
4646631	24ANB136A**30	CNPH*4821A**+UI	58CV(A,X)070–12	36,400	13.5	18.7	1,120	860
4646632	24ANB136A**30	CNPH*4821A**+UI	58CV(A,X)090–16	36,600	13.9	19.0	1,120	860
4646633	24ANB136A**30	CNPH*4821A**+UI	58CV(A,X)110–20	36,600	13.9	19.0	1,120	860
4646634	24ANB136A**30	CNPH*4821A**+UI	58CV(A,X)135–22	36,800	14.0	19.2	1,120	860
4646635	24ANB136A**30	CNPH*4821A**+UI	58CV(A,X)155–22	36,800	14.1	19.2	1,120	860
4646626	24ANB136A**30	CNPH*4821A**+UI	58MV(B,C)060–14	36,600	13.7	19.0	1,120	860
4646627	24ANB136A**30	CNPH*4821A**+UI	58MV(B,C)080–14	36,600	13.7	18.5	1,120	860
4646628	24ANB136A**30	CNPH*4821A**+UI	58MV(B,C)080–20	36,600	13.8	18.7	1,120	860
4646629	24ANB136A**30	CNPH*4821A**+UI	58MV(B,C)100–20	36,600	13.7	18.7	1,120	860
4646630	24ANB136A**30	CNPH*4821A**+UI	58MV(B,C)120–20	36,600	13.8	18.7	1,120	860
4646625	24ANB136A**30	CNPH*4821A**+UI	58MVB040–14	36,600	13.5	18.7	1,120	860
4739663	24ANB136A**30	CNPH*4821A**+UI	59*N*A060V17**14	36,600	13.3	18.3	1,120	860
4739664	24ANB136A**30	CNPH*4821A**+UI	59*N*A080V17**14	36,600	13.5	18.5	1,120	860
4739665	24ANB136A**30	CNPH*4821A**+UI	59*N*A100V21**20	36,600	13.7	18.7	1,120	860
4739666	24ANB136A**30	CNPH*4821A**+UI	59*N*A120V24**22	36,600	13.8	18.7	1,120	860
4646323	24ANB136A**30	CNPV*3617A**	58HDV060––12	35,400	12.2	17.0	1,225	975
4646683	24ANB136A**30	CNPV*3617A**	58MEB040–12	35,200	13.5	18.4	1,045	785
4646321	24ANB136A**30	CNPV*3617A**	58MEC060–12	35,600	13.0	18.0	1,220	950
4646693	24ANB136A**30	CNPV*3617A**	58MEC080–12	35,200	13.3	18.0	1,035	905
4646322	24ANB136A**30	CNPV*3617A**	58MEC080–16	35,400	13.2	17.7	1,170	970
4646320	24ANB136A**30	CNPV*3617A**	58PH*045–08	34,800	12.5	17.5	1,055	740
4646705	24ANB136A**30	CNPV*3617A**	58PH*070–16	35,000	13.1	17.6	1,030	905
4646714	24ANB136A**30	CNPV*3617A**	58UVB060–14	35,200	13.2	18.0	1,055	870
4646324	24ANB136A**30	CNPV*3617A**	58VLR105–12	35,000	13.1	17.8	1,065	610
4739691	24ANB136A**30	CNPV*3617A**	59*P5A060E17**14	35,400	13.0	17.9	1,030	710
4739692	24ANB136A**30	CNPV*3617A**	59*P5A080E17**16	35,400	13.2	17.6	1,020	955

See notes on page 33

COMBINATION RATINGS CONTINUED

AHRI Ref. Number	Model Number	Indoor Coil Model Number	Furnace Model Number	AHRI Standard Ratings – Cooling				
				Cooling Capacity	EER	SEER	ID CFM	
							High	Low
4646772	24ANB136A**30	CNPV*3617A**	OVMAAB042112	35,000	13.0	18.0	1,035	825
4646319	24ANB136A**30	CNPV*3617A**+TDR		35,200	12.5	16.0	1,200	925
4646550	24ANB136A**30	CNPV*3617A**+UI	58CV(A,X)070–12	35,400	13.1	18.0	1,120	860
4646551	24ANB136A**30	CNPV*3617A**+UI	58CV(A,X)090–16	35,600	13.4	18.2	1,120	860
4646549	24ANB136A**30	CNPV*3617A**+UI	58MV(B,C)060–14	35,600	13.2	18.2	1,120	860
4739632	24ANB136A**30	CNPV*3617A**+UI	59*N*A060V17**14	35,600	12.7	17.6	1,120	860
4739633	24ANB136A**30	CNPV*3617A**+UI	59*N*A080V17**14	35,400	13.0	17.7	1,120	860
4646330	24ANB136A**30	CNPV*3621A**	58HDV060––12	35,400	12.2	17.0	1,235	980
4646331	24ANB136A**30	CNPV*3621A**	58HDV080––20	35,400	13.0	17.7	1,165	905
4646684	24ANB136A**30	CNPV*3621A**	58MEB040–12	35,200	13.5	18.4	1,050	785
4646328	24ANB136A**30	CNPV*3621A**	58MEC060–12	35,600	13.0	18.0	1,235	955
4646694	24ANB136A**30	CNPV*3621A**	58MEC080–12	35,200	13.3	18.0	1,040	910
4646703	24ANB136A**30	CNPV*3621A**	58MEC080–16	35,400	13.5	18.0	1,065	970
4646329	24ANB136A**30	CNPV*3621A**	58MEC100–20	35,600	13.2	18.0	1,185	1,020
4646706	24ANB136A**30	CNPV*3621A**	58PH*070–16	35,000	13.2	17.6	1,035	910
4646326	24ANB136A**30	CNPV*3621A**	58PH*090–16	35,600	13.4	18.0	1,175	925
4646327	24ANB136A**30	CNPV*3621A**	58PH*110–20	35,600	13.2	17.7	1,160	1,070
4646715	24ANB136A**30	CNPV*3621A**	58UVB060–14	35,200	13.3	18.0	1,055	870
4646720	24ANB136A**30	CNPV*3621A**	58UVB080–14	35,000	13.1	18.0	1,030	820
4646725	24ANB136A**30	CNPV*3621A**	58UVB080–20	35,000	13.2	18.0	1,010	840
4646730	24ANB136A**30	CNPV*3621A**	58UVB100–20	35,200	13.3	18.0	1,040	800
4646332	24ANB136A**30	CNPV*3621A**	58VLR105–12	35,000	13.2	17.9	1,065	610
4646334	24ANB136A**30	CNPV*3621A**	58VLR120–20	35,600	13.4	18.2	1,170	675
4646333	24ANB136A**30	CNPV*3621A**	58VMR120–20	35,400	13.3	17.7	1,155	640
4739693	24ANB136A**30	CNPV*3621A**	59*P5A060E17**14	35,400	13.0	17.9	1,035	710
4739694	24ANB136A**30	CNPV*3621A**	59*P5A080E17**16	35,400	13.3	17.6	1,025	955
4646761	24ANB136A**30	CNPV*3621A**	OVLAAB048112	35,200	13.0	17.7	1,085	880
4646773	24ANB136A**30	CNPV*3621A**	OVMAAB042112	35,200	13.0	18.0	1,035	825
4646325	24ANB136A**30	CNPV*3621A**+TDR		35,200	12.5	16.0	1,200	925
4646556	24ANB136A**30	CNPV*3621A**+UI	58CV(A,X)090–16	35,600	13.2	18.2	1,120	860
4646557	24ANB136A**30	CNPV*3621A**+UI	58CV(A,X)110–20	35,600	13.4	18.2	1,120	860
4646552	24ANB136A**30	CNPV*3621A**+UI	58MV(B,C)060–14	35,600	13.3	18.2	1,120	860
4646553	24ANB136A**30	CNPV*3621A**+UI	58MV(B,C)080–14	35,400	13.1	18.0	1,120	860
4646554	24ANB136A**30	CNPV*3621A**+UI	58MV(B,C)080–20	35,400	13.2	18.0	1,120	860
4646555	24ANB136A**30	CNPV*3621A**+UI	58MV(B,C)100–20	35,600	13.3	18.0	1,120	860
4739634	24ANB136A**30	CNPV*3621A**+UI	59*N*A060V17**14	35,600	12.7	17.6	1,120	860
4739635	24ANB136A**30	CNPV*3621A**+UI	59*N*A080V17**14	35,400	13.0	17.9	1,120	860
4739636	24ANB136A**30	CNPV*3621A**+UI	59*N*A100V21**20	35,600	13.2	18.0	1,120	860
4646339	24ANB136A**30	CNPV*3717A**	58HDV040––12	36,200	13.0	17.7	1,060	820
4646340	24ANB136A**30	CNPV*3717A**	58HDV060––12	37,000	13.0	17.7	1,255	1,005
4646685	24ANB136A**30	CNPV*3717A**	58MEB040–12	36,800	14.1	19.2	1,070	805
4646337	24ANB136A**30	CNPV*3717A**	58MEC060–12	37,200	13.5	18.7	1,255	975
4646695	24ANB136A**30	CNPV*3717A**	58MEC080–12	36,800	13.9	19.0	1,060	930
4646338	24ANB136A**30	CNPV*3717A**	58MEC080–16	37,200	13.5	18.7	1,205	1,000
4646336	24ANB136A**30	CNPV*3717A**	58PH*045–08	36,400	13.0	18.2	1,080	755
4646707	24ANB136A**30	CNPV*3717A**	58PH*070–16	36,600	13.7	18.4	1,055	930
4646716	24ANB136A**30	CNPV*3717A**	58UVB060–14	36,800	13.8	19.0	1,055	870
4646341	24ANB136A**30	CNPV*3717A**	58VLR105–12	36,600	13.6	18.4	1,065	610
4739695	24ANB136A**30	CNPV*3717A**	59*P5A060E17**14	37,000	13.5	18.7	1,050	730
4739696	24ANB136A**30	CNPV*3717A**	59*P5A080E17**16	37,000	13.5	18.4	1,040	975
4646737	24ANB136A**30	CNPV*3717A**	OVMAAB042112	36,600	13.5	18.7	1,035	825
4646335	24ANB136A**30	CNPV*3717A**+TDR		36,800	13.0	16.5	1,200	925
4646559	24ANB136A**30	CNPV*3717A**+UI	58CV(A,X)070–12	37,000	13.7	18.7	1,120	860
4646560	24ANB136A**30	CNPV*3717A**+UI	58CV(A,X)090–16	37,000	13.9	19.0	1,120	860
4646558	24ANB136A**30	CNPV*3717A**+UI	58MV(B,C)060–14	37,000	13.8	19.0	1,120	860
4739637	24ANB136A**30	CNPV*3717A**+UI	59*N*A060V17**14	37,000	13.3	18.4	1,120	860
4739638	24ANB136A**30	CNPV*3717A**+UI	59*N*A080V17**14	36,800	13.2	18.5	1,120	860
4646346	24ANB136A**30	CNPV*4217A**	58HDV040––12	35,400	13.0	17.5	1,055	815
4646347	24ANB136A**30	CNPV*4217A**	58HDV060––12	36,200	12.5	17.2	1,245	990
4646686	24ANB136A**30	CNPV*4217A**	58MEB040–12	36,000	13.8	18.8	1,060	795
4646343	24ANB136A**30	CNPV*4217A**	58MEC060–12	36,400	13.2	18.2	1,245	965
4646344	24ANB136A**30	CNPV*4217A**	58MEC080–12	36,400	13.5	18.5	1,235	930
4646345	24ANB136A**30	CNPV*4217A**	58MEC080–16	36,400	13.2	18.2	1,190	985
4646342	24ANB136A**30	CNPV*4217A**	58PH*045–08	35,600	13.0	18.0	1,070	745
4646708	24ANB136A**30	CNPV*4217A**	58PH*070–16	35,800	13.4	18.0	1,045	915
4646717	24ANB136A**30	CNPV*4217A**	58UVB060–14	36,000	13.5	18.5	1,055	870
4646348	24ANB136A**30	CNPV*4217A**	58VLR105–12	35,800	13.4	18.1	1,065	610
4739697	24ANB136A**30	CNPV*4217A**	59*P5A060E17**14	36,200	13.2	18.2	1,040	715
4739698	24ANB136A**30	CNPV*4217A**	59*P5A080E17**16	36,200	13.2	18.0	1,030	965
4646774	24ANB136A**30	CNPV*4217A**	OVMAAB042112	35,800	13.2	18.5	1,035	825
4646745	24ANB136A**30	CNPV*4217A**+TDR		35,600	12.7	16.4	1,050	840

See notes on page 33

COMBINATION RATINGS CONTINUED

AHRI Ref. Number	Model Number	Indoor Coil Model Number	Furnace Model Number	AHRI Standard Ratings – Cooling				
				Cooling Capacity	EER	SEER	ID CFM	
							High	Low
4646562	24ANB136A**30	CNPV*4217A**+UI	58CV(A,X)070–12	36,200	13.4	18.2	1,120	860
4646563	24ANB136A**30	CNPV*4217A**+UI	58CV(A,X)090–16	36,400	13.7	18.7	1,120	860
4646561	24ANB136A**30	CNPV*4217A**+UI	58MV(B,C)060–14	36,200	13.5	18.5	1,120	860
4739639	24ANB136A**30	CNPV*4217A**+UI	59*N*A060V17**14	36,200	13.0	18.0	1,120	860
4739640	24ANB136A**30	CNPV*4217A**+UI	59*N*A080V17**14	36,000	13.0	18.0	1,120	860
4646355	24ANB136A**30	CNPV*4221A**	58HDV040––12	35,200	12.7	17.5	1,055	815
4646356	24ANB136A**30	CNPV*4221A**	58HDV060––12	35,800	12.5	17.2	1,250	995
4646357	24ANB136A**30	CNPV*4221A**	58HDV080––20	36,000	13.2	18.2	1,180	915
4646687	24ANB136A**30	CNPV*4221A**	58MEB040–12	35,800	13.7	18.7	1,065	795
4646352	24ANB136A**30	CNPV*4221A**	58MEC060–12	36,200	13.0	18.2	1,250	965
4646696	24ANB136A**30	CNPV*4221A**	58MEC080–12	35,800	13.5	18.5	1,055	920
4646353	24ANB136A**30	CNPV*4221A**	58MEC080–16	36,000	13.4	18.0	1,195	990
4646354	24ANB136A**30	CNPV*4221A**	58MEC100–20	36,200	13.5	18.2	1,205	1,035
4646709	24ANB136A**30	CNPV*4221A**	58PH*070–16	35,400	13.3	17.8	1,045	915
4646350	24ANB136A**30	CNPV*4221A**	58PH*090–16	36,000	13.6	18.3	1,190	935
4646351	24ANB136A**30	CNPV*4221A**	58PH*110–20	36,200	13.5	18.2	1,185	1,090
4646718	24ANB136A**30	CNPV*4221A**	58UVB060–14	35,600	13.5	18.5	1,055	870
4646721	24ANB136A**30	CNPV*4221A**	58UVB080–14	35,400	13.3	18.0	1,030	820
4646726	24ANB136A**30	CNPV*4221A**	58UVB080–20	35,400	13.5	18.3	1,010	840
4646731	24ANB136A**30	CNPV*4221A**	58UVB100–20	35,600	13.6	18.3	1,040	800
4646358	24ANB136A**30	CNPV*4221A**	58VLR105–12	35,400	13.5	18.0	1,065	610
4646360	24ANB136A**30	CNPV*4221A**	58VLR120–20	36,000	13.6	18.6	1,170	675
4646359	24ANB136A**30	CNPV*4221A**	58VMR120–20	36,000	13.4	18.0	1,155	640
4739699	24ANB136A**30	CNPV*4221A**	59*P5A060E17**14	35,800	13.0	18.2	1,045	715
4739700	24ANB136A**30	CNPV*4221A**	59*P5A080E17**16	35,800	13.4	17.8	1,030	965
4646762	24ANB136A**30	CNPV*4221A**	OVLAAB048112	35,600	13.0	18.0	1,085	880
4646775	24ANB136A**30	CNPV*4221A**	OVMAAB042112	35,600	13.2	18.2	1,035	825
4646349	24ANB136A**30	CNPV*4221A**+TDR		35,600	12.6	16.0	1,200	925
4646568	24ANB136A**30	CNPV*4221A**+UI	58CV(A,X)090–16	36,000	13.6	18.5	1,120	860
4646569	24ANB136A**30	CNPV*4221A**+UI	58CV(A,X)110–20	36,000	13.8	18.7	1,120	860
4646564	24ANB136A**30	CNPV*4221A**+UI	58MV(B,C)060–14	36,000	13.5	18.5	1,120	860
4646565	24ANB136A**30	CNPV*4221A**+UI	58MV(B,C)080–14	35,800	13.3	18.4	1,120	860
4646566	24ANB136A**30	CNPV*4221A**+UI	58MV(B,C)080–20	36,000	13.5	18.4	1,120	860
4646567	24ANB136A**30	CNPV*4221A**+UI	58MV(B,C)100–20	36,000	13.6	18.5	1,120	860
4739641	24ANB136A**30	CNPV*4221A**+UI	59*N*A060V17**14	36,000	12.9	17.8	1,120	860
4739642	24ANB136A**30	CNPV*4221A**+UI	59*N*A080V17**14	35,800	13.2	18.2	1,120	860
4739643	24ANB136A**30	CNPV*4221A**+UI	59*N*A100V21**20	36,000	13.4	18.3	1,120	860
4646366	24ANB136A**30	CNPV*4324A**	58HDV080––20	37,400	13.7	18.7	1,230	965
4646681	24ANB136A**30	CNPV*4324A**	58HDV100––20	37,200	14.1	19.3	1,155	920
4646365	24ANB136A**30	CNPV*4324A**	58MEC100–20	37,000	14.0	19.2	1,260	1,085
4646363	24ANB136A**30	CNPV*4324A**	58PH*090–16	37,000	13.7	18.7	1,240	990
4646364	24ANB136A**30	CNPV*4324A**	58PH*110–20	37,000	14.0	19.0	1,250	1,150
4646722	24ANB136A**30	CNPV*4324A**	58UVB080–14	36,600	13.8	19.0	1,030	820
4646727	24ANB136A**30	CNPV*4324A**	58UVB080–20	36,600	13.9	19.0	1,010	840
4646732	24ANB136A**30	CNPV*4324A**	58UVB100–20	36,600	14.0	19.0	1,040	800
4646362	24ANB136A**30	CNPV*4324A**	58UVB120–20	37,200	14.1	19.4	1,175	845
4646368	24ANB136A**30	CNPV*4324A**	58VLR120–20	37,200	14.0	19.0	1,170	675
4646367	24ANB136A**30	CNPV*4324A**	58VMR120–20	37,000	14.0	18.5	1,155	640
4646763	24ANB136A**30	CNPV*4324A**	OVLAAB048112	36,800	13.7	18.7	1,085	880
4646369	24ANB136A**30	CNPV*4324A**	OVLAAB060154	37,000	14.0	19.4	1,250	1,020
4646361	24ANB136A**30	CNPV*4324A**+TDR		36,800	12.8	16.5	1,200	925
4646575	24ANB136A**30	CNPV*4324A**+UI	58CV(A,X)110–20	37,200	14.0	19.2	1,120	860
4646576	24ANB136A**30	CNPV*4324A**+UI	58CV(A,X)135–22	37,200	14.2	19.5	1,120	860
4646577	24ANB136A**30	CNPV*4324A**+UI	58CV(A,X)155–22	37,200	14.2	19.7	1,120	860
4646571	24ANB136A**30	CNPV*4324A**+UI	58MV(B,C)080–14	37,000	13.8	19.0	1,120	860
4646572	24ANB136A**30	CNPV*4324A**+UI	58MV(B,C)080–20	37,000	13.9	19.0	1,120	860
4646573	24ANB136A**30	CNPV*4324A**+UI	58MV(B,C)100–20	37,000	14.0	19.0	1,120	860
4646574	24ANB136A**30	CNPV*4324A**+UI	58MV(B,C)120–20	37,200	14.1	19.4	1,120	860
4646570	24ANB136A**30	CNPV*4324A**+UI	58MVB040–14	37,000	13.8	19.0	1,120	860
4739644	24ANB136A**30	CNPV*4324A**+UI	59*N*A100V21**20	37,000	14.0	19.0	1,120	860
4739645	24ANB136A**30	CNPV*4324A**+UI	59*N*A120V24**22	37,200	14.1	19.3	1,120	860
4646375	24ANB136A**30	CNPV*4821A**	58HDV040––12	35,800	13.0	17.7	1,080	835
4646376	24ANB136A**30	CNPV*4821A**	58HDV060––12	36,600	13.0	17.7	1,285	1,030
4646377	24ANB136A**30	CNPV*4821A**	58HDV080––20	36,800	13.5	18.5	1,220	950
4646688	24ANB136A**30	CNPV*4821A**	58MEB040–12	36,400	14.0	19.1	1,090	820
4646372	24ANB136A**30	CNPV*4821A**	58MEC060–12	37,000	13.2	18.7	1,290	840
4646697	24ANB136A**30	CNPV*4821A**	58MEC080–12	36,400	13.8	18.7	1,085	945
4646373	24ANB136A**30	CNPV*4821A**	58MEC080–16	36,800	13.5	17.5	1,230	1,020
4646374	24ANB136A**30	CNPV*4821A**	58MEC100–20	37,000	13.7	18.7	1,250	1,075
4646710	24ANB136A**30	CNPV*4821A**	58PH*070–16	36,200	13.6	18.3	1,080	945
4646370	24ANB136A**30	CNPV*4821A**	58PH*090–16	36,800	13.9	18.8	1,230	975

See notes on page 33

COMBINATION RATINGS CONTINUED

AHRI Ref. Number	Model Number	Indoor Coil Model Number	Furnace Model Number	AHRI Standard Ratings – Cooling				
				Cooling Capacity	EER	SEER	ID CFM	
							High	Low
4646371	24ANB136A**30	CNPV*4821A**	58PH*110–20	37,000	13.7	18.7	1,235	1,135
4646719	24ANB136A**30	CNPV*4821A**	58UVB060–14	36,200	13.8	19.0	1,055	870
4646723	24ANB136A**30	CNPV*4821A**	58UVB080–14	36,000	13.6	18.8	1,030	820
4646728	24ANB136A**30	CNPV*4821A**	58UVB080–20	36,000	13.7	18.5	1,010	840
4646733	24ANB136A**30	CNPV*4821A**	58UVB100–20	36,200	13.8	18.5	1,040	800
4646378	24ANB136A**30	CNPV*4821A**	58VLR105–12	36,000	13.5	18.2	1,065	610
4646380	24ANB136A**30	CNPV*4821A**	58VLR120–20	36,600	14.0	19.0	1,170	675
4646379	24ANB136A**30	CNPV*4821A**	58VMR120–20	36,600	13.7	18.4	1,155	640
4739701	24ANB136A**30	CNPV*4821A**	59*P5A060E17**14	36,600	13.2	18.6	1,070	740
4739702	24ANB136A**30	CNPV*4821A**	59*P5A080E17**16	36,600	13.5	17.5	1,055	990
4646738	24ANB136A**30	CNPV*4821A**	OVLAAB048112	36,400	13.5	18.5	1,085	880
4646381	24ANB136A**30	CNPV*4821A**	OVMAAB042112	36,600	13.5	18.6	1,205	960
4646780	24ANB136A**30	CNPV*4821A**+TDR		35,800	12.8	16.4	1,050	840
4646582	24ANB136A**30	CNPV*4821A**+UI	58CV(A,X)090–16	36,600	13.9	19.0	1,120	860
4646583	24ANB136A**30	CNPV*4821A**+UI	58CV(A,X)110–20	36,600	13.9	19.0	1,120	860
4646578	24ANB136A**30	CNPV*4821A**+UI	58MV(B,C)060–14	36,600	13.8	19.0	1,120	860
4646579	24ANB136A**30	CNPV*4821A**+UI	58MV(B,C)080–14	36,600	13.6	18.8	1,120	860
4646580	24ANB136A**30	CNPV*4821A**+UI	58MV(B,C)080–20	36,600	13.7	18.7	1,120	860
4646581	24ANB136A**30	CNPV*4821A**+UI	58MV(B,C)100–20	36,600	13.8	18.7	1,120	860
4739646	24ANB136A**30	CNPV*4821A**+UI	59*N*A060V17**14	36,600	13.3	18.3	1,120	860
4739647	24ANB136A**30	CNPV*4821A**+UI	59*N*A080V17**14	36,600	13.5	18.6	1,120	860
4739648	24ANB136A**30	CNPV*4821A**+UI	59*N*A100V21**20	36,600	13.8	18.7	1,120	860
4646386	24ANB136A**30	CNPV*4824A**	58HDV080––20	36,800	13.5	18.5	1,220	950
4646682	24ANB136A**30	CNPV*4824A**	58HDV100––20	36,600	13.9	19.0	1,140	905
4646385	24ANB136A**30	CNPV*4824A**	58MEC100–20	37,000	13.7	18.7	1,250	1,075
4646383	24ANB136A**30	CNPV*4824A**	58PH*090–16	36,800	13.7	18.5	1,230	975
4646384	24ANB136A**30	CNPV*4824A**	58PH*110–20	37,000	13.7	18.7	1,235	1,135
4646724	24ANB136A**30	CNPV*4824A**	58UVB080–14	36,000	13.6	18.8	1,030	820
4646729	24ANB136A**30	CNPV*4824A**	58UVB080–20	36,000	13.7	18.5	1,010	840
4646734	24ANB136A**30	CNPV*4824A**	58UVB100–20	36,200	13.8	18.5	1,040	800
4646382	24ANB136A**30	CNPV*4824A**	58UVB120–20	36,600	13.9	19.0	1,175	845
4646388	24ANB136A**30	CNPV*4824A**	58VLR120–20	36,600	13.7	18.7	1,170	675
4646387	24ANB136A**30	CNPV*4824A**	58VMR120–20	36,600	13.7	18.2	1,155	640
4646389	24ANB136A**30	CNPV*4824A**	OVLAAB048112	36,800	13.2	18.2	1,285	1,010
4646390	24ANB136A**30	CNPV*4824A**	OVLAAB060154	37,000	13.7	19.1	1,250	1,020
4646742	24ANB136A**30	CNPV*4824A**+TDR		35,800	12.8	16.5	1,050	840
4646589	24ANB136A**30	CNPV*4824A**+UI	58CV(A,X)110–20	36,600	13.8	19.0	1,120	860
4646590	24ANB136A**30	CNPV*4824A**+UI	58CV(A,X)135–22	36,800	14.0	19.2	1,120	860
4646591	24ANB136A**30	CNPV*4824A**+UI	58CV(A,X)155–22	36,800	14.1	19.2	1,120	860
4646585	24ANB136A**30	CNPV*4824A**+UI	58MV(B,C)080–14	36,600	13.6	18.8	1,120	860
4646586	24ANB136A**30	CNPV*4824A**+UI	58MV(B,C)080–20	36,600	13.7	18.7	1,120	860
4646587	24ANB136A**30	CNPV*4824A**+UI	58MV(B,C)100–20	36,600	13.8	18.7	1,120	860
4646588	24ANB136A**30	CNPV*4824A**+UI	58MV(B,C)120–20	36,600	13.9	19.0	1,120	860
4646584	24ANB136A**30	CNPV*4824A**+UI	58MVB040–14	36,600	13.6	18.7	1,120	860
4739649	24ANB136A**30	CNPV*4824A**+UI	59*N*A100V21**20	36,600	13.8	18.7	1,120	860
4739650	24ANB136A**30	CNPV*4824A**+UI	59*N*A120V24**22	36,600	13.9	19.0	1,120	860
4646454	24ANB136A**30	CSPH*3612A**	58HDV040––12	35,600	13.0	17.7	1,055	810
4646674	24ANB136A**30	CSPH*3612A**	58HDV060––12	36,200	13.3	18.3	1,100	780
4646455	24ANB136A**30	CSPH*3612A**	58HDV080––20	36,400	13.5	18.5	1,185	915
4646456	24ANB136A**30	CSPH*3612A**	58HDV100––20	36,600	13.2	18.5	1,215	960
4646747	24ANB136A**30	CSPH*3612A**	58MEB040–12	36,200	13.8	18.7	1,065	790
4646451	24ANB136A**30	CSPH*3612A**	58MEC060–12	36,600	13.2	18.5	1,250	965
4646701	24ANB136A**30	CSPH*3612A**	58MEC080–12	36,200	13.8	18.5	1,055	920
4646452	24ANB136A**30	CSPH*3612A**	58MEC080–16	36,600	13.6	18.5	1,200	990
4646453	24ANB136A**30	CSPH*3612A**	58MEC100–20	36,600	13.7	18.5	1,205	1,035
4646448	24ANB136A**30	CSPH*3612A**	58PH*045–08	35,800	13.0	18.0	1,075	745
4646711	24ANB136A**30	CSPH*3612A**	58PH*070–16	36,000	13.5	18.1	1,045	920
4646449	24ANB136A**30	CSPH*3612A**	58PH*090–16	36,600	13.7	18.5	1,195	935
4646450	24ANB136A**30	CSPH*3612A**	58PH*110–20	36,600	13.7	18.2	1,185	1,095
4646457	24ANB136A**30	CSPH*3612A**	58VLR105–12	36,000	13.6	18.0	1,065	610
4646459	24ANB136A**30	CSPH*3612A**	58VLR120–20	36,400	13.6	18.5	1,170	675
4646458	24ANB136A**30	CSPH*3612A**	58VMR120–20	36,400	13.7	18.2	1,155	640
4739711	24ANB136A**30	CSPH*3612A**	59*P5A060E17**14	36,400	13.2	18.3	1,045	710
4739712	24ANB136A**30	CSPH*3612A**	59*P5A080E17**16	36,400	13.6	18.1	1,035	965
4646767	24ANB136A**30	CSPH*3612A**	OVLAAB048112	36,200	13.2	18.2	1,085	880
4646461	24ANB136A**30	CSPH*3612A**	OVLAAB060154	36,800	13.7	18.7	1,250	1,020
4646460	24ANB136A**30	CSPH*3612A**	OVMAAB042112	36,400	13.2	18.2	1,205	960
4646744	24ANB136A**30	CSPH*3612A**+TDR		35,800	12.8	16.5	1,050	840
4646642	24ANB136A**30	CSPH*3612A**+UI	58CV(A,X)070–12	36,400	13.5	18.7	1,120	860
4646643	24ANB136A**30	CSPH*3612A**+UI	58CV(A,X)090–16	36,600	13.7	19.0	1,120	860
4646644	24ANB136A**30	CSPH*3612A**+UI	58CV(A,X)110–20	36,600	13.7	18.7	1,120	860

See notes on page 33

COMBINATION RATINGS CONTINUED

AHRI Ref. Number	Model Number	Indoor Coil Model Number	Furnace Model Number	AHRI Standard Ratings – Cooling				
				Cooling Capacity	EER	SEER	ID CFM	
							High	Low
4646645	24ANB136A**30	CSPH*3612A**+UI	58CV(A,X)135–22	36,600	13.8	18.7	1,120	860
4646646	24ANB136A**30	CSPH*3612A**+UI	58CV(A,X)155–22	36,600	13.9	19.0	1,120	860
4646637	24ANB136A**30	CSPH*3612A**+UI	58MV(B,C)060–14	36,400	13.5	18.7	1,120	860
4646638	24ANB136A**30	CSPH*3612A**+UI	58MV(B,C)080–14	36,400	13.5	18.5	1,120	860
4646639	24ANB136A**30	CSPH*3612A**+UI	58MV(B,C)080–20	36,400	13.6	18.5	1,120	860
4646640	24ANB136A**30	CSPH*3612A**+UI	58MV(B,C)100–20	36,400	13.5	18.5	1,120	860
4646641	24ANB136A**30	CSPH*3612A**+UI	58MV(B,C)120–20	36,600	13.7	18.7	1,120	860
4646636	24ANB136A**30	CSPH*3612A**+UI	58MVB040–14	36,400	13.6	18.5	1,120	860
4739667	24ANB136A**30	CSPH*3612A**+UI	59*N*A060V17**14	36,400	13.1	18.1	1,120	860
4739668	24ANB136A**30	CSPH*3612A**+UI	59*N*A080V17**14	36,400	13.4	18.4	1,120	860
4739669	24ANB136A**30	CSPH*3612A**+UI	59*N*A100V21**20	36,400	13.5	18.5	1,120	860
4739670	24ANB136A**30	CSPH*3612A**+UI	59*N*A120V24**22	36,600	13.7	18.7	1,120	860
4646469	24ANB136A**30	CSPH*4212A**	58HDV040––12	36,000	13.0	17.7	1,065	820
4646675	24ANB136A**30	CSPH*4212A**	58HDV060––12	36,400	13.4	18.4	1,110	790
4646679	24ANB136A**30	CSPH*4212A**	58HDV080––20	36,000	13.7	18.8	990	795
4646470	24ANB136A**30	CSPH*4212A**	58HDV100––20	37,000	13.5	18.5	1,230	970
4646748	24ANB136A**30	CSPH*4212A**	58MEB040–12	36,600	14.0	18.7	1,075	800
4646466	24ANB136A**30	CSPH*4212A**	58MEC060–12	37,000	13.2	18.5	1,265	975
4646702	24ANB136A**30	CSPH*4212A**	58MEC080–12	36,400	13.9	18.7	1,065	930
4646467	24ANB136A**30	CSPH*4212A**	58MEC080–16	36,800	13.7	18.5	1,210	1,000
4646468	24ANB136A**30	CSPH*4212A**	58MEC100–20	37,000	13.7	18.7	1,220	1,050
4646463	24ANB136A**30	CSPH*4212A**	58PH*045–08	36,000	13.0	18.2	1,080	750
4646712	24ANB136A**30	CSPH*4212A**	58PH*070–16	36,200	13.6	18.2	1,060	925
4646464	24ANB136A**30	CSPH*4212A**	58PH*090–16	36,800	13.8	18.7	1,205	950
4646465	24ANB136A**30	CSPH*4212A**	58PH*110–20	37,000	13.7	18.5	1,205	1,110
4646471	24ANB136A**30	CSPH*4212A**	58VLR105–12	36,200	13.7	18.2	1,065	610
4646473	24ANB136A**30	CSPH*4212A**	58VLR120–20	36,800	13.7	18.7	1,170	675
4646472	24ANB136A**30	CSPH*4212A**	58VMR120–20	36,600	13.8	18.3	1,155	640
4739713	24ANB136A**30	CSPH*4212A**	59*P5A060E17**14	36,600	13.2	18.5	1,055	720
4739714	24ANB136A**30	CSPH*4212A**	59*P5A080E17**16	36,600	13.7	18.2	1,040	975
4646768	24ANB136A**30	CSPH*4212A**	OVLAAB048112	36,400	13.2	18.2	1,085	880
4646474	24ANB136A**30	CSPH*4212A**	OVLAAB060154	37,000	13.7	19.0	1,250	1,020
4646778	24ANB136A**30	CSPH*4212A**	OVMAAB042112	36,200	13.5	18.7	1,035	825
4646462	24ANB136A**30	CSPH*4212A**+TDR		36,400	12.9	16.5	1,200	925
4646653	24ANB136A**30	CSPH*4212A**+UI	58CV(A,X)070–12	36,600	13.6	18.5	1,120	860
4646654	24ANB136A**30	CSPH*4212A**+UI	58CV(A,X)090–16	36,800	13.8	19.0	1,120	860
4646655	24ANB136A**30	CSPH*4212A**+UI	58CV(A,X)110–20	36,800	13.8	19.0	1,120	860
4646656	24ANB136A**30	CSPH*4212A**+UI	58CV(A,X)135–22	36,800	14.0	19.0	1,120	860
4646657	24ANB136A**30	CSPH*4212A**+UI	58CV(A,X)155–22	36,800	14.0	19.2	1,120	860
4646648	24ANB136A**30	CSPH*4212A**+UI	58MV(B,C)060–14	36,800	13.7	18.7	1,120	860
4646649	24ANB136A**30	CSPH*4212A**+UI	58MV(B,C)080–14	36,600	13.6	18.5	1,120	860
4646650	24ANB136A**30	CSPH*4212A**+UI	58MV(B,C)080–20	36,600	13.7	18.5	1,120	860
4646651	24ANB136A**30	CSPH*4212A**+UI	58MV(B,C)100–20	36,600	13.6	18.7	1,120	860
4646652	24ANB136A**30	CSPH*4212A**+UI	58MV(B,C)120–20	36,800	13.7	18.7	1,120	860
4646647	24ANB136A**30	CSPH*4212A**+UI	58MVB040–14	36,600	13.7	18.9	1,120	860
4739671	24ANB136A**30	CSPH*4212A**+UI	59*N*A060V17**14	36,800	13.3	18.2	1,120	860
4739672	24ANB136A**30	CSPH*4212A**+UI	59*N*A080V17**14	36,600	13.5	18.5	1,120	860
4739673	24ANB136A**30	CSPH*4212A**+UI	59*N*A100V21**20	36,600	13.6	18.6	1,120	860
4739674	24ANB136A**30	CSPH*4212A**+UI	59*N*A120V24**22	36,800	13.7	18.7	1,120	860
4646483	24ANB136A**30	CSPH*4812A**	58HDV040––12	36,000	13.0	17.7	1,065	825
4646676	24ANB136A**30	CSPH*4812A**	58HDV060––12	36,800	13.4	18.5	1,110	795
4646680	24ANB136A**30	CSPH*4812A**	58HDV080––20	36,200	13.7	19.0	990	805
4646484	24ANB136A**30	CSPH*4812A**	58HDV100––20	37,000	13.5	18.7	1,230	975
4646749	24ANB136A**30	CSPH*4812A**	58MEB040–12	36,600	14.0	19.0	1,075	805
4646479	24ANB136A**30	CSPH*4812A**	58MEC060–12	37,200	13.2	18.7	1,265	980
4646480	24ANB136A**30	CSPH*4812A**	58MEC080–12	37,200	13.7	19.0	1,250	940
4646481	24ANB136A**30	CSPH*4812A**	58MEC080–16	37,000	13.5	18.5	1,210	1,000
4646482	24ANB136A**30	CSPH*4812A**	58MEC100–20	37,200	13.7	18.7	1,220	1,050
4646476	24ANB136A**30	CSPH*4812A**	58PH*045–08	36,200	13.2	18.2	1,080	755
4646713	24ANB136A**30	CSPH*4812A**	58PH*070–16	36,400	13.6	18.3	1,060	930
4646477	24ANB136A**30	CSPH*4812A**	58PH*090–16	37,000	13.9	18.8	1,205	950
4646478	24ANB136A**30	CSPH*4812A**	58PH*110–20	37,000	13.7	18.7	1,200	1,105
4646485	24ANB136A**30	CSPH*4812A**	58VLR105–12	36,400	13.5	18.2	1,065	610
4646487	24ANB136A**30	CSPH*4812A**	58VLR120–20	36,800	13.7	18.7	1,170	675
4646486	24ANB136A**30	CSPH*4812A**	58VMR120–20	36,800	13.5	18.2	1,155	640
4739715	24ANB136A**30	CSPH*4812A**	59*P5A060E17**14	36,800	13.2	18.6	1,055	730
4739716	24ANB136A**30	CSPH*4812A**	59*P5A080E17**16	36,800	13.5	18.3	1,040	975
4646488	24ANB136A**30	CSPH*4812A**	OVLAAB048112	37,000	13.2	18.2	1,285	1,010
4646489	24ANB136A**30	CSPH*4812A**	OVLAAB060154	37,200	13.7	19.1	1,250	1,020
4646779	24ANB136A**30	CSPH*4812A**	OVMAAB042112	36,400	13.5	18.7	1,035	825
4646475	24ANB136A**30	CSPH*4812A**+TDR		36,600	12.9	16.5	1,200	925

See notes on page 33

COMBINATION RATINGS CONTINUED

AHRI Ref. Number	Model Number	Indoor Coil Model Number	Furnace Model Number	AHRI Standard Ratings – Cooling				
				Cooling Capacity	EER	SEER	ID CFM	
							High	Low
4646664	24ANB136A**30	CSPH*4812A**+UI	58CV(A,X)070–12	36,800	13.6	18.7	1,120	860
4646665	24ANB136A**30	CSPH*4812A**+UI	58CV(A,X)090–16	37,000	13.9	19.0	1,120	860
4646666	24ANB136A**30	CSPH*4812A**+UI	58CV(A,X)110–20	37,000	13.9	19.0	1,120	860
4646667	24ANB136A**30	CSPH*4812A**+UI	58CV(A,X)135–22	37,000	14.0	19.2	1,120	860
4646668	24ANB136A**30	CSPH*4812A**+UI	58CV(A,X)155–22	37,000	14.1	19.2	1,120	860
4646659	24ANB136A**30	CSPH*4812A**+UI	58MV(B,C)060–14	36,800	13.7	19.0	1,120	860
4646660	24ANB136A**30	CSPH*4812A**+UI	58MV(B,C)080–14	36,800	13.7	18.8	1,120	860
4646661	24ANB136A**30	CSPH*4812A**+UI	58MV(B,C)080–20	36,800	13.8	18.9	1,120	860
4646662	24ANB136A**30	CSPH*4812A**+UI	58MV(B,C)100–20	36,800	13.6	18.7	1,120	860
4646663	24ANB136A**30	CSPH*4812A**+UI	58MV(B,C)120–20	37,000	13.8	18.7	1,120	860
4646658	24ANB136A**30	CSPH*4812A**+UI	58MVB040–14	36,800	13.8	19.0	1,120	860
4739675	24ANB136A**30	CSPH*4812A**+UI	59*N*A060V17**14	36,800	13.3	18.3	1,120	860
4739676	24ANB136A**30	CSPH*4812A**+UI	59*N*A080V17**14	36,800	13.6	18.6	1,120	860
4739677	24ANB136A**30	CSPH*4812A**+UI	59*N*A100V21**20	36,800	13.6	18.7	1,120	860
4739678	24ANB136A**30	CSPH*4812A**+UI	59*N*A120V24**22	37,000	13.8	18.7	1,120	860
4646670	24ANB136A**30	FE4AN(B,F)003+UI		35,800	13.8	18.7	1,120	860
4646671	24ANB136A**30	FE4AN(B,F)005+UI		37,200	14.4	19.5	1,120	860
4646672	24ANB136A**30	FE4ANB006+UI		37,000	14.6	19.8	1,210	925
4646669	24ANB136A**30	FE4ANF002+UI		35,600	13.3	18.2	1,120	860
4646491	24ANB136A**30	FV4CN(B,F)003		35,200	13.7	18.9	1,050	840
4646492	24ANB136A**30	FV4CN(B,F)005		36,800	14.4	19.4	1,050	840
4646493	24ANB136A**30	FV4CNB006		37,200	14.5	19.8	1,050	840
4646490	24ANB136A**30	FV4CNF002		35,000	13.3	18.3	1,050	840
4646842	24ANB148A**30	†FE4ANB006+UI		48,000	13.5	18.0	1,400	1,120
4646845	24ANB148A**30	CAP**4817A**	58MEC080–16	46,500	12.5	16.7	1,415	1,095
4646844	24ANB148A**30	CAP**4817A**	58PH*070–16	46,000	11.7	15.5	1,415	1,245
4739717	24ANB148A**30	CAP**4817A**	59*P5A080E17**16	46,500	12.4	16.5	1,350	1,045
4646843	24ANB148A**30	CAP**4817A**+TDR		46,500	12.2	15.2	1,400	1,120
4647058	24ANB148A**30	CAP**4817A**+UI	58CV(A,X)090–16	46,500	12.7	17.0	1,300	1,040
4646854	24ANB148A**30	CAP**4821A**	58HDV080––20	46,500	12.2	16.2	1,470	1,165
4646852	24ANB148A**30	CAP**4821A**	58MEC080–16	46,000	12.3	16.5	1,430	1,105
4646853	24ANB148A**30	CAP**4821A**	58MEC100–20	46,500	12.7	17.0	1,385	1,050
4646849	24ANB148A**30	CAP**4821A**	58PH*070–16	45,500	11.7	16.0	1,430	1,080
4646850	24ANB148A**30	CAP**4821A**	58PH*090–16	46,000	12.5	16.7	1,395	1,090
4646851	24ANB148A**30	CAP**4821A**	58PH*110–20	46,000	13.0	17.0	1,350	1,110
4646847	24ANB148A**30	CAP**4821A**	58UVB080–20	45,500	12.3	16.0	1,310	1,200
4646848	24ANB148A**30	CAP**4821A**	58UVB100–20	46,000	12.3	16.2	1,395	1,145
4646856	24ANB148A**30	CAP**4821A**	58VLR120–20	46,000	12.7	16.5	1,350	765
4646855	24ANB148A**30	CAP**4821A**	58VMR120–20	46,000	12.5	16.2	1,355	720
4739718	24ANB148A**30	CAP**4821A**	59*P5A080E17**16	46,000	12.3	16.4	1,365	1,055
4739719	24ANB148A**30	CAP**4821A**	59*P5A100E21**16	45,500	12.2	16.0	1,360	1,180
4646857	24ANB148A**30	CAP**4821A**	OVLAAB048112	46,000	12.1	16.0	1,450	1,170
4646846	24ANB148A**30	CAP**4821A**+TDR		46,000	12.0	15.0	1,400	1,120
4647061	24ANB148A**30	CAP**4821A**+UI	58CV(A,X)090–16	46,000	12.7	16.7	1,300	1,040
4647062	24ANB148A**30	CAP**4821A**+UI	58CV(A,X)110–20	46,500	13.0	16.7	1,300	1,040
4647059	24ANB148A**30	CAP**4821A**+UI	58MV(B,C)080–20	46,000	12.5	16.5	1,300	1,040
4647060	24ANB148A**30	CAP**4821A**+UI	58MV(B,C)100–20	46,000	12.5	16.7	1,300	1,040
4739753	24ANB148A**30	CAP**4821A**+UI	59*N*A100V21**20	46,000	12.5	16.7	1,300	1,040
4646909	24ANB148A**30	CAP**4823A**	58HDV080––20	46,500	12.2	16.2	1,470	1,165
4646910	24ANB148A**30	CAP**4823A**	58HDV100––20	46,000	12.2	16.5	1,405	1,105
4646907	24ANB148A**30	CAP**4823A**	58MEC100–20	46,500	12.7	17.0	1,385	1,050
4646908	24ANB148A**30	CAP**4823A**	58MEC120–20	46,500	13.0	16.7	1,400	1,240
4646904	24ANB148A**30	CAP**4823A**	58PH*090–16	46,000	12.5	16.7	1,395	1,090
4646905	24ANB148A**30	CAP**4823A**	58PH*110–20	46,000	13.0	17.0	1,350	1,110
4646906	24ANB148A**30	CAP**4823A**	58PH*135–20	46,000	12.7	16.5	1,365	1,205
4646901	24ANB148A**30	CAP**4823A**	58UVB080–20	45,500	12.2	16.0	1,310	1,200
4646902	24ANB148A**30	CAP**4823A**	58UVB100–20	46,000	12.2	16.2	1,395	1,145
4646903	24ANB148A**30	CAP**4823A**	58UVB120–20	46,000	12.5	16.5	1,360	1,175
4646912	24ANB148A**30	CAP**4823A**	58VLR120–20	46,000	12.7	16.2	1,350	765
4646911	24ANB148A**30	CAP**4823A**	58VMR120–20	46,000	12.5	16.2	1,355	720
4739726	24ANB148A**30	CAP**4823A**	59*P5A100E21**16	46,000	12.2	16.0	1,360	1,180
4739727	24ANB148A**30	CAP**4823A**	59*P5A120E24**22	46,500	12.8	16.5	1,385	1,265
4646913	24ANB148A**30	CAP**4823A**	OVLAAB048112	46,000	12.1	16.0	1,450	1,170
4646900	24ANB148A**30	CAP**4823A**+TDR		46,000	12.0	15.0	1,400	1,120
4647082	24ANB148A**30	CAP**4823A**+UI	58CV(A,X)110–20	46,500	13.0	16.7	1,300	1,040
4647083	24ANB148A**30	CAP**4823A**+UI	58CV(A,X)135–22	46,500	13.0	17.0	1,300	1,040
4647084	24ANB148A**30	CAP**4823A**+UI	58CV(A,X)155–22	46,500	13.0	17.2	1,300	1,040
4647079	24ANB148A**30	CAP**4823A**+UI	58MV(B,C)080–20	46,000	12.5	16.5	1,300	1,040
4647080	24ANB148A**30	CAP**4823A**+UI	58MV(B,C)100–20	46,000	12.5	16.7	1,300	1,040
4647081	24ANB148A**30	CAP**4823A**+UI	58MV(B,C)120–20	46,000	12.7	16.7	1,300	1,040

See notes on page 33

COMBINATION RATINGS CONTINUED

AHRI Ref. Number	Model Number	Indoor Coil Model Number	Furnace Model Number	AHRI Standard Ratings – Cooling				
				Cooling Capacity	EER	SEER	ID CFM	
							High	Low
4739759	24ANB148A**30	CAP**4823A**+UI	59*N*A100V21**20	46,000	12.5	16.7	1,300	1,040
4739760	24ANB148A**30	CAP**4823A**+UI	59*N*A120V24**22	46,000	12.7	16.7	1,300	1,040
4646867	24ANB148A**30	CAP**4824A**	58HDV080––20	46,500	12.2	16.5	1,495	1,180
4646868	24ANB148A**30	CAP**4824A**	58HDV100––20	46,500	12.5	16.7	1,430	1,120
4646865	24ANB148A**30	CAP**4824A**	58MEC100–20	46,500	12.7	17.0	1,410	1,070
4646866	24ANB148A**30	CAP**4824A**	58MEC120–20	46,500	13.0	16.7	1,425	1,260
4646862	24ANB148A**30	CAP**4824A**	58PH*090–16	46,500	12.7	16.7	1,415	1,100
4646863	24ANB148A**30	CAP**4824A**	58PH*110–20	46,500	13.0	17.0	1,375	1,130
4646864	24ANB148A**30	CAP**4824A**	58PH*135–20	46,500	12.7	16.5	1,400	1,230
4646859	24ANB148A**30	CAP**4824A**	58UVB080–20	45,500	12.5	16.0	1,310	1,200
4646860	24ANB148A**30	CAP**4824A**	58UVB100–20	46,000	12.2	16.2	1,395	1,145
4646861	24ANB148A**30	CAP**4824A**	58UVB120–20	46,000	12.7	16.5	1,360	1,175
4646870	24ANB148A**30	CAP**4824A**	58VLR120–20	46,000	13.0	16.5	1,350	765
4646869	24ANB148A**30	CAP**4824A**	58VMR120–20	46,000	12.5	16.2	1,355	720
4739720	24ANB148A**30	CAP**4824A**	59*P5A100E21**16	46,000	12.2	16.0	1,380	1,195
4739721	24ANB148A**30	CAP**4824A**	59*P5A120E24**22	46,500	12.9	16.6	1,410	1,285
4646871	24ANB148A**30	CAP**4824A**	OVLAAB048112	46,000	12.2	16.0	1,450	1,170
4646872	24ANB148A**30	CAP**4824A**	OVLAAB060154	46,500	13.0	17.0	1,445	1,170
4646858	24ANB148A**30	CAP**4824A**+TDR		46,000	12.0	15.0	1,400	1,120
4647066	24ANB148A**30	CAP**4824A**+UI	58CV(A,X)110–20	46,500	13.0	17.0	1,300	1,040
4647067	24ANB148A**30	CAP**4824A**+UI	58CV(A,X)135–22	46,500	13.0	17.2	1,300	1,040
4647068	24ANB148A**30	CAP**4824A**+UI	58CV(A,X)155–22	46,500	13.2	17.2	1,300	1,040
4647063	24ANB148A**30	CAP**4824A**+UI	58MV(B,C)080–20	46,000	12.5	16.7	1,300	1,040
4647064	24ANB148A**30	CAP**4824A**+UI	58MV(B,C)100–20	46,000	12.7	16.7	1,300	1,040
4647065	24ANB148A**30	CAP**4824A**+UI	58MV(B,C)120–20	46,500	12.7	16.7	1,300	1,040
4739754	24ANB148A**30	CAP**4824A**+UI	59*N*A100V21**20	46,000	12.7	16.7	1,300	1,040
4739755	24ANB148A**30	CAP**4824A**+UI	59*N*A120V24**22	46,500	13.0	16.7	1,300	1,040
4646881	24ANB148A**30	CAP**6021A**	58HDV080––20	47,500	12.5	16.7	1,485	1,180
4646879	24ANB148A**30	CAP**6021A**	58MEC080–16	47,500	12.7	16.7	1,445	1,115
4646880	24ANB148A**30	CAP**6021A**	58MEC100–20	47,500	13.0	17.2	1,405	1,065
4646876	24ANB148A**30	CAP**6021A**	58PH*070–16	47,000	12.0	16.2	1,445	1,090
4646877	24ANB148A**30	CAP**6021A**	58PH*090–16	47,500	13.0	17.0	1,410	1,100
4646878	24ANB148A**30	CAP**6021A**	58PH*110–20	47,500	13.2	17.2	1,370	1,125
4646874	24ANB148A**30	CAP**6021A**	58UVB080–20	46,500	12.7	16.2	1,310	1,200
4646875	24ANB148A**30	CAP**6021A**	58UVB100–20	47,000	12.6	16.5	1,395	1,145
4646883	24ANB148A**30	CAP**6021A**	58VLR120–20	47,000	13.0	16.7	1,350	765
4646882	24ANB148A**30	CAP**6021A**	58VMR120–20	47,000	13.0	16.2	1,355	720
4739722	24ANB148A**30	CAP**6021A**	59*P5A080E17**16	47,500	12.6	16.6	1,375	1,065
4739723	24ANB148A**30	CAP**6021A**	59*P5A100E21**16	47,000	12.5	16.2	1,375	1,190
4646884	24ANB148A**30	CAP**6021A**	OVLAAB048112	47,000	12.5	16.2	1,450	1,170
4646873	24ANB148A**30	CAP**6021A**+TDR		47,000	12.3	15.5	1,400	1,120
4647071	24ANB148A**30	CAP**6021A**+UI	58CV(A,X)090–16	47,500	13.0	17.2	1,300	1,040
4647072	24ANB148A**30	CAP**6021A**+UI	58CV(A,X)110–20	47,500	13.2	17.2	1,300	1,040
4647069	24ANB148A**30	CAP**6021A**+UI	58MV(B,C)080–20	47,000	12.7	16.7	1,300	1,040
4647070	24ANB148A**30	CAP**6021A**+UI	58MV(B,C)100–20	47,000	13.0	16.7	1,300	1,040
4739756	24ANB148A**30	CAP**6021A**+UI	59*N*A100V21**20	47,000	13.0	16.7	1,300	1,040
4646894	24ANB148A**30	CAP**6024A**	58HDV080––20	47,500	12.5	16.7	1,495	1,185
4646895	24ANB148A**30	CAP**6024A**	58HDV100––20	47,500	12.7	16.7	1,430	1,125
4646892	24ANB148A**30	CAP**6024A**	58MEC100–20	47,500	13.0	17.2	1,410	1,070
4646893	24ANB148A**30	CAP**6024A**	58MEC120–20	47,500	13.2	17.2	1,425	1,260
4646889	24ANB148A**30	CAP**6024A**	58PH*090–16	47,500	13.0	17.0	1,420	1,100
4646890	24ANB148A**30	CAP**6024A**	58PH*110–20	47,500	13.2	17.2	1,380	1,130
4646891	24ANB148A**30	CAP**6024A**	58PH*135–20	47,500	13.0	16.7	1,400	1,235
4646886	24ANB148A**30	CAP**6024A**	58UVB080–20	47,000	12.7	16.2	1,310	1,200
4646887	24ANB148A**30	CAP**6024A**	58UVB100–20	47,000	12.7	16.5	1,395	1,145
4646888	24ANB148A**30	CAP**6024A**	58UVB120–20	47,000	13.0	16.7	1,360	1,175
4646897	24ANB148A**30	CAP**6024A**	58VLR120–20	47,000	13.0	16.7	1,350	765
4646896	24ANB148A**30	CAP**6024A**	58VMR120–20	47,000	12.7	16.2	1,355	720
4739724	24ANB148A**30	CAP**6024A**	59*P5A100E21**16	47,000	12.5	16.2	1,380	1,195
4739725	24ANB148A**30	CAP**6024A**	59*P5A120E24**22	47,500	13.1	16.8	1,415	1,290
4646898	24ANB148A**30	CAP**6024A**	OVLAAB048112	47,000	12.5	16.2	1,450	1,170
4646899	24ANB148A**30	CAP**6024A**	OVLAAB060154	47,500	13.2	17.2	1,445	1,170
4646885	24ANB148A**30	CAP**6024A**+TDR		47,000	12.3	15.2	1,400	1,120
4647076	24ANB148A**30	CAP**6024A**+UI	58CV(A,X)110–20	47,500	13.2	17.2	1,300	1,040
4647077	24ANB148A**30	CAP**6024A**+UI	58CV(A,X)135–22	47,500	13.2	17.2	1,300	1,040
4647078	24ANB148A**30	CAP**6024A**+UI	58CV(A,X)155–22	47,500	13.2	17.5	1,300	1,040
4647073	24ANB148A**30	CAP**6024A**+UI	58MV(B,C)080–20	47,000	13.0	16.7	1,300	1,040
4647074	24ANB148A**30	CAP**6024A**+UI	58MV(B,C)100–20	47,000	13.0	16.7	1,300	1,040
4647075	24ANB148A**30	CAP**6024A**+UI	58MV(B,C)120–20	47,500	13.0	17.0	1,300	1,040
4739757	24ANB148A**30	CAP**6024A**+UI	59*N*A100V21**20	47,000	13.0	16.7	1,300	1,040
4739758	24ANB148A**30	CAP**6024A**+UI	59*N*A120V24**22	47,500	13.0	17.0	1,300	1,040

See notes on page 33

COMBINATION RATINGS CONTINUED

AHRI Ref. Number	Model Number	Indoor Coil Model Number	Furnace Model Number	AHRI Standard Ratings – Cooling				
				Cooling Capacity	EER	SEER	ID CFM	
							High	Low
4646923	24ANB148A**30	CAP**6025A**	58HDV080– –20	47,500	12.5	16.7	1,495	1,185
4646924	24ANB148A**30	CAP**6025A**	58HDV100– –20	47,500	12.7	16.7	1,430	1,125
4646921	24ANB148A**30	CAP**6025A**	58MEC100–20	47,500	13.0	17.2	1,410	1,070
4646922	24ANB148A**30	CAP**6025A**	58MEC120–20	47,500	13.2	17.2	1,425	1,260
4646918	24ANB148A**30	CAP**6025A**	58PH*090–16	47,500	13.0	17.0	1,420	1,100
4646919	24ANB148A**30	CAP**6025A**	58PH*110–20	47,500	13.2	17.2	1,380	1,130
4646920	24ANB148A**30	CAP**6025A**	58PH*135–20	47,500	13.0	16.7	1,400	1,235
4646915	24ANB148A**30	CAP**6025A**	58UVB080–20	46,500	12.7	16.7	1,310	1,010
4646916	24ANB148A**30	CAP**6025A**	58UVB100–20	47,000	12.7	16.5	1,395	1,145
4646917	24ANB148A**30	CAP**6025A**	58UVB120–20	47,000	13.0	16.7	1,360	1,175
4646926	24ANB148A**30	CAP**6025A**	58VLR120–20	47,000	13.0	16.7	1,350	765
4646925	24ANB148A**30	CAP**6025A**	58VMR120–20	47,000	12.7	16.2	1,355	720
4739728	24ANB148A**30	CAP**6025A**	59*P5A100E21**16	47,000	12.5	16.2	1,380	1,195
4739729	24ANB148A**30	CAP**6025A**	59*P5A120E24**22	47,500	13.1	16.8	1,415	1,290
4646927	24ANB148A**30	CAP**6025A**	OVLAAB048112	47,000	12.5	16.2	1,450	1,170
4646928	24ANB148A**30	CAP**6025A**	OVLAAB060154	47,500	13.2	17.2	1,445	1,170
4646914	24ANB148A**30	CAP**6025A**+TDR		47,000	12.3	15.2	1,400	1,120
4647088	24ANB148A**30	CAP**6025A**+UI	58CV(A,X)110–20	47,500	13.2	17.2	1,300	1,040
4647089	24ANB148A**30	CAP**6025A**+UI	58CV(A,X)135–22	47,500	13.2	17.2	1,300	1,040
4647090	24ANB148A**30	CAP**6025A**+UI	58CV(A,X)155–22	47,500	13.5	17.5	1,300	1,040
4647085	24ANB148A**30	CAP**6025A**+UI	58MV(B,C)080–20	47,000	13.0	16.7	1,300	1,040
4647086	24ANB148A**30	CAP**6025A**+UI	58MV(B,C)100–20	47,000	13.0	16.7	1,300	1,040
4647087	24ANB148A**30	CAP**6025A**+UI	58MV(B,C)120–20	47,500	13.0	17.0	1,300	1,040
4739761	24ANB148A**30	CAP**6025A**+UI	59*N*A100V21**20	47,000	13.0	16.7	1,300	1,040
4739762	24ANB148A**30	CAP**6025A**+UI	59*N*A120V24**22	47,500	13.0	17.0	1,300	1,040
4646994	24ANB148A**30	CNPH*4821A**	58HDV080– –20	46,500	12.3	16.5	1,495	1,185
4646995	24ANB148A**30	CNPH*4821A**	58HDV100– –20	46,500	12.5	16.7	1,430	1,125
4646991	24ANB148A**30	CNPH*4821A**	58MEC080–16	46,500	12.5	16.7	1,450	1,120
4646992	24ANB148A**30	CNPH*4821A**	58MEC100–20	46,500	13.0	17.2	1,410	1,070
4646993	24ANB148A**30	CNPH*4821A**	58MEC120–20	46,500	13.0	17.0	1,425	1,260
4646987	24ANB148A**30	CNPH*4821A**	58PH*070–16	46,000	11.7	16.2	1,455	1,095
4646988	24ANB148A**30	CNPH*4821A**	58PH*090–16	46,500	12.7	17.0	1,420	1,105
4646989	24ANB148A**30	CNPH*4821A**	58PH*110–20	46,500	13.0	17.0	1,380	1,130
4646990	24ANB148A**30	CNPH*4821A**	58PH*135–20	46,500	12.7	16.7	1,400	1,235
4646997	24ANB148A**30	CNPH*4821A**	58VLR120–20	46,000	12.7	16.7	1,350	765
4646996	24ANB148A**30	CNPH*4821A**	58VMR120–20	46,000	12.5	16.2	1,355	720
4739738	24ANB148A**30	CNPH*4821A**	59*P5A080E17**16	46,500	12.4	16.5	1,380	1,065
4739739	24ANB148A**30	CNPH*4821A**	59*P5A100E21**16	46,000	12.2	16.0	1,385	1,200
4739740	24ANB148A**30	CNPH*4821A**	59*P5A120E24**22	46,500	12.9	16.7	1,415	1,290
4646998	24ANB148A**30	CNPH*4821A**	OVLAAB048112	46,000	12.2	16.0	1,450	1,170
4646999	24ANB148A**30	CNPH*4821A**	OVLAAB060154	46,500	13.0	17.0	1,445	1,170
4646986	24ANB148A**30	CNPH*4821A**+TDR		46,000	12.2	15.2	1,400	1,120
4647116	24ANB148A**30	CNPH*4821A**+UI	58CV(A,X)090–16	46,500	13.0	17.0	1,300	1,040
4647117	24ANB148A**30	CNPH*4821A**+UI	58CV(A,X)110–20	46,500	13.0	17.0	1,300	1,040
4647118	24ANB148A**30	CNPH*4821A**+UI	58CV(A,X)135–22	46,500	13.0	17.2	1,300	1,040
4647119	24ANB148A**30	CNPH*4821A**+UI	58CV(A,X)155–22	46,500	13.2	17.2	1,300	1,040
4647113	24ANB148A**30	CNPH*4821A**+UI	58MV(B,C)080–20	46,000	12.7	16.7	1,300	1,040
4647114	24ANB148A**30	CNPH*4821A**+UI	58MV(B,C)100–20	46,500	12.7	16.7	1,300	1,040
4647115	24ANB148A**30	CNPH*4821A**+UI	58MV(B,C)120–20	46,500	13.0	17.0	1,300	1,040
4739770	24ANB148A**30	CNPH*4821A**+UI	59*N*A100V21**20	46,500	12.7	16.7	1,300	1,040
4739771	24ANB148A**30	CNPH*4821A**+UI	59*N*A120V24**22	46,500	13.0	17.0	1,300	1,040
4647008	24ANB148A**30	CNPH*6024A**	58HDV080– –20	47,500	12.5	16.7	1,505	1,195
4647009	24ANB148A**30	CNPH*6024A**	58HDV100– –20	47,500	12.7	17.0	1,440	1,135
4647005	24ANB148A**30	CNPH*6024A**	58MEC080–16	47,500	12.6	17.0	1,455	1,130
4647006	24ANB148A**30	CNPH*6024A**	58MEC100–20	47,500	13.0	17.4	1,425	1,085
4647007	24ANB148A**30	CNPH*6024A**	58MEC120–20	47,500	13.2	17.2	1,440	1,275
4647001	24ANB148A**30	CNPH*6024A**	58PH*070–16	47,000	12.0	16.2	1,465	1,100
4647002	24ANB148A**30	CNPH*6024A**	58PH*090–16	47,500	13.0	17.2	1,430	1,115
4647003	24ANB148A**30	CNPH*6024A**	58PH*110–20	47,500	13.2	17.2	1,395	1,145
4647004	24ANB148A**30	CNPH*6024A**	58PH*135–20	47,500	13.0	17.0	1,420	1,255
4647011	24ANB148A**30	CNPH*6024A**	58VLR120–20	47,000	13.0	16.7	1,350	765
4647010	24ANB148A**30	CNPH*6024A**	58VMR120–20	47,000	13.0	16.5	1,355	720
4739741	24ANB148A**30	CNPH*6024A**	59*P5A080E17**16	47,500	12.6	16.7	1,390	1,075
4739742	24ANB148A**30	CNPH*6024A**	59*P5A100E21**16	47,000	12.5	16.2	1,395	1,210
4739743	24ANB148A**30	CNPH*6024A**	59*P5A120E24**22	47,500	13.1	16.9	1,425	1,305
4647012	24ANB148A**30	CNPH*6024A**	OVLAAB048112	47,000	12.5	16.2	1,450	1,170
4647013	24ANB148A**30	CNPH*6024A**	OVLAAB060154	47,500	13.2	17.2	1,445	1,170
4647000	24ANB148A**30	CNPH*6024A**+TDR		47,000	12.2	15.2	1,400	1,120
4647123	24ANB148A**30	CNPH*6024A**+UI	58CV(A,X)090–16	47,000	13.0	17.2	1,300	1,040
4647124	24ANB148A**30	CNPH*6024A**+UI	58CV(A,X)110–20	47,500	13.2	17.2	1,300	1,040
4647125	24ANB148A**30	CNPH*6024A**+UI	58CV(A,X)135–22	47,500	13.2	17.5	1,300	1,040

See notes on page 33

COMBINATION RATINGS CONTINUED

AHRI Ref. Number	Model Number	Indoor Coil Model Number	Furnace Model Number	AHRI Standard Ratings – Cooling				
				Cooling Capacity	EER	SEER	ID CFM	
							High	Low
4647126	24ANB148A**30	CNPH*6024A**+UI	58CV(A,X)155–22	47,500	13.2	17.5	1,300	1,040
4647120	24ANB148A**30	CNPH*6024A**+UI	58MV(B,C)080–20	47,000	13.0	17.0	1,300	1,040
4647121	24ANB148A**30	CNPH*6024A**+UI	58MV(B,C)100–20	47,000	13.0	17.0	1,300	1,040
4647122	24ANB148A**30	CNPH*6024A**+UI	58MV(B,C)120–20	48,000	13.0	17.2	1,300	1,040
4739772	24ANB148A**30	CNPH*6024A**+UI	59*N*A100V21**20	47,000	13.0	17.0	1,300	1,040
4739773	24ANB148A**30	CNPH*6024A**+UI	59*N*A120V24**22	47,500	13.0	17.2	1,300	1,040
4647022	24ANB148A**30	CNPH*6124A**	58HDV080––20	47,500	12.5	16.7	1,485	1,175
4647023	24ANB148A**30	CNPH*6124A**	58HDV100––20	47,500	13.0	17.0	1,420	1,115
4647019	24ANB148A**30	CNPH*6124A**	58MEC080–16	47,500	12.9	17.0	1,445	1,110
4647020	24ANB148A**30	CNPH*6124A**	58MEC100–20	47,500	13.0	17.2	1,400	1,060
4647021	24ANB148A**30	CNPH*6124A**	58MEC120–20	48,000	13.2	17.2	1,420	1,250
4647015	24ANB148A**30	CNPH*6124A**	58PH*070–16	47,000	12.0	16.2	1,445	1,085
4647016	24ANB148A**30	CNPH*6124A**	58PH*090–16	47,500	13.2	17.2	1,410	1,095
4647017	24ANB148A**30	CNPH*6124A**	58PH*110–20	47,500	13.4	17.2	1,370	1,120
4647018	24ANB148A**30	CNPH*6124A**	58PH*135–20	47,500	13.3	17.0	1,390	1,220
4647025	24ANB148A**30	CNPH*6124A**	58VLR120–20	47,500	13.0	16.7	1,350	765
4647024	24ANB148A**30	CNPH*6124A**	58VMR120–20	47,000	12.7	16.5	1,355	720
4739744	24ANB148A**30	CNPH*6124A**	59*P5A080E17**16	47,500	12.6	16.7	1,375	1,060
4739745	24ANB148A**30	CNPH*6124A**	59*P5A100E21**16	47,500	12.5	16.2	1,375	1,190
4739746	24ANB148A**30	CNPH*6124A**	59*P5A120E24**22	48,000	13.2	16.9	1,400	1,275
4647026	24ANB148A**30	CNPH*6124A**	OVLAAB048112	47,500	12.5	16.2	1,450	1,170
4647027	24ANB148A**30	CNPH*6124A**	OVLAAB060154	48,000	13.2	17.2	1,445	1,170
4647014	24ANB148A**30	CNPH*6124A**+TDR		47,000	12.3	15.2	1,400	1,120
4647130	24ANB148A**30	CNPH*6124A**+UI	58CV(A,X)090–16	47,500	13.0	17.2	1,300	1,040
4647131	24ANB148A**30	CNPH*6124A**+UI	58CV(A,X)110–20	47,500	13.4	17.2	1,300	1,040
4647132	24ANB148A**30	CNPH*6124A**+UI	58CV(A,X)135–22	48,000	13.6	17.5	1,300	1,040
4647133	24ANB148A**30	CNPH*6124A**+UI	58CV(A,X)155–22	48,000	13.2	17.5	1,300	1,040
4647127	24ANB148A**30	CNPH*6124A**+UI	58MV(B,C)080–20	47,500	13.0	16.7	1,300	1,040
4647128	24ANB148A**30	CNPH*6124A**+UI	58MV(B,C)100–20	47,500	13.1	17.0	1,300	1,040
4647129	24ANB148A**30	CNPH*6124A**+UI	58MV(B,C)120–20	47,500	13.3	17.2	1,300	1,040
4739774	24ANB148A**30	CNPH*6124A**+UI	59*N*A100V21**20	47,500	13.0	17.0	1,300	1,040
4739775	24ANB148A**30	CNPH*6124A**+UI	59*N*A120V24**22	47,500	13.3	17.2	1,300	1,040
4646937	24ANB148A**30	CNPV*4821A**	58HDV080––20	46,500	12.2	16.5	1,495	1,185
4646935	24ANB148A**30	CNPV*4821A**	58MEC080–16	46,500	12.5	16.7	1,450	1,120
4646936	24ANB148A**30	CNPV*4821A**	58MEC100–20	46,500	13.0	17.2	1,410	1,070
4646932	24ANB148A**30	CNPV*4821A**	58PH*070–16	46,000	11.7	16.2	1,455	1,095
4646933	24ANB148A**30	CNPV*4821A**	58PH*090–16	46,500	12.7	17.0	1,420	1,105
4646934	24ANB148A**30	CNPV*4821A**	58PH*110–20	46,500	13.0	17.0	1,380	1,130
4646930	24ANB148A**30	CNPV*4821A**	58UVB080–20	46,000	12.5	16.7	1,310	1,010
4646931	24ANB148A**30	CNPV*4821A**	58UVB100–20	46,000	12.5	16.2	1,395	1,145
4646939	24ANB148A**30	CNPV*4821A**	58VLR120–20	46,000	12.7	16.7	1,350	765
4646938	24ANB148A**30	CNPV*4821A**	58VMR120–20	46,000	12.5	16.2	1,355	720
4739730	24ANB148A**30	CNPV*4821A**	59*P5A080E17**16	46,500	12.3	16.5	1,380	1,065
4739731	24ANB148A**30	CNPV*4821A**	59*P5A100E21**16	46,000	12.2	16.0	1,385	1,200
4646940	24ANB148A**30	CNPV*4821A**	OVLAAB048112	46,000	12.2	16.0	1,450	1,170
4646929	24ANB148A**30	CNPV*4821A**+TDR		46,000	12.2	15.2	1,400	1,120
4647093	24ANB148A**30	CNPV*4821A**+UI	58CV(A,X)090–16	46,500	13.0	17.0	1,300	1,040
4647094	24ANB148A**30	CNPV*4821A**+UI	58CV(A,X)110–20	46,500	13.0	17.0	1,300	1,040
4647091	24ANB148A**30	CNPV*4821A**+UI	58MV(B,C)080–20	46,000	12.7	16.7	1,300	1,040
4647092	24ANB148A**30	CNPV*4821A**+UI	58MV(B,C)100–20	46,500	12.7	16.7	1,300	1,040
4739763	24ANB148A**30	CNPV*4821A**+UI	59*N*A100V21**20	46,500	12.7	16.7	1,300	1,040
4646950	24ANB148A**30	CNPV*4824A**	58HDV080––20	46,500	12.2	16.5	1,495	1,185
4646951	24ANB148A**30	CNPV*4824A**	58HDV100––20	46,500	12.5	16.7	1,430	1,125
4646948	24ANB148A**30	CNPV*4824A**	58MEC100–20	46,500	13.0	17.2	1,410	1,070
4646949	24ANB148A**30	CNPV*4824A**	58MEC120–20	46,500	13.0	17.0	1,425	1,260
4646945	24ANB148A**30	CNPV*4824A**	58PH*090–16	46,500	12.7	17.0	1,420	1,105
4646946	24ANB148A**30	CNPV*4824A**	58PH*110–20	46,500	13.0	17.0	1,380	1,130
4646947	24ANB148A**30	CNPV*4824A**	58PH*135–20	46,500	12.7	16.7	1,400	1,235
4646942	24ANB148A**30	CNPV*4824A**	58UVB080–20	46,000	12.5	16.2	1,310	1,200
4646943	24ANB148A**30	CNPV*4824A**	58UVB100–20	46,000	12.5	16.5	1,395	1,145
4646944	24ANB148A**30	CNPV*4824A**	58UVB120–20	46,000	12.7	16.5	1,360	1,175
4646953	24ANB148A**30	CNPV*4824A**	58VLR120–20	46,000	12.7	16.7	1,350	765
4646952	24ANB148A**30	CNPV*4824A**	58VMR120–20	46,000	12.5	16.2	1,355	720
4739732	24ANB148A**30	CNPV*4824A**	59*P5A100E21**16	46,000	12.2	16.0	1,385	1,200
4739733	24ANB148A**30	CNPV*4824A**	59*P5A120E24**22	46,500	12.9	16.7	1,415	1,290
4646954	24ANB148A**30	CNPV*4824A**	OVLAAB048112	46,000	12.2	16.0	1,450	1,170
4646955	24ANB148A**30	CNPV*4824A**	OVLAAB060154	46,500	13.0	17.0	1,445	1,170
4646941	24ANB148A**30	CNPV*4824A**+TDR		46,000	12.2	15.2	1,400	1,120
4647098	24ANB148A**30	CNPV*4824A**+UI	58CV(A,X)110–20	46,500	13.0	17.0	1,300	1,040
4647099	24ANB148A**30	CNPV*4824A**+UI	58CV(A,X)135–22	46,500	13.0	17.2	1,300	1,040
4647100	24ANB148A**30	CNPV*4824A**+UI	58CV(A,X)155–22	46,500	13.2	17.2	1,300	1,040

See notes on page 33

COMBINATION RATINGS CONTINUED

AHRI Ref. Number	Model Number	Indoor Coil Model Number	Furnace Model Number	AHRI Standard Ratings – Cooling				
				Cooling Capacity	EER	SEER	ID CFM	
							High	Low
4647095	24ANB148A**30	CNPV*4824A**+UI	58MV(B,C)080–20	46,000	12.7	16.7	1,300	1,040
4647096	24ANB148A**30	CNPV*4824A**+UI	58MV(B,C)100–20	46,500	12.7	16.7	1,300	1,040
4647097	24ANB148A**30	CNPV*4824A**+UI	58MV(B,C)120–20	46,500	13.0	17.0	1,300	1,040
4739764	24ANB148A**30	CNPV*4824A**+UI	59*N*A100V21**20	46,500	12.7	16.7	1,300	1,040
4739765	24ANB148A**30	CNPV*4824A**+UI	59*N*A120V24**22	46,500	13.0	17.0	1,300	1,040
4646965	24ANB148A**30	CNPV*6024A**	58HDV080––20	47,500	12.5	16.7	1,505	1,195
4646966	24ANB148A**30	CNPV*6024A**	58HDV100––20	47,500	12.7	17.0	1,440	1,135
4646963	24ANB148A**30	CNPV*6024A**	58MEC100–20	47,500	13.0	17.2	1,425	1,085
4646964	24ANB148A**30	CNPV*6024A**	58MEC120–20	47,500	13.2	17.2	1,440	1,275
4646960	24ANB148A**30	CNPV*6024A**	58PH*090–16	47,500	13.0	17.2	1,430	1,115
4646961	24ANB148A**30	CNPV*6024A**	58PH*110–20	47,500	13.2	17.2	1,395	1,145
4646962	24ANB148A**30	CNPV*6024A**	58PH*135–20	47,500	13.0	17.0	1,420	1,255
4646957	24ANB148A**30	CNPV*6024A**	58UVB080–20	46,500	12.7	16.5	1,310	1,200
4646958	24ANB148A**30	CNPV*6024A**	58UVB100–20	47,000	12.7	16.7	1,395	1,145
4646959	24ANB148A**30	CNPV*6024A**	58UVB120–20	47,000	13.0	16.7	1,360	1,175
4646968	24ANB148A**30	CNPV*6024A**	58VLR120–20	47,000	13.0	16.7	1,350	765
4646967	24ANB148A**30	CNPV*6024A**	58VMR120–20	47,000	13.0	16.5	1,355	720
4739734	24ANB148A**30	CNPV*6024A**	59*P5A100E21**16	47,000	12.5	16.2	1,395	1,210
4739735	24ANB148A**30	CNPV*6024A**	59*P5A120E24**22	47,500	13.1	16.9	1,425	1,305
4646969	24ANB148A**30	CNPV*6024A**	OVLAAB048112	47,000	12.5	16.2	1,450	1,170
4646970	24ANB148A**30	CNPV*6024A**	OVLAAB060154	47,500	13.2	17.2	1,445	1,170
4646956	24ANB148A**30	CNPV*6024A**+TDR		47,000	12.2	15.2	1,400	1,120
4647104	24ANB148A**30	CNPV*6024A**+UI	58CV(A,X)110–20	47,500	13.2	17.2	1,300	1,040
4647105	24ANB148A**30	CNPV*6024A**+UI	58CV(A,X)135–22	47,500	13.2	17.5	1,300	1,040
4647106	24ANB148A**30	CNPV*6024A**+UI	58CV(A,X)155–22	47,500	13.2	17.5	1,300	1,040
4647101	24ANB148A**30	CNPV*6024A**+UI	58MV(B,C)080–20	47,000	13.0	17.0	1,300	1,040
4647102	24ANB148A**30	CNPV*6024A**+UI	58MV(B,C)100–20	47,000	13.0	17.0	1,300	1,040
4647103	24ANB148A**30	CNPV*6024A**+UI	58MV(B,C)120–20	47,500	13.0	17.2	1,300	1,040
4739766	24ANB148A**30	CNPV*6024A**+UI	59*N*A100V21**20	47,000	13.0	17.0	1,300	1,040
4739767	24ANB148A**30	CNPV*6024A**+UI	59*N*A120V24**22	47,500	13.0	17.2	1,300	1,040
4646980	24ANB148A**30	CNPV*6124A**	58HDV080––20	48,000	12.7	17.0	1,510	1,205
4646981	24ANB148A**30	CNPV*6124A**	58HDV100––20	48,000	13.0	17.2	1,445	1,145
4646978	24ANB148A**30	CNPV*6124A**	58MEC100–20	48,000	13.2	17.7	1,430	1,095
4646979	24ANB148A**30	CNPV*6124A**	58MEC120–20	48,500	13.2	17.5	1,445	1,285
4646975	24ANB148A**30	CNPV*6124A**	58PH*090–16	48,000	13.3	17.5	1,435	1,125
4646976	24ANB148A**30	CNPV*6124A**	58PH*110–20	48,000	13.6	17.5	1,400	1,160
4646977	24ANB148A**30	CNPV*6124A**	58PH*135–20	48,000	13.4	17.5	1,425	1,265
4646972	24ANB148A**30	CNPV*6124A**	58UVB080–20	47,500	13.0	16.7	1,310	1,200
4646973	24ANB148A**30	CNPV*6124A**	58UVB100–20	47,500	13.1	17.0	1,395	1,145
4646974	24ANB148A**30	CNPV*6124A**	58UVB120–20	47,500	13.3	17.4	1,360	1,175
4646983	24ANB148A**30	CNPV*6124A**	58VLR120–20	47,500	13.4	17.2	1,350	765
4646982	24ANB148A**30	CNPV*6124A**	58VMR120–20	47,500	13.2	16.7	1,355	720
4739736	24ANB148A**30	CNPV*6124A**	59*P5A100E21**16	47,500	13.0	16.5	1,400	1,215
4739737	24ANB148A**30	CNPV*6124A**	59*P5A120E24**22	48,500	13.2	17.2	1,435	1,315
4646984	24ANB148A**30	CNPV*6124A**	OVLAAB048112	47,500	12.7	16.7	1,450	1,170
4646985	24ANB148A**30	CNPV*6124A**	OVLAAB060154	48,000	13.4	17.5	1,445	1,170
4646971	24ANB148A**30	CNPV*6124A**+TDR		47,500	12.7	15.5	1,400	1,120
4647110	24ANB148A**30	CNPV*6124A**+UI	58CV(A,X)110–20	48,000	13.6	17.5	1,300	1,040
4647111	24ANB148A**30	CNPV*6124A**+UI	58CV(A,X)135–22	48,000	13.7	17.7	1,300	1,040
4647112	24ANB148A**30	CNPV*6124A**+UI	58CV(A,X)155–22	48,000	13.8	17.7	1,300	1,040
4647107	24ANB148A**30	CNPV*6124A**+UI	58MV(B,C)080–20	47,500	13.0	17.2	1,300	1,040
4647108	24ANB148A**30	CNPV*6124A**+UI	58MV(B,C)100–20	48,000	13.3	17.2	1,300	1,040
4647109	24ANB148A**30	CNPV*6124A**+UI	58MV(B,C)120–20	48,000	13.5	17.5	1,300	1,040
4739768	24ANB148A**30	CNPV*6124A**+UI	59*N*A100V21**20	48,000	13.2	17.2	1,300	1,040
4739769	24ANB148A**30	CNPV*6124A**+UI	59*N*A120V24**22	48,000	13.4	17.5	1,300	1,040
4647036	24ANB148A**30	CSPH*4812A**	58HDV080––20	47,000	12.3	16.5	1,465	1,160
4647037	24ANB148A**30	CSPH*4812A**	58HDV100––20	46,500	12.5	16.7	1,400	1,100
4647033	24ANB148A**30	CSPH*4812A**	58MEC080–16	46,500	12.5	16.7	1,425	1,100
4647034	24ANB148A**30	CSPH*4812A**	58MEC100–20	47,000	13.0	17.2	1,380	1,045
4647035	24ANB148A**30	CSPH*4812A**	58MEC120–20	47,000	13.0	17.0	1,395	1,230
4647029	24ANB148A**30	CSPH*4812A**	58PH*070–16	46,000	11.7	16.2	1,425	1,075
4647030	24ANB148A**30	CSPH*4812A**	58PH*090–16	47,000	12.7	17.0	1,390	1,080
4647031	24ANB148A**30	CSPH*4812A**	58PH*110–20	46,500	13.0	16.5	1,340	1,340
4647032	24ANB148A**30	CSPH*4812A**	58PH*135–20	46,500	12.7	16.7	1,360	1,200
4647039	24ANB148A**30	CSPH*4812A**	58VLR120–20	46,500	12.7	16.7	1,350	765
4647038	24ANB148A**30	CSPH*4812A**	58VMR120–20	46,500	12.5	16.2	1,355	720
4739747	24ANB148A**30	CSPH*4812A**	59*P5A080E17**16	46,500	12.4	16.6	1,360	1,050
4739748	24ANB148A**30	CSPH*4812A**	59*P5A100E21**16	46,500	12.2	16.2	1,355	1,175
4739749	24ANB148A**30	CSPH*4812A**	59*P5A120E24**22	47,000	12.9	16.7	1,375	1,255
4647040	24ANB148A**30	CSPH*4812A**	OVLAAB048112	46,500	12.2	16.0	1,450	1,170
4647041	24ANB148A**30	CSPH*4812A**	OVLAAB060154	47,000	13.0	17.0	1,445	1,170

See notes on page 33

COMBINATION RATINGS CONTINUED

AHRI Ref. Number	Model Number	Indoor Coil Model Number	Furnace Model Number	AHRI Standard Ratings – Cooling				
				Cooling Capacity	EER	SEER	ID CFM	
							High	Low
4647028	24ANB148A**30	CSPH*4812A**+TDR		46,500	12.2	15.2	1,400	1,120
4647137	24ANB148A**30	CSPH*4812A**+UI	58CV(A,X)090–16	47,000	13.0	17.0	1,300	1,040
4647138	24ANB148A**30	CSPH*4812A**+UI	58CV(A,X)110–20	47,000	13.0	17.0	1,300	1,040
4647139	24ANB148A**30	CSPH*4812A**+UI	58CV(A,X)135–22	47,000	13.0	17.2	1,300	1,040
4647140	24ANB148A**30	CSPH*4812A**+UI	58CV(A,X)155–22	47,000	13.2	17.2	1,300	1,040
4647134	24ANB148A**30	CSPH*4812A**+UI	58MV(B,C)080–20	46,500	12.7	16.7	1,300	1,040
4647135	24ANB148A**30	CSPH*4812A**+UI	58MV(B,C)100–20	46,500	12.7	16.7	1,300	1,040
4647136	24ANB148A**30	CSPH*4812A**+UI	58MV(B,C)120–20	47,000	13.0	17.0	1,300	1,040
4739776	24ANB148A**30	CSPH*4812A**+UI	59*N*A100V21**20	46,500	12.7	16.7	1,300	1,040
4739777	24ANB148A**30	CSPH*4812A**+UI	59*N*A120V24**22	47,000	13.0	17.0	1,300	1,040
4647050	24ANB148A**30	CSPH*6012A**	58HDV080––20	48,000	12.6	16.7	1,510	1,190
4647051	24ANB148A**30	CSPH*6012A**	58HDV100––20	47,500	12.7	17.0	1,440	1,130
4647047	24ANB148A**30	CSPH*6012A**	58MEC080–16	47,500	12.7	17.0	1,460	1,125
4647048	24ANB148A**30	CSPH*6012A**	58MEC100–20	48,000	13.2	17.5	1,425	1,075
4647049	24ANB148A**30	CSPH*6012A**	58MEC120–20	48,000	13.2	17.2	1,440	1,270
4647043	24ANB148A**30	CSPH*6012A**	58PH*070–16	47,000	12.0	16.5	1,465	1,095
4647044	24ANB148A**30	CSPH*6012A**	58PH*090–16	47,500	13.0	17.2	1,430	1,110
4647045	24ANB148A**30	CSPH*6012A**	58PH*110–20	47,500	13.2	17.2	1,395	1,135
4647046	24ANB148A**30	CSPH*6012A**	58PH*135–20	48,000	13.0	17.0	1,420	1,250
4647053	24ANB148A**30	CSPH*6012A**	58VLR120–20	47,500	13.0	16.7	1,350	765
4647052	24ANB148A**30	CSPH*6012A**	58VMR120–20	47,000	13.0	16.5	1,355	720
4739750	24ANB148A**30	CSPH*6012A**	59*P5A080E17**16	47,500	12.7	16.8	1,390	1,070
4739751	24ANB148A**30	CSPH*6012A**	59*P5A100E21**16	47,500	12.7	16.5	1,395	1,205
4739752	24ANB148A**30	CSPH*6012A**	59*P5A120E24**22	48,000	13.2	17.0	1,430	1,300
4647054	24ANB148A**30	CSPH*6012A**	OVLAAB048112	47,500	12.6	16.5	1,450	1,170
4647055	24ANB148A**30	CSPH*6012A**	OVLAAB060154	48,000	13.2	17.2	1,445	1,170
4647042	24ANB148A**30	CSPH*6012A**+TDR		47,000	12.3	15.5	1,400	1,120
4647144	24ANB148A**30	CSPH*6012A**+UI	58CV(A,X)090–16	47,500	13.0	17.2	1,300	1,040
4647145	24ANB148A**30	CSPH*6012A**+UI	58CV(A,X)110–20	47,500	13.2	17.2	1,300	1,040
4647146	24ANB148A**30	CSPH*6012A**+UI	58CV(A,X)135–22	48,000	13.2	17.5	1,300	1,040
4647147	24ANB148A**30	CSPH*6012A**+UI	58CV(A,X)155–22	48,000	13.5	17.7	1,300	1,040
4647141	24ANB148A**30	CSPH*6012A**+UI	58MV(B,C)080–20	47,500	13.0	17.0	1,300	1,040
4647142	24ANB148A**30	CSPH*6012A**+UI	58MV(B,C)100–20	47,500	13.0	17.0	1,300	1,040
4647143	24ANB148A**30	CSPH*6012A**+UI	58MV(B,C)120–20	47,500	13.2	17.2	1,300	1,040
4739778	24ANB148A**30	CSPH*6012A**+UI	59*N*A100V21**20	47,500	13.0	17.0	1,300	1,040
4739779	24ANB148A**30	CSPH*6012A**+UI	59*N*A120V24**22	47,500	13.2	17.2	1,300	1,040
4647148	24ANB148A**30	FE4AN(B,F)005+UI		47,500	13.2	17.5	1,300	1,040
4647056	24ANB148A**30	FV4CN(B,F)005		47,500	13.2	17.5	1,400	1,120
4647057	24ANB148A**30	FV4CNB006		48,000	13.5	17.7	1,400	1,120
4647149	24ANB160A**30	†FE4ANB006+UI		59,000	13.1	16.7	1,750	1,400
4647156	24ANB160A**30	CAP**6021A**	58HDV080––20	57,500	11.5	15.2	1,830	1,440
4647154	24ANB160A**30	CAP**6021A**	58MEC080–16	57,000	12.0	15.0	1,585	1,450
4647155	24ANB160A**30	CAP**6021A**	58MEC100–20	57,500	12.2	15.7	1,620	1,425
4647153	24ANB160A**30	CAP**6021A**	58PH*110–20	57,500	12.6	16.1	1,670	1,400
4647151	24ANB160A**30	CAP**6021A**	58UVB080–20	57,000	11.7	15.5	1,730	1,310
4647152	24ANB160A**30	CAP**6021A**	58UVB100–20	57,000	11.9	15.3	1,660	1,395
4647158	24ANB160A**30	CAP**6021A**	58VLR120–20	57,500	12.2	16.0	1,735	910
4647157	24ANB160A**30	CAP**6021A**	58VMR120–20	57,000	11.9	15.7	1,740	900
4647150	24ANB160A**30	CAP**6021A**+TDR		57,500	12.3	14.8	1,750	1,400
4647247	24ANB160A**30	CAP**6021A**+UI	58CV(A,X)110–20	57,500	12.5	16.0	1,625	1,300
4647245	24ANB160A**30	CAP**6021A**+UI	58MV(B,C)080–20	57,000	12.0	15.5	1,625	1,300
4647246	24ANB160A**30	CAP**6021A**+UI	58MV(B,C)100–20	57,000	12.2	15.5	1,625	1,300
4739780	24ANB160A**30	CAP**6021A**+UI	59*N*A100V21**20	57,000	12.0	15.5	1,625	1,300
4647167	24ANB160A**30	CAP**6024A**	58HDV080––20	57,500	11.5	15.2	1,845	1,445
4647168	24ANB160A**30	CAP**6024A**	58HDV100––20	57,500	12.1	15.5	1,775	1,415
4647165	24ANB160A**30	CAP**6024A**	58MEC100–20	57,500	12.2	15.7	1,630	1,430
4647166	24ANB160A**30	CAP**6024A**	58MEC120–20	57,500	12.5	15.7	1,640	1,450
4647163	24ANB160A**30	CAP**6024A**	58PH*110–20	58,000	12.5	15.7	1,685	1,410
4647164	24ANB160A**30	CAP**6024A**	58PH*135–20	57,500	12.6	15.9	1,650	1,430
4647160	24ANB160A**30	CAP**6024A**	58UVB080–20	57,000	11.5	15.2	1,730	1,310
4647161	24ANB160A**30	CAP**6024A**	58UVB100–20	57,000	11.7	15.0	1,660	1,395
4647162	24ANB160A**30	CAP**6024A**	58UVB120–20	57,500	12.2	15.5	1,680	1,360
4647170	24ANB160A**30	CAP**6024A**	58VLR120–20	57,500	12.3	16.0	1,735	910
4647169	24ANB160A**30	CAP**6024A**	58VMR120–20	57,000	11.9	15.7	1,740	900
4739795	24ANB160A**30	CAP**6024A**	59*P5A120E24**22	57,500	12.5	15.7	1,640	1,310
4647233	24ANB160A**30	CAP**6024A**	OVLAAB060154	57,500	12.2	16.0	1,670	1,330
4647159	24ANB160A**30	CAP**6024A**+TDR		57,500	12.3	14.8	1,750	1,400
4647251	24ANB160A**30	CAP**6024A**+UI	58CV(A,X)110–20	57,500	12.2	16.0	1,625	1,300
4647252	24ANB160A**30	CAP**6024A**+UI	58CV(A,X)135–22	57,500	12.8	16.2	1,625	1,300
4647253	24ANB160A**30	CAP**6024A**+UI	58CV(A,X)155–22	57,500	12.9	16.5	1,625	1,300

See notes on page 33

COMBINATION RATINGS CONTINUED

AHRI Ref. Number	Model Number	Indoor Coil Model Number	Furnace Model Number	AHRI Standard Ratings – Cooling				
				Cooling Capacity	EER	SEER	ID CFM	
							High	Low
4647248	24ANB160A**30	CAP**6024A**+UI	58MV(B,C)080–20	57,000	11.7	15.2	1,625	1,300
4647249	24ANB160A**30	CAP**6024A**+UI	58MV(B,C)100–20	57,000	12.0	15.5	1,625	1,300
4647250	24ANB160A**30	CAP**6024A**+UI	58MV(B,C)120–20	57,000	12.4	15.7	1,625	1,300
4739781	24ANB160A**30	CAP**6024A**+UI	59*N*A100V21**20	57,000	12.0	15.5	1,625	1,300
4739782	24ANB160A**30	CAP**6024A**+UI	59*N*A120V24**22	57,000	12.4	15.7	1,625	1,300
4647179	24ANB160A**30	CAP**6025A**	58HDV080––20	57,500	11.8	15.4	1,845	1,445
4647180	24ANB160A**30	CAP**6025A**	58HDV100––20	57,500	11.8	15.2	1,775	1,415
4647177	24ANB160A**30	CAP**6025A**	58MEC100–20	57,500	12.2	15.7	1,630	1,430
4647178	24ANB160A**30	CAP**6025A**	58MEC120–20	57,500	12.5	15.7	1,640	1,450
4647175	24ANB160A**30	CAP**6025A**	58PH*110–20	58,000	12.5	15.7	1,685	1,410
4647176	24ANB160A**30	CAP**6025A**	58PH*135–20	57,500	12.2	15.7	1,650	1,430
4647172	24ANB160A**30	CAP**6025A**	58UVB080–20	57,000	11.5	15.2	1,730	1,310
4647173	24ANB160A**30	CAP**6025A**	58UVB100–20	57,000	11.7	15.0	1,660	1,395
4647174	24ANB160A**30	CAP**6025A**	58UVB120–20	57,500	12.0	15.5	1,680	1,360
4647182	24ANB160A**30	CAP**6025A**	58VLR120–20	57,500	12.0	15.7	1,735	910
4647181	24ANB160A**30	CAP**6025A**	58VMR120–20	57,000	11.7	15.5	1,740	900
4739796	24ANB160A**30	CAP**6025A**	59*P5A120E24**22	57,500	12.5	15.7	1,640	1,310
4647234	24ANB160A**30	CAP**6025A**	OVLAAB060154	57,500	12.2	16.0	1,670	1,330
4647171	24ANB160A**30	CAP**6025A**+TDR		57,500	11.8	14.5	1,750	1,400
4647257	24ANB160A**30	CAP**6025A**+UI	58CV(A,X)110–20	57,500	12.2	16.0	1,625	1,300
4647258	24ANB160A**30	CAP**6025A**+UI	58CV(A,X)135–22	57,500	12.5	16.2	1,625	1,300
4647259	24ANB160A**30	CAP**6025A**+UI	58CV(A,X)155–22	57,500	12.7	16.2	1,625	1,300
4647254	24ANB160A**30	CAP**6025A**+UI	58MV(B,C)080–20	57,000	11.7	15.2	1,625	1,300
4647255	24ANB160A**30	CAP**6025A**+UI	58MV(B,C)100–20	57,000	12.0	15.5	1,625	1,300
4647256	24ANB160A**30	CAP**6025A**+UI	58MV(B,C)120–20	57,000	12.2	15.7	1,625	1,300
4739783	24ANB160A**30	CAP**6025A**+UI	59*N*A100V21**20	57,000	12.0	15.5	1,625	1,300
4739784	24ANB160A**30	CAP**6025A**+UI	59*N*A120V24**22	57,000	12.2	15.7	1,625	1,300
4647210	24ANB160A**30	CNPH*6024A**	58HDV080––20	57,500	11.5	15.2	1,860	1,455
4647211	24ANB160A**30	CNPH*6024A**	58HDV100––20	57,500	11.7	15.5	1,785	1,425
4647207	24ANB160A**30	CNPH*6024A**	58MEC080–16	57,000	12.0	15.0	1,600	1,465
4647208	24ANB160A**30	CNPH*6024A**	58MEC100–20	57,500	12.2	15.7	1,645	1,445
4647209	24ANB160A**30	CNPH*6024A**	58MEC120–20	57,500	12.5	15.7	1,655	1,460
4647206	24ANB160A**30	CNPH*6024A**	58PH*110–20	57,500	12.7	16.2	1,700	1,425
4647243	24ANB160A**30	CNPH*6024A**	58PH*135–20	57,500	12.6	15.7	1,670	1,450
4647213	24ANB160A**30	CNPH*6024A**	58VLR120–20	57,500	12.0	15.7	1,735	910
4647212	24ANB160A**30	CNPH*6024A**	58VMR120–20	57,000	11.7	15.7	1,740	900
4739799	24ANB160A**30	CNPH*6024A**	59*P5A120E24**22	57,500	12.5	15.7	1,655	1,325
4647237	24ANB160A**30	CNPH*6024A**	OVLAAB060154	57,500	12.2	16.0	1,670	1,330
4647205	24ANB160A**30	CNPH*6024A**+TDR		57,500	12.3	14.8	1,750	1,400
4647275	24ANB160A**30	CNPH*6024A**+UI	58CV(A,X)110–20	57,500	12.6	16.0	1,625	1,300
4647276	24ANB160A**30	CNPH*6024A**+UI	58CV(A,X)135–22	57,500	12.8	16.2	1,625	1,300
4647277	24ANB160A**30	CNPH*6024A**+UI	58CV(A,X)155–22	57,500	13.0	16.5	1,625	1,300
4647272	24ANB160A**30	CNPH*6024A**+UI	58MV(B,C)080–20	57,000	12.0	15.5	1,625	1,300
4647273	24ANB160A**30	CNPH*6024A**+UI	58MV(B,C)100–20	57,000	12.2	15.5	1,625	1,300
4647274	24ANB160A**30	CNPH*6024A**+UI	58MV(B,C)120–20	57,000	12.5	16.0	1,625	1,300
4739789	24ANB160A**30	CNPH*6024A**+UI	59*N*A100V21**20	57,000	12.1	15.5	1,625	1,300
4739790	24ANB160A**30	CNPH*6024A**+UI	59*N*A120V24**22	57,000	12.5	16.0	1,625	1,300
4647219	24ANB160A**30	CNPH*6124A**	58HDV080––20	58,000	11.7	15.2	1,840	1,440
4647220	24ANB160A**30	CNPH*6124A**	58HDV100––20	58,000	12.1	15.5	1,765	1,410
4647216	24ANB160A**30	CNPH*6124A**	58MEC080–16	57,500	12.2	15.0	1,585	1,450
4647217	24ANB160A**30	CNPH*6124A**	58MEC100–20	57,500	12.2	15.7	1,625	1,425
4647218	24ANB160A**30	CNPH*6124A**	58MEC120–20	58,000	12.5	15.7	1,630	1,440
4647240	24ANB160A**30	CNPH*6124A**	58PH*110–20	58,000	12.7	16.2	1,675	1,400
4647215	24ANB160A**30	CNPH*6124A**	58PH*135–20	58,500	11.8	15.9	1,965	1,445
4647222	24ANB160A**30	CNPH*6124A**	58VLR120–20	58,000	12.0	15.7	1,735	910
4647221	24ANB160A**30	CNPH*6124A**	58VMR120–20	57,500	11.7	15.7	1,740	900
4739800	24ANB160A**30	CNPH*6124A**	59*P5A120E24**22	58,000	12.5	15.7	1,630	1,300
4647238	24ANB160A**30	CNPH*6124A**	OVLAAB060154	58,000	12.2	16.0	1,670	1,330
4647214	24ANB160A**30	CNPH*6124A**+TDR		58,000	12.3	14.9	1,750	1,400
4647281	24ANB160A**30	CNPH*6124A**+UI	58CV(A,X)110–20	57,500	12.6	16.0	1,625	1,300
4647282	24ANB160A**30	CNPH*6124A**+UI	58CV(A,X)135–22	58,000	12.8	16.2	1,625	1,300
4647283	24ANB160A**30	CNPH*6124A**+UI	58CV(A,X)155–22	58,000	13.0	16.5	1,625	1,300
4647278	24ANB160A**30	CNPH*6124A**+UI	58MV(B,C)080–20	57,000	12.0	15.5	1,625	1,300
4647279	24ANB160A**30	CNPH*6124A**+UI	58MV(B,C)100–20	57,500	12.2	15.5	1,625	1,300
4647280	24ANB160A**30	CNPH*6124A**+UI	58MV(B,C)120–20	57,500	12.5	15.7	1,625	1,300
4739791	24ANB160A**30	CNPH*6124A**+UI	59*N*A100V21**20	57,500	12.1	15.5	1,625	1,300
4739792	24ANB160A**30	CNPH*6124A**+UI	59*N*A120V24**22	57,500	12.5	15.7	1,625	1,300
4647190	24ANB160A**30	CNPV*6024A**	58HDV080––20	57,500	11.5	15.2	1,860	1,455
4647191	24ANB160A**30	CNPV*6024A**	58HDV100––20	57,500	11.7	15.5	1,785	1,425
4647188	24ANB160A**30	CNPV*6024A**	58MEC100–20	57,500	12.2	15.7	1,645	1,445
4647189	24ANB160A**30	CNPV*6024A**	58MEC120–20	57,500	12.5	15.7	1,655	1,460

See notes on page 33

COMBINATION RATINGS CONTINUED

AHRI Ref. Number	Model Number	Indoor Coil Model Number	Furnace Model Number	AHRI Standard Ratings – Cooling				
				Cooling Capacity	EER	SEER	ID CFM	
							High	Low
4647187	24ANB160A**30	CNPV*6024A**	58PH*110–20	57,500	12.7	16.0	1,700	1,425
4647241	24ANB160A**30	CNPV*6024A**	58PH*135–20	57,500	12.6	15.9	1,670	1,450
4647184	24ANB160A**30	CNPV*6024A**	58UVB080–20	57,000	11.5	15.2	1,730	1,310
4647185	24ANB160A**30	CNPV*6024A**	58UVB100–20	57,000	12.0	15.4	1,660	1,395
4647186	24ANB160A**30	CNPV*6024A**	58UVB120–20	57,000	12.3	15.8	1,680	1,360
4647193	24ANB160A**30	CNPV*6024A**	58VLR120–20	57,500	12.3	16.0	1,735	910
4647192	24ANB160A**30	CNPV*6024A**	58VMR120–20	57,000	12.0	15.7	1,740	900
4739797	24ANB160A**30	CNPV*6024A**	59*P5A120E24**22	57,500	12.5	16.0	1,655	1,325
4647235	24ANB160A**30	CNPV*6024A**	OVLAAB060154	57,500	12.2	16.0	1,670	1,330
4647183	24ANB160A**30	CNPV*6024A**+TDR		57,500	12.3	14.8	1,750	1,400
4647263	24ANB160A**30	CNPV*6024A**+UI	58CV(A,X)110–20	57,500	12.6	16.0	1,625	1,300
4647264	24ANB160A**30	CNPV*6024A**+UI	58CV(A,X)135–22	57,500	12.8	16.2	1,625	1,300
4647265	24ANB160A**30	CNPV*6024A**+UI	58CV(A,X)155–22	57,500	13.0	16.5	1,625	1,300
4647260	24ANB160A**30	CNPV*6024A**+UI	58MV(B,C)080–20	57,000	12.0	15.5	1,625	1,300
4647261	24ANB160A**30	CNPV*6024A**+UI	58MV(B,C)100–20	57,000	12.2	15.5	1,625	1,300
4647262	24ANB160A**30	CNPV*6024A**+UI	58MV(B,C)120–20	57,000	12.5	16.0	1,625	1,300
4739785	24ANB160A**30	CNPV*6024A**+UI	59*N*A100V21**20	57,000	12.2	15.5	1,625	1,300
4739786	24ANB160A**30	CNPV*6024A**+UI	59*N*A120V24**22	57,000	12.5	16.0	1,625	1,300
4647201	24ANB160A**30	CNPV*6124A**	58HDV080––20	58,500	11.7	15.5	1,870	1,460
4647202	24ANB160A**30	CNPV*6124A**	58HDV100––20	58,500	12.0	15.7	1,790	1,430
4647199	24ANB160A**30	CNPV*6124A**	58MEC100–20	58,500	12.5	16.0	1,650	1,450
4647200	24ANB160A**30	CNPV*6124A**	58MEC120–20	58,500	12.5	16.0	1,660	1,470
4647198	24ANB160A**30	CNPV*6124A**	58PH*110–20	58,500	12.8	16.4	1,710	1,435
4647242	24ANB160A**30	CNPV*6124A**	58PH*135–20	58,500	12.7	16.1	1,675	1,455
4647195	24ANB160A**30	CNPV*6124A**	58UVB080–20	58,000	11.7	15.7	1,730	1,310
4647196	24ANB160A**30	CNPV*6124A**	58UVB100–20	58,000	12.2	15.5	1,660	1,395
4647197	24ANB160A**30	CNPV*6124A**	58UVB120–20	58,000	12.5	16.0	1,680	1,360
4647204	24ANB160A**30	CNPV*6124A**	58VLR120–20	58,500	12.5	16.3	1,735	910
4647203	24ANB160A**30	CNPV*6124A**	58VMR120–20	58,000	12.1	16.0	1,740	900
4739798	24ANB160A**30	CNPV*6124A**	59*P5A120E24**22	58,500	12.5	16.0	1,660	1,335
4647236	24ANB160A**30	CNPV*6124A**	OVLAAB060154	58,500	12.5	16.2	1,670	1,330
4647194	24ANB160A**30	CNPV*6124A**+TDR		58,500	12.4	15.0	1,750	1,400
4647269	24ANB160A**30	CNPV*6124A**+UI	58CV(A,X)110–20	58,000	12.8	16.2	1,625	1,300
4647270	24ANB160A**30	CNPV*6124A**+UI	58CV(A,X)135–22	58,500	13.0	16.5	1,625	1,300
4647271	24ANB160A**30	CNPV*6124A**+UI	58CV(A,X)155–22	58,500	13.1	16.7	1,625	1,300
4647266	24ANB160A**30	CNPV*6124A**+UI	58MV(B,C)080–20	57,500	12.0	15.7	1,625	1,300
4647267	24ANB160A**30	CNPV*6124A**+UI	58MV(B,C)100–20	58,000	12.4	15.7	1,625	1,300
4647268	24ANB160A**30	CNPV*6124A**+UI	58MV(B,C)120–20	58,000	12.6	16.0	1,625	1,300
4739787	24ANB160A**30	CNPV*6124A**+UI	59*N*A100V21**20	58,000	12.3	15.7	1,625	1,300
4739788	24ANB160A**30	CNPV*6124A**+UI	59*N*A120V24**22	58,000	12.6	16.0	1,625	1,300
4647228	24ANB160A**30	CSPH*6012A**	58HDV080––20	58,000	11.7	15.2	1,870	1,455
4647229	24ANB160A**30	CSPH*6012A**	58HDV100––20	58,000	11.7	15.5	1,795	1,425
4647225	24ANB160A**30	CSPH*6012A**	58MEC080–16	57,500	12.2	15.2	1,605	1,470
4647226	24ANB160A**30	CSPH*6012A**	58MEC100–20	58,000	12.5	15.7	1,650	1,445
4647227	24ANB160A**30	CSPH*6012A**	58MEC120–20	58,000	12.5	16.0	1,660	1,465
4647224	24ANB160A**30	CSPH*6012A**	58PH*110–20	58,000	12.7	16.3	1,710	1,425
4647244	24ANB160A**30	CSPH*6012A**	58PH*135–20	58,000	12.7	16.0	1,675	1,450
4647231	24ANB160A**30	CSPH*6012A**	58VLR120–20	58,000	12.2	16.0	1,735	910
4647230	24ANB160A**30	CSPH*6012A**	58VMR120–20	57,500	12.1	16.0	1,740	900
4739801	24ANB160A**30	CSPH*6012A**	59*P5A120E24**22	58,000	12.5	16.0	1,665	1,325
4647239	24ANB160A**30	CSPH*6012A**	OVLAAB060154	58,000	12.5	16.0	1,670	1,330
4647223	24ANB160A**30	CSPH*6012A**+TDR		58,000	12.3	14.9	1,750	1,400
4647287	24ANB160A**30	CSPH*6012A**+UI	58CV(A,X)110–20	57,500	12.7	16.2	1,625	1,300
4647288	24ANB160A**30	CSPH*6012A**+UI	58CV(A,X)135–22	58,000	12.9	16.5	1,625	1,300
4647289	24ANB160A**30	CSPH*6012A**+UI	58CV(A,X)155–22	58,000	13.1	16.5	1,625	1,300
4647284	24ANB160A**30	CSPH*6012A**+UI	58MV(B,C)080–20	57,500	12.2	15.5	1,625	1,300
4647285	24ANB160A**30	CSPH*6012A**+UI	58MV(B,C)100–20	57,500	12.3	15.7	1,625	1,300
4647286	24ANB160A**30	CSPH*6012A**+UI	58MV(B,C)120–20	57,500	12.5	16.0	1,625	1,300
4739793	24ANB160A**30	CSPH*6012A**+UI	59*N*A100V21**20	57,500	12.2	15.7	1,625	1,300
4739794	24ANB160A**30	CSPH*6012A**+UI	59*N*A120V24**22	57,500	12.5	16.0	1,625	1,300
4647232	24ANB160A**30	FV4CNB006		59,000	13.1	16.5	1,750	1,400

EER — Energy Efficiency Ratio
SEER — Seasonal Energy Efficiency Ratio
TDR — Time–Delay Relay. In most cases, only 1 method should be used to achieve TDR function. Using more than 1 method in a system may cause degradation in performance. Use either the accessory Time–Delay Relay KAATD0101TDR or a furnace equipped with TDR. Most Carrier furnaces are equipped with TDR.
UI — User Interface

NOTES:
1. Ratings are net values reflecting the effects of circulating fan motor heat. Supplemental electric heat is not included.
2. Tested outdoor/indoor combinations have been tested in accordance with DOE test procedures for central air conditioners. Ratings for other combinations are determined under DOE computer simulation procedures.
3. Determine actual CFM values obtainable for your system by referring to fan performance data in fan coil or furnace coil literature.
4. Do not apply with capillary tube coils as performance and reliability are affected.

DETAILED COOLING CAPACITIES#

24ANB1

EVAPORATOR AIR		CONDENSER ENTERING AIR TEMPERATURES °F (°C)																	
		75 (23.9)			85 (29.4)			95 (35)			105 (40.6)			115 (46.1)			125 (51.7)		
CFM	EWB °F (°C)	Capacity MBtuh		Total Sys. KW**	Capacity MBtuh		Total Sys. KW**	Capacity MBtuh		Total Sys. KW**	Capacity MBtuh		Total Sys. KW**	Capacity MBtuh		Total Sys. KW**	Capacity MBtuh		Total Sys. KW**
		Total	Sens‡		Total	Sens‡		Total	Sens‡		Total	Sens‡		Total	Sens‡		Total	Sens‡	
24ANB124A30 Outdoor Section With FE5ANB004 Indoor Section High**																			
600	57 (13.9)	23.20	23.20	1.44	22.56	22.56	1.61	21.84	21.84	1.78	21.04	21.04	1.97	20.15	20.15	2.18	19.16	19.16	2.42
	62 (16.7)	24.71	21.27	1.45	23.80	20.91	1.61	22.81	20.52	1.79	21.72	20.09	1.98	20.54	19.62	2.19	19.25	19.09	2.42
	63 (17.2)††	25.25	17.63	1.45	24.32	17.24	1.62	23.31	16.82	1.79	22.20	16.36	1.98	20.98	15.87	2.19	19.63	15.33	2.42
	67 (19.4)	27.32	18.31	1.46	26.32	17.92	1.63	25.23	17.50	1.81	24.03	17.05	2.00	22.71	16.56	2.20	21.27	16.02	2.44
	72 (22.2)	30.22	15.27	1.49	29.11	14.86	1.65	27.90	14.41	1.83	26.58	13.93	2.02	25.14	13.42	2.23	23.56	12.86	2.46
650	57 (13.9)	23.95	23.95	1.45	23.27	23.27	1.61	22.51	22.51	1.79	21.68	21.68	1.98	20.74	20.74	2.19	19.69	19.69	2.43
	62 (16.7)	25.18	22.28	1.46	24.24	21.92	1.62	23.21	21.52	1.80	22.09	21.09	1.99	20.88	20.61	2.19	19.73	19.73	2.43
	63 (17.2)††	25.73	18.34	1.46	24.76	17.94	1.62	23.71	17.51	1.80	22.55	17.05	1.99	21.29	16.55	2.20	19.91	16.01	2.43
	67 (19.4)	27.84	19.06	1.47	26.79	18.66	1.64	25.65	18.24	1.81	24.40	17.78	2.00	23.04	17.29	2.21	21.56	16.75	2.44
	72 (22.2)	30.76	15.76	1.49	29.60	15.34	1.66	28.35	14.89	1.83	26.98	14.40	2.02	25.49	13.88	2.23	23.86	13.32	2.47
700	57 (13.9)	24.64	24.64	1.46	23.92	23.92	1.62	23.13	23.13	1.80	22.25	22.25	1.99	21.27	21.27	2.20	20.18	20.18	2.44
	62 (16.7)	25.60	23.27	1.46	24.63	22.90	1.63	23.57	22.50	1.80	22.42	22.06	1.99	21.31	21.31	2.20	20.21	20.21	2.44
	63 (17.2)††	26.15	19.02	1.47	25.15	18.63	1.63	24.05	18.19	1.81	22.86	17.73	2.00	21.56	17.22	2.20	20.14	16.67	2.44
	67 (19.4)	28.28	19.79	1.48	27.19	19.39	1.65	26.01	18.97	1.82	24.73	18.51	2.01	23.33	18.01	2.22	21.80	17.46	2.45
	72 (22.2)	31.24	16.24	1.50	30.04	15.81	1.67	28.73	15.35	1.84	27.32	14.87	2.03	25.79	14.34	2.24	24.11	13.78	2.47
800	57 (13.9)	25.86	25.86	1.47	25.08	25.08	1.64	24.22	24.22	1.82	23.27	23.27	2.01	22.21	22.21	2.22	21.03	21.03	2.45
	62 (16.7)	26.32	25.19	1.48	25.30	24.81	1.64	24.26	24.26	1.82	23.31	23.31	2.01	22.25	22.25	2.22	21.06	21.06	2.45
	63 (17.2)††	26.85	20.36	1.48	25.78	19.95	1.65	24.62	19.52	1.82	23.37	19.04	2.01	22.01	18.53	2.22	20.53	17.98	2.45
	67 (19.4)	29.01	21.22	1.50	27.85	20.81	1.66	26.60	20.38	1.83	25.25	19.92	2.02	23.79	19.41	2.23	22.19	18.87	2.46
	72 (22.2)	32.01	17.15	1.52	30.74	16.72	1.68	29.36	16.26	1.86	27.88	15.77	2.04	26.27	15.24	2.25	24.53	14.67	2.49

EVAPORATOR AIR		CONDENSER ENTERING AIR TEMPERATURES °F (°C)																	
		75 (23.9)			85 (29.4)			95 (35)			105 (40.6)			115 (46.1)			125 (51.7)		
CFM	EWB °F (°C)	Capacity MBtuh		Total Sys. KW**	Capacity MBtuh		Total Sys. KW**	Capacity MBtuh		Total Sys. KW**	Capacity MBtuh		Total Sys. KW**	Capacity MBtuh		Total Sys. KW**	Capacity MBtuh		Total Sys. KW**
		Total	Sens‡		Total	Sens‡		Total	Sens‡		Total	Sens‡		Total	Sens‡		Total	Sens‡	
24ANB124A30 Outdoor Section With FE5ANB004 Indoor Section Low**																			
480	57 (13.9)	18.65	18.65	0.90	17.97	17.97	1.06	17.24	17.24	1.24	16.44	16.44	1.44	15.58	15.58	1.68	14.63	14.63	1.96
	62 (16.7)	19.73	17.41	0.91	18.82	16.98	1.06	17.83	16.52	1.24	16.78	16.03	1.44	15.66	15.52	1.68	14.66	14.66	1.96
	63 (17.2)††	20.21	14.36	0.91	19.27	13.92	1.07	18.26	13.46	1.24	17.18	12.98	1.44	16.02	12.46	1.68	14.77	11.92	1.96
	67 (19.4)	22.07	15.01	0.92	21.06	14.57	1.07	19.97	14.11	1.25	18.81	13.62	1.45	17.56	13.11	1.69	16.21	12.56	1.97
	72 (22.2)	24.73	12.57	0.93	23.61	12.13	1.09	22.42	11.67	1.26	21.13	11.18	1.46	19.76	10.66	1.70	18.27	10.11	1.98
520	57 (13.9)	19.30	19.30	0.91	18.59	18.59	1.07	17.81	17.81	1.24	16.98	16.98	1.45	16.07	16.07	1.69	15.08	15.08	1.97
	62 (16.7)	20.14	18.28	0.91	19.19	17.83	1.07	18.18	17.36	1.24	17.10	16.87	1.45	16.10	16.10	1.69	15.11	15.11	1.97
	63 (17.2)††	20.61	14.96	0.91	19.64	14.52	1.07	18.59	14.05	1.25	17.47	13.56	1.45	16.28	13.03	1.69	14.99	12.48	1.97
	67 (19.4)	22.52	15.66	0.92	21.46	15.21	1.08	20.34	14.74	1.25	19.13	14.24	1.46	17.84	13.72	1.69	16.45	13.16	1.97
	72 (22.2)	25.22	13.01	0.94	24.07	12.56	1.09	22.82	12.08	1.27	21.50	11.58	1.47	20.07	11.06	1.70	18.54	10.50	1.98
560	57 (13.9)	19.90	19.90	0.91	19.15	19.15	1.07	18.34	18.34	1.25	17.47	17.47	1.45	16.52	16.52	1.69	15.49	15.49	1.97
	62 (16.7)	20.50	19.12	0.92	19.53	18.67	1.07	18.49	18.19	1.25	17.51	17.51	1.45	16.56	16.56	1.69	15.52	15.52	1.97
	63 (17.2)††	20.97	15.56	0.92	19.96	15.10	1.08	18.89	14.63	1.25	17.74	14.12	1.45	16.51	13.59	1.69	15.19	13.03	1.97
	67 (19.4)	22.91	16.30	0.93	21.82	15.84	1.08	20.66	15.36	1.26	19.41	14.85	1.46	18.08	14.32	1.70	16.66	13.76	1.98
	72 (22.2)	25.66	13.42	0.95	24.46	12.97	1.10	23.18	12.49	1.27	21.81	11.98	1.47	20.34	11.44	1.71	18.77	10.88	1.98
640	57 (13.9)	20.97	20.97	0.93	20.16	20.16	1.08	19.29	19.29	1.26	18.35	18.35	1.46	17.33	17.33	1.70	16.22	16.22	1.98
	62 (16.7)	21.15	20.77	0.93	20.20	20.20	1.08	19.32	19.32	1.26	18.38	18.38	1.46	17.36	17.36	1.70	16.24	16.24	1.98
	63 (17.2)††	21.57	16.71	0.93	20.51	16.24	1.08	19.38	15.75	1.26	18.17	15.23	1.46	16.88	14.69	1.70	15.51	14.11	1.98
	67 (19.4)	23.56	17.53	0.94	22.41	17.06	1.09	21.18	16.57	1.27	19.88	16.05	1.47	18.49	15.50	1.71	17.00	14.92	1.99
	72 (22.2)	26.38	14.23	0.96	25.11	13.76	1.11	23.76	13.27	1.28	22.32	12.75	1.48	20.78	12.20	1.71	19.14	11.62	1.99

See notes on page 48

DETAILED COOLING CAPACITIES# (CONTINUED)

24ANB124A30 Outdoor Section With FE5ANB004 Indoor Section**

Cooling Indoor Model	High Speed Cap.	Power	Low Speed Cap.	Power	Furnace Model
*FE5ANB004	1.00	1.00	1.00	1.00	
CAP**2414A**	0.93	1.12	0.91	1.19	
CAP**2417A**	0.93	1.12	0.91	1.19	
CAP**3014A**	0.94	1.13	0.91	1.19	
CAP**3017A**	0.94	1.13	0.91	1.19	
CAP**3614A**	0.95	1.14	0.91	1.19	
CAP**3617A**	0.95	1.14	0.91	1.19	
CAP**3619A**	0.95	1.14	0.91	1.19	
CAP**3621A**	0.95	1.14	0.91	1.19	
CNPH*2417A**	0.93	1.12	0.91	1.19	
CNPH*3017A**	0.94	1.13	0.91	1.19	
CNPH*3117A**	0.96	1.14	0.92	1.19	
CNPH*3617A**	0.94	1.13	0.91	1.19	
CNPV*2414A**	0.93	1.12	0.91	1.19	
CNPV*2417A**	0.93	1.12	0.91	1.19	
CNPV*3014A**	0.94	1.13	0.91	1.19	
CNPV*3017A**	0.94	1.13	0.91	1.19	
CNPV*3117A**	0.96	1.13	0.92	1.19	
CNPV*3617A**	0.94	1.13	0.91	1.19	
CNPV*3621A**	0.94	1.13	0.91	1.19	
CNPV*3717A**	0.97	1.13	0.93	1.19	
CSPH*2412A**	0.95	1.12	0.91	1.19	
CSPH*3012A**	0.95	1.12	0.92	1.20	
CSPH*3612A**	0.96	1.14	0.92	1.19	
FE4AN(B,F)003	0.97	1.00	0.97	1.01	
FE4ANF002	0.97	1.02	0.97	1.04	
FV4CN(B,F)003	0.95	0.99	0.91	0.96	
FV4CNF002	0.95	1.00	0.91	0.97	
CAP**2414A**	0.95	1.02	0.96	1.07	58CV(A,X)070–12
CAP**2417A**	0.95	1.02	0.96	1.06	58CV(A,X)070–12
CAP**3014A**	0.96	1.02	0.96	1.06	58CV(A,X)070–12
CAP**3017A**	0.96	1.02	0.96	1.05	58CV(A,X)070–12
CAP**3614A**	0.96	1.02	0.96	1.06	58CV(A,X)070–12
CAP**3617A**	0.97	1.02	0.96	1.05	58CV(A,X)070–12
CNPH*2417A**	0.95	1.02	0.96	1.08	58CV(A,X)070–12
CNPH*3017A**	0.96	1.02	0.96	1.05	58CV(A,X)070–12
CNPH*3117A**	0.98	1.02	0.98	1.05	58CV(A,X)070–12
CNPH*3617A**	0.96	1.02	0.96	1.05	58CV(A,X)070–12
CNPV*2414A**	0.95	1.02	0.96	1.08	58CV(A,X)070–12
CNPV*2417A**	0.95	1.02	0.96	1.08	58CV(A,X)070–12
CNPV*3014A**	0.96	1.03	0.96	1.07	58CV(A,X)070–12
CNPV*3017A**	0.96	1.02	0.96	1.05	58CV(A,X)070–12
CNPV*3117A**	0.98	1.02	0.98	1.06	58CV(A,X)070–12
CNPV*3617A**	0.96	1.02	0.96	1.05	58CV(A,X)070–12
CNPV*3717A**	0.99	1.01	0.99	1.05	58CV(A,X)070–12
CSPH*2412A**	0.97	1.04	0.97	1.08	58CV(A,X)070–12
CSPH*3012A**	0.97	1.02	0.97	1.07	58CV(A,X)070–12
CSPH*3612A**	0.98	1.02	0.98	1.06	58CV(A,X)070–12
CAP**2417A**	0.95	1.01	0.96	1.04	58CV(A,X)090–16
CAP**3017A**	0.96	1.02	0.96	1.03	58CV(A,X)090–16
CAP**3617A**	0.97	1.00	0.97	1.03	58CV(A,X)090–16
CAP**3619A**	0.97	1.00	0.97	1.03	58CV(A,X)090–16
CAP**3621A**	0.97	1.00	0.97	1.02	58CV(A,X)090–16
CNPH*2417A**	0.95	1.02	0.96	1.06	58CV(A,X)090–16
CNPH*3017A**	0.97	1.02	0.96	1.03	58CV(A,X)090–16
CNPH*3117A**	0.98	1.01	0.98	1.03	58CV(A,X)090–16
CNPH*3617A**	0.97	1.02	0.96	1.03	58CV(A,X)090–16
CNPV*2417A**	0.95	1.02	0.96	1.06	58CV(A,X)090–16
CNPV*3017A**	0.97	1.02	0.96	1.03	58CV(A,X)090–16
CNPV*3117A**	0.98	1.01	0.98	1.03	58CV(A,X)090–16
CNPV*3617A**	0.97	1.02	0.96	1.03	58CV(A,X)090–16

Cooling Indoor Model	High Speed Cap.	Power	Low Speed Cap.	Power	Furnace Model
CNPV*3621A**	0.97	1.02	0.96	1.03	58CV(A,X)090–16
CNPV*3717A**	1.00	1.02	0.99	1.03	58CV(A,X)090–16
CSPH*2412A**	0.97	1.02	0.97	1.07	58CV(A,X)090–16
CSPH*3012A**	0.97	1.02	0.97	1.05	58CV(A,X)090–16
CSPH*3612A**	0.98	1.01	0.98	1.04	58CV(A,X)090–16
CAP**3619A**	0.97	1.02	0.97	1.04	58CV(A,X)110–20
CAP**3621A**	0.97	1.00	0.97	1.03	58CV(A,X)110–20
CNPH*2417A**	0.95	1.02	0.96	1.08	58CV(A,X)110–20
CNPH*3017A**	0.96	1.02	0.96	1.04	58CV(A,X)110–20
CNPH*3117A**	0.98	1.01	0.98	1.04	58CV(A,X)110–20
CNPH*3617A**	0.96	1.02	0.96	1.04	58CV(A,X)110–20
CNPV*3621A**	0.96	1.02	0.96	1.04	58CV(A,X)110–20
CSPH*2412A**	0.96	1.03	0.97	1.09	58CV(A,X)110–20
CSPH*3012A**	0.97	1.02	0.97	1.06	58CV(A,X)110–20
CSPH*3612A**	0.98	1.02	0.98	1.05	58CV(A,X)110–20
CNPH*2417A**	0.95	1.02	0.96	1.07	58CV(A,X)135–22
CNPH*3017A**	0.97	1.02	0.96	1.03	58CV(A,X)135–22
CNPH*3117A**	0.98	1.01	0.98	1.03	58CV(A,X)135–22
CNPH*3617A**	0.97	1.02	0.96	1.03	58CV(A,X)135–22
CSPH*2412A**	0.97	1.02	0.97	1.07	58CV(A,X)135–22
CSPH*3012A**	0.97	1.02	0.97	1.05	58CV(A,X)135–22
CSPH*3612A**	0.98	1.01	0.98	1.03	58CV(A,X)135–22
CNPH*2417A**	0.95	1.02	0.96	1.06	58CV(A,X)155–22
CNPH*3017A**	0.97	1.00	0.97	1.03	58CV(A,X)155–22
CNPH*3117A**	0.98	1.01	0.98	1.02	58CV(A,X)155–22
CNPH*3617A**	0.97	1.00	0.97	1.03	58CV(A,X)155–22
CSPH*2412A**	0.97	1.02	0.97	1.06	58CV(A,X)155–22
CSPH*3012A**	0.97	1.00	0.97	1.04	58CV(A,X)155–22
CSPH*3612A**	0.98	1.01	0.98	1.03	58CV(A,X)155–22
CAP**2417A**	0.94	1.04	0.91	1.00	58HDV040––12
CAP**3017A**	0.95	1.05	0.91	1.00	58HDV040––12
CAP**3617A**	0.95	1.05	0.91	1.00	58HDV040––12
CAP**3619A**	0.95	1.05	0.91	1.00	58HDV040––12
CAP**3621A**	0.96	1.05	0.91	1.00	58HDV040––12
CNPH*2417A**	0.95	1.10	0.92	1.05	58HDV040––12
CNPH*3017A**	0.95	1.04	0.91	1.00	58HDV040––12
CNPH*3117A**	0.97	1.04	0.93	1.01	58HDV040––12
CNPH*3617A**	0.95	1.04	0.91	1.00	58HDV040––12
CNPV*2417A**	0.95	1.10	0.92	1.05	58HDV040––12
CNPV*3017A**	0.95	1.04	0.91	1.00	58HDV040––12
CNPV*3117A**	0.97	1.04	0.93	1.01	58HDV040––12
CNPV*3617A**	0.95	1.04	0.91	1.00	58HDV040––12
CNPV*3621A**	0.95	1.05	0.91	1.01	58HDV040––12
CNPV*3717A**	0.98	1.04	0.94	1.00	58HDV040––12
CSPH*2412A**	0.96	1.09	0.93	1.06	58HDV040––12
CSPH*3012A**	0.95	1.05	0.91	1.00	58HDV040––12
CSPH*3612A**	0.97	1.04	0.92	1.00	58HDV040––12
CAP**2417A**	0.95	1.04	0.91	1.01	58HDV060––12
CAP**3017A**	0.96	1.05	0.92	1.02	58HDV060––12
CAP**3617A**	0.96	1.05	0.93	1.02	58HDV060––12
CAP**3619A**	0.96	1.05	0.93	1.02	58HDV060––12
CAP**3621A**	0.97	1.06	0.93	1.02	58HDV060––12
CNPH*2417A**	0.94	1.04	0.91	1.01	58HDV060––12
CNPH*3017A**	0.96	1.05	0.92	1.02	58HDV060––12
CNPH*3117A**	0.98	1.06	0.95	1.02	58HDV060––12
CNPH*3617A**	0.96	1.05	0.92	1.02	58HDV060––12
CNPV*2417A**	0.94	1.04	0.91	1.01	58HDV060––12
CNPV*3017A**	0.96	1.05	0.92	1.02	58HDV060––12
CNPV*3117A**	0.98	1.06	0.94	1.01	58HDV060––12
CNPV*3617A**	0.96	1.05	0.92	1.02	58HDV060––12
CNPV*3621A**	0.96	1.05	0.92	1.02	58HDV060––12

Cooling Indoor Model	High Speed Cap.	Power	Low Speed Cap.	Power	Furnace Model
CNPV*3717A**	0.99	1.05	0.96	1.02	58HDV060––12
CSPH*2412A**	0.95	1.05	0.91	1.02	58HDV060––12
CSPH*3012A**	0.96	1.05	0.93	1.02	58HDV060––12
CSPH*3612A**	0.98	1.05	0.94	1.02	58HDV060––12
CNPH*2417A**	0.95	1.05	0.93	1.03	58HDV080––20
CNPH*3017A**	0.98	1.05	0.94	1.02	58HDV080––20
CNPH*3117A**	1.00	1.06	0.97	1.02	58HDV080––20
CNPH*3617A**	0.98	1.05	0.94	1.02	58HDV080––20
CNPV*3621A**	0.98	1.05	0.95	1.02	58HDV080––20
CSPH*2412A**	0.96	1.05	0.93	1.03	58HDV080––20
CSPH*3012A**	0.98	1.05	0.95	1.02	58HDV080––20
CSPH*3612A**	1.00	1.06	0.97	1.02	58HDV080––20
CNPH*2417A**	0.95	1.04	0.91	1.00	58HDV100––20
CNPH*3017A**	0.97	1.02	0.93	1.00	58HDV100––20
CNPH*3117A**	0.99	1.03	0.96	1.00	58HDV100––20
CNPH*3617A**	0.97	1.02	0.93	1.00	58HDV100––20
CSPH*2412A**	0.96	1.05	0.91	1.00	58HDV100––20
CSPH*3012A**	0.97	1.04	0.94	1.01	58HDV100––20
CSPH*3612A**	0.99	1.05	0.95	1.00	58HDV100––20
CAP**2417A**	0.95	1.01	0.93	1.00	58MEB040–12
CAP**3017A**	0.96	1.02	0.94	1.00	58MEB040–12
CAP**3617A**	0.97	1.02	0.94	1.00	58MEB040–12
CAP**3619A**	0.97	1.02	0.94	1.00	58MEB040–12
CAP**3621A**	0.97	1.00	0.95	1.00	58MEB040–12
CNPH*2417A**	0.95	1.02	0.92	0.99	58MEB040–12
CNPH*3017A**	0.96	1.02	0.94	1.00	58MEB040–12
CNPH*3117A**	0.98	1.01	0.97	1.01	58MEB040–12
CNPH*3617A**	0.96	1.02	0.94	1.00	58MEB040–12
CNPV*2417A**	0.95	1.02	0.92	0.99	58MEB040–12
CNPV*3017A**	0.96	1.02	0.94	1.00	58MEB040–12
CNPV*3117A**	0.98	1.01	0.96	1.00	58MEB040–12
CNPV*3617A**	0.96	1.02	0.94	1.00	58MEB040–12
CNPV*3621A**	0.96	1.02	0.94	1.00	58MEB040–12
CNPV*3717A**	0.99	1.01	0.97	1.00	58MEB040–12
CSPH*2412A**	0.95	1.01	0.92	0.99	58MEB040–12
CSPH*3012A**	0.96	1.02	0.94	0.99	58MEB040–12
CSPH*3612A**	0.98	1.01	0.96	1.00	58MEB040–12
CAP**2417A**	0.95	1.01	0.92	0.99	58MEC060–12
CAP**3017A**	0.96	1.02	0.93	0.99	58MEC060–12
CAP**3617A**	0.97	1.02	0.94	1.00	58MEC060–12
CAP**3619A**	0.97	1.02	0.94	1.00	58MEC060–12
CAP**3621A**	0.97	1.00	0.94	0.99	58MEC060–12
CNPH*2417A**	0.95	1.02	0.91	0.98	58MEC060–12
CNPH*3017A**	0.96	1.02	0.93	0.99	58MEC060–12
CNPH*3117A**	0.98	1.01	0.96	1.00	58MEC060–12
CNPH*3617A**	0.96	1.02	0.93	0.99	58MEC060–12
CNPV*2417A**	0.95	1.02	0.91	0.98	58MEC060–12
CNPV*3017A**	0.96	1.02	0.93	0.99	58MEC060–12
CNPV*3117A**	0.98	1.01	0.95	0.99	58MEC060–12
CNPV*3617A**	0.96	1.02	0.93	0.99	58MEC060–12
CNPV*3621A**	0.96	1.02	0.93	0.99	58MEC060–12
CNPV*3717A**	1.00	1.02	0.97	1.00	58MEC060–12
CSPH*2412A**	0.95	1.02	0.91	0.97	58MEC060–12
CSPH*3012A**	0.97	1.02	0.93	0.99	58MEC060–12
CSPH*3612A**	0.98	1.02	0.95	0.99	58MEC060–12
CAP**2417A**	0.95	1.01	0.96	1.05	58MV(B,C)060–14
CAP**3017A**	0.96	1.02	0.96	1.04	58MV(B,C)060–14
CAP**3617A**	0.97	1.02	0.97	1.05	58MV(B,C)060–14
CAP**3619A**	0.97	1.02	0.97	1.05	58MV(B,C)060–14
CAP**3621A**	0.97	1.00	0.97	1.04	58MV(B,C)060–14
CNPH*2417A**	0.95	1.02	0.96	1.08	58MV(B,C)060–14

DETAILED COOLING CAPACITIES# (CONTINUED)

24ANB124A**30 Outdoor Section With FE5ANB004 Indoor Section

Cooling Indoor Model	High Speed Cap.	Power	Low Speed Cap.	Power	Furnace Model
CNPH*3017A**	0.96	1.02	0.96	1.05	58MV(B,C)060–14
CNPH*3117A**	0.98	1.02	0.98	1.05	58MV(B,C)060–14
CNPH*3617A**	0.96	1.02	0.96	1.05	58MV(B,C)060–14
CNPV*2417A**	0.95	1.02	0.96	1.08	58MV(B,C)060–14
CNPV*3017A**	0.96	1.02	0.96	1.05	58MV(B,C)060–14
CNPV*3117A**	0.98	1.02	0.98	1.05	58MV(B,C)060–14
CNPV*3617A**	0.96	1.02	0.96	1.05	58MV(B,C)060–14
CNPV*3621A**	0.96	1.02	0.96	1.05	58MV(B,C)060–14
CNPV*3717A**	0.99	1.01	0.99	1.04	58MV(B,C)060–14
CSPH*2412A**	0.97	1.04	0.97	1.08	58MV(B,C)060–14
CSPH*3012A**	0.97	1.02	0.97	1.06	58MV(B,C)060–14
CSPH*3612A**	0.98	1.02	0.98	1.05	58MV(B,C)060–14
CAP**3619A**	0.96	1.02	0.96	1.06	58MV(B,C)080–14
CAP**3621A**	0.97	1.02	0.96	1.05	58MV(B,C)080–14
CNPH*2417A**	0.95	1.05	0.96	1.10	58MV(B,C)080–14
CNPH*3017A**	0.96	1.03	0.96	1.07	58MV(B,C)080–14
CNPH*3117A**	0.98	1.02	0.98	1.07	58MV(B,C)080–14
CNPH*3617A**	0.96	1.03	0.96	1.07	58MV(B,C)080–14
CNPV*3621A**	0.96	1.02	0.96	1.07	58MV(B,C)080–14
CSPH*2412A**	0.96	1.05	0.97	1.11	58MV(B,C)080–14
CSPH*3012A**	0.97	1.04	0.97	1.08	58MV(B,C)080–14
CSPH*3612A**	0.98	1.04	0.97	1.06	58MV(B,C)080–14
CAP**3619A**	0.96	1.02	0.96	1.06	58MV(B,C)080–20
CAP**3621A**	0.97	1.02	0.96	1.05	58MV(B,C)080–20
CNPH*2417A**	0.95	1.05	0.96	1.10	58MV(B,C)080–20
CNPH*3017A**	0.96	1.02	0.96	1.07	58MV(B,C)080–20
CNPH*3117A**	0.98	1.02	0.98	1.07	58MV(B,C)080–20
CNPH*3617A**	0.96	1.02	0.96	1.07	58MV(B,C)080–20
CNPV*3621A**	0.96	1.02	0.96	1.06	58MV(B,C)080–20
CSPH*2412A**	0.96	1.05	0.97	1.10	58MV(B,C)080–20
CSPH*3012A**	0.97	1.04	0.97	1.08	58MV(B,C)080–20
CSPH*3612A**	0.98	1.04	0.97	1.06	58MV(B,C)080–20
CAP**3619A**	0.97	1.02	0.96	1.05	58MV(B,C)100–20
CAP**3621A**	0.97	1.02	0.97	1.05	58MV(B,C)100–20
CNPH*2417A**	0.95	1.05	0.96	1.09	58MV(B,C)100–20
CNPH*3017A**	0.96	1.02	0.96	1.06	58MV(B,C)100–20
CNPH*3117A**	0.98	1.02	0.98	1.06	58MV(B,C)100–20
CNPH*3617A**	0.96	1.02	0.96	1.06	58MV(B,C)100–20
CNPV*3621A**	0.96	1.02	0.96	1.06	58MV(B,C)100–20
CSPH*2412A**	0.96	1.03	0.97	1.09	58MV(B,C)100–20
CSPH*3012A**	0.97	1.02	0.97	1.08	58MV(B,C)100–20
CSPH*3612A**	0.98	1.02	0.97	1.06	58MV(B,C)100–20
CNPH*2417A**	0.95	1.02	0.96	1.08	58MV(B,C)120–20
CNPH*3017A**	0.96	1.02	0.96	1.05	58MV(B,C)120–20
CNPH*3117A**	0.98	1.02	0.98	1.05	58MV(B,C)120–20
CNPH*3617A**	0.96	1.02	0.96	1.05	58MV(B,C)120–20
CSPH*2412A**	0.97	1.04	0.97	1.08	58MV(B,C)120–20
CSPH*3012A**	0.97	1.02	0.97	1.07	58MV(B,C)120–20
CSPH*3612A**	0.98	1.02	0.98	1.05	58MV(B,C)120–20
CNPH*2417A**	0.95	1.05	0.96	1.09	58MVB040–14
CNPH*3017A**	0.96	1.02	0.96	1.06	58MVB040–14
CNPH*3117A**	0.98	1.02	0.98	1.05	58MVB040–14
CNPH*3617A**	0.96	1.02	0.96	1.06	58MVB040–14
CSPH*2412A**	0.96	1.03	0.97	1.10	58MVB040–14
CSPH*3012A**	0.97	1.02	0.97	1.07	58MVB040–14
CSPH*3612A**	0.98	1.02	0.97	1.05	58MVB040–14
CAP**2414A**	0.94	1.03	0.91	1.00	58PH*045–08
CAP**2417A**	0.94	1.03	0.91	1.00	58PH*045–08
CAP**3014A**	0.95	1.04	0.91	1.00	58PH*045–08
CAP**3017A**	0.95	1.02	0.91	1.00	58PH*045–08
CAP**3614A**	0.95	1.02	0.91	1.00	58PH*045–08

Cooling Indoor Model	High Speed Cap.	Power	Low Speed Cap.	Power	Furnace Model
CAP**3617A**	0.95	1.02	0.91	1.00	58PH*045–08
CNPH*2417A**	0.93	1.02	0.91	1.00	58PH*045–08
CNPH*3017A**	0.95	1.02	0.91	1.00	58PH*045–08
CNPH*3117A**	0.97	1.02	0.93	1.00	58PH*045–08
CNPH*3617A**	0.95	1.02	0.91	1.00	58PH*045–08
CNPV*2414A**	0.93	1.02	0.91	1.00	58PH*045–08
CNPV*2417A**	0.93	1.02	0.91	1.00	58PH*045–08
CNPV*3014A**	0.95	1.04	0.91	1.00	58PH*045–08
CNPV*3017A**	0.95	1.02	0.91	1.00	58PH*045–08
CNPV*3117A**	0.97	1.04	0.93	1.00	58PH*045–08
CNPV*3617A**	0.95	1.02	0.91	1.00	58PH*045–08
CNPV*3717A**	0.98	1.04	0.95	1.01	58PH*045–08
CSPH*2412A**	0.95	1.04	0.91	1.00	58PH*045–08
CSPH*3012A**	0.95	1.02	0.92	1.01	58PH*045–08
CSPH*3612A**	0.97	1.02	0.93	1.01	58PH*045–08
CAP**2417A**	0.95	1.02	0.94	1.03	58UVB060–14
CAP**3017A**	0.95	1.00	0.95	1.03	58UVB060–14
CAP**3617A**	0.95	1.01	0.95	1.02	58UVB060–14
CAP**3619A**	0.95	1.01	0.95	1.02	58UVB060–14
CAP**3621A**	0.95	1.01	0.95	1.01	58UVB060–14
CNPV*2417A**	0.94	1.03	0.94	1.05	58UVB060–14
CNPV*3017A**	0.95	1.01	0.95	1.03	58UVB060–14
CNPV*3117A**	0.97	1.00	0.97	1.03	58UVB060–14
CNPV*3617A**	0.95	1.01	0.95	1.03	58UVB060–14
CNPV*3621A**	0.95	1.01	0.95	1.03	58UVB060–14
CNPV*3717A**	0.98	1.00	0.97	1.02	58UVB060–14
CAP**3619A**	0.97	1.04	0.97	1.08	58UVB080–14
CAP**3621A**	0.97	1.02	0.97	1.07	58UVB080–14
CNPV*3621A**	0.96	1.03	0.96	1.08	58UVB080–14
CAP**3619A**	0.97	1.04	0.97	1.08	58UVB080–20
CAP**3621A**	0.97	1.02	0.97	1.07	58UVB080–20
CNPV*3621A**	0.97	1.04	0.97	1.09	58UVB080–20
CAP**3619A**	0.96	1.03	0.96	1.07	58UVB100–20
CAP**3621A**	0.96	1.02	0.96	1.06	58UVB100–20
CNPV*3621A**	0.96	1.03	0.96	1.08	58UVB100–20
CAP**2417A**	0.94	1.01	0.87	0.95	58VLR105–12
CAP**3017A**	0.95	1.00	0.87	0.94	58VLR105–12
CAP**3617A**	0.95	1.01	0.87	0.94	58VLR105–12
CAP**3619A**	0.95	1.01	0.87	0.94	58VLR105–12
CAP**3621A**	0.95	1.01	0.87	0.93	58VLR105–12
CNPH*2417A**	0.94	1.01	0.87	0.95	58VLR105–12
CNPH*3017A**	0.95	1.00	0.87	0.94	58VLR105–12
CNPH*3117A**	0.97	1.00	0.89	0.94	58VLR105–12
CNPH*3617A**	0.95	1.00	0.87	0.94	58VLR105–12
CNPV*2417A**	0.94	1.01	0.87	0.95	58VLR105–12
CNPV*3017A**	0.95	1.00	0.87	0.94	58VLR105–12
CNPV*3117A**	0.97	1.00	0.89	0.94	58VLR105–12
CNPV*3617A**	0.95	1.00	0.87	0.94	58VLR105–12
CNPV*3621A**	0.95	1.00	0.87	0.94	58VLR105–12
CNPV*3717A**	0.98	1.01	0.90	0.94	58VLR105–12
CSPH*2412A**	0.95	1.02	0.88	0.96	58VLR105–12
CSPH*3012A**	0.95	1.01	0.88	0.95	58VLR105–12
CSPH*3612A**	0.97	1.02	0.89	0.95	58VLR105–12
CAP**2417A**	0.95	1.04	0.88	0.95	58VMR105–12
CAP**3017A**	0.96	1.03	0.87	0.94	58VMR105–12
CAP**3617A**	0.97	1.02	0.88	0.94	58VMR105–12
CAP**3619A**	0.97	1.02	0.88	0.94	58VMR105–12
CAP**3621A**	0.97	1.02	0.88	0.94	58VMR105–12
CNPH*2417A**	0.95	1.05	0.88	0.96	58VMR105–12
CNPH*3017A**	0.96	1.03	0.88	0.95	58VMR105–12
CNPH*3117A**	0.98	1.04	0.90	0.95	58VMR105–12

Cooling Indoor Model	High Speed Cap.	Power	Low Speed Cap.	Power	Furnace Model
CNPH*3617A**	0.96	1.03	0.88	0.95	58VMR105–12
CNPV*2417A**	0.95	1.05	0.88	0.96	58VMR105–12
CNPV*3017A**	0.96	1.03	0.88	0.95	58VMR105–12
CNPV*3117A**	0.98	1.04	0.89	0.94	58VMR105–12
CNPV*3617A**	0.96	1.03	0.88	0.95	58VMR105–12
CNPV*3621A**	0.96	1.03	0.88	0.95	58VMR105–12
CNPV*3717A**	0.99	1.03	0.90	0.94	58VMR105–12
CSPH*2412A**	0.96	1.05	0.89	0.97	58VMR105–12
CSPH*3012A**	0.97	1.04	0.89	0.95	58VMR105–12
CSPH*3612A**	0.98	1.04	0.89	0.95	58VMR105–12
CAP**2417A**	0.95	1.02	0.94	1.08	59*N*A060V17**14
CAP**3017A**	0.96	1.02	0.94	1.07	59*N*A060V17**14
CAP**3617A**	0.97	1.02	0.95	1.07	59*N*A060V17**14
CAP**3619A**	0.97	1.02	0.95	1.07	59*N*A060V17**14
CAP**3621A**	0.97	1.02	0.95	1.06	59*N*A060V17**14
CNPH*2417A**	0.95	1.04	0.94	1.10	59*N*A060V17**14
CNPH*3017A**	0.96	1.02	0.95	1.08	59*N*A060V17**14
CNPH*3117A**	0.98	1.03	0.97	1.07	59*N*A060V17**14
CNPH*3617A**	0.96	1.02	0.95	1.08	59*N*A060V17**14
CNPV*2417A**	0.95	1.04	0.94	1.10	59*N*A060V17**14
CNPV*3017A**	0.96	1.02	0.95	1.08	59*N*A060V17**14
CNPV*3117A**	0.98	1.03	0.97	1.07	59*N*A060V17**14
CNPV*3617A**	0.96	1.02	0.95	1.08	59*N*A060V17**14
CNPV*3621A**	0.96	1.02	0.95	1.08	59*N*A060V17**14
CNPV*3717A**	0.99	1.02	0.97	1.07	59*N*A060V17**14
CSPH*2412A**	0.97	1.05	0.95	1.11	59*N*A060V17**14
CSPH*3012A**	0.97	1.03	0.96	1.09	59*N*A060V17**14
CSPH*3612A**	0.98	1.03	0.97	1.08	59*N*A060V17**14
CAP**2417A**	0.95	1.04	0.94	1.06	59*N*A080V17**14
CAP**3017A**	0.95	1.02	0.95	1.06	59*N*A080V17**14
CAP**3617A**	0.95	1.02	0.95	1.05	59*N*A080V17**14
CAP**3619A**	0.96	1.02	0.95	1.05	59*N*A080V17**14
CAP**3621A**	0.97	1.02	0.95	1.04	59*N*A080V17**14
CNPH*2417A**	0.95	1.05	0.95	1.09	59*N*A080V17**14
CNPH*3017A**	0.96	1.03	0.95	1.06	59*N*A080V17**14
CNPH*3117A**	0.98	1.02	0.97	1.05	59*N*A080V17**14
CNPH*3617A**	0.96	1.03	0.95	1.06	59*N*A080V17**14
CNPV*2417A**	0.95	1.04	0.95	1.09	59*N*A080V17**14
CNPV*3017A**	0.95	1.02	0.95	1.06	59*N*A080V17**14
CNPV*3117A**	0.97	1.02	0.97	1.05	59*N*A080V17**14
CNPV*3617A**	0.95	1.02	0.95	1.06	59*N*A080V17**14
CNPV*3621A**	0.96	1.02	0.95	1.06	59*N*A080V17**14
CNPV*3717A**	0.98	1.02	0.98	1.06	59*N*A080V17**14
CSPH*2412A**	0.96	1.05	0.96	1.10	59*N*A080V17**14
CSPH*3012A**	0.97	1.04	0.96	1.07	59*N*A080V17**14
CSPH*3612A**	0.98	1.04	0.97	1.06	59*N*A080V17**14
CAP**3619A**	0.97	1.02	0.95	1.05	59*N*A100V21**20
CAP**3621A**	0.97	1.02	0.95	1.04	59*N*A100V21**20
CNPH*3017A**	0.96	1.02	0.95	1.06	59*N*A100V21**20
CNPH*3117A**	0.98	1.02	0.97	1.05	59*N*A100V21**20
CNPH*3617A**	0.96	1.02	0.95	1.06	59*N*A100V21**20
CNPV*3621A**	0.96	1.02	0.95	1.06	59*N*A100V21**20
CSPH*3012A**	0.97	1.02	0.96	1.07	59*N*A100V21**20
CSPH*3612A**	0.98	1.02	0.97	1.06	59*N*A100V21**20
CNPH*3117A**	0.98	1.02	0.97	1.04	59*N*A120V24**22
CNPH*3617A**	0.96	1.02	0.95	1.05	59*N*A120V24**22
CSPH*3612A**	0.98	1.02	0.97	1.05	59*N*A120V24**22
CAP**2417A**	0.95	1.10	0.89	1.01	59*P5A040E14**10
CAP**3014A**	0.94	1.08	0.89	1.02	59*P5A040E14**10
CAP**3017A**	0.96	1.10	0.89	1.01	59*P5A040E14**10
CAP**3614A**	0.95	1.09	0.89	1.01	59*P5A040E14**10

DETAILED COOLING CAPACITIES# (CONTINUED)

24ANB124A30 Outdoor Section With FE5ANB004 Indoor Section**

Cooling Indoor Model	High Speed Cap.	Power	Low Speed Cap.	Power	Furnace Model
CAP**3617A**	0.96	1.09	0.90	1.01	59*P5A040E14**10
CNPH*2417A**	0.95	1.10	0.89	1.02	59*P5A040E14**10
CNPH*3017A**	0.96	1.10	0.89	1.01	59*P5A040E14**10
CNPH*3117A**	0.98	1.10	0.91	1.02	59*P5A040E14**10
CNPH*3617A**	0.96	1.10	0.89	1.01	59*P5A040E14**10
CNPV*2414A**	0.93	1.10	0.89	1.02	59*P5A040E14**10
CNPV*2417A**	0.95	1.10	0.89	1.02	59*P5A040E14**10
CNPV*3014A**	0.94	1.08	0.89	1.01	59*P5A040E14**10
CNPV*3017A**	0.96	1.10	0.89	1.01	59*P5A040E14**10
CNPV*3117A**	0.98	1.10	0.91	1.01	59*P5A040E14**10
CNPV*3617A**	0.96	1.10	0.89	1.01	59*P5A040E14**10
CNPV*3717A**	0.99	1.10	0.92	1.02	59*P5A040E14**10
CSPH*2412A**	0.95	1.09	0.89	1.02	59*P5A040E14**10
CSPH*3012A**	0.96	1.09	0.90	1.01	59*P5A040E14**10
CSPH*3612A**	0.98	1.10	0.91	1.01	59*P5A040E14**10
CAP**2417A**	0.95	1.05	0.94	1.04	59*P5A060E17**14
CAP**3017A**	0.96	1.05	0.94	1.04	59*P5A060E17**14
CAP**3617A**	0.97	1.05	0.95	1.04	59*P5A060E17**14
CAP**3619A**	0.97	1.05	0.95	1.04	59*P5A060E17**14
CAP**3621A**	0.97	1.04	0.95	1.04	59*P5A060E17**14
CNPH*2417A**	0.95	1.04	0.93	1.04	59*P5A060E17**14
CNPH*3017A**	0.96	1.05	0.94	1.04	59*P5A060E17**14
CNPH*3117A**	0.98	1.05	0.97	1.04	59*P5A060E17**14
CNPH*3617A**	0.96	1.05	0.94	1.04	59*P5A060E17**14
CNPV*2417A**	0.95	1.04	0.93	1.04	59*P5A060E17**14
CNPV*3017A**	0.96	1.05	0.94	1.04	59*P5A060E17**14
CNPV*3117A**	0.98	1.05	0.97	1.05	59*P5A060E17**14
CNPV*3617A**	0.96	1.05	0.94	1.04	59*P5A060E17**14
CNPV*3621A**	0.96	1.05	0.94	1.04	59*P5A060E17**14
CNPV*3717A**	1.00	1.05	0.97	1.04	59*P5A060E17**14
CSPH*2412A**	0.95	1.05	0.94	1.05	59*P5A060E17**14
CSPH*3012A**	0.97	1.05	0.95	1.04	59*P5A060E17**14
CSPH*3612A**	0.98	1.05	0.96	1.04	59*P5A060E17**14
CAP**2417A**	0.96	1.07	0.89	0.97	OVLAAB036098
CAP**3017A**	0.97	1.06	0.89	0.96	OVLAAB036098
CAP**3617A**	0.97	1.06	0.90	0.97	OVLAAB036098
CAP**3619A**	0.97	1.06	0.90	0.97	OVLAAB036098
CAP**3621A**	0.97	1.04	0.90	0.96	OVLAAB036098
CNPH*2417A**	0.95	1.09	0.90	0.99	OVLAAB036098
CNPH*3017A**	0.97	1.06	0.90	0.97	OVLAAB036098
CNPH*3117A**	0.99	1.06	0.91	0.97	OVLAAB036098
CNPH*3617A**	0.97	1.06	0.90	0.97	OVLAAB036098
CNPV*2417A**	0.95	1.09	0.90	0.99	OVLAAB036098
CNPV*3017A**	0.97	1.06	0.90	0.97	OVLAAB036098
CNPV*3117A**	0.99	1.06	0.91	0.97	OVLAAB036098
CNPV*3617A**	0.97	1.06	0.90	0.97	OVLAAB036098
CNPV*3621A**	0.97	1.06	0.90	0.97	OVLAAB036098
CNPV*3717A**	1.00	1.06	0.92	0.97	OVLAAB036098
CSPH*2412A**	0.97	1.10	0.91	0.99	OVLAAB036098
CSPH*3012A**	0.98	1.07	0.91	0.98	OVLAAB036098
CSPH*3612A**	0.98	1.06	0.91	0.97	OVLAAB036098
CAP**2417A**	0.94	1.03	0.90	0.97	OVMAAB036098
CAP**3017A**	0.95	1.02	0.90	0.97	OVMAAB036098
CAP**3617A**	0.95	1.02	0.91	0.97	OVMAAB036098
CAP**3619A**	0.95	1.02	0.91	0.97	OVMAAB036098
CAP**3621A**	0.95	1.02	0.91	0.97	OVMAAB036098
CNPH*2417A**	0.94	1.03	0.90	0.98	OVMAAB036098
CNPH*3017A**	0.95	1.04	0.90	0.97	OVMAAB036098
CNPH*3117A**	0.97	1.02	0.91	0.97	OVMAAB036098
CNPH*3617A**	0.95	1.04	0.90	0.97	OVMAAB036098
CNPV*2417A**	0.94	1.03	0.90	0.98	OVMAAB036098

Cooling Indoor Model	High Speed Cap.	Power	Low Speed Cap.	Power	Furnace Model
CNPV*3017A**	0.95	1.04	0.90	0.97	OVMAAB036098
CNPV*3117A**	0.97	1.02	0.91	0.97	OVMAAB036098
CNPV*3617A**	0.95	1.04	0.90	0.97	OVMAAB036098
CNPV*3621A**	0.95	1.02	0.90	0.97	OVMAAB036098
CNPV*3717A**	0.98	1.03	0.92	0.97	OVMAAB036098
CSPH*2412A**	0.95	1.04	0.91	0.99	OVMAAB036098
CSPH*3012A**	0.95	1.05	0.91	0.98	OVMAAB036098
CSPH*3612A**	0.96	1.02	0.91	0.98	OVMAAB036098
CAP**2417A**	0.96	1.03	0.96	1.03	OVMAAB042112
CAP**3017A**	0.97	1.02	0.96	1.02	OVMAAB042112
CAP**3617A**	0.98	1.03	0.97	1.02	OVMAAB042112
CAP**3619A**	0.98	1.03	0.97	1.02	OVMAAB042112
CAP**3621A**	0.98	1.03	0.97	1.01	OVMAAB042112
CNPH*2417A**	0.96	1.07	0.96	1.05	OVMAAB042112
CNPH*3017A**	0.98	1.05	0.96	1.02	OVMAAB042112
CNPH*3117A**	0.99	1.03	0.98	1.02	OVMAAB042112
CNPH*3617A**	0.98	1.05	0.96	1.02	OVMAAB042112
CNPV*2417A**	0.96	1.07	0.96	1.05	OVMAAB042112
CNPV*3017A**	0.98	1.05	0.96	1.02	OVMAAB042112
CNPV*3117A**	0.99	1.03	0.98	1.03	OVMAAB042112
CNPV*3617A**	0.98	1.03	0.96	1.02	OVMAAB042112
CNPV*3621A**	0.98	1.03	0.96	1.02	OVMAAB042112
CNPV*3717A**	1.01	1.03	0.99	1.02	OVMAAB042112
CSPH*2412A**	0.97	1.06	0.97	1.06	OVMAAB042112
CSPH*3012A**	0.98	1.05	0.97	1.04	OVMAAB042112
CSPH*3612A**	0.99	1.03	0.98	1.03	OVMAAB042112

See notes on page 48

DETAILED COOLING CAPACITIES# (CONTINUED)

EVAPORATOR AIR		CONDENSER ENTERING AIR TEMPERATURES °F (°C)																	
		75 (23.9)			85 (29.4)			95 (35)			105 (40.6)			115 (46.1)			125 (51.7)		
CFM	EWB °F (°C)	Capacity MBtuh		Total Sys. KW**	Capacity MBtuh		Total Sys. KW**	Capacity MBtuh		Total Sys. KW**	Capacity MBtuh		Total Sys. KW**	Capacity MBtuh		Total Sys. KW**	Capacity MBtuh		Total Sys. KW**
		Total	Sens‡		Total	Sens‡		Total	Sens‡		Total	Sens‡		Total	Sens‡		Total	Sens‡	
24ANB136A30 Outdoor Section With FE5ANB004 Indoor Section High**																			
900	57 (13.9)	32.38	32.38	1.97	31.63	31.63	2.20	30.77	30.77	2.45	29.79	29.79	2.73	28.66	28.66	3.03	27.36	27.36	3.38
	62 (16.7)	34.40	29.89	1.99	33.26	29.50	2.22	32.01	29.07	2.46	30.60	28.58	2.74	29.05	28.02	3.04	27.40	27.40	3.38
	63 (17.2)††	35.15	24.76	1.99	34.01	24.31	2.22	32.71	23.81	2.47	31.26	23.26	2.74	29.65	22.64	3.04	27.85	21.97	3.38
	67 (19.4)	38.03	25.71	2.02	36.78	25.27	2.25	35.39	24.78	2.50	33.84	24.24	2.77	32.10	23.64	3.07	30.14	22.96	3.41
	72 (22.2)	42.01	21.46	2.06	40.65	20.95	2.28	39.11	20.40	2.53	37.40	19.80	2.81	35.50	19.14	3.11	33.34	18.40	3.45
975	57 (13.9)	33.40	33.40	1.99	32.61	32.61	2.22	31.70	31.70	2.47	30.65	30.65	2.75	29.46	29.46	3.05	28.09	28.09	3.40
	62 (16.7)	35.03	31.28	2.00	33.86	30.90	2.23	32.55	30.46	2.48	31.10	29.96	2.75	29.54	29.47	3.05	28.14	28.14	3.40
	63 (17.2)††	35.79	25.74	2.01	34.58	25.29	2.24	33.24	24.79	2.49	31.73	24.23	2.76	30.06	23.61	3.06	28.21	22.93	3.40
	67 (19.4)	38.70	26.75	2.04	37.39	26.31	2.26	35.93	25.82	2.51	34.33	25.28	2.78	32.52	24.67	3.09	30.50	24.00	3.43
	72 (22.2)	42.73	22.13	2.07	41.30	21.62	2.30	39.71	21.07	2.55	37.79	20.41	2.82	35.95	19.80	3.13	33.73	19.06	3.47
1050	57 (13.9)	34.34	34.34	2.01	33.50	33.50	2.24	32.54	32.54	2.49	31.44	31.44	2.76	30.19	30.19	3.07	28.75	28.75	3.41
	62 (16.7)	35.59	32.64	2.02	34.38	32.25	2.25	33.04	31.81	2.49	31.58	31.37	2.77	30.24	30.24	3.07	28.79	28.79	3.41
	63 (17.2)††	36.34	26.69	2.03	35.07	26.23	2.25	33.69	25.73	2.50	32.13	25.17	2.77	30.42	24.56	3.07	28.51	23.88	3.41
	67 (19.4)	39.27	27.77	2.05	37.91	27.32	2.28	36.40	26.83	2.53	34.74	26.29	2.80	32.89	25.69	3.10	30.81	25.01	3.44
	72 (22.2)	43.34	22.78	2.09	41.86	22.28	2.32	40.21	21.72	2.56	38.12	21.02	2.83	36.34	20.44	3.14	34.04	19.70	3.48
1200	57 (13.9)	35.99	35.99	2.04	35.07	35.07	2.27	34.01	34.01	2.52	32.82	32.82	2.80	31.45	31.45	3.11	29.88	29.88	3.45
	62 (16.7)	36.55	35.23	2.05	35.29	34.80	2.28	34.06	34.06	2.52	32.87	32.87	2.80	31.50	31.50	3.11	29.93	29.93	3.45
	63 (17.2)††	37.24	28.52	2.05	35.90	28.07	2.28	34.43	27.57	2.53	32.79	27.02	2.80	30.99	26.40	3.10	29.00	25.71	3.44
	67 (19.4)	40.20	29.72	2.08	38.76	29.29	2.31	37.00	28.73	2.55	35.42	28.27	2.83	33.47	27.66	3.13	31.30	26.98	3.47
	72 (22.2)	44.34	24.04	2.12	42.76	23.53	2.35	41.01	22.97	2.59	39.08	22.36	2.87	36.94	21.69	3.17	34.55	20.95	3.51

EVAPORATOR AIR		CONDENSER ENTERING AIR TEMPERATURES °F (°C)																	
		75 (23.9)			85 (29.4)			95 (35)			105 (40.6)			115 (46.1)			125 (51.7)		
CFM	EWB °F (°C)	Capacity MBtuh		Total Sys. KW**	Capacity MBtuh		Total Sys. KW**	Capacity MBtuh		Total Sys. KW**	Capacity MBtuh		Total Sys. KW**	Capacity MBtuh		Total Sys. KW**	Capacity MBtuh		Total Sys. KW**
		Total	Sens‡		Total	Sens‡		Total	Sens‡		Total	Sens‡		Total	Sens‡		Total	Sens‡	
24ANB136A30 Outdoor Section With FE5ANB004 Indoor Section Low**																			
720	57 (13.9)	25.36	25.36	1.27	22.91	22.91	1.42	20.54	20.54	1.59	18.24	18.24	1.78	16.03	16.03	1.99	13.91	13.91	2.23
	62 (16.7)	26.35	24.12	1.26	23.51	22.13	1.42	20.80	20.21	1.59	18.28	18.28	1.78	16.06	16.06	1.99	13.93	13.93	2.23
	63 (17.2)††	26.96	19.75	1.26	24.05	18.01	1.42	21.26	16.33	1.59	18.59	14.72	1.77	16.06	13.17	1.99	13.67	11.70	2.23
	67 (19.4)	29.37	20.64	1.25	26.20	18.84	1.41	23.16	17.11	1.57	20.27	15.44	1.75	17.52	13.85	1.96	14.91	12.32	2.20
	72 (22.2)	32.68	17.05	1.24	29.16	15.45	1.39	25.79	13.91	1.55	22.58	12.45	1.73	19.53	11.05	1.93	16.63	9.72	2.17
780	57 (13.9)	26.18	26.18	1.27	23.63	23.63	1.43	21.16	21.16	1.59	18.78	18.78	1.78	16.49	16.49	1.98	14.28	14.28	2.22
	62 (16.7)	26.85	25.32	1.27	23.94	23.25	1.42	21.20	21.20	1.59	18.81	18.81	1.77	16.52	16.52	1.98	14.31	14.31	2.22
	63 (17.2)††	27.45	20.59	1.27	24.45	18.79	1.42	21.59	17.05	1.59	18.86	15.38	1.78	16.28	13.79	1.99	13.84	12.26	2.23
	67 (19.4)	29.87	21.53	1.26	26.62	19.67	1.41	23.51	17.87	1.57	20.55	16.15	1.75	17.74	14.50	1.96	15.09	12.92	2.20
	72 (22.2)	33.22	17.64	1.25	29.61	15.99	1.40	26.16	14.41	1.55	22.88	12.91	1.73	19.76	11.47	1.93	16.81	10.11	2.17
840	57 (13.9)	26.93	26.93	1.27	24.29	24.29	1.43	21.73	21.73	1.59	19.27	19.27	1.77	16.89	16.89	1.98	14.62	14.62	2.22
	62 (16.7)	27.30	26.48	1.27	24.36	24.30	1.43	21.77	21.77	1.59	19.30	19.30	1.77	16.92	16.92	1.98	14.64	14.64	2.22
	63 (17.2)††	27.87	21.41	1.27	24.80	19.55	1.42	21.88	17.76	1.59	19.10	16.04	1.78	16.47	14.39	1.99	13.99	12.81	2.23
	67 (19.4)	30.31	22.40	1.26	26.98	20.48	1.41	23.81	18.63	1.57	20.79	16.85	1.76	17.93	15.14	1.96	15.23	13.51	2.20
	72 (22.2)	33.69	18.21	1.25	30.00	16.52	1.40	26.48	14.90	1.56	23.13	13.36	1.73	19.96	11.88	1.94	16.96	10.48	2.17
960	57 (13.9)	28.26	28.26	1.28	25.45	25.45	1.43	22.73	22.73	1.59	20.11	20.11	1.77	17.60	17.60	1.98	15.20	15.20	2.21
	62 (16.7)	28.31	28.31	1.28	25.49	25.49	1.43	22.77	22.77	1.59	20.15	20.15	1.77	17.63	17.63	1.98	15.22	15.22	2.21
	63 (17.2)††	28.56	23.00	1.28	25.38	21.03	1.43	22.36	19.13	1.60	19.49	17.31	1.78	16.78	15.55	1.99	14.25	13.86	2.24
	67 (19.4)	31.01	24.10	1.27	27.57	22.07	1.42	24.29	20.10	1.58	21.18	18.22	1.76	18.24	16.40	1.97	15.48	14.65	2.21
	72 (22.2)	34.45	19.30	1.26	30.63	17.53	1.41	26.99	15.84	1.56	23.54	14.22	1.74	20.27	12.68	1.94	17.20	11.21	2.17

See notes on page 48

DETAILED COOLING CAPACITIES# (CONTINUED)

24ANB136A30 Outdoor Section With FE5ANB004 Indoor Section**

Cooling Indoor Model	High Speed Cap.	Power	Low Speed Cap.	Power	Furnace Model
*FE5ANB004	1.00	1.00	1.00	1.00	
CAP**3614A**	0.95	1.10	0.94	1.23	
CAP**3617A**	0.95	1.11	0.94	1.23	
CAP**3619A**	0.95	1.11	0.94	1.23	
CAP**3621A**	0.95	1.11	0.94	1.23	
CAP**4221A**	0.96	1.11	0.95	1.22	
CAP**4224A**	0.96	1.11	0.95	1.22	
CAP**4817A**	0.99	1.12	0.97	1.22	
CAP**4821A**	0.97	1.10	0.95	1.20	
CAP**4823A**	0.97	1.10	0.95	1.20	
CAP**4824A**	0.98	1.12	0.96	1.22	
CNPH*3617A**	0.95	1.11	0.94	1.23	
CNPH*4221A**	0.96	1.11	0.95	1.22	
CNPH*4321A**	0.99	1.13	0.97	1.22	
CNPH*4821A**	0.97	1.10	0.95	1.20	
CNPV*3617A**	0.95	1.11	0.94	1.23	
CNPV*3621A**	0.95	1.11	0.94	1.23	
CNPV*3717A**	0.99	1.12	0.97	1.22	
CNPV*4217A**	0.96	1.11	0.94	1.20	
CNPV*4221A**	0.96	1.11	0.95	1.22	
CNPV*4324A**	0.99	1.13	0.97	1.22	
CNPV*4821A**	0.97	1.10	0.95	1.20	
CNPV*4824A**	0.97	1.10	0.95	1.20	
CSPH*3612A**	0.97	1.10	0.95	1.20	
CSPH*4212A**	0.98	1.11	0.97	1.23	
CSPH*4812A**	0.99	1.12	0.97	1.22	
FE4AN(B,F)003	0.97	1.02	0.95	1.01	
FE4AN(B,F)005	1.01	1.02	0.97	1.00	
FE4ANB006	1.00	1.00	0.99	1.01	
FE4ANF002	0.96	1.06	0.95	1.04	
FV4CN(B,F)003	0.95	1.01	0.95	1.01	
FV4CN(B,F)005	0.99	1.01	0.97	1.01	
FV4CNB006	1.01	1.01	0.97	0.99	
FV4CNF002	0.95	1.04	0.94	1.04	
CAP**3614A**	0.96	1.07	0.94	1.05	58CV(A,X)070–12
CAP**3617A**	0.96	1.08	0.95	1.05	58CV(A,X)070–12
CAP**4817A**	0.99	1.09	0.97	1.04	58CV(A,X)070–12
CNPH*3617A**	0.96	1.07	0.94	1.05	58CV(A,X)070–12
CNPH*4221A**	0.97	1.05	0.95	1.05	58CV(A,X)070–12
CNPH*4321A**	1.00	1.08	0.98	1.04	58CV(A,X)070–12
CNPH*4821A**	0.98	1.06	0.97	1.03	58CV(A,X)070–12
CNPV*3617A**	0.96	1.07	0.94	1.05	58CV(A,X)070–12
CNPV*3717A**	1.00	1.07	0.97	1.03	58CV(A,X)070–12
CNPV*4217A**	0.98	1.07	0.96	1.04	58CV(A,X)070–12
CSPH*3612A**	0.98	1.06	0.96	1.04	58CV(A,X)070–12
CSPH*4212A**	0.99	1.06	0.97	1.04	58CV(A,X)070–12
CSPH*4812A**	0.99	1.07	0.97	1.04	58CV(A,X)070–12
CAP**3617A**	0.96	1.04	0.95	1.03	58CV(A,X)090–16
CAP**3619A**	0.96	1.06	0.95	1.03	58CV(A,X)090–16
CAP**3621A**	0.97	1.05	0.95	1.02	58CV(A,X)090–16
CAP**4221A**	0.97	1.05	0.95	1.02	58CV(A,X)090–16
CAP**4817A**	0.99	1.05	0.97	1.02	58CV(A,X)090–16
CAP**4821A**	0.99	1.05	0.97	1.02	58CV(A,X)090–16
CNPH*3617A**	0.96	1.05	0.94	1.03	58CV(A,X)090–16
CNPH*4221A**	0.97	1.04	0.95	1.03	58CV(A,X)090–16
CNPH*4321A**	1.01	1.05	0.98	1.02	58CV(A,X)090–16
CNPH*4821A**	0.99	1.04	0.97	1.01	58CV(A,X)090–16
CNPV*3617A**	0.96	1.05	0.94	1.03	58CV(A,X)090–16
CNPV*3621A**	0.96	1.06	0.94	1.03	58CV(A,X)090–16
CNPV*3717A**	1.00	1.05	0.98	1.02	58CV(A,X)090–16
CNPV*4217A**	0.98	1.05	0.96	1.02	58CV(A,X)090–16

Cooling Indoor Model	High Speed Cap.	Power	Low Speed Cap.	Power	Furnace Model
CNPV*4221A**	0.97	1.04	0.95	1.03	58CV(A,X)090–16
CNPV*4821A**	0.99	1.04	0.97	1.01	58CV(A,X)090–16
CSPH*3612A**	0.99	1.05	0.97	1.03	58CV(A,X)090–16
CSPH*4212A**	0.99	1.05	0.97	1.02	58CV(A,X)090–16
CSPH*4812A**	1.00	1.05	0.97	1.02	58CV(A,X)090–16
CAP**3619A**	0.96	1.06	0.95	1.03	58CV(A,X)110–20
CAP**3621A**	0.97	1.05	0.95	1.02	58CV(A,X)110–20
CAP**4221A**	0.97	1.04	0.95	1.02	58CV(A,X)110–20
CAP**4224A**	0.97	1.04	0.95	1.02	58CV(A,X)110–20
CAP**4821A**	0.99	1.05	0.97	1.02	58CV(A,X)110–20
CAP**4823A**	0.99	1.05	0.97	1.02	58CV(A,X)110–20
CAP**4824A**	0.99	1.05	0.97	1.02	58CV(A,X)110–20
CNPH*3617A**	0.96	1.06	0.94	1.04	58CV(A,X)110–20
CNPH*4221A**	0.97	1.04	0.95	1.03	58CV(A,X)110–20
CNPH*4321A**	1.01	1.05	0.98	1.02	58CV(A,X)110–20
CNPH*4821A**	0.99	1.04	0.97	1.01	58CV(A,X)110–20
CNPV*3621A**	0.96	1.05	0.94	1.03	58CV(A,X)110–20
CNPV*4221A**	0.97	1.03	0.95	1.03	58CV(A,X)110–20
CNPV*4324A**	1.01	1.05	0.98	1.01	58CV(A,X)110–20
CNPV*4821A**	0.99	1.04	0.97	1.01	58CV(A,X)110–20
CNPV*4824A**	0.99	1.05	0.97	1.01	58CV(A,X)110–20
CSPH*3612A**	0.99	1.05	0.97	1.03	58CV(A,X)110–20
CSPH*4212A**	0.99	1.05	0.97	1.03	58CV(A,X)110–20
CSPH*4812A**	1.00	1.05	0.97	1.02	58CV(A,X)110–20
CAP**4224A**	0.97	1.03	0.95	1.01	58CV(A,X)135–22
CAP**4823A**	0.99	1.05	0.97	1.01	58CV(A,X)135–22
CAP**4824A**	0.99	1.03	0.97	1.01	58CV(A,X)135–22
CNPH*3617A**	0.96	1.06	0.95	1.03	58CV(A,X)135–22
CNPH*4221A**	0.97	1.02	0.95	1.02	58CV(A,X)135–22
CNPH*4321A**	1.01	1.03	0.98	1.01	58CV(A,X)135–22
CNPH*4821A**	0.99	1.04	0.97	1.00	58CV(A,X)135–22
CNPV*4324A**	1.01	1.03	0.98	1.00	58CV(A,X)135–22
CNPV*4824A**	0.99	1.04	0.97	1.00	58CV(A,X)135–22
CSPH*3612A**	0.99	1.05	0.97	1.02	58CV(A,X)135–22
CSPH*4212A**	0.99	1.04	0.97	1.02	58CV(A,X)135–22
CSPH*4812A**	1.00	1.04	0.97	1.01	58CV(A,X)135–22
CAP**4224A**	0.97	1.02	0.95	1.00	58CV(A,X)155–22
CAP**4823A**	0.99	1.03	0.97	1.01	58CV(A,X)155–22
CAP**4824A**	0.99	1.02	0.97	1.00	58CV(A,X)155–22
CNPH*3617A**	0.96	1.04	0.95	1.02	58CV(A,X)155–22
CNPH*4221A**	0.98	1.02	0.95	1.01	58CV(A,X)155–22
CNPH*4321A**	1.01	1.03	0.98	1.00	58CV(A,X)155–22
CNPH*4821A**	0.99	1.03	0.97	1.00	58CV(A,X)155–22
CNPV*4324A**	1.01	1.03	0.98	0.99	58CV(A,X)155–22
CNPV*4824A**	0.99	1.03	0.97	1.00	58CV(A,X)155–22
CSPH*3612A**	0.99	1.04	0.97	1.01	58CV(A,X)155–22
CSPH*4212A**	0.99	1.04	0.97	1.01	58CV(A,X)155–22
CSPH*4812A**	1.00	1.04	0.97	1.00	58CV(A,X)155–22
CAP**3617A**	0.94	1.10	0.94	1.09	58HDV040––12
CAP**3619A**	0.94	1.08	0.94	1.09	58HDV040––12
CAP**3621A**	0.95	1.10	0.94	1.08	58HDV040––12
CAP**4221A**	0.95	1.09	0.94	1.08	58HDV040––12
CAP**4817A**	0.97	1.09	0.96	1.09	58HDV040––12
CAP**4821A**	0.97	1.09	0.95	1.08	58HDV040––12
CAP**4823A**	0.97	1.09	0.95	1.08	58HDV040––12
CNPH*4221A**	0.95	1.09	0.94	1.09	58HDV040––12
CNPH*4321A**	0.98	1.10	0.97	1.08	58HDV040––12
CNPH*4821A**	0.97	1.09	0.95	1.08	58HDV040––12
CNPV*3717A**	0.98	1.10	0.96	1.08	58HDV040––12
CNPV*4217A**	0.96	1.07	0.95	1.08	58HDV040––12
CNPV*4221A**	0.95	1.09	0.94	1.09	58HDV040––12

Cooling Indoor Model	High Speed Cap.	Power	Low Speed Cap.	Power	Furnace Model
CNPV*4821A**	0.97	1.09	0.95	1.08	58HDV040––12
CSPH*3612A**	0.96	1.08	0.95	1.08	58HDV040––12
CSPH*4212A**	0.97	1.09	0.95	1.08	58HDV040––12
CSPH*4812A**	0.97	1.09	0.96	1.08	58HDV040––12
CAP**3617A**	0.96	1.14	0.96	1.14	58HDV060––12
CAP**3619A**	0.96	1.07	0.93	1.05	58HDV060––12
CAP**3621A**	0.96	1.12	0.96	1.13	58HDV060––12
CAP**4221A**	0.97	1.14	0.97	1.13	58HDV060––12
CAP**4817A**	0.99	1.12	0.99	1.13	58HDV060––12
CAP**4821A**	0.98	1.13	0.98	1.13	58HDV060––12
CAP**4823A**	0.98	1.13	0.98	1.13	58HDV060––12
CNPH*3617A**	0.96	1.14	0.95	1.14	58HDV060––12
CNPH*4221A**	0.96	1.07	0.94	1.05	58HDV060––12
CNPH*4321A**	1.01	1.13	1.00	1.13	58HDV060––12
CNPH*4821A**	0.99	1.11	0.99	1.13	58HDV060––12
CNPV*3617A**	0.96	1.14	0.95	1.14	58HDV060––12
CNPV*3621A**	0.96	1.14	0.95	1.14	58HDV060––12
CNPV*3717A**	1.00	1.12	0.99	1.13	58HDV060––12
CNPV*4217A**	0.98	1.14	0.97	1.14	58HDV060––12
CNPV*4221A**	0.97	1.13	0.97	1.14	58HDV060––12
CNPV*4821A**	0.99	1.11	0.99	1.13	58HDV060––12
CSPH*3612A**	0.98	1.07	0.95	1.05	58HDV060––12
CSPH*4212A**	0.98	1.07	0.95	1.05	58HDV060––12
CSPH*4812A**	0.99	1.08	0.96	1.06	58HDV060––12
CAP**3621A**	0.97	1.07	0.96	1.06	58HDV080––20
CAP**4221A**	0.97	1.08	0.97	1.06	58HDV080––20
CAP**4224A**	0.97	1.08	0.97	1.06	58HDV080––20
CAP**4821A**	0.99	1.09	0.97	1.06	58HDV080––20
CAP**4823A**	0.99	1.06	0.97	1.06	58HDV080––20
CAP**4824A**	0.99	1.07	0.98	1.06	58HDV080––20
CNPH*3617A**	0.96	1.06	0.95	1.06	58HDV080––20
CNPH*4221A**	0.96	1.03	0.94	1.03	58HDV080––20
CNPH*4321A**	1.01	1.07	0.99	1.06	58HDV080––20
CNPH*4821A**	0.97	1.04	0.96	1.03	58HDV080––20
CNPV*3621A**	0.96	1.07	0.95	1.06	58HDV080––20
CNPV*4221A**	0.97	1.08	0.96	1.06	58HDV080––20
CNPV*4324A**	1.01	1.08	1.00	1.06	58HDV080––20
CNPV*4821A**	0.99	1.08	0.98	1.06	58HDV080––20
CNPV*4824A**	0.99	1.08	0.98	1.06	58HDV080––20
CSPH*3612A**	0.98	1.06	0.97	1.06	58HDV080––20
CSPH*4212A**	0.97	1.04	0.95	1.03	58HDV080––20
CSPH*4812A**	0.98	1.04	0.96	1.02	58HDV080––20
CAP**4224A**	0.98	1.08	0.97	1.06	58HDV100––20
CAP**4823A**	0.99	1.10	0.99	1.07	58HDV100––20
CAP**4824A**	0.99	1.08	0.99	1.06	58HDV100––20
CNPH*3617A**	0.96	1.06	0.95	1.07	58HDV100––20
CNPH*4221A**	0.97	1.08	0.97	1.07	58HDV100––20
CNPH*4321A**	1.00	1.07	1.00	1.06	58HDV100––20
CNPH*4821A**	0.99	1.08	0.99	1.06	58HDV100––20
CNPV*4324A**	1.01	1.04	0.99	1.04	58HDV100––20
CNPV*4824A**	0.99	1.04	0.97	1.04	58HDV100––20
CSPH*3612A**	0.99	1.09	0.98	1.07	58HDV100––20
CSPH*4212A**	1.00	1.08	0.99	1.07	58HDV100––20
CSPH*4812A**	1.00	1.08	0.99	1.07	58HDV100––20
CAP**3617A**	0.96	1.03	0.94	1.02	58MEB040–12
CAP**3619A**	0.97	1.09	0.96	1.06	58MEB040–12
CAP**3621A**	0.97	1.09	0.96	1.05	58MEB040–12
CAP**4221A**	0.98	1.08	0.97	1.05	58MEB040–12
CAP**4817A**	1.00	1.07	0.99	1.05	58MEB040–12
CAP**4821A**	0.99	1.10	0.98	1.05	58MEB040–12
CNPH*3617A**	0.95	1.03	0.93	1.02	58MEB040–12

DETAILED COOLING CAPACITIES# (CONTINUED)

24ANB136A**30 Outdoor Section With FE5ANB004 Indoor Section

Cooling Indoor Model	High Speed Cap.	Power	Low Speed Cap.	Power	Furnace Model
CNPH*4221A**	0.97	1.03	0.94	1.02	58MEB040–12
CNPH*4321A**	1.00	1.04	0.97	1.01	58MEB040–12
CNPH*4821A**	0.98	1.03	0.96	1.02	58MEB040–12
CNPV*3617A**	0.95	1.03	0.93	1.02	58MEB040–12
CNPV*3621A**	0.95	1.03	0.93	1.02	58MEB040–12
CNPV*3717A**	0.99	1.03	0.97	1.02	58MEB040–12
CNPV*4217A**	0.97	1.03	0.95	1.02	58MEB040–12
CNPV*4221A**	0.97	1.03	0.94	1.02	58MEB040–12
CNPV*4821A**	0.98	1.03	0.96	1.02	58MEB040–12
CSPH*3612A**	0.98	1.04	0.95	1.01	58MEB040–12
CSPH*4212A**	0.99	1.03	0.96	1.02	58MEB040–12
CSPH*4812A**	0.99	1.03	0.96	1.01	58MEB040–12
CAP**3617A**	0.97	1.09	0.96	1.07	58MEC060–12
CAP**3619A**	0.97	1.09	0.96	1.07	58MEC060–12
CAP**3621A**	0.97	1.09	0.97	1.06	58MEC060–12
CAP**4221A**	0.98	1.10	0.97	1.06	58MEC060–12
CAP**4817A**	1.00	1.11	0.99	1.07	58MEC060–12
CAP**4821A**	0.99	1.10	0.99	1.06	58MEC060–12
CNPH*3617A**	0.96	1.08	0.95	1.07	58MEC060–12
CNPH*4221A**	0.98	1.10	0.97	1.06	58MEC060–12
CNPH*4321A**	1.00	1.08	1.00	1.06	58MEC060–12
CNPH*4821A**	1.00	1.11	0.97	1.02	58MEC060–12
CNPV*3617A**	0.96	1.08	0.95	1.07	58MEC060–12
CNPV*3621A**	0.96	1.08	0.96	1.07	58MEC060–12
CNPV*3717A**	1.01	1.09	1.00	1.07	58MEC060–12
CNPV*4217A**	0.98	1.09	0.98	1.07	58MEC060–12
CNPV*4221A**	0.98	1.10	0.97	1.06	58MEC060–12
CNPV*4821A**	1.00	1.11	0.97	1.02	58MEC060–12
CSPH*3612A**	0.99	1.09	0.98	1.06	58MEC060–12
CSPH*4212A**	1.00	1.11	0.99	1.06	58MEC060–12
CSPH*4812A**	1.01	1.11	0.99	1.06	58MEC060–12
CAP**3617A**	0.96	1.03	0.93	1.02	58MEC080–12
CAP**3619A**	0.97	1.09	0.95	1.05	58MEC080–12
CAP**3621A**	0.97	1.07	0.96	1.05	58MEC080–12
CAP**4221A**	0.98	1.08	0.97	1.05	58MEC080–12
CAP**4817A**	1.00	1.07	0.99	1.05	58MEC080–12
CAP**4821A**	0.99	1.10	0.98	1.05	58MEC080–12
CNPH*3617A**	0.95	1.03	0.95	1.06	58MEC080–12
CNPH*4221A**	0.97	1.05	0.96	1.06	58MEC080–12
CNPH*4321A**	1.00	1.08	0.99	1.05	58MEC080–12
CNPH*4821A**	0.98	1.03	0.98	1.05	58MEC080–12
CNPV*3617A**	0.95	1.04	0.95	1.06	58MEC080–12
CNPV*3621A**	0.95	1.04	0.95	1.06	58MEC080–12
CNPV*3717A**	0.99	1.04	0.99	1.06	58MEC080–12
CNPV*4217A**	0.98	1.06	0.97	1.06	58MEC080–12
CNPV*4221A**	0.97	1.05	0.96	1.06	58MEC080–12
CNPV*4821A**	0.98	1.04	0.98	1.05	58MEC080–12
CSPH*3612A**	0.98	1.04	0.97	1.06	58MEC080–12
CSPH*4212A**	0.98	1.03	0.98	1.06	58MEC080–12
CSPH*4812A**	1.01	1.07	0.99	1.05	58MEC080–12
CAP**3617A**	0.96	1.06	0.96	1.08	58MEC080–16
CAP**3619A**	0.96	1.08	0.96	1.08	58MEC080–16
CAP**3621A**	0.97	1.07	0.97	1.08	58MEC080–16
CAP**4221A**	0.97	1.08	0.97	1.08	58MEC080–16
CAP**4817A**	0.99	1.06	0.99	1.08	58MEC080–16
CAP**4821A**	0.99	1.09	0.99	1.08	58MEC080–16
CNPH*3617A**	0.96	1.06	0.96	1.09	58MEC080–16
CNPH*4221A**	0.97	1.04	0.97	1.09	58MEC080–16
CNPH*4321A**	1.01	1.07	1.01	1.08	58MEC080–16
CNPH*4821A**	0.99	1.08	0.99	1.08	58MEC080–16
CNPV*3617A**	0.96	1.06	0.96	1.09	58MEC080–16

Cooling Indoor Model	High Speed Cap.	Power	Low Speed Cap.	Power	Furnace Model
CNPV*3621A**	0.96	1.03	0.96	1.09	58MEC080–16
CNPV*3717A**	1.01	1.09	1.00	1.08	58MEC080–16
CNPV*4217A**	0.98	1.09	0.98	1.08	58MEC080–16
CNPV*4221A**	0.97	1.06	0.97	1.08	58MEC080–16
CNPV*4821A**	0.99	1.08	0.99	1.08	58MEC080–16
CSPH*3612A**	0.99	1.06	0.99	1.08	58MEC080–16
CSPH*4212A**	0.99	1.06	0.99	1.08	58MEC080–16
CSPH*4812A**	1.00	1.08	0.99	1.08	58MEC080–16
CAP**3619A**	0.97	1.07	0.97	1.08	58MEC100–20
CAP**3621A**	0.97	1.05	0.97	1.07	58MEC100–20
CAP**4221A**	0.98	1.06	0.98	1.07	58MEC100–20
CAP**4224A**	0.98	1.06	0.99	1.07	58MEC100–20
CAP**4821A**	0.99	1.06	0.99	1.07	58MEC100–20
CAP**4823A**	0.99	1.06	0.99	1.07	58MEC100–20
CAP**4824A**	0.99	1.06	1.00	1.07	58MEC100–20
CNPH*3617A**	0.96	1.06	0.97	1.08	58MEC100–20
CNPH*4221A**	0.98	1.06	0.98	1.07	58MEC100–20
CNPH*4321A**	1.00	1.07	1.01	1.07	58MEC100–20
CNPH*4821A**	1.00	1.07	1.00	1.06	58MEC100–20
CNPV*3621A**	0.96	1.06	0.97	1.08	58MEC100–20
CNPV*4221A**	0.98	1.06	0.98	1.07	58MEC100–20
CNPV*4324A**	1.00	1.04	1.01	1.06	58MEC100–20
CNPV*4821A**	1.00	1.07	1.00	1.06	58MEC100–20
CNPV*4824A**	1.00	1.07	1.00	1.06	58MEC100–20
CSPH*3612A**	0.99	1.05	0.99	1.07	58MEC100–20
CSPH*4212A**	1.00	1.07	1.00	1.07	58MEC100–20
CSPH*4812A**	1.01	1.07	1.01	1.07	58MEC100–20
CAP**3617A**	0.96	1.06	0.95	1.04	58MV(B,C)060–14
CAP**3619A**	0.96	1.06	0.95	1.04	58MV(B,C)060–14
CAP**3621A**	0.96	1.06	0.95	1.03	58MV(B,C)060–14
CAP**4221A**	0.97	1.05	0.95	1.03	58MV(B,C)060–14
CAP**4817A**	0.99	1.06	0.97	1.03	58MV(B,C)060–14
CAP**4821A**	0.99	1.05	0.97	1.03	58MV(B,C)060–14
CNPH*3617A**	0.96	1.06	0.94	1.04	58MV(B,C)060–14
CNPH*4221A**	0.97	1.04	0.95	1.04	58MV(B,C)060–14
CNPH*4321A**	1.00	1.05	0.98	1.03	58MV(B,C)060–14
CNPH*4821A**	0.99	1.05	0.97	1.03	58MV(B,C)060–14
CNPV*3617A**	0.96	1.06	0.94	1.04	58MV(B,C)060–14
CNPV*3621A**	0.96	1.06	0.94	1.04	58MV(B,C)060–14
CNPV*3717A**	1.00	1.06	0.98	1.03	58MV(B,C)060–14
CNPV*4217A**	0.98	1.06	0.96	1.04	58MV(B,C)060–14
CNPV*4221A**	0.97	1.05	0.95	1.04	58MV(B,C)060–14
CNPV*4821A**	0.99	1.05	0.97	1.03	58MV(B,C)060–14
CSPH*3612A**	0.98	1.06	0.97	1.04	58MV(B,C)060–14
CSPH*4212A**	0.99	1.06	0.97	1.03	58MV(B,C)060–14
CSPH*4812A**	0.99	1.06	0.97	1.03	58MV(B,C)060–14
CAP**3619A**	0.96	1.07	0.94	1.05	58MV(B,C)080–14
CAP**3621A**	0.96	1.06	0.95	1.04	58MV(B,C)080–14
CAP**4221A**	0.97	1.07	0.95	1.05	58MV(B,C)080–14
CAP**4224A**	0.97	1.07	0.95	1.04	58MV(B,C)080–14
CAP**4821A**	0.98	1.08	0.96	1.04	58MV(B,C)080–14
CAP**4823A**	0.98	1.09	0.96	1.04	58MV(B,C)080–14
CAP**4824A**	0.98	1.06	0.96	1.04	58MV(B,C)080–14
CNPH*3617A**	0.96	1.07	0.94	1.06	58MV(B,C)080–14
CNPH*4221A**	0.97	1.06	0.95	1.05	58MV(B,C)080–14
CNPH*4321A**	1.00	1.07	0.97	1.03	58MV(B,C)080–14
CNPH*4821A**	0.99	1.05	0.97	1.04	58MV(B,C)080–14
CNPV*3621A**	0.96	1.07	0.94	1.05	58MV(B,C)080–14
CNPV*4221A**	0.97	1.06	0.95	1.05	58MV(B,C)080–14
CNPV*4324A**	1.00	1.06	0.98	1.03	58MV(B,C)080–14
CNPV*4821A**	0.99	1.06	0.97	1.04	58MV(B,C)080–14

Cooling Indoor Model	High Speed Cap.	Power	Low Speed Cap.	Power	Furnace Model
CNPV*4824A**	0.99	1.06	0.97	1.04	58MV(B,C)080–14
CSPH*3612A**	0.98	1.06	0.96	1.05	58MV(B,C)080–14
CSPH*4212A**	0.99	1.06	0.97	1.04	58MV(B,C)080–14
CSPH*4812A**	0.99	1.06	0.97	1.05	58MV(B,C)080–14
CAP**3619A**	0.96	1.06	0.94	1.04	58MV(B,C)080–20
CAP**3621A**	0.96	1.06	0.95	1.04	58MV(B,C)080–20
CAP**4221A**	0.97	1.06	0.95	1.04	58MV(B,C)080–20
CAP**4224A**	0.97	1.07	0.95	1.04	58MV(B,C)080–20
CAP**4821A**	0.98	1.06	0.96	1.04	58MV(B,C)080–20
CAP**4823A**	0.98	1.06	0.96	1.04	58MV(B,C)080–20
CAP**4824A**	0.98	1.06	0.96	1.04	58MV(B,C)080–20
CNPH*3617A**	0.96	1.07	0.94	1.05	58MV(B,C)080–20
CNPH*4221A**	0.97	1.05	0.95	1.05	58MV(B,C)080–20
CNPH*4321A**	1.00	1.05	0.98	1.04	58MV(B,C)080–20
CNPH*4821A**	0.99	1.05	0.97	1.04	58MV(B,C)080–20
CNPV*3621A**	0.96	1.06	0.94	1.05	58MV(B,C)080–20
CNPV*4221A**	0.97	1.05	0.95	1.05	58MV(B,C)080–20
CNPV*4324A**	1.00	1.05	0.98	1.03	58MV(B,C)080–20
CNPV*4821A**	0.99	1.05	0.97	1.04	58MV(B,C)080–20
CNPV*4824A**	0.99	1.05	0.97	1.04	58MV(B,C)080–20
CSPH*3612A**	0.98	1.06	0.96	1.05	58MV(B,C)080–20
CSPH*4212A**	0.99	1.05	0.97	1.04	58MV(B,C)080–20
CSPH*4812A**	0.99	1.05	0.97	1.04	58MV(B,C)080–20
CAP**3619A**	0.96	1.06	0.95	1.05	58MV(B,C)100–20
CAP**3621A**	0.96	1.05	0.95	1.04	58MV(B,C)100–20
CAP**4221A**	0.97	1.05	0.95	1.04	58MV(B,C)100–20
CAP**4224A**	0.97	1.05	0.95	1.04	58MV(B,C)100–20
CAP**4821A**	0.98	1.06	0.96	1.03	58MV(B,C)100–20
CAP**4823A**	0.98	1.06	0.96	1.03	58MV(B,C)100–20
CAP**4824A**	0.98	1.05	0.96	1.03	58MV(B,C)100–20
CNPH*3617A**	0.96	1.08	0.94	1.05	58MV(B,C)100–20
CNPH*4221A**	0.97	1.04	0.95	1.05	58MV(B,C)100–20
CNPH*4321A**	1.00	1.06	0.98	1.04	58MV(B,C)100–20
CNPH*4821A**	0.99	1.05	0.97	1.03	58MV(B,C)100–20
CNPV*3621A**	0.96	1.06	0.94	1.05	58MV(B,C)100–20
CNPV*4221A**	0.97	1.04	0.95	1.05	58MV(B,C)100–20
CNPV*4324A**	1.00	1.04	0.98	1.03	58MV(B,C)100–20
CNPV*4821A**	0.99	1.05	0.97	1.03	58MV(B,C)100–20
CNPV*4824A**	0.99	1.05	0.97	1.03	58MV(B,C)100–20
CSPH*3612A**	0.98	1.06	0.96	1.04	58MV(B,C)100–20
CSPH*4212A**	0.99	1.06	0.97	1.04	58MV(B,C)100–20
CSPH*4812A**	0.99	1.07	0.97	1.04	58MV(B,C)100–20
CAP**4224A**	0.97	1.04	0.95	1.03	58MV(B,C)120–20
CAP**4823A**	0.99	1.05	0.97	1.03	58MV(B,C)120–20
CAP**4824A**	0.99	1.05	0.97	1.03	58MV(B,C)120–20
CNPH*3617A**	0.96	1.06	0.94	1.04	58MV(B,C)120–20
CNPH*4221A**	0.97	1.04	0.95	1.03	58MV(B,C)120–20
CNPH*4321A**	1.01	1.05	0.98	1.02	58MV(B,C)120–20
CNPH*4821A**	0.99	1.05	0.97	1.02	58MV(B,C)120–20
CNPV*4324A**	1.01	1.04	0.98	1.02	58MV(B,C)120–20
CNPV*4824A**	0.99	1.04	0.97	1.02	58MV(B,C)120–20
CSPH*3612A**	0.99	1.05	0.97	1.04	58MV(B,C)120–20
CSPH*4212A**	0.99	1.06	0.97	1.03	58MV(B,C)120–20
CSPH*4812A**	1.00	1.06	0.97	1.03	58MV(B,C)120–20
CAP**4224A**	0.97	1.06	0.95	1.03	58MVB040–14
CAP**4823A**	0.98	1.06	0.96	1.03	58MVB040–14
CAP**4824A**	0.98	1.06	0.97	1.03	58MVB040–14
CNPH*3617A**	0.96	1.07	0.94	1.05	58MVB040–14
CNPH*4221A**	0.97	1.05	0.95	1.04	58MVB040–14
CNPH*4321A**	1.00	1.07	0.98	1.03	58MVB040–14
CNPH*4821A**	0.99	1.07	0.97	1.03	58MVB040–14

DETAILED COOLING CAPACITIES# (CONTINUED)

24ANB136A30 Outdoor Section With FE5ANB004 Indoor Section**

Cooling Indoor Model	High Speed Cap.	Power	Low Speed Cap.	Power	Furnace Model
CNPV*4324A**	1.00	1.06	0.98	1.02	58MVB040–14
CNPV*4824A**	0.99	1.06	0.97	1.03	58MVB040–14
CSPH*3612A**	0.98	1.06	0.97	1.05	58MVB040–14
CSPH*4212A**	0.99	1.05	0.97	1.04	58MVB040–14
CSPH*4812A**	0.99	1.05	0.97	1.04	58MVB040–14
CAP**3614A**	0.94	1.07	0.92	1.04	58PH*045–08
CAP**3617A**	0.95	1.09	0.96	1.23	58PH*045–08
CAP**4817A**	0.98	1.10	0.95	1.04	58PH*045–08
CNPH*3617A**	0.94	1.10	0.92	1.04	58PH*045–08
CNPH*4221A**	0.95	1.07	0.93	1.04	58PH*045–08
CNPH*4321A**	0.98	1.10	0.95	1.03	58PH*045–08
CNPH*4821A**	0.97	1.08	0.94	1.03	58PH*045–08
CNPV*3617A**	0.94	1.10	0.92	1.04	58PH*045–08
CNPV*3717A**	0.98	1.10	0.95	1.04	58PH*045–08
CNPV*4217A**	0.96	1.08	0.94	1.04	58PH*045–08
CSPH*3612A**	0.97	1.09	0.94	1.03	58PH*045–08
CSPH*4212A**	0.97	1.09	0.94	1.03	58PH*045–08
CSPH*4812A**	0.98	1.08	0.95	1.03	58PH*045–08
CAP**3617A**	0.96	1.11	0.95	1.10	58PH*070–16
CAP**3619A**	0.96	1.14	0.95	1.10	58PH*070–16
CAP**3621A**	0.96	1.12	0.95	1.09	58PH*070–16
CAP**4221A**	0.97	1.13	0.96	1.09	58PH*070–16
CAP**4817A**	0.99	1.12	0.98	1.09	58PH*070–16
CAP**4821A**	0.98	1.10	0.97	1.09	58PH*070–16
CNPH*3617A**	0.95	1.05	0.95	1.11	58PH*070–16
CNPH*4221A**	0.96	1.05	0.96	1.10	58PH*070–16
CNPH*4321A**	0.99	1.05	0.99	1.09	58PH*070–16
CNPH*4821A**	0.98	1.05	0.98	1.10	58PH*070–16
CNPV*3617A**	0.95	1.05	0.95	1.11	58PH*070–16
CNPV*3621A**	0.95	1.05	0.95	1.10	58PH*070–16
CNPV*3717A**	0.99	1.05	0.99	1.10	58PH*070–16
CNPV*4217A**	0.97	1.05	0.97	1.10	58PH*070–16
CNPV*4221A**	0.96	1.05	0.96	1.10	58PH*070–16
CNPV*4821A**	0.98	1.05	0.98	1.10	58PH*070–16
CSPH*3612A**	0.97	1.05	0.97	1.10	58PH*070–16
CSPH*4212A**	0.98	1.05	0.98	1.10	58PH*070–16
CSPH*4812A**	0.98	1.06	0.98	1.10	58PH*070–16
CAP**3619A**	0.96	1.06	0.95	1.07	58PH*090–16
CAP**3621A**	0.97	1.05	0.96	1.07	58PH*090–16
CAP**4221A**	0.98	1.05	0.97	1.07	58PH*090–16
CAP**4224A**	0.98	1.06	0.97	1.06	58PH*090–16
CAP**4821A**	0.99	1.05	0.98	1.07	58PH*090–16
CAP**4823A**	0.99	1.07	0.98	1.07	58PH*090–16
CAP**4824A**	0.99	1.06	0.98	1.06	58PH*090–16
CNPH*3617A**	0.96	1.05	0.95	1.08	58PH*090–16
CNPH*4221A**	0.97	1.04	0.97	1.07	58PH*090–16
CNPH*4321A**	1.01	1.08	1.00	1.07	58PH*090–16
CNPH*4821A**	0.99	1.04	0.99	1.07	58PH*090–16
CNPV*3621A**	0.96	1.05	0.95	1.08	58PH*090–16
CNPV*4221A**	0.97	1.04	0.97	1.07	58PH*090–16
CNPV*4324A**	1.00	1.07	1.00	1.06	58PH*090–16
CNPV*4821A**	0.99	1.04	0.99	1.07	58PH*090–16
CNPV*4824A**	0.99	1.06	0.99	1.07	58PH*090–16
CSPH*3612A**	0.99	1.05	0.97	1.07	58PH*090–16
CSPH*4212A**	0.99	1.05	0.99	1.07	58PH*090–16
CSPH*4812A**	1.00	1.05	0.99	1.07	58PH*090–16
CAP**3619A**	0.97	1.07	0.97	1.09	58PH*110–20
CAP**3621A**	0.97	1.05	0.98	1.09	58PH*110–20
CAP**4221A**	0.98	1.06	0.99	1.09	58PH*110–20
CAP**4224A**	0.98	1.06	0.99	1.09	58PH*110–20
CAP**4821A**	0.99	1.06	1.00	1.09	58PH*110–20

Cooling Indoor Model	High Speed Cap.	Power	Low Speed Cap.	Power	Furnace Model
CAP**4823A**	0.99	1.06	1.00	1.09	58PH*110–20
CAP**4824A**	0.99	1.06	1.01	1.09	58PH*110–20
CNPH*3617A**	0.96	1.06	0.97	1.11	58PH*110–20
CNPH*4221A**	0.98	1.06	0.99	1.10	58PH*110–20
CNPH*4321A**	1.00	1.04	1.02	1.09	58PH*110–20
CNPH*4821A**	1.00	1.07	1.01	1.09	58PH*110–20
CNPV*3621A**	0.96	1.06	0.97	1.10	58PH*110–20
CNPV*4221A**	0.98	1.06	0.99	1.10	58PH*110–20
CNPV*4324A**	1.00	1.04	1.03	1.09	58PH*110–20
CNPV*4821A**	1.00	1.07	1.01	1.09	58PH*110–20
CNPV*4824A**	1.00	1.07	1.01	1.09	58PH*110–20
CSPH*3612A**	0.99	1.05	1.00	1.10	58PH*110–20
CSPH*4212A**	1.00	1.07	1.01	1.09	58PH*110–20
CSPH*4812A**	1.00	1.07	1.01	1.10	58PH*110–20
CAP**3617A**	0.97	1.07	0.95	1.04	58UVB060–14
CAP**3619A**	0.97	1.09	0.95	1.04	58UVB060–14
CAP**3621A**	0.97	1.09	0.95	1.03	58UVB060–14
CAP**4221A**	0.97	1.08	0.95	1.03	58UVB060–14
CAP**4817A**	1.00	1.07	0.97	1.04	58UVB060–14
CAP**4821A**	0.98	1.05	0.97	1.04	58UVB060–14
CNPV*3617A**	0.95	1.05	0.94	1.05	58UVB060–14
CNPV*3621A**	0.95	1.04	0.94	1.05	58UVB060–14
CNPV*3717A**	0.99	1.05	0.98	1.04	58UVB060–14
CNPV*4217A**	0.97	1.05	0.96	1.05	58UVB060–14
CNPV*4221A**	0.96	1.04	0.95	1.05	58UVB060–14
CNPV*4821A**	0.98	1.04	0.97	1.03	58UVB060–14
CAP**3619A**	0.96	1.10	0.94	1.04	58UVB080–14
CAP**3621A**	0.96	1.07	0.94	1.03	58UVB080–14
CAP**4221A**	0.97	1.08	0.94	1.03	58UVB080–14
CAP**4224A**	0.97	1.09	0.97	1.11	58UVB080–14
CAP**4821A**	0.98	1.08	0.95	1.03	58UVB080–14
CAP**4823A**	0.98	1.10	0.99	1.12	58UVB080–14
CAP**4824A**	0.98	1.07	0.99	1.11	58UVB080–14
CNPV*3621A**	0.95	1.05	0.94	1.05	58UVB080–14
CNPV*4221A**	0.96	1.05	0.94	1.05	58UVB080–14
CNPV*4324A**	0.99	1.05	0.97	1.02	58UVB080–14
CNPV*4821A**	0.97	1.04	0.96	1.04	58UVB080–14
CNPV*4824A**	0.97	1.04	0.96	1.04	58UVB080–14
CAP**3619A**	0.96	1.08	0.94	1.05	58UVB080–20
CAP**3621A**	0.96	1.06	0.94	1.04	58UVB080–20
CAP**4221A**	0.97	1.06	0.95	1.04	58UVB080–20
CAP**4224A**	0.97	1.08	0.95	1.04	58UVB080–20
CAP**4821A**	0.98	1.06	0.99	1.10	58UVB080–20
CAP**4823A**	0.98	1.09	0.96	1.04	58UVB080–20
CAP**4824A**	0.99	1.09	0.96	1.04	58UVB080–20
CNPV*3621A**	0.95	1.05	0.94	1.06	58UVB080–20
CNPV*4221A**	0.96	1.03	0.95	1.05	58UVB080–20
CNPV*4324A**	0.99	1.04	0.97	1.03	58UVB080–20
CNPV*4821A**	0.97	1.04	0.96	1.04	58UVB080–20
CNPV*4824A**	0.97	1.04	0.96	1.04	58UVB080–20
CAP**3619A**	0.96	1.07	0.94	1.04	58UVB100–20
CAP**3621A**	0.96	1.04	0.94	1.03	58UVB100–20
CAP**4221A**	0.97	1.05	0.97	1.10	58UVB100–20
CAP**4224A**	0.97	1.07	0.94	1.03	58UVB100–20
CAP**4821A**	0.98	1.06	0.95	1.03	58UVB100–20
CAP**4823A**	0.98	1.09	0.95	1.03	58UVB100–20
CAP**4824A**	0.98	1.09	0.99	1.10	58UVB100–20
CNPV*3621A**	0.95	1.04	0.93	1.04	58UVB100–20
CNPV*4221A**	0.96	1.03	0.94	1.05	58UVB100–20
CNPV*4324A**	0.99	1.03	0.97	1.03	58UVB100–20
CNPV*4821A**	0.98	1.04	0.95	1.03	58UVB100–20

Cooling Indoor Model	High Speed Cap.	Power	Low Speed Cap.	Power	Furnace Model
CNPV*4824A**	0.98	1.04	0.95	1.03	58UVB100–20
CAP**4224A**	0.97	1.04	0.95	1.02	58UVB120–20
CAP**4823A**	0.99	1.07	0.96	1.02	58UVB120–20
CAP**4824A**	0.99	1.07	0.99	1.07	58UVB120–20
CNPV*4324A**	1.01	1.04	0.97	1.01	58UVB120–20
CNPV*4824A**	0.99	1.04	0.97	1.02	58UVB120–20
CAP**3617A**	0.95	1.05	0.88	0.99	58VLR105–12
CAP**3621A**	0.95	1.05	0.88	0.98	58VLR105–12
CAP**4221A**	0.96	1.06	0.89	0.99	58VLR105–12
CAP**4817A**	0.98	1.06	0.90	0.98	58VLR105–12
CAP**4821A**	0.97	1.05	0.90	0.98	58VLR105–12
CNPH*3617A**	0.95	1.05	0.88	0.98	58VLR105–12
CNPH*4221A**	0.96	1.04	0.89	0.99	58VLR105–12
CNPH*4321A**	0.99	1.05	0.91	0.98	58VLR105–12
CNPV*3617A**	0.95	1.05	0.88	0.98	58VLR105–12
CNPV*3621A**	0.95	1.05	0.88	0.98	58VLR105–12
CNPV*3717A**	0.99	1.06	0.91	0.99	58VLR105–12
CNPV*4217A**	0.97	1.05	0.90	0.99	58VLR105–12
CNPV*4221A**	0.96	1.03	0.89	0.99	58VLR105–12
CNPV*4821A**	0.97	1.05	0.90	0.98	58VLR105–12
CSPH*3612A**	0.97	1.04	0.90	0.99	58VLR105–12
CSPH*4212A**	0.98	1.04	0.90	0.99	58VLR105–12
CSPH*4812A**	0.98	1.06	0.90	0.98	58VLR105–12
CAP**3619A**	0.96	1.06	0.90	0.98	58VLR120–20
CAP**3621A**	0.96	1.03	0.90	0.97	58VLR120–20
CAP**4221A**	0.97	1.04	0.91	0.98	58VLR120–20
CAP**4224A**	0.97	1.05	0.91	0.98	58VLR120–20
CAP**4821A**	0.99	1.07	0.92	0.98	58VLR120–20
CAP**4823A**	0.99	1.07	0.92	0.98	58VLR120–20
CAP**4824A**	0.99	1.05	0.92	0.98	58VLR120–20
CNPH*3617A**	0.96	1.06	0.90	0.99	58VLR120–20
CNPH*4221A**	0.97	1.04	0.91	0.98	58VLR120–20
CNPH*4321A**	1.01	1.07	0.94	0.98	58VLR120–20
CNPH*4821A**	0.99	1.05	0.92	0.97	58VLR120–20
CNPV*3621A**	0.96	1.05	0.90	0.99	58VLR120–20
CNPV*4221A**	0.97	1.04	0.91	0.98	58VLR120–20
CNPV*4324A**	1.01	1.05	0.94	0.97	58VLR120–20
CNPV*4821A**	0.99	1.03	0.92	0.97	58VLR120–20
CNPV*4824A**	0.99	1.05	0.92	0.97	58VLR120–20
CSPH*3612A**	0.98	1.06	0.92	0.99	58VLR120–20
CSPH*4212A**	0.99	1.06	0.92	0.98	58VLR120–20
CSPH*4812A**	0.99	1.06	0.93	0.98	58VLR120–20
CAP**3619A**	0.96	1.06	0.89	1.00	58VMR120–20
CAP**3621A**	0.96	1.05	0.89	1.00	58VMR120–20
CAP**4221A**	0.97	1.05	0.90	1.00	58VMR120–20
CAP**4224A**	0.97	1.07	0.90	1.00	58VMR120–20
CAP**4821A**	0.98	1.06	0.90	1.00	58VMR120–20
CAP**4823A**	0.98	1.06	0.90	1.00	58VMR120–20
CAP**4824A**	0.98	1.06	0.90	1.00	58VMR120–20
CNPH*3617A**	0.96	1.06	0.89	1.01	58VMR120–20
CNPH*4221A**	0.97	1.05	0.90	1.00	58VMR120–20
CNPH*4321A**	1.00	1.04	0.92	1.00	58VMR120–20
CNPH*4821A**	0.99	1.05	0.91	1.00	58VMR120–20
CNPV*3621A**	0.96	1.05	0.89	1.01	58VMR120–20
CNPV*4221A**	0.97	1.06	0.90	1.00	58VMR120–20
CNPV*4324A**	1.00	1.04	0.92	1.00	58VMR120–20
CNPV*4821A**	0.99	1.05	0.91	1.00	58VMR120–20
CNPV*4824A**	0.99	1.05	0.91	1.00	58VMR120–20
CSPH*3612A**	0.98	1.05	0.91	1.01	58VMR120–20
CSPH*4212A**	0.99	1.05	0.91	1.00	58VMR120–20
CSPH*4812A**	0.99	1.08	0.92	1.00	58VMR120–20

DETAILED COOLING CAPACITIES# (CONTINUED)

24ANB136A**30 Outdoor Section With FE5ANB004 Indoor Section

Cooling Indoor Model	High Speed Cap.	Power	Low Speed Cap.	Power	Furnace Model
CAP**3617A**	0.96	1.10	0.94	1.08	59*N*A060V17**14
CAP**3619A**	0.96	1.10	0.94	1.08	59*N*A060V17**14
CAP**3621A**	0.96	1.09	0.94	1.07	59*N*A060V17**14
CAP**4221A**	0.97	1.09	0.95	1.07	59*N*A060V17**14
CAP**4817A**	0.99	1.10	0.97	1.08	59*N*A060V17**14
CAP**4821A**	0.99	1.09	0.96	1.07	59*N*A060V17**14
CNPH*3617A**	0.96	1.11	0.94	1.09	59*N*A060V17**14
CNPH*4221A**	0.97	1.10	0.95	1.08	59*N*A060V17**14
CNPH*4321A**	1.00	1.09	0.97	1.07	59*N*A060V17**14
CNPH*4821A**	0.99	1.09	0.96	1.07	59*N*A060V17**14
CNPV*3617A**	0.96	1.11	0.94	1.09	59*N*A060V17**14
CNPV*3621A**	0.96	1.11	0.94	1.09	59*N*A060V17**14
CNPV*3717A**	1.00	1.10	0.97	1.08	59*N*A060V17**14
CNPV*4217A**	0.98	1.10	0.95	1.08	59*N*A060V17**14
CNPV*4221A**	0.97	1.10	0.95	1.08	59*N*A060V17**14
CNPV*4821A**	0.99	1.09	0.96	1.07	59*N*A060V17**14
CSPH*3612A**	0.98	1.10	0.96	1.08	59*N*A060V17**14
CSPH*4212A**	0.99	1.10	0.97	1.08	59*N*A060V17**14
CSPH*4812A**	0.99	1.10	0.97	1.07	59*N*A060V17**14
CAP**3617A**	0.96	1.07	0.94	1.06	59*N*A080V17**14
CAP**3619A**	0.96	1.07	0.94	1.06	59*N*A080V17**14
CAP**3621A**	0.96	1.06	0.94	1.05	59*N*A080V17**14
CAP**4221A**	0.97	1.07	0.95	1.05	59*N*A080V17**14
CAP**4817A**	0.99	1.09	0.97	1.06	59*N*A080V17**14
CAP**4821A**	0.98	1.08	0.96	1.05	59*N*A080V17**14
CNPH*3617A**	0.96	1.07	0.94	1.07	59*N*A080V17**14
CNPH*4221A**	0.97	1.07	0.95	1.06	59*N*A080V17**14
CNPH*4321A**	1.00	1.07	0.97	1.05	59*N*A080V17**14
CNPH*4821A**	0.99	1.07	0.97	1.05	59*N*A080V17**14
CNPV*3617A**	0.96	1.07	0.94	1.07	59*N*A080V17**14
CNPV*3621A**	0.96	1.07	0.94	1.07	59*N*A080V17**14
CNPV*3717A**	0.99	1.10	0.97	1.06	59*N*A080V17**14
CNPV*4217A**	0.97	1.09	0.96	1.07	59*N*A080V17**14
CNPV*4221A**	0.97	1.07	0.95	1.06	59*N*A080V17**14
CNPV*4821A**	0.99	1.07	0.97	1.05	59*N*A080V17**14
CSPH*3612A**	0.98	1.07	0.96	1.06	59*N*A080V17**14
CSPH*4212A**	0.99	1.07	0.97	1.06	59*N*A080V17**14
CSPH*4812A**	0.99	1.07	0.97	1.06	59*N*A080V17**14
CAP**3619A**	0.96	1.06	0.94	1.05	59*N*A100V21**20
CAP**3621A**	0.96	1.05	0.94	1.05	59*N*A100V21**20
CAP**4221A**	0.97	1.05	0.95	1.05	59*N*A100V21**20
CAP**4224A**	0.97	1.05	0.95	1.04	59*N*A100V21**20
CAP**4821A**	0.98	1.06	0.96	1.05	59*N*A100V21**20
CAP**4823A**	0.98	1.06	0.96	1.05	59*N*A100V21**20
CAP**4824A**	0.98	1.05	0.96	1.05	59*N*A100V21**20
CNPH*3617A**	0.96	1.08	0.94	1.07	59*N*A100V21**20
CNPH*4221A**	0.97	1.06	0.95	1.06	59*N*A100V21**20
CNPH*4321A**	1.00	1.06	0.97	1.04	59*N*A100V21**20
CNPH*4821A**	0.99	1.05	0.97	1.05	59*N*A100V21**20
CNPV*3621A**	0.96	1.06	0.94	1.06	59*N*A100V21**20
CNPV*4221A**	0.97	1.06	0.95	1.06	59*N*A100V21**20
CNPV*4324A**	1.00	1.04	0.97	1.03	59*N*A100V21**20
CNPV*4821A**	0.99	1.05	0.97	1.05	59*N*A100V21**20
CNPV*4824A**	0.99	1.05	0.97	1.05	59*N*A100V21**20
CSPH*3612A**	0.98	1.06	0.96	1.06	59*N*A100V21**20
CSPH*4212A**	0.99	1.06	0.97	1.05	59*N*A100V21**20
CSPH*4812A**	0.99	1.07	0.97	1.05	59*N*A100V21**20
CAP**4224A**	0.97	1.04	0.95	1.04	59*N*A120V24**22
CAP**4823A**	0.99	1.05	0.96	1.04	59*N*A120V24**22
CAP**4824A**	0.99	1.05	0.96	1.03	59*N*A120V24**22
CNPH*3617A**	0.96	1.06	0.94	1.05	59*N*A120V24**22

Cooling Indoor Model	High Speed Cap.	Power	Low Speed Cap.	Power	Furnace Model
CNPH*4221A**	0.97	1.04	0.95	1.05	59*N*A120V24**22
CNPH*4321A**	1.01	1.05	0.98	1.04	59*N*A120V24**22
CNPH*4821A**	0.99	1.05	0.97	1.03	59*N*A120V24**22
CNPV*4324A**	1.01	1.04	0.98	1.03	59*N*A120V24**22
CNPV*4824A**	0.99	1.04	0.97	1.03	59*N*A120V24**22
CSPH*3612A**	0.99	1.05	0.96	1.04	59*N*A120V24**22
CSPH*4212A**	0.99	1.06	0.97	1.04	59*N*A120V24**22
CSPH*4812A**	1.00	1.06	0.97	1.04	59*N*A120V24**22
CAP**3617A**	0.96	1.08	0.92	1.02	59*P5A060E17**14
CAP**3619A**	0.96	1.08	0.92	1.02	59*P5A060E17**14
CAP**3621A**	0.96	1.08	0.92	1.02	59*P5A060E17**14
CAP**4221A**	0.97	1.09	0.92	1.02	59*P5A060E17**14
CAP**4817A**	0.99	1.09	0.94	1.02	59*P5A060E17**14
CAP**4821A**	0.98	1.09	0.94	1.02	59*P5A060E17**14
CNPH*3617A**	0.96	1.07	0.91	1.02	59*P5A060E17**14
CNPH*4221A**	0.97	1.09	0.92	1.03	59*P5A060E17**14
CNPH*4321A**	1.00	1.08	0.95	1.02	59*P5A060E17**14
CNPH*4821A**	0.99	1.09	0.94	1.02	59*P5A060E17**14
CNPV*3617A**	0.96	1.07	0.91	1.02	59*P5A060E17**14
CNPV*3621A**	0.96	1.07	0.91	1.02	59*P5A060E17**14
CNPV*3717A**	1.00	1.08	0.95	1.02	59*P5A060E17**14
CNPV*4217A**	0.98	1.08	0.93	1.03	59*P5A060E17**14
CNPV*4221A**	0.97	1.09	0.92	1.03	59*P5A060E17**14
CNPV*4821A**	0.99	1.09	0.94	1.02	59*P5A060E17**14
CSPH*3612A**	0.98	1.09	0.93	1.02	59*P5A060E17**14
CSPH*4212A**	0.99	1.09	0.94	1.02	59*P5A060E17**14
CSPH*4812A**	0.99	1.10	0.94	1.02	59*P5A060E17**14
CAP**3617A**	0.96	1.06	0.95	1.11	59*P5A080E17**16
CAP**3619A**	0.96	1.08	0.95	1.11	59*P5A080E17**16
CAP**3621A**	0.96	1.06	0.96	1.11	59*P5A080E17**16
CAP**4221A**	0.97	1.08	0.97	1.11	59*P5A080E17**16
CAP**4817A**	0.99	1.06	0.99	1.11	59*P5A080E17**16
CAP**4821A**	0.98	1.09	0.98	1.11	59*P5A080E17**16
CNPH*3617A**	0.96	1.06	0.95	1.12	59*P5A080E17**16
CNPH*4221A**	0.97	1.05	0.97	1.11	59*P5A080E17**16
CNPH*4321A**	1.00	1.07	0.99	1.10	59*P5A080E17**16
CNPH*4821A**	0.99	1.07	0.99	1.11	59*P5A080E17**16
CNPV*3617A**	0.96	1.06	0.95	1.12	59*P5A080E17**16
CNPV*3621A**	0.96	1.05	0.95	1.11	59*P5A080E17**16
CNPV*3717A**	1.00	1.08	0.99	1.11	59*P5A080E17**16
CNPV*4217A**	0.98	1.08	0.97	1.11	59*P5A080E17**16
CNPV*4221A**	0.97	1.05	0.97	1.11	59*P5A080E17**16
CNPV*4821A**	0.99	1.07	0.99	1.11	59*P5A080E17**16
CSPH*3612A**	0.98	1.06	0.98	1.11	59*P5A080E17**16
CSPH*4212A**	0.99	1.05	0.99	1.11	59*P5A080E17**16
CSPH*4812A**	0.99	1.08	0.99	1.11	59*P5A080E17**16
CAP**3619A**	0.96	1.07	0.95	1.07	OVLAAB048112
CAP**3621A**	0.96	1.06	0.95	1.06	OVLAAB048112
CAP**4221A**	0.96	1.06	0.95	1.06	OVLAAB048112
CAP**4224A**	0.96	1.06	0.95	1.06	OVLAAB048112
CAP**4821A**	0.98	1.08	0.97	1.06	OVLAAB048112
CAP**4823A**	0.98	1.08	0.97	1.06	OVLAAB048112
CAP**4824A**	0.99	1.09	0.99	1.10	OVLAAB048112
CNPH*3617A**	0.95	1.07	0.94	1.07	OVLAAB048112
CNPH*4221A**	0.96	1.08	0.95	1.07	OVLAAB048112
CNPH*4321A**	0.99	1.08	0.98	1.05	OVLAAB048112
CNPH*4821A**	0.99	1.10	0.99	1.09	OVLAAB048112
CNPV*3621A**	0.95	1.07	0.94	1.07	OVLAAB048112
CNPV*4221A**	0.96	1.08	0.95	1.07	OVLAAB048112
CNPV*4324A**	0.99	1.06	0.98	1.05	OVLAAB048112
CNPV*4821A**	0.98	1.06	0.97	1.05	OVLAAB048112

Cooling Indoor Model	High Speed Cap.	Power	Low Speed Cap.	Power	Furnace Model
CNPV*4824A**	0.99	1.10	0.99	1.09	OVLAAB048112
CSPH*3612A**	0.98	1.08	0.97	1.07	OVLAAB048112
CSPH*4212A**	0.98	1.09	0.97	1.06	OVLAAB048112
CSPH*4812A**	1.00	1.11	0.99	1.11	OVLAAB048112
CAP**4224A**	0.98	1.04	0.98	1.06	OVLAAB060154
CAP**4824A**	0.99	1.06	0.99	1.06	OVLAAB060154
CNPH*3617A**	0.97	1.07	0.97	1.08	OVLAAB060154
CNPH*4221A**	0.98	1.06	0.98	1.07	OVLAAB060154
CNPH*4321A**	1.00	1.04	1.01	1.06	OVLAAB060154
CNPH*4821A**	1.00	1.07	0.99	1.05	OVLAAB060154
CNPV*4324A**	1.00	1.04	1.01	1.05	OVLAAB060154
CNPV*4824A**	1.00	1.07	0.99	1.05	OVLAAB060154
CSPH*3612A**	0.99	1.06	0.99	1.07	OVLAAB060154
CSPH*4212A**	1.00	1.07	1.00	1.07	OVLAAB060154
CSPH*4812A**	1.01	1.07	1.00	1.06	OVLAAB060154
CAP**3617A**	0.95	1.05	0.94	1.04	OVMAAB042112
CAP**3619A**	0.95	1.05	0.94	1.04	OVMAAB042112
CAP**3621A**	0.95	1.05	0.94	1.03	OVMAAB042112
CAP**4221A**	0.97	1.07	0.97	1.08	OVMAAB042112
CAP**4817A**	0.98	1.06	0.96	1.03	OVMAAB042112
CAP**4821A**	0.97	1.05	0.95	1.02	OVMAAB042112
CNPH*3617A**	0.95	1.06	0.94	1.04	OVMAAB042112
CNPH*4221A**	0.96	1.06	0.95	1.04	OVMAAB042112
CNPH*4321A**	1.00	1.08	0.99	1.07	OVMAAB042112
CNPH*4821A**	0.98	1.06	0.96	1.02	OVMAAB042112
CNPV*3617A**	0.95	1.06	0.94	1.04	OVMAAB042112
CNPV*3621A**	0.95	1.07	0.94	1.04	OVMAAB042112
CNPV*3717A**	0.99	1.07	0.97	1.03	OVMAAB042112
CNPV*4217A**	0.97	1.07	0.95	1.04	OVMAAB042112
CNPV*4221A**	0.96	1.06	0.95	1.04	OVMAAB042112
CNPV*4821A**	0.99	1.07	0.98	1.07	OVMAAB042112
CSPH*3612A**	0.98	1.09	0.98	1.09	OVMAAB042112
CSPH*4212A**	0.98	1.06	0.96	1.03	OVMAAB042112
CSPH*4812A**	0.98	1.06	0.97	1.03	OVMAAB042112

See notes on page 48

DETAILED COOLING CAPACITIES# (CONTINUED)

EVAPORATOR AIR		CONDENSER ENTERING AIR TEMPERATURES °F (°C)																	
		75 (23.9)			85 (29.4)			95 (35)			105 (40.6)			115 (46.1)			125 (51.7)		
CFM	EWB °F (°C)	Capacity MBtuh		Total Sys. KW**	Capacity MBtuh		Total Sys. KW**	Capacity MBtuh		Total Sys. KW**	Capacity MBtuh		Total Sys. KW**	Capacity MBtuh		Total Sys. KW**	Capacity MBtuh		Total Sys. KW**
		Total	Sens‡		Total	Sens‡		Total	Sens‡		Total	Sens‡		Total	Sens‡		Total	Sens‡	
24ANB148A30 Outdoor Section With FE4ANB006 Indoor Section High**																			
1200	57 (13.9)	42.82	42.82	2.74	41.85	41.85	3.08	40.71	40.71	3.44	39.37	39.37	3.85	37.79	37.79	4.31	35.95	35.95	4.83
	62 (16.7)	45.47	39.35	2.76	44.03	38.89	3.10	42.41	38.35	3.46	40.55	37.70	3.87	38.42	36.92	4.32	36.05	35.85	4.83
	63 (17.2)††	46.44	32.48	2.77	44.97	31.94	3.10	43.31	31.32	3.47	41.38	30.60	3.87	39.18	29.77	4.33	36.64	28.81	4.84
	67 (19.4)	50.20	33.72	2.81	48.60	33.18	3.14	46.78	32.57	3.50	44.69	31.85	3.91	42.29	31.02	4.37	39.53	30.06	4.88
	72 (22.2)	55.40	27.96	2.85	53.63	27.34	3.18	51.59	26.64	3.55	49.26	25.84	3.96	46.62	24.94	4.42	43.55	23.89	4.94
1300	57 (13.9)	44.10	44.10	2.77	43.07	43.07	3.11	41.86	41.86	3.47	40.44	40.44	3.88	38.77	38.77	4.34	36.80	36.80	4.86
	62 (16.7)	46.25	41.12	2.79	44.75	40.66	3.12	43.08	40.11	3.49	41.16	39.44	3.89	39.01	38.59	4.35	36.86	36.86	4.86
	63 (17.2)††	47.21	33.70	2.80	45.68	33.16	3.13	43.91	32.52	3.49	41.95	31.82	3.90	39.66	30.98	4.35	37.06	30.01	4.86
	67 (19.4)	51.01	35.02	2.83	49.34	34.49	3.16	47.43	33.87	3.53	45.13	33.09	3.93	42.80	32.32	4.39	39.94	31.35	4.91
	72 (22.2)	56.27	28.79	2.88	54.41	28.17	3.21	52.29	27.46	3.58	49.90	26.66	3.99	47.14	25.74	4.45	44.00	24.69	4.96
1400	57 (13.9)	45.26	45.26	2.80	44.08	44.08	3.13	42.90	42.90	3.51	41.41	41.41	3.92	39.65	39.65	4.37	37.59	37.59	4.89
	62 (16.7)	46.93	42.83	2.82	45.40	42.36	3.15	43.65	41.78	3.51	41.73	41.07	3.92	39.71	39.71	4.38	37.65	37.65	4.89
	63 (17.2)††	47.88	34.89	2.82	46.29	34.35	3.15	44.35	33.66	3.52	42.42	33.00	3.92	40.07	32.15	4.38	37.39	31.18	4.89
	67 (19.4)	51.71	36.29	2.86	49.97	35.76	3.19	48.00	35.14	3.56	45.48	34.30	3.96	43.22	33.59	4.42	40.30	32.62	4.93
	72 (22.2)	57.01	29.59	2.90	55.07	28.96	3.24	52.90	28.25	3.61	50.42	27.44	4.02	47.60	26.53	4.48	44.38	25.48	4.99
1600	57 (13.9)	47.30	47.30	2.86	46.09	46.09	3.19	44.61	44.61	3.56	42.91	42.91	3.97	41.17	41.17	4.44	38.90	38.90	4.96
	62 (16.7)	48.11	46.07	2.86	46.52	45.54	3.20	44.78	44.78	3.56	43.13	43.13	3.97	41.22	41.22	4.44	38.99	38.99	4.96
	63 (17.2)††	48.96	37.17	2.87	47.27	36.63	3.20	45.35	36.00	3.57	43.19	35.27	3.97	40.74	34.43	4.43	37.94	33.42	4.94
	67 (19.4)	52.83	38.74	2.91	50.99	38.21	3.24	48.90	37.59	3.60	46.54	36.87	4.01	43.90	36.04	4.47	40.86	35.05	4.98
	72 (22.2)	58.20	31.12	2.95	56.17	30.49	3.29	53.85	29.77	3.66	51.25	28.96	4.07	48.30	28.04	4.53	44.95	26.97	5.04

EVAPORATOR AIR		CONDENSER ENTERING AIR TEMPERATURES °F (°C)																	
		75 (23.9)			85 (29.4)			95 (35)			105 (40.6)			115 (46.1)			125 (51.7)		
CFM	EWB °F (°C)	Capacity MBtuh		Total Sys. KW**	Capacity MBtuh		Total Sys. KW**	Capacity MBtuh		Total Sys. KW**	Capacity MBtuh		Total Sys. KW**	Capacity MBtuh		Total Sys. KW**	Capacity MBtuh		Total Sys. KW**
		Total	Sens‡		Total	Sens‡		Total	Sens‡		Total	Sens‡		Total	Sens‡		Total	Sens‡	
24ANB148A30 Outdoor Section With FE4ANB006 Indoor Section Low**																			
960	57 (13.9)	33.67	33.67	1.85	30.66	30.66	2.12	27.68	27.68	2.41	24.75	24.75	2.75	21.87	21.87	3.15	19.04	19.04	3.60
	62 (16.7)	35.11	31.86	1.85	31.65	29.38	2.11	28.26	26.94	2.41	24.97	24.53	2.75	21.90	21.90	3.14	19.07	19.07	3.60
	63 (17.2)††	35.89	26.05	1.84	32.34	23.90	2.11	28.86	21.79	2.41	25.46	19.73	2.75	22.15	17.71	3.14	18.95	15.75	3.61
	67 (19.4)	39.09	27.22	1.83	35.21	24.99	2.09	31.42	22.81	2.39	27.70	20.67	2.72	24.10	18.58	3.11	20.61	16.55	3.56
	72 (22.2)	43.44	22.45	1.83	39.13	20.47	2.08	34.90	18.55	2.36	30.79	16.66	2.69	26.79	14.84	3.07	22.92	13.07	3.51
1040	57 (13.9)	34.72	34.72	1.86	31.60	31.60	2.12	28.51	28.51	2.42	25.45	25.45	2.75	22.46	22.46	3.14	19.54	19.54	3.60
	62 (16.7)	35.74	33.38	1.85	32.21	30.80	2.12	28.76	28.24	2.42	25.50	25.50	2.75	22.50	22.50	3.14	19.57	19.57	3.60
	63 (17.2)††	36.50	27.12	1.85	32.87	24.90	2.12	29.30	22.72	2.41	25.82	20.58	2.75	22.44	18.50	3.15	19.17	16.47	3.61
	67 (19.4)	39.72	28.36	1.84	35.75	26.05	2.10	31.86	23.79	2.39	28.07	21.58	2.73	24.39	19.42	3.11	20.84	17.32	3.57
	72 (22.2)	44.13	23.18	1.84	39.71	21.15	2.09	35.15	19.08	2.37	31.18	17.24	2.70	27.10	15.36	3.07	23.15	13.55	3.52
1120	57 (13.9)	35.69	35.69	1.86	32.45	32.45	2.13	29.25	29.25	2.42	26.10	26.10	2.76	23.01	23.01	3.15	19.97	19.97	3.60
	62 (16.7)	36.32	34.86	1.86	32.73	32.15	2.13	29.30	29.30	2.42	26.14	26.14	2.76	23.04	23.04	3.15	20.00	20.00	3.60
	63 (17.2)††	37.04	28.16	1.86	33.32	25.87	2.12	29.68	23.62	2.42	26.13	21.41	2.76	22.68	19.26	3.15	19.37	17.17	3.61
	67 (19.4)	40.27	29.46	1.85	36.20	27.08	2.11	32.24	24.75	2.40	28.38	22.47	2.73	24.64	20.24	3.12	21.03	18.07	3.57
	72 (22.2)	44.72	23.88	1.85	40.21	21.80	2.10	35.80	19.77	2.38	31.52	17.80	2.70	27.36	15.88	3.08	23.35	14.02	3.52
1280	57 (13.9)	37.37	37.37	1.88	33.94	33.94	2.14	30.54	30.54	2.43	27.20	27.20	2.77	23.92	23.92	3.15	20.72	20.72	3.60
	62 (16.7)	37.49	37.37	1.88	0.00	0.00	0.00	30.59	30.59	2.43	27.24	27.24	2.77	23.96	23.96	3.15	20.75	20.75	3.60
	63 (17.2)††	37.90	30.17	1.88	34.05	27.74	2.14	30.29	25.35	2.44	26.63	23.02	2.77	23.09	20.74	3.17	19.70	18.50	3.63
	67 (19.4)	41.15	31.61	1.87	36.95	29.09	2.13	32.87	26.62	2.42	28.89	24.19	2.75	25.04	21.83	3.13	21.35	19.52	3.58
	72 (22.2)	45.67	25.24	1.87	41.01	23.07	2.12	36.46	20.94	2.40	32.05	18.88	2.72	27.78	16.87	3.10	23.66	14.93	3.54

See notes on page 48

DETAILED COOLING CAPACITIES# (CONTINUED)

24ANB148A**30 Outdoor Section With FE4ANB006 Indoor Section

Cooling Indoor Model	High Speed Cap.	Power	Low Speed Cap.	Power	Furnace Model
*FE4ANB006	1.00	1.00	1.00	1.00	
CAP**4817A**	0.97	1.07	0.96	1.15	
CAP**4821A**	0.96	1.08	0.96	1.16	
CAP**4823A**	0.96	1.08	0.96	1.16	
CAP**4824A**	0.96	1.08	0.96	1.16	
CAP**6021A**	0.98	1.07	0.97	1.16	
CAP**6024A**	0.98	1.07	0.97	1.16	
CAP**6025A**	0.98	1.07	0.97	1.16	
CNPH*4821A**	0.96	1.06	0.96	1.16	
CNPH*6024A**	0.98	1.08	0.97	1.16	
CNPH*6124A**	0.98	1.07	0.97	1.16	
CNPV*4821A**	0.96	1.06	0.96	1.16	
CNPV*4824A**	0.96	1.06	0.96	1.16	
CNPV*6024A**	0.98	1.08	0.97	1.16	
CNPV*6124A**	0.99	1.05	0.99	1.16	
CSPH*4812A**	0.97	1.07	0.97	1.16	
CSPH*6012A**	0.98	1.07	0.97	1.15	
FE4AN(B,F)005	0.99	1.01	0.97	0.99	
FV4CN(B,F)005	0.99	1.01	0.99	1.01	
FV4CNB006	1.00	1.00	1.00	0.99	
CAP**4817A**	0.97	1.03	0.97	1.02	58CV(A,X)090–16
CAP**4821A**	0.96	1.02	0.96	1.02	58CV(A,X)090–16
CAP**6021A**	0.99	1.03	0.97	1.01	58CV(A,X)090–16
CNPH*4821A**	0.97	1.01	0.96	1.01	58CV(A,X)090–16
CNPH*6024A**	0.98	1.02	0.97	1.01	58CV(A,X)090–16
CNPH*6124A**	0.99	1.03	0.99	1.02	58CV(A,X)090–16
CNPV*4821A**	0.97	1.01	0.96	1.01	58CV(A,X)090–16
CSPH*4812A**	0.98	1.02	0.97	1.02	58CV(A,X)090–16
CSPH*6012A**	0.99	1.03	0.99	1.01	58CV(A,X)090–16
CAP**4821A**	0.97	1.01	0.96	1.01	58CV(A,X)110–20
CAP**4823A**	0.97	1.01	0.96	1.01	58CV(A,X)110–20
CAP**4824A**	0.97	1.01	0.96	1.01	58CV(A,X)110–20
CAP**6021A**	0.99	1.01	0.97	1.01	58CV(A,X)110–20
CAP**6024A**	0.99	1.01	0.97	1.01	58CV(A,X)110–20
CAP**6025A**	0.99	1.01	0.97	1.01	58CV(A,X)110–20
CNPH*4821A**	0.97	1.01	0.96	1.00	58CV(A,X)110–20
CNPH*6024A**	0.99	1.01	0.97	1.00	58CV(A,X)110–20
CNPH*6124A**	0.99	1.00	0.99	1.02	58CV(A,X)110–20
CNPV*4821A**	0.97	1.01	0.96	1.00	58CV(A,X)110–20
CNPV*4824A**	0.97	1.01	0.96	1.00	58CV(A,X)110–20
CNPV*6024A**	0.99	1.01	0.97	1.00	58CV(A,X)110–20
CNPV*6124A**	1.00	0.99	0.99	1.00	58CV(A,X)110–20
CSPH*4812A**	0.98	1.02	0.97	1.02	58CV(A,X)110–20
CSPH*6012A**	0.99	1.01	0.99	1.01	58CV(A,X)110–20
CAP**4823A**	0.97	1.01	0.96	1.00	58CV(A,X)135–22
CAP**4824A**	0.97	1.01	0.96	1.00	58CV(A,X)135–22
CAP**6024A**	0.99	1.01	0.97	1.00	58CV(A,X)135–22
CAP**6025A**	0.99	1.01	0.97	1.00	58CV(A,X)135–22
CNPH*4821A**	0.97	1.01	0.97	1.00	58CV(A,X)135–22
CNPH*6024A**	0.99	1.01	0.97	0.99	58CV(A,X)135–22
CNPH*6124A**	1.00	0.99	0.99	1.01	58CV(A,X)135–22
CNPV*4824A**	0.97	1.01	0.97	1.00	58CV(A,X)135–22
CNPV*6024A**	0.99	1.01	0.97	0.99	58CV(A,X)135–22
CNPV*6124A**	1.00	0.99	0.99	0.99	58CV(A,X)135–22
CSPH*4812A**	0.98	1.02	0.97	1.00	58CV(A,X)135–22
CSPH*6012A**	1.00	1.02	0.99	1.00	58CV(A,X)135–22
CAP**4823A**	0.97	1.01	0.96	0.99	58CV(A,X)155–22
CAP**4824A**	0.97	0.99	0.96	0.99	58CV(A,X)155–22
CAP**6024A**	0.99	1.01	0.97	0.99	58CV(A,X)155–22
CAP**6025A**	0.99	0.99	0.97	0.99	58CV(A,X)155–22
CNPH*4821A**	0.97	0.99	0.97	1.00	58CV(A,X)155–22
CNPH*6024A**	0.99	1.01	0.97	0.98	58CV(A,X)155–22
CNPH*6124A**	1.00	1.02	0.99	1.00	58CV(A,X)155–22
CNPV*4824A**	0.97	0.99	0.97	1.00	58CV(A,X)155–22
CNPV*6024A**	0.99	1.01	0.97	0.98	58CV(A,X)155–22
CNPV*6124A**	1.00	0.98	0.99	0.98	58CV(A,X)155–22
CSPH*4812A**	0.98	1.00	0.97	1.00	58CV(A,X)155–22
CSPH*6012A**	1.00	1.00	0.99	0.99	58CV(A,X)155–22
CAP**4821A**	0.97	1.07	0.97	1.06	58HDV080––20
CAP**4823A**	0.97	1.07	0.97	1.06	58HDV080––20
CAP**4824A**	0.97	1.07	0.99	1.07	58HDV080––20
CAP**6021A**	0.99	1.07	0.99	1.06	58HDV080––20
CAP**6024A**	0.99	1.07	1.00	1.07	58HDV080––20
CAP**6025A**	0.99	1.07	1.00	1.07	58HDV080––20
CNPH*4821A**	0.97	1.06	0.99	1.07	58HDV080––20
CNPH*6024A**	0.99	1.07	1.00	1.06	58HDV080––20
CNPH*6124A**	0.99	1.07	1.00	1.07	58HDV080––20
CNPV*4821A**	0.97	1.07	0.99	1.07	58HDV080––20
CNPV*4824A**	0.97	1.07	0.99	1.07	58HDV080––20
CNPV*6024A**	0.99	1.07	1.00	1.06	58HDV080––20
CNPV*6124A**	1.00	1.06	1.01	1.06	58HDV080––20
CSPH*4812A**	0.98	1.07	0.99	1.07	58HDV080––20
CSPH*6012A**	1.00	1.07	1.00	1.06	58HDV080––20
CAP**4823A**	0.96	1.06	0.97	1.05	58HDV100––20
CAP**4824A**	0.97	1.05	0.97	1.04	58HDV100––20
CAP**6024A**	0.99	1.05	0.99	1.04	58HDV100––20
CAP**6025A**	0.99	1.05	0.99	1.04	58HDV100––20
CNPH*4821A**	0.97	1.05	0.97	1.04	58HDV100––20
CNPH*6024A**	0.99	1.05	0.99	1.04	58HDV100––20
CNPH*6124A**	0.99	1.03	0.99	1.04	58HDV100––20
CNPV*4824A**	0.97	1.05	0.97	1.04	58HDV100––20
CNPV*6024A**	0.99	1.05	0.99	1.04	58HDV100––20
CNPV*6124A**	1.00	1.04	1.00	1.04	58HDV100––20
CSPH*4812A**	0.97	1.05	0.99	1.05	58HDV100––20
CSPH*6012A**	0.99	1.05	1.00	1.04	58HDV100––20
CAP**4817A**	0.97	1.05	0.97	1.04	58MEC080–16
CAP**4821A**	0.96	1.05	0.97	1.05	58MEC080–16
CAP**6021A**	0.99	1.05	0.99	1.05	58MEC080–16
CNPH*4821A**	0.97	1.05	0.97	1.04	58MEC080–16
CNPH*6024A**	0.99	1.06	0.99	1.04	58MEC080–16
CNPH*6124A**	0.99	1.04	0.99	1.04	58MEC080–16
CNPV*4821A**	0.97	1.05	0.97	1.04	58MEC080–16
CSPH*4812A**	0.97	1.05	0.99	1.05	58MEC080–16
CSPH*6012A**	0.99	1.05	1.00	1.05	58MEC080–16
CAP**4821A**	0.97	1.03	0.96	1.01	58MEC100–20
CAP**4823A**	0.97	1.03	0.96	1.01	58MEC100–20
CAP**4824A**	0.97	1.03	0.97	1.01	58MEC100–20
CAP**6021A**	0.99	1.03	0.97	1.00	58MEC100–20
CAP**6024A**	0.99	1.03	0.97	1.00	58MEC100–20
CAP**6025A**	0.99	1.03	0.97	1.00	58MEC100–20
CNPH*4821A**	0.97	1.01	0.97	1.01	58MEC100–20
CNPH*6024A**	0.99	1.03	0.99	1.01	58MEC100–20
CNPH*6124A**	0.99	1.03	0.99	1.01	58MEC100–20
CNPV*4821A**	0.97	1.01	0.97	1.01	58MEC100–20
CNPV*4824A**	0.97	1.01	0.97	1.01	58MEC100–20
CNPV*6024A**	0.99	1.03	0.99	1.01	58MEC100–20
CNPV*6124A**	1.00	1.02	1.00	1.01	58MEC100–20
CSPH*4812A**	0.98	1.02	0.97	1.01	58MEC100–20
CSPH*6012A**	1.00	1.02	0.99	1.00	58MEC100–20
CAP**4823A**	0.97	1.01	0.99	1.05	58MEC120–20
CAP**4824A**	0.97	1.01	1.00	1.06	58MEC120–20
CAP**6024A**	0.99	1.01	1.01	1.06	58MEC120–20
CAP**6025A**	0.99	1.01	1.01	1.06	58MEC120–20
CNPH*4821A**	0.97	1.01	1.00	1.05	58MEC120–20
CNPH*6024A**	0.99	1.01	1.01	1.05	58MEC120–20
CNPH*6124A**	1.00	1.02	1.01	1.05	58MEC120–20
CNPV*4824A**	0.97	1.01	1.00	1.05	58MEC120–20
CNPV*6024A**	0.99	1.01	1.01	1.05	58MEC120–20
CNPV*6124A**	1.01	1.03	1.03	1.05	58MEC120–20
CSPH*4812A**	0.98	1.02	1.00	1.05	58MEC120–20
CSPH*6012A**	1.00	1.02	1.03	1.06	58MEC120–20
CAP**4821A**	0.96	1.04	0.96	1.04	58MV(B,C)080–20
CAP**4823A**	0.96	1.04	0.96	1.04	58MV(B,C)080–20
CAP**4824A**	0.96	1.04	0.96	1.03	58MV(B,C)080–20
CAP**6021A**	0.98	1.04	0.97	1.03	58MV(B,C)080–20
CAP**6024A**	0.98	1.02	0.97	1.03	58MV(B,C)080–20
CAP**6025A**	0.98	1.02	0.97	1.03	58MV(B,C)080–20
CNPH*4821A**	0.96	1.02	0.96	1.03	58MV(B,C)080–20
CNPH*6024A**	0.98	1.02	0.97	1.03	58MV(B,C)080–20
CNPH*6124A**	0.99	1.03	0.97	1.03	58MV(B,C)080–20
CNPV*4821A**	0.96	1.02	0.96	1.03	58MV(B,C)080–20
CNPV*4824A**	0.96	1.02	0.96	1.03	58MV(B,C)080–20
CNPV*6024A**	0.98	1.02	0.97	1.03	58MV(B,C)080–20
CNPV*6124A**	0.99	1.03	0.99	1.02	58MV(B,C)080–20
CSPH*4812A**	0.97	1.03	0.97	1.04	58MV(B,C)080–20
CSPH*6012A**	0.99	1.03	0.99	1.03	58MV(B,C)080–20
CAP**4821A**	0.96	1.04	0.96	1.03	58MV(B,C)100–20
CAP**4823A**	0.96	1.04	0.96	1.03	58MV(B,C)100–20
CAP**4824A**	0.96	1.02	0.96	1.03	58MV(B,C)100–20
CAP**6021A**	0.98	1.02	0.97	1.03	58MV(B,C)100–20
CAP**6024A**	0.98	1.02	0.97	1.03	58MV(B,C)100–20
CAP**6025A**	0.98	1.02	0.97	1.03	58MV(B,C)100–20
CNPH*4821A**	0.97	1.03	0.96	1.02	58MV(B,C)100–20
CNPH*6024A**	0.98	1.02	0.97	1.02	58MV(B,C)100–20
CNPH*6124A**	0.99	1.02	0.97	1.03	58MV(B,C)100–20
CNPV*4821A**	0.97	1.03	0.96	1.02	58MV(B,C)100–20
CNPV*4824A**	0.97	1.03	0.96	1.02	58MV(B,C)100–20
CNPV*6024A**	0.98	1.02	0.97	1.02	58MV(B,C)100–20
CNPV*6124A**	1.00	1.02	0.99	1.02	58MV(B,C)100–20
CSPH*4812A**	0.97	1.03	0.97	1.03	58MV(B,C)100–20
CSPH*6012A**	0.99	1.03	0.99	1.03	58MV(B,C)100–20
CAP**4823A**	0.96	1.02	0.96	1.02	58MV(B,C)120–20
CAP**4824A**	0.97	1.03	0.96	1.02	58MV(B,C)120–20
CAP**6024A**	0.99	1.03	0.97	1.02	58MV(B,C)120–20
CAP**6025A**	0.99	1.03	0.97	1.02	58MV(B,C)120–20
CNPH*4821A**	0.97	1.01	0.96	1.01	58MV(B,C)120–20
CNPH*6024A**	1.00	1.04	0.97	1.01	58MV(B,C)120–20
CNPH*6124A**	0.99	1.00	0.97	1.01	58MV(B,C)120–20
CNPV*4824A**	0.97	1.01	0.96	1.01	58MV(B,C)120–20
CNPV*6024A**	0.99	1.03	0.97	1.01	58MV(B,C)120–20
CNPV*6124A**	1.00	1.00	0.99	1.00	58MV(B,C)120–20
CSPH*4812A**	0.98	1.02	0.97	1.02	58MV(B,C)120–20
CSPH*6012A**	0.99	1.01	0.99	1.02	58MV(B,C)120–20
CAP**4817A**	0.96	1.11	0.99	1.17	58PH*070–16
CAP**4821A**	0.95	1.09	0.96	1.07	58PH*070–16
CAP**6021A**	0.98	1.10	0.97	1.07	58PH*070–16
CNPH*4821A**	0.96	1.11	0.97	1.08	58PH*070–16
CNPH*6024A**	0.98	1.10	0.97	1.07	58PH*070–16
CNPH*6124A**	0.98	1.10	0.99	1.08	58PH*070–16
CNPV*4821A**	0.96	1.11	0.97	1.08	58PH*070–16
CSPH*4812A**	0.96	1.11	0.97	1.08	58PH*070–16
CSPH*6012A**	0.98	1.10	0.99	1.07	58PH*070–16
CAP**4821A**	0.96	1.04	0.97	1.03	58PH*090–16

DETAILED COOLING CAPACITIES# (CONTINUED)

24ANB148A30 Outdoor Section With FE4ANB006 Indoor Section**

Cooling Indoor Model	High Speed Cap.	Power	Low Speed Cap.	Power	Furnace Model
CAP**4823A**	0.96	1.04	0.97	1.03	58PH*090–16
CAP**4824A**	0.97	1.03	0.97	1.03	58PH*090–16
CAP**6021A**	0.99	1.03	0.99	1.03	58PH*090–16
CAP**6024A**	0.99	1.03	0.99	1.03	58PH*090–16
CAP**6025A**	0.99	1.03	0.99	1.03	58PH*090–16
CNPH*4821A**	0.97	1.03	0.97	1.02	58PH*090–16
CNPH*6024A**	0.99	1.03	0.99	1.02	58PH*090–16
CNPH*6124A**	0.99	1.01	0.99	1.02	58PH*090–16
CNPV*4821A**	0.97	1.03	0.97	1.02	58PH*090–16
CNPV*4824A**	0.97	1.03	0.97	1.02	58PH*090–16
CNPV*6024A**	0.99	1.03	0.99	1.02	58PH*090–16
CNPV*6124A**	1.00	1.02	1.00	1.02	58PH*090–16
CSPH*4812A**	0.98	1.04	0.99	1.04	58PH*090–16
CSPH*6012A**	0.99	1.03	1.00	1.03	58PH*090–16
CAP**4821A**	0.96	1.00	0.97	1.03	58PH*110–20
CAP**4823A**	0.96	1.00	0.97	1.03	58PH*110–20
CAP**4824A**	0.97	1.01	0.97	1.02	58PH*110–20
CAP**6021A**	0.99	1.01	0.99	1.02	58PH*110–20
CAP**6024A**	0.99	1.01	0.99	1.02	58PH*110–20
CAP**6025A**	0.99	1.01	0.99	1.02	58PH*110–20
CNPH*4821A**	0.97	1.01	0.99	1.03	58PH*110–20
CNPH*6024A**	0.99	1.01	1.00	1.03	58PH*110–20
CNPH*6124A**	0.99	1.00	1.00	1.03	58PH*110–20
CNPV*4821A**	0.97	1.01	0.99	1.03	58PH*110–20
CNPV*4824A**	0.97	1.01	0.99	1.03	58PH*110–20
CNPV*6024A**	0.99	1.01	1.00	1.03	58PH*110–20
CNPV*6124A**	1.00	0.99	1.01	1.03	58PH*110–20
CSPH*4812A**	0.97	1.01	1.01	1.11	58PH*110–20
CSPH*6012A**	0.99	1.01	1.00	1.02	58PH*110–20
CAP**4823A**	0.96	1.02	0.99	1.07	58PH*135–20
CAP**4824A**	0.97	1.03	0.99	1.07	58PH*135–20
CAP**6024A**	0.99	1.03	1.00	1.06	58PH*135–20
CAP**6025A**	0.99	1.03	1.00	1.06	58PH*135–20
CNPH*4821A**	0.97	1.03	0.99	1.06	58PH*135–20
CNPH*6024A**	0.99	1.03	1.01	1.07	58PH*135–20
CNPH*6124A**	0.99	1.00	1.01	1.07	58PH*135–20
CNPV*4824A**	0.97	1.03	0.99	1.06	58PH*135–20
CNPV*6024A**	0.99	1.03	1.01	1.07	58PH*135–20
CNPV*6124A**	1.00	1.01	1.03	1.07	58PH*135–20
CSPH*4812A**	0.97	1.03	1.00	1.07	58PH*135–20
CSPH*6012A**	1.00	1.04	1.01	1.06	58PH*135–20
CAP**4821A**	0.95	1.04	0.97	1.10	58UVB080–20
CAP**4823A**	0.95	1.05	0.97	1.10	58UVB080–20
CAP**4824A**	0.95	1.02	0.97	1.09	58UVB080–20
CAP**6021A**	0.97	1.03	0.99	1.10	58UVB080–20
CAP**6024A**	0.98	1.04	0.99	1.09	58UVB080–20
CAP**6025A**	0.97	1.03	0.96	1.02	58UVB080–20
CNPV*4821A**	0.96	1.04	0.96	1.03	58UVB080–20
CNPV*4824A**	0.96	1.04	0.99	1.10	58UVB080–20
CNPV*6024A**	0.97	1.03	1.00	1.10	58UVB080–20
CNPV*6124A**	0.99	1.03	1.01	1.09	58UVB080–20
CAP**4821A**	0.96	1.05	0.97	1.08	58UVB100–20
CAP**4823A**	0.96	1.06	0.97	1.08	58UVB100–20
CAP**4824A**	0.96	1.06	0.97	1.07	58UVB100–20
CAP**6021A**	0.98	1.05	0.99	1.08	58UVB100–20
CAP**6024A**	0.98	1.04	0.99	1.07	58UVB100–20
CAP**6025A**	0.98	1.04	0.99	1.07	58UVB100–20
CNPV*4821A**	0.96	1.04	0.97	1.07	58UVB100–20
CNPV*4824A**	0.96	1.04	0.97	1.07	58UVB100–20
CNPV*6024A**	0.98	1.04	0.99	1.06	58UVB100–20
CNPV*6124A**	0.99	1.02	1.00	1.06	58UVB100–20

Cooling Indoor Model	High Speed Cap.	Power	Low Speed Cap.	Power	Furnace Model
CAP**4823A**	0.96	1.04	0.97	1.06	58UVB120–20
CAP**4824A**	0.96	1.02	0.99	1.07	58UVB120–20
CAP**6024A**	0.98	1.02	0.99	1.06	58UVB120–20
CAP**6025A**	0.98	1.02	0.99	1.06	58UVB120–20
CNPV*4824A**	0.96	1.02	0.99	1.06	58UVB120–20
CNPV*6024A**	0.98	1.02	1.00	1.06	58UVB120–20
CNPV*6124A**	0.99	1.00	1.01	1.06	58UVB120–20
CAP**4821A**	0.96	1.02	0.92	0.98	58VLR120–20
CAP**4823A**	0.96	1.02	0.92	0.98	58VLR120–20
CAP**4824A**	0.96	1.00	0.92	0.98	58VLR120–20
CAP**6021A**	0.98	1.02	0.93	0.98	58VLR120–20
CAP**6024A**	0.98	1.02	0.93	0.98	58VLR120–20
CAP**6025A**	0.98	1.02	0.93	0.98	58VLR120–20
CNPH*4821A**	0.96	1.02	0.92	0.98	58VLR120–20
CNPH*6024A**	0.98	1.02	0.93	0.97	58VLR120–20
CNPH*6124A**	0.99	1.03	0.93	0.98	58VLR120–20
CNPV*4821A**	0.96	1.02	0.92	0.98	58VLR120–20
CNPV*4824A**	0.96	1.02	0.92	0.98	58VLR120–20
CNPV*6024A**	0.98	1.02	0.93	0.97	58VLR120–20
CNPV*6124A**	0.99	1.00	0.94	0.96	58VLR120–20
CSPH*4812A**	0.97	1.03	0.93	0.98	58VLR120–20
CSPH*6012A**	0.99	1.03	0.93	0.98	58VLR120–20
CAP**4821A**	0.96	1.04	0.90	0.98	58VMR120–20
CAP**4823A**	0.96	1.04	0.90	0.98	58VMR120–20
CAP**4824A**	0.96	1.04	0.90	0.98	58VMR120–20
CAP**6021A**	0.98	1.02	0.91	0.98	58VMR120–20
CAP**6024A**	0.98	1.04	0.91	0.98	58VMR120–20
CAP**6025A**	0.98	1.04	0.91	0.98	58VMR120–20
CNPH*4821A**	0.96	1.04	0.91	0.98	58VMR120–20
CNPH*6024A**	0.98	1.02	0.91	0.98	58VMR120–20
CNPH*6124A**	0.98	1.04	0.91	0.98	58VMR120–20
CNPV*4821A**	0.96	1.04	0.91	0.98	58VMR120–20
CNPV*4824A**	0.96	1.04	0.91	0.98	58VMR120–20
CNPV*6024A**	0.98	1.02	0.91	0.98	58VMR120–20
CNPV*6124A**	0.99	1.01	0.92	0.97	58VMR120–20
CSPH*4812A**	0.97	1.05	0.91	0.99	58VMR120–20
CSPH*6012A**	0.98	1.02	0.92	0.98	58VMR120–20
CAP**4821A**	0.96	1.04	0.96	1.05	59*N*A100V21**20
CAP**4823A**	0.96	1.04	0.96	1.05	59*N*A100V21**20
CAP**4824A**	0.96	1.02	0.96	1.04	59*N*A100V21**20
CAP**6021A**	0.98	1.02	0.97	1.04	59*N*A100V21**20
CAP**6024A**	0.98	1.02	0.97	1.04	59*N*A100V21**20
CAP**6025A**	0.98	1.02	0.97	1.04	59*N*A100V21**20
CNPH*4821A**	0.97	1.03	0.96	1.04	59*N*A100V21**20
CNPH*6024A**	0.98	1.02	0.97	1.03	59*N*A100V21**20
CNPH*6124A**	0.99	1.03	0.97	1.04	59*N*A100V21**20
CNPV*4821A**	0.97	1.03	0.96	1.04	59*N*A100V21**20
CNPV*4824A**	0.97	1.03	0.96	1.04	59*N*A100V21**20
CNPV*6024A**	0.98	1.02	0.97	1.03	59*N*A100V21**20
CNPV*6124A**	1.00	1.02	0.99	1.03	59*N*A100V21**20
CSPH*4812A**	0.97	1.03	0.97	1.05	59*N*A100V21**20
CSPH*6012A**	0.99	1.03	0.99	1.04	59*N*A100V21**20
CAP**4823A**	0.96	1.02	0.96	1.03	59*N*A120V24**22
CAP**4824A**	0.97	1.01	0.96	1.02	59*N*A120V24**22
CAP**6024A**	0.99	1.03	0.97	1.03	59*N*A120V24**22
CAP**6025A**	0.99	1.03	0.97	1.03	59*N*A120V24**22
CNPH*4821A**	0.97	1.01	0.96	1.02	59*N*A120V24**22
CNPH*6024A**	0.99	1.03	0.97	1.02	59*N*A120V24**22
CNPH*6124A**	0.99	1.00	0.97	1.02	59*N*A120V24**22
CNPV*4824A**	0.97	1.01	0.96	1.02	59*N*A120V24**22
CNPV*6024A**	0.99	1.03	0.97	1.02	59*N*A120V24**22

Cooling Indoor Model	High Speed Cap.	Power	Low Speed Cap.	Power	Furnace Model
CNPV*6124A**	1.00	1.01	0.99	1.01	59*N*A120V24**22
CSPH*4812A**	0.98	1.02	0.97	1.03	59*N*A120V24**22
CSPH*6012A**	0.99	1.01	0.99	1.02	59*N*A120V24**22
CAP**4817A**	0.97	1.05	0.96	1.06	59*P5A080E17**16
CAP**4821A**	0.96	1.05	0.96	1.06	59*P5A080E17**16
CAP**6021A**	0.99	1.06	0.97	1.06	59*P5A080E17**16
CNPH*4821A**	0.97	1.05	0.96	1.05	59*P5A080E17**16
CNPH*6024A**	0.99	1.06	0.97	1.06	59*P5A080E17**16
CNPH*6124A**	0.99	1.06	0.97	1.06	59*P5A080E17**16
CNPV*4821A**	0.97	1.06	0.96	1.05	59*P5A080E17**16
CSPH*4812A**	0.97	1.05	0.97	1.07	59*P5A080E17**16
CSPH*6012A**	0.99	1.05	0.99	1.06	59*P5A080E17**16
CAP**4821A**	0.95	1.05	0.97	1.10	59*P5A100E21**16
CAP**4823A**	0.96	1.06	0.97	1.10	59*P5A100E21**16
CAP**4824A**	0.96	1.06	0.97	1.09	59*P5A100E21**16
CAP**6021A**	0.98	1.06	0.99	1.10	59*P5A100E21**16
CAP**6024A**	0.98	1.06	0.99	1.10	59*P5A100E21**16
CAP**6025A**	0.98	1.06	0.99	1.10	59*P5A100E21**16
CNPH*4821A**	0.96	1.06	0.99	1.11	59*P5A100E21**16
CNPH*6024A**	0.98	1.06	1.00	1.10	59*P5A100E21**16
CNPH*6124A**	0.99	1.07	1.00	1.10	59*P5A100E21**16
CNPV*4821A**	0.96	1.06	0.99	1.11	59*P5A100E21**16
CNPV*4824A**	0.96	1.06	0.99	1.11	59*P5A100E21**16
CNPV*6024A**	0.98	1.06	1.00	1.10	59*P5A100E21**16
CNPV*6124A**	0.99	1.03	1.01	1.10	59*P5A100E21**16
CSPH*4812A**	0.97	1.07	0.99	1.10	59*P5A100E21**16
CSPH*6012A**	0.99	1.05	1.00	1.10	59*P5A100E21**16
CAP**4823A**	0.97	1.02	0.99	1.09	59*P5A120E24**22
CAP**4824A**	0.97	1.01	0.99	1.09	59*P5A120E24**22
CAP**6024A**	0.99	1.02	1.00	1.09	59*P5A120E24**22
CAP**6025A**	0.99	1.02	1.00	1.09	59*P5A120E24**22
CNPH*4821A**	0.97	1.01	1.00	1.10	59*P5A120E24**22
CNPH*6024A**	0.99	1.02	1.01	1.09	59*P5A120E24**22
CNPH*6124A**	1.00	1.02	1.01	1.09	59*P5A120E24**22
CNPV*4824A**	0.97	1.01	1.00	1.10	59*P5A120E24**22
CNPV*6024A**	0.99	1.02	1.01	1.09	59*P5A120E24**22
CNPV*6124A**	1.01	1.03	1.03	1.09	59*P5A120E24**22
CSPH*4812A**	0.98	1.02	1.00	1.10	59*P5A120E24**22
CSPH*6012A**	1.00	1.02	1.01	1.08	59*P5A120E24**22
CAP**4821A**	0.96	1.07	0.97	1.10	OVLAAB048112
CAP**4823A**	0.96	1.07	0.97	1.10	OVLAAB048112
CAP**4824A**	0.96	1.06	0.97	1.09	OVLAAB048112
CAP**6021A**	0.98	1.06	0.99	1.09	OVLAAB048112
CAP**6024A**	0.98	1.06	0.99	1.09	OVLAAB048112
CAP**6025A**	0.98	1.06	0.99	1.09	OVLAAB048112
CNPH*4821A**	0.96	1.06	0.97	1.08	OVLAAB048112
CNPH*6024A**	0.98	1.06	0.99	1.08	OVLAAB048112
CNPH*6124A**	0.99	1.07	1.00	1.10	OVLAAB048112
CNPV*4821A**	0.96	1.06	0.97	1.08	OVLAAB048112
CNPV*4824A**	0.96	1.06	0.97	1.08	OVLAAB048112
CNPV*6024A**	0.98	1.06	0.99	1.08	OVLAAB048112
CNPV*6124A**	0.99	1.05	1.00	1.08	OVLAAB048112
CSPH*4812A**	0.97	1.07	0.99	1.10	OVLAAB048112
CSPH*6012A**	0.99	1.06	1.00	1.09	OVLAAB048112
CAP**4824A**	0.97	1.01	0.99	1.04	OVLAAB060154
CAP**6024A**	0.99	1.01	1.00	1.04	OVLAAB060154
CAP**6025A**	0.99	1.01	1.00	1.04	OVLAAB060154
CNPH*4821A**	0.97	1.01	0.99	1.04	OVLAAB060154
CNPH*6024A**	0.99	1.01	1.00	1.03	OVLAAB060154
CNPH*6124A**	1.00	1.02	1.00	1.04	OVLAAB060154
CNPV*4824A**	0.97	1.01	0.99	1.04	OVLAAB060154

DETAILED COOLING CAPACITIES# (CONTINUED)

24ANB148A30 Outdoor Section With FE4ANB006 Indoor Section**

Cooling Indoor Model	High Speed Cap.	Power	Low Speed Cap.	Power	Furnace Model
CNPV*6024A**	0.99	1.01	1.00	1.03	OVLAAB060154
CNPV*6124A**	1.00	1.01	1.01	1.03	OVLAAB060154
CSPH*4812A**	0.98	1.02	1.00	1.05	OVLAAB060154
CSPH*6012A**	1.00	1.02	1.00	1.03	OVLAAB060154

See notes on page 48

DETAILED COOLING CAPACITIES# (CONTINUED)

EVAPORATOR AIR		CONDENSER ENTERING AIR TEMPERATURES °F (°C)																	
		75 (23.9)			85 (29.4)			95 (35)			105 (40.6)			115 (46.1)			125 (51.7)		
CFM	EWB °F (°C)	Capacity MBtuh		Total Sys. KW**	Capacity MBtuh		Total Sys. KW**	Capacity MBtuh		Total Sys. KW**	Capacity MBtuh		Total Sys. KW**	Capacity MBtuh		Total Sys. KW**	Capacity MBtuh		Total Sys. KW**
		Total	Sens‡		Total	Sens‡		Total	Sens‡		Total	Sens‡		Total	Sens‡		Total	Sens‡	
24ANB160A30 Outdoor Section With FE4ANB006 Indoor Section High**																			
1500	57 (13.9)	53.62	53.62	3.64	52.22	52.22	4.04	50.56	50.56	4.46	48.76	48.76	4.93	46.60	46.60	5.45	44.09	44.09	6.02
	62 (16.7)	56.62	49.54	3.67	54.64	48.79	4.07	52.42	47.94	4.49	49.94	46.96	4.95	47.14	45.78	5.46	44.17	44.17	6.02
	63 (17.2)††	57.81	40.70	3.69	55.76	39.88	4.08	53.49	38.98	4.50	50.73	37.87	4.96	48.02	36.80	5.47	44.70	35.49	6.03
	67 (19.4)	62.40	42.25	3.74	60.17	41.43	4.13	57.68	40.52	4.56	54.86	39.48	5.02	51.70	38.33	5.53	48.12	37.03	6.09
	72 (22.2)	68.73	34.78	3.82	66.25	33.88	4.21	63.48	32.89	4.64	60.34	31.78	5.10	56.84	30.55	5.61	52.89	29.18	6.18
1625	57 (13.9)	55.12	55.12	3.69	53.63	53.63	4.09	51.93	51.93	4.52	49.98	49.98	4.99	47.68	47.68	5.50	45.08	45.08	6.08
	62 (16.7)	57.51	51.70	3.72	55.44	50.93	4.11	53.18	50.06	4.53	50.46	48.92	4.99	47.86	47.66	5.51	45.13	45.13	6.08
	63 (17.2)††	58.67	42.19	3.73	56.55	41.37	4.12	54.18	40.45	4.55	51.51	39.41	5.01	48.52	38.25	5.51	45.13	36.93	6.07
	67 (19.4)	63.30	43.83	3.79	60.99	43.01	4.18	58.40	42.09	4.60	55.49	41.05	5.07	52.23	39.89	5.57	48.56	38.58	6.14
	72 (22.2)	69.69	35.77	3.86	67.12	34.87	4.26	64.23	33.86	4.68	61.01	32.74	5.15	57.40	31.50	5.66	53.35	30.13	6.22
1750	57 (13.9)	56.47	56.47	3.74	54.90	54.90	4.14	53.12	53.12	4.57	51.06	51.06	5.04	48.69	48.69	5.55	45.94	45.94	6.13
	62 (16.7)	58.28	53.77	3.76	56.17	52.98	4.16	53.85	52.06	4.58	51.30	50.86	5.04	48.75	48.75	5.56	45.99	45.99	6.13
	63 (17.2)††	59.42	43.64	3.77	57.21	42.80	4.17	54.77	41.88	4.59	52.03	40.84	5.05	48.95	39.66	5.56	45.48	38.32	6.11
	67 (19.4)	64.07	45.38	3.83	61.68	44.55	4.22	59.00	43.63	4.65	56.02	42.59	5.11	52.65	41.41	5.62	48.90	40.09	6.18
	72 (22.2)	70.52	36.73	3.91	67.84	35.81	4.30	64.88	34.80	4.73	61.56	33.67	5.19	57.79	32.39	5.70	53.72	31.05	6.26
2000	57 (13.9)	58.82	58.82	3.84	57.09	57.09	4.24	55.16	55.16	4.67	52.92	52.92	5.13	50.34	50.34	5.65	47.39	47.39	6.22
	62 (16.7)	59.62	57.64	3.85	57.46	56.69	4.24	55.23	55.23	4.67	52.99	52.99	5.14	50.20	50.20	5.65	47.45	47.45	6.22
	63 (17.2)††	60.59	46.39	3.86	58.27	45.56	4.25	55.70	44.62	4.67	52.81	43.56	5.13	49.48	42.30	5.63	46.03	40.98	6.19
	67 (19.4)	65.29	48.35	3.92	62.77	47.52	4.31	59.96	46.59	4.73	56.82	45.53	5.19	53.33	44.34	5.70	49.45	42.98	6.26
	72 (22.2)	71.82	38.55	3.99	69.03	37.63	4.39	65.88	36.60	4.81	62.41	35.46	5.27	58.54	34.19	5.78	54.26	32.81	6.34

EVAPORATOR AIR		CONDENSER ENTERING AIR TEMPERATURES °F (°C)																	
		75 (23.9)			85 (29.4)			95 (35)			105 (40.6)			115 (46.1)			125 (51.7)		
CFM	EWB °F (°C)	Capacity MBtuh		Total Sys. KW**	Capacity MBtuh		Total Sys. KW**	Capacity MBtuh		Total Sys. KW**	Capacity MBtuh		Total Sys. KW**	Capacity MBtuh		Total Sys. KW**	Capacity MBtuh		Total Sys. KW**
		Total	Sens‡		Total	Sens‡		Total	Sens‡		Total	Sens‡		Total	Sens‡		Total	Sens‡	
24ANB160A30 Outdoor Section With FE4ANB006 Indoor Section Low**																			
1500	57 (13.9)	45.33	45.33	2.38	43.58	43.58	2.68	41.66	41.66	3.02	39.56	39.56	3.40	37.28	37.28	3.85	34.79	34.79	4.36
	62 (16.7)	45.41	45.41	2.38	43.65	43.65	2.68	41.72	41.72	3.02	39.62	39.62	3.40	37.33	37.33	3.84	34.84	34.84	4.36
	63 (17.2)††	46.00	36.51	2.37	43.78	35.54	2.68	41.40	34.50	3.02	38.83	33.39	3.41	36.09	32.21	3.86	33.19	30.94	4.39
	67 (19.4)	49.80	38.19	2.36	47.38	37.21	2.67	44.79	36.17	3.00	42.01	35.06	3.38	39.03	33.87	3.82	35.87	32.59	4.34
	72 (22.2)	55.12	30.40	2.36	52.45	29.42	2.65	49.57	28.38	2.97	46.32	27.22	3.34	43.18	26.11	3.78	39.63	24.87	4.28
1625	57 (13.9)	46.43	46.43	2.39	44.60	44.60	2.70	42.60	42.60	3.03	40.42	40.42	3.42	38.05	38.05	3.86	35.46	35.46	4.36
	62 (16.7)	46.50	46.50	2.39	44.66	44.66	2.70	42.66	42.66	3.03	40.47	40.47	3.42	38.09	38.09	3.85	35.50	35.50	4.36
	63 (17.2)††	46.51	38.02	2.39	44.25	37.04	2.70	41.80	35.97	3.04	39.18	34.84	3.43	36.40	33.62	3.88	33.47	32.28	4.40
	67 (19.4)	50.33	39.82	2.38	47.86	38.83	2.68	45.20	37.76	3.02	42.37	36.62	3.40	39.35	35.40	3.84	36.15	34.08	4.35
	72 (22.2)	55.69	31.41	2.38	52.95	30.42	2.67	50.00	29.37	2.99	46.55	28.15	3.36	43.48	27.08	3.80	39.88	25.83	4.30
1750	57 (13.9)	47.42	47.42	2.41	45.52	45.52	2.71	43.44	43.44	3.05	41.18	41.18	3.43	38.72	38.72	3.87	36.05	36.05	4.37
	62 (16.7)	47.49	47.49	2.41	45.58	45.58	2.71	43.50	43.50	3.05	41.23	41.23	3.43	38.77	38.77	3.87	36.21	36.21	4.38
	63 (17.2)††	46.95	39.49	2.41	44.63	38.48	2.72	42.15	37.40	3.06	39.50	36.23	3.45	36.68	34.95	3.90	33.74	33.46	4.42
	67 (19.4)	50.78	41.41	2.40	48.26	40.39	2.70	45.45	39.26	3.03	42.68	38.14	3.42	39.62	36.88	3.86	36.40	35.45	4.37
	72 (22.2)	56.17	32.40	2.40	53.37	31.40	2.69	50.36	30.33	3.01	46.74	29.06	3.38	43.73	28.02	3.81	40.04	26.75	4.32
2000	57 (13.9)	49.13	49.13	2.45	46.89	46.89	2.75	44.88	44.88	3.08	42.47	42.47	3.46	39.86	39.86	3.89	37.03	37.03	4.40
	62 (16.7)	49.19	49.19	2.45	46.94	46.94	2.75	44.93	44.93	3.08	42.51	42.51	3.46	39.90	39.90	3.89	37.09	37.09	4.40
	63 (17.2)††	47.67	42.29	2.45	45.28	41.23	2.76	42.74	40.08	3.10	40.04	38.79	3.48	37.23	37.23	3.93	34.54	34.54	4.44
	67 (19.4)	51.51	44.45	2.45	48.92	43.38	2.74	45.87	42.11	3.07	43.21	40.98	3.45	40.13	39.51	3.89	37.11	37.11	4.40
	72 (22.2)	56.91	34.30	2.44	54.01	33.28	2.73	50.92	32.20	3.05	47.60	31.05	3.42	44.08	29.85	3.85	40.31	28.56	4.35

See notes on page 48

DETAILED COOLING CAPACITIES# (CONTINUED)

24ANB160A**30 Outdoor Section With FE4ANB006 Indoor Section – HI

Cooling Indoor Model	High Speed Cap.	Power	Low Speed Cap.	Power	Furnace Model
*FE4ANB006	1.00	1.00	1.00	1.00	
CAP**6021A**	0.97	1.04	0.97	1.13	
CAP**6024A**	0.97	1.04	0.97	1.13	
CAP**6025A**	0.97	1.08	0.97	1.13	
CNPH*6024A**	0.97	1.04	0.98	1.14	
CNPH*6124A**	0.98	1.05	0.98	1.13	
CNPV*6024A**	0.97	1.04	0.98	1.14	
CNPV*6124A**	0.99	1.05	0.99	1.13	
CSPH*6012A**	0.98	1.05	0.98	1.13	
FV4CNB006	1.00	1.00	1.00	1.00	
CAP**6021A**	0.97	1.02	0.98	1.02	58CV(A,X)110–20
CAP**6024A**	0.97	1.05	0.98	1.02	58CV(A,X)110–20
CAP**6025A**	0.97	1.05	0.98	1.02	58CV(A,X)110–20
CNPH*6024A**	0.97	1.01	0.98	1.01	58CV(A,X)110–20
CNPH*6124A**	0.97	1.01	0.98	1.02	58CV(A,X)110–20
CNPV*6024A**	0.97	1.01	0.98	1.01	58CV(A,X)110–20
CNPV*6124A**	0.98	1.01	0.99	1.01	58CV(A,X)110–20
CSPH*6012A**	0.97	1.01	0.99	1.01	58CV(A,X)110–20
CAP**6024A**	0.97	1.00	0.98	1.00	58CV(A,X)135–22
CAP**6025A**	0.97	1.02	0.98	1.00	58CV(A,X)135–22
CNPH*6024A**	0.97	1.00	0.98	0.99	58CV(A,X)135–22
CNPH*6124A**	0.98	1.01	0.98	1.00	58CV(A,X)135–22
CNPV*6024A**	0.97	1.00	0.98	0.99	58CV(A,X)135–22
CNPV*6124A**	0.99	1.00	0.99	0.99	58CV(A,X)135–22
CSPH*6012A**	0.98	1.00	0.99	1.00	58CV(A,X)135–22
CAP**6024A**	0.97	0.99	0.98	0.99	58CV(A,X)155–22
CAP**6025A**	0.97	1.01	0.98	0.99	58CV(A,X)155–22
CNPH*6024A**	0.97	0.98	0.98	0.99	58CV(A,X)155–22
CNPH*6124A**	0.98	0.99	0.99	1.00	58CV(A,X)155–22
CNPV*6024A**	0.97	0.98	0.98	0.99	58CV(A,X)155–22
CNPV*6124A**	0.99	0.99	0.99	0.98	58CV(A,X)155–22
CSPH*6012A**	0.98	0.98	0.99	0.99	58CV(A,X)155–22
CAP**6021A**	0.97	1.11	0.99	1.09	58HDV080––20
CAP**6024A**	0.97	1.11	0.99	1.08	58HDV080––20
CAP**6025A**	0.97	1.08	0.99	1.08	58HDV080––20
CNPH*6024A**	0.97	1.11	0.99	1.08	58HDV080––20
CNPH*6124A**	0.98	1.10	0.99	1.08	58HDV080––20
CNPV*6024A**	0.97	1.11	0.99	1.08	58HDV080––20
CNPV*6124A**	0.99	1.11	1.00	1.08	58HDV080––20
CSPH*6012A**	0.98	1.10	1.00	1.09	58HDV080––20
CAP**6024A**	0.97	1.06	0.99	1.07	58HDV100––20
CAP**6025A**	0.97	1.08	0.99	1.07	58HDV100––20
CNPH*6024A**	0.97	1.09	0.99	1.07	58HDV100––20
CNPH*6124A**	0.98	1.06	0.99	1.06	58HDV100––20
CNPV*6024A**	0.97	1.09	0.99	1.07	58HDV100––20
CNPV*6124A**	0.99	1.08	1.00	1.06	58HDV100––20
CSPH*6012A**	0.98	1.10	0.99	1.06	58HDV100––20
CAP**6021A**	0.97	1.05	0.98	1.10	58MEC080–16
CNPH*6024A**	0.97	1.05	0.99	1.10	58MEC080–16
CNPH*6124A**	0.97	1.05	0.99	1.10	58MEC080–16
CSPH*6012A**	0.97	1.05	0.99	1.10	58MEC080–16
CAP**6021A**	0.97	1.05	0.99	1.06	58MEC100–20
CAP**6024A**	0.97	1.05	0.99	1.05	58MEC100–20
CAP**6025A**	0.97	1.05	0.99	1.05	58MEC100–20
CNPH*6024A**	0.97	1.05	0.99	1.05	58MEC100–20
CNPH*6124A**	0.97	1.05	0.99	1.05	58MEC100–20
CNPV*6024A**	0.97	1.05	0.99	1.05	58MEC100–20
CNPV*6124A**	0.99	1.04	1.00	1.05	58MEC100–20
CSPH*6012A**	0.98	1.03	1.00	1.05	58MEC100–20
CAP**6024A**	0.97	1.02	0.99	1.04	58MEC120–20
CAP**6025A**	0.97	1.02	0.99	1.04	58MEC120–20

Cooling Indoor Model	High Speed Cap.	Power	Low Speed Cap.	Power	Furnace Model
CNPH*6024A**	0.97	1.02	0.99	1.04	58MEC120–20
CNPH*6124A**	0.98	1.03	1.00	1.05	58MEC120–20
CNPV*6024A**	0.97	1.02	0.99	1.04	58MEC120–20
CNPV*6124A**	0.99	1.04	1.01	1.04	58MEC120–20
CSPH*6012A**	0.98	1.03	1.00	1.04	58MEC120–20
CAP**6021A**	0.97	1.05	0.97	1.05	58MV(B,C)080–20
CAP**6024A**	0.97	1.08	0.97	1.04	58MV(B,C)080–20
CAP**6025A**	0.97	1.08	0.97	1.04	58MV(B,C)080–20
CNPH*6024A**	0.97	1.05	0.97	1.04	58MV(B,C)080–20
CNPH*6124A**	0.97	1.05	0.98	1.05	58MV(B,C)080–20
CNPV*6024A**	0.97	1.05	0.97	1.04	58MV(B,C)080–20
CNPV*6124A**	0.97	1.06	0.99	1.04	58MV(B,C)080–20
CSPH*6012A**	0.97	1.05	0.98	1.04	58MV(B,C)080–20
CAP**6021A**	0.97	1.04	0.97	1.04	58MV(B,C)100–20
CAP**6024A**	0.97	1.05	0.97	1.04	58MV(B,C)100–20
CAP**6025A**	0.97	1.05	0.97	1.04	58MV(B,C)100–20
CNPH*6024A**	0.97	1.04	0.98	1.04	58MV(B,C)100–20
CNPH*6124A**	0.97	1.05	0.98	1.05	58MV(B,C)100–20
CNPV*6024A**	0.97	1.04	0.98	1.04	58MV(B,C)100–20
CNPV*6124A**	0.98	1.04	0.99	1.04	58MV(B,C)100–20
CSPH*6012A**	0.97	1.04	0.98	1.04	58MV(B,C)100–20
CAP**6024A**	0.97	1.02	0.98	1.03	58MV(B,C)120–20
CAP**6025A**	0.97	1.04	0.98	1.03	58MV(B,C)120–20
CNPH*6024A**	0.97	1.01	0.98	1.03	58MV(B,C)120–20
CNPH*6124A**	0.97	1.02	0.98	1.03	58MV(B,C)120–20
CNPV*6024A**	0.97	1.01	0.98	1.03	58MV(B,C)120–20
CNPV*6124A**	0.98	1.02	0.99	1.02	58MV(B,C)120–20
CSPH*6012A**	0.97	1.02	0.98	1.02	58MV(B,C)120–20
CAP**6021A**	0.97	1.01	0.99	1.04	58PH*110–20
CAP**6024A**	0.98	1.03	0.99	1.04	58PH*110–20
CAP**6025A**	0.98	1.03	0.99	1.04	58PH*110–20
CNPH*6024A**	0.97	1.01	0.99	1.03	58PH*110–20
CNPH*6124A**	0.98	1.01	0.99	1.03	58PH*110–20
CNPV*6024A**	0.97	1.01	0.99	1.03	58PH*110–20
CNPV*6124A**	0.99	1.01	1.01	1.04	58PH*110–20
CSPH*6012A**	0.98	1.01	1.00	1.03	58PH*110–20
CAP**6024A**	0.97	1.01	0.99	1.06	58PH*135–20
CAP**6025A**	0.97	1.05	0.99	1.06	58PH*135–20
CNPH*6024A**	0.97	1.01	0.99	1.05	58PH*135–20
CNPH*6124A**	0.99	1.10	1.00	1.06	58PH*135–20
CNPV*6024A**	0.97	1.01	0.99	1.05	58PH*135–20
CNPV*6124A**	0.99	1.02	1.01	1.06	58PH*135–20
CSPH*6012A**	0.98	1.01	1.00	1.05	58PH*135–20
CAP**6021A**	0.97	1.08	0.97	1.05	58UVB080–20
CAP**6024A**	0.97	1.10	0.97	1.05	58UVB080–20
CAP**6025A**	0.97	1.10	0.97	1.05	58UVB080–20
CNPV*6024A**	0.97	1.10	0.97	1.04	58UVB080–20
CNPV*6124A**	0.98	1.10	0.99	1.05	58UVB080–20
CAP**6021A**	0.97	1.06	0.98	1.09	58UVB100–20
CAP**6024A**	0.97	1.08	0.98	1.08	58UVB100–20
CAP**6025A**	0.97	1.08	0.98	1.08	58UVB100–20
CNPV*6024A**	0.97	1.05	0.98	1.08	58UVB100–20
CNPV*6124A**	0.98	1.06	0.99	1.07	58UVB100–20
CAP**6024A**	0.97	1.05	0.98	1.05	58UVB120–20
CAP**6025A**	0.97	1.06	0.98	1.05	58UVB120–20
CNPV*6024A**	0.97	1.03	0.98	1.05	58UVB120–20
CNPV*6124A**	0.98	1.03	0.99	1.04	58UVB120–20
CAP**6021A**	0.97	1.05	0.91	0.94	58VLR120–20
CAP**6024A**	0.97	1.04	0.91	0.94	58VLR120–20
CAP**6025A**	0.97	1.06	0.91	0.94	58VLR120–20
CNPH*6024A**	0.97	1.06	0.91	0.93	58VLR120–20

Cooling Indoor Model	High Speed Cap.	Power	Low Speed Cap.	Power	Furnace Model
CNPH*6124A**	0.98	1.07	0.92	0.95	58VLR120–20
CNPV*6024A**	0.97	1.04	0.91	0.93	58VLR120–20
CNPV*6124A**	0.99	1.04	0.92	0.93	58VLR120–20
CSPH*6012A**	0.98	1.06	0.92	0.94	58VLR120–20
CAP**6021A**	0.97	1.06	0.91	0.94	58VMR120–20
CAP**6024A**	0.97	1.06	0.91	0.94	58VMR120–20
CAP**6025A**	0.97	1.08	0.91	0.94	58VMR120–20
CNPH*6024A**	0.97	1.08	0.91	0.93	58VMR120–20
CNPH*6124A**	0.97	1.09	0.91	0.94	58VMR120–20
CNPV*6024A**	0.97	1.05	0.91	0.93	58VMR120–20
CNPV*6124A**	0.98	1.06	0.92	0.92	58VMR120–20
CSPH*6012A**	0.97	1.06	0.92	0.95	58VMR120–20
CAP**6021A**	0.97	1.05	0.97	1.05	59*N*A100V21**20
CAP**6024A**	0.97	1.05	0.97	1.05	59*N*A100V21**20
CAP**6025A**	0.97	1.05	0.97	1.05	59*N*A100V21**20
CNPH*6024A**	0.97	1.05	0.97	1.05	59*N*A100V21**20
CNPH*6124A**	0.97	1.06	0.98	1.06	59*N*A100V21**20
CNPV*6024A**	0.97	1.04	0.97	1.05	59*N*A100V21**20
CNPV*6124A**	0.98	1.05	0.99	1.05	59*N*A100V21**20
CSPH*6012A**	0.97	1.05	0.98	1.05	59*N*A100V21**20
CAP**6024A**	0.97	1.02	0.98	1.03	59*N*A120V24**22
CAP**6025A**	0.97	1.04	0.98	1.03	59*N*A120V24**22
CNPH*6024A**	0.97	1.01	0.98	1.03	59*N*A120V24**22
CNPH*6124A**	0.97	1.02	0.98	1.03	59*N*A120V24**22
CNPV*6024A**	0.97	1.01	0.98	1.03	59*N*A120V24**22
CNPV*6124A**	0.98	1.02	0.99	1.02	59*N*A120V24**22
CSPH*6012A**	0.97	1.02	0.98	1.02	59*N*A120V24**22
CAP**6024A**	0.97	1.02	0.98	1.03	59*P5A120E24**22
CAP**6025A**	0.97	1.02	0.98	1.03	59*P5A120E24**22
CNPH*6024A**	0.97	1.02	0.98	1.03	59*P5A120E24**22
CNPH*6124A**	0.98	1.03	0.98	1.03	59*P5A120E24**22
CNPV*6024A**	0.97	1.02	0.98	1.03	59*P5A120E24**22
CNPV*6124A**	0.99	1.04	0.99	1.02	59*P5A120E24**22
CSPH*6012A**	0.98	1.03	0.99	1.03	59*P5A120E24**22
CAP**6024A**	0.97	1.05	0.98	1.02	OVLAAB060154
CAP**6025A**	0.97	1.05	0.98	1.02	OVLAAB060154
CNPH*6024A**	0.97	1.05	0.98	1.01	OVLAAB060154
CNPH*6124A**	0.98	1.06	0.99	1.03	OVLAAB060154
CNPV*6024A**	0.97	1.05	0.98	1.01	OVLAAB060154
CNPV*6124A**	0.99	1.04	0.99	1.01	OVLAAB060154
CSPH*6012A**	0.98	1.03	0.99	1.02	OVLAAB060154

† Total and sensible capacities are net capacities. Blower motor heat has been subtracted.

‡ Sensible capacities shown are based on 80°F (27°C) entering air at the indoor coil. For sensible capacities at other than 80°F (27°C), deduct 835 Btuh
(245 kW) per 1000 CFM (480 L/S) of indoor coil air for each degree below 80°F (27°C), or add 835 Btuh (245 kW) per 1000 CFM (480 L/S) of indoor coil air per degree above 80°F (27°C).

Detailed cooling capacities are based on indoor and outdoor unit at the same elevation per AHRI standard 210/240–2008. If additional tubing length and/or indoor unit is located above outdoor unit, a slight variation in capacity may occur.

** System kw is total of indoor and outdoor unit kilowatts.

EWB — Entering Wet Bulb

NOTE: When the required data fall between the published data, interpolation may be performed. Extrapolation is not an acceptable practice.

CONDENSER ONLY RATINGS*

SST °F (°C)		CONDENSER ENTERING AIR TEMPERATURES °F (°C)							
		55 (12.78)	65 (18.33)	75 (23.89)	85 (29.44)	95 (35.0)	105 (40.56)	115 (46.11)	125 (51.67)
24ANB124A30 – HI**									
30 (–1.11)	TCG	20.70	20.10	19.40	18.60	17.70	16.80	15.60	14.40
	SDT	63.50	73.30	83.00	92.70	102.40	112.10	121.80	131.50
	KW	1.03	1.20	1.36	1.52	1.69	1.88	2.08	2.31
35 (1.67)	TCG	22.90	22.20	21.50	20.60	19.60	18.60	17.40	16.00
	SDT	64.40	74.10	83.80	93.50	103.20	112.80	122.40	132.10
	KW	1.05	1.21	1.37	1.53	1.71	1.89	2.10	2.33
40 (4.44)	TCG	25.30	24.50	23.70	22.70	21.70	20.50	19.20	17.80
	SDT	65.30	75.00	84.60	94.30	103.90	113.50	123.10	132.70
	KW	1.07	1.23	1.39	1.55	1.73	1.91	2.12	2.35
45 (7.22)	TCG	27.80	27.00	26.10	25.00	23.90	22.70	21.30	19.70
	SDT	66.20	75.90	85.50	95.10	104.70	114.30	123.80	133.40
	KW	1.09	1.25	1.41	1.57	1.74	1.93	2.14	2.38
50 (10.0)	TCG	30.50	29.60	28.60	27.50	26.30	24.90	23.40	21.80
	SDT	67.30	76.80	86.40	96.00	105.50	115.10	124.60	134.10
	KW	1.11	1.27	1.43	1.59	1.77	1.96	2.17	2.40
55 (12.78)	TCG	33.50	32.50	31.40	30.20	28.80	27.40	25.80	24.00
	SDT	68.40	77.90	87.40	96.90	106.40	115.90	125.40	134.80
	KW	1.14	1.30	1.45	1.61	1.79	1.98	2.19	2.43
60 (15.56)	TCG	36.60	35.50	34.30	33.00	31.60	30.00	28.30	26.40
	SDT	69.50	79.00	88.50	97.90	107.40	116.80	126.20	135.60
	KW	1.17	1.32	1.48	1.64	1.81	2.01	2.22	2.45
24ANB124A30 Low**									
30 (–1.11)	TCG	13.40	13.10	12.80	12.30	11.70	11.00	10.20	9.20
	SDT	61.90	71.70	81.50	91.20	101.00	110.70	120.40	130.10
	KW	0.58	0.71	0.84	0.99	1.14	1.31	1.52	1.75
35 (1.67)	TCG	15.20	14.90	14.50	13.90	13.30	12.60	11.70	10.70
	SDT	62.80	72.60	82.30	92.00	101.70	111.40	121.00	130.70
	KW	0.59	0.72	0.86	1.00	1.15	1.33	1.53	1.77
40 (4.44)	TCG	17.10	16.70	16.30	15.80	15.10	14.30	13.30	12.20
	SDT	63.70	73.50	83.20	92.90	102.50	112.20	121.80	131.40
	KW	0.61	0.74	0.87	1.01	1.16	1.34	1.54	1.78
45 (7.22)	TCG	19.10	18.80	18.30	17.70	17.00	16.10	15.10	13.90
	SDT	64.70	74.40	84.10	93.80	103.40	113.00	122.60	132.10
	KW	0.62	0.75	0.88	1.02	1.18	1.35	1.56	1.79
50 (10.0)	TCG	21.40	21.00	20.50	19.90	19.10	18.10	17.10	15.80
	SDT	65.80	75.50	85.10	94.70	104.30	113.80	123.40	132.90
	KW	0.65	0.77	0.90	1.04	1.19	1.37	1.57	1.80
55 (12.78)	TCG	23.80	23.40	22.80	22.20	21.30	20.30	19.20	17.80
	SDT	66.90	76.60	86.10	95.70	105.20	114.80	124.20	133.70
	KW	0.67	0.79	0.92	1.05	1.20	1.38	1.58	1.82
60 (15.56)	TCG	26.30	25.90	25.40	24.60	23.70	22.70	21.40	20.00
	SDT	68.10	77.70	87.30	96.80	106.30	115.70	125.20	134.60
	KW	0.70	0.81	0.94	1.07	1.22	1.39	1.60	1.83
24ANB136A30 High**									
30 (–1.11)	TCG	18.80	18.20	17.60	16.80	15.90	14.80	13.70	12.40
	SDT	64.30	73.90	83.50	93.00	102.60	112.10	121.60	131.20
	KW	0.88	1.05	1.22	1.41	1.61	1.85	2.12	2.44
35 (1.67)	TCG	21.20	20.60	19.90	19.00	18.00	16.90	15.70	14.30
	SDT	65.40	74.90	84.50	94.00	103.50	113.00	122.40	131.90
	KW	0.87	1.04	1.21	1.39	1.59	1.82	2.09	2.41
40 (4.44)	TCG	23.90	23.10	22.30	21.40	20.30	19.10	17.80	16.30
	SDT	66.60	76.10	85.50	95.00	104.40	113.90	123.30	132.70
	KW	0.87	1.03	1.20	1.37	1.57	1.80	2.06	2.37
45 (7.22)	TCG	26.70	25.90	25.00	24.00	22.90	21.60	20.20	18.60
	SDT	67.90	77.30	86.70	96.10	105.40	114.80	124.20	133.50
	KW	0.87	1.03	1.19	1.36	1.55	1.78	2.03	2.34
50 (10.0)	TCG	29.70	28.90	27.90	26.80	25.60	24.20	22.70	21.00
	SDT	69.20	78.60	87.90	97.20	106.50	115.80	125.10	134.40
	KW	0.87	1.02	1.18	1.35	1.54	1.75	2.01	2.30
55 (12.78)	TCG	33.00	32.10	31.00	29.80	28.50	27.10	25.40	23.60
	SDT	70.70	79.90	89.20	98.40	107.60	116.90	126.10	135.30
	KW	0.87	1.02	1.17	1.34	1.52	1.73	1.98	2.27
60 (15.56)	TCG	36.50	35.50	34.30	33.10	31.70	30.10	28.40	26.50
	SDT	72.20	81.40	90.50	99.70	108.80	118.00	127.10	136.20
	KW	0.88	1.02	1.17	1.33	1.51	1.71	1.95	2.24

See notes on page 51

CONDENSER ONLY RATINGS* CONTINUED

SST °F (°C)		CONDENSER ENTERING AIR TEMPERATURES °F (°C)							
		55 (12.78)	65 (18.33)	75 (23.89)	85 (29.44)	95 (35.0)	105 (40.56)	115 (46.11)	125 (51.67)
24ANB136A30 Low**									
30 (−1.11)	TCG	18.80	18.20	17.60	16.80	15.90	14.80	13.70	12.40
	SDT	64.30	73.90	83.50	93.00	102.60	112.10	121.60	131.20
	KW	0.88	1.05	1.22	1.41	1.61	1.85	2.12	2.44
35 (1.67)	TCG	21.20	20.60	19.90	19.00	18.00	16.90	15.70	14.30
	SDT	65.40	74.90	84.50	94.00	103.50	113.00	122.40	131.90
	KW	0.87	1.04	1.21	1.39	1.59	1.82	2.09	2.41
40 (4.44)	TCG	23.90	23.10	22.30	21.40	20.30	19.10	17.80	16.30
	SDT	66.60	76.10	85.50	95.00	104.40	113.90	123.30	132.70
	KW	0.87	1.03	1.20	1.37	1.57	1.80	2.06	2.37
45 (7.22)	TCG	26.70	25.90	25.00	24.00	22.90	21.60	20.20	18.60
	SDT	67.90	77.30	86.70	96.10	105.40	114.80	124.20	133.50
	KW	0.87	1.03	1.19	1.36	1.55	1.78	2.03	2.34
50 (10.0)	TCG	29.70	28.90	27.90	26.80	25.60	24.20	22.70	21.00
	SDT	69.20	78.60	87.90	97.20	106.50	115.80	125.10	134.40
	KW	0.87	1.02	1.18	1.35	1.54	1.75	2.01	2.30
55 (12.78)	TCG	33.00	32.10	31.00	29.80	28.50	27.10	25.40	23.60
	SDT	70.70	79.90	89.20	98.40	107.60	116.90	126.10	135.30
	KW	0.87	1.02	1.17	1.34	1.52	1.73	1.98	2.27
60 (15.56)	TCG	36.50	35.50	34.30	33.10	31.70	30.10	28.40	26.50
	SDT	72.20	81.40	90.50	99.70	108.80	118.00	127.10	136.20
	KW	0.88	1.02	1.17	1.33	1.51	1.71	1.95	2.24
24ANB148A30 High**									
30 (−1.11)	TCG	37.80	36.90	35.80	34.60	33.00	31.30	29.20	26.90
	SDT	68.90	78.30	87.90	97.30	106.80	116.10	125.50	134.80
	KW	1.86	2.14	2.45	2.77	3.13	3.52	3.97	4.48
35 (1.67)	TCG	42.00	41.00	39.90	38.50	36.90	35.00	32.80	30.30
	SDT	70.30	79.70	89.20	98.60	107.90	117.20	126.50	135.70
	KW	1.89	2.18	2.48	2.81	3.17	3.57	4.02	4.53
40 (4.44)	TCG	46.50	45.50	44.20	42.70	41.00	39.00	36.60	34.00
	SDT	71.80	81.20	90.50	99.90	109.20	118.40	127.50	136.70
	KW	1.94	2.22	2.52	2.85	3.22	3.62	4.07	4.59
45 (7.22)	TCG	51.40	50.30	48.90	47.30	45.40	43.30	40.80	38.00
	SDT	73.50	82.70	92.00	101.20	110.40	119.60	128.70	137.70
	KW	1.98	2.27	2.57	2.90	3.26	3.67	4.13	4.65
50 (10.0)	TCG	56.70	55.40	53.90	52.20	50.20	47.90	45.20	42.20
	SDT	75.20	84.30	93.50	102.60	111.80	120.80	129.90	138.80
	KW	2.03	2.32	2.62	2.95	3.32	3.73	4.19	4.71
55 (12.78)	TCG	62.30	60.90	59.40	57.50	55.30	52.90	50.10	46.80
	SDT	76.90	86.00	95.10	104.10	113.20	122.10	131.10	140.00
	KW	2.09	2.37	2.67	3.00	3.37	3.78	4.25	4.78
60 (15.56)	TCG	68.30	66.90	65.10	63.10	60.80	58.20	55.20	51.70
	SDT	78.80	87.80	96.80	105.70	114.70	123.60	132.40	141.10
	KW	2.15	2.43	2.73	3.06	3.43	3.85	4.32	4.84
24ANB148A30 Low**									
30 (−1.11)	TCG	26.60	25.70	24.70	23.50	22.20	20.70	19.00	17.10
	SDT	65.50	75.20	84.80	94.40	104.00	113.50	123.00	132.50
	KW	1.31	1.54	1.78	2.02	2.29	2.60	2.96	3.36
35 (1.67)	TCG	30.00	29.00	27.80	26.50	25.10	23.40	21.60	19.60
	SDT	66.80	76.40	86.00	95.50	105.00	114.50	123.90	133.40
	KW	1.31	1.54	1.76	2.00	2.27	2.57	2.92	3.32
40 (4.44)	TCG	33.60	32.50	31.20	29.80	28.20	26.50	24.50	22.40
	SDT	68.10	77.60	87.20	96.60	106.10	115.50	124.90	134.30
	KW	1.31	1.53	1.75	1.99	2.25	2.54	2.88	3.28
45 (7.22)	TCG	37.60	36.30	34.90	33.40	31.70	29.80	27.70	25.40
	SDT	69.50	79.00	88.40	97.90	107.20	116.60	125.90	135.20
	KW	1.31	1.53	1.74	1.97	2.23	2.52	2.85	3.24
50 (10.0)	TCG	41.90	40.50	39.00	37.30	35.40	33.40	31.10	28.60
	SDT	71.10	80.40	89.80	99.20	108.50	117.70	127.00	136.10
	KW	1.32	1.53	1.74	1.96	2.21	2.49	2.82	3.20
55 (12.78)	TCG	46.50	45.00	43.30	41.50	39.40	37.20	34.80	32.10
	SDT	72.70	82.00	91.30	100.50	109.70	118.90	128.00	137.10
	KW	1.33	1.53	1.73	1.95	2.19	2.47	2.79	3.16
60 (15.56)	TCG	51.50	49.80	48.00	46.00	43.80	41.40	38.70	35.90
	SDT	74.40	83.60	92.80	102.00	111.10	120.20	129.20	138.20
	KW	1.35	1.54	1.73	1.94	2.18	2.45	2.76	3.12

See notes on page 51

CONDENSER ONLY RATINGS* CONTINUED

SST °F (°C)		CONDENSER ENTERING AIR TEMPERATURES °F (°C)							
		55 (12.78)	65 (18.33)	75 (23.89)	85 (29.44)	95 (35.0)	105 (40.56)	115 (46.11)	125 (51.67)
24ANB160A30 High**									
30 (−1.11)	TCG	48.10	46.80	45.30	43.60	41.60	39.30	36.80	33.90
	SDT	68.50	77.80	87.40	96.80	106.20	115.60	124.90	134.20
	KW	2.43	2.80	3.18	3.57	3.99	4.44	4.94	5.48
35 (1.67)	TCG	54.10	52.80	51.20	49.40	47.30	44.80	42.10	38.90
	SDT	69.70	79.10	88.50	97.90	107.30	116.50	125.80	135.00
	KW	2.49	2.86	3.23	3.63	4.05	4.50	5.00	5.55
40 (4.44)	TCG	59.80	58.40	56.60	54.60	52.30	49.60	46.60	43.10
	SDT	71.10	80.40	89.70	99.00	108.30	117.60	126.70	135.90
	KW	2.55	2.91	3.29	3.68	4.11	4.56	5.07	5.62
45 (7.22)	TCG	65.80	64.20	62.30	60.10	57.60	54.50	51.30	47.50
	SDT	72.60	81.80	91.00	100.30	109.50	118.60	127.70	136.80
	KW	2.62	2.98	3.35	3.75	4.17	4.62	5.13	5.69
50 (10.0)	TCG	72.00	70.30	68.20	65.80	63.00	59.80	56.20	52.10
	SDT	74.20	83.30	92.40	101.60	110.70	119.80	128.80	137.80
	KW	2.70	3.05	3.42	3.81	4.24	4.70	5.21	5.77
55 (12.78)	TCG	78.20	76.40	74.10	71.50	68.40	65.00	61.10	56.60
	SDT	75.80	84.90	93.90	103.00	112.00	121.00	129.90	138.80
	KW	2.78	3.13	3.50	3.89	4.31	4.78	5.28	5.84
60 (15.56)	TCG	84.80	82.80	80.30	77.40	74.00	70.20	66.00	61.20
	SDT	77.60	86.50	95.50	104.50	113.40	122.30	131.10	139.90
	KW	2.87	3.22	3.59	3.98	4.40	4.86	5.37	5.93
24ANB160A30 Low**									
30 (−1.11)	TCG	33.20	32.20	30.90	29.40	27.70	25.80	23.80	21.60
	SDT	66.20	75.90	85.50	95.10	104.60	114.10	123.60	133.10
	KW	1.66	1.98	2.31	2.67	3.07	3.53	4.07	4.70
35 (1.67)	TCG	37.20	36.00	34.60	33.00	31.10	29.10	26.90	24.50
	SDT	67.50	77.10	86.70	96.20	105.70	115.10	124.50	134.00
	KW	1.66	1.97	2.29	2.64	3.04	3.49	4.02	4.64
40 (4.44)	TCG	41.60	40.20	38.60	36.80	34.80	32.60	30.30	27.70
	SDT	68.80	78.40	87.90	97.30	106.70	116.10	125.50	134.90
	KW	1.66	1.96	2.28	2.62	3.01	3.45	3.97	4.58
45 (7.22)	TCG	46.20	44.80	43.00	41.10	38.90	36.50	34.00	31.20
	SDT	70.30	79.70	89.20	98.50	107.90	117.20	126.50	135.80
	KW	1.66	1.96	2.26	2.60	2.98	3.41	3.92	4.52
50 (10.0)	TCG	51.30	49.70	47.80	45.60	43.30	40.70	38.00	35.00
	SDT	71.80	81.20	90.50	99.80	109.10	118.30	127.50	136.70
	KW	1.67	1.96	2.26	2.58	2.95	3.38	3.88	4.47
55 (12.78)	TCG	56.70	54.90	52.90	50.60	48.00	45.30	42.30	39.10
	SDT	73.40	82.70	92.00	101.20	110.40	119.50	128.60	137.70
	KW	1.68	1.96	2.25	2.57	2.93	3.35	3.84	4.41
60 (15.56)	TCG	62.60	60.60	58.40	55.90	53.10	50.10	46.90	43.40
	SDT	75.20	84.30	93.50	102.60	111.70	120.70	129.80	138.80
	KW	1.70	1.97	2.25	2.56	2.91	3.32	3.80	4.36

* AHRI listing applies only to systems shown in Combination Ratings table.
KW – Outdoor Unit Kilowatts Only.
SDT – Saturated Temperature Leaving Compressor (°F)
SST – Saturated Temperature Entering Compressor (°F/°C)
TCG – Gross Cooling Capacity (1000 Btuh)

GUIDE SPECIFICATIONS
GENERAL

System Description

Outdoor-mounted, air-cooled, split-system air conditioner unit suitable for ground or rooftop installation. Unit consists of a hermetic compressor, an air-cooled coil, propeller-type condenser fan, and a control box. Unit will discharge supply air upward as shown on contract drawings. Unit will be used in a refrigeration circuit to match up to a packaged fan coil or coil unit.

Quality Assurance

— Unit will be rated in accordance with the latest edition of AHRI Standard 210.

— Unit will be certified for capacity and efficiency, and listed in the latest AHRI directory.

— Unit construction will comply with latest edition of ANSI/ ASHRAE and with NEC.

— Unit will be constructed in accordance with UL standards and will carry the UL label of approval. Unit will have c-UL approval.

— Unit cabinet will be capable of withstanding Federal Test Method Standard No. 141 (Method 6061) 500-hr salt spray test.

— Air-cooled condenser coils will be leak tested and pressure tested.

— Unit constructed in ISO9001 approved facility.

Delivery, Storage, and Handling

— Unit will be shipped as single package only and is stored and handled per unit manufacturer's recommendations.

Warranty (for inclusion by specifying engineer)

— U.S. and Canada only.

PRODUCTS

Equipment

— Factory assembled, single piece, air-cooled air conditioner unit. Contained within the unit enclosure is all factory wiring, piping, controls, compressor, refrigerant charge Puron® (R-410A), and special features required prior to field start-up.

Unit Cabinet

— Unit cabinet, including louvered coil guard, will be constructed of galvanized steel, bonderized, and coated with a powder coat paint.

Fans

— Condenser fan will be direct-drive propeller type, discharging air upward.

— Condenser fan motors will be totally enclosed, 1-phase type with class B insulation and permanently lubricated bearings. Shafts will be corrosion resistant.

— Fan blades will be statically and dynamically balanced.

— Condenser fan openings will be equipped with coated steel wire safety guards.

Compressor

— Compressor will be hermetically sealed.

— Compressor will be mounted on rubber vibration isolators.

Condenser Coil

— Condenser coil will be air cooled.

— Coil will be constructed of aluminum fins mechanically bonded to copper tubes which are then cleaned, dehydrated, and sealed.

Refrigeration Components

— Refrigeration circuit components will include liquid-line shutoff valve with sweat connections, vapor-line shutoff valve with sweat connections, system charge of Puron® (R-410A) refrigerant, and compressor oil.

— Unit will be equipped with high-pressure switch, low pressure switch and filter drier for Puron refrigerant.

Operating Characteristics

— The capacity of the unit will meet or exceed _____ Btuh at a suction temperature of _____ °F/°C. The power consumption at full load will not exceed _____ kW.

— Combination of the unit and the evaporator or fan coil unit will have a total net cooling capacity of _____ Btuh or greater at conditions of _____ CFM entering air temperature at the evaporator at _____ °F/°C wet bulb and _____ °F/°C dry bulb, and air entering the unit at _____ °F/°C.

— The system will have a SEER of _____ Btuh/watt or greater at DOE conditions.

Electrical Requirements

— Nominal unit electrical characteristics will be _____ v, single phase, 60 hz. The unit will be capable of satisfactory operation within voltage limits of _____ v to _____ v.

— Unit electrical power will be single point connection.

— Control circuit will be 24v.

Special Features

— Refer to section of this literature identifying accessories and descriptions for specific features and available enhancements.

SYSTEM DESIGN SUMMARY

1. Intended for outdoor installation with free air inlet and outlet. Outdoor fan external static pressure available is less than 0.01-in. w.c.
2. This product is qualified for low ambient cooling operation (below 55°F/12.8°C) when used with an Infinity User Interface ONLY.
3. The maximum outdoor operating ambient in cooling mode is 125°F (51.67°C).
4. For reliable operation, unit should be level in all horizontal planes.
5. For interconnecting refrigerant tube lengths greater than 80 ft (23.4 m) and/or 35 ft (10.7 m) vertical differential, consult Residential Piping and Longline Guideline and Service Manual available from equipment distributor.
6. If any refrigerant tubing is buried, provide a 6 in. (152.4 mm) vertical rise to the valve connections at the unit. Refrigerant tubing lengths up to 36 in. (914.4 mm) may be buried without further consideration. Do not bury refrigerant lines longer than 36 in. (914.4 mm).
7. Use only copper wire for electric connection at unit. Aluminum and clad aluminum are not acceptable for the type of connector provided.
8. Do not apply capillary tube indoor coils to these units.
9. Factory-supplied filter drier must be installed.

Copyright 2011 Carrier Corp. • 7310 W. Morris St. • Indianapolis, IN 46231 Printed in U.S.A. Edition Date: 08/11

Catalog No. 24ANB1 – 3PD

Manufacturer reserves the right to change, at any time, specifications and designs without notice and without obligations.

Replaces: 24ANB1 – 2PD