40GJ*F
Floor Console Ductless Split System
Sizes 09 to 18

Carrier
turn to the experts

Owner' s Manual

Puron
the environmentally sound refrigerant

NOTE: Read the entire instruction manual before starting the installation.

NOTE TO EQUIPMENT OWNER:

Please read this Owner's Information Manual carefully before installing and using this appliance and keep this manual for future reference.

For your convenience, please record the model and serial numbers of your new equipment in the spaces provided. This information, along with the installation data and dealer contact information, will be helpful should your system require maintenance or service.

UNIT INFORMATION

Model # _____

Serial # _____

INSTALLATION INFORMATION

Date Installed _____

DEALERSHIP CONTACT INFORMATION

Company Name: _____

Address: _____

_____

Phone Number: _____

Technician Name: _____

_____

SAFETY CONSIDERATIONS

Installing, starting up, and servicing air-conditioning equipment can be hazardous due to system pressures, electrical components, and equipment location (roofs, elevated structures, etc.).

Only trained, qualified installers and service mechanics should install, start-up, and service this equipment.

Untrained personnel can perform basic maintenance functions such as cleaning coils. All other operations should be performed by trained service personnel.

When working on the equipment, observe precautions in the literature and on tags, stickers, and labels attached to the equipment.

Follow all safety codes. Wear safety glasses and work gloves. Keep quenching cloth and fire extinguisher nearby when brazing. Use care in handling, rigging, and setting bulky equipment.

Read these instructions thoroughly and follow all warnings or cautions included in literature and attached to the unit. Consult local building codes and National Electrical Code (NEC) for special requirements. Recognize safety information. This is the safety-alert symbol ⚠. When you see this symbol on the unit and in instructions or manuals, be alert to the potential for personal injury.Understand these signal words: DANGER, WARNING, and CAUTION. These words are used with the safety-alert symbol. DANGER identifies the most serious hazards which **will** result in severe personal injury or death. WARNING signifies hazards which **could** result in personal injury or death. CAUTION is used to identify unsafe practices which **may** result in minor personal injury or product and property damage. NOTE is used to highlight suggestions which **will** result in enhanced installation, reliability, or operation.

⚠ WARNING

ELECTRICAL SHOCK HAZARD

Failure to follow this warning could result in personal injury or death.

Before installing, modifying, or servicing system, main electrical disconnect switch must be in the OFF position. There may be more than 1 disconnect switch. Lock out and tag switch with a suitable warning label.

⚠ WARNING

EXPLOSION HAZARD

Failure to follow this warning could result in death, serious personal injury, and/or property damage.

Never use air or gases containing oxygen for leak testing or operating refrigerant compressors. Pressurized mixtures of air or gases containing oxygen can lead to an explosion.

⚠ CAUTION

EQUIPMENT DAMAGE HAZARD

Failure to follow this caution may result in equipment damage or improper operation.

Do not bury more than 36 in. (914 mm) of refrigerant pipe in the ground. If any section of pipe is buried, there must be a 6 in. (152 mm) vertical rise to the valve connections on the outdoor units. If more than the recommended length is buried, refrigerant may migrate to the cooler buried section during extended periods of system shutdown. This causes refrigerant slugging and could possibly damage the compressor at start-up.

SYSTEM REQUIREMENTS

Allow sufficient space for airflow and servicing unit. See Fig. 1 for minimum required distances between unit and walls or ceilings.

Recommended Connection Method for Power and Communication Wiring (To minimize communication wiring interference)

Power Wiring:

The main power is supplied to the outdoor unit. The field supplied connecting cable from the outdoor unit to indoor unit consists of three (3) wires and provides the power for the indoor unit. Two wires are high voltage AC power and one is a ground wire.

Consult your local building codes and the NEC (National Electrical Code) or CEC (Canadian Electrical Code) for special requirements.

All wires must be sized per NEC or CEC and local codes. Use Electrical Data table MCA (minimum circuit amps) and MOCP (maximum over current protection) to correctly size the wires and the disconnect fuse or breakers respectively.

Per caution note, only copper conductors with a minimum 300 volt rating and 2/64-inch thick insulation must be used.

Communication Wiring:

A separate shielded copper conductor only, with a minimum 300 volt rating and 2/64-inch thick insulation, must be used as the communication wire from the outdoor unit to the indoor unit.

To minimize voltage drop of the control wire, use the following wire size and maximum lengths shown in the chart below:

Wire Size	Length ft (m)
18 AWG	50 (15)
16 AWG	50 (15) to 100 (30)

⚠ CAUTION

EQUIPMENT DAMAGE HAZARD

Failure to follow this caution may result in equipment damage or improper operation.

- Wires should be sized based on NEC and local codes.
- Use copper conductors only with a minimum 300 volt rating and 2/64 inch thick insulation.

Contents

OPERATION INSTRUCTIONS

1. Part names and their functions 1
2. How to use the remote control to operate the unit 2
3. Maintenance 7
4. Operating guide 10
5. Precautions 12
6. Checking before contact the service man 13

INSTALLATION INSTRUCTIONS

7. Installation of indoor unit 14
8. Routine check after installation 22
9. Configuration of connection pipe and additional volume of refrigerant..... 23

.

External static pressures at the appliance was tested is 0 lb/ft² (0 Pa)
Fuse link: T250 V; 3.15 A

System Tons	Unit Btuh	Volt-Ph @60Hz	Indoor Model Number
0.75	9,000	208/230-1	40GJQB09F-3
1	12,000	208/230-1	40GJQB12F-3
1.5	18,000	208/230-1	40GJQB18F-3

1 Part names and their functions

INDOOR UNIT

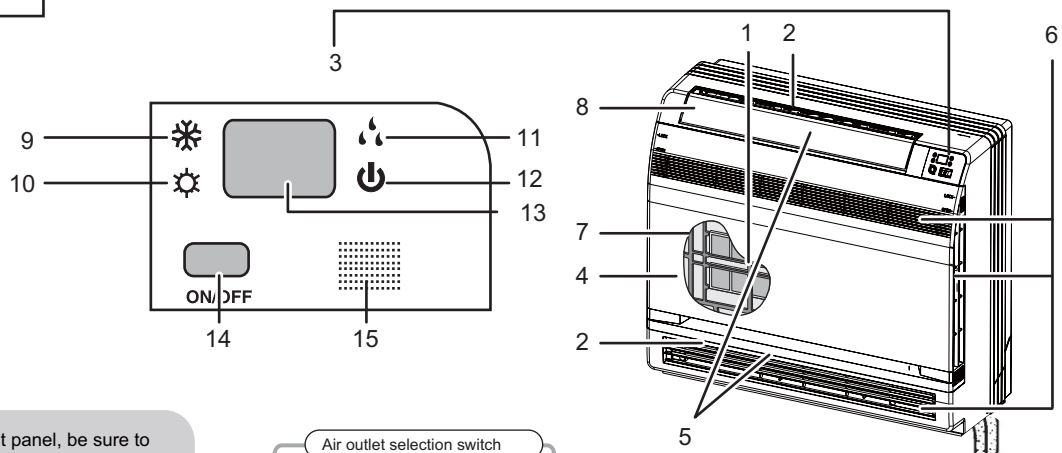

⚠CAUTION

Before opening the front panel, be sure to stop the operation and turn the breaker OFF.
Do not touch the metal parts on the inside of the indoor unit, as it may result in injury.

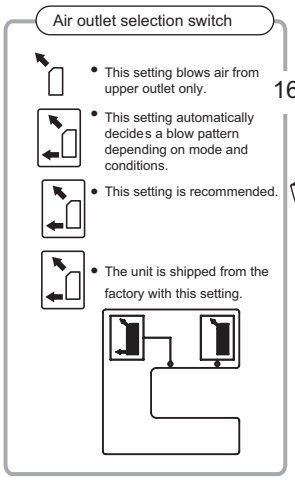

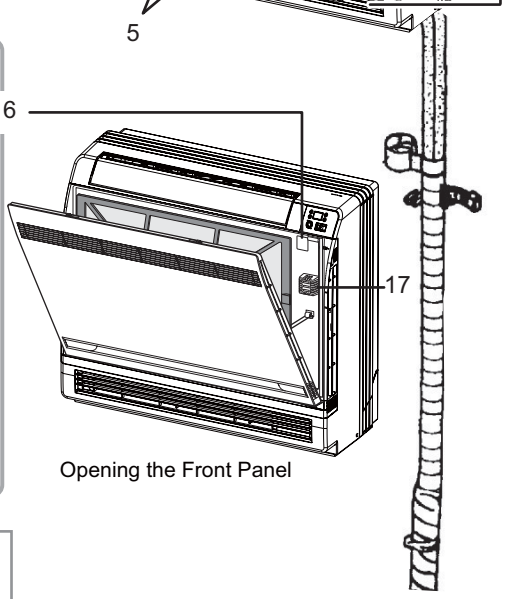

Opening the Front Panel

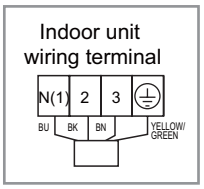

1. Titanium Apatite Photocatalytic Air-Purifying Filter:
   - These filters are attached to the inside of the air filters.
2. Air outlet
3. Display
4. Front panel
5. Louvers (vertical blades)
   - The louvers are inside of the air outlet.
6. Air inlet
7. Air filter
8. Flap (horizontal blade)
9. Cool mode lamp
10. Heat mode lamp
11. Dry mode lamp
12. Run lamp
13. LED display
14. Indoor Unit ON/OFF switch:
    - Push this switch once to start operation. Push once again to stop it.
    - The operation mode refers to the following table.

Model	Mode	Temperature setting	Air flow rate
COOLING ONLY	COOL	77 ℉ (25 ℃)	AUTO
HEAT PUMP	AUTO	77 ℉ (25 ℃)	AUTO

    - This switch is useful when the remote controller is missing.
15. Signal receiver:
    - It receives signals from the remote controller.
    - When the unit receives a signal, you will hear a short beep.
    - Settings changed.....beep
16. Air outlet selection switch
17. Room temperature sensor:
    - It senses the air temperature around the unit.

NOTE:
① If the supply cord is damaged, it must be replaced by the manufacturer or its service agent or a similarly qualified person in order to avoid a hazard.
② The appliance shall be installed in accordance with national wiring regulations.
③ An all-pole disconnection switch having a contact separation of at least 1/8 in (3 mm) in all poles should be connected in fixed wiring.

Remote Controller Description

1 ON/OFF
Press it to start or stop operation.

2 - : Press it to decrease temperature setting.

3 + : Press it to increase temperature setting.

4 MODE
Press it to select operation mode (AUTO/COOL/DRY/FAN/HEAT).

5 FAN
Press it to set fan speed.

6 SWING
Press it set swing angle.

7 I FEEL

8 / **(This function is only applicable for some models.)**
Press it to set HEALTH or AIR function.

9 SLEEP

10 TEMP

11 QUIET
Press it to set QUIET function.

12 CLOCK
Press it set clock.

13 T-ON|T-OFF
Press it to set auto-off/auto-on timer.

14 TURBO

15 LIGHT
Press it to turn on/off the light.

16 X-FAN

How to use the remote control to operate the unit

Remote Controller Description

1 ON/OFF :

Press this button to turn on the unit .Press this button again to turn off the unit.

2 —:

Press this button to decrease set temperature. Holding it down above 2 seconds rapidly decreases set temperature. In AUTO mode, set temperature is not adjustable.

3 + :

Press this button to increase set temperature.Holding it down above 2 seconds rapidly increases set temperature. In AUTO mode, set temperature is not adjustable.

4 MODE :

Each time you press this button,a mode is selected in a sequence that goes from AUTO, COOL,DRY, FAN,and HEAT *, as the following:

AUTO ▶ COOL ▶ DRY ▶ FAN ▶HEAT *

*Note:Only for models with heating function.

After energization, AUTO mode is defaulted. In AUTO mode, the set temperature will not be displayed on the LED of the indoor, and the unit will automatically select the suitable operation mode in accordance with the room temperature to make indoor room comfortable.

5 FAN:

This button is used for setting Fan Speed in the sequence that goes from AUTO, , , , to , then back to Auto.

Auto → → → → → →

Low speed Low-Medium speed Medium speed

Medium-High speed High speed

6 SWING:

Press this button to set up &down swing angle, which circularly changes as below:

OFF

This remote controller is universal . If any command , or is sent out, the unit will carry out the command as

indicates the guide louver swings as:

7 I FEEL:

Press this button to turn on I FEEL function. The unit automatically adjust temperature according to the sensed temperature. Press this button again to cancel I FEEL function.

8 /

Press this button to achieve the on and off of healthy and scavenging functions in operation status. Press this button for the first time to start scavenging function; LCD displays“ ”. Press the button for the second time to start healthy and scavenging functions simultaneously; LCD displays“ ” and “ ” . Press this button for the third time to quit healthy and scavenging functions simultaneously. Press the button for the fourth time to start healthy function; LCD display “ ” . Press this button again to repeat the operation above.

9 SLEEP:

- Press this button, can select Sleep 1 (1), Sleep 2 (2),Sleep 3 (3) and cancel the Sleep, circulate between these, after electrified, Sleep Cancel is defaulted.
- Sleep 1 is Sleep mode 1, in Cool, Dehumidify modes: sleep status after run for one hour, the main unit setting temperature will increase 1.8 ℉ (1 ℃) ,setting temperature increased 3.6 ℉ (2℃) , the unit will run at this setting temperature; In Heat mode: sleep status after run for one hour, the setting temperature will decrease 1.8 ℉ (1 ℃) , 2 hours, setting temperature will decrease 3.6 ℉ (2℃) , then the unit will run at this setting temperature
- Sleep 2 is sleep mode 2, that is air conditioner will run according to the presetting a group of sleep temperature curve.
- Sleep 3- the sleep curve setting under Sleep mode by DIY:

(1) Under Sleep 3 mode, press "Turbo" button for a long time, remote control enters into user individuation sleep setting status, at this time, the time of remote control will display "1 hour ", the setting temperature "88" will display the corresponding temperature of last setting sleep curve and blink (The first entering will display according to the initial curve setting value of original factory);

(2) Adjust "+" and "-" button, could change the corresponding setting temperature, after adjusted, press "Trubo "button for confirmation;

(3) At this time, 1 hour will be automatically increased at the timer postion on the remote control, (that are "2 hours " or "3 hours " or "8 hours "), the place of setting temperature "88" will display the corresponding temperature of last setting sleep curve and blink;

(4) Repeat the above step (2) ～ (3) operation, until 8 hours temperature setting finished, sleep curve setting finished, at this time, the remote control will resume the original timer display; temperature display will resume to original setting temperature.

Sleep3- the sleep curve setting under SLEEP mode by DIY could be inquired:

- The user could accord to sleep curve setting method to inquire the presetting sleep curve, enter into user individuation sleep setting status, but do not change the temperature, press "Turbo" button directly for confirmation.

Note: In the above presetting or enquiry procedure, if continuously within10s, there is no button pressed, the sleep curve setting within10s, there is no button pressed, the sleep curve setting status will be automatically quit and resume to display the original displaying. In the presetting or enquiry procedure, press "ON/OFF" button, "Mode" button, "Timer"button or "Sleep" button, the sleep curve setting or enquiry status will quit similarly.

10 TEMP:

Press this button, could select displaying the indoor setting temperature or indoor ambient temperature.When the indoor unit firstly power on it will display the setting temperature, if the temperature's displaying status is changed from other status to" ",displays the ambient temperature, 5s later or within 5s, it receives other remote control signal that will return to display the setting temperature. if the users haven't set up the temperature displaying status,that will display the setting temperature.

11 QUIET:

Press this button, the Quiet status is under the Auto Quiet mode (display "" and "Auto" signal) and Quiet mode (display " " singal) and Quiet OFF (there is no signal of " " displayed), after powered on, the Quiet OFF is defaulted. Note: the Quiet function cannot be set up in Fan and Dry mode;Under the Quiet mode (Display " " signal), the fan speed is not available.

12 CLOCK :

Press CLOCK button, blinking . Within 5 seconds,pressing +or - button adjusts the present time.Holding down either button above 2 seconds increases or decreases the time by 1 minute every 0.5 second and then by 10 minutes every 0.5 second. During blinking after setting, press CLOCK button again to confirm the setting,and then will be constantly displayed.

13 T-ON|T-OFF:

Press T-ON button to initiate the auto-ON timer. To cancel the auto-timer program, simply press this button again.

After press of this button, disappears and "ON "blinks .00:00 is displayed for ON time setting. Within 5 seconds, press + or - button to adjust the time value. Every press of either button changes the time setting by 1 minute. Holding down either button rapidly changes the time setting by 1 minute and then 10 minutes. Within 5 Seconds after setting, press TIMER ON button to confirm.

Press T-OFF button to initiate the auto-off timer. To cancel the auto-timer program, simply press the button again.TIMER OFF setting is the same as TIMER ON.

14 TURBO:

Press this button to activate / deactivate the Turbo function which enables the unit to reach the preset temperature in the shortest time. In COOL mode, the unit will blow strong cooling air at super high fan speed. In HEAT mode, the unit will blow strong heating air at super high fan speed.

15 LIGHT:

Press LIGHT button to turn on the display's light and press this button again to turn off the display's light. If the light is turned on , is displayed. If the light is turned off, disappears.

16 X-FAN:

Pressing X-FAN button in COOL or DRY mode,the icon is displayed and the indoor fan will continue operation for 10 minutes in order to dry the indoor unit even though you have turned off the unit.

After energization, X-FAN OFF is defaulted. X-FAN is not available in AUTO,FAN or HEAT mode.

17 Combination of "+" and "-" buttons: About lock

Press "+ " and "-" buttons simultaneously to lock or unlock the keypad. If the remote controller is locked, is displayed. In this case, pressing any button, blinks three times.

18 Combination of "MODE " and "-" buttons : About switch between Fahrenheit and centigrade

At unit OFF, press "MODE" and "-" buttons simultaneously to switch between ℃ and ℉.

19 Combination of " TEMP " and "CLOCK" buttons : About Energy-saving Function

Press “TEMP” and “CLOCK” simultaneously in COOL mode to start energy-saving function. Nixie tube on the remote controller displays “SE”. Repeat the operation to quit the function.

20 Combination of " TEMP " and "CLOCK" buttons : About 46℉(8℃) Heating Function

Press “TEMP” and “CLOCK” simultaneously in HEAT mode to start 46 ℉ (8 ℃) Heating Function Nixie tube on the remote controller displays “$” and a selected temperature of “46℉ (8℃).” Repeat the operation to quit the function.

21 About Back-lighting Function

The unit lights for 4s when energizing for the first time, and 3s for later press.

Replacement of Batteries

1.Remove the battery cover plate from the rear of the remote controller. (As shown in the figure)

2.Take out the old batteries.

3.Insert two new AAA1.5V dry batteries, and pay attention to the polarity.

4. Reinstall the battery cover plate.

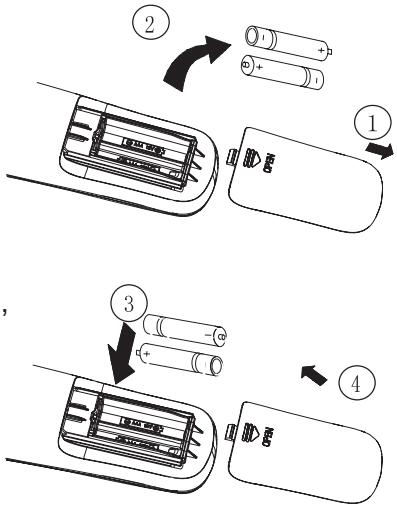

Sketch map for replacing batteries

★ Notes:

- When replacing the batteries, do not use old or different types of batteries, otherwise, it may cause malfunction.
- If the remote controller will not be used for a long time, please remove batteries to prevent batteries from leaking.
- The operation should be performed in its receiving range.
- It should be kept 1m away from the TV set or stereo sound sets.
- If the remote controller does not operate normally, please take the batteries out and reinsert them after 30 seconds.If it still can't operate properly, replace the batteries.

3 Maintenance

Before inspection and maintenance of the unit. PLEASE set power switch to “OFF” to cut off the power supply.

3.1 Units

● Indoor unit, Outdoor unit and Remote controller

1. Wipe them with dry soft cloth.

● Front panel

1. Open the front panel.

   Slide the two stoppers on the left and right sides inward until they click.

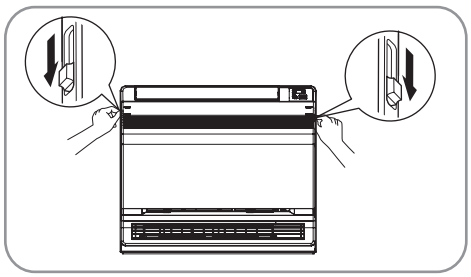

2. Remove the front panel.
   - Remove the string.
   - Allowing the front panel to fall forward will enable you to remove it.

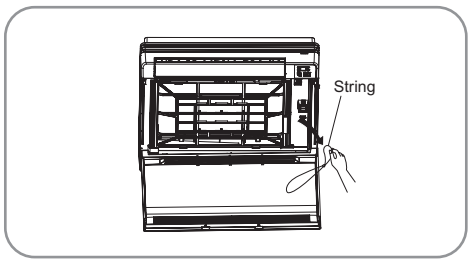

3. Clean the front panel.
   - Wipe it with a soft cloth soaked in water.
   - Only neutral detergent may be used.
   - In case of washing the front panel with water,dry it with cloth, dry it up in the shade after washing.

4. Attach the front panel.
   - Insert the front panel into the grooves of the unit (3 places).
   - Attach the string to the right, inner-side of the front grille.
   - Close the panel slowly.

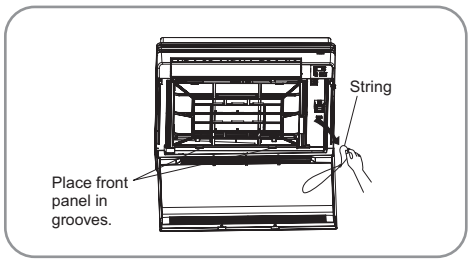

CAUTION

- Don’t touch the metal parts of the indoor unit. If you touch those parts, this may cause an injury.
- When removing or attaching the front panel, use a robust and stable stool and watch your steps carefully.
- When removing or attaching the front panel, support the panel securely with hand to prevent it from falling.
- For cleaning, do not use hot water above104 ℉ (40 ℃) , benzine, gasoline, thinner, nor other volatile oils, polishing compound, scrubbing brushes, nor other hand stuff.
- After cleaning, make sure that the front panel is securely fixed.

3.2 Filters

1. Open the front panel.
2. Remove the air filter.
   - Press the claws on the right and left of the air filter down slightly, then pull upward.
3. Take off the Titanium Apatite Photocatalytic Air-Purifying Filter.
   - Hold the tabs of the frame, and remove the claws in 4 places.

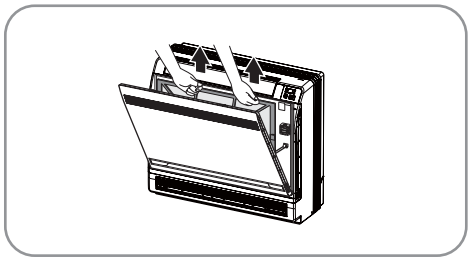

4. Clean or replace each filter.
   See figure.

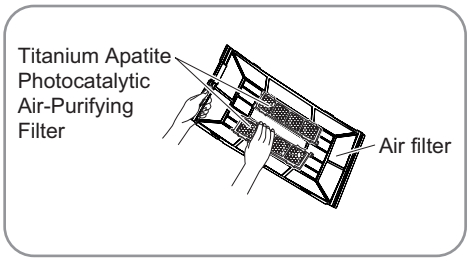

5. Set the air filter and Titanium Apatite Photocatalytic Air-Purifying Filter as they were and close the front panel.
   - Operation without air filters may result in troubles as dust will accumulate inside the indoor unit.

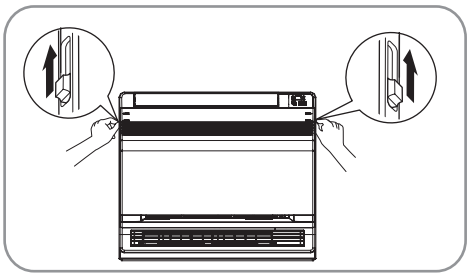

6. Wash the air filters with water or clean them with vacuum cleaner.
   - If the dust does not come off easily, wash them with neutral detergent thinned with lukewarm water, then dry them up in the shade.
   - It is recommended to clean the air filters every week.

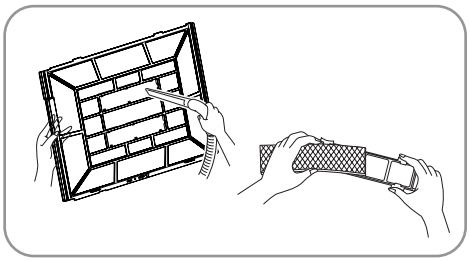

3.3 Titanium Apatite Photocatalytic Air-Purifying Filter

The Titanium Apatite Photocatalytic Air-Purifying Filter can be renewed by washing it with water once every 6 months. We recommend replacing it once every 3 years.

● Maintenance

1. Vacuum dusts, and soak in warm water or water for about 10 to 15 minutes if dirt is heavy.
2. Do not remove filter from frame when washing with water.
3. After washing, shake off remaining water and dry in the shade.
4. Since the material is made out of paper, do not wring out the filter when removing water from it.

● Replacement

Remove the tabs on the filter frame and replace with a new filter.

- Dispose of the old filter as flammable waste.
- Dispose of the old filter as flammable waste.

NOTE

- Operation with dirty filters:
  (1) cannot deodorize the air. (2) cannot clean the air.
  (3) results in poor heating or cooling. (4) may cause odour.

Check

Check that the base, stand and other fittings of the outdoor unit are not decayed or corroded.
Check that nothing blocks the air inlets and the outlets of the indoor unit and the outdoor unit.
Check that the drain comes smoothly out of the drain hose during COOL or DRY operation. • If no drain water is seen, water may be leaking from the indoor unit. Stop operation and consult the service shop if this is the case.

3.4 Before a long idle period

1. Operate the “FAN only” for several hours on a fine day to dry out the inside.
   - Press “MODE” button and select “FAN” operation.
   - Press “ON/OFF” button and start operation.
2. After operation stops, turn off the breaker for the room air conditioner.
3. Clean the air filters and set them again.
4. Take out batteries from the remote controller.

NOTE

- When a multi outdoor unit is connected, make sure the heating operation is not used at the other room befure you use the fan operation.

Working principle and special functions for cooling

Principle:

Air conditioner absorbs heat in the room and transmit to outdoor and discharged, so that indoor ambient temperature decreased, its cooling capacity will increase or decrease by outdoor ambient temperature.

Anti-freezing function:

If the unit is running in COOL mode and in low temperature, there will be frost formed on the heat exchanger, when indoor heat exchanger temperature decreased below 32℉(0℃), the indoor unit microcomputer will stop compressor running and protect the unit.

Working principle and special functions for heating

Principle:

* Air conditioner absorbs heat from outdoor and transmits to indoor, in this way to increase room temperature. This is the heat pump heating principle, its heating capacity will be reduced due to outdoor temperature decrease.
* If outdoor temperature becomes very low, please operate with other heating equipments.

Defrosting:

* When outdoor temperature is low but high humidity, after a long while running, frost will form on outdoor unit, that will effect the heating effect, at this time, the auto defrosting function will act, the heat running will stop for 8-10mins.
* During the auto defrosting, the fan motors of indoor unit and outdoor unit will stop.
* During the defrosting, the indoor indicator flashes(or display “H1”), the outdoor unit may emit vapor, This is due to the defrosting, it isn't malfunction.
* After defrosting finished,the heating will recover automatically.

Anti-cool wind function:

In Heat mode, the following three kinds of status, if indoor heat exchanger hasn't achieve certain temperature that indoor fan motor will not start, in this way to prevent blowing cool wind (within 3mins):

1. Heat operation just startedup. 2. After Auto defrosting operation is finished.
3. Heating under low temperature.

The climate type of this unit is according to the nameplate.

Operating guide

- The temperature should not be set lower than what you need. This would result to increase energy cost.
- Clean the air filter every week for higher efficiency.
- Draw close curtains or close glass windows when cooling to prevent heat load from sun light which may cause more electricity cost.
- To distribute cool air through out the room, adjust air flow direction as shown by the arrows (see picture) to diffuse cool air.
- Close window and door while operating the unit to prevent leakage of cooled air to save energy.
- In case of ineffective ventilation, open the window to ventilate the room air once in a while but not too long since cooled air will be uselessly drained out.

5 Precautions

- Check electrical system (voltage and frequency). Use the proper power supply indicated on the unit to operate the airconditioner and only fuses with specified capacity. Do not use pieces of wire instead of fuse.

- Do not insert objects into the air inlet or outlet when the airconditioner is running as it may cause damage or personal injury. Also pay special attention when children are around.

- Do not channel the air flow directly at people, especially infants, aged persons, or patients.

- Turn off the airconditioner if, while running, electricity interference occurs. If the unit is not to be used for a long time, cut off the power supply main switch.

- Do not locate any obstacle against the air flow direction of indoor and outdoor unit. Inefficient performance or malfunction may result.

- Do not locate a heater or any other heat source close to the unit. The heat may deform plastic parts.

6 Checking before contact the service man

Check the following before contact the service man. You may find the solution to your problems. After checking, if it still does not operate, please contact your local dealer.

PROBLEM	CAUSES
No operation	● Check if eletrical wire is damaged & check if breaker switch is still on. ● Check if the power supply is in order. ● Check if the timer switch is on or not.
The air conditioner runs but does not cool enough.	● Check if the preset temperature is too high. ● Check if the sunlight shines directly into the room. ● Check if the door and window are opened. ● Check if there is anything obstructing the air discharge. ● Check if the exhaust fan still operates. ● Check if the air filter is dirty or clogged.
Vapor or mist fume coming out of the unit while running.	● Hot air in the room mixes with cool air. This causes smoke fume.
Inoperative remote control.	● Loosened or disconnected wire between the unit and the display. ● Check if the batteries are inserted in correct directions ● Check if the batteries are exhaused or not.

7 Installation of indoor unit

SELECTION OF INSTALLATION LOCATION.

- Such a place where cool air can be distributed throughout the room.
- Such a place where condensation water is easily drained out.
- Such a place that can handle the weight of indoor unit.
- Such a place which has easy access for maintenance.
- The appliance shall not be installed in the laundry.

THERE ARE 2 STYLES OF INSTALLATION.

- **CEILING TYPE**
- **FLOOR TYPE**

Each type is similar to the other as follows;

Indoor unit

The indoor unit should be sited in a place where:

1) the restrictions on installation specified in the indoor unit installation drawings are met.
2) both air intake and exhaust have clear paths met.
3) the unit is not in the path of direct sunlight.
4) the unit is away from the source of heat or steam.
5) there is no source of machine oil vapour (this may shorten indoor unit life).
6) cool(warm) air is circulated throughout the room.
7) the unit is away from electronic ignition type fluorwscent lamps (inverter or rapid stert type) as they may shorten the remote controller range.
8) the unit is at least 3.28 ft (1 m) away from any television or radio set(unit may cause interference with the picture or sound).

CAUTIONS FOR INSTALLATION WHERE AIR CONDITIONER TROUBLEIS LIABLE TOOCCUR.

- Where there is too much of oil area.
- Where it is acid base area.
- Where there is irregular electrical supply.

Indoor Unit Installation Drawings

The indoor unit may be mounted in any of the three styles shown here.

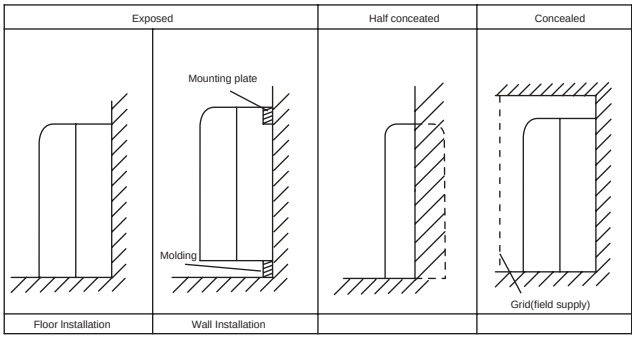

Location for securing the installation panel.

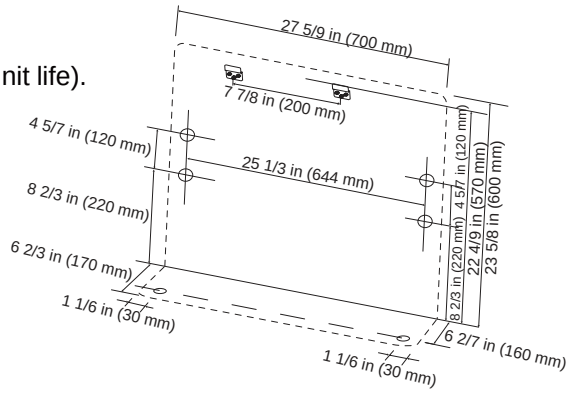

Schematic drawing of hooks:

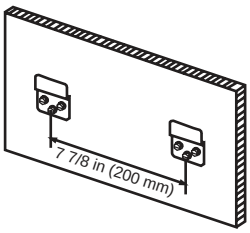

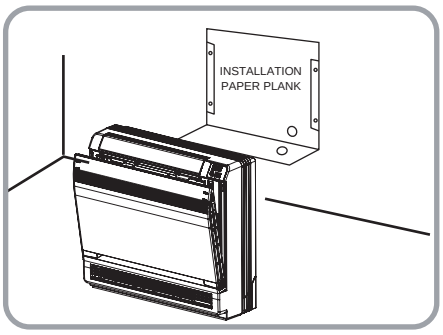

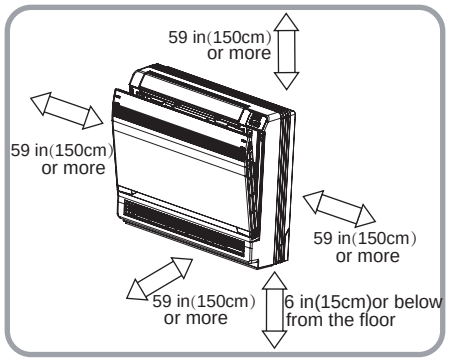

Refrigerant piping

1)Drill a hole (2 1/6 in (55 mm) in diameter) in the spot indicated by the ⊘ symbol in the illustration as below .
2)The location of the hole is different depending on which side of the pipe is taken out .
3)For piping ,see **Connecting the refrigerant pipe** ,under Indoor Unit Installation(1).
4)Allow space around the pipe for a easier indoor unit pipe connection.

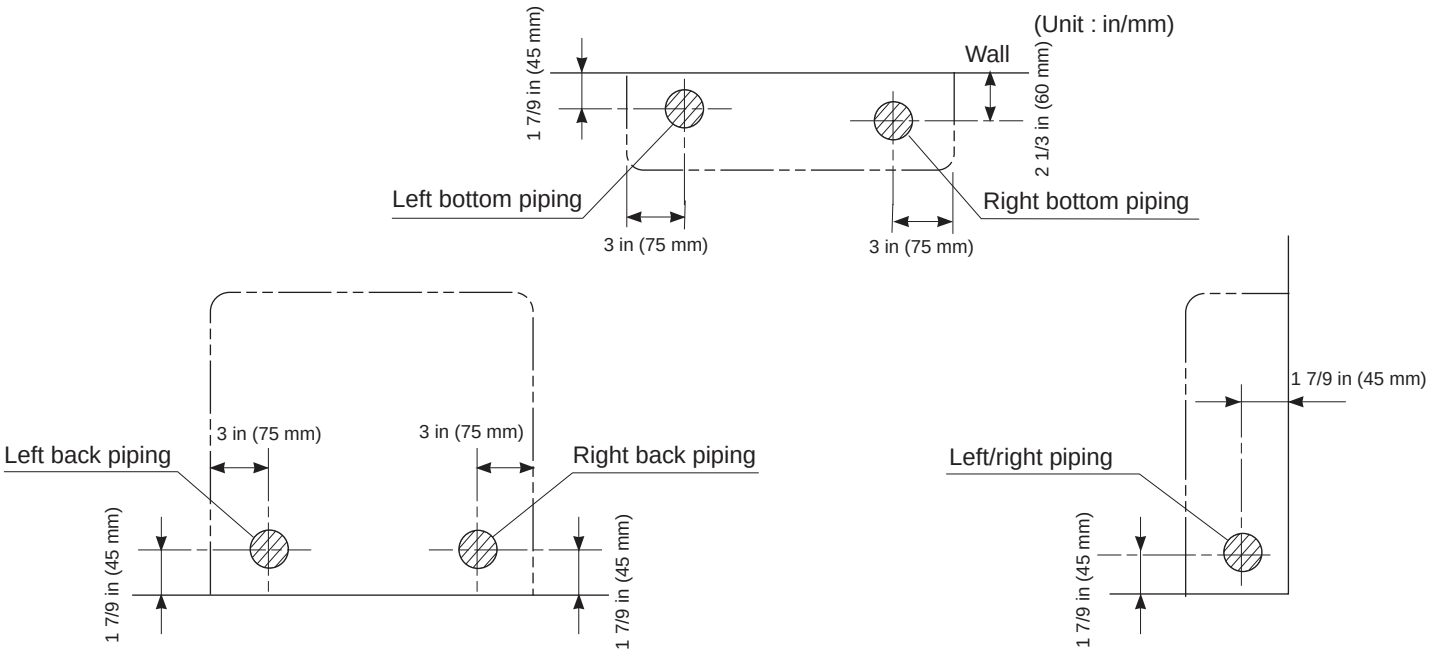

⚠ CAUTION

Min.allowable length

- The suggested shortest pipe length is 8.2 ft (2.5 m),in order to avoid noise from the outdoor unit and vibration. (Mechanical noise and vibration may occur depending on how the unit is installed and the environment in which it is used.)
- See the installation manual for the outdoor unit for the maximum pipe length.

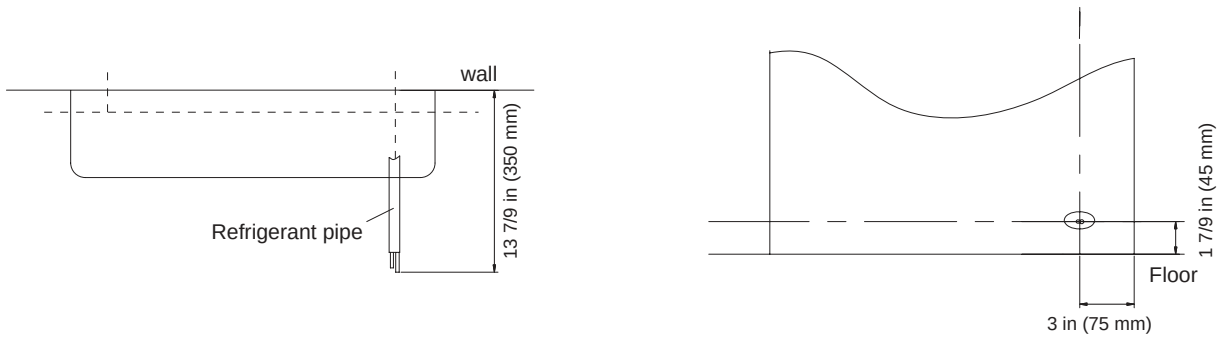

Boring a wall hole and installing wall embedded pipe

● For walls containing metal frame or metal board ,be sure to use a wall embedded pipe and wall cover in the feed-through hole to prevent water leakage.

● Be sure to caulk the gaps around the pipes with caulking material to prevent water leakage.

1)Bore a feed-through hole of 2 1/6 in (55 mm) in the wall so it has a down slope toward the outside.

2)Insert a wall pipe into the hole.

3)Insert a wall cover into wall pipe .

4)After completing refrigerant piping, wiring, and drain piping, caulk pipe hole gap with putty.

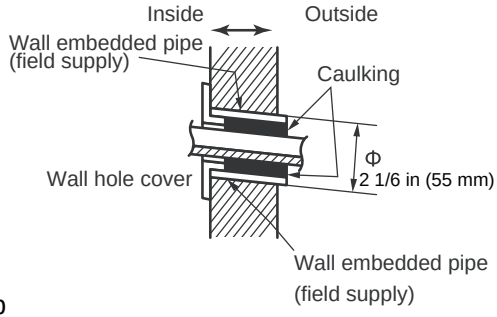

Drain piping

1)Use commercial regid polyvinyl chloride pipe（general VP 20 pipe, outer diameter 1 in (26 mm), inner diameter 4/5 in (20 mm)）for the drain pipe.

2)The drain hose (outer diameter 5/7 in (18 mm) at connecting end, 8 2/3 in (220 mm) long)is supplied with the indoor unit. Prepare the drain pipe picture below position.

3)The drain pipe should be inclined downward so that water will flow smoothly without any accumulation.(Should not be trap.)

4)Insert the drain hose to this depth so it won't be pulled out of the drain pipe.

5)Insulate the indoor drain pipe with 10mm or more of insulation material to prevent condensation.

6)Remove the air filters and pour some water into the drain pan to check the water flows smoothly.

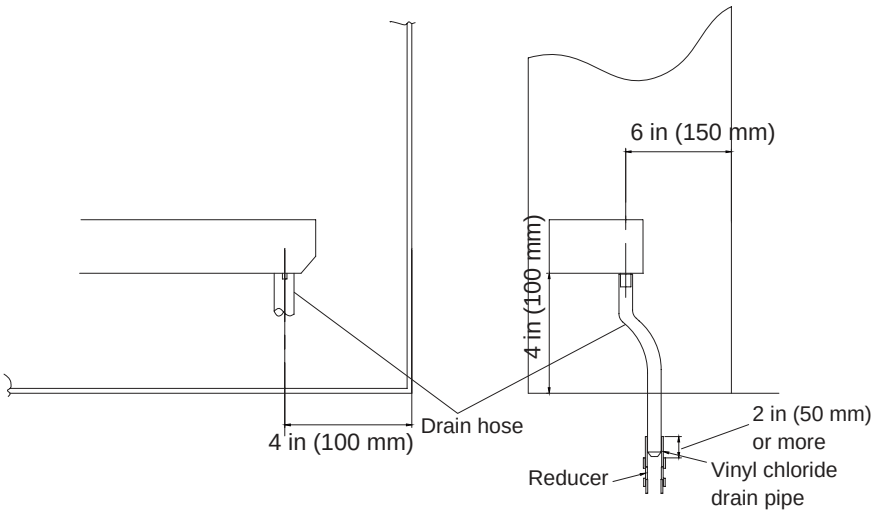

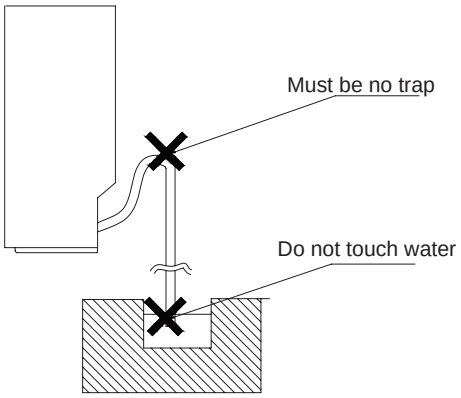

Installing indoor unit

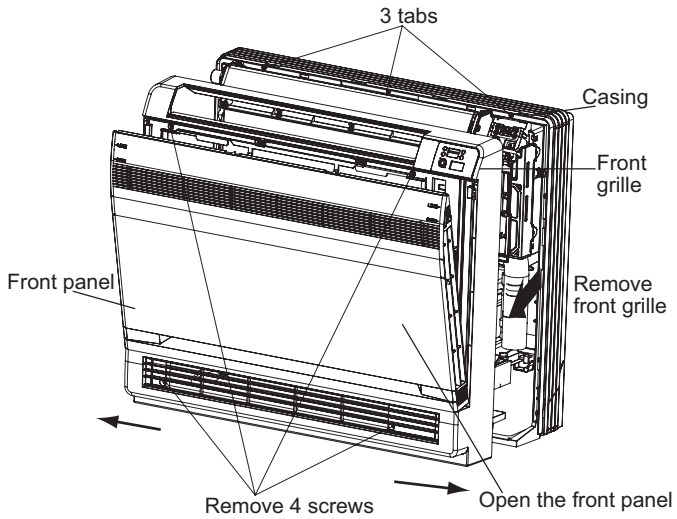

1.Preparation

● Open the front panel, remove the 4 screws and dismount the front grille while pulling it forward.

● Follow the arrows to disengage the clasps on the front case to remove it.

● Follow the procedure below when removing the slit portions.

■ **For Moldings**

● Remove the pillars. (Remove the slit portions on the bottom frame using nippers.)

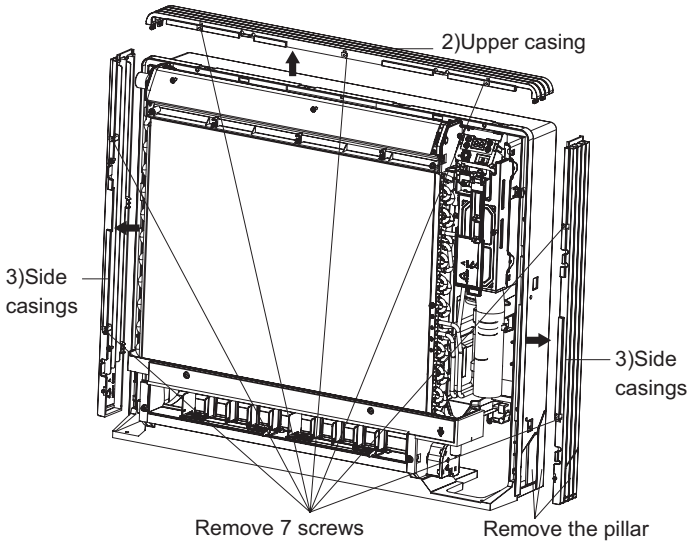

■ **For Side Piping**

● Remove the pillars.

1)Remove the 7screws.

2)Remove the upper casing (2 tabs).

3)Remove the left and right casings (2 tabs on each side).

4)Remove the slit portions on the bottom frame and casings using nippers .

5)Return by following the steps in reverse order(3>2>1).

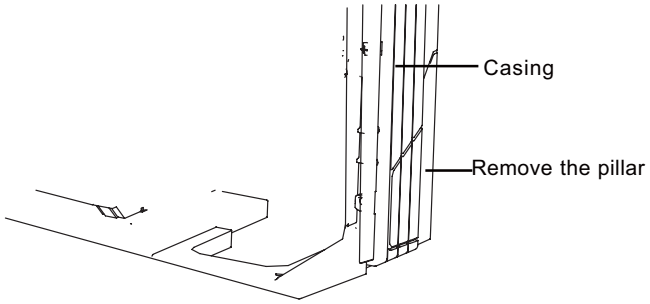

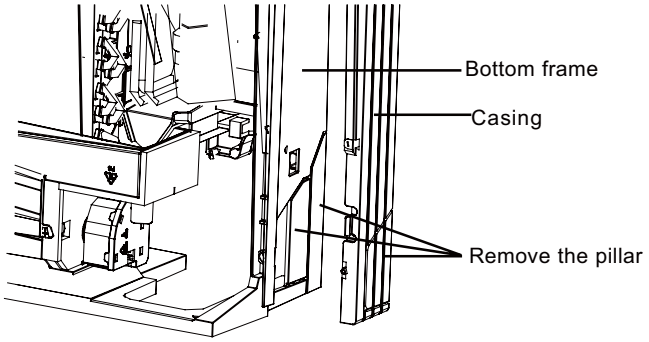

2.Installation

● Secure using 6 screws for floor installations.(Do not forget to secure to the rear wall.)

● For wall installations, secure the mounting plate using 5 screws and the indoor unit using 4 screws.

Installation of indoor unit

The mounting plate should be installed on a wall which can support the weight of the indoor unit.

1) Temporarily secure the mounting plate to the wall, make sure that the panel is completely level, and mark the boring points on the wall.
2) Secure the mounting plate to the wall with screws.

Floor Installation

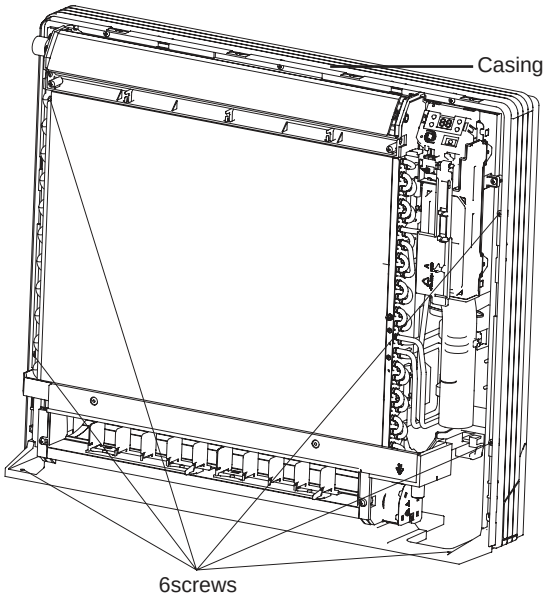

Wall Installation

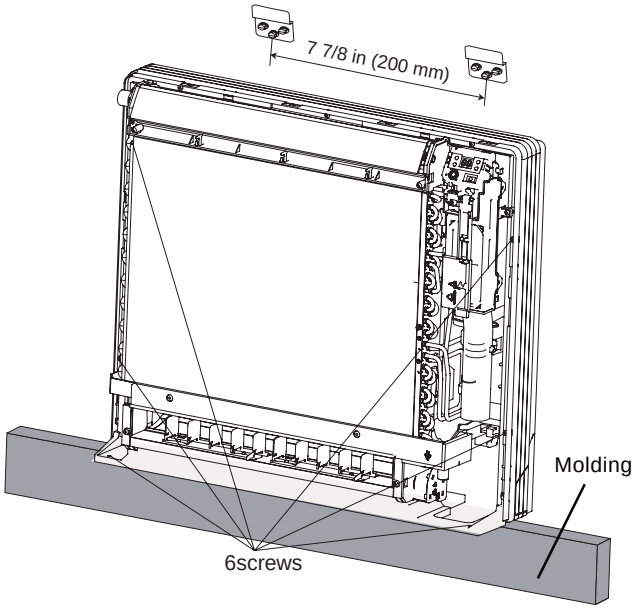

3) Once refrigerant piping and drain piping connections are complete, fill in the gap of the through hole with putty. A gap can lead to condensation on the refrigerant pipe, and drain pipe, and the entry of insects into the pipes.
4) Attach the front panel and front grille in their original positions once all connections are complete.

Flaring the pipe end

1)Cut the pipe end with a pipe cutter.
2)Remove burrs with the cut surface facing downward so that the chips do not enter the pipe.
3)Fit the flare nut on the pipe.
4)Flare the pipe.
5)Check that the flaring is properly made.

⚠ WARNING

1) DO not use mineral oil on flared part.
2) Prevent mineral oil from getting into the system as this would reduce the lifetime of the units.
3) Never use piping which had been used for previous installations. Only use parts which are delivered with the unit.
4) Do never install a drier to this R410A unit in order to guarantee its lifetime.
5) The drying material may dissolve and damage the system.
6) Incomplete flaring may cause refrigerant gas leakage.

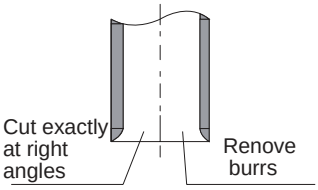

Flaring

Set exactly at the position shown below

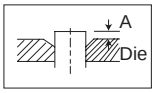

	Flare tool for R410A	Conventional flare tool	
	Clutch-type	Clutch-type (Rigid-type)	Wing-nut type (Imperial-type)
A	0~0.02 in (0~0.5 mm)	0.04~0.06 in (1.0~1.5 mm)	0.06~0.08 in (1.5~2.0 mm)

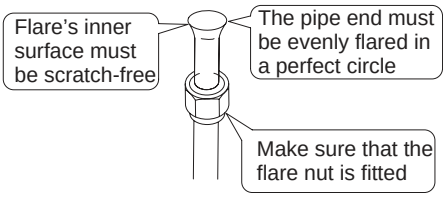

Connecting the refrigerant pipe

1)Use torque wrenches when tightening the flare nuts to prevent damage to the flare nuts and gas leaks.

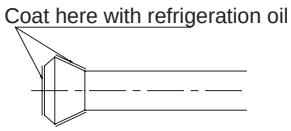

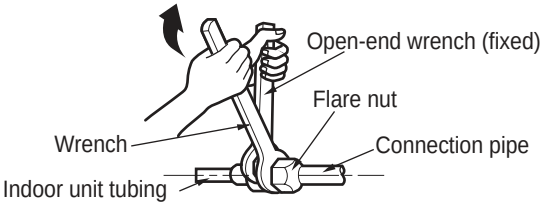

2)Align the centres of both flares and tighten the flares and tighten the flare nuts 3 or 4 turns by hand.
Then tighten them fully with the torque wrenches.
3)To prevent gas leakage, apply refrigeration oil on both inner and outer surfaces in the flare. (Use refrigeration oil for R410A.)

Flare nut tightening torque		
Gas side		Liquid side
09K/12K	18K	09K/12K/18K
3/8 inch	1/2 inch	1/4 inch
42~47.46 ft.lb (31~35 N.m)	67.8~74.58 ft.lb (50~55 N.m)	20.34~27.12 ft.lb (15~20 N.m)

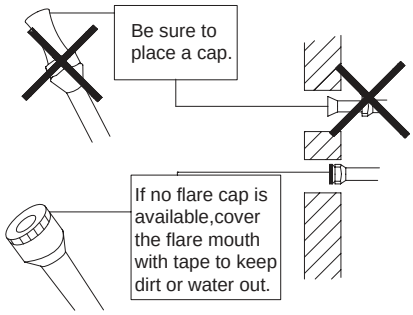

Caution on piping handling

1)Protect the open end of the pipe against dust and moisture.
2)All pipe bends should be as gentle as possible. Use a pipe bender for bending.
(Bending radius should be1 1/6 in (30 mm) to1 4/7 in (40 mm) or larger.)

Selection of copper and heat insulation materials

● When using commercial copper pipes and fittings, observe the following:
1)Insulation material: Polyethylene foam
Heat transfer rate:0.041 to 0.052W/mK(0.035 to 0.045kca/(mh℃)
Refrigerant gas pipe's surface temperature reaches 230℉(110℃) max.
Choose heat insulation materials that will withstand this temperature.

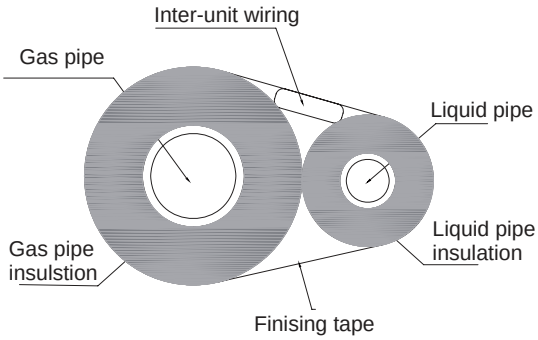

2)Be sure to insulate both the gas and liquid piping and to provide insulation dimensions as below.

Gas side		Liquid side	Gas pipe thermal insulation		Liquid pipe thermal insulation
09K/12K	18K		09K	18K	
O.D. 3/8 in (9.55 mm)	O.D. 1/2 in (12.7 mm)	O.D. 1/4 in (6.4 mm)	I.D. 1/2-3/5 in (12-15 mm)	I.D. 5/9-5/8 in (14-16 mm)	I.D. 1/3-2/5 in (8-10 mm)
Thickness 0.03 in (0.8 mm)			Thickness 2/5 in (10 mm) Min.		

3)Use separate thermal insulation pipes for gas and liquid refrigerant pipes.

Checking for gas leakage

1)Check for leakage of gas after air purging
2)See the sections on air purges and gas leak checks in the installation manual for the outdoor unit.

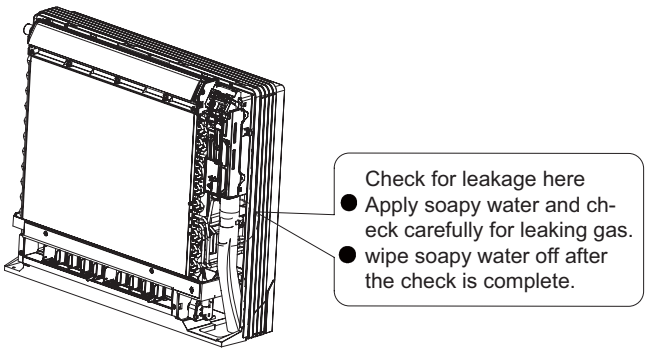

Attaching the connection pipe

● Attach the pipe after checking for gas leakage, described above.
1)Cut the insulated portion of the on-site piping, matching it up with the connecting portion.
2)Secure the slit on the refrigerant piping side with the butt joint on the auxiliary piping using the tape, making sure there are no gaps.
3)Wrap the slit and butt joint with the included insulation sheet, making sure there are no gaps.

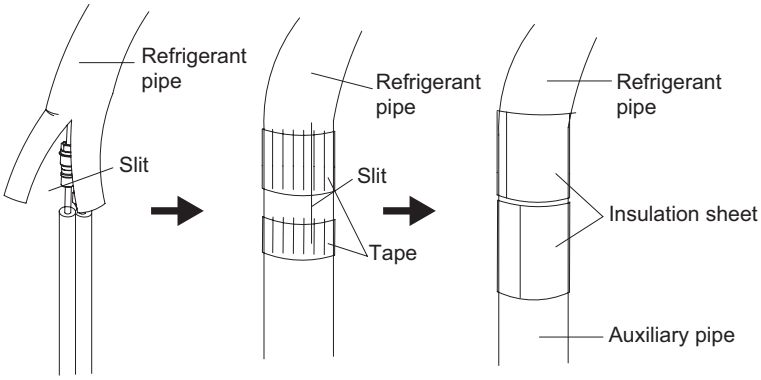

⚠ CAUTION

1)Insulate the joint of the pipes securely.
Incomplete insulation may lead to water leakage.
2)Push the pipe inside so it does not place undue force on the front grille.

Connecting the drain hose

Insert the supplied C drain hose into the socket of the drain pan.
Fully insert the drain hose until it adheres to a seat of the socket.

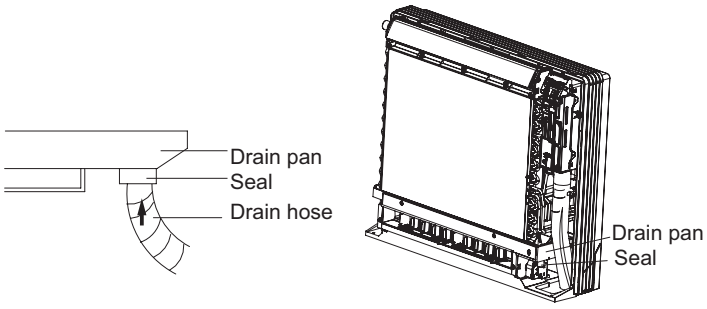

Installation of indoor unit

● Live the sensor securing plate, remove the front metal plate cover, and connect the branch wiring to the terminal block.

1)Strip wire ends 3/5 in (15 mm).

2)Mach wire colours with terminal numbers on indoor and outdoor unit's terminal blocks and firmly screw wires to the corresponding terminals.

3)Connect the earth wires to the corresponding terminals.

4)Pull wires to make sure that they are securely latches up, then retain wires with wire retainer.

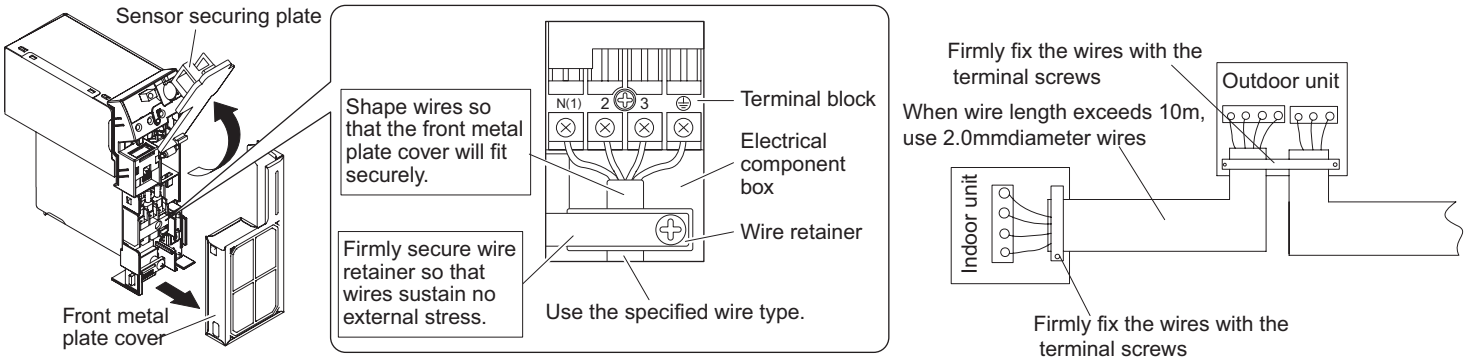

⚠ CAUTION

1)Do not use tapped wires, stranded wires, extensioncords, or starburst connections, as they may cause overheating, electrical shock, or fire.

2)Do not use locally purchased electrical parts inside the product. (Do not branch the power for the drain pump, etc, from the terminal block.) Doing so may cause electric shock or fire.)

8 Routine check after installation

Check after installation

Items to be checked	Possible malfunction	Situation
Has it been fixed firmly?	The unit may drop,shake or emit noise.	
Have you done the refrigerant leakage test?	It may cause insufficient refrigerating capacity.	
Is heat insulation sufficient?	It may cause condensation and dripping.	
Does the unit drain well?	It may cause condensation and dripping.	
Is the voltage in accordance with the rated voltage marked on the nameplate?	It may cause electric malfunction or damage the part.	
Is the electrical wiring and piping connection installed correctly and securely?	It may cause electric malfunction or damage the part.	
Has the unit been connected to a secure earth connection?	It may cause electrical leakage.	
Is the power cord specified?	It may cause electric malfunction or damage the part.	
Has the inlet and outlet been covered?	It may cause insufficient refrigerating capacity.	
Has the length of connection pipes and the refrigerant charge been record?	The refrigerating capacity is not accurate	

1. Standard length of connection pipe
   16.4 ft (5 m) 、 24.6 ft (7.5 m)、 26.25 ft (8 m)
2. Min length of connection pipe
   For the unit with standard connection pipe of 16.4 ft (5 m), there is no limitation for the min length of connection pipe. For the unit with standard connection pipe of 24.6 ft (7.5 m) and 26.25 ft (8 m), the min length of connection pipe is 9.84 ft (3 m).
3. Max length of connection pipe

Sheet 1 Max length of connection pipe Unit: ft/m

Capacity	Max length of connection pipe		Capacity	Max length of connection pipe
5000 Btu/h（1465 W）	49.21 ft (15 m)		24000 Btu/h（7032 W）	82 ft (25 m)
7000 Btu/h（2051 W）	49.21 ft (15 m)		28000 Btu/h（8204 W）	98.43 ft (30 m)
9000 Btu/h（2637 W）	49.21 ft (15 m)		36000 Btu/h（10548 W）	98.43 ft (30 m)
12000 Btu/h（3516 W）	65.62 ft (20 m)		42000 Btu/h（12306 W）	98.43 ft (30 m)
18000 Btu/h（5274 W）	82 ft (25 m)		48000 Btu/h（14064 W）	98.43 ft (30 m)

4. The calculation method of additional refrigerant oil and refrigerant charging amount after prolonging connection pipe
   After the length of connection pipe is prolonged for 32.8 ft (10 m) at the basis of standard length, you should add 1/3 in³(5ml) of refrigerant oil for each additional 16.4 ft (5 m) of connection pipe.
   The calculation method of additional refrigerant charging amount (on the basis of liquid pipe):
   (1) Additional refrigerant charging amount= prolonged length of liquid pipe × additional refrigerant charging amount per meter
   (2) When the length of connection pipe is above 16.4 ft (5 m), add refrigerant according to the prolonged length of liquid pipe. The additional refrigerant charging amount per meter is different according to the diameter of liquid pipe. See Sheet 2.

Sheet 2. Additional refrigerant charging amount for R410A

Diameter of connection pipe mm		Indoor unit throttle	Outdoor unit throttle	
Liquid pipe	Gas pipe	Cooling only, cooling and heating	Cooling only	Cooling and heating
Φ1/4 in (6 mm)	Φ3/8 in (9.5 mm) or Φ1/2 in (12mm)	0.2 oz/ft (20 g/m)	0.2 oz/ft (15 g/m)	0.2 oz/ft (20 g/m)
Φ1/4 in (6 mm) or Φ3/8 in (9.5 mm)	Φ5/8 in (16 mm) or Φ3/4 in (19 mm)	0.5 oz/ft (50 g/m)	0.2 oz/ft (15 g/m)	0.5 oz/ft (50 g/m)
Φ1/2 in (12mm)	Φ3/4 in (19 mm) or Φ7/8 in (22.2 mm)	1.1 oz/ft (100 g/m)	0.3 oz/ft (30 g/m)	1.3 oz/ft (120 g/m)
Φ5/8 in (16 mm)	Φ1 in (25.4 mm) or Φ1 1/4 in (31.8 mm)	1.8 oz/ft (170 g/m)	0.6 oz/ft (60 g/m)	1.3 oz/ft (120 g/m)
Φ3/4 in (19 mm)	–	2.7 oz/ft (250 g/m)	2.7 oz/ft (250 g/m)	2.7 oz/ft (250 g/m)
Φ7/8 in (22.2 mm)	–	3.8 oz/ft (350 g/m)	3.8 oz/ft (350 g/m)	3.8 oz/ft (350 g/m)

Note: The additional refrigerant charging amount in Sheet 2 is recommended value, not compulsory.

66129917363

Copyright 2014 Carrier Corporation • 7310 W. Morris St. • Indianapolis, IN 46231

Edition Date: 11/14

Catalog No: 40GJF-01OM

Manufacturer reserves the right to change, at any time, specifications and designs without notice and without obligations.

Replaces: New