40MPHB
High Wall Ductless System
Sizes 09 to 18

Carrier
Turn to the experts

Installation Instructions

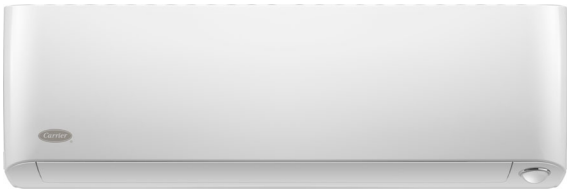

A220635

Fig. 1 — Sizes 09K to 12K

A220636

Fig. 2 — Size 18K

NOTES:

Read the entire instruction manual before starting the installation.

Images are for illustration purposes only. Actual models may differ slightly.

TABLE OF CONTENTS

PAGE

PARTS LIST 3
SYSTEM REQUIREMENTS 4
WIRING 4
DIMENSIONS 5
CLEARANCES 7
INSTALLATION TIPS 8
ELECTRICAL DATA 10
CONNECTION DIAGRAMS 10
WIRELESS REMOTE CONTROL INSTALLATION 13
WIRED REMOTE CONTROL INSTALLATION (18K) 13
START-UP 14
TROUBLESHOOTING 16
DUCTLESS START-UP CHECKLIST - Single Zone 17

Specifications subject to change without notice.

SAFETY CONSIDERATIONS

Installing, starting up, and servicing air-conditioning equipment can be hazardous due to system pressures, electrical components, and equipment location (roofs, elevated structures, etc.).

Only trained, qualified installers and service mechanics should install, start-up, and service this equipment.

Untrained personnel can perform basic maintenance functions such as coil cleaning. All other operations should be performed by trained service personnel only.

When working on the equipment, observe the precautions in the literature and on tags, stickers, and labels attached to the equipment.

Follow all safety codes. Wear safety glasses and work gloves. Keep a quenching cloth and a fire extinguisher nearby when brazing.

Use care in handling, rigging, and setting bulky equipment.

Read these instructions thoroughly and follow all warnings or cautions included in literature and attached to the unit. Consult local building codes and National Electrical Code (NEC) for special requirements. Recognize safety information.

This is the safety-alert symbol ⚠. When you see this symbol on the unit and in instructions or manuals, be alert to the potential for personal injury. Understand these signal words: **DANGER**, **WARNING**, and **CAUTION**. These words are used with the safety-alert symbol. **DANGER** identifies the most serious hazards which will result in severe personal injury or death. **WARNING** signifies hazards which could result in personal injury or death.

CAUTION is used to identify unsafe practices which may result in minor personal injury or product and property damage.

NOTE is used to highlight suggestions which will result in enhanced installation, reliability, or operation.

⚠ WARNING

ELECTRICAL SHOCK HAZARD
Failure to follow this warning could result in personal injury or death.
Before installing, modifying, or servicing system, the main electrical disconnect switch must be in the **OFF** position. There may be more than 1 disconnect switch.
Lock out and tag the switch with a suitable warning label.

⚠ WARNING

ELECTRICAL SHOCK HAZARD
Failure to follow this warning could result in death, serious personal injury, and/or property damage. Never use air or gases containing oxygen for leak testing or operating refrigerant compressors. Pressurized mixtures of air or gases containing oxygen can lead to an explosion.

⚠ CAUTION

EQUIPMENT DAMAGE HAZARD
Failure to follow this caution may result in equipment damage or improper operation.
Do not bury more than 36 in. (914 mm) of refrigerant pipe in the ground. If any section of pipe is buried, there must be a 6 in. (152 mm) vertical rise to the valve connections on the outdoor units. If more than the recommended length is buried, refrigerant may migrate to the cooler buried section during extended periods of system shutdown. This causes refrigerant slugging and could possibly damage the compressor at start-up.

Manufacturer reserves the right to change, at any time, specifications and designs without notice and without obligations.

PARTS LIST

Table 1 —Parts List

PART NAME	QUANTITY
Indoor Unit	1
Wall Mounting Plate	1
Wall Mounting Screw A ST3.9x25	5
Anchor	5
Air Filter	2
Wireless Remote Control	1
Wireless Remote Control Holder	1
Remote Control Mounting Screw B (ST2.9x10)	1
Battery AAA	2
Multi-function board (installed on the front panel) 9K-12K	1
Flare nuts for liquid and gas pipes	2
Installation Instructions	1
Owner's Manual	1
Warranty Card	1
Drain Adapter	1
Stencil	1
Wi-Fi USB Dongle	1

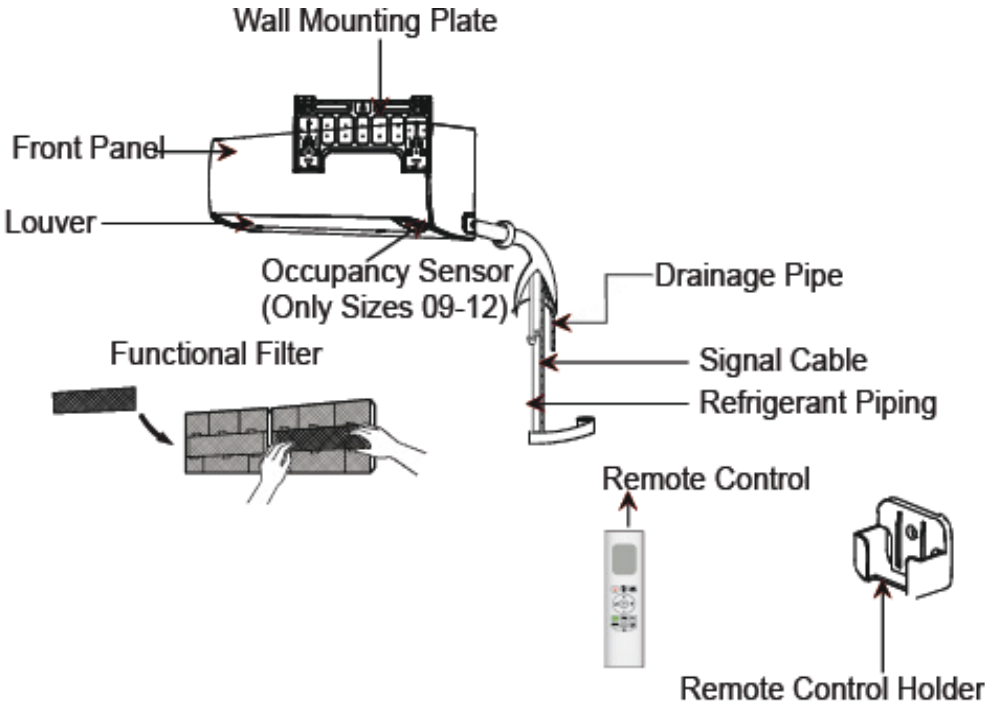

AA220637

Fig. 3 —Parts List

NOTES:

If the outdoor unit is higher than the indoor unit, prevent rain from flowing into the indoor unit along the connection pipe by creating a downward arc in the connection pipe before it enters the wall to the indoor unit. This ensures that rain drips from the connection pipe before it enters the wall.

The piping and the interconnecting wiring are field supplied.

Figure 3 is only a sketch. Different models may be slightly different.

The following units are covered in these installation instructions.

Table 2 — Unit Sizes

DESCRIPTION	kBTUh	V-Ph-Hz	OUTDOOR MODEL
High Wall Heat Pump	9	208/230-1-60	40MPHBQ09XA3
	12		40MPHBQ12XA3
	18		40MPHBQ18XA3

SYSTEM REQUIREMENTS

Allow sufficient space for airflow and service of the unit. See Fig. 6 for the required minimum distances between the unit, walls or ceilings.

Piping

IMPORTANT: Both refrigerant lines must be insulated separately.

Table 3 lists the pipe sizes for the indoor unit. Refer to the outdoor unit installation instructions for other allowed piping lengths and refrigerant information.

Table 3 — Indoor Unit Pipe Sizes

UNIT SIZE		9K (208-230V)	12K (208-230V)	18K (208-230V)
Gas Pipe	In.	1/2	1/2	5/8
	(mm)	12.7	12.7	15.9
Liquid Pipe	In.	1/4	1/4	3/8
	(mm)	6.35	6.35	9.52

All outdoor units have an electronic expansion valve that manage the refrigerant flow of the connected fan coil.

WIRING

All wires must be sized per NEC (National Electrical Code) or CEC (Canadian Electrical Code) and local codes. Use the Electrical Data table MCA (minimum circuit amps) and MOCP (maximum over current protection) to correctly size the wires and the disconnect fuse or breakers respectively.

Recommended Connection Method for Power and Communication Wiring

The main power is supplied to the outdoor unit. The field supplied 14/3 stranded wire with ground with a 600 volt insulation rating, power/communication wiring from the outdoor unit to the indoor unit consists of four (4) wires and provides the power for the indoor unit. Two wires are line voltage AC power, one is communication wiring (S) and the other is a ground wire. Wiring between the indoor and the outdoor unit is polarity sensitive. The use of BX wire is **NOT** recommended.

If installed in a high Electromagnetic field (EMF) area and communication issues exist, a 14/2 stranded shielded wire can be used to replace L2 and (S) between the outdoor unit and the indoor unit landing the shield onto the ground in the outdoor unit only.

⚠ CAUTION

EQUIPMENT DAMAGE HAZARD
Failure to follow this caution may result in equipment damage or improper operation.

Wires should be sized based on the NEC and local codes.

⚠ CAUTION

EQUIPMENT DAMAGE HAZARD
Failure to follow this caution may result in equipment damage or improper operation.
Be sure to comply with local codes while running wire from the indoor unit to the outdoor unit.
Every wire must be connected firmly. Loose wiring may cause the terminal to overheat or result in unit malfunction. A fire hazard may also exist. Ensure all wiring is tightly connected.
No wire should touch the refrigerant tubing, compressor or any moving parts.
Disconnecting means must be provided and shall be located within sight and readily accessible from the air conditioner.
Connecting cable with conduit shall be routed through the hole in the conduit panel.

Manufacturer reserves the right to change, at any time, specifications and designs without notice and without obligations.

DIMENSIONS

Table 4 — Indoor Unit Dimensions

HIGH WALL UNIT SIZE		9K	12K	18K
Voltage		(208/230V)	(208/230V)	(208/230V)
Height	In. (mm)	11.7 (298)	11.7 (298)	14.57 (370)
Width	In. (mm)	35.2 (895)	35.2 (895)	44.88 (1140)
Depth	In. (mm)	9.8 (248)	9.8 (248)	10.83 (275)
Weight-Net	Lbs (kg)	37.48 (17)	37.48 (17)	43.65(19.8)

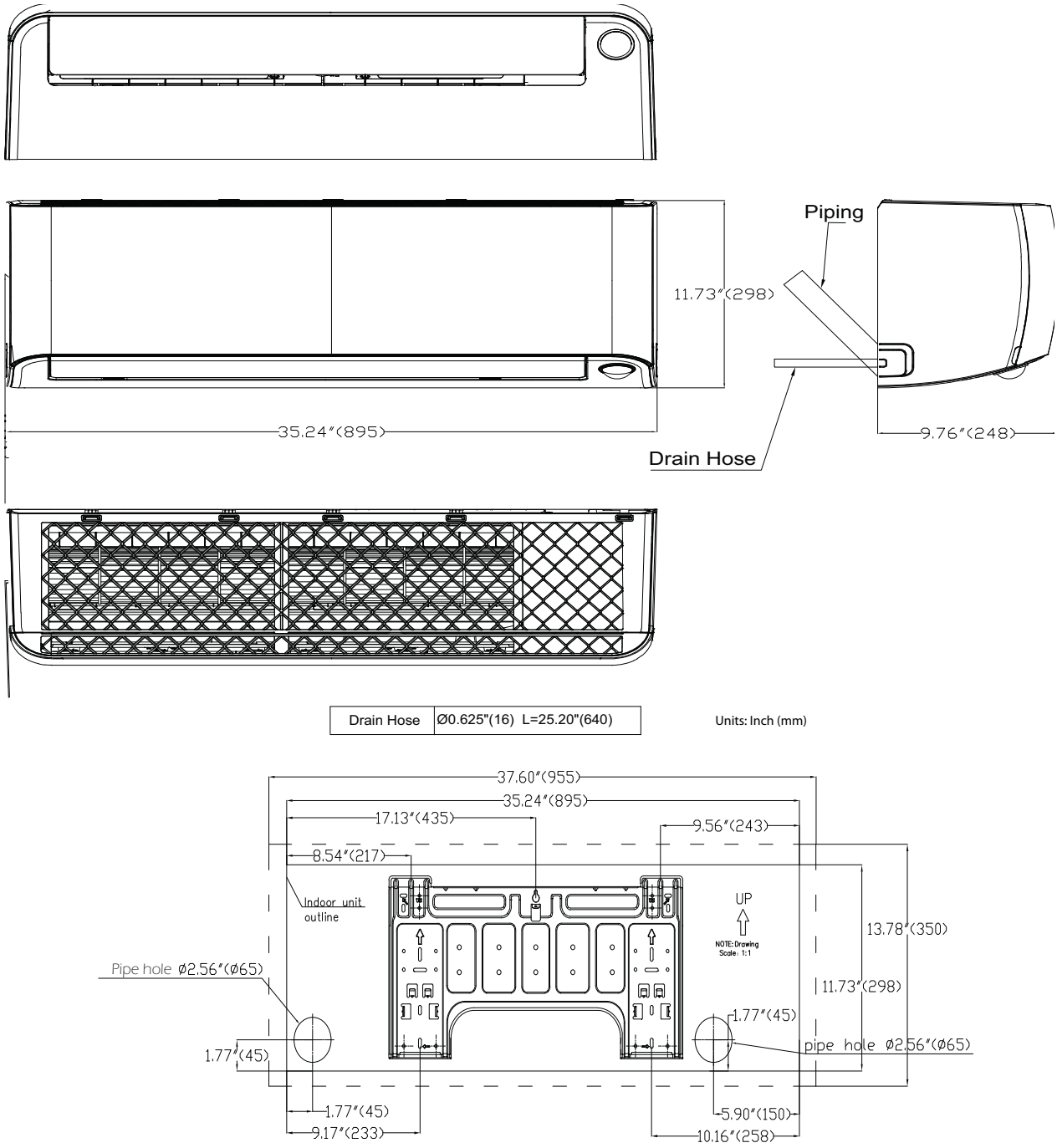

A220638

Fig. 4 —Sizes 9K and 12K

NOTE: A drain adapter is included with the indoor unit to allow the use of a 3/4 in. PVC Schedule 40 where the actual outside diameter is 1.05 in.

DIMENSIONS (CONT)

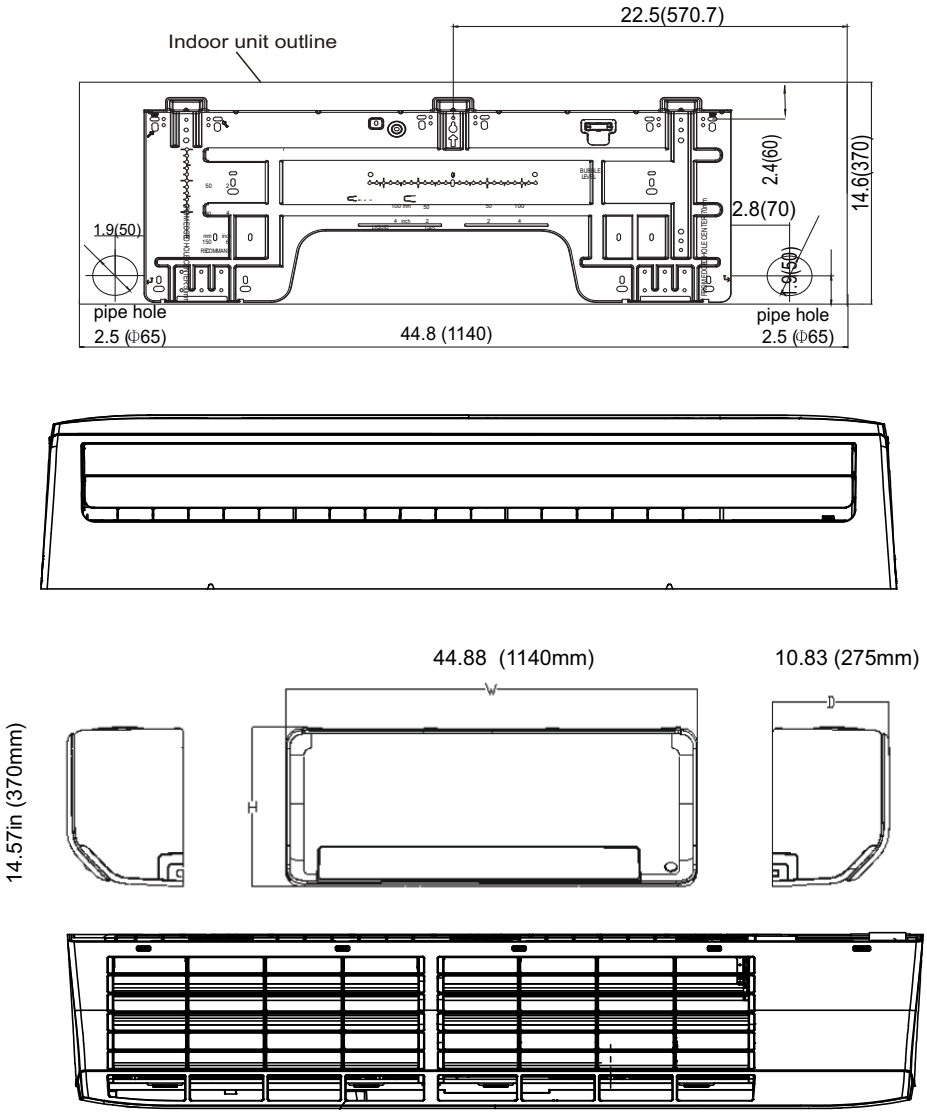

A220639

Fig. 5 —Size 18K

CLEARANCES

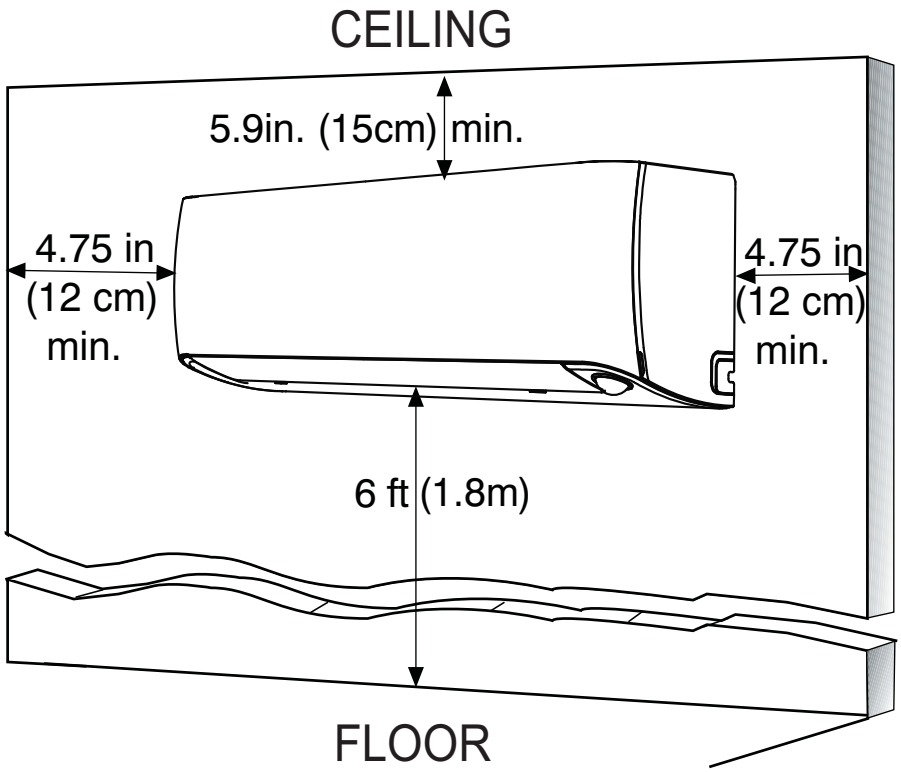

A220640

Fig. 6 —Unit Clearances

NOTE: The top clearance recommended for proper return airflow is 5.9in (15cm). Reduction of this clearance may decrease the performance of these units. This may be reduced to 3.2in (80mm) as long as the right and left clearances are achieved.

INSTALLATION TIPS

Ideal installation locations include:

Indoor Unit

- A location where there are no obstacles near the inlet and outlet area.
- A location which can bear the weight of the indoor unit.
- Do not install the indoor units near a direct source of heat such as direct sunlight or a heating appliance.
- A location which provides the appropriate clearances (see Fig. 6).

INDOOR UNIT INSTALLATION

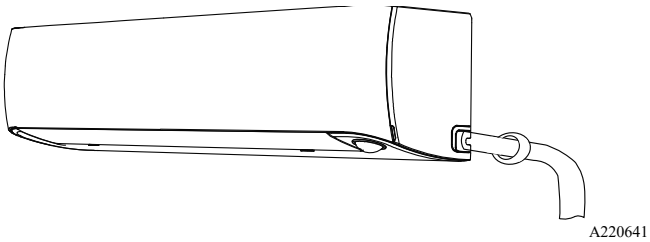

Fig. 7 —High Wall Unit

Prior to Installation

Before installing the indoor unit, ensure the compatibility with the outdoor unit using the product data as a reference.

Select the Installation Location:

Before installing the indoor unit, choose an appropriate location.

The following are standards that should help choose an appropriate location for the unit. Proper installation locations must meet the following standards:

1. Good air circulation
2. Convenient drainage
3. Noise from the unit will not disturb others
4. Firm and solid—the location will not vibrate
5. A site strong enough to support the weight of the unit
6. A location at least 3.28 ft. (1m) from all other electrical devices (e.g., TV, radio, computer)
7. **DO NOT** install the unit in the following locations:
   a. Near any source of heat, steam, or combustible gas
   b. Near flammable items such as curtains or clothing
   c. Near any obstacle that might block air circulation
   d. Near the doorway
   e. In a location subject to direct sunlight

NOTE: Wall Holes (If there is no fixed refrigerant piping.) While choosing a location, you should leave ample room for a wall hole (refer to the Drill Wall Hole for Connective Piping step) for the signal cable and refrigerant piping that connect the indoor and outdoor units. The default position for all piping is the right side of the indoor unit (while facing the unit). However, the unit can accommodate piping to both the left and right side.

Attach the Mounting Plate to the Wall:

1. Carefully remove the mounting plate, which is attached to the back of the indoor unit.
2. Use the stencil to determine the wall hole position. The mounting plate should be located horizontally and level on the wall. All minimum spacings shown in Fig. 6 should be maintained.
3. If the wall is block, brick, concrete or similar material, drill 0.2” (5 mm) diameter holes and insert the anchors for the appropriate mounting screws.
4. Attach the mounting plate to the wall.

Mounting Plate Dimensions

Different model sizes have different mounting plates. Ensure there is enough room to mount the indoor unit (refer to Figures 4 and 5). The following measurements can be found on these figures:

- Width of mounting plate
- Height of mounting plate
- Width of indoor unit relative to plate
- Height of indoor unit relative to plate
- Recommended position of the wall hole (both to the left and right of mounting plate)
- Relative distances between the screw holes.

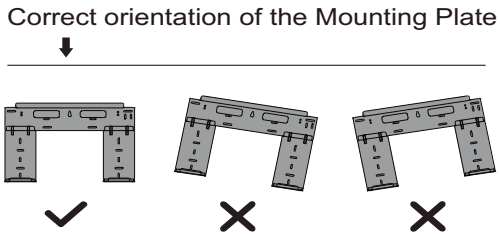

Fig. 8 —Mounting Plate Orientation

DRILL HOLE IN WALL FOR THE INTERCONNECTING PIPING, DRAIN AND WIRING

Refrigerant Line Routing

The refrigerant lines may be routed in any of the four directions shown in Fig. 10. For maximum serviceability, it is recommended to have the refrigerant line flare connections and the drain connections on the outside of the wall that the fan coil will be mounted on.

If piping is going through the back:

- Determine the pipe hole position using the mounting plate as a template. Drill pipe hole diameter per values given in Figures 4 and 5. The outside pipe hole is 1/2-in. (13 mm) min. lower than the inside pipe hole, so it slants slightly downward (see Fig. 9).

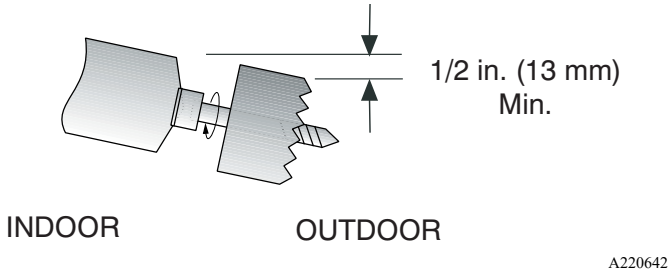

Fig. 9 —Drill Holes

If piping is going through the right or left side:

- Use a small saw blade to carefully remove the corresponding plastic covering on the side panel and drill the appropriate size hole where the pipe is going through the wall.

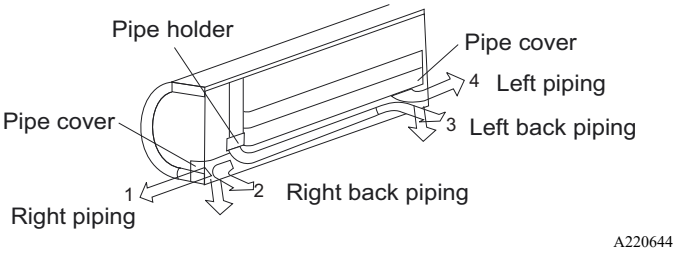

Fig. 10 —Piping Locations

Prepare the Refrigerant Piping

The refrigerant piping is inside an insulating sleeve attached to the back of the unit. Be sure to prepare the piping before passing it through the hole in the wall.

NOTE: (Piping Angle) Refrigerant piping can exit the indoor unit from four different angles facing the front of the unit (see Fig. 11):

1. Left-hand side
2. Left rear
3. Right-hand side
4. Right rear

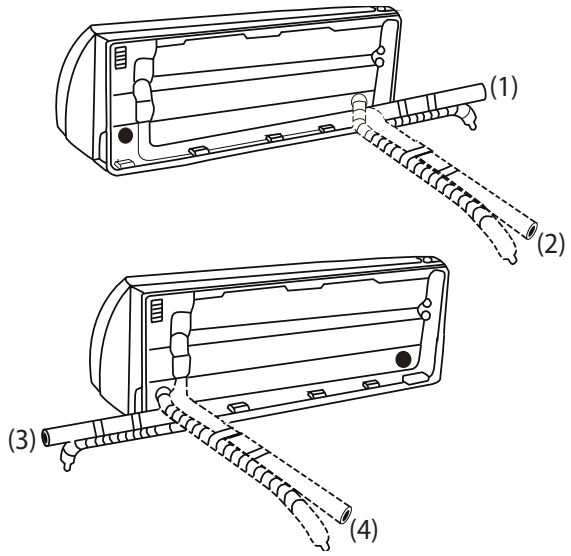

A220645

Fig. 11 —Piping Angle

WARNING

ELECTRICAL OPERATION HAZARD
Be extremely careful not to dent or damage the piping while bending it away from the unit. Any dents in the piping will affect the unit's performance.

If the refrigerant piping is already embedded in the wall, perform the following steps:

1. Hook the top of the indoor unit on the upper hook of the mounting plate. Keep in mind that the hooks on the mounting plate are smaller than the holes on the back of the unit. If there is not have ample room to connect the embedded pipes to the indoor unit, the unit can be adjusted left or right by about 1.25-1.95in. (30-50mm), depending on the model (see Fig. 12).

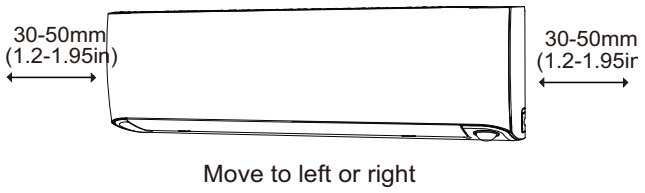

A220646

Fig. 12 —Hook Indoor Unit to Mounting Plate

2. Use the holders in the mounting plate to prop up the unit, allowing for enough space to connect the refrigerant piping, signal cable, and the drain hose.

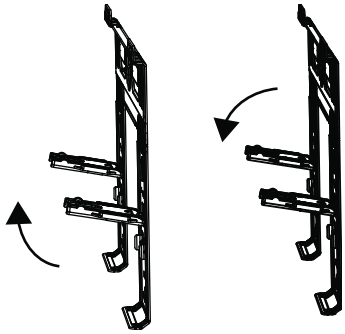

A220647

Fig. 13 —Use Holder to Prop up the Unit

3. Connect the drain hose and refrigerant piping.
4. Keep the pipe connection point exposed to perform the leak test.
5. After the leak test, wrap the connection point with insulation tape.
6. If the holders (see step 2.) are being used to prop out the unit, be sure to fold and latch them completely into the mounting plate. Remove any other bracket or wedge that is propping out the unit.
7. Using even pressure, push down on the bottom half of the unit. Keep pushing down until the unit snaps onto the hooks along the bottom of the mounting plate.

If there is no refrigerant piping embedded in the wall, perform the following steps:

1. Based on the position of the wall hole relative to the mounting plate, choose the side from which the piping will exit the unit.
2. If the wall hole is behind the unit, keep the knock-out panel in place. If the wall hole is to the side of the indoor unit, remove the plastic knock-out panel from that side of the unit (see Fig. 11). This creates a slot through which the piping can exit the unit. Use needle nose pliers if the plastic panel is too difficult to remove by hand.

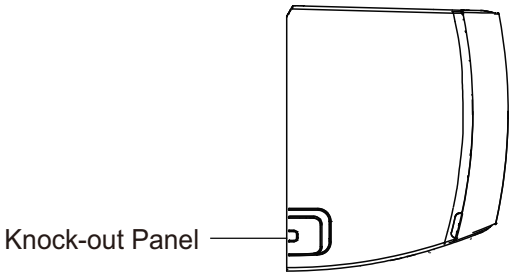

A220648

Fig. 14 —Knock-out Panel

3. Use scissors to cut down the length of the insulating sleeve to reveal about 1.57in. (40mm) of the refrigerant piping. This serves multiple purposes:
   a. To facilitate the refrigerant piping connection process
   b. To facilitate **Gas Leak Checks** and enable a check for kinks in the copper tubing.
4. Connect the indoor unit's refrigerant piping to the connective piping (line set) that joins the indoor and outdoor units.
5. Based on the position of the wall hole relative to the mounting plate, determine the necessary angle of the piping.
6. Grip the refrigerant piping at the base of the bend.
7. Slowly, with even pressure, bend the piping towards the hole. Do not kink or damage the piping during the process.

ELECTRICAL DATA

Table 5 — Electrical Data

HIGH WALL UNIT SIZE		INDOOR FAN			MAX FUSE CB AMP
		V-Ph-Hz	FLA	HP	
Heat Pump Models	9K	208/230-1-60	0.25	0.027	Refer to the outdoor unit installation instructions – Indoor unit powered by the outdoor unit
	12K		0.25	0.027	
	18K		0.13	0.004	

LEGEND
FLA- Full Load Amps

CONNECTION DIAGRAMS

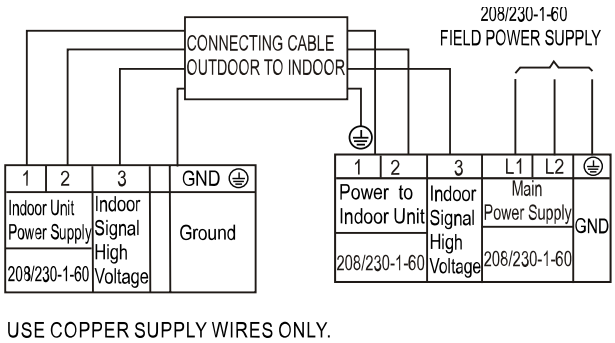

Fig. 15 —Connection Diagram Sizes 9K - 18K

NOTES:

1. Do not use a thermostat wire for any connection between the indoor and outdoor units.
2. All connections between the indoor and outdoor units must be as shown in figure 15. The connections are sensitive to polarity and will result in a fault code.

TERMINAL BLOCK LOCATION

1. Open the front panel of the indoor unit.
2. Using a screwdriver, open the wire box cover on the right side of the unit, then open the terminal block cover to reveal the terminal block.

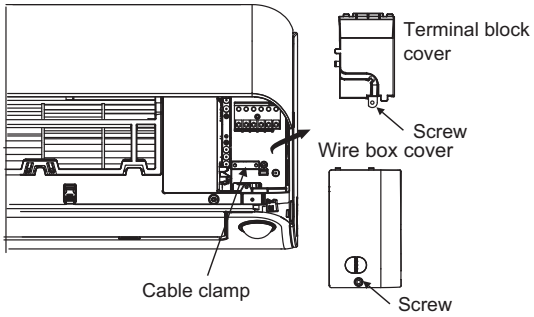

A220651

Fig. 16 —Terminal Block Location (9/12K)

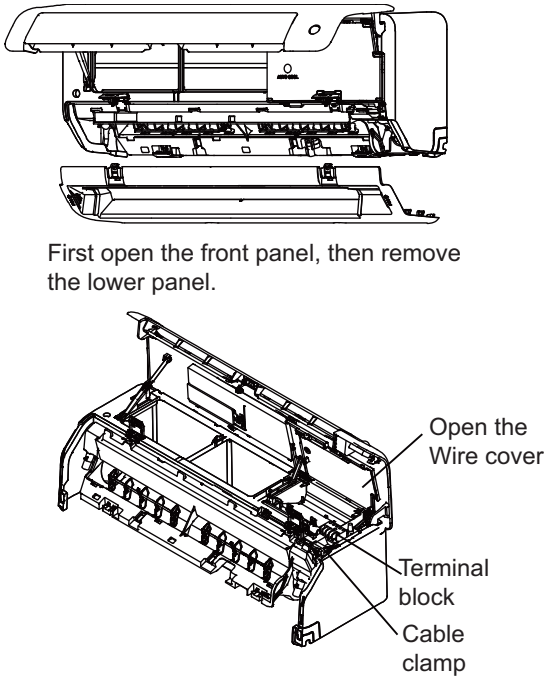

A220652

Fig. 17 —Wire Box Cover

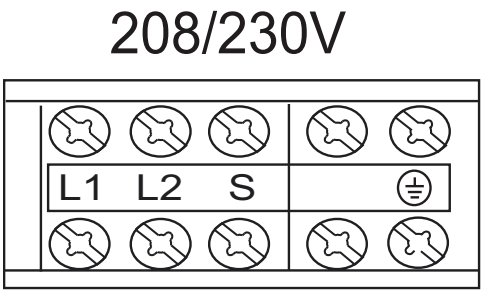

A220653

Fig. 18 —Control and Power Wiring on the Indoor Unit

INSTALL ALL POWER, INTERCONNECTING WIRING, AND PIPING TO THE INDOOR UNIT

1. Run interconnecting piping and wiring from the outdoor unit to indoor unit.
2. Run interconnecting cable through the hole in wall (outside to inside).
3. Lift the indoor unit into position and route the piping and drain through the hole in wall (inside to outside). Fit the interconnecting wiring into the back side of the indoor unit.
4. Put a upper claw at the back of the indoor unit on an upper hook of the Mounting Plate. Move the indoor unit from side to side to see that it is securely hooked.
5. Open the indoor unit's front panel by loosening the screws, which provides a large space for wiring connection.
6. Open the wire box cover to connect the cable.
7. Pull the interconnecting wire up from the back of the indoor unit and position in close to the terminal block on the indoor unit.
8. Push the lower part of the indoor unit up on wall, then move the indoor unit from side to side, up and down to check if it is hooked securely (see Fig. 19).

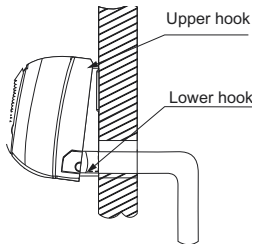

A220654

Fig. 19 —Indoor Unit Installation

9. Connect wiring from the outdoor unit per connection diagram (see Fig. 15 and Fig. 15).
10. Replace the wire cover on the front of the unit, and the plastic panel on the back.

Piping

a. Cut the pipe, with a pipe cutter, at 90° degrees (see Fig. 20).
b. Remove the service connection, if provided with the unit.

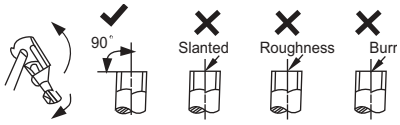

AA220655

Fig. 20 —Pipe Cutting

c. Remove all the burrs from the cut cross section of the pipe avoiding any burrs inside the tubes.
d. Remove the flare nuts attached to the indoor and outdoor units.
e. Install the correct size flare nut onto the tubing and make the flare connection. Refer to Table 6 for flare spacing.

Table 6 — Flare Spacing

OUTER DIAM. INCH (mm)	A inch (mm)	
	Max.	Min.
Ø 1/4" (6.35)	0.05 (1.3)	0.03 (0.7)
Ø 3/8" (9.52)	0.06 (1.6)	0.04 (1.0)
Ø 1/2" (12.7)	0.07 (1.8)	0.04 (1.0)
Ø 5/8" (15.88)	0.09 (2.2)	0.08 (2.0)

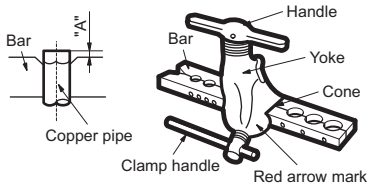

A220656

Fig. 21 —Flare Spacing

f. Apply a small amount of refrigerant oil to the flare connection on the tubing.

g. Align the center of the pipes and/or service valve.

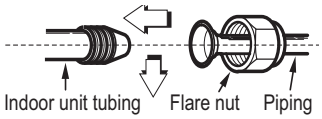

A220657

Fig. 22 —Align Pipe Center

h. Connect both the liquid and gas piping to the indoor unit.

i. Tighten the flare nut using a torque wrench as specified in Table 7.

Table 7 — Tightening Torque

PIPE DIAMETER INCH (mm)	TIGHTENING TORQUE	
	Ft-lb	N-m
Ø1/4" (6.35)	14.8 to 18.4	20-25
Ø3/8" (9.52)	14.8 to 18.4	20-25
Ø1/2" (12.7)	18.4 to 22.1	25-30

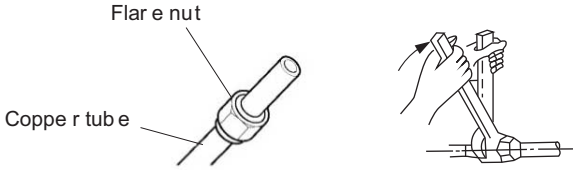

A220658

Fig. 23 —Tighten the Flare Nut

For additional diagnostic information, refer to the Service Manual.

WARNING

UNIT DAMAGE HAZARD

Failure to follow this caution may result in equipment damage or improper operation.

Never use the system compressor as a vacuum pump.

Refrigerant tubes and indoor coil should be evacuated using the recommended deep vacuum method of 500 microns.

FINAL TUBING CHECK

IMPORTANT: Ensure certain factory tubing on the indoor unit has not shifted during shipment. Ensure tubes are not rubbing against each other or any sheet metal. Pay close attention to feeder tubes. Ensure the wire ties on feeder tubes are secure and tight.

DRAIN CONNECTIONS

Connect the drain line. The drain line must not have a trap anywhere in its length, must pitch downwards, and must be insulated up to the outside wall (see Fig. 19). By default, the drain hose is attached to the left-hand side of unit (when facing the back of the unit). However, the drain hose can also be attached to the right-hand side.

a. To ensure proper drainage, attach the drain hose on the same side that your refrigerant piping exits the unit.

b. Attach a drain hose extension (purchased separately) to the end of drain hose.

c. Wrap the connection point firmly with Teflon tape to ensure a good seal and to prevent leaks.

d. For the portion of the drain hose that remains indoors, wrap it with foam pipe insulation to prevent condensation.

e. Remove the air filter and pour a small amount of water into the drain pan to ensure that water flows from the unit smoothly.

Plug the Unused Drain Hole

To prevent unwanted leaks, plug the unused drain hole with the rubber plug provided.

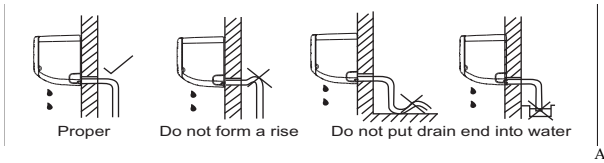

A220659

Fig. 24 —Proper Drain Hose Installation

NOTE: For proper orientation of the refrigerant piping, electrical cable and drain lines, refer to Fig. 24.

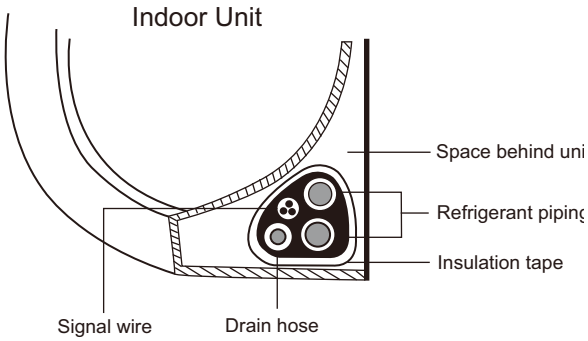

A220660

Fig. 25 —Bundle drain hose, refrigerant pipes, and signal cable

NOTE: For applications where gravity cannot be used for drainage, a condensate pump accessory is available. Consult the condensate pump's Installation Instructions for details.

WIRELESS REMOTE CONTROL INSTALLATION

Mounting Bracket (if installed on the wall)

11. Use the two screws supplied with the wireless remote control to attach the mounting bracket to the wall in a location selected by the customer and within operating range.
12. Install the batteries in the remote control.
13. Place the remote control into the remote control mounting bracket.

NOTE: For remote control operation, refer to the unit Owner's Manual.

WIRED REMOTE CONTROL INSTALLATION (18K)

For setup instructions, refer to the wired control installation manual.

1. Use the Multi-Function Board mounted on the front panel.

A220661

Fig. 26 —Multi-Function Board

2. Disassemble the Multi-Function Board.

A220662

Fig. 27 —Multi-Function Board

3. Open the Multi-Function Board to make the wiring connection.

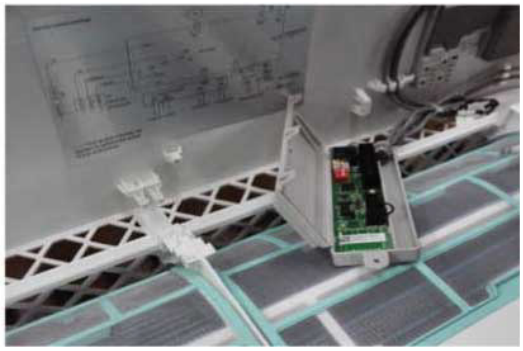

A220663

Fig. 28 —Multi-Function Board

4. Cut the female plug from the cable supplied with the wired remote control and strip the wires to connect to the Multi-Function board.

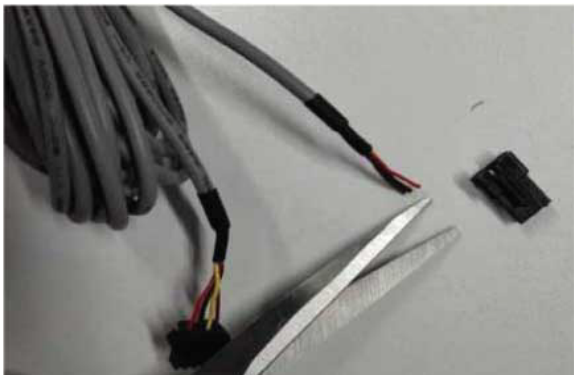

A220664

Fig. 29 —Cut the female plug and strip the wires

5. Connect the wired remote controller cable to the Multi-Function Board using:
   a. X—Brown
   b. (2.) Y—Yellow
   c. (3.) E—Black (ground)
   d. (4.) 5V—Red (power)

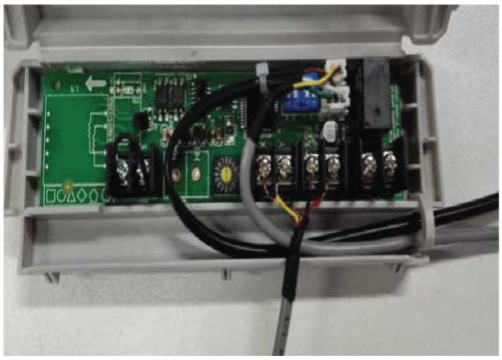

A220665

Fig. 30 —Connect the cable to the board

6. Re-install the Multi-Function Board on the bracket located on the front panel.

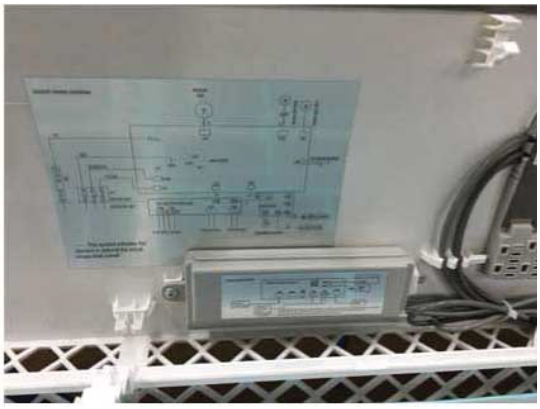

A220666

Fig. 31 —Install the Multi-Function Board

OPTIONAL WIRED WALL MOUNTED REMOTE CONTROL INSTALLATION

The wired remote control comes with the following items:

- A set of installation instructions and owner's manuals
- 3 M4X20 Screws to mount on the wall
- 4 wall plugs to mount on the wall
- 2 M4X25 to mount on the switch box
- 2 plastic screw bars to fix on the switch box
- 1 set of batteries
- 1 set of connecting wires to connect to the indoor unit's main board

A220667

Fig. 32 —Wired Controller

To connect the wired remote control to the indoor units, connect to the 4-pin connector located on the display board.

To connect the wired remote control to the indoor units:

1. Replace the display board that was shipped with the kit.
2. Install the adapter board (shipped with the kit).
3. Connect the adapter board to the new display board. Follow the instructions in the wired control installation instructions for more details.
4. Connect the female molex plug on the adapter board to the male molex plug from the extension cable shipped with the kit.
5. Connect the extension cable to the wired control.

For setup instructions, refer to the control installation manual.

START-UP

Test Operation (9/12K)

Perform a test operation after completing gas leak and electrical safety check (see Fig. 33).

1. Push **"ON/OFF"** on the remote control to begin testing.

NOTE: A protection feature prevents air conditioner from being activated for approximately 3 to 4 minutes.

2. Push **MODE**, select **COOLING**, **HEATING**, **FAN** mode to check that all functions work correctly.
3. To run the test using the **MANUAL** button in the indoor unit:
   a. Open the front panel of the indoor unit;
   b. Push the manual switch once to energize the unit. The set conditions of the manual operation are as follows:
      · Preset set point: 76°F (24°C)
      · Fan speed: **AUTO**
      · Discharge air direction: Pre-set position based on operation in "**COOL**" or "**HEAT**" mode.

NOTE: Be sure to set manual switch to "OFF" (by pushing it twice again) after finishing the test operation.

NOTE: If the ambient temperature is below 63°F (17°C). The remote controller can not be used to turn on the COOL function when the ambient temperature is below 63°F (17°C). In this instance, MANUAL CONTROL can be used to test the COOL function.

1. **MANUAL CONTROL** is located on the right-hand side of the display box located on the front panel of the indoor unit (see Fig. 33). Press **MANUAL CONTROL** two times to select the **COOL** function. Perform a **Test Run** as normal.

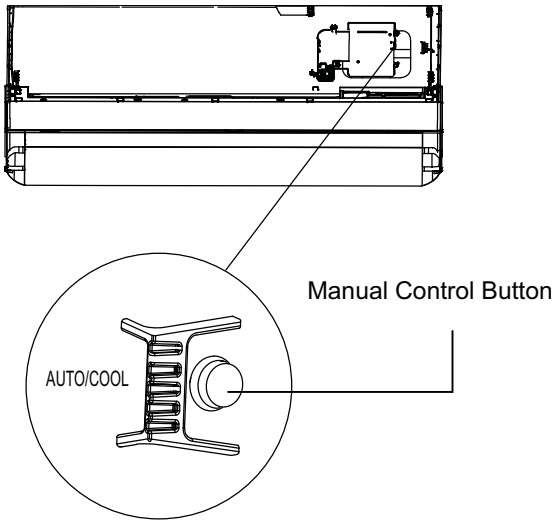

A220668

Fig. 33 —Test Operation

Test Operation (18K)

Perform a test operation after completing a gas leak and electrical safety check (see Fig. 34).

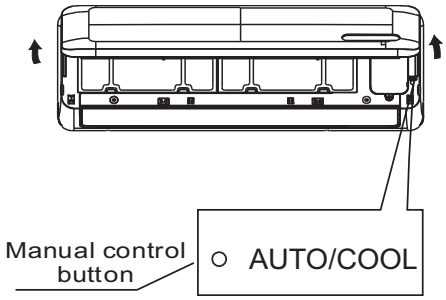

A220669

Fig. 34 — Test Operation

1. Push **ON/OFF** on the remote control to begin testing.

NOTE: A protection feature prevents the air conditioner from activating for approximately 3 to 4 minutes.

2. Push **MODE**, select **COOLING**, **HEATING**, **FAN** mode to check that all functions work correctly.
3. To run the test, press **MANUAL** on the indoor unit:
   a. Open the indoor unit's front panel.
   b. Push **MANUAL** once to energize the unit. The set conditions for manual operations are as follows:
      • Preset set point: 76°F (24°C)
      • Fan speed: **AUTO**
      • Discharge Air Direction: Pre-set position based on operation in the **COOL** or **HEAT** mode.
4. Set **MANUAL** to **OFF** by pushing it twice again after completing the **TEST** operation.

SYSTEM CHECKS

1. Conceal the tubing where possible.
2. Ensure the drain tube slopes downward along its entire length.
3. Ensure all tubing and connections are properly insulated.
4. Fasten the tubes to the outside wall, when possible.
5. Seal the hole through which the cables and tubing pass.

INDOOR UNIT

1. Do all remote control buttons function properly?
2. Do the display panel lights work properly?
3. Does the air deflection louver function properly?
4. Does the drain work?

Explain the Following Items To the Customer (use the Owner's Manual):

1. How to turn air conditioner on and off;
   a. select **COOLING**, **HEATING** and other operating modes;
   b. set a desired temperature;
   c. set the timer to automatically start and stop air conditioner operation;
   d. all other features of the remote control and display panel.
2. How to remove and clean the air filter.
3. How to set air deflection louver.
4. Explain care and maintenance.
5. Present the Owner's Manual and Installation Instructions to customer.

Manufacturer reserves the right to change, at any time, specifications and designs without notice and without obligations.

TROUBLESHOOTING

For ease of service, the systems are equipped with diagnostic code display LEDs on both the indoor and outdoor units. The indoor diagnostic display is a combination of flashing LEDs on the display panel or the front of the unit. Some indoor units display error codes specifying failure modes in outdoor units. If possible, always check the diagnostic codes displayed on the indoor unit first. The diagnostic codes displayed in the indoor and outdoor units are listed in Table 8.

INDOOR UNIT DIAGNOSTIC GUIDES (9K-18K)

Table 8 — Unit Diagnostic Guides

DISPLAY	DESCRIPTION
dF	Defrost
SC	Self clean
CL	Filter cleaning reminder
CL	Active Clean (*model dependent)
nF	Filter replacement reminder
FP	Heating in room temperature under 8°C
FC	Forced cooling
AP	AP mode of WIFI connection
CP	Remote switched off
LL	Remote or Wire controller Lock
On	Time On
Off	Time Off
E-C-O	ECO mode
SD	Power abnormal detection
d1	Receive DR1 signal
d2	Receive DR2 signal
d3	Receive DR3 signal
dE	DR input error signal
FH OP	AP mode is activated / no WIFI kit installed
FH Od	See outdoor unit for Error Code information
EH/EC/EL/PC	See outdoor unit for Error Code information

For additional diagnostic information, refer to the service manual.

DUCTLESS START-UP CHECKLIST - Single Zone

Installation Data

Site Address:_____

City:_____ **State:**_____ **Zip Code:**_____

Installing Contractor:_____ **Contractor Contact #:** ( ) _____-_____

Job Name:_____ **Start-up Date:**_____

Distributor:_____

System Details

UNITS	MODEL NO.	SERIAL NO.	CONTROLLER
OUTDOOR UNIT			
INDOOR UNIT A			

Are the outdoor unit and indoor unit compatible? YES:_____ NO:_____

Wiring Electrical

Wire Size and Type Used? AWG:_____ TYPE:_____

Are there any breaks, splices, wire nuts or butt connectors between the outdoor unit and the indoor unit? YES:_____ NO:_____

Was the wiring from the outdoor unit port to the correct indoor unit verified? YES:_____ NO:_____

REMARKS:_____

_____

Voltage Check

Wiring: Single Zone

Outdoor Unit Disconnect	1(L1):GND		Outdoor Unit Terminal Block	1(L1):GND		**NOTES:**_____
	2(L2):GND			2(L2):GND		
	1(L1):L2(2)			1(L1):2(L2)		
Indoor Unit Voltage Check @ Outdoor Unit	1(L1):GND		Indoor Unit Voltage Check @ Indoor Unit	1(L1):GND		**NOTES:**_____
	2(L2):GND			2(L2):GND		
	1(L1):2(L2)			1(L1):2(L2)		
	2(L2):3(S)			2(L2):3(S)		

Outdoor Unit Disconnect	1(L1):GND		Outdoor Unit Terminal Block	1(L1):GND		**NOTES:**_____
	2(L2):GND			2(L2):GND		
	1(L1):L2(2)			1(L1):2(L2)		
Indoor Unit Voltage Check @ Outdoor Unit	1(L1):GND		Indoor Unit Voltage Check @ Indoor Unit	1(L1):GND		**NOTES:**_____
	2(L2):GND			2(L2):GND		
	1(L1):2(L2)			1(L1):2(L2)		
	2(L2):3(S)			2(L2):3(S)		

Manufacturer reserves the right to change, at any time, specifications and designs without notice and without obligations.

Ductless Start-Up Checklist (CONT)

Piping

Leak Check:
System held 500 psig (max. 550psi) for a minimum of 30 minutes using dry nitrogen. YES:_____ NO:_____

Evacuation Method:
- Was the Triple Evacuation Method used as outlined in the installation manual? YES:_____ NO:_____
- Was the Deep Vacuum Method used as outlined in the installation manual? YES:_____ NO:_____
- Did the System Hold 500 microns for 1 hour? YES:_____ NO:_____
- Does the line set match the diameter of the evaporator connections? YES:_____ NO:_____
- For Conventional Fan Coils, does the line set match the outdoor unit size? YES:_____ NO:_____

Single Zone Piping:
Has the liquid pipe length been measured and the additional charge calculated? Size:_____ Length:_____ Charge:_____

NOTES:

PORT	LIQUID SIZE		SUCTION SIZE		LENGTH	CHARGE
A						

NOTES:_____

Performance Check

For 1:1 Single Zone Systems: Adjust the set-point to create an operational call for the desired testing operation. Allow the system to run for a minimum of 10 min. and record the following details:

(Operational data recorded on applicable heads with the wireless remote controller's Point Check function)

UNIT	SET-POINT	MODE	T1	T2	T3	T4	Tb	Tp	Th	LA/Lr
A										

NOTE:
- T1 - Ambient Space Temperature Sensor
- T2 - IDU Coil Temperature Sensor
- T3 - Outdoor Coil Temperature Sensor
- T4 - Outdoor Ambient Temperature
- Tb - Suction Line Temperature @PMV
- Tp - Discharge Temperature Sensor
- Th - IPM Board Temperature
- LA/Lr - PMV Position

Error Codes

Were there any error codes present at start-up? YES:_____ NO:_____

		Notes:
Indoor Unit Error Code:		
Outdoor Unit Error Code:		
Wall Controller:		
24V Interface:		

Comments:

_____

_____

_____

© 2022 Carrier. All rights reserved.
Edition Date: 03/22 **Catalog No: 40MPHB-01SI**
Replaces: NEW

Manufacturer reserves the right to change, at any time, specifications and designs without notice and without obligations.