Multipoise Crossover Air Handler

Indoor Model: 45MUAAQ18XX3

bryant
Heating & Cooling Systems

Job Data:

Tag #:

Date:

Location:

Carrier#:

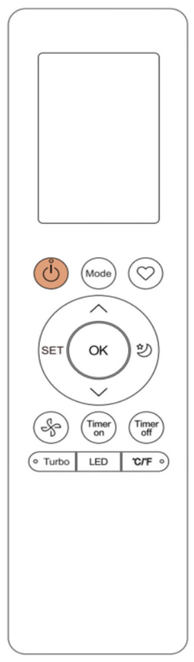

INDOOR STANDARD FEATURES

- Modes: Cool, Heat, Dry, Fan, Auto
- Factory installed leak detection system
- Conventional Lineset
- Built-In 24V Interface
- Dual Voltage (115V/230V)
- Constant Air Motor/Blower
- Quiet indoor operation
- Anti-corrosive fin coating

RESIDENTIAL APPLICATION LIMITED WARRANTY*

- Ten (10) years if properly registered within ninety (90) days after original installation, parts are warranted to the original purchaser for a period of ten (10) years. Otherwise, parts warranty is five (5) years.

NOTE: Images for illustration purposes only. Actual models may be slightly different.

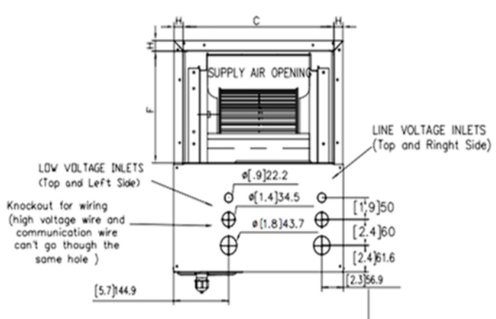

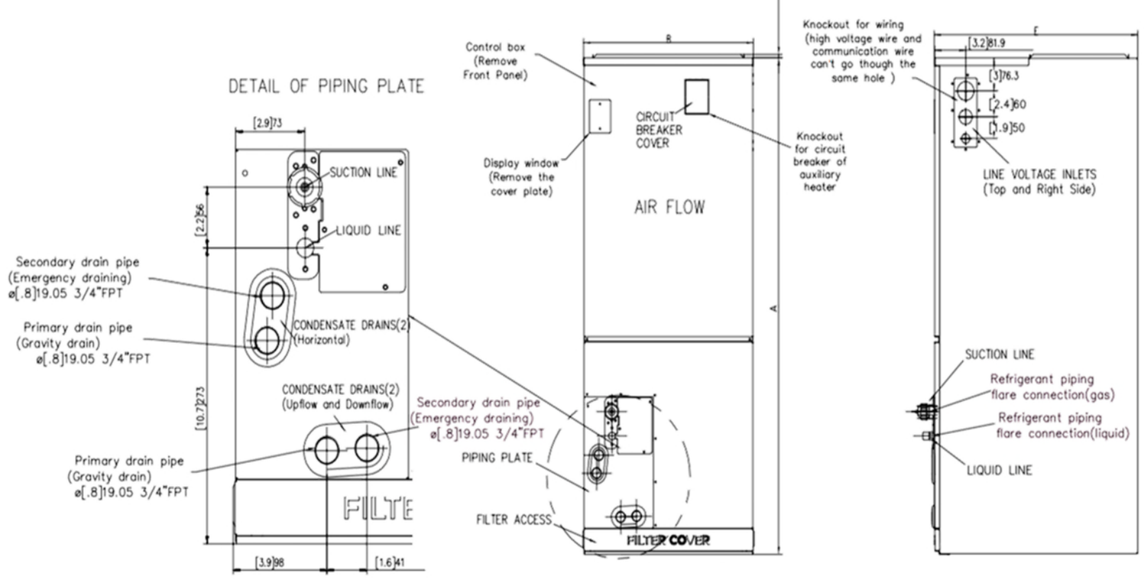

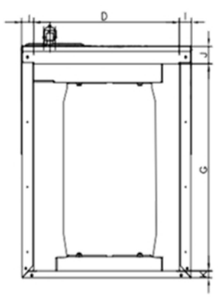

45MUAAQ18XX3			
System	**Indoor Model #**		45MUAAQ18XX3
	Indoor Size		18000
Electrical	Voltage, Phase, Cycle	V/Ph/Hz	115-208-230/1/60
	Power Supply	Indoor unit powered separate from outdoor unit	
	MCA	A.	4
Piping	Pipe Connection Size - Liquid	in (mm)	3/8(9.52)
	Pipe Connection Size - Suction	in (mm)	3/4(19)
Operating Range	Cooling Indoor DB Min - Max	°F(°C)	60~90(16～32)
	Heating Indoor DB Min - Max	°F(°C)	32~86(0～30)
Indoor Coil	Face Area	Sq. Ft.	3
	No. Rows		3
	Fins per inch		20
	Circuits		6
Indoor Unit	Number of Fan Speeds		550/510/450
	Airflow (highest to lowest)	CFM	618.03~488.54
	Sound Pressure	dB(A)	33
Dimensions	Height	in (mm)	45.00(1143)
	Width	in (mm)	17.52(445)
	Depth	in (mm)	21.02(534)
	Net Weight	lbs (kg)	105.82(48)
	Shipping Height	in (mm)	48.23(1225)
	Shipping Width	in (mm)	21.06(535)
	Shipping Depth	in (mm)	21.20(640)
	Shipping Net Weight	lbs (kg)	126.76(57.5)
CONTROLS			
Standard	Wireless Remote Controller (°F/°C Convertible)		
Optional	Wired Remote Control 7 Day Programmable		KSACN1401AAA

		18K/24K		30K/36K		48K/60K	
	Dimensions	inch	mm	inch	mm	inch	mm
A	Model Height	45	1143	49	1245	53	1346
B	Model Width	17.5	445	21	534	24.5	622
C	Supply Air Opening Width	15.6	397	19.1	486	22.6	575
D	Return Air Opening Width	15.1	384	18.6	473	22.1	562
E	Model Depth	21	534	21	534	21	534
F	Supply Air Opening Depth	10.3	260	10.3	260	10.3	260
G	Return Air Opening Depth	18.8	476	18.8	476	18.8	476
H	Supply Air Opening Clearance	0.9	24	0.9	24	0.9	24
I	Return Air Opening Side Clearance	1.3	32	1.3	32	1.1	28
J	Return Air Opening Front Clearance	1.5	38	1.6	41	1.6	41
K	Return Air Opening Back Clearance	0.6	16	0.6	16	0.8	19
	Refrigerant Piping Flare Connection (Gas)	3/4	19	3/4	19	3/4	19
	Refrigerant Piping Flare Connection (Liquid)	3/8	9.52	3/8	9.52	3/8	9.52

AHRI CERTIFIED™ www.ahridirectory.org
Unitary Small HP
AHRI Standard 210/240
Certification applies only when the complete system is listed with AHRI.

C US

Puron Advance™

CAC/BDP Copyright 2024 • Atlanta, GA, 30339
SUBJECT TO CHANGE WITHOUT NOTICE