48VLU (E, F) Ultra Low NOx Comfort 14 SEER Single-Packaged Air Conditioner and Gas Furnace System with Puron® (R-410A) Refrigerant Single Phase 2-5 Nominal Tons (Sizes 24-60) Three Phase 3-5 Nominal Tons (Sizes 36-60)

Carrier®

Turn to the experts

Installation Instructions

IMPORTANT: Effective January 1, 2015, all split system and packaged air conditioners must be installed pursuant to applicable regional efficiency standards issued by the Department of Energy.

NOTE: Read the entire instruction manual before starting the installation.

NOTE: Installer: Make sure the Owner's Manual and Service Instructions are left with the unit after installation.

Table of Contents

Safety Considerations 1
Introduction. 2
Receiving and Installation 2
Pre-start-up 13
Start-up 13
Maintenance 28
Troubleshooting 32
Start-up Checklist 32

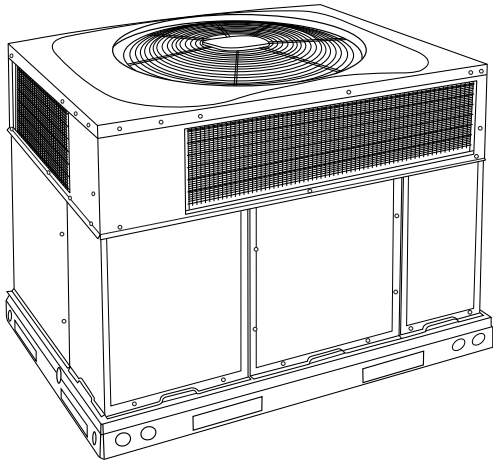

A170030

Fig. 1 – Unit 48VL

Safety Considerations

Improper installation, adjustment, alteration, service maintenance, or use can cause explosion, fire, electrical shock, or other conditions which may cause death, personal injury, or property damage. Consult a qualified installer, service agency, or your distributor or branch for information or assistance. The qualified installer or agency must use factory-authorized kits or accessories when modifying this product. Refer to the individual instructions packaged with the kits or accessories when installing.

Follow all safety codes. Wear safety glasses, protective clothing, and work gloves. Have a fire extinguisher available. Read these instructions thoroughly and follow all warnings or cautions included in literature and attached to the unit. consult local building codes, the current editions of the National Fuel Gas Code (NFGC) NFPA 54/ANSI Z223.1, and the National Electrical Code (NEC) NFPA 70.

In Canada refer to the current editions of the National Standards of Canada CAN/CSA-B149.1 and .2 Natural Gas and Propane Installation codes, and Canadian Electrical Code CSA C22.1

Recognize safety information. This is the safety-alert symbol ⚠. When you see this symbol on the unit and in instructions or manuals, be alert to the potential for personal injury. Understand these signal words: DANGER, WARNING, and CAUTION. These words are used with the safety-alert symbol. DANGER identifies the most serious hazards which will result in severe personal injury or death. WARNING signifies hazards which could result in personal injury or death. CAUTION is used to identify unsafe practices which may result in minor personal injury or product and property damage. NOTE is used to highlight suggestions which will result in enhanced installation, reliability, or operation.

⚠ WARNING

CARBON MONOXIDE POISONING HAZARD

Failure to follow this warning could result in personal injury and/or death.

Carbon Monoxide (CO) is a colorless, odorless, and tasteless poisonous gas that can be fatal when inhaled. Follow all installation, maintenance, and service instructions. See additional information below regarding the installation of a CO Alarm.

Most states in the USA and jurisdictions in Canada have laws that require the use of Carbon Monoxide (CO) alarms with fuel burning products. Examples of fuel burning products are furnaces, boilers, space heaters, generators, water heaters, stoves/ranges, clothes dryers, fireplaces, incinerators, automobiles, and other internal combustion engines. Even if there are no laws in your jurisdiction requiring a CO Alarm, it's highly recommended that whenever any fuel burning product is used in or around the home or business that the dwelling be equipped with a CO Alarm(s). The Consumer Product Safety Commission recommends the use of CO Alarm(s). The CO Alarm(s) must be installed, operated, and maintained according to the CO Alarm manufacturer's instructions. For more information about Carbon Monoxide, local laws, or to purchase a CO Alarm only, please visit the following website https://www.kidde.com

⚠ CAUTION

ELECTRICAL SHOCK HAZARD

Failure to follow this warning could result in personal injury or death.

Before installing or servicing system, always turn off main power to system and install lockout tag. There may be more than one disconnect switch. Turn off accessory heater power switch if applicable.

⚠ CAUTION

FIRE, EXPLOSION, ELECTRICAL SHOCK AND CARBON MONOXIDE POISONING HAZARD

Failure to follow this warning could result in personal injury or unit damage.

A qualified installer or agency must use only factory-authorized kits or accessories when modifying this product.

⚠ WARNING

PERSONAL INJURY AND PROPERTY DAMAGE HAZARD

For continued performance, reliability, and safety, the only approved accessories and replacement parts are those specified by the equipment manufacturer. The use of non-manufacturer approved parts and accessories could invalidate the equipment limited warranty and result in fire risk, equipment malfunction, and failure. Please review manufacturer's instructions and replacement part catalogs available from your equipment supplier.

Introduction

This unit (see Fig. 1) is a fully self-contained, combination Category I gas heating/electric cooling unit designed for outdoor installation (See Fig. 3 and Fig. 4 for unit dimensions). All unit sizes have return and discharge openings for both horizontal and downflow configurations, and are factory shipped with all downflow duct openings covered. Units may be installed either on a rooftop or on a cement slab. (See Fig. 5 for roof curb dimensions).

In gas heating mode, this unit is designed for a minimum continuous return-air temperature of 55°F (13°C) db and a maximum continuous return-air temperature of 80°F (27°C) db. Failure to follow these return-air temperature limits may affect reliability of heat exchangers, motors, and other components.

Models with a “U” in the 5th position of the model number are dedicated to the Ultra Low NOx emissions requirements of 14 nonograms/joule and must be installed in applicable California Air Quality Management Districts or any other regions in North America where Ultra Low NOx rule exists.

⚠ NOTICE

If the unit gasketing or insulation must be replaced, ensure the material used is compliant with the two agency requirements listed.

1. Insulation and adhesives shall meet NFPA 90.1 requirements for flame spread and smoke generation.
2. Cabinet insulation shall meet ASHRAE Standard 62.2.

Receiving and Installation

Step 1 – Check Equipment

Identify Unit

The unit model number and serial number are stamped on the unit information plate. Check this information against shipping papers.

Inspect Shipment

Inspect for shipping damage before removing packaging materials. If unit appears to be damaged or is torn loose from its anchorage, have it examined by transportation inspectors before removal. Forward claim papers directly to transportation company. Manufacturer is not responsible for any damage incurred in transit. Check all items against shipping list. Immediately notify the nearest equipment distribution office if any item is missing. To prevent loss or damage, leave all parts in original packages until installation.

If the unit is to be mounted on a curb in a downflow application, review Step 9 to determine which method is to be used to remove the downflow panels before rigging and lifting into place. The panel removal process may require the unit to be on the ground.

Step 2 – Provide Unit Support

For hurricane tie downs, contact distributor for details and PE (Professional Engineering) Certificate if required.

Roof Curb

Install accessory roof curb in accordance with instructions shipped with curb (See Fig. 5). Install insulation, cant strips, roofing, and flashing. Ductwork must be attached to curb.

IMPORTANT: The gasketing of the unit to the roof curb is critical for a water tight seal. Install gasketing material supplied with the roof curb. Improperly applied gasketing also can result in air leaks and poor unit performance.

Curb should be level to within 1/4 in. (6 mm). This is necessary for unit drain to function properly. Refer to accessory roof curb installation instructions for additional information as required.

Installation on older “G” series roof curbs.

Two accessory kits are available to aid in installing a new “G” series unit on an old “G” roof curb.

1. Accessory kit number CPADCURB001A00, (small chassis) and accessory kit number CPADCURB002A00, (large chassis) includes roof curb adapter and gaskets for the perimeter seal and duct openings. No additional modifications to the curb are required when using this kit.
2. An alternative to the adapter curb is to modify the existing curb by removing the outer horizontal flange and use accessory kit number CPGSKTKIT001A00 which includes spacer blocks (for easy alignment to existing curb) and gaskets for the perimeter seal and duct openings. This kit is used when existing curb is modified by removing outer horizontal flange.

⚠ CAUTION

UNITS/STRUCTURAL DAMAGE HAZARD

Failure to follow this caution may result in property damage.

Ensure there is sufficient clearance for saw blade when cutting the outer horizontal flange of the roof curb so there is no damage to the roof or flashing.

Slab Mount

Place the unit on a solid, level pad that is at least 2 in. (51 mm) above grade. The pad should extend approximately 2 in. (51 mm) beyond the casing on all 4 sides of the unit. (See Fig. 2.) Do not secure the unit to the pad except when required by local codes.

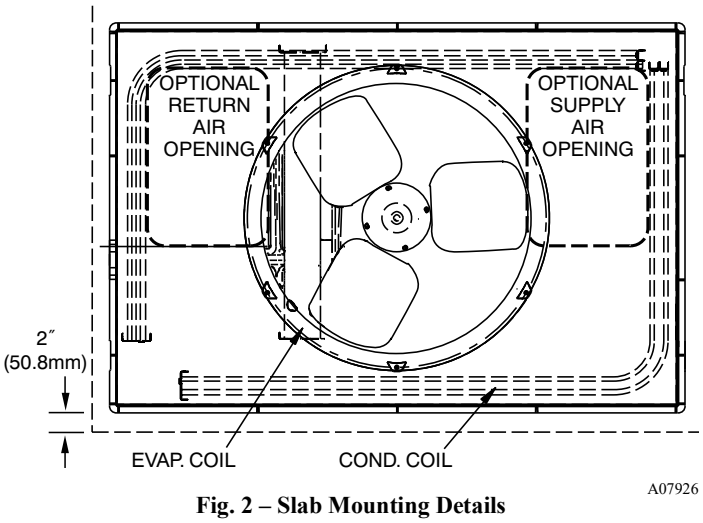

Fig. 2 – Slab Mounting Details

Step 3 – Field Fabricate Ductwork

Secure all ducts to roof curb and building structure on vertical discharge units. Do not connect ductwork to unit. For horizontal applications, unit is provided with flanges on the horizontal openings. All ductwork should be secured to the flanges. Insulate and weatherproof all external ductwork, joints, and roof openings with counter flashing and mastic in accordance with applicable codes.

Ducts passing through an unconditioned space must be insulated and covered with a vapor barrier.

If a plenum return is used on a vertical unit, the return should be ducted through the roof deck to comply with applicable fire codes.

Read unit rating plate for any required clearances around ductwork. Cabinet return-air static shall not exceed -.25 IN. W.C.

Step 4 – Provide Clearances

IMPORTANT: The unit must be secured to the curb by installing screws through the bottom of the curb flange and into the unit base rails. When installing large base units onto the common curb, the screws must be installed before allowing the full weight of the unit to rest on the curb. A minimum of six screws are required for large base units. Failure to secure unit properly could result in an unstable unit. See Warning near Rigging/Lifting information and accessory curb instructions for more details.

The required minimum operating and service clearances are shown in Fig. 3 and Fig. 4. Adequate combustion, ventilation and condenser air must be provided.

IMPORTANT: Do not restrict outdoor airflow. An air restriction at either the outdoor-air inlet or the fan discharge may be detrimental to compressor life.

The condenser fan pulls air through the condenser coil and discharges it through the top grille. Be sure that the fan discharge does not recirculate to the condenser coil. Do not locate the unit in either a corner or under an overhead obstruction. The minimum clearance under a partial overhang (such as a normal house overhang) is 48-in. (1219 mm) above the unit top. The maximum horizontal extension of a partial overhang must not exceed 48-in. (1219 mm).

Do not place the unit where water, ice, or snow from an overhang or roof will damage or flood the unit. Do not install the unit on carpeting or other combustible materials. Slab-mounted units should be at least 2 in. (51 mm) above the highest expected water and runoff levels. Do not use unit if it has been under water.

Step 5 – Rig and Place Unit

Rigging and handling of this equipment can be hazardous for many reasons due to the installation location (roofs, elevated structures, etc.).

Only trained, qualified crane operators and ground support staff should handle and install this equipment.

When working with this equipment, observe precautions in the literature, on tags, stickers, and labels attached to the equipment, and any other safety precautions that might apply.

Training for operators of the lifting equipment should include, but not be limited to, the following:

1. Application of the lifter to the load, and adjustment of the lifts to adapt to various sizes or kinds of loads.
2. Instruction in any special operation or precaution.
3. Condition of the load as it relates to operation of the lifting kit, such as balance, temperature, etc.

Follow all applicable safety codes. Wear safety shoes and work gloves.

Inspection

Prior to initial use, and at monthly intervals, all rigging shackles, clevis pins, and straps should be visually inspected for any damage, evidence of wear, structural deformation, or cracks. Particular attention should be paid to excessive wear at hoist hooking points and load support areas. Materials showing any kind of wear in these areas must not be used and should be discarded.

⚠ WARNING

UNIT FALLING HAZARD

Failure to follow this warning could result in personal injury or death.

Never stand beneath rigged units or lift over people.

⚠ WARNING

PROPERTY DAMAGE HAZARD

Failure to follow this warning could result in personal injury/death or property damage.

When straps are taut, the clevis should be a minimum of 36 in. (914 mm) above the unit top cover.

Rigging/Lifting of Unit (See Fig. 6)

⚠ WARNING

UNIT FALLING HAZARD

Failure to follow this warning could result in personal injury or death.

Large base units must be secured to common curb before allowing full weight of unit to rest on curb. Install screws through curb into unit base rails while rigging crane is still supporting unit.

Lifting holes are provided in base rails as shown in Fig. 3 and Fig. 4.

1. Leave top shipping skid on the unit for use as a spreader bar to prevent the rigging straps from damaging the unit. If the skid is not available, use a spreader bar of sufficient length to protect the unit from damage.
2. Attach shackles, clevis pins, and straps to the base rails of the unit. Be sure materials are rated to hold the weight of the unit (See Fig. 6).
3. Attach a clevis of sufficient strength in the middle of the straps. Adjust the clevis location to ensure unit is lifted level with the ground.

After the unit is placed on the roof curb or mounting pad, remove the top skid.

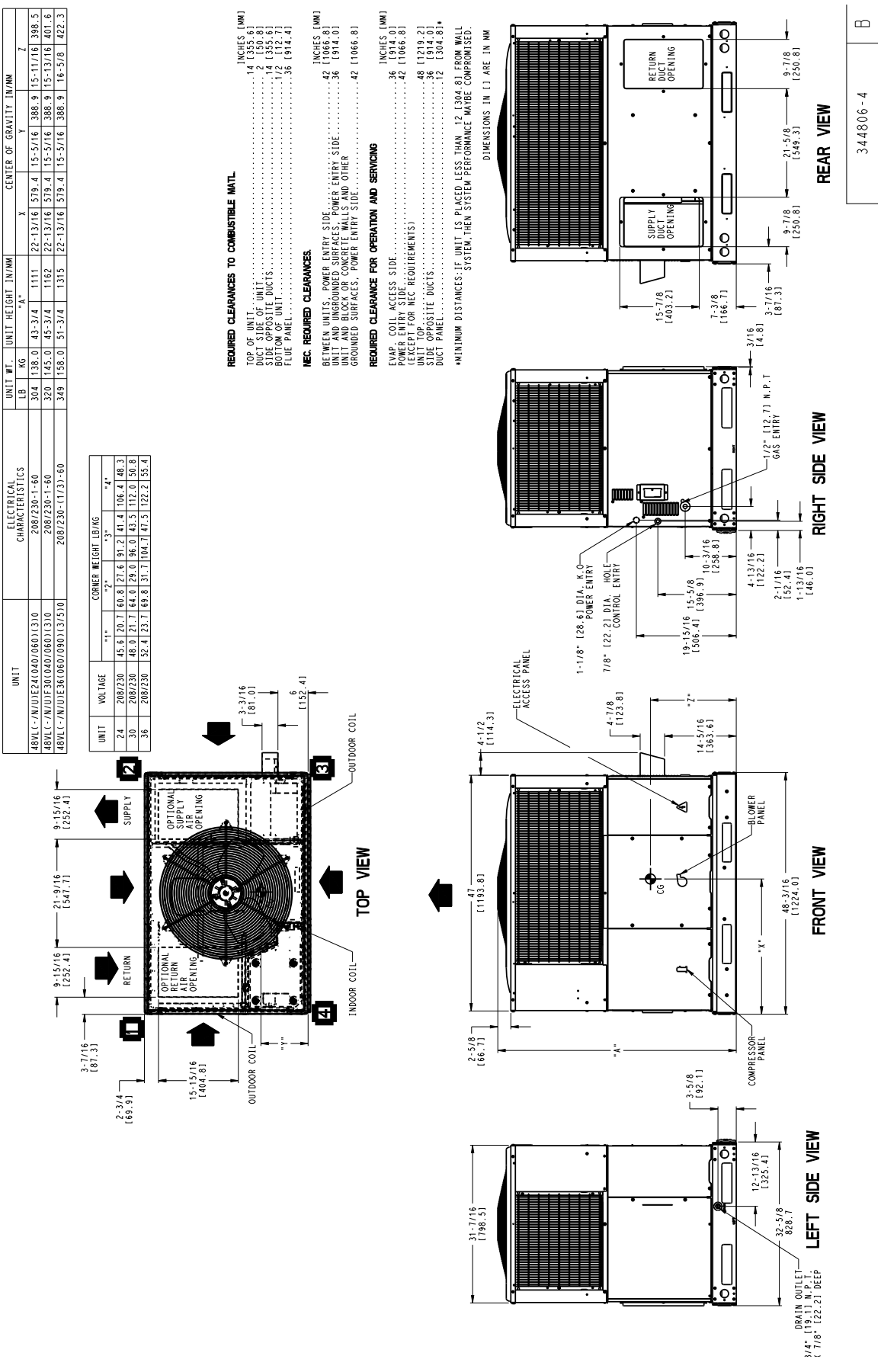

Fig. 3 – 24-36 Unit Dimensions

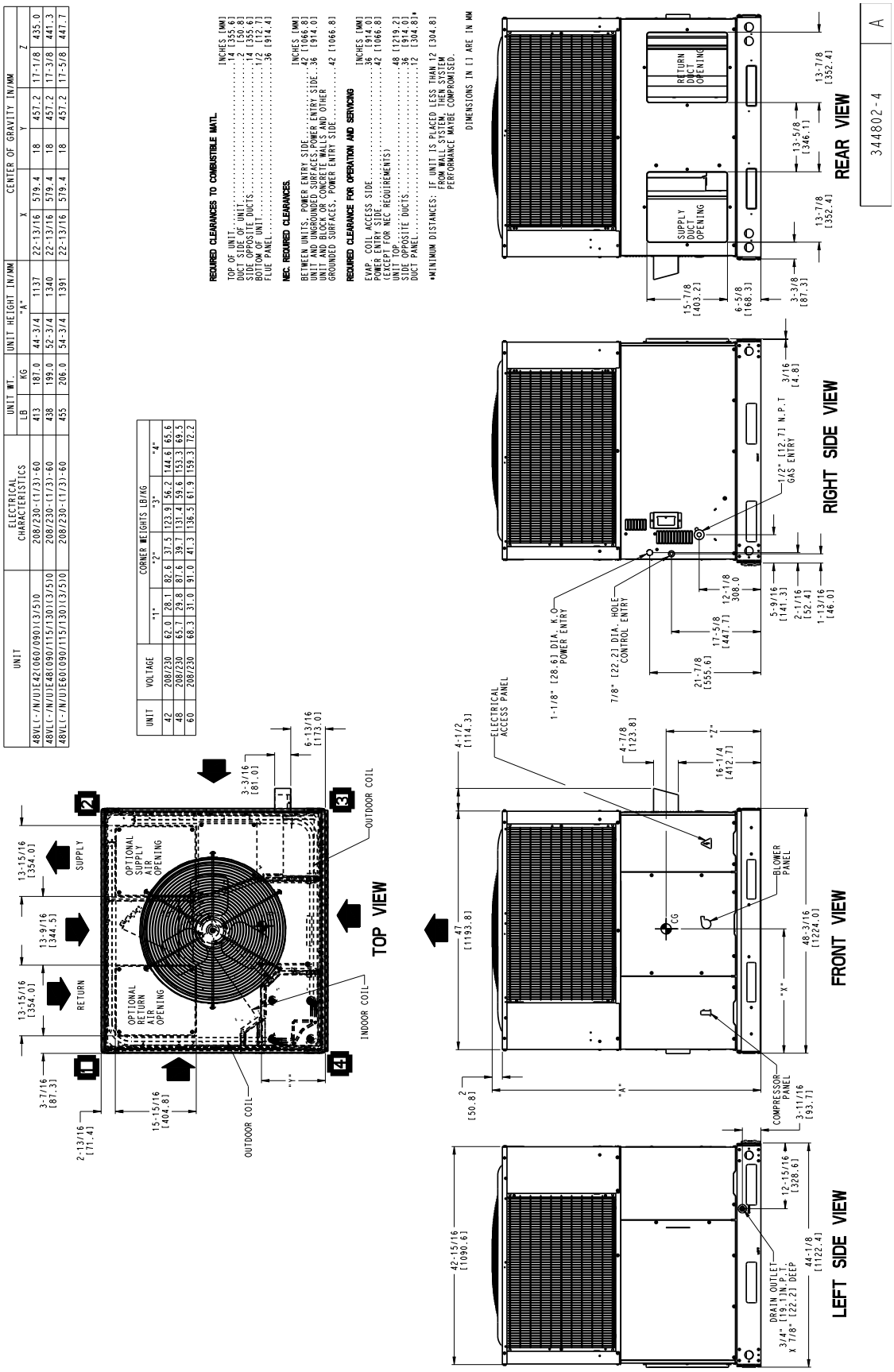

UNIT	ELECTRICAL CHARACTERISTICS	UNIT WT. LB	UNIT WT. KG	UNIT HEIGHT IN/MM "A"	CENTER OF GRAVITY IN/MM X	Y	Z
48VL(-/N/U)E42(060/090)(3/5)0	208/230-(1/3)-60	413	187.0	44-3/4 1137	22-13/16 579.4	18 457.2	17-1/8 435.0
48VL(-/N/U)E48(090/115/130)(3/5)0	208/230-(1/3)-60	438	199.0	52-3/4 1340	22-13/16 579.4	18 457.2	17-3/8 441.3
48VL(-/N/U)E60(090/115/130)(3/5)0	208/230-(1/3)-60	455	206.0	54-3/4 1391	22-13/16 579.4	18 457.2	17-5/8 447.7

UNIT	VOLTAGE	CORNER WEIGHTS LB/KG "1"	"2"	"3"	"4"
42	208/230	62.0 28.1	82.6 37.5	123.9 56.2	144.6 65.6
48	208/230	65.7 29.8	87.6 39.7	131.4 59.6	153.3 69.5
60	208/230	68.3 31.0	91.0 41.3	136.5 61.9	159.3 72.2

REQUIRED CLEARANCES TO COMBUSTIBLE MAT'L. INCHES [MM]

TOP OF UNIT.....14 [355.6]
DUCT SIDE OF UNIT.....2 [50.8]
SIDE OPPOSITE DUCTS.....14 [355.6]
BOTTOM OF UNIT.....1/2 [12.7]
FLUE PANEL.....36 [914.4]

NEC REQUIRED CLEARANCES.

BETWEEN UNITS, POWER ENTRY SIDE.....42 [1066.8]
UNIT AND UNGROUNDED SURFACES,POWER ENTRY SIDE. 36 [914.0]
UNIT AND BLOCK OR CONCRETE WALLS AND OTHER GROUNDED SURFACES, POWER ENTRY SIDE.....42 [1066.8]

REQUIRED CLEARANCE FOR OPERATION AND SERVICING INCHES [MM]

EVAP. COIL ACCESS SIDE.....36 [914.0]
POWER ENTRY SIDE.....42 [1066.8]
(EXCEPT FOR NEC REQUIREMENTS)
UNIT TOP.....48 [1219.2]
SIDE OPPOSITE DUCTS.....36 [914.0]
DUCT PANEL.....12 [304.8]*

*MINIMUM DISTANCES: IF UNIT IS PLACED LESS THAN 12 [304.8] FROM WALLS, SYSTEM PERFORMANCE MAYBE COMPROMISED.

DIMENSIONS IN [] ARE IN MM

A200157

Fig. 4 – 42-60 Unit Dimensions

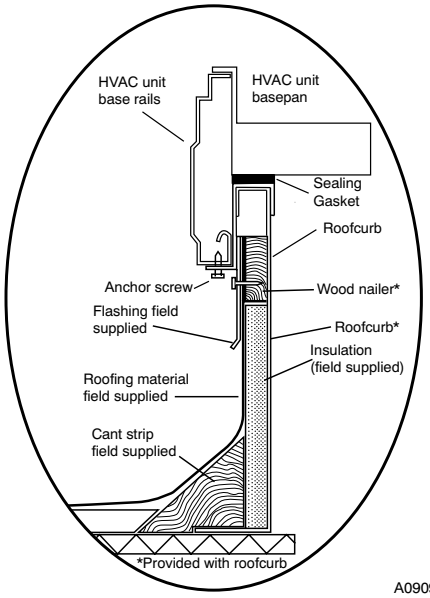

ROOF CURB DETAIL

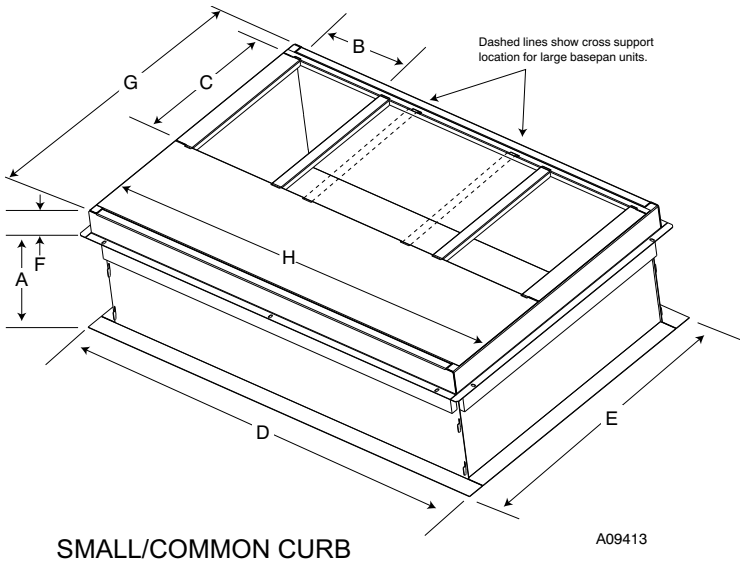

SMALL/COMMON CURB

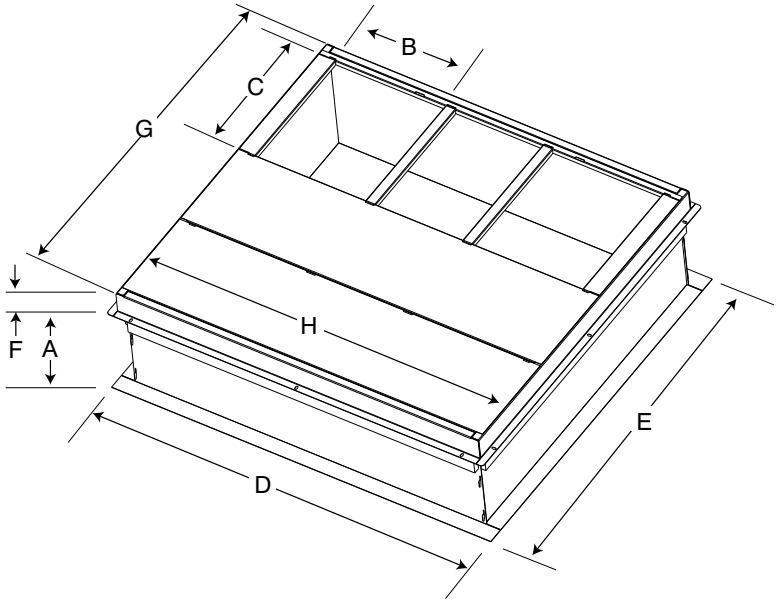

LARGE CURB

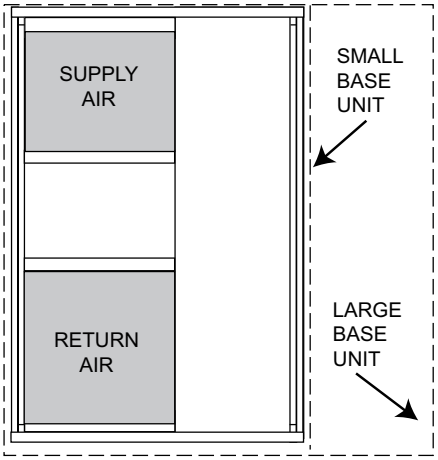

UNIT PLACEMENT ON COMMON CURB

SMALL OR LARGE BASE UNIT

A09414

UNIT SIZE	CATALOG NUMBER	A IN. (mm)	B (small / common base) IN. (mm)*	B (large base) IN. (mm)*	C IN. (mm)	D IN. (mm)	E IN. (mm)	F IN. (mm)	G IN. (mm)	H IN. (mm)
Small or Large	CPRFCURB011B00	14 (356)	10 (254)	14 (356)	16 (406)	47.8 (1214)	32.4 (822)	2.7 (69)	30.6 (778)	46.1 (1170)
Large	CPRFCURB013B00	14 (356)	14 (356)				43.9 (1116)		42.2 (1072)	

* Part Number CPRCURB011B00 can be used on both small and large basepan units. The cross supports must be located based on whether the unit is a small basepan or a large basepan.

NOTES:

1. Roof curb must be set up for unit being installed.
2. Seal strip must be applied, as required, to unit being installed.
3. Roof curb is made of 16-gauge steel.
4. Attach ductwork to curb (flanges of duct rest on curb).
5. Insulated panels: 1-in. (25.4 mm) thick fiberglass 1 lb. density.

Fig. 5 – Roof Curb Dimensions

⚠ CAUTION - NOTICE TO RIGGERS
⚠ PRUDENCE - AVIS AUX MANIPULATEUR

ACCESS PANELS MUST BE IN PLACE WHEN RIGGING.
PANNEAUX D'ACCES DOIT ÊTRE EN PLACE POUR MANIPULATION.

Use top skid as spreader bar. / Utiliser la palette du haut comme barre de répartition

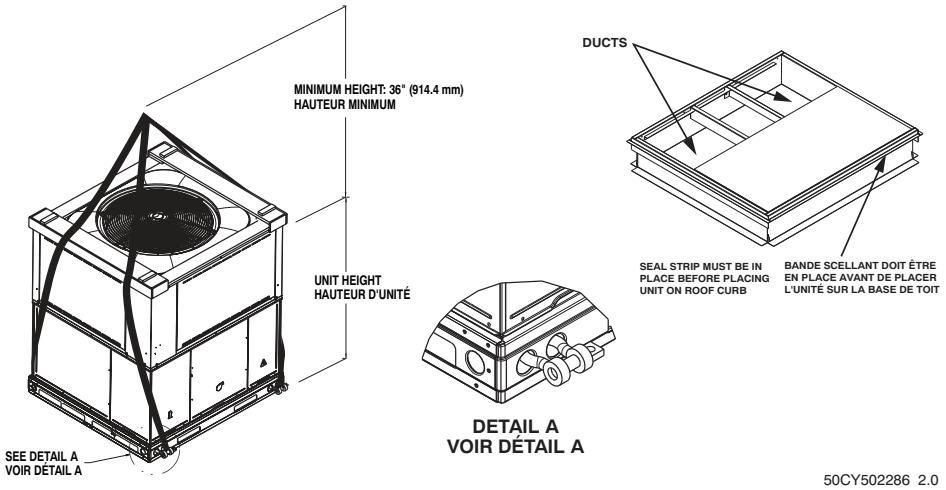

A09051

SMALL CABINET								LARGE CABINET						
Unit	24		30		36			Unit	42		48		60	
	lb	kg	lb	kg	lb	kg			lb	kg	lb	kg	lb	kg
Rigging Weight	329	149	361	164	390	177		Rigging Weight	455	206	480	218	497	225

NOTE: See dimensional drawing for corner weights.

Fig. 6 – Unit Suggested Rigging

Table 1 – Physical Data

Unit Size	24040	24060	30040	30060	36060	42060	42090	48090	60090
NOMINAL CAPACITY (ton)	2	2	2-1/2	2-1/2	3	3-1/2	3-1/2	4	5
SHIPPING WEIGHT lb.	329	329	361	361	390	455	455	480	497
SHIPPING WEIGHT (kg)	149	149	164	164	177	206	206	218	225
COMPRESSOR / QUANTITY	Rotary / 1				Scroll / 1				
REFRIGERANT (R-410A)									
Quantity lb.	5.3	5.3	6.0	6.0	8.2	6.2	6.2	9.2	9.8
Quantity (kg)	2.4	2.4	2.7	2.72	3.7	2.8	2.8	4.2	4.4
REFRIGERANT METERING DEVICE	Orifice	Orifice			TXV	Orifice			
ORIFICE ID in. / mm	.059 / 1.5	.059 / 1.5	.063 / 1.60	.061 / 1.55	N/A	.073 / 1.85		.080 / 2.03	.084 / 2.14
OUTDOOR COIL									
Rows...Fins/in.	1..21	1...21	1...21	1...21	1...21	1...21	1...21	1...21	1...21
Face Area (sq ft)	11.9	11.9	13.6	13.6	18.8	13.6	13.6	21.4	23.3
OUTDOOR FAN									
Nominal CFM	2500	2500	2700	2700	3200	3600	3600	3600	4200
Diameter in.	24	24	24	24	24	26	26	26	26
Diameter (mm)	609.6	609.6	609.6	609.6	609.6	660.4	660.4	660.4	660.4
Motor Hp (Rpm)	1/10 (810)	1/10 (810)	1/10 (810)	1/10 (810)	1/5 (810)	1/5 (810	1/5 (810)	1/5 (810)	1/5 (810)
INDOOR COIL									
Rows...Fins/in.	3...17	3...17	3...17	3...17	3...17	3...17	3...17	3...17	3...17
Face Area (sq ft)	3.7	3.7	3.7	3.7	3.7	4.7	4.7	4.7	5.6
INDOOR BLOWER									
Nominal Cooling Airflow (Cfm)	800	800	1000	1000	1150	1350	1350	1550	1750
Size in.	10x10	10x10	10x10	10x10	11x10	11x10	11x10	11x10	11x10
Size (mm.)	254x254	254x254	254x254	254x254	279.4x254	279.4x254	279.4x254	279.4x254	279.4x254
Motor HP (RPM)	1/2 (1050)	1/2 (1050)	1/2 (1050)	1/2 (1050)	3/4 (1000)	1/2 (1050)	1/2 (1050)	1.0 (1075)	1.0 (1040)
FURNACE SECTION *									
Burner Orifice No. (Qty...Drill Size)									
1 & 3 Phase Ultra Low NOx- Natural Gas	1...0.125"	1…#28	1...0.125"	1…#28	1…#28	1…#28	1...#18	1...#18	1...#18
(Factory Installed)	size		size						
HIGH-PRESSURE SWITCH	650 +/- 15	650 +/- 15							
(psig) Cut-out Reset (Auto)	420 +/- 25	420 +/- 25							
LOSS-OF-CHARGE / LOW-PRESSURE SWITCH	50 +/- 7	20 +/- 5							N/A
(Liquid Line) (psig) cut-out Reset (auto)	95 +/- 7	45 +/- 10							
RETURN-AIR FILTERS†	2 each	2 each 20x12x1				1 each 24x14x1			1 each 24x16x1 (in.)
Throwaway Size in	20x12x1					610x356x25			610x406x25 (mm)
(mm)	508x305x25	508x305x25				24x15x1			24x18x1 (in.)
						610x406x25			610x457x25 (mm)

*. Based on altitude of 0 to 2000 ft (0-610m)

†. Required filter sizes shown are based on the larger of the AHRI (Air Conditioning Heating and Refrigeration Institute) rated cooling airflow or the heating airflow velocity of 300 to 350 ft/minute for throwaway type. Air filter pressure drop for non-standard filters must not exceed 0.08 IN. W.C.
If using accessory filter rack refer to the filter rack installation instructions for correct filter sizes and quantity.

N/A= Not Available

Table 2 – Maximum Gas Flow Capacity*

Nominal Iron Pipe Size (in.)	Internal Diameter (in.)	Length of Pipe ft (m)†													
		10 (3)	20 (6)	30 (9)	40 (12)	50 (15)	60 (18)	70 (21)	80 (24)	90 (27)	100 (30)	125 (38)	150 (46)	175 (53)	200 (61)
1/2	.622	175	120	97	82	73	66	61	57	53	50	44	40	—	—
3/4	.824	360	250	200	170	151	138	125	118	110	103	93	84	77	72
1	1.049	680	465	375	320	285	260	240	220	205	195	175	160	145	135
1-1/4	1.380	1400	950	770	600	580	530	490	460	430	400	360	325	300	280
1-1/2	1.610	2100	1460	1180	990	900	810	750	690	650	620	550	500	460	430

*. Capacity of pipe in cu ft of gas per hr for gas pressure of 0.5 psig or less. Pressure drop of 0.5-IN. W.C. (based on a 0.60 specific gravity gas). Refer to Table 2 and National Fuel Gas Code NFPA 54/ANSI Z223.1.

†. This length includes an ordinary number of fittings

Step 6 – Connect Condensate Drain

NOTE: When installing condensate drain connection be sure to comply with local codes and restrictions.

This unit disposes of condensate water through a 3/4 in. NPT fitting which exits through the base on the evaporator coil access side. See Fig. 3 and Fig. 4 for location.

Condensate water can be drained directly onto the roof in rooftop installations (where permitted) or onto a gravel apron in ground level installations. Install a field-supplied 2-in. (51 mm) condensate trap at the end of condensate connection to ensure proper drainage. Make sure that the outlet of the trap is at least 1 in. (25 mm) lower than the drain-pan condensate connection to prevent the pan from overflowing (See Fig. 7). Prime the trap with water. When using a gravel apron, make sure it slopes away from the unit.

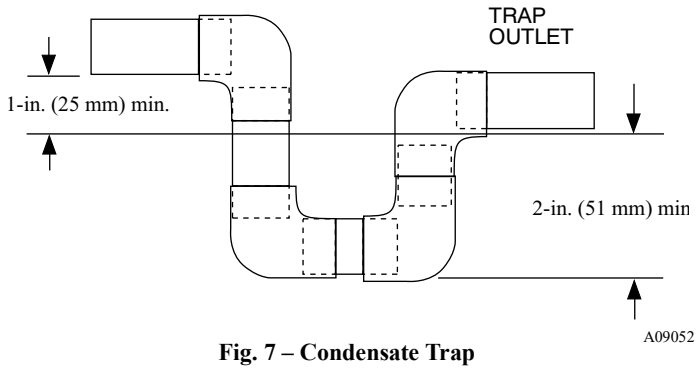

Fig. 7 – Condensate Trap

Connect a drain tube using a minimum of 3/4-in. PVC or 3/4-in. copper pipe (all field-supplied) at the outlet end of the 2-in. (51 mm) trap. Do not undersize the tube. Pitch the drain tube downward at a slope of at least 1-in. (25 mm) for every 10 ft (3.1 m) of horizontal run. Be sure to check the drain tube for leaks.

Step 7 – Install Flue Hood

The flue assembly is secured and shipped in the return air duct. Remove duct cover to locate the assembly (See Fig. 9).

NOTE: Dedicated low NOx models MUST be installed in California Air Quality Management Districts where a Low NOx rule exists.

These models meet certain California air managment districts maximum oxides of nitrogen (NOx) emissions requirements of 14 nanograms/joule or less as shipped from the factory.

NOTE: Low NOx requirements apply only to natural gas installations.

⚠ WARNING

CARBON MONOXIDE POISONING HAZARD

Failure to follow this warning cold result in personal injury or death.

The venting system is designed to ensure proper venting. The flue hood assembly must be installed as indicated in this section of the unit installation instructions.

Install the flue hood as follows:

1. This installation must conform with local building codes and with NFPA 54/ANSI Z223.1 National Fuel Gas Code (NFGC), (in Canada, CAN/CGA B149.1, and B149.2) latest revision. Refer to Provincial and local plumbing or wastewater codes and other applicable local codes.
2. Remove flue hood from shipping location (inside the return section of the blower compartment-see Fig. 9). Remove the return duct cover to locate the flue hood. Place flue hood assembly over flue panel. Orient screw holes in flue hood with holes in the flue panel.
3. Secure flue hood to flue panel by inserting a single screw on the top flange and the bottom flange of the hood.

Step 8 – Install Gas Piping

The gas supply pipe enters the unit through the access hole provided. The gas connection to the unit is made to the 1/2-in. (12.7 mm) FPT gas inlet on the gas valve.

Install a gas supply line that runs to the heating section. Refer to the NFGC for gas pipe sizing. Do not use cast-iron pipe. It is recommended that a black iron pipe is used. Check the local utility for recommendations concerning existing lines. Size gas supply piping for 0.5 IN. W.C. maximum pressure drop. Never use pipe smaller than the 1/2-in. (12.7 mm) FPT gas inlet on the unit gas valve.

For natural gas applications, the gas pressure at unit gas connection must not be less than 4.0 IN. W.C. or greater than 13 IN. W.C. while the unit is operating.

A 1/8-in. (3.2 mm) NPT plugged tapping, accessible for test gauge connection, must be installed immediately upstream of the gas supply connection to the gas valve.

When installing the gas supply line, observe local codes pertaining to gas pipe installations. Refer to the NFPA 54/ANSI Z223.1 latest edition (in Canada, CAN/CGA B149.1).

NOTE: In the state of Massachusetts:

1. Gas supply connections MUST be performed by a licensed plumber or gas fitter.
2. When flexible connectors are used, the maximum length shall not exceed 36 inches (915 mm).
3. When lever handle type manual equipment shutoff valves are used, they shall be T-handle valves.
4. The use of copper tubing for gas piping is NOT approved by the state of Massachusetts.

In the absence of local building codes, adhere to the following pertinent recommendations:

1. Avoid low spots in long runs of pipe. Grade all pipe 1/4 in. (6.35 mm) for every 15 ft (4.6 m) of length to prevent traps. Grade all horizontal runs downward to risers. Use risers to connect to heating section and to meter.
2. Protect all segments of piping system against physical and thermal damage. Support all piping with appropriate straps, hangers, etc. larger than 1/2 in., follow recommendations of national codes.

Use a minimum of one hanger every 6 ft (1.8 m). For pipe sizes

3. Apply joint compound (pipe dope) sparingly and only to male threads of joint when making pipe connections. Use only pipe dope that is resistant to action of liquefied petroleum gases as specified by local and/or national codes. Never use Teflon tape.
4. Install sediment trap in riser leading to heating section (See Fig. 8). This drip leg functions as a trap for dirt and condensate.
5. Install an accessible, external, manual main shutoff valve in gas supply pipe within 6 ft (1.8 m) of heating section.
6. Install ground-joint union close to heating section between unit manual shutoff and external manual main shut-off valve.
7. Pressure test all gas piping in accordance with local and national plumbing and gas codes before connecting piping to unit.

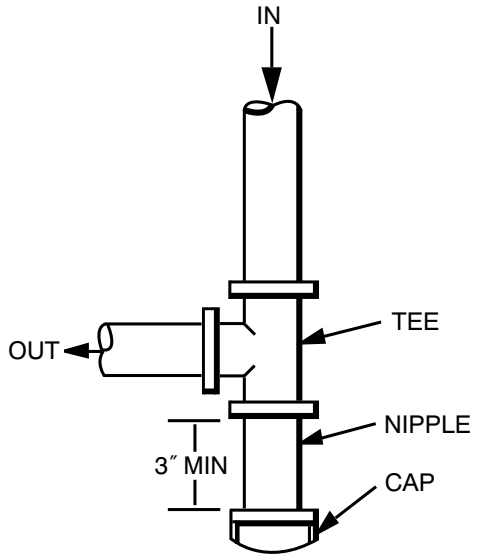

Fig. 8 – Sediment Trap

NOTE: Pressure test the gas supply system after the gas supply piping is connected to the gas valve. The supply piping must be disconnected from the gas valve during the testing of the piping systems when test pressure is in excess of 0.5 psig. Pressure test the gas supply piping system at pressures equal to or less than 0.5 psig. The unit heating section must be isolated from the gas piping system by closing the external main manual shutoff valve and slightly opening the ground-joint union.

⚠ WARNING

FIRE OR EXPLOSION HAZARD

Failure to follow this warning could result in personal injury, death and/or property damage.

- Connect gas pipe to unit using a backup wrench to avoid damaging gas controls.
- Never purge a gas line into a combustion chamber. Never test for gas leaks with an open flame. Use a commercially available soap solution made specifically for the detection of leaks to check all connections. A fire or explosion may result causing property damage, personal injury or loss of life.
- Use proper length of pipe to avoid stress on gas control manifold.
- If a flexible connector is required or allowed by authority having jurisdiction, black iron pipe shall be installed at furnace gas valve and extend a minimum of 2 in. (51 mm) outside furnace casing.
- If codes allow a flexible connector, always use a new connector. Do not use a connector which has previously serviced another gas appliance.

8. Check for gas leaks at the field-installed and factory-installed gas lines after all piping connections have been completed. Use a commercially available soap solution (or method specified by local codes and/or regulations).

Step 9 – Install Duct Connections

The unit has duct flanges on the supply- and return-air openings on the side and bottom of the unit. For downshot applications, the ductwork connects to the roof curb (See Fig. 3 and Fig. 4 for connection sizes and locations).

Configuring Units for Downflow (Vertical) Discharge

⚠ WARNING

ELECTRICAL SHOCK HAZARD

Failure to follow this warning could result in personal injury or death.

Before installing or servicing system, always turn off main power to system and install lockout tag. There may be more than one disconnect switch.

1. Open all electrical disconnects before starting any service work.
2. Remove horizontal (metal) duct covers to access vertical (downflow) discharge duct knockouts in unit basepan. (See Fig. 9.)

⚠ CAUTION

PROPERTY DAMAGE HAZARD

Failure to follow this caution may result in property damage.

Collect ALL screws that were removed. Do not leave screws on rooftop as permanent damage to the roof may occur.

3. For single-phase models only, on the discharge side only, remove the insulation covering the downshot (plastic) knockout. Insulation is held in place with aluminum tape. Please note that large chassis units have 2 pieces of insulation, and only the piece over the downshot knockout needs to be removed. Discard insulation.
4. To remove the downshot (plastic) knockouts for both supply and returns, break front and right side connecting tabs with a screwdriver and hammer. Push cover down to break rear and left

side tabs. These plastic knockouts are held in place with tabs similar to an electrical knockout. Discard plastic knockout covers.

5. Set unit on roof curb.
6. Verify that the downshot ducts are aligned with the downshot knockout areas.
7. Re-install horizontal (metal) covers as needed to seal unit. Ensure openings are air and watertight.

NOTE: The design and installation of the duct system must be in accordance with the standards of the NFPA for installation of nonresidence-type air conditioning and ventilating systems, NFPA 90A or residence-type, NFPA 90B; and/or local codes and ordinances.

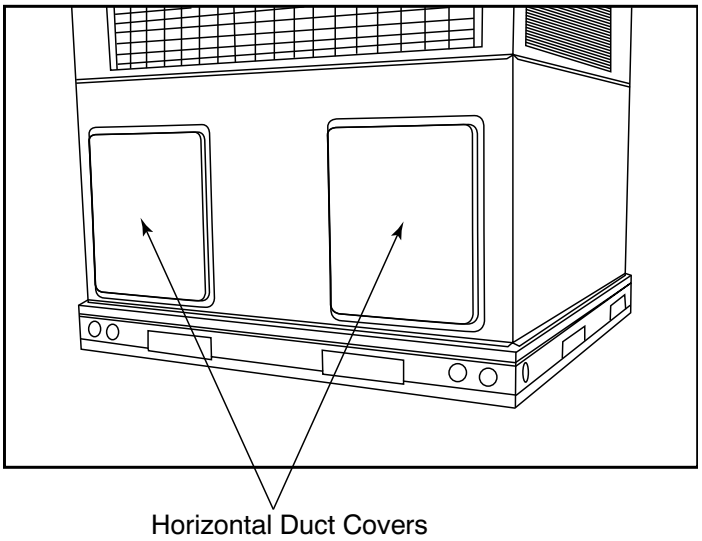

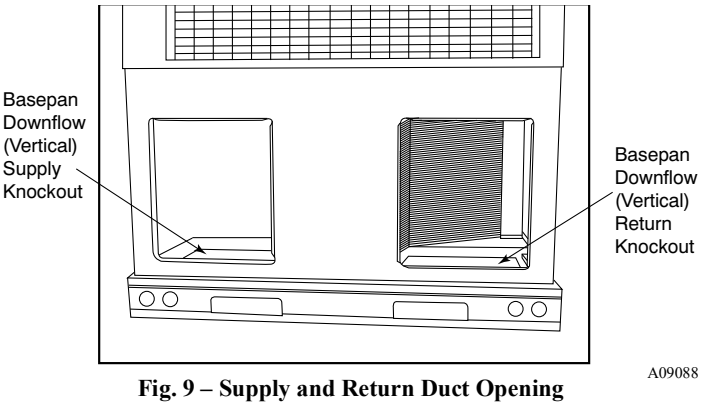

Fig. 9 – Supply and Return Duct Opening

Adhere to the following criteria when selecting, sizing, and installing the duct system:

1. Units are shipped for horizontal duct installation (by removing duct covers).
2. Select and size ductwork, supply-air registers, and return-air grilles according to American Society of Heating, Refrigeration and Air Conditioning Engineers (ASHRAE) recommendations.
3. Use flexible transition between rigid ductwork and unit to prevent transmission of vibration. The transition may be screwed or bolted to duct flanges. Use suitable gaskets to ensure weather-tight and airtight seal.
4. All units must have field-supplied filters or accessory filter rack installed in the return-air side of the unit. Recommended sizes for filters are shown in Table 1.
5. Size all ductwork for maximum required airflow (either heating or cooling) for unit being installed. Avoid abrupt duct size increases or decreases or performance may be affected.
6. Adequately insulate and weatherproof all ductwork located outdoors. Insulate ducts passing through unconditioned space, and use vapor barrier in accordance with latest issue of Sheet Metal and Air Conditioning Contractors National Association (SMACNA) and Air Conditioning Contractors of America (ACCA) minimum installation standards for heating and air conditioning systems. Secure all ducts to building structure.
7. Flash, weatherproof, and vibration isolate all openings in building structure in accordance with local codes and good building practices.

Step 10 – Install Electrical Connections

⚠ WARNING

ELECTRICAL SHOCK HAZARD

Failure to follow this warning could result in personal injury or death.

The unit cabinet must have an uninterrupted, unbroken electrical ground. This ground may consist of an electrical wire connected to the unit ground screw in the control compartment, or conduit approved for electrical ground when installed in accordance with NFPA 70 (NEC) (latest edition) (in Canada, Canadian Electrical Code CSA C22.1) and local electrical codes.

⚠ CAUTION

UNIT COMPONENT DAMAGE HAZARD

Failure to follow this caution may result in damage to the unit being installed.

1. Make all electrical connections in accordance with NFPA 70 (NEC) (latest edition) and local electrical codes governing such wiring. In Canada, all electrical connections must be in accordance with CSA standard C22.1 Canadian Electrical Code Part 1 and applicable local codes. Refer to unit wiring diagram.
2. Use only copper conductor for connections between field-supplied electrical disconnect switch and unit. DO NOT USE ALUMINUM WIRE.
3. Be sure that high-voltage power to unit is within operating voltage range indicated on unit rating plate. On 3-phase units, ensure phases are balanced within 2 percent. Consult local power company for correction of improper voltage and/or phase imbalance.
4. Insulate low-voltage wires for highest voltage contained within conduit when low-voltage control wires are in same conduit as high-voltage wires.
5. Do not damage internal components when drilling through any panel to mount electrical hardware, conduit, etc.
6. Route field power supply(s) away from areas that could be damaged by lawn and garden equipment or other accidental damage.

High-Voltage Connections

When routing power leads into unit, use only copper wire between disconnect and unit. The high voltage leads should be in a conduit until they enter the duct panel; conduit termination at the duct panel must be watertight.

The unit must have a separate electrical service with a field-supplied, waterproof disconnect switch mounted at, or within sight from, the unit. Refer to the unit rating plate, NEC and local codes for maximum fuse/circuit breaker size and minimum circuit amps (ampacity) for wire sizing.

The field-supplied disconnect switch box may be mounted on the unit over the high-voltage inlet hole when the standard power and

low-voltage entry points are used (See Fig. 3 and Fig. 4 for acceptable location).

NOTE: Field supplied disconnect switch box should be positioned so that it does not cover up any of the unit gas combustion supply air louvers.

See unit wiring label (Fig. 15 - Fig. 18) and Fig. 10 for reference when making high voltage connections. Proceed as follows to complete the high-voltage connections to the unit.

Single phase units:

1. Run the high-voltage (L1, L2) and ground lead into the control box.
2. Connect ground lead to chassis ground connection.
3. Locate the black and yellow wires connected to the line side of the contactor (if equipped).
4. Connect field L1 to black wire on connection 11 of the compressor contactor.
5. Connect field wire L2 to yellow wire on connection 23 of the compressor contactor.

Three-phase units:

1. Run the high-voltage (L1, L2, L3) and ground lead into the control box.
2. Connect ground lead to chassis ground connection.
3. Locate the black and yellow wires connected to the line side of the contactor (if equipped).
4. Connect field L1 to black wire on connection 11 of the compressor contactor.
5. Connect field wire L3 to yellow wire on connection 13 of the compressor contactor.
6. Connect field wire L2 to blue wire from compressor.

Special Procedures for 208-v Operation

WARNING

ELECTRICAL SHOCK HAZARD

Failure to follow this warning could result in personal injury or death.

Make sure the power supply to the unit is switched OFF and install lockout tag. before making any wiring changes. With disconnect switch open, move black wire from transformer (3/16 in. [4.8 mm]) terminal marked 230 to terminal marked 208. This retaps transformer to primary voltage of 208 vac.

WARNING

ELECTRICAL SHOCK FIRE/EXPLOSION HAZARD

Failure to follow this warning could result in personal injury or death and property damage.

Before making any wiring changes, make sure the gas supply is switched off first. Then switch off the power supply to the unit and install lockout tag.

Control Voltage Connections

Do not use any type of power-stealing thermostat. Unit control problems may result.

Use no. 18 American Wire Gage (AWG) color-coded, insulated (35°C minimum) wires to make the control voltage connections between the thermostat and the unit. If the thermostat is located more than 100 ft (30.5 m) from the unit (as measured along the control voltage wires), use no. 16 AWG color-coded, insulated (35°C minimum) wires.

Standard Connection

Run the low-voltage leads from the thermostat, through the inlet hole, and into unit low-voltage splice box.

Locate six (seven for 3-phase) 18-gage wires leaving control box. These low-voltage connection leads can be identified by the colors red, green, yellow, brown, blue, and white (See Fig. 10). A gray wire is standard on 3-phase units for connection to an economizer. Ensure the leads are long enough to be routed into the low-voltage splice box (located below right side of control box). Route leads through hole in bottom of control box and make low-voltage connections (See Fig. 10). Secure all cut wires, so that they do not interfere with operation of unit.

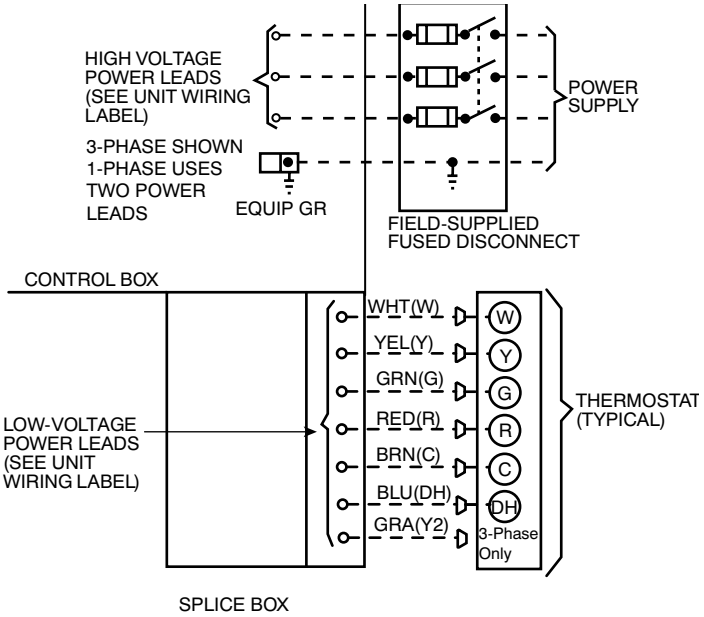

Fig. 10 – High- and Control-Voltage Connections

Heat Anticipator Setting (Electro-Mechanical Thermostats only)

The room thermostat heat anticipator must be properly adjusted to ensure proper heating performance. Set the heat anticipator, using an ammeter between the W and R terminals to determine the exact required setting.

NOTE: For thermostat selection purposes, use 0.18 amp for the approximate required setting. Failure to make a proper heat anticipator adjustment will result in improper operation, discomfort to the occupants of the conditioned space, and inefficient energy utilization; however, the required setting may be changed slightly to provide a greater degree of comfort for a particular installation.

Transformer Protection

The transformer is of the energy-limiting type, however a direct short will likely blow a secondary fuse. If an overload or short is present, correct overload condition and check for blown fuse on Indoor Fan board or Integrated Gas Controller. Replace fuse as required with correct size and rating.

Pre-start-up

⚠ WARNING

ENVIRONMENTAL, FIRE, EXPLOSION, ELECTRICAL SHOCK HAZARD

Failure to follow this warning could result in personal injury or death.

1. Follow recognized safety practices and wear protective goggles when checking or servicing refrigerant system.
2. Do not operate compressor or provide any electric power to unit unless compressor plug is in place and secured.
3. Do not remove compressor plug until all electrical sources are disconnected and tagged.
4. Relieve and recover all refrigerant from system before touching or disturbing compressor plug if refrigerant leak is suspected around compressor terminals.
5. Never attempt to repair soldered connection while refrigerant system is under pressure.
6. Do not use torch to remove any component. System contains oil and refrigerant under pressure.
   To remove a component, wear protective goggles and proceed as follows:
   a. Shut off electrical power to unit and install lockout tag.
   b. Relieve and reclaim all refrigerant from system using both high- and low-pressure ports.
   c. Cut component connecting tubing with tubing cutter and remove component from unit.
   d. Carefully unsweat remaining tubing stubs when necessary. Oil can ignite when exposed to torch flame.

Use the Start-Up Checklist supplied at the end of this book and proceed as follows to inspect and prepare the unit for initial start-up:

1. Remove access panels (see Fig. 22).
2. Read and follow instructions on all DANGER, WARNING, CAUTION, and INFORMATION labels attached to, or shipped with unit.
3. Make the following inspections:
   a. Inspect for shipping and handling damage, such as broken lines, loose parts, disconnected wires, etc.
   b. Inspect all field- and factory-wiring connections. Be sure that connections are completed and tight.
   c. Ensure wires do not touch refrigerant tubing or sharp sheet metal edges.
   d. Inspect coil fins. If damaged during shipping and handling, carefully straighten fins with a fin comb.

⚠ WARNING

FIRE, EXPLOSION HAZARD

Failure to follow this warning could result in personal injury, death or property damage.

Do not purge gas supply into the combustion chamber. Do not use a match or other open flame to check for gas leaks.

Use a commercially available soap solution made specifically for the detection of leaks to check all connections. A fire or explosion may result causing property damage, personal injury or loss of life.

4. Verify the following conditions:
   a. Make sure gas line is free of air. Before lighting the unit for the first time, perform the following with the gas valve in the OFF position:

NOTE: If the gas supply pipe was not purged before connecting the unit, it will be full of air. It is recommended that the ground joint union be loosened, and the supply line be allowed to purge until the odor of gas is detected. Never purge gas lines into a combustion chamber. Immediately upon detection of gas odor, retighten the union. Allow 5 minutes to elapse, then light unit.

   b. Ensure fan hub is positioned correctly with respect to motor housing.
   c. Make sure that air filter(s) is in place.
   d. Make sure that condensate drain trap is filled with water to ensure proper drainage.
   e. Make sure that all tools and miscellaneous loose parts have been removed.

Start-up

⚠ WARNING

FIRE, INJURY, OR DEATH HAZARD

Failure to follow this warning could result in property damage, personal injury, or death.

Do not bypass any of the safety controls in the unit, including but not limited to the main limit switch, rollout or burner rollout switch, and pressure switch/pressure transducer.

Step 1 – Check for Refrigerant Leaks

⚠ WARNING

EXPLOSION HAZARD

Failure to follow this warning could result in death, serious personal injury, and/or property damage.

Never use air or gases containing oxygen for leak testing or operating refrigerant compressors. Pressurized mixtures of air or gases containing oxygen can lead to an explosion.

Proceed as follows to locate and repair a refrigerant leak and to charge the unit:

1. Locate leak and make sure that refrigerant system pressure has been relieved and reclaimed from both high- and low-pressure ports.
2. Repair leak following accepted practices.

NOTE: Install a filter drier whenever the system has been opened for repair.

3. Add a small charge of Puron (R-410A) refrigerant vapor to system and leak-test unit.
4. Recover refrigerant from refrigerant system and evacuate to 500 microns if no additional leaks are found.
5. Charge unit with Puron (R-410A) refrigerant, using an accurate scale. Refer to unit rating plate for required charge.

Step 2 – Start-up Heating and Make Adjustments

Complete the required procedures given in the Pre-Start-Up section before starting the unit. Do not jumper any safety devices when operating the unit. Make sure that burner orifices are properly aligned. Unstable operation my occur when the burner orifices in the manifold are misaligned.

Follow the lighting instructions on the heating section operation label (located on the inside of the control access panel) to start the heating section.

NOTE: Make sure that gas supply has been purged, and that all gas piping has been checked for leaks.

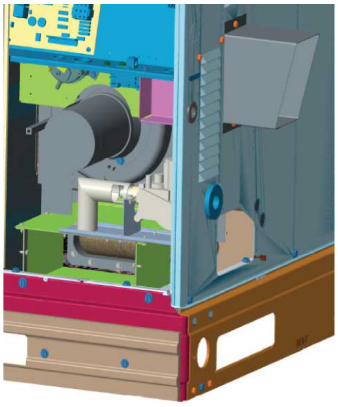

A180078

Fig. 11 – Burner Assembly

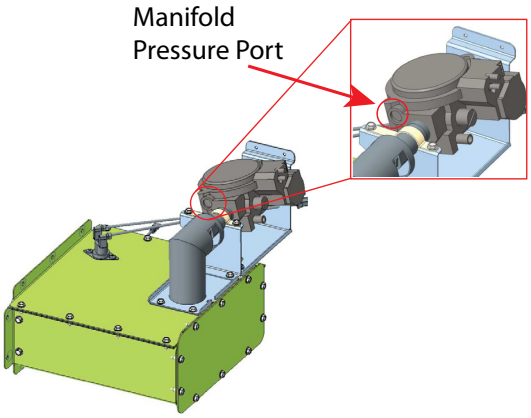

A200293

Fig. 12 – BurnerBox/Gas Manifold Assembly

Check Heating Control

Start and check the unit for proper heating control operation as follows (see furnace lighting instructions located on the inside of the control access panel):

1. Place room thermostat SYSTEM switch in the HEAT position and the fan switch is placed in AUTO position.
2. Set the heating temperature control of the thermostat above room temperature.
3. The induced-draft motor will start.
4. On a call for heating, the main burner should light within 5 sec. of the spark being energized. If the burners do not light, there is a 22-sec. delay before another 5-sec. try. If the burners still do not light, this sequence is repeated. If the burners do not light on the 4th ignition attempt, there is a lockout. To reset the control, break the 24-v power to W.

NOTE: The ULN system will sound different from a traditional furnace that utilizes inshot burners. For the ULN system, the access door is part of the system and must be installed on the unit for any sound evaluations.

5. The evaporator fan will turn on 30 sec. after the flame has been established. The evaporator fan will turn off 90 sec. after the thermostat has been satisfied. Please note that the integrated gas unit controller (IGC) has the capability to automatically reduce the evaporator "ON" delay and increase the evaporator "OFF" delay in the event of high duct static and/or partially-clogged filter.

Check Gas Input

Check gas input and manifold pressure after unit start-up (See Table 5). If adjustment is required proceed as follows:

- The rated gas inputs shown in Table 5 are for altitudes from sea level to 2000 ft (610 m) above sea level. These inputs are based on natural gas with a heating value of 1025 Btu/ft^3 at 0.60 specific gravity.

Table 3 – Altitude Derate Multiplier for U.S.A.*

Altitude ft† (m)	Percent of Derate	Derate Multiplier Factor‡
0-2000 (0-610)	0	1.00

*. In Canada see Canadian Altitude Adjustment.
†. Altitude of 2001 ft and above is not allowed.
‡. Derate multiplier factors are based on midpoint altitude for altitude range.

When the gas supply being used has a different heating value or specific gravity, refer to national and local codes, or contact your distributor to determine the required orifice size.

WARNING

UNIT DAMAGE HAZARD

Failure to follow this caution may result in reduced unit and/or component life.

Do Not redrill an orifice. Improper drilling (burrs, out-of-round holes, etc.) can cause excessive burner noise and misdirection of burner flame. If orifice hole appears damaged or it is suspected to have been redrilled, check orifice hole with a numbered drill bit of correct size.

Adjust Gas Input

The gas input to the unit is determined by measuring the gas flow at the meter or by measuring the manifold pressure. Measuring the gas flow at the meter is recommended for natural gas units. Measure Gas Flow (Natural Gas Units)

Minor adjustment to the gas flow can be made by changing the manifold pressure. The manifold pressure must be maintained between 3.2 and 3.8 IN. W.C.

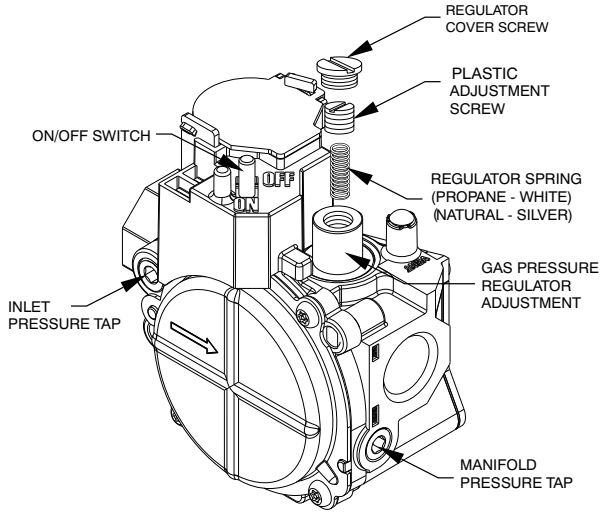

A07751

Fig. 13 – Standard Single-Stage Gas Valve

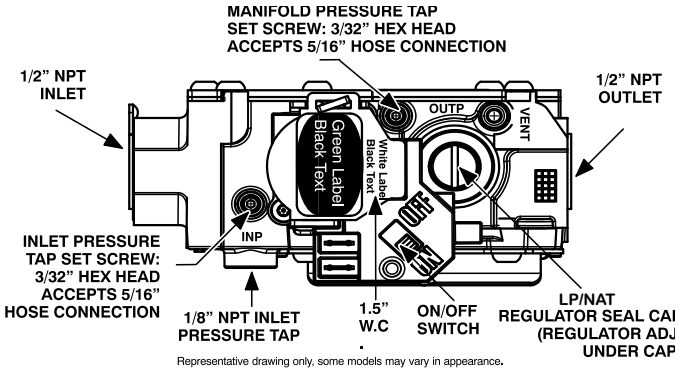

Fig. 14 – Single-Stage Gas Valve with Tower Pressure Ports

If larger adjustments are required, change main burner orifices following the recommendations of national and local codes.

NOTE: All other appliances that use the same meter must be turned off when gas flow is measured at the meter.

Proceed as follows:

1. Turn off gas supply to unit.
2. Manifold pressure connections
   a. For standard gas valves, remove manifold pressure tap cover using an allen wrench. (See Fig. 13). Install barbed pressure tap and hose to connect to manometer. Turn on gas supply to unit.
   b. For gas valve with tower pressure ports, loosen set screw on manifold tower pressure tap no more than one full turn with a 3/32-in. hex wrench. (See Fig. 14.) Connect manometer by sliding 5/16" connecting hose over the manifold tower pressure port. Turn on gas supply to unit.
3. Record number of seconds for gas meter test dial to make one revolution.
4. Divide number of seconds in Step 3 into 3600 (number of seconds in one hr).
5. Multiply result of Step 4 by the number of cubic feet (cu ft) shown for one revolution of test dial to obtain cubic feet (cu ft) of gas flow per hour.
6. Multiply result of Step 5 by Btu heating value of gas to obtain total measured input in Btuh. Compare this value with heating input shown in Table 5 (Consult the local gas supplier if the heating value of gas is not known).

EXAMPLE: Assume that the size of test dial is 1 cu ft, one revolution takes 32 sec, and the heating value of the gas is 1050 Btu/ft3. Proceed as follows:

1. 41 sec. to complete one revolution
2. 3600 / 41 = 87.8
3. 87.8 x 1 = 87.8 ft^3 of gas flow/hr
4. 87.8 x 1050 = 92,190 Btuh input

If the desired gas input is 89,000 Btuh, only a minor change in the manifold pressure is required.

Observe manifold pressure and proceed as follows to adjust gas input:

1. Remove regulator cover screw over plastic adjustment screw on gas valve (See Fig. 13 and Fig. 14).
2. Turn plastic adjustment screw clockwise to increase gas input, or turn plastic adjustment screw counterclockwise to decrease input (See Fig. 13 and Fig. 14). Manifold pressure must be between 3.2 and 3.8 IN. WC.

NOTE: Manifold pressure must be checked with the access door on.

⚠ WARNING

FIRE AND UNIT DAMAGE HAZARD

Failure to follow this warning could result in personal injury or death and/or property damage.

Unsafe operation of the unit may result if manifold pressure is outside this range.

3. Replace regulator cover screw on gas valve (See Fig. 13 and Fig. 14).
4. Turn off gas supply to unit.
5. Removing manometer from pressure tab.
   a. For standard gas valve, remove manometer hose and barbed pressure tap. Replace pressure tap cover using an allen wrench. (See Fig. 13.)
   b. For gas valve with tower pressure port, remove connecting hose. Tighten set screw on manifold pressure port using a 3/32" hex wrench. (See Fig. 14.)
6. Turn on gas to unit and check for leaks.

Table 4 – High Altitude Compensation, Natural Gas - Single and Three Phase Models

Nameplate Input (Btu/hr)	Rated Heating Input (Btu/hr), Natural Gas at Installation Altitude Above Sea Level, U.S.A.
	0 to 2000 ft* (0-610 m)
45,000	45,000
60,000	60,000
89,000	89,000

*. Altitude of 2001ft and above is not allowed.

Table 5 – Heating Inputs

Heating Input (BTUH)	Number of Orifices	Gas Supply Pressure (IN. W.C.)				Manifold Pressure (IN. W.C.)	
		Natural*		Propane			
		Min	Max	Min	Max	Natural*	Propane
45,000	1	5	13.0	N/A	N/A	3.2~3.8	N/A
60,000	1	4.5	13.0	N/A	N/A	3.2~3.8	N/A
89,000	1	5	13.0	N/A	N/A	3.2~3.8	N/A

*. Based on altitudes from sea level to 2000 ft (610 m) above sea level.
N/A = Not applicable (Units are not convertible to propane)

CONNECTION WIRING DIAGRAM
DANGER: ELECTRICAL SHOCK HAZARD DISCONNECT POWER BEFORE SERVICING
SCHEMATIC 208/230-1-60

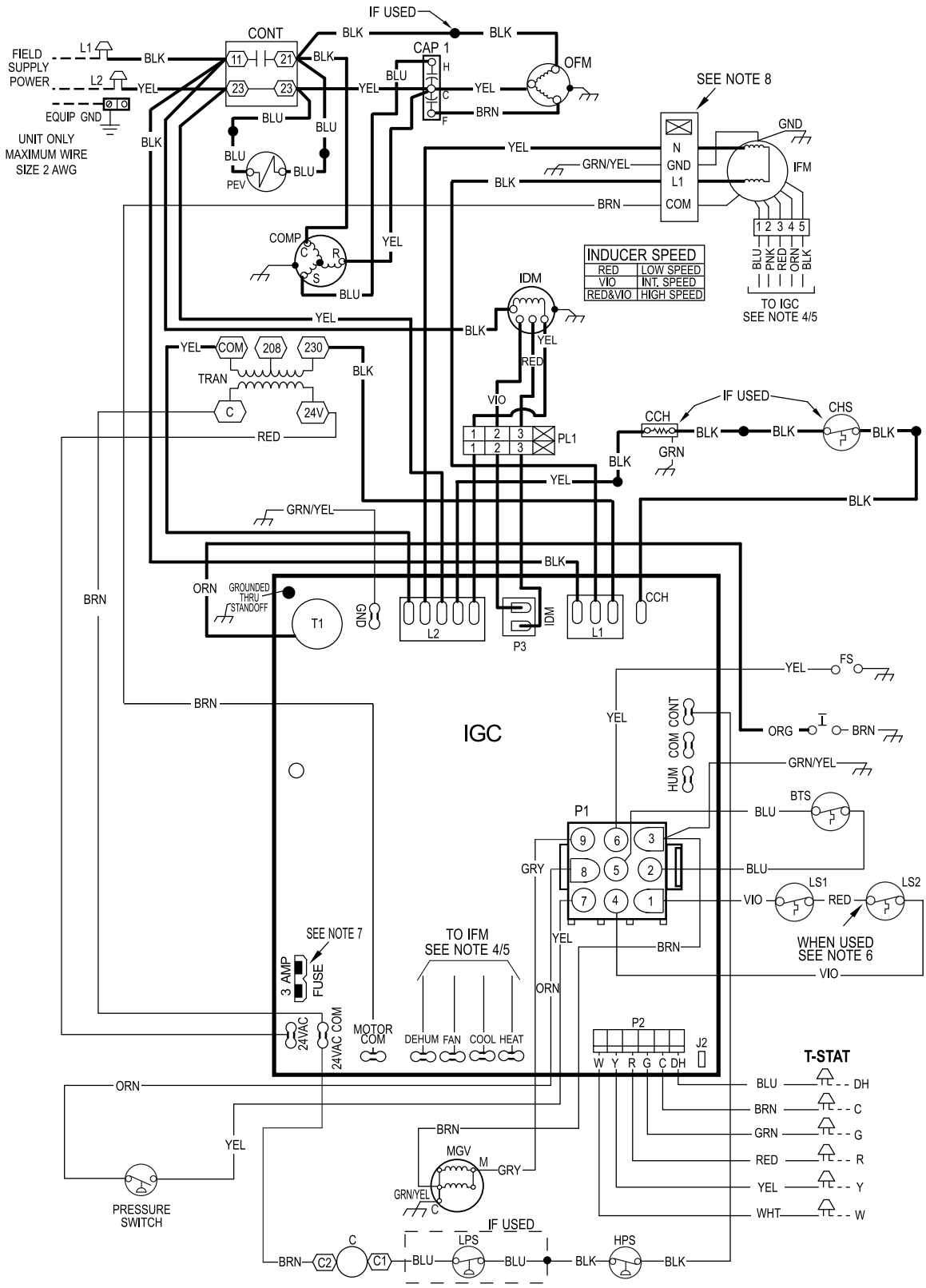

A220472

Fig. 15 – 208/230-1-60 Ultra Low NOx Connection Wiring Diagram

LADDER WIRING DIAGRAM
DANGER: ELECTRICAL SHOCK HAZARD DISCONNECT POWER BEFORE SERVICING

LEGEND

	FIELD SPLICE	CONT	COMPRESSOR CONTACTOR
	TERMINAL (MARKED)	EQUIP	EQUIPMENT
	TERMINAL (UNMARKED)	FS	FLAME SENSOR
	SPLICE	GND	GROUND
	SPLICE (MARKED)	HPS	HIGH PRESSURE SWITCH
	FACTORY LO VOLTAGE	I	IGNITOR
	FIELD CONTROL WIRING	IDM	INDUCED DRAFT MOTOR
	FIELD POWER WIRING	IFM	INDOOR FAN MOTOR
	ACCESSORY OR OPTIONAL WIRING	IGC	INTEGRATED GAS UNIT CONTROLLER
	FACTORY HI VOLTAGE	LPS	LOW PRESSURE SWITCH
BTS	BURNER THERMAL SWITCH	LS1	PRIMARY LIMIT SWITCH
C	CONTACTOR	LS2	SECONDARY LIMIT SWITCH
CAP1	CAPACITOR, COMP	MGV	MAIN GAS VALVE
CAP2	CAPACITOR, INDUCER (WHEN USED)	OFM	OUTDOOR FAN MOTOR
CCH	CRANKCASE HEATER	OT	QUADRUPLE TERMINAL
CHS	CRANKCASE HEATER SWITCH	PEV	PRESSURE EQUALIZER VALVE (IF USED)
COMP	COMPRESSOR MOTOR	TRAN	TRANSFORMER
		T-STAT	THERMOSTAT

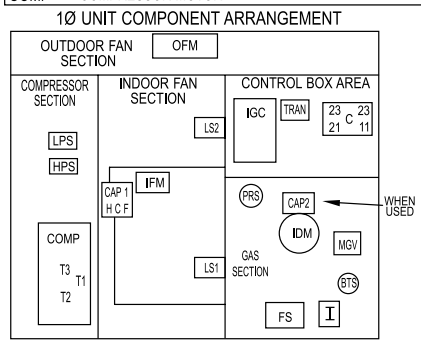

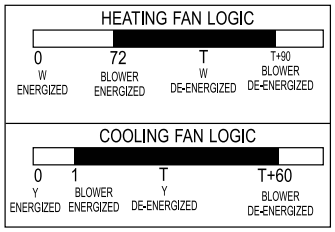

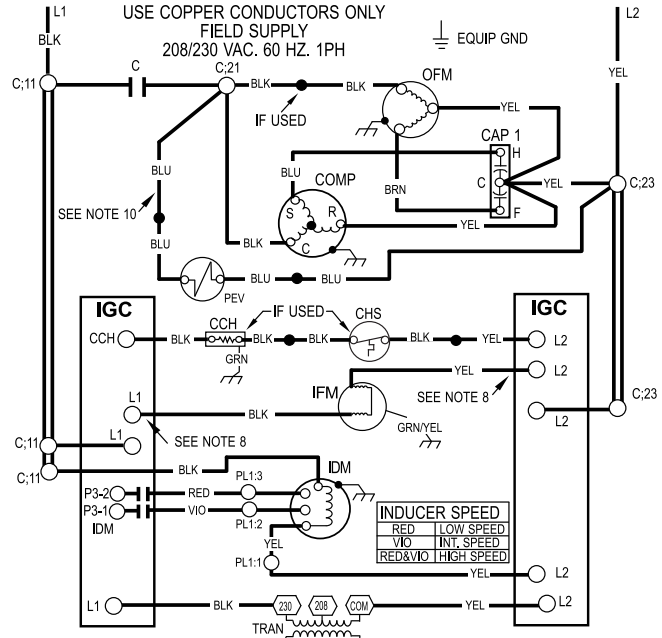

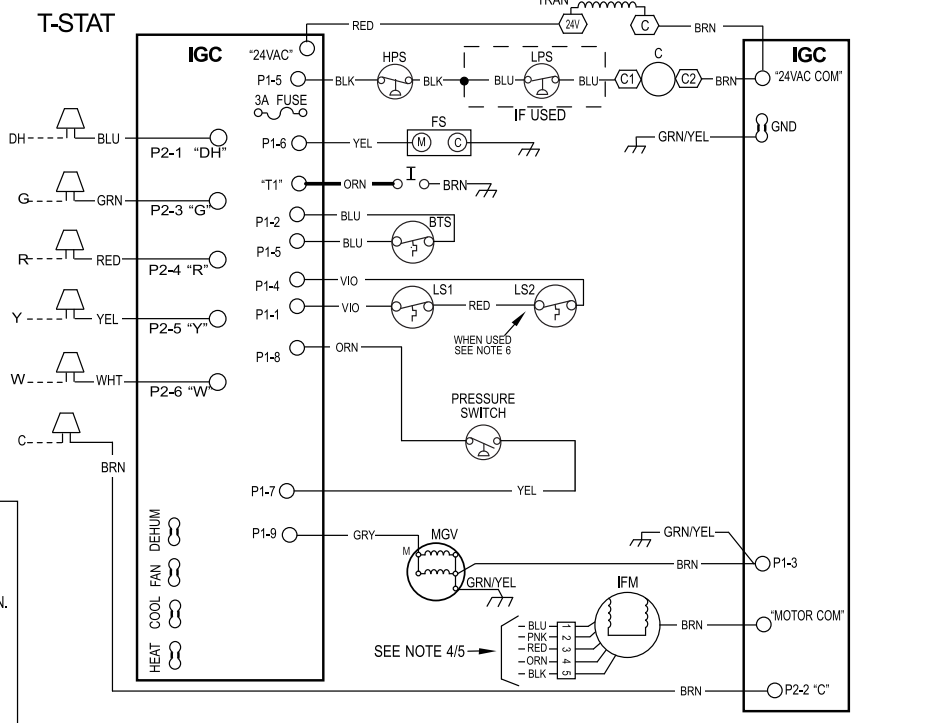

NOTES:

1. IF ANY OF THE ORIGINAL WIRES FURNISHED ARE REPLACED THEY MUST BE REPLACED WITH THE SAME WIRE OR IT'S EQUIVALENT.
2. SEE PRE-SALE LITERATURE FOR THERMOSTATS.
3. USE 75 DEGREES C COPPER CONDUCTORS FOR FIELD INSTALLATION.
4. REFER TO INSTALLATION INSTRUCTIONS FOR CORRECT SPEED SELECTION FOR IFM.
5. SEE INSTALLATION INSTRUCTIONS FOR PROPER HEATING AND COOLING CONNECTIONS FOR YOUR UNIT.
6. ON SOME MODELS LS1 AND LS2 ARE WIRED IN SERIES. ON OTHER MODELS ONLY LS1 IS USED.
7. THIS FUSE IS MANUFACTURED BY LITTLE FUSE, P/N 287003.
8. DO NOT DISCONNECT PLUG UNDER LOAD.
9. N.E.C. CLASS 2, 24V.
10. PEV FOUND ON SELECT ROTARY COMPRESSORS.
11. INDUCER MOTOR USES A 230V CONTROL SIGNAL.

345854-101 REV.C

345854-101 REV.C

A220473

Fig. 16 – 208/230-1-60 Ultra Low NOx Ladder Wiring Diagram

CONNECTION WIRING DIAGRAM
DANGER: ELECTRICAL SHOCK HAZARD DISCONNECT POWER BEFORE SERVICING
SCHEMATIC 208/230-3-60

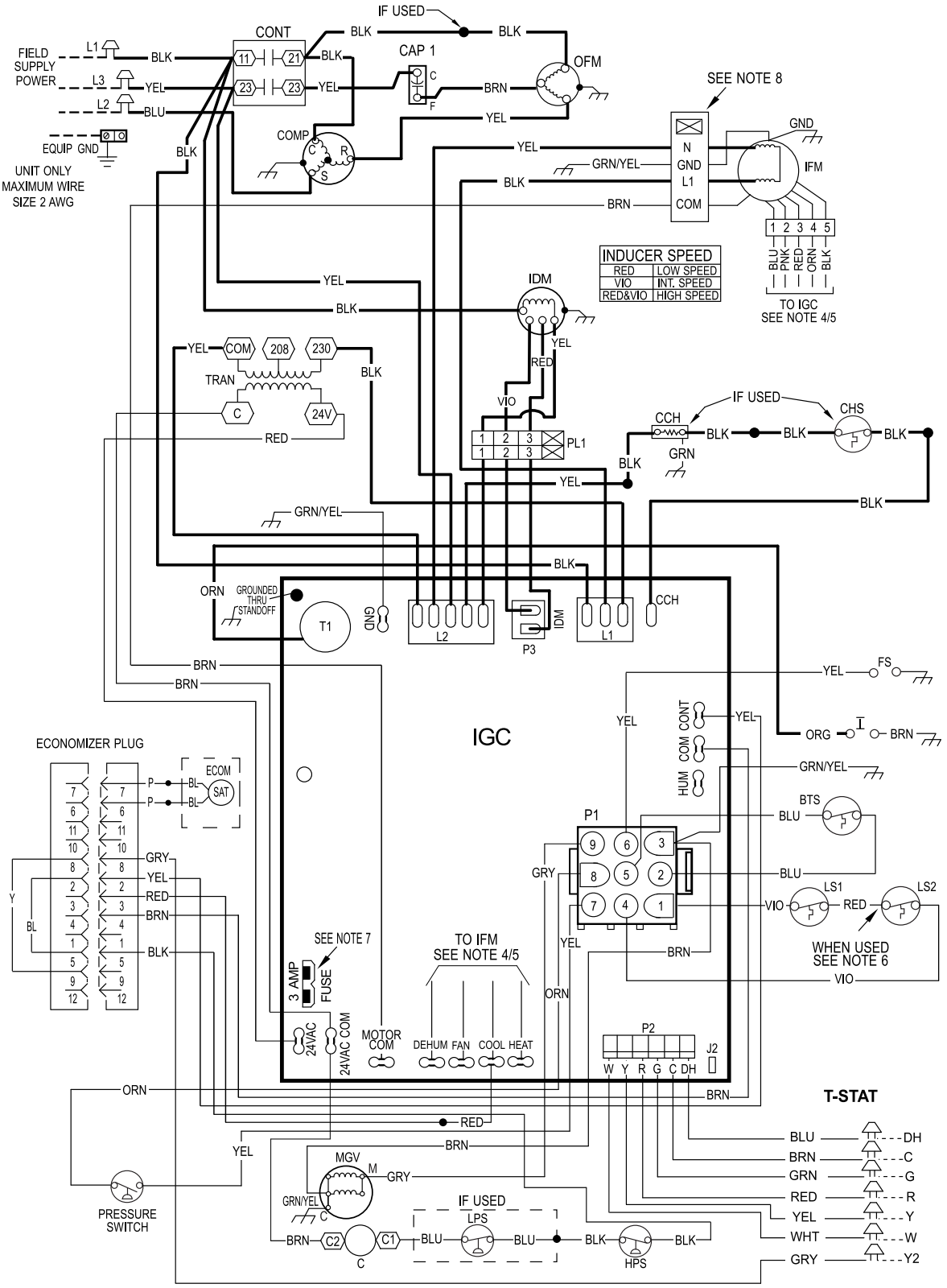

A220474

Fig. 17 – 208/230-3-60 Ultra Low NOx Connection Wiring Diagram

LADDER WIRING DIAGRAM
DANGER: ELECTRICAL SHOCK HAZARD DISCONNECT POWER BEFORE SERVICING

LEGEND

	FIELD SPLICE	EQUIP	EQUIPMENT
	TERMINAL (MARKED)	FS	FLAME SENSOR
	TERMINAL (UNMARKED)	GND	GROUND
	SPLICE	HPS	HIGH PRESSURE SWITCH
	SPLICE (MARKED)	I	IGNITOR
	FACTORY LO VOLTAGE	IDM	INDUCED DRAFT MOTOR
	FIELD CONTROL WIRING	IFM	INDOOR FAN MOTOR
	FIELD POWER WIRING	IGC	INTEGRATED GAS UNIT CONTROLLER
	ACCESSORY OR OPTIONAL WIRING	LPS	LOW PRESSURE SWITCH
	FACTORY HI VOLTAGE	LS1	PRIMARY LIMIT SWITCH
BTS	BURNER THERMAL SWITCH	LS2	SECONDARY LIMIT SWITCH
C	CONTACTOR	MGV	MAIN GAS VALVE
CAP1	CAPACITOR, COMP	OFM	OUTDOOR FAN MOTOR
CAP2	CAPACITOR, INDUCER (WHEN USED)	OT	QUADRUPLE TERMINAL
CCH	CRANKCASE HEATER	TRAN	TRANSFORMER
CHS	CRANKCASE HEATER SWITCH	T-STAT	THERMOSTAT
COMP	COMPRESSOR MOTOR		
CONT	COMPRESSOR CONTACTOR		

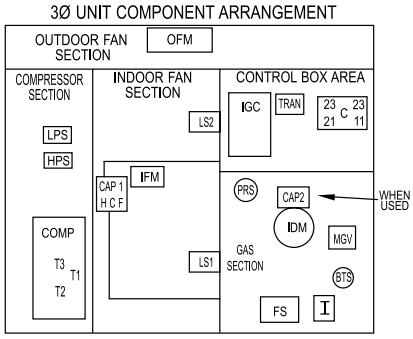

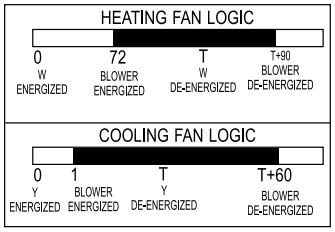

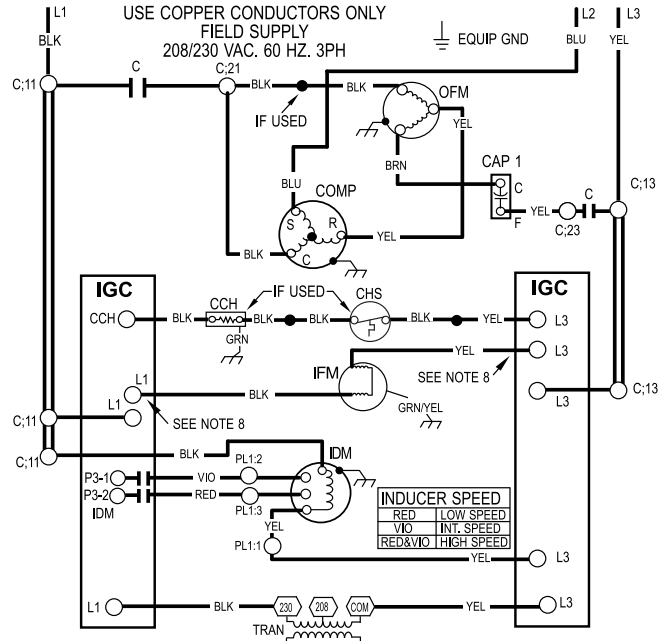

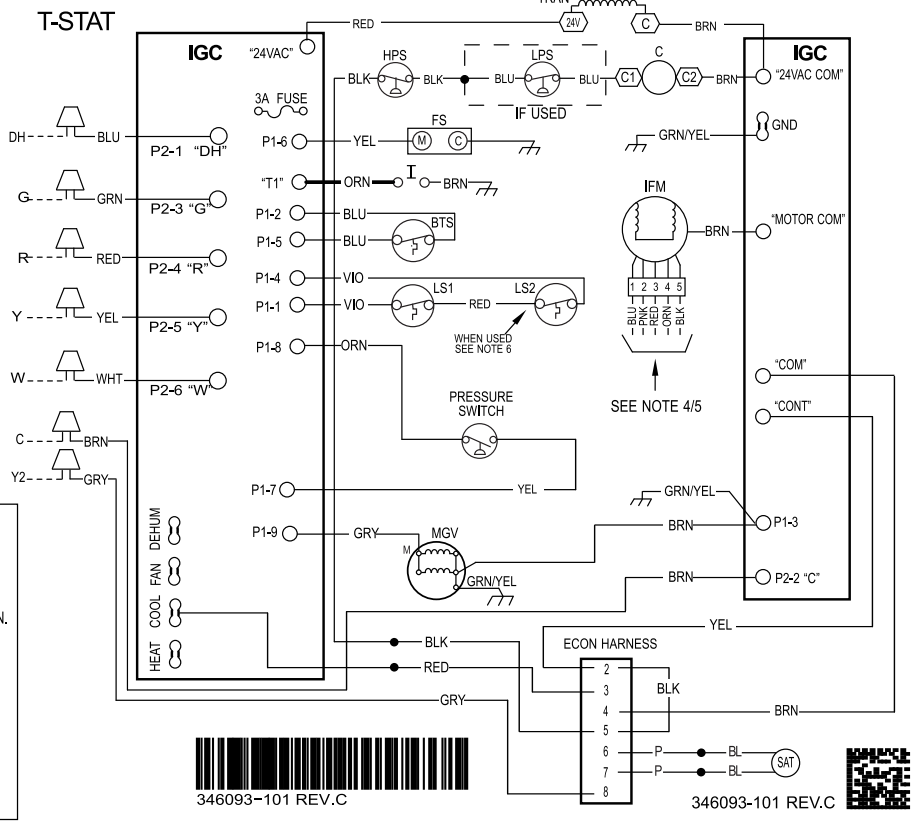

NOTES:

1. IF ANY OF THE ORIGINAL WIRES FURNISHED ARE REPLACED THEY MUST BE REPLACED WITH THE SAME WIRE OR IT'S EQUIVALENT.
2. SEE PRE-SALE LITERATURE FOR THERMOSTATS.
3. USE 75 DEGREES C COPPER CONDUCTORS FOR FIELD INSTALLATION.
4. REFER TO INSTALLATION INSTRUCTIONS FOR CORRECT SPEED SELECTION FOR IFM.
5. SEE INSTALLATION INSTRUCTIONS FOR PROPER HEATING AND COOLING CONNECTIONS FOR YOUR UNIT.
6. ON SOME MODELS LS1 AND LS2 ARE WIRED IN SERIES. ON OTHER MODELS ONLY LS1 IS USED.
7. THIS FUSE IS MANUFACTURED BY LITTLE FUSE, P/N 287003.
8. DO NOT DISCONNECT PLUG UNDER LOAD.
9. N.E.C. CLASS 2, 24V.
10. INDUCER MOTOR USES A 230V CONTROL SIGNAL.

A220475

Fig. 18 – 208/230-3-60 Ultra Low NOx Ladder Wiring Diagram

Normal Operation

An LED (light-emitting diode) indicator is provided on the integrated gas unit controller (IGC) to monitor operation. The IGC is located by removing the control access panel (see Fig. 22). During normal operation, the LED is continuously on (See Table 6 for error codes).

Airflow and Temperature Rise

The heating section for each size unit is designed and approved for heating operation within the temperature-rise range stamped on the unit rating plate.

Table 9 shows the approved temperature rise range for each heating input, and the air delivery cfm at various temperature rises for a given external static pressure. The heating operation airflow must produce a temperature rise that falls within the approved range.

Refer to Indoor Airflow and Airflow Adjustments section to adjust heating airflow when required.

Heating Sequence of Operation (Ultra Low NOx Single and Three Phase Models)

(See Fig. 15 - Fig. 18 and unit wiring label)

On a call for heating, terminal W of the thermostat is energized, starting the induced-draft motor for a 30 second pre-purge at intermediate speed. When the pressure switch senses that the induced-draft motor is moving sufficient combustion air, the burner sequence begins. This function is controlled by the integrated gas unit controller (IGC).

After 30 sec of pre-purge is complete, the pressure switch checks for sufficient combustion. Then, the gas valve energizes and the system attempts to ignite with igniter being energized. The igniter energizes for 5 sec and integrated gas controller (IGC) allows system to sense flame for 2 sec at the end of 5 sec of ignition trial. On first successful ignition, system stays at the intermediate inducer speed for 10 sec and gradually ramps up to the high speed for steady-state operation. The system uses the same logic for 2nd ignition trial. If a 3rd or 4th ignition attempt is needed, the inducer speed is decreased to the low speed. On a successful light on the 3rd or 4th attempt, the inducer speed is increased to the intermediate speed for about 10 seconds and then gradually ramps up to the high speed for steady-state operation. In case the 4th attempt fails, the system will lock out for 1 hr. After 1 hr. lock out period, the system starts with normal operating sequence. Once flame is established and proven successfully, indoor (evaporator) fan motor is energized after 30 seconds. When the thermostat is satisfied and W is de-energized, the pre-mix burner will stop firing and the indoor (evaporator) fan motor shuts off after a 90 second time-off delay. Please note that the IGC has the capability to automatically decrease the indoor (evaporator) fan motor "ON" delay and increase the indoor (evaporator) fan motor "OFF" delay in the event of high duct static and/or partially-clogged filter.

Limit Switches

Normally closed limit switch (LS) completes the control circuit. Should the leaving-air temperature rise above the maximum allowable temperature, the limit switch opens and the control circuit “breaks.” Any interruption in the control circuit instantly closes the gas valve and stops gas flow to the burners. The blower motor continues to run until LS resets.

When the air temperature at the limit switch drops to the low-temperature setting of the limit switch, the switch closes and completes the control circuit. The direct-spark ignition system cycles and the unit returns to normal heating operation.

Table 6 – LED Indications

Status Code	LED Indication
Normal Operation*2	On
No Power or Hardware Failure	Off
Check fuse, low voltage circuit	1 Flash
Limit Switch Fault	2 Flashes
Flame Sense Fault	3 Flashes
Four Consecutive Limit Switch Faults	4 Flashes
Ignition Lockout Fault	5 Flashes
Pressure Switch Fault	6 Flashes
Burner Thermal Switch Fault (Ultra Low NOx models)	7 Flashes
Internal Control Fault	8 Flashes
Temporary 1 hr auto reset†	9 Flashes

*. LED indicates acceptable operation. Do not change ignition control board.
†. This code indicates an internal processor fault that will reset itself in one hr. Fault can be caused by stray RF signals in the structure or nearby. This is a UL requirement.

NOTES:
1. When W is energized the burners will remain on for a minimum of 60 sec.
2. If more than one error code exists they will be displayed on the LED in sequence.

Burner Thermal Switch (Ultra Low NOx)

The Burner Thermal Switch (BTS) is used on Ultra Low NOx units and is located on top of the burner box. (See Fig. 20.) The BTS switch functions similar to a rollout switch but also provides protection against a blocked burner. The BTS switch has the same FAULT CODE (7 flashes) on the ignition board as a rollout switch found on standard Low NOx units.

Step 3 – Start-up Cooling and Make Adjustments

Complete the required procedures given in the Pre-Start-Up section before starting the unit. Do not jumper any safety devices when operating the unit. Do not operate the compressor when the outdoor temperature is below 40°F (4.4°C) (unless accessory low-ambient kit is installed). Do not rapid-cycle the compressor. Allow 5 minutes between on cycles to prevent compressor damage.

Checking Cooling Control Operation

Start and check the unit for proper cooling control operation as follows:

1. Place room thermostat SYSTEM switch in OFF position. Observe that blower motor starts when FAN switch is placed in ON position and shuts down when FAN switch is placed in AUTO position.
2. Place SYSTEM switch in COOL position and FAN switch in AUTO position. Set cooling control below room temperature. Observe that compressor, condenser fan, and evaporator blower motors start. Observe that cooling cycle shuts down when control setting is satisfied. The evaporator fan will continue to run for 60 sec.
3. When using an auto-changeover room thermostat, place both SYSTEM and FAN switches in AUTO positions. Observe that unit operates in Heating mode when temperature control is set to call for heating (above room temperature) and operates in Cooling mode when temperature control is set to call for cooling (below room temperature).

IMPORTANT: Three-phase, scroll compressors are direction oriented. Unit must be checked to ensure proper compressor 3-phase power lead orientation. If not corrected within 5 minutes, the internal protector will shut off the compressor. The 3-phase power leads to the unit must be reversed to correct rotation. When turning backwards, the difference between compressor suction and discharge pressures will be minimal.

Checking and Adjusting Refrigerant Charge

The refrigerant system is fully charged with Puron (R-410A) refrigerant and is tested and factory sealed. Allow system to operate a minimum of 15 minutes before checking or adjusting charge.

WARNING

EXPLOSION HAZARD

Failure to follow this warning could result in death, serious personal injury, and/or property damage.

Never use air or gases containing oxygen for leak testing or operating refrigerant compressors. Pressurized mixtures of air or gases containing oxygen can lead to an explosion.

NOTE: Adjustment of the refrigerant charge is not required unless the unit is suspected of not having the proper Puron (R-410A) charge.

NOTE: Some units have fixed orifice refrigerant metering devices. There is a different charging procedure for both expansion devices. Refer to the correct procedure for your unit.

The charging label and the tables shown refer to system temperatures and pressures in cooling mode only. A refrigerant charging label is attached to the inside of the compressor access panel. (See Table 8 Subcool chart for units with TXV and superheat chart for units with fixed orifice.) The chart includes the required liquid line temperature at given discharge line pressures and outdoor ambient temperatures.

A superheat chart is attached to the inside of the compressor access panel for the unit with fixed metering device. Refer to the charging procedure on the label.

An accurate thermocouple- or thermistor-type thermometer, and a gauge manifold are required when using the subcooling charging method for evaluating the unit charge. Do not use mercury or small dial-type thermometers because they are not adequate for this type of measurement.

CAUTION

UNIT DAMAGE HAZARD

Failure to follow this caution may result in unit damage.

When evaluating the refrigerant charge, an indicated adjustment to the specified factory charge must always be very minimal. If a substantial adjustment is indicated, an abnormal condition exists somewhere in the cooling system, such as insufficient airflow across either coil or both coils.

Proceed as follows:

1. Remove caps from low- and high-pressure service fittings.
2. Using hoses with valve core depressors, attach low- and high-pressure gauge hoses to low- and high-pressure service fittings, respectively.
3. Start unit in Cooling Mode and let unit run until system pressures stabilize.
4. Measure and record the following:
   a. Outdoor ambient-air temperature (°F [°C] db).
   b. Liquid line temperature (°F [°C]).
   c. Discharge (high-side) pressure (psig).
   d. Suction (low-side) pressure (psig) (for reference only).
5. Using "Cooling Charging Charts," compare outdoor-air temperature (°F [°C] db) with the discharge line pressure (psig) to determine desired system operating liquid line temperature (See Table 8).
6. Compare actual liquid line temperature with desired liquid line temperature. Using a tolerance of ± 2°F (±1.1°C), add refrigerant if actual temperature is more than 2°F (1.1°C) higher than proper liquid line temperature, or remove refrigerant if actual temperature is more than 2°F (1.1°C) lower than required liquid line temperature.

NOTE: If the problem causing the inaccurate readings is a refrigerant leak, refer to the Check for Refrigerant Leaks section.

Indoor Airflow and Airflow Adjustments

CAUTION

UNIT OPERATION HAZARD

Failure to follow this caution may result in unit damage.

For cooling operation, the recommended airflow is 350 to 450 cfm for each 12,000 Btuh of rated cooling capacity. For heating operation, the airflow must produce a temperature rise that falls within the range stamped on the unit rating plate.

NOTE: Be sure that all supply-and return-air grilles are open, free from obstructions, and adjusted properly.

WARNING

ELECTRICAL SHOCK HAZARD

Failure to follow this warning could result in personal injury or death.

Disconnect electrical power to the unit and install lockout tag before changing blower speed

This unit has independent fan speeds for gas heating and cooling modes. All models also have a dedicated continuous fan speed. All models (1 phase and 3 phase), have a field-selectable capability to run two different cooling speeds: A normal cooling fan speed (350-450 CFM/Ton) and an enhanced dehumidification fan speed (As low as 320 CFM/Ton) for use with either a dehumidistat or a thermostat that supports dehumidification.

This unit is factory-set for use with a single cooling fan speed. For single phase models, the cooling speed is marked "COOL" on the IGC (See Fig. 19). The factory-shipped settings are noted in Table 9. There are up to 3 additional speed tap wires available for use in either gas heating mode, cooling mode, or continuous fan mode (For color coding on the indoor fan motor leads, see Table 7). For single phase models, one of the additional speed tap wires is connected to the continuous fan, with the other 2 wires shipped loose in the control box near the IGC. For three phase models, the additional 3 speed tap wires are shipped loose with vinyl caps and are located in the control box near the interface fan board (IFB) (See Fig. 19).

Gas Heating Fan Speed Set-up:

To change the gas heating speed:

1. Remove existing speed tap wire from the "HEAT" terminal on the IGC.
2. Connect the desired speed tap wire on the "HEAT" terminal on the IGC board. Make sure that the speed chosen delivers temperature rise within the rise range listed on the unit. "High" fan speed is for high static cooling only and must not be used for gas heating speed.

Cooling Fan Speed Set-up (Dehumidification feature not used) (Single Phase Models):

To change cooling speed:

1. Remove existing speed tap wire from the "COOL" terminal on the IGC board. Add the wet coil pressure drop in Table 11 to the system static to determine the correct cooling airflow speed in Table 7 that will deliver the nominal cooling airflow listed in Table 1 for each size.
2. Connect the desired speed tap wire on the "COOL" terminal on the IGC board.

Dehumidification Cooling Fan Speed Set-up:

IMPORTANT: Dehumidification control must open control circuit on humidity rise above set point.

Use of the dehumidification cooling fan speed requires use of either a 24 VAC dehumidistat or a thermostat which includes control of a 24 VAC dehumidistat connection. In either case, the dehumidification control must open the control circuit on humidity rise above the dehumidification set point.

1. Move shunt jumper on IGC board to "DH" (See Fig. 19).
2. Refer to airflow table (Table 9) to determine allowable speeds for the dehumidification cooling fan speed. Speeds that are not allowed are shaded in Table 9.
3. Connect selected speed tap wire to "DHUM" terminal on the IGC board. Verify that static pressure is in the acceptable range for the speed tap to be used for dehumidification cooling.

Continuous Fan Speed Set-up:

To change continuous fan speed:

1. Remove existing speed tap wire from the "FAN" terminal on the IGC.
2. Connect the desired speed tap wire on the "FAN" terminal on the IGC board.

Table 7 – Color Coding for Indoor Fan Motor Leads

Black = High Speed
Orange = Med-High Speed
Red = Med Speed
Pink = Med-Low Speed
Blue = Low Speed

Cooling Sequence of Operation

With the room thermostat SYSTEM switch in the COOL position and the FAN switch in the AUTO position, the cooling sequence of operation is as follows:

1. When the room temperature rises to a point that is slightly above the cooling control setting of the thermostat, the thermostat completes the circuit between thermostat terminal R to terminals Y and G.
2. The normally open contacts of energized contactor (C) close and complete the circuit through compressor motor (COMP) to condenser (outdoor) fan motor (OFM). Both motors start instantly.
3. The set of normally open contacts on the interface fan board (IFB) are closed which energizes a circuit to the indoor fan motor (IFM).

NOTE: Once the compressor has started and then stopped, it should not be started again until 5 minutes have elapsed. The cooling cycle remains on until the room temperature drops to a point that is slightly below the cooling control setting of the room thermostat. At this point, the thermostat breaks the circuit between thermostat terminal R to terminals Y and G. These open circuits deenergize contactor coil C. The condenser and compressor motors stop. After a 60-sec. delay, the blower motor stops. The unit is in a standby condition, waiting for the next call for cooling from the room thermostat.

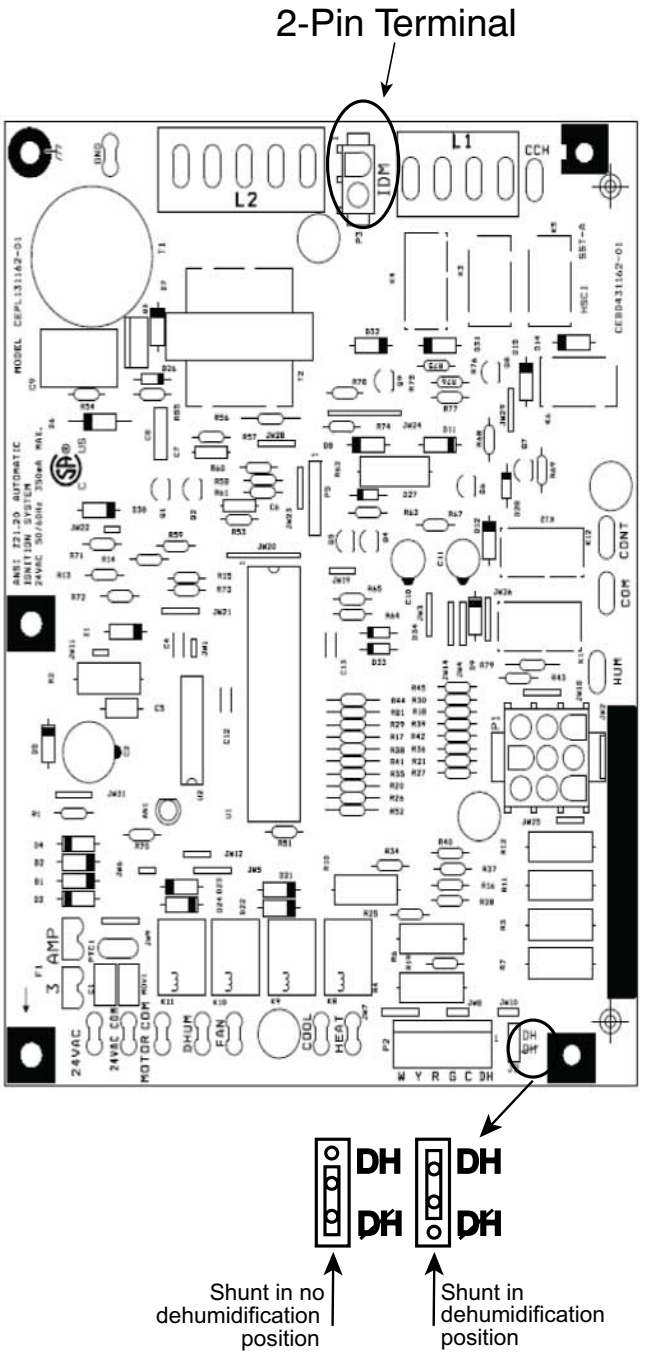

Fig. 19 – Ultra Low NOx Single Phase IGC Board

Table 8 – Cooling Charging Chart

SUPERHEAT CHARGING TABLE
(SUPERHEAT °F (°C) AT COMPRESSOR SUCTION SERVICE PORT)

OUTDOOR TEMP °F (°C)	EVAPORATOR ENTERING AIR °F (°C) WB													
	50 (10)	52 (11)	54 (12)	56 (13)	58 (14)	60 (16)	62 (17)	64 (18)	66 (19)	68 (20)	70 (21)	72 (22)	74 (23)	76 (24)
55 (12.7)	9 (5.0)	12 (6.7)	14 (7.8)	17 (9.4)	20 (11)	23 (13)	26 (14)	29 (16)	32 (18)	35 (19)	37 (21)	40 (22)	42 (23)	45 (25)
60 (15.6)	7 (3.9)	10 (5.6)	12 (6.7)	15 (8.3)	18 (10)	21 (12)	24 (13)	27 (15)	30 (17)	33 (18)	35 (19)	38 (21)	40 (22)	43 (24)
65 (18.3)	--	6 (3.3)	10 (5.6)	13 (7.2)	16 (8.9)	19 (11)	21 (12)	24 (13)	27 (15)	30 (17)	33 (18)	36 (20)	38 (21)	41 (23)
70 (21.1)	--	–	7 (3.9)	10 (5.6)	13 (7.2)	16 (8.9)	19 (11)	21 (12)	24 (13)	27 (15)	30 (17)	33 (18)	36 (20)	39 (22)
75 (23.9)	--	–	–	6 (3.3)	9 (5.0)	12 (6.7)	15 (8.3)	18 (10)	21 (12)	24 (13)	28 (16)	31 (17)	34 (19)	37 (21)
80 (26.7)	--	–	–	--	5 (2.8)	8 (4.4)	12 (6.7)	15 (8.3)	18 (10)	21 (12)	25 (14)	28 (16)	31 (17)	35 (19)
85 (29.4)	--	–	–	--	--	--	8 (4.4)	11 (6.1)	15 (8.3)	19 (11)	22 (12)	26 (14)	30 (17)	33 (18)
90 (32.2)	--	–	–	--	--	--	5 (2.8)	9 (5.0)	13 (7.2)	16 (8.9)	20 (11)	24 (13)	27 (15)	31 (17)
95 (35.0)	--	–	–	--	--	--	–	6 (3.3)	10 (5.6)	14 (7.8)	18 (10)	22 (12)	25 (14)	29 (16)
100 (37.7)	--	–	–	--	--	--	–	–	8 (4.4)	12 (6.7)	15 (8.3)	20 (11)	23 (13)	27 (15)
105 (40.6)	--	–	–	--	--	--	–	–	5 (2.8)	9 (5.0)	13 (7.2)	17 (9.4)	22 (12)	26 (14)
110 (43.3)	--	–	–	--	--	--	–	–	--	6 (3.3)	11 (6.1)	15 (8.3)	20 (11)	25 (14)
115 (46.1)	--	–	–	--	--	--	–	–	--	--	8 (4.4)	14 (7.8)	18 (10)	23 (13)

REQUIRED SUCTION TUBE TEMPERATURE °F (°C)
(MEASURED AT COMPRESSOR SUCTION SERVICE PORT)

SUPERHEAT TEMP °F (°C)	SUCTION PRESSURE AT SUCTION SERVICE PORT PSIG (kPa)								
	107 (738)	111 (766)	116 (800)	120 (828)	125 (862)	130 (897)	135 (931)	140 (966)	145 (1000)
0 (0)	35 (1.7)	37 (2.8)	39 (3.9)	41 (5.0)	43 (6.1)	45 (7.2)	47 (8.3)	49 (9.4)	51 (11)
2 (1.1)	37 (2.8)	39 (3.9)	41 (5.0)	43 (6.1)	45 (7.2)	47 (8.3)	49 (9.4)	51 (11)	53 (12)
4 (2.2)	39 (3.9)	41 (5.0)	43 (6.1)	45 (7.2)	47 (8.3)	49 (9.4)	51 (11)	53 (12)	55 (13)
6 (3.3)	41 (5.0)	43 (6.1)	45 (7.2)	47 (8.3)	49 (9.4)	51 (11)	53 (12)	55 (13)	57 (14)
8 (4.4)	43 (6.1)	45 (7.2)	47 (8.3)	49 (9.4)	51 (11)	53 (12)	55 (13)	57 (14)	59 (15)
10 (5.6)	45 (7.2)	47 (8.3)	49 (9.4)	51 (11)	53 (12)	55 (13)	57 (14)	59 (15)	61 (16)
12 (6.7)	47 (8.3)	49 (9.4)	51 (11)	53 (12)	55 (13)	57 (14)	59 (15)	61 (16)	63 (17)
14 (7.8)	49 (9.4)	51 (11)	53 (12)	55 (13)	57 (14)	59 (15)	61 (16)	63 (17)	65 (18)
16 (8.9)	51 (11)	53 (12)	55 (13)	57 (14)	59 (15)	61 (16)	63 (17)	65 (18)	67 (19)
18 (10.0)	53 (12)	55 (13)	57 (14)	59 (15)	61 (16)	63 (17)	65 (18)	67 (19)	69 (21)
20 (11.1)	55 (13)	57 (14)	59 (15)	61 (16)	63 (17)	65 (18)	67 (19)	69 (21)	71 (22)
22 (12.2)	57 (14)	59 (15)	61 (16)	63 (17)	65 (18)	67 (19)	69 (21)	71 (22)	73 (23)
24 (13.3)	59 (15)	61 (16)	63 (17)	65 (18)	67 (19)	69 (21)	71 (22)	73 (23)	75 (24)
26 (14.4)	61 (16)	63 (17)	65 (18)	67 (19)	69 (21)	71 (22)	73 (23)	75 (24)	77 (25)
28 (15.6)	63 (17)	65 (18)	67 (19)	69 (21)	71 (22)	73 (23)	75 (24)	77 (25)	79 (26)
30 (16.7)	65 (18)	67 (19)	69 (21)	71 (22)	73 (23)	75 (24)	77 (25)	79 (26)	81 (27)
32 (17.8)	67 (19)	69 (21)	71 (22)	73 (23)	75 (24)	77 (25)	79 (26)	81 (27)	83 (28)
34 (18.9)	69 (21)	71 (22)	73 (23)	75 (24)	79 (26)	79 (26)	81 (27)	83 (28)	85 (29)
36 (20.0)	71 (22)	73 (23)	75 (24)	81 (27)	81 (27)	81 (27)	83 (28)	85 (29)	87 (31)
38 (21.1)	73 (23)	75 (24)	83 (28)	83 (28)	83 (28)	83 (28)	85 (29)	87 (31)	89 (32)
40 (22.2)	75 (24)	85 (29)	85 (29)	85 (29)	85 (29)	85 (29)	87 (31)	89 (32)	91 (33)

50ZH500518 REV. A

COOLING ONLY CHARGING PROCEDURE

1. Operate unit a minimum of 10 minutes before checking charge.
2. Measure suction pressure by attaching an accurate gauge to compressor suction side service port.
3. Measure suction side temperature by attaching an accurate thermisitor type or electronic thermometer to suction line about 10 inches from compressor.
4. Measure outdoor air dry-bulb temperature with thermometer.
5. Measure indoor air (return air) wet-bulb temperature with a sling psychrometer or electronic equivalent.
6. Using Superheat Charging Table find outdoor temperature and indoor air wet-bulb temperature. At this intersection note superheat. Where a dash (--) appears on table do not attempt to charge unit under these conditions or refrigerant slugging may occur. In this situation refrigerant must be evacuated and weighed in. See rating plate for charge quantity.
7. Refer to Required Suction Tube Temp. table. Find superheat temperature located in step 6 and suction pressure. At this intersection note suction line temperature.
8. If unit has a higher suction line temperature than charted temperature, add refrigerant until charted temperature is reached.
9. If unit has a lower suction line temperature than charted temperature, reclaim refrigerant until charted temperature is reached.
10. If outdoor air temperature or pressure at suction port changes, charge to new suction line temperature indicated on chart.

50ZH500518 REV. A

Superheat charging table is derived from optimum performance point. (95°F [35°C] outdoor ambient and (80°F [27°C] dry bulb; 67°F [19°C] wet bulb indoor condition.) Where a dash(--) appears do not attempt to check charge or charge unit under these conditions using the superheat method. (Weigh in method should be used.)

A150625

Required Subcooling °F(°C)

Model Size	Outdoor Ambient Temperature °F(°C)				
	75 (24)	85 (29)	95 (35)	105 (41)	115 (46)
036	13 (7)	13 (7.2)	13 (7.3)	13(7.4)	14(7.7)

Charging Procedure

1- Measure Discharge line pressure by attaching a gauge to the service port.

2- Measure the Liquid line temperature by attaching a temperature sensing device to it.

3- Insulate the temperature sensing device so that the Outdoor Ambient doesn't affect the reading.

4- Refer to the required Subcooling in the table based on the model size and the Outdoor Ambient temperature.

5- Interpolate if the Outdoor ambient temperature lies in between the table values.

6- Find the Pressure Value in the table corresponding to the the measured Pressure of the Compressor Discharge line.

7- Read across from the Pressure reading to obtain the Liquid line temperature for a required Subcooling

8- Add Charge if the measured temperature is higher than the table value.

9 - Remove charge if the measured temperature is lower than the table value.

50VL500709 REV. -

Required Liquid Line Temperature for a Specific Subcooling (R-410A)

Pressure (psig)	Required Subcooling (°F) 5	10	15	20	25	Pressure (kPa)	Required Subcooling (°C) 3	6	8	11	14
189	61	56	51	46	41	1303	16	13	11	8	5
196	63	58	53	48	43	1351	17	15	12	9	6
203	66	61	56	51	46	1399	19	16	13	10	8
210	68	63	58	53	48	1448	20	17	14	11	9
217	70	65	60	55	50	1496	21	18	15	13	10
224	72	67	62	57	52	1544	22	19	16	14	11
231	74	69	64	59	54	1593	23	20	18	15	12
238	76	71	66	61	56	1641	24	21	19	16	13
245	77	72	67	62	57	1689	25	22	20	17	14
252	79	74	69	64	59	1737	26	23	21	18	15
260	81	76	71	66	61	1792	27	25	22	19	16
268	83	78	73	68	63	1848	29	26	23	20	17
276	85	80	75	70	65	1903	30	27	24	21	19
284	87	82	77	72	67	1958	31	28	25	22	20
292	89	84	79	74	69	2013	32	29	26	23	21
300	91	86	81	76	71	2068	33	30	27	24	22
309	93	88	83	78	73	2130	34	31	28	26	23
318	95	90	85	80	75	2192	35	32	29	27	24
327	97	92	87	82	77	2254	36	33	31	28	25
336	99	94	89	84	79	2316	37	34	32	29	26
345	101	96	91	86	81	2378	38	35	33	30	27
354	103	98	93	88	83	2440	39	36	34	31	28
364	105	100	95	90	85	2509	40	38	35	32	29
374	107	102	97	92	87	2578	41	39	36	33	30
384	108	103	98	93	88	2647	42	40	37	34	31
394	110	105	100	95	90	2716	44	41	38	35	32
404	112	107	102	97	92	2785	45	42	39	36	33
414	114	109	104	99	94	2854	46	43	40	37	34
424	116	111	106	101	96	2923	47	44	41	38	35
434	118	113	108	103	98	2992	48	45	42	39	36
444	119	114	109	104	99	3061	48	46	43	40	37
454	121	116	111	106	101	3130	49	47	44	41	38
464	123	118	113	108	103	3199	50	48	45	42	39
474	124	119	114	109	104	3268	51	48	46	43	40
484	126	121	116	111	106	3337	52	49	47	44	41
494	127	122	117	112	107	3406	53	50	47	45	42
504	129	124	119	114	109	3475	54	51	48	46	43
514	131	126	121	116	111	3544	55	52	49	46	44
524	132	127	122	117	112	3612	56	53	50	47	45
534	134	129	124	119	114	3681	56	54	51	48	45

50VL500709 REV. -

To properly check or adjust charge, conditions must be favorable for subcooling charging. Favorable conditions exist when the outdoor temperature is between 75°F to 115°F (24°C and 46°C), and the indoor temperature is between 70°F and 80°F (21°C and 27°C). Follow the procedure above.

A150626

Table 9 – Dry Coil Air Delivery* - Horizontal and Downflow Discharge Sizes 24-60 208/230VAC - 1 & 3 Phase

Unit Size	Heating Rise °F (°C)	Motor Speed	Tap	Allowable Functions	ESP (in. W.C.)	0.1	0.2	0.3	0.4	0.5	0.6	0.7	0.8	0.9	1
24040	25 - 55 (14 - 31)	Low†	Blue	Alternate Heating	CFM	654	552	454	338	x	x	x	x	x	x
					BHP	0.09	0.10	0.10	0.11	x	x	x	x	x	x
					Gas Heat Rise (°F)	45	54	NA	NA	NA	NA	NA	NA	NA	NA
					Gas Heat Rise (°C)	25	30	NA	NA	NA	NA	NA	NA	NA	NA
		Med-Low**	Pink	Heating Alternate Cooling	CFM	840	759	677	600	505	411	293	x	x	x
					BHP	0.14	0.15	0.16	0.16	0.17	0.17	0.18	x	x	x
					Gas Heat Rise (°F)	35	39	44	50	NA	NA	NA	NA	NA	NA
					Gas Heat Rise (°C)	20	22	24	28	NA	NA	NA	NA	NA	NA
		Medium‡	Red	Cooling Alternate Heating	CFM	888	818	750	679	606	511	425	320	238	x
					BHP	0.18	0.18	0.19	0.19	0.20	0.20	0.21	0.21	0.22	x
					Gas Heat Rise (°F)	34	36	40	44	49	NA	NA	NA	NA	NA
					Gas Heat Rise (°C)	19	20	22	24	27	NA	NA	NA	NA	NA
		Med-High	Orange	Alternate Cooling Alternate Heating	CFM	1133	1069	995	930	854	784	701	628	549	464
					BHP	0.26	0.27	0.28	0.29	0.30	0.30	0.31	0.31	0.32	0.33
					Gas Heat Rise (°F)	26	28	30	32	35	38	42	47	54	NA
					Gas Heat Rise (°C)	15	15	17	18	19	21	24	26	30	NA
		High	Black	High Static Cooling Only	CFM	1291	1241	1190	1131	1081	1028	949	854	742	616
					BHP	0.41	0.42	0.43	0.43	0.44	0.45	0.44	0.42	0.40	0.38
24060	25 - 55 (14 - 31)	Low†	Blue		CFM	654	552	454	338	x	x	x	x	x	x
					BHP	0.09	0.10	0.10	0.11	x	x	x	x	x	x
					Gas Heat Rise (°F)	NA	NA	NA	NA	NA	NA	NA	NA	NA	NA
					Gas Heat Rise (°C)	NA	NA	NA	NA	NA	NA	NA	NA	NA	NA
		Med-Low	Pink	Alternate Cooling Alternate Heating	CFM	840	759	677	600	505	411	293	x	x	x
					BHP	0.14	0.15	0.16	0.16	0.17	0.17	0.18	x	x	x
					Gas Heat Rise (°F)	53	NA	NA	NA	NA	NA	NA	NA	NA	NA
					Gas Heat Rise (°C)	30	NA	NA	NA	NA	NA	NA	NA	NA	NA
		Medium‡	Red	Cooling Alternate Heating	CFM	888	818	750	679	606	511	425	320	238	x
					BHP	0.18	0.18	0.19	0.19	0.20	0.20	0.21	0.21	0.22	x
					Gas Heat Rise (°F)	50	55	NA	NA	NA	NA	NA	NA	NA	NA
					Gas Heat Rise (°C)	28	30	NA	NA	NA	NA	NA	NA	NA	NA
		Med-High**	Orange	Heating Alternate Cooling	CFM	1133	1069	995	930	854	784	701	628	549	464
					BHP	0.26	0.27	0.28	0.29	0.30	0.30	0.31	0.31	0.32	0.33
					Gas Heat Rise (°F)	40	42	45	48	53	NA	NA	NA	NA	NA
					Gas Heat Rise (°C)	22	23	25	27	29	NA	NA	NA	NA	NA
		High	Black	High Static Cooling Only	CFM	1291	1241	1190	1131	1081	1028	949	854	742	616
					BHP	0.41	0.42	0.43	0.43	0.44	0.45	0.44	0.42	0.40	0.38
30040	25 - 55 (14 - 31)	Low†	Blue	Alternate Heating	CFM	654	552	454	338	x	x	x	x	x	x
					BHP	0.09	0.10	0.10	0.11	x	x	x	x	x	x
					Gas Heat Rise (°F)	45	54	NA	NA	NA	NA	NA	NA	NA	NA
					Gas Heat Rise (°C)	25	30	NA	NA	NA	NA	NA	NA	NA	NA
		Med-Low**	Pink	Heating Alternate Cooling	CFM	840	759	677	600	505	411	293	x	x	x
					BHP	0.14	0.15	0.16	0.16	0.17	0.17	0.18	x	x	x
					Gas Heat Rise (°F)	35	39	44	50	NA	NA	NA	NA	NA	NA
					Gas Heat Rise (°C)	20	22	24	28	NA	NA	NA	NA	NA	NA
		Medium‡	Red	Cooling Alternate Heating	CFM	1104	1038	979	915	844	782	712	639	532	452
					BHP	0.26	0.27	0.28	0.28	0.29	0.30	0.30	0.31	0.31	0.32
					Gas Heat Rise (°F)	27	29	30	33	35	38	42	47	NA	NA
					Gas Heat Rise (°C)	15	16	17	18	20	21	23	26	NA	NA
		Med-High	Orange	Alternate Cooling Alternate Heating	CFM	1133	1069	995	930	854	784	701	628	549	464
					BHP	0.26	0.27	0.28	0.29	0.30	0.30	0.31	0.31	0.32	0.33
					Gas Heat Rise (°F)	26	28	30	32	35	38	42	47	54	NA
					Gas Heat Rise (°C)	15	15	17	18	19	21	24	26	30	NA
		High	Black	High Static Cooling Only	CFM	1291	1241	1190	1131	1081	1028	949	854	742	616
					BHP	0.41	0.42	0.43	0.43	0.44	0.45	0.44	0.42	0.40	0.38

Table 9 – Dry Coil Air Delivery* - Horizontal and Downflow Discharge Sizes 24-60 208/230VAC - 1 & 3 Phase (Continued)

Unit Size	Heating Rise °F (°C)	Motor Speed	Tap	Allowable Functions	ESP (in. W.C.)	0.1	0.2	0.3	0.4	0.5	0.6	0.7	0.8	0.9	1
30060	25 - 55 (14 - 31)	Low†	Blue		CFM	654	552	454	338	x	x	x	x	x	x
					BHP	0.09	0.10	0.10	0.11	x	x	x	x	x	x
					Gas Heat Rise (°F)	NA	NA	NA	NA	NA	NA	NA	NA	NA	NA
					Gas Heat Rise (°C)	NA	NA	NA	NA	NA	NA	NA	NA	NA	NA
		Med-Low	Pink	Alternate Cooling Alternate Heating	CFM	840	759	677	600	505	411	293	x	x	x
					BHP	0.14	0.15	0.16	0.16	0.17	0.17	0.18	x	x	x
					Gas Heat Rise (°F)	53	NA	NA	NA	NA	NA	NA	NA	NA	NA
					Gas Heat Rise (°C)	30	NA	NA	NA	NA	NA	NA	NA	NA	NA
		Medium‡	Red	Cooling Alternate Heating	CFM	1104	1038	979	915	844	782	712	639	532	452
					BHP	0.26	0.27	0.28	0.28	0.29	0.30	0.30	0.31	0.31	0.32
					Gas Heat Rise (°F)	41	43	46	49	53	NA	NA	NA	NA	NA
					Gas Heat Rise (°C)	23	24	25	27	30	NA	NA	NA	NA	NA
		Med-High**	Orange	Heating Alternate Cooling	CFM	1133	1069	995	930	854	784	701	628	549	464
					BHP	0.26	0.27	0.28	0.29	0.30	0.30	0.31	0.31	0.32	0.33
					Gas Heat Rise (°F)	40	42	45	48	53	NA	NA	NA	NA	NA
					Gas Heat Rise (°C)	22	23	25	27	29	NA	NA	NA	NA	NA
		High	Black	High Static Cooling Only	CFM	1291	1241	1190	1131	1081	1028	949	854	742	616
					BHP	0.41	0.42	0.43	0.43	0.44	0.45	0.44	0.42	0.40	0.38
36060	25 - 55 (14 - 31)	Low†	Blue		CFM	650	587	517	442	381	320	259	x	x	x
					BHP	0.08	0.08	0.09	0.09	0.10	0.10	0.11	x	x	x
					Gas Heat Rise (°F)	NA	NA	NA	NA	NA	NA	NA	NA	NA	NA
					Gas Heat Rise (°C)	NA	NA	NA	NA	NA	NA	NA	NA	NA	NA
		Med-Low**	Pink	Heating Alternate Cooling	CFM	1144	1105	1066	1026	984	941	895	850	806	763
					BHP	0.28	0.28	0.29	0.30	0.31	0.31	0.32	0.33	0.34	0.34
					Gas Heat Rise (°F)	39	41	42	44	46	48	50	53	NA	NA
					Gas Heat Rise (°C)	22	23	23	24	25	26	28	29	NA	NA
		Medium‡	Red	Cooling Alternate Heating	CFM	1223	1186	1151	1115	1075	1039	1001	957	914	870
					BHP	0.34	0.34	0.35	0.36	0.37	0.37	0.38	0.39	0.40	0.41
					Gas Heat Rise (°F)	37	38	39	40	42	43	45	47	49	52
					Gas Heat Rise (°C)	20	21	22	22	23	24	25	26	27	29
		Med-High	Orange	Alternate Cooling	CFM	1356	1321	1288	1251	1216	1181	1149	1109	1071	1034
					BHP	0.43	0.44	0.45	0.46	0.46	0.47	0.48	0.49	0.50	0.51
					Gas Heat Rise (°F)	NA	NA	NA	NA	NA	NA	NA	NA	NA	NA
					Gas Heat Rise (°C)	NA	NA	NA	NA	NA	NA	NA	NA	NA	NA
		High	Black	High Static Cooling Only	CFM	1520	1487	1459	1429	1394	1364	1331	1295	1261	1225
					BHP	0.60	0.60	0.61	0.62	0.63	0.64	0.65	0.66	0.66	0.67
42060	25 - 55 (14 - 31)	Low†	Blue	Alternate Heating	CFM	1001	902	833	777	717	650	575	527	466	419
					BHP	0.13	0.13	0.14	0.14	0.15	0.16	0.17	0.18	0.19	0.20
					Gas Heat Rise (°F)	45	50	54	NA	NA	NA	NA	NA	NA	NA
					Gas Heat Rise (°C)	25	28	30	NA	NA	NA	NA	NA	NA	NA
		Med-Low**	Pink	Heating	CFM	1016	950	902	842	783	721	655	590	541	480
					BHP	0.13	0.14	0.15	0.16	0.17	0.18	0.19	0.20	0.21	0.22
					Gas Heat Rise (°F)	44	47	50	53	NA	NA	NA	NA	NA	NA
					Gas Heat Rise (°C)	25	26	28	30	NA	NA	NA	NA	NA	NA
		Medium‡	Red	Cooling Alternate Heating	CFM	1403	1358	1316	1265	1217	1167	1116	1067	1012	956
					BHP	0.29	0.30	0.31	0.33	0.34	0.35	0.36	0.37	0.38	0.39
					Gas Heat Rise (°F)	32	33	34	35	37	38	40	42	44	47
					Gas Heat Rise (°C)	18	18	19	20	20	21	22	23	25	26
		Med-High	Orange	Alternate Cooling Alternate Heating	CFM	1461	1411	1367	1327	1275	1220	1174	1127	1074	1022
					BHP	0.32	0.33	0.35	0.36	0.37	0.38	0.39	0.40	0.41	0.42
					Gas Heat Rise (°F)	31	32	33	34	35	37	38	40	42	44
					Gas Heat Rise (°C)	17	18	18	19	20	20	21	22	23	24
		High	Black	High Static Cooling Only	CFM	1575	1528	1488	1447	1406	1360	1314	1264	1213	1159
					BHP	0.40	0.42	0.43	0.44	0.45	0.46	0.47	0.48	0.49	0.50

Table 9 – Dry Coil Air Delivery* - Horizontal and Downflow Discharge Sizes 24-60 208/230VAC - 1 & 3 Phase (Continued)

Unit Size	Heating Rise °F (°C)	Motor Speed	Tap	Allowable Functions	ESP (in. W.C.)	0.1	0.2	0.3	0.4	0.5	0.6	0.7	0.8	0.9	1
42090	35 - 65 (19 - 36)	Low†	Blue		CFM	1001	902	833	777	717	650	575	527	466	419
					BHP	0.13	0.13	0.14	0.14	0.15	0.16	0.17	0.18	0.19	0.20
					Gas Heat Rise (°F)	NA	NA	NA	NA	NA	NA	NA	NA	NA	NA
					Gas Heat Rise (°C)	NA	NA	NA	NA	NA	NA	NA	NA	NA	NA
		Med-Low	Pink		CFM	1016	950	902	842	783	721	655	590	541	480
					BHP	0.13	0.14	0.15	0.16	0.17	0.18	0.19	0.20	0.21	0.22
					Gas Heat Rise (°F)	NA	NA	NA	NA	NA	NA	NA	NA	NA	NA
					Gas Heat Rise (°C)	NA	NA	NA	NA	NA	NA	NA	NA	NA	NA
		Medium‡	Red	Cooling Alternate Heating	CFM	1403	1358	1316	1265	1217	1167	1116	1067	1012	956
					BHP	0.29	0.30	0.31	0.33	0.34	0.35	0.36	0.37	0.38	0.39
					Gas Heat Rise (°F)	48	50	51	53	56	58	61	63	NA	NA
					Gas Heat Rise (°C)	27	28	29	30	31	32	34	35	NA	NA
		Med-High**	Orange	Heating Alternate Cooling	CFM	1461	1411	1367	1327	1275	1220	1174	1127	1074	1022
					BHP	0.32	0.33	0.35	0.36	0.37	0.38	0.39	0.40	0.41	0.42
					Gas Heat Rise (°F)	46	48	49	51	53	55	58	60	63	NA
					Gas Heat Rise (°C)	26	27	27	28	29	31	32	33	35	NA
		High	Black	High Static Cooling Only	CFM	1575	1528	1488	1447	1406	1360	1314	1264	1213	1159
					BHP	0.40	0.42	0.43	0.44	0.45	0.46	0.47	0.48	0.49	0.50
48090	35 - 65 (19 - 36)	Low†	Blue		CFM	644	552	461	376	301	235	x	x	x	x
					BHP	0.06	0.07	0.07	0.08	0.08	0.09	x	x	x	x
					Gas Heat Rise (°F)	NA	NA	NA	NA	NA	NA	NA	NA	NA	NA
					Gas Heat Rise (°C)	NA	NA	NA	NA	NA	NA	NA	NA	NA	NA
		Med-Low**	Pink	Heating Alternate Cooling	CFM	1430	1386	1347	1302	1258	1208	1160	1114	1065	1014
					BHP	0.26	0.27	0.28	0.29	0.30	0.30	0.32	0.33	0.34	0.35
					Gas Heat Rise (°F)	47	49	50	52	54	56	58	61	64	NA
					Gas Heat Rise (°C)	26	27	28	29	30	31	32	34	35	NA
		Medium‡	Red	Cooling Alternate Heating	CFM	1658	1622	1585	1549	1512	1476	1442	1402	1360	1322
					BHP	0.39	0.40	0.41	0.42	0.44	0.45	0.46	0.47	0.48	0.49
					Gas Heat Rise (°F)	41	42	43	44	45	46	47	48	50	51
					Gas Heat Rise (°C)	23	23	24	24	25	25	26	27	28	28
		Med-High	Orange	Alternate Cooling	CFM	1945	1913	1867	1829	1792	1758	1717	1688	1645	1603
					BHP	0.58	0.59	0.61	0.63	0.64	0.65	0.67	0.68	0.69	0.71
					Gas Heat Rise (°F)	NA	NA	NA	NA	NA	NA	NA	NA	NA	NA
					Gas Heat Rise (°C)	NA	NA	NA	NA	NA	NA	NA	NA	NA	NA
		High	Black	High Static Cooling Only	CFM	2201	2172	2138	2108	2074	2041	1970	1867	1764	1634
					BHP	0.83	0.84	0.87	0.88	0.89	0.91	0.89	0.83	0.79	0.74

Table 9 – Dry Coil Air Delivery* - Horizontal and Downflow Discharge Sizes 24-60 208/230VAC - 1 & 3 Phase (Continued)

Unit Size	Heating Rise °F (°C)	Motor Speed	Tap	Allowable Functions	ESP (in. W.C.)	0.1	0.2	0.3	0.4	0.5	0.6	0.7	0.8	0.9	1
60090	35 - 65 (19 - 36)	Low†	Blue		CFM	839	768	697	625	551	486	422	360	306	x
					BHP	0.09	0.10	0.10	0.11	0.12	0.12	0.13	0.14	0.14	x
					Gas Heat Rise (°F)	NA	NA	NA	NA	NA	NA	NA	NA	NA	NA
					Gas Heat Rise (°C)	NA	NA	NA	NA	NA	NA	NA	NA	NA	NA
		Med-Low**	Pink	Heating	CFM	1403	1361	1320	1276	1236	1192	1145	1099	1054	1012
					BHP	0.28	0.29	0.30	0.31	0.31	0.33	0.34	0.35	0.36	0.37
					Gas Heat Rise (°F)	48	50	51	53	55	57	59	62	64	NA
					Gas Heat Rise (°C)	27	28	28	29	30	32	33	34	36	NA
		Medium‡	Red	Cooling Alternate Heating	CFM	1822	1788	1757	1726	1690	1657	1623	1589	1553	1518
					BHP	0.54	0.55	0.56	0.57	0.59	0.60	0.61	0.62	0.63	0.64
					Gas Heat Rise (°F)	37	38	39	39	40	41	42	43	44	45
					Gas Heat Rise (°C)	21	21	21	22	22	23	23	24	24	25
		Med-High	Orange	Alternate Cooling	CFM	1982	1940	1900	1859	1816	1775	1739	1701	1655	1596
					BHP	0.61	0.62	0.63	0.65	0.66	0.67	0.69	0.70	0.71	0.73
					Gas Heat Rise (°F)	NA	NA	NA	NA	NA	NA	NA	NA	NA	NA
					Gas Heat Rise (°C)	NA	NA	NA	NA	NA	NA	NA	NA	NA	NA
		High	Black	High Static Cooling Only	CFM	2271	2241	2206	2171	2134	2080	1973	1857	1746	1596
					BHP	0.90	0.91	0.93	0.95	0.96	0.95	0.90	0.84	0.78	0.73

Shaded areas indicate speed/static combinations that are not permitted for dehumidification speed.

*. Air delivery values are without air filter and are for dry coil (See Wet Coil Pressure Drop table).
†. Factory-shipped continuous fan speed
‡. Factory-shipped cooling speed
**. Factory-shipped heating speed

Table 10 – Wet Coil Pressure Drop (IN. W.C.)

Unit Size	Standard CFM (SCFM) 600	700	800	900	1000	1100	1200	1300	1400	1500	1600	1700	1800	1900	2000	2100	2200
24	0.03	0.04	0.04	0.05	0.06												
30				0.05	0.06	0.07	0.08	0.11									
36				0.06	0.06	0.09	0.10	0.11	0.14								
42					0.05	0.05	0.06	0.07	0.08	0.08	0.09	0.09	0.11				
48							0.04	0.06	0.09	0.10	0.10	0.11	0.12	0.13	0.14		
60										0.06	0.07	0.01	0.08	0.09	0.10	0.12	0.13

Table 11 – Economizer with 1-in. Filter Pressure Drop (IN. W.C.)

Filter Size in. (mm)	Cooling Tons	Standard CFM (SCFM) 600	700	800	900	1000	1100	1200	1300	1400	1500	1600	1700	1800	1900	2000	2100	2200
600-1400 CFM 12x20x1+12x20x1 (305x508x25+305x508x25)	2.0, 2.5, 3.0	-	-	0.09	0.14	0.16	0.18	0.25	0.28	0.30	-	-	-	-	-	-	-	-
1200-1800 CFM 16x24x1+14x24x1 (406x610x25+356x610x25)	3.5, 4.0	-	-	-	-	-	-	0.10	0.11	0.12	0.13	0.14	0.16	0.16	-	-	-	-
1500-2200 CFM 16x24x1+18x24x1 (406x610x25+457x610x25)	5.0	-	-	-	-	-	-	-	-	-	0.15	0.17	0.18	0.20	0.21	0.22	0.23	0.23

Manufacturer reserves the right to change, at any time, specifications and designs without notice and without obligations.

Table 12 – Filter Pressure Drop Table (IN. W.C.)

Filter Size in. (mm)	Cooling Tons	Standard CFM (SCFM)																
		600	700	800	900	1000	1100	1200	1300	1400	1500	1600	1700	1800	1900	2000	2100	2200
600-1400 CFM 12x20x1+12x20x1 (305x508x25+305x508x25)	2.0, 2.5, 3.0	0.03	0.05	0.06	0.08	0.10	0.11	0.13	0.14	0.16	-	-	-	-	-	-	-	-
1200-1800 CFM 16x24x1+14x24x1 (406x610x25+356x610x25)	3.5, 4.0	-	-	-	-	-	-	0.07	0.08	0.09	0.09	0.10	0.11	0.12	-	-	-	-
1500-2200 CFM 16x24x1+18x24x1 (406x610x25+457x610x25)	5.0	-	-	-	-	-	-	-	-	-	0.04	0.06	0.08	0.10	0.11	0.13	0.14	0.15

Maintenance

To ensure continuing high performance and to minimize the possibility of premature equipment failure, periodic maintenance must be performed on this equipment. This unit should be inspected at least once each year by a qualified service person. To troubleshoot unit, refer to Table 13 - Table 15, Troubleshooting Chart.

NOTE: TO EQUIPMENT OWNER: Consult your local dealer about the availability of a maintenance contract.

WARNING

PERSONAL INJURY AND UNIT DAMAGE HAZARD

Failure to follow this warning could result in personal injury or death and unit component damage.

The ability to properly perform maintenance on this equipment requires certain expertise, mechanical skills, tools and equipment. If you do not possess these, do not attempt to perform any maintenance on this equipment, other than those procedures recommended in the Owner's Manual.

WARNING

ELECTRICAL SHOCK HAZARD

Failure to follow these warnings could result in personal injury or death:

Turn off electrical power to the unit and install lock out tag before performing any maintenance or service on this unit.

Use extreme caution when removing panels and parts.

Never place anything combustible either on or in contact with the unit.

CAUTION

UNIT OPERATION HAZARD

Failure to follow this caution may result in improper operation.

Errors made when reconnecting wires may cause improper and dangerous operation. Label all wires prior to disconnecting when servicing.

CAUTION

ENVIRONMENTAL HAZARD

Failure to follow this caution may result in environmental pollution.

Remove and re-cycle all components or materials (i.e. oil, refrigerant, etc) before unit final disposal.

The minimum maintenance requirements for this equipment are as follows:

1. Inspect air filter(s) each month. Clean or replace when necessary.
2. Inspect indoor coil, drain pan, and condensate drain each cooling season for cleanliness. Clean when necessary.
3. Inspect blower motor and wheel for cleanliness at the beginning of each heating and cooling season. Clean when necessary. For first heating and cooling season, inspect blower wheel bi-monthly to determine proper cleaning frequency.
4. Check electrical connections for tightness and controls for proper operation each heating and cooling season. Service when necessary.
5. Ensure electric wires are not in contact with refrigerant tubing or sharp metal edges.
6. Check and inspect heating section before each heating season. Clean and adjust when necessary.
7. Check flue hood and remove any obstructions, if necessary.

Air Filter

IMPORTANT: Never operate the unit without a suitable air filter in the return-air duct system. Always replace the filter with the same dimensional size and type as originally installed. See Table 1 for recommended filter sizes.

Inspect air filter(s) at least once each month and replace (throwaway-type) or clean (cleanable-type) at least twice during each cooling season and twice during the heating season, or whenever the filter becomes clogged with dust and lint.

Indoor Blower and Motor

NOTE: All motors are pre-lubricated. Do not attempt to lubricate these motors.

For longer life, operating economy, and continuing efficiency, clean accumulated dirt and grease from the blower wheel and motor annually.

WARNING

ELECTRICAL SHOCK HAZARD

Failure to follow this warning could result in personal injury or death.

Disconnect and tag electrical power to the unit before cleaning the blower motor and wheel.

To clean the blower motor and wheel:

1. Remove and disassemble blower assembly as follows:
   a. Remove blower access panel (see Fig. 22).
   b. Disconnect 5 pin plug and 4 pin plug from indoor blower motor. Remove capacitor if required.
   c. On all units remove blower assembly from unit. Remove screws securing blower to blower partition and slide assembly out. Be careful not to tear insulation in blower compartment.
   d. Ensure proper reassembly by marking blower wheel and motor in relation to blower housing before disassembly.
   e. Loosen set screw(s) that secures wheel to motor shaft, remove screws that secure motor mount brackets to housing, and slide motor and motor mount out of housing.
2. Remove and clean blower wheel as follows:

a. Ensure proper reassembly by marking wheel orientation.
b. Lift wheel from housing. When handling and/or cleaning blower wheel, be sure not to disturb balance weights (clips) on blower wheel vanes.
c. Remove caked-on dirt from wheel and housing with a brush. Remove lint and/or dirt accumulations from wheel and housing with vacuum cleaner, using soft brush attachment. Remove grease and oil with mild solvent.
d. Reassemble wheel into housing.
e. Reassemble motor into housing. Be sure set screws are tightened on motor shaft flats and not on round part of shaft. Reinstall blower into unit. Reinstall capacitor.
f. Connect 5 pin plug and 4 pin plug to indoor blower motor.
g. Reinstall blower access panel (see Fig. 22).

3. Restore electrical power to unit. Start unit and check for proper blower rotation and motor speeds during heating and cooling cycles.

Induced Draft (combustion air) Blower Assembly

The induced-draft blower assembly consists of the inducer motor, the blower housing, and the induced-draft blower wheel.

Clean the inducer wheel periodically to assure proper airflow and heating efficiency. Inspect blower wheel every fall before the heating season.

To inspect blower wheel:

1. Shut off power to the unit and close the manual shut off valve on the gas supply line to the unit.
2. Remove 2 screws holding the flue hood (Fig. 20) and remove the flue hood.
3. Remove flue baffle using a 5/16" ratchet to remove the 2 screws, being careful not to drop the 2 screws into the inducer housing.
4. Wearing gloves, inspect the inducer wheel blades for cleanliness by slowly spinning the wheel down using a screwdriver and observing with a flashlight. If debris is evident on the blades, take a small vacuum hose to the blades. Once you have cleaned 40 blades, the process is complete.

NOTE: If a more thorough cleaning is required, refer to Service Manual for removal of induced-draft blower assembly.

5. Re-connect the flue baffle using the 2 screws and 5/16" ratchet, being careful not to drop the screws into the housing.
6. Re-connect flue hood (Fig. 20) using the 2 screws removed.
7. Turn power back onto unit and open gas supply shutoff valve.

Flue Gas Passageways

To inspect the flue collector box and upper areas of the heat exchanger:

1. Remove the induced draft blower assembly according to directions in the service manual.
2. Remove the 11 screws holding the flue collector box cover (See Fig. 21) to the heat exchanger assembly. Inspect the heat exchangers.
3. Clean all surfaces, as required, using a wire brush.

Limit Switch

Remove blower access panel (see Fig. 22). Limit switch is located on the fan partition.

Burner Ignition

Unit is equipped with a direct spark ignition 100 percent lockout system. Ignition module (IGC) is located in the control box (See Fig. 21). Module contains a self-diagnostic LED. During servicing, refer to label diagram or Table 6 in these instructions for LED interpretation.

If lockout occurs, unit may be reset by either momentarily interrupting power supply to unit or by turning selector switch to OFF position at the thermostat.

NOTE: For Ultra Low NOx The combined flame sensor/sparker is located on the right side of the burner box (See Fig. 20). The flame sensor/sparker is accessible for service by removing the cover in the right side panel. The burner thermal switch (BTS) is located on the top of the burner box. For 60k heat sizes, the BTS switch is accessible through the cover in the right side panel. For 90k heat sizes, the BTS switch is accessible by removing the control access panel.

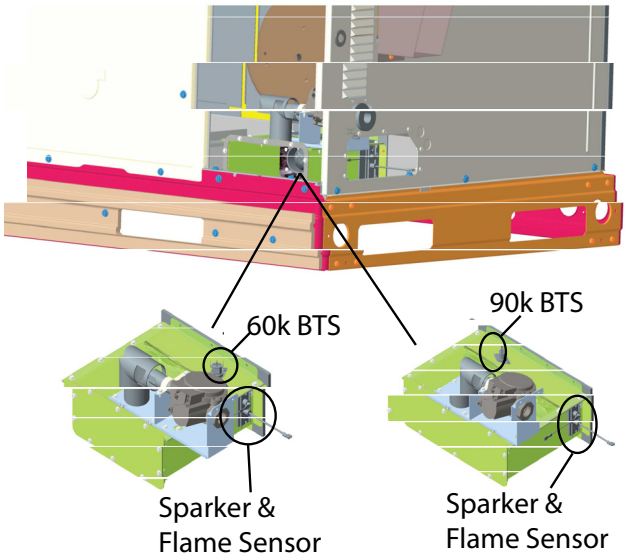

A200287

Fig. 20 – Burner Thermal Switch (BTS) (Ultra Low NOx)

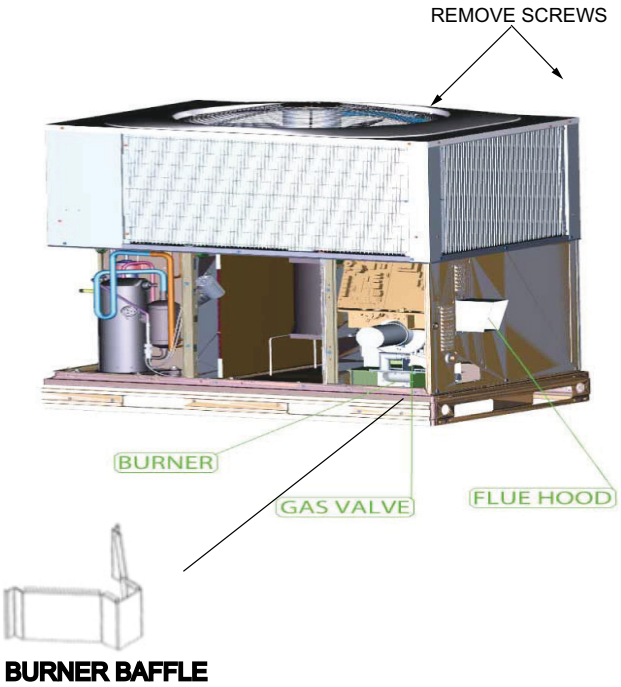

A200278

Fig. 21 – Blower Housing, Flue Collector Box and Burner Heat Exchanger Assembly (Ultra Low NOx)

Ultra Low NOx Burner Baffle Inspection/Cleaning (See Fig. 21.)

If the inlet side of the burner is required to be inspected and cleaned for trouble shooting, the design allow accessing the burner without removing the burner box from the heat exchanger assembly. This can be

done by removing the screws from the front cover of the burner box and losing the screws on each side of the top cover to allow easy removal of baffle from the burner box. Once the baffle is removed the inlet side of the burner can be accessed and cleaned.

NOTE: This is NOT recommended to perform on yearly maintenance inspections, only allowed for trouble shooting the burner box assembly for any blockage.

NOTE: Burner/heat exchanger assembly

Due to the design, and to prevent damage to components, this is considered as one assembly and cannot be disassembled. This assembly is available to order though Replacement Components.

WARNING

FIRE, EXPLOSION HAZARD

Failure to follow this warning could result in personal injury, death or property damage.

Do not purge gas supply into the combustion chamber. Do not use a match or other open flame to check for gas leaks.

Use a commercially available soap solution made specifically for the detection of leaks to check all connections. A fire or explosion may result causing property damage, personal injury or loss of life.

Outdoor Coil, Indoor Coil, and Condensate Drain Pan

Inspect the condenser coil, evaporator coil, and condensate drain pan at least once each year.

The coils are easily cleaned when dry; therefore, inspect and clean the coils either before or after each cooling season. Remove all obstructions, including weeds and shrubs, that interfere with the airflow through the condenser coil.

Straighten bent fins with a fin comb. If coated with dirt or lint, clean the coils with a vacuum cleaner, using the soft brush attachment. Be careful not to bend the fins. If coated with oil or grease, clean the coils with a mild detergent and water solution. Rinse coils with clear water, using a garden hose. Be careful not to splash water on motors, insulation, wiring, or air filter(s). For best results, spray condenser coil fins from inside to outside the unit. On units with an outer and inner condenser coil, be sure to clean between the coils. Be sure to flush all dirt and debris from the unit base.

Inspect the drain pan and condensate drain line when inspecting the coils. Clean the drain pan and condensate drain by removing all foreign matter from the pan. Flush the pan and drain trough with clear water. Do not splash water on the insulation, motor, wiring, or air filter(s). If the drain trough is restricted, clear it with a “plumbers snake” or similar probe device.

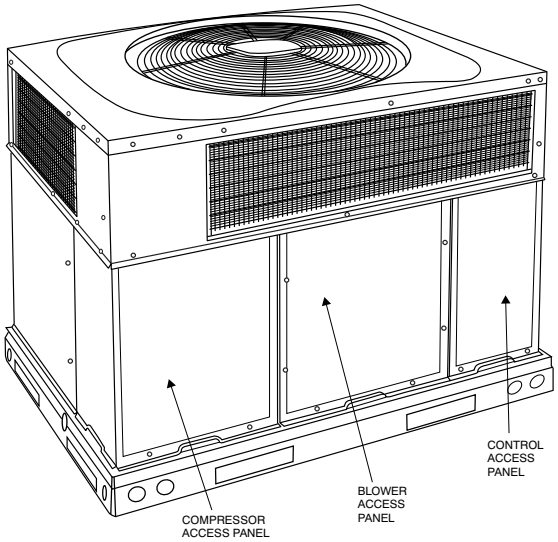

A170032

Fig. 22 – Unit Access Panels

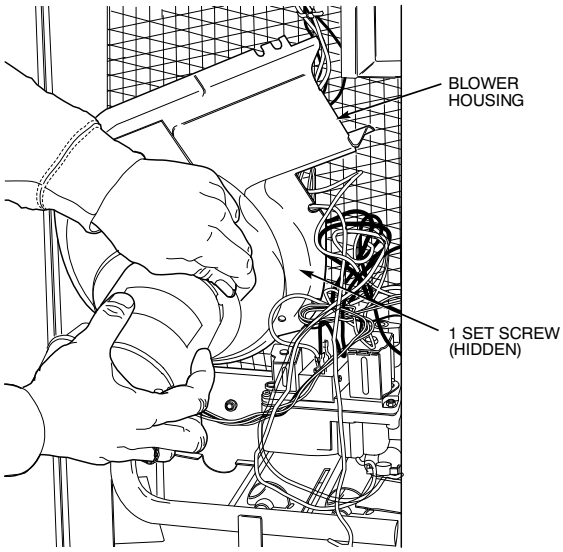

A200292

Fig. 23 – Removal of Motor and Blower Wheel

Outdoor Fan

CAUTION

UNIT OPERATION HAZARD

Failure to follow this caution may result in damage to unit components.

Keep the condenser fan free from all obstructions to ensure proper cooling operation. Never place articles on top of the unit.

1. Remove 6 screws holding outdoor grille and motor to top cover.
2. Turn motor/grille assembly upside down on top cover to expose fan blade.
3. Inspect the fan blades for cracks or bends.
4. If fan needs to be removed, loosen set screw and slide fan off motor shaft.
5. When replacing fan blade, position blade as shown in Fig. 24.
6. Ensure that set screw engages the flat area on the motor shaft when tightening.
7. Replace grille.

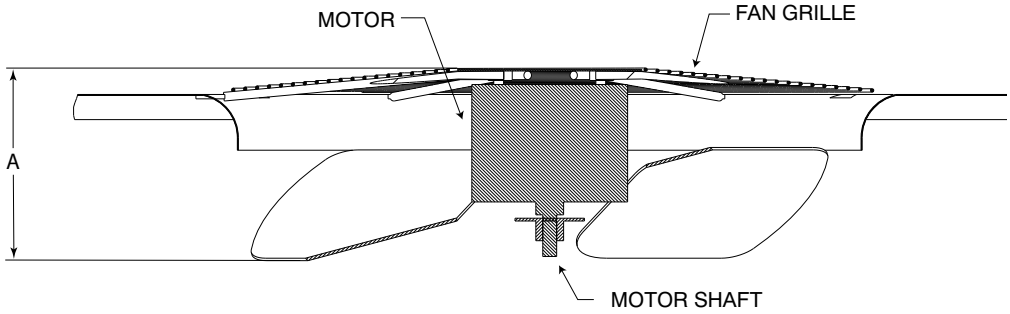

A08505

MAX DISTANCE BETWEEN TOP OF FAN GRILLE AND BOTTOM OF FAN BLADE

Size	"A"	
	in.	mm
24	9.0	228
30	7.1	180
36	8.0	203
42	7.6	193
48	7.6	193
60	7.6	193

Fig. 24 – Fan Blade Position

Electrical Controls and Wiring

Inspect and check the electrical controls and wiring annually. Be sure to turn off the electrical power to the unit.

Remove access panels (see Fig. 22) to locate all the electrical controls and wiring. Check all electrical connections for tightness. Tighten all screw connections. If any smoky or burned connections are noticed, disassemble the connection, clean all the parts, re-strip the wire end and reassemble the connection properly and securely.

After inspecting the electrical controls and wiring, replace all the panels. Start the unit, and observe at least one complete cooling cycle to ensure proper operation. If discrepancies are observed in operating cycle, or if a suspected malfunction has occurred, check each electrical component with the proper electrical instrumentation. Refer to the unit wiring label when making these checks.

Refrigerant Circuit

Annually inspect all refrigerant tubing connections.

EXPLOSION, SAFETY AND ENVIRONMENTAL HAZARD

Failure to follow this warning could result in personal injury, death or property damage.

System under pressure. Relieve pressure and recover all refrigerant before system repair or final unit disposal. Use all service ports and open all flow-control devices, including solenoid valves.

If low cooling performance is suspected, leak-test all refrigerant tubing using an electronic leak-detector or liquid-soap solution. If a refrigerant leak is detected, refer to the Check for Refrigerant Leaks section.

If no refrigerant leaks are found and low cooling performance is suspected, refer to the Checking and Adjusting Refrigerant Charge section.

Gas Input

The gas input does not require checking unless improper heating performance is suspected. If a problem exists, refer to the Start-Up section.

Evaporator Airflow

The heating and/or cooling airflow does not require checking unless improper performance is suspected. If a problem exists, be sure that all supply- and return-air grilles are open and free from obstructions, and that the air filter is clean. When necessary, refer to the Indoor Airflow and Airflow Adjustments section to check the system airflow.

Puron (R-410A) Items

The indoor metering device is either a TXV or orifice type device depending on size.

Pressure Switches

Pressure switches are protective devices wired into control circuit (low voltage). They shut off compressor if abnormally high or low pressures are present in the refrigeration circuit. These pressure switches are specifically designed to operate with Puron (R-410A) systems. R-22 pressure switches must not be used as replacements for the Puron (R-410A) system.

Low Pressure Switch (24 size only)

This switch is located on the suction line and protects against low suction pressures caused by such events as loss of charge, low airflow across indoor coil, dirty filters, etc. It opens at 50 psig. If system pressure is above this, switch should be closed. To check switch:

1. Turn off all power to unit.
2. Disconnect leads on switch.
3. Apply ohm meter leads across switch. You should have continuity on a closed switch.

NOTE: Because these switches are attached to refrigeration system under pressure, it is not advisable to remove this device for troubleshooting unless you are reasonably certain that a problem exists. If switch must be removed, remove and recover all system charge so that pressure gauges read 0 psig. Never open system without breaking vacuum with dry nitrogen.

High-Pressure Switch

The high-pressure switch is located in the discharge line and protects against excessive condenser coil pressure. It opens at 650 psig.

High pressure may be caused by a dirty outdoor coil, failed fan motor, or outdoor air recirculation. To check switch:

1. Turn off all power to unit.
2. Disconnect leads on switch.
3. Apply ohm meter leads across switch. You should have continuity on a closed switch.

Compressor (Puron (R-410A) Refrigerant)

The compressor used in this product is specifically designed to operate with Puron (R-410A) refrigerant and cannot be interchanged.

The compressor is an electrical (as well as mechanical) device. Exercise extreme caution when working near compressors. Power should be shut off, if possible, for most troubleshooting techniques. Refrigerants present additional safety hazards.

⚠ WARNING

FIRE/EXPLOSION HAZARD

Failure to follow this warning could result in personal injury or death and/or property damage.

Wear safety glasses and gloves when handling refrigerants. Keep torches and other ignition sources away from refrigerants and oils.

For models that have a scroll compressor, the scroll compressor pumps refrigerant throughout the system by the interaction of a stationary and an orbiting scroll. The scroll compressor has no dynamic suction or discharge valves, and it is more tolerant of stresses caused by debris, liquid slugging, and flooded starts. The compressor is equipped with a noise reducing shutdown device and an internal pressure relief port. The pressure relief port is a safety device, designed to protect against extreme high pressure. The relief port has an operating range between 550 (26.34 kPa) and 625 psig (29.93 kPa) differential pressure.

⚠ WARNING

EXPLOSION, ENVIRONMENTAL SAFETY HAZARD

Failure to follow this warning could result in personal injury, death or equipment damage.

This system uses Puron (R-410A) refrigerant which has higher operating pressures than R-22 and other refrigerants. No other refrigerant may be used in this system. Gauge set, hoses, and recovery system must be designed to handle Puron (R-410A). If you are unsure, consult the equipment manufacturer.

Refrigerant System

This information covers the refrigerant system including the compressor oil needed, servicing systems on roofs containing synthetic materials, the filter drier and refrigerant charging.

Compressor Oil

The Copeland scroll compressor uses 3MAF POE oil. If additional oil is needed, use Uniqema RL32-3MAF. If this oil is not available, use Copeland Ultra 32 CC or Mobil Arctic EAL22 CC. This oil is extremely hygroscopic, meaning it absorbs water readily. POE oils can absorb 15 times as much water as other oils designed for HCFC and CFC refrigerants. Take all necessary precautions to avoid exposure of the oil to the atmosphere.

Reciprocating Compressor

Some sizes may include a traditional reciprocating compressor. These compressors have standard pistons valves, overloads, and internal pressure relief. Refer to Troubleshooting section or Service Manual for more information.

Rotary Compressor

The 24 and 30 size unit uses a single cylinder rotary compressor. This compressor utilizes a rotor which is positioned eccentrically with respect to the shell. Refrigerant gas is ported directly into the compression chamber and discharged into the surrounding area. It is also known as a “high-side” design since high pressure gas surrounds the motor and compression chamber. The majority of the shell will be hot to the touch. The rotary compressor also utilizes an external built-in accumulator to reduce the likelihood of refrigerant liquid from entering the compressor.

Servicing Systems on Roofs with Synthetic Materials

POE (polyolester) compressor lubricants are known to cause long term damage to some synthetic roofing materials.

Exposure, even if immediately cleaned up, may cause embrittlement (leading to cracking) to occur in one year or more. When performing any service that may risk exposure of compressor oil to the roof, take appropriate precautions to protect roofing. Procedures which risk oil leakage include, but are not limited to, compressor replacement, repairing refrigerant leaks, replacing refrigerant components such as filter drier, pressure switch, metering device, coil, accumulator, or reversing valve.

Synthetic Roof Precautionary Procedure

1. Cover extended roof working area with an impermeable polyethylene (plastic) drip cloth or tarp. Cover an approximate 10 X 10 ft. (3.1 m X 3.1 m) area.
2. Cover area in front of the unit service panel with a terry cloth shop towel to absorb lubricant spills and prevent run-offs, and protect drop cloth from tears caused by tools or components.
3. Place terry cloth shop towel inside unit immediately under component(s) to be serviced and prevent lubricant run-offs through the louvered openings in the unit base.
4. Perform required service.
5. Remove and dispose of any oil contaminated material per local codes.

Liquid Line Filter Drier

This filter drier is specifically designed to operate with Puron (R-410A). Use only factory-authorized components. Filter drier must be replaced whenever the refrigerant system is opened. When removing a filter drier, use a tubing cutter to cut the drier from the system. Do not unsweat a filter drier from the system. Heat from unsweating will release moisture and contaminants from drier into system.

Puron (R-410A) Refrigerant Charging

Refer to unit information plate and charging chart. Some R-410A refrigerant cylinders contain a dip tube to allow liquid refrigerant to flow from cylinder in upright position. For cylinders equipped with a dip tube, charge Puron (R-410A) units with cylinder in upright position and a commercial metering device in manifold hose. Charge refrigerant into suction-line.

Troubleshooting

Use the Troubleshooting Guides (See Table 13 - Table 15) if problems occur with these units.

Start-up Checklist

Use Start-Up checklist to ensure proper start-up procedures are followed.

My Learning Center is your central location for professional residential HVAC training resources that help strengthen careers and businesses. We believe in providing high quality learning experiences both online and in the classroom.

Access My Learning Center with your HVACpartners credentials at www.MLCtraining.com. Please contact us at mylearning@carrier.com with questions.

Table 13 – Troubleshooting Chart

SYMPTOM	CAUSE	REMEDY
Compressor and condenser fan will not start.	Power failure	Call power company
	Fuse blown or circuit breaker tripped	Replace fuse or reset circuit breaker
	Defective contactor, transformer, or high-pressure, loss-of-charge or low-pressure switch	Replace component
	Insufficient line voltage	Determine cause and correct
	Incorrect or faulty wiring	Check wiring diagram and rewire correctly
	Thermostat setting too high	Lower thermostat temperature setting below room temperature
Compressor will not start but condenser fan runs	Faulty wiring or loose connections in compressor circuit	Check wiring and repair or replace
	Compressor motor burned out, seized, or internal overload open	Determine cause Replace compressor
	Defective run/start capacitor, overload, start relay	Determine cause and replace
	One leg of 3-phase power dead	Replace fuse or reset circuit breaker Determine cause
	Low input voltage	Determine cause and correct
Three-phase scroll compressor makes excessive noise, and there may be a low pressure differential.	Scroll compressor is rotating in the wrong direction	Correct the direction of rotation by reversing the 3-phase power leads to the unit. Shut down unit to allow pressures to equalize.
Compressor cycles (other than normally satisfying thermostat)	Refrigerant overcharge or undercharge	Recover refrigerant, evacuate system, and recharge to capacities shown on rating plate
	Defective compressor	Replace and determine cause
	Insufficient line voltage	Determine cause and correct
	Blocked outdoor coil	Determine cause and correct
	Defective run/start capacitor	Determine cause and replace
	Faulty outdoor fan motor or capacitor	Replace
	Restriction in refrigerant system	Locate restriction and remove
Compressor operates continuously	Dirty air filter	Replace filter
	Unit undersized for load	Decrease load or increase unit size
	Thermostat temperature set too low	Reset thermostat
	Low refrigerant charge	Locate leak, repair, and recharge
	Air in system	Recover refrigerant, evacuate system, and recharge
	Outdoor coil dirty or restricted	Clean coil or remove restriction
Excessive head pressure	Dirty air filter	Replace filter
	Dirty condenser coil	Clean coil
	Refrigerant overcharged	Recover excess refrigerant
	Air in system	Recover refrigerant, evacuate system, and recharge
	Condenser air restricted or air short-cycling	Determine cause and correct
Head pressure too low	Low refrigerant charge	Check for leaks, repair, and recharge.
	Restriction in liquid tube	Remove restriction
Excessive suction pressure	Refrigerant overcharged	Recover excess refrigerant
Suction pressure too low	Dirty air filter	Replace filter
	Low refrigerant charge	Check for leaks, repair and recharge
	Metering device or low side restricted	Remove source of restriction
	Insufficient evaporator airflow	Increase air quantity Check filter–replace if necessary
	Temperature too low in conditioned area	Reset thermostat
	Outdoor ambient below 55°F (13°C)	Install low-ambient kit
	Filter drier restricted	Replace filter

Table 14 – Troubleshooting Guide–Heating

SYMPTOM	CAUSE	REMEDY
Burners will not ignite	Water in gas line	Drain. Install drip leg.
	No power to furnace	Check power supply fuses, wiring or circuit breaker.
	No 24-v power supply to control circuit	Check transformer. NOTE: Some transformers have internal over-current protection that requires a cool-down period to reset.
	Mis-wired or loose connections	Check all wiring and wire nut connections
	Misaligned spark electrodes	Check flame ignition and sense electrode positioning. Adjust as necessary.
	No gas at main burners	1. Check gas line for air. Purge as necessary. NOTE: After purging gas line of air, wait at least 5 minutes for any gas to dissipate before attempting to light unit. 2. Check gas valve.
Inadequate heating	Dirty air filter	Clean or replace filter as necessary
	Gas input to furnace too low	Check gas pressure at manifold match with that on unit nameplate
	Unit undersized for application	Replace with proper unit or add additional unit
	Restricted airflow	Clean or replace filter. Remove any restriction.
	Limit switch cycles main burners	Check rotation of blower, temperature rise of unit. Adjust as necessary.

Table 15 – Troubleshooting Guide–LED Status Codes

SYMPTOM	CAUSE	REMEDY
No Power or Hardware failure (LED OFF)	Loss of power to control module (IGC)*.	Check 5-amp fuse son IGC*, power to unit, 24-v circuit breaker, and transformer. Units without a 24-v circuit breaker have an internal overload in the 24-v transformer. If the overload trips, allow 10 minutes for automatic reset.
Check fuse, low voltage circuit (LED 1 flash)	Fuse is blown or missing or short circuit in secondary (24VAC) wiring.	Replace fuse if needed. Verify no short circuit in low voltage (24 VAC wiring).
Limit switch faults (LED 2 flashes)	High temperature limit switch is open.	Check the operation of the indoor (evaporator) fan motor. Ensure that the supply-air temperature rise is in accordance with the range on the unit nameplate. Clean or replace filters.
Flame sense fault (LED 3 flashes)	The IGC* sensed flame that should not be present.	Reset unit. If problem persists, replace control board.
4 consecutive limit switch faults (LED 4 flashes)	Inadequate airflow to unit.	Check the operation of the indoor (evaporator) fan motor and that supply-air temperature rise agrees with range on unit nameplate information.
Ignition lockout fault (LED 5 flashes)	Unit unsuccessfully attempted ignition for 15 minutes.	Check ignitor and flame sensor electrode spacing, gaps, etc. Inspect ignitor wire; ensure ignitor wire routed clear from inducer motor wires. Ensure that fame sense and ignition wires are properly terminated. Verify that unit is obtaining proper amount of gas. Verify that the intake tube, perforated holes on the burner box top, and the burner box baffle are aligned.
Pressure Switch fault (LED 6 flashes)	Open pressure switch.	Verify wiring connections to pressure switch and inducer motor. Inspect ignitor wire; ensure ignitor wire routed clear from inducer motor wires. Verify pressure switch hose is tightly connected to both inducer housing and pressure switch. Verify inducer wheel is properly attached to inducer motor shaft. Verify inducer motor shaft is turning.
Rollout Switch fault (Standard and Low NOx models) Burner Thermal Switch (BTS) fault (Ultra Low NOx {ULN}) (LED 7 flashes)	Rollout switch or BTS has opened.	Rollout switch/BTS will automatically reset, but IGC* will continue to lockout unit. Check gas valve operation. Verify gas orifice(s) properly sized for application.Ensure that induced-draft blower wheel is properly secured to motor shaft. For ULN models verify that the intake tube, perforated holes on the burner box top, and the burner box baffle are aligned. Reset unit at unit disconnect.
Internal control fault (LED 8 flashes)	Microprocessor has sensed an error in the software or hardware.	If error code is not cleared by resetting unit power, replace the IGC*.
Temporary 1 hr auto reset[1] (LED 9 flashes)	Electrical interference impeding IGC software	Reset 24-v. to control board or turn thermostat off, then on again. Fault will automatically reset itself in one (1) hour.

***WARNING ⚠:** If the IGC must be replaced, be sure to ground yourself to dissipate any electrical charge that my be present before handling new control board. The IGC is sensitive to static electricity and my be damaged if the necessary precautions are not taken.

IMPORTANT: Refer to Table 15-Troubleshooting Guide-Heating for additional troubleshooting analysis.

LEGEND

IGC—Integrated Gas Unit Controller

LED—Light-Emitting Diode

Start-Up Checklist

(Remove and Store in Job Files)

I. PRELIMINARY INFORMATION

MODEL NO.: _____

SERIAL NO.: _____

DATE: _____

TECHNICIAN: _____

II. PRESTART-UP (Insert check mark in box as each item is completed)

( ) VERIFY THAT ALL PACKING MATERIALS HAVE BEEN REMOVED FROM UNIT
( ) REMOVE ALL SHIPPING HOLD DOWN BOLTS AND BRACKETS PER INSTALLATION INSTRUCTIONS
( ) CHECK ALL ELECTRICAL CONNECTIONS AND TERMINALS FOR TIGHTNESS
( ) CHECK GAS PIPING FOR LEAKS (WHERE APPLICABLE)
( ) CHECK THAT INDOOR (EVAPORATOR) AIR FILTER IS CLEAN AND IN PLACE
( ) VERIFY THAT UNIT INSTALLATION IS LEVEL
( ) CHECK FAN WHEEL, AND PROPELLER FOR LOCATION IN HOUSING/ORIFICE AND SET SCREW TIGHTNESS

III. START-UP

ELECTRICAL

SUPPLY VOLTAGE _____

COMPRESSOR AMPS _____

INDOOR (EVAPORATOR) FAN AMPS _____

TEMPERATURES

OUTDOOR (CONDENSER) AIR TEMPERATURE _____ DB

RETURN-AIR TEMPERATURE _____ DB _____ WB

COOLING SUPPLY AIR _____ DB _____ WB

GAS HEAT SUPPLY AIR _____

PRESSURES

GAS INLET PRESSURE _____ IN. W.C.

GAS MANIFOLD PRESSURE _____ IN. W.C.

REFRIGERANT SUCTION _____ PSIG,SUCTION LINE TEMP* _____

REFRIGERANT DISCHARGE _____ PSIG, LIQUID TEMP† _____

( ) VERIFY REFRIGERANT CHARGE USING CHARGING CHARTS

GAS HEAT TEMPERATURE RISE

TEMPERATURE RISE (See Literature) RANGE _____

MEASURED TEMPERATURE RISE _____

* Measured at suction inlet to compressor
†Measured at liquid line leaving condenser.

© 2022 Carrier. All rights reserved.

Edition Date: 05/22

Catalog No: 48VL-ULN-05SI

Replaces: 48VL-ULN-04SI

Manufacturer reserves the right to change, at any time, specifications and designs without notice and without obligations.