50NHB
Single-Packaged Heat Pump System With Puron Advance™ (R-454B) Refrigerant Single Phase 2 to 5 Nominal Tons (Sizes 024-060)

Installation Instructions

IMPORTANT: Effective January 1, 2015, all split system and packaged air conditioners must be installed pursuant to applicable regional efficiency standards issued by the Department of Energy.

NOTE: Read the entire instruction manual before starting the installation.

NOTE: Installer: Make sure the Owner's Manual and Service Instructions are left with the unit after installation.

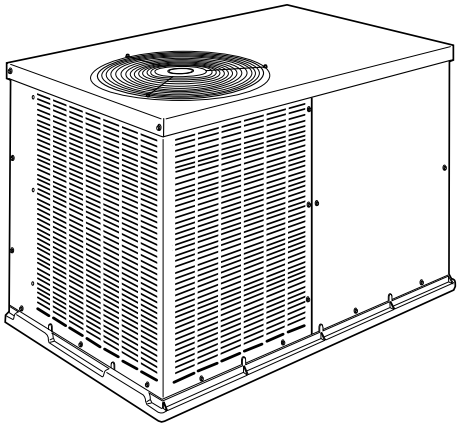

A10165

Fig. 1 – 50NHB 024-036

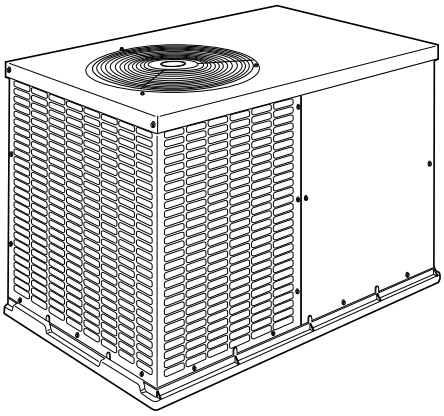

A150067

Fig. 2 – 50NHB 042-060

Certified to leak 2% or less of nominal air conditioning CFM delivered when pressurized to 1-in. W.C. with all present air inlets, air outlets, and condensate drain port(s) sealed.

Table of Contents

Safety Considerations 2
Introduction. 2
Receiving and Installation 2
Transport and Storage Considerations 2
Identify Unit. 2
Inspect Shipment 3
Slab Mount. 3
Ground Mount 3
Configuring Units for Downflow (Vertical) Discharge. 8
High-Voltage Connections. 9
Routing Power Leads into Unit 9
Connecting Ground Lead to Unit Ground 9
Routing Control Power Wires (24-V) 9
Accessory Electric Heat Wiring. 10
Pre-Start-up. 11
Start-up 11
Checking Cooling and Heating Control Operation 12
No Charge 12
Low Charge Cooling 12
Heating Mode Charge 13
Fan Operation. 15
Cooling Operation 15
Heating Operation 15
Continuous Fan 15
Demand Defrost Mode. 15
Maintenance 20
Air Filter 20
Unit Top Removal 20
Indoor Blower and Motor 20
Outdoor Coil, Indoor Coil, and Condensate Drain Pan 21
Outdoor Fan Adjustment 21
Electrical Controls and Wiring 21
Refrigerant Circuit. 21
Indoor Airflow. 22
Metering Devices. 22
High Flow Valves 22
High Pressure Switch. 22
Loss of Charge Switch. 22
Puron Advance (R-454B) Compressor 22
Refrigerant 22
Compressor Oil 22
Servicing Systems on Roofs with Synthetic Materials 22
Synthetic Roof Precautionary Procedure. 22
Liquid Line Filter Drier 23
Puron Advance (R-454B) Refrigerant Charging 23
Troubleshooting 23
Sequence of Events - Dissipation Mode 23
Start-up Checklist 23
Decommissioning 27

Safety Considerations

This unit is equipped with electrically powered safety measures. For the safety measures to be effective, the unit must be electrically powered at all times after installation, other than when servicing.

⚠ WARNING

PERSONAL INJURY AND PROPERTY DAMAGE HAZARD

Continuous fan mode required for proper functioning. Installation must meet the Required Minimum Dissipation Airflow as outlined in the **Leak Dissipation System** section. Follow instructions in the Continuous Fan Speed Set-Up section to change speeds.

Improper installation, adjustment, alteration, service maintenance, or use can cause explosion, fire, electrical shock, or other conditions which may cause death, personal injury, or property damage. Consult a qualified installer, service agency, or your distributor or branch for information or assistance. The qualified installer or agency must use factory-authorized kits or accessories when modifying this product. Refer to the individual instructions packaged with the kits or accessories when installing.

⚠ WARNING

PERSONAL INJURY AND PROPERTY DAMAGE HAZARD

For continued performance, reliability, and safety, the only approved accessories and replacement parts are those specified by the equipment manufacturer. The use of non-manufacturer approved parts and accessories could invalidate the equipment limited warranty and result in fire risk, equipment malfunction, and failure. Please review manufacturer's instructions and replacement part catalogs available from your equipment supplier.

Auxiliary devices which may be a POTENTIAL IGNITION SOURCE shall not be installed in the duct work. Examples of such POTENTIAL IGNITION SOURCES are hot surfaces with a temperature exceeding 1292°F (700°C) and electric switching devices.

Electrostatic air purifiers installed in the ductwork are permitted, if the purifier has an airflow sensor.

False ceilings or drop ceilings must not be used as a return air duct/plenum.

This self-contained unit is already charged with refrigerant for optimum performance, and shouldn't require any adjustments. Should any installation/service work on the A2L refrigerant system be needed, non-sparking tools are required. If the refrigerant system is opened, a refrigerant detector should be used to check for leaks. Open flames or other ignition sources should not be present, except during brazing. Brazing should only take place on refrigerant tubes that are open to the atmosphere or have been properly evacuated.

Follow all safety codes. Wear safety glasses, protective clothing, and work gloves. Use quenching cloth for brazing operations. Have fire extinguisher available. Read these instructions thoroughly and follow all warnings or cautions included in literature and attached to the unit. Consult local building codes, the current editions of the National Electrical Code (NEC) NFPA 70 and NFPA 90B-Installation Warm Air Heating and A/C Systems (Residential). In Canada refer to the current editions of the Canadian Electrical Code CSA C22.1.

Recognize safety information. This is the safety-alert symbol ⚠. When you see this symbol on the unit and in instructions or manuals, be alert to the potential for personal injury. Understand these signal words: DANGER, WARNING, and CAUTION. These words are used with the safety-alert symbol. DANGER identifies the most serious hazards which will result in severe personal injury or death. WARNING signifies hazards which could result in personal injury or death. CAUTION is used to identify unsafe practices which may result in minor personal injury or product and property damage. NOTE is used to highlight suggestions which will result in enhanced installation, reliability, or operation.

⚠ WARNING

ELECTRICAL SHOCK HAZARD

Failure to follow this warning could result in personal injury or death.

Before installing or servicing system, always turn off main power to system and install lockout tag. There may be more than one disconnect switch. Turn off accessory heater power switch if applicable.

⚠ CAUTION

CUT HAZARD

Failure to follow this caution may result in personal injury.

Sheet metal parts may have sharp edges or burrs. Use care and wear appropriate protective clothing, safety glasses and gloves when handling parts and servicing.

⚠ WARNING

PERSONAL INJURY AND ENVIRONMENTAL HAZARD

Failure to relieve system pressure could result in personal injury and/or death.

1. Relieve pressure and recover all refrigerant before servicing existing equipment, and before final unit disposal. Use all service ports and open all flow-control devices, including solenoid valves.
2. Federal regulations require that you do not vent refrigerant into the atmosphere. Recover during system repair or final unit disposal.

Introduction

This packaged heat pump is fully self-contained and designed for outdoor installation (See Fig. 2). Standard units are shipped in a horizontal-discharge configuration for installation on a ground-level slab or directly on the ground if local codes permit. Standard units can be converted to downflow (vertical) discharge configurations for rooftop applications with a field supplied plenum.

Receiving and Installation

Transport and Storage Considerations

This unit employs Puron Advance (R-454B) refrigerant, which is flammable. Regulations may exist with respect to the transportation of this unit, including number of units and the configuration of the equipment in the load transported. Storage of unit should be in accordance with applicable regulations or instructions, whichever is more stringent. This includes the number of units that may be stored together. For disposal of unit, refer to national regulations, and follow the Decommissioning section in this manual.

Step 1 – Check Equipment

Identify Unit

The unit model number and serial number are printed on the unit informative plate. Check this information against shipping papers.

Inspect Shipment

Inspect for shipping damage while unit is still on shipping pallet. If unit appears to be damaged or is torn loose from its anchorage, have it examined by transportation inspectors before removal. Forward claim papers directly to transportation company. Manufacturer is not responsible for any damage incurred in transit. Check all items against shipping list. Immediately notify the nearest equipment distribution office if any item is missing. To prevent loss or damage, leave all parts in original packages until installation.

Step 2 – Provide Unit Support

For hurricane tie downs, contact distributor for details and PE (Professional Engineering) Certificate, if required.

Slab Mount

Place the unit on a solid, level concrete pad that is a minimum of 4 in. (102 mm) thick with 2 in. (51 mm) above grade. The slab should extend approximately 2 in. (51 mm) beyond the casing on all 4 sides of the unit. Do not secure the unit to the slab except when required by local codes.

A 6-in. (152 mm) wide gravel apron should be used around the flat surface to prevent airflow blockage by grass or shrubs. The unit should be level within 1/4 in. (6 mm). This is necessary for the unit drain to function properly.

Ground Mount

The unit may be installed either on a slab or placed directly on the ground if local codes permit. Place the unit on level ground prepared with gravel for condensate discharge.

Step 3 – Provide Clearances

The required minimum service clearances are shown in Fig. 5 - Fig. 6. Adequate ventilation and outdoor air must be provided.

The outdoor fan draws air through the outdoor coil and discharges it through the top fan grille. Be sure that the fan discharge does not recirculate to the outdoor coil. Do not locate the unit in either a corner or under an overhead obstruction. The minimum clearance under a partial overhang (such as a normal house overhang) is 48 in. (1219 mm) above the unit top. The maximum horizontal extension of a partial overhang must not exceed 48 in. (1219 mm).

IMPORTANT: Do not restrict outdoor airflow. An air restriction at either the outdoor-air inlet or the fan discharge may be detrimental to compressor life.

Do not place the unit where water, ice, or snow from an overhang or roof will damage or flood the unit. Do not install the unit on carpeting or other combustible materials. Slab-mounted units should be at least 4 in. (102 mm) above the highest expected water and runoff levels. Do not use unit if it has been under water.

Step 4 – Place Unit

Unit can be moved with the rigging holds provided in the unit base. Refer to Table 1 for operating weights. Use extreme caution to prevent damage when moving the unit. Unit must remain in an upright position during all moving operations. The unit must be level with in 1/4 in. (6 mm) for proper condensate drainage; the ground-level pad must be level before setting the unit in place. When a field-fabricated support is used, be sure that the support is level and that it properly supports the unit.

Step 5 – Select and Install Ductwork

The design and installation of the duct system must be in accordance with the standards of the NFPA for installation of non-residence type air conditioning and ventilating systems, NFPA 90A or residence type, NFPA 90B and/or local codes and ordinances.

Select and size ductwork, supply-air registers, and return air grilles according to ASHRAE (American Society of Heating, Refrigeration, and Air Conditioning Engineers) recommendations.

Use the duct flanges provided on the supply- and return-air openings on the side of the unit. See Fig. 5 - Fig. 6 for connection sizes and locations.

The 14-in. (356 mm) round or 14 x 20 in. (356 x 508 mm) rectangular duct collars are shipped inside the unit attached to the base pan in the indoor blower compartment. They are field-installed and must be removed from the indoor blower compartment prior to start-up, even if they are not used for installation. If a corrugated shipping block is used under the blower housing, remove and discard the block and label.

When designing and installing ductwork, consider the following:

⚠ CAUTION

UNIT DAMAGE HAZARD

Failure to follow this caution may result in damage to unit components.

When connecting ductwork to units, do not drill deeper than 3/4 in. (19 mm) in shaded area shown in Fig. 3 or coil may be damaged.

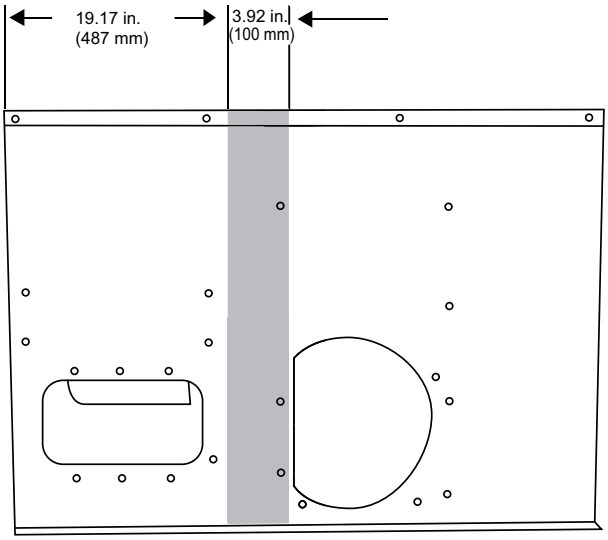

Fig. 3 – Area Not to be Drilled More Than 3/4-in. (19 mm) Deep

1. All units should have field-supplied filters or accessory filter rack installed in the return-air side of the unit. Recommended sizes for filters are shown in Table 1.
2. Avoid abrupt duct size increases and reductions. Abrupt change in duct size adversely affects air performance.

IMPORTANT: Use flexible connectors between ductwork and unit to prevent transmission of vibration. Use suitable gaskets to ensure weather tight and airtight seal. When electric heat is installed, use fireproof canvas (or similar heat resistant material) connector between ductwork and unit discharge connection. If flexible duct is used, insert a sheet metal sleeve inside duct. Heat resistant duct connector (or sheet metal sleeve) must extend 24-in. (610 mm) from electric heater element.

3. Size ductwork for cooling air quantity (cfm). The minimum air quantity for proper electric heater operation is listed in Table 2. Heater limit switches may trip at air quantities below those recommended.
4. Seal, insulate, and weatherproof all external ductwork. Seal, insulate and cover with a vapor barrier all ductwork passing through conditioned spaces. Follow latest Sheet Metal and Air Conditioning Contractors National Association (SMACNA) and Air Conditioning Contractors Association (ACCA) minimum installation standards for residential heating and air conditioning systems.

5. Secure all ducts to building structure. Flash, weatherproof, and vibration-isolate duct openings in wall or roof according to good construction practices.

Fig. 7 shows a typical duct system with unit installed.

Installing factory-supplied duct flanges;

For 24, 30, and 36 sizes:

- Two round 14-in. (356 mm) duct collars are factory supplied.
- Line up the 6 holes in the duct collar with the pre-drilled holes in the side panel.
- Fasten duct collar to side panel using field-supplied screws.

For 42, 48 and 60 sizes (See Fig. 4):

- One round 14-in. (356 mm) duct collar for the supply air connections and two “L” brackets for the 14-in. x 20-in. (356 x 508 mm) return air connection are factory-supplied.
- Line up the 6 holes in the supply duct collar with the pre-drilled holes in the side panel. Fasten duct collar to side panel using field-supplied screws.
- For the return, remove the 4 screws on the left side of the return and install one of the “L” flanges on the left side by replacing the 4 screws. Using the 2 dimples below the return, align the bottom of the “L” flange with the two dimples and attach using filed-supplied thread-cutting screws.

  For the second “L” flange, align flange with the three dimples to the right of the return and the two dimples above the return and attach using field-supplied thread-cutting screws.

NOTE: The factory-installed screws to the right of the return should not be removed in this process.

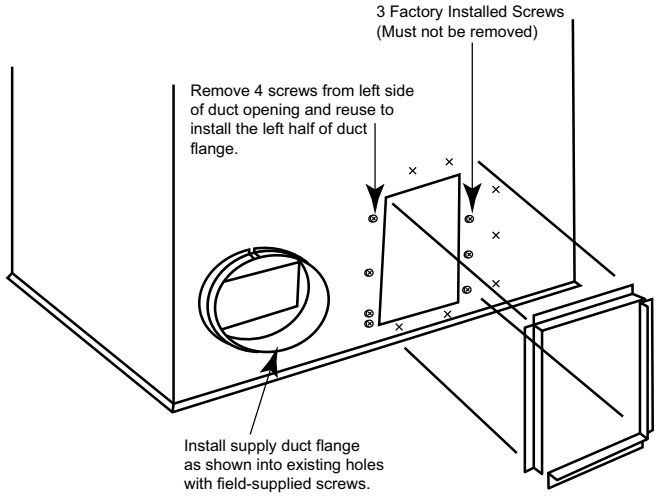

X = Factory dimples for duct flange attachment.

A10081

Fig. 4 – Installing Factory-Supplied Duct Flanges

COOLING CAPACITY	UNIT WT.	UNIT HEIGHT	CENTER OF GRAVITY IN [MM]		
	LBS. KG.	A	X	Y	Z
24	253 115	30-1/8 [765]	14 [356]	19 [483]	14 [356]
30	283 128	34-1/8 [867]	14 [356]	19 [483]	16 [406]
36	285 130	34-1/8 [867]	14 [356]	19 [483]	16 [406]

REQUIRED CLEARANCES TO COMBUSTIBLE MATL.

	INCHES [MM]
TOP OF UNIT	0
BOTTOM OF UNIT	0
SIDE OF UNIT WITH DUCT OPENINGS	0
SIDE OF UNIT OPPOSITE DUCT OPENINGS	0

NEC. REQUIRED CLEARANCES.

	INCHES [MM]
BETWEEN UNITS, POWER ENTRY SIDE	42.0 [1067]
UNIT AND UNGROUNDED SURFACES, POWER ENTRY SIDE	36.0 [914]
UNIT AND BLOCK OR CONCRETE WALLS AND OTHER GROUNDED SURFACES, POWER ENTRY SIDE	42.0 [1067]

REQUIRED CLEARANCE FOR SERVICING

	INCHES [MM]
TOP OF UNIT	36.0 [914]
SIDE OF UNIT OPPOSITE DUCT OPENINGS	30.0 [762]
SIDE OF UNIT WITH POWER ENTRY (EXCEPT FOR NEC REQUIREMENTS)	30.0 [762]

NOTE: CLEARANCES MUST BE MAINTAINED TO PREVENT RECIRCULATION OF AIR FROM OUTDOOR FAN DISCHARGE. A REMOVABLE FENCE OR BARRICADE REQUIRES NO CLEARANCE.

DIMENSIONS IN [] ARE IN MM

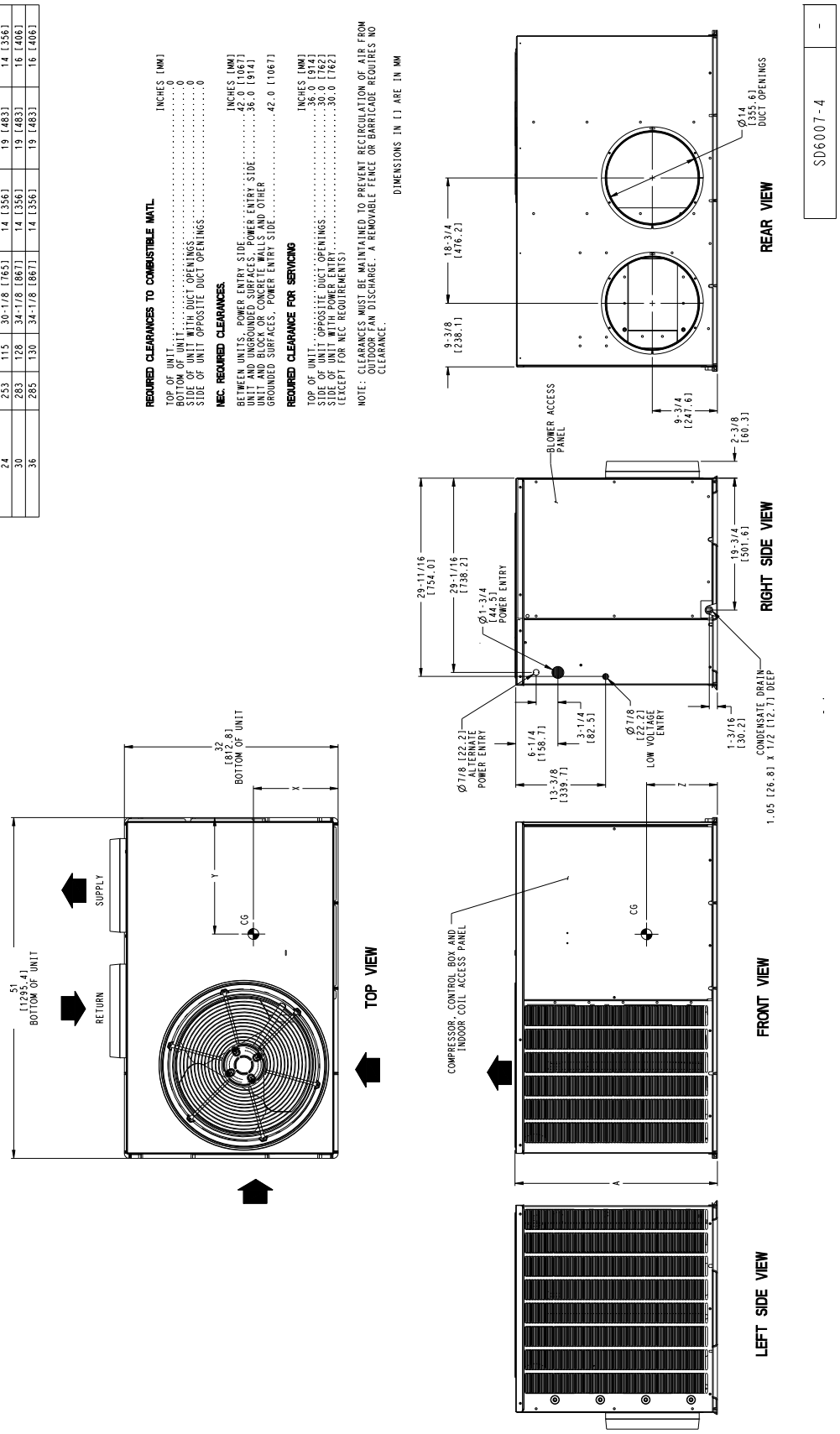

A240410

Fig. 5 – Unit Base Dimensions, 024-036

COOLING CAPACITY	UNIT WT.		UNIT HEIGHT	CENTER OF GRAVITY IN [MM]		
	LBS.	KG.	A	X	Y	Z
42	339	154	42-1/8 [1070]	14 [356]	19 [483]	19-3/4 [503]
48	358	163	42-1/8 [1070]	14 [356]	19 [483]	19-3/4 [503]
60	425	193	42-1/8 [1070]	14 [356]	19 [483]	19-3/4 [503]

REQUIRED CLEARANCES TO COMBUSTIBLE MATL.

	INCHES [MM]
TOP OF UNIT	0
BOTTOM OF UNIT	0
SIDE OF UNIT WITH DUCT OPENINGS	0
SIDE OF UNIT OPPOSITE DUCT OPENINGS	0

NEC. REQUIRED CLEARANCES.

	INCHES [MM]
BETWEEN UNITS, POWER ENTRY SIDE	42.0 [1067]
UNIT AND UNGROUNDED SURFACES, POWER ENTRY SIDE	36.0 [914]
UNIT AND BLOCK OR CONCRETE WALLS AND OTHER GROUNDED SURFACES, POWER ENTRY SIDE (EXCEPT FOR NEC REQUIREMENTS)	42.0 [1067]

REQUIRED CLEARANCE FOR SERVICING

	INCHES [MM]
TOP OF UNIT	36.0 [914]
SIDE OF UNIT OPPOSITE DUCT OPENINGS	30.0 [762]
SIDE OF UNIT WITH POWER ENTRY	30.0 [762]

NOTE: CLEARANCES MUST BE MAINTAINED TO PREVENT RECIRCULATION OF AIR FROM OUTDOOR FAN DISCHARGE. A REMOVABLE FENCE OR BARRICADE REQUIRES NO CLEARANCE.

DIMENSIONS IN [ ] ARE IN MM

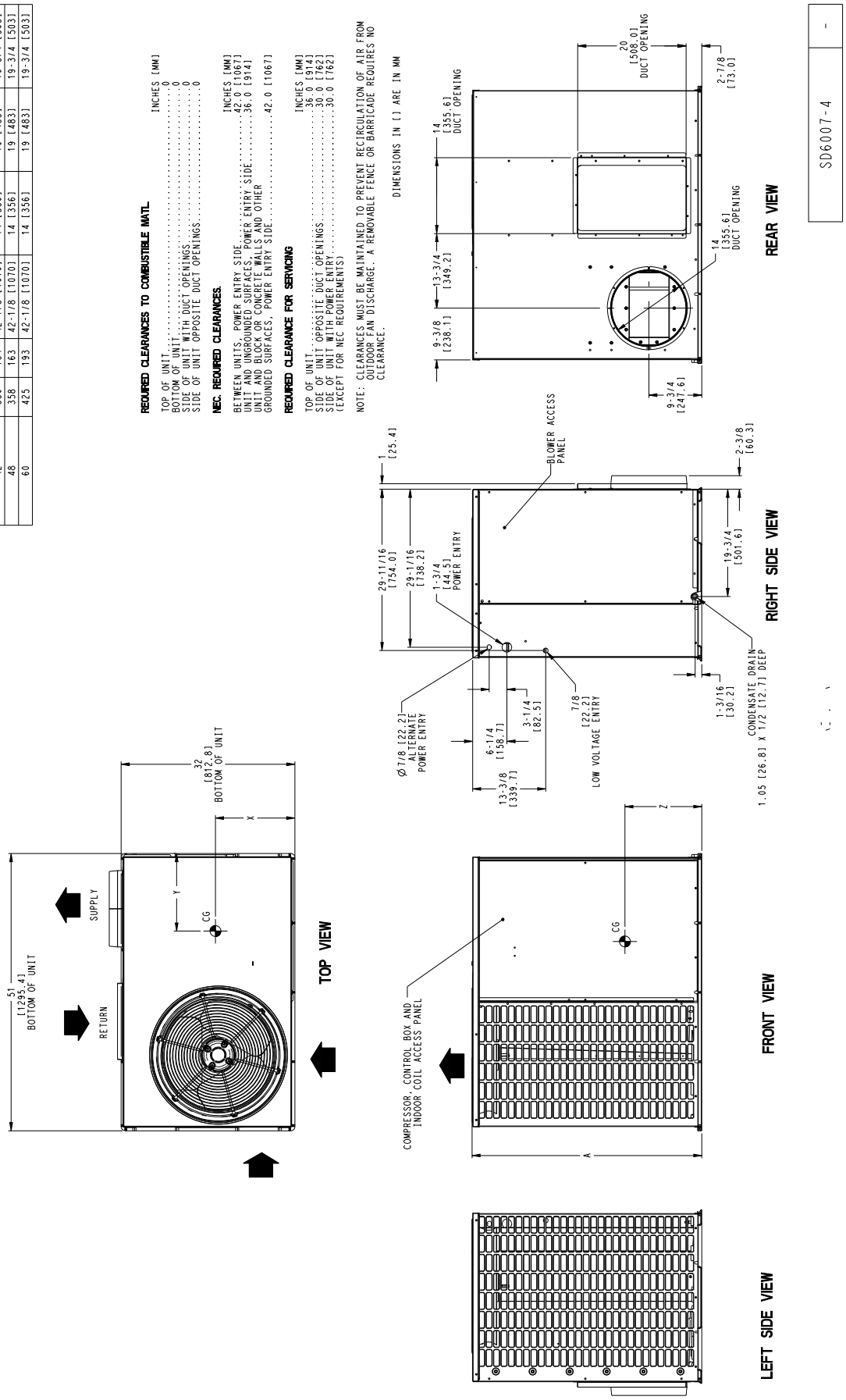

A240411

Fig. 6 – Unit Base Dimensions, 042-060

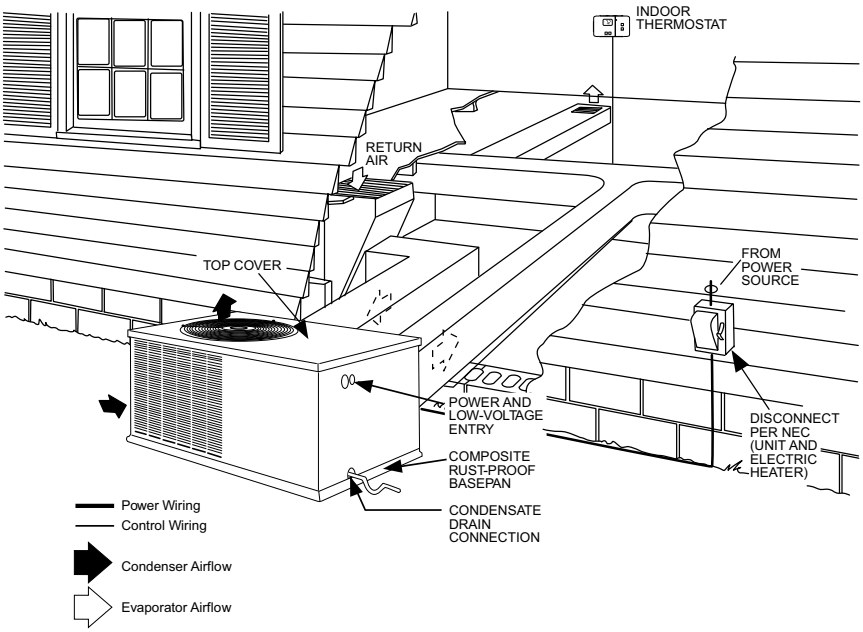

A08207

Fig. 7 – Typical Installation

*

Table 1 – Physical Data

UNIT SIZE	024	030	036	042	048	060
NOMINAL CAPACITY (ton)	2	2.5	3	3.5	4	5
SHIPPING WEIGHT (lb) (kg)	303 137.4	333 151.1	335 152.0	389 176.5	408 185.1	475 215.0
COMPRESSOR TYPE	SCROLL					
REFRIGERANT	R-454B					
REFRIGERANT QUANTITIY (lb) QUANTITY (kg)	5.80 2.6	6.75 3.1	4.75 2.2	6.5 2.9	8.25 3.7	10.50 4.8
OUTDOOR METERING DEVICE	Piston	TXV		Piston	TXV	Piston
ORIFICE ID (in.) (mm)	0.046 1.168	N/A	N/A	0.059 1.499	- -	0.070 1.778
MINIMUM CONDITIONED SPACE AREA (sq. ft)	91	106	76	106	137	167
OUTDOOR COIL ROWS...FINS/in. FACE AREA (sq. ft)	 2...20 9.1	 2...20 10.2	 2...20 10.2	 2...20 13.0	 2...20 15.5	 2...20 13.5
OUTDOOR FAN NOMINAL AIRFLOW (CFM) DIAMETER (in.) DIAMETER (mm) MOTOR HP (RPM)	 2000 20 508 1/8 (825)	 2000 20 508 1/8 (825)	 2800 20 508 1/4 (1100)	 3100 20 508 1/4 (1100)	 3100 20 508 1/4 (1100)	 3300 20 508 1/3 (1100)
REQUIRED MINIMUM DISSIPATION AIRFLOW (CFM)	160	186	133	186	239	293
INDOOR METERING DEVICE	Piston			TXV		
ORIFICE ID (in.) (mm)	0.055 1.397	0.057 1.448	0.067 1.702	N/A	N/A	N/A
INDOOR COIL ROWS...FINS/in. FACE AREA (sq. ft)	 3...12 4.3	 3…15 4.3	 3...15 4.9	 3...15 4.9	 3...15 4.9	 3...15 6.1
INDOOR BLOWER NOMINAL COOLING AIRFLOW (CFM) NOMINAL SIZE D x W (in.) (mm) MOTOR (HP)	 800 11 x 8 279 x 203 1/3	 1000 12 x 9 305 x 229 1/2	 1200 12 x 9 305 x 229 1/2	 1400 12 x 9 305 x 229 1/2	 1600 12 x 9 305 x 229 3/4	 1700 12 x 11 305 x 279 1
HIGH-PRESSURE SWITCH (psig) CUTOUT RESET (AUTO)	 650 +/- 15 420 +/- 25					
LOW-PRESSURE SWITCH (psig) CUTOUT RESET (AUTO)	 20 +/- 5 45 +/- 10					
RETURN-AIR FILTERS* THROWAWAY (in.) (mm)	 20x20x1 508x508x25	 20x24x1 508x610x25	 24x30x1 610x762x25	 24x36x1 610x914x25		

*. Required filter sizes shown are based on the AHRI (Air Conditioning, Heating & Refrigeration Institute) rated airflow at a velocity of 300 ft/min (91 m) for throwaway type or 450 ft/min (137 m) for high capacity type. Recommended filters are 1-in. (25 mm) thick.

Table 2 – Minimum Airflow for Safe Electric Heater Operation

HP Unit Size	Minimum Airflow (CFM)				
	5 kW	7.5 kW	10 kW	15 kW	20 kW
24	750	800	800	X	X
30	750	800	800	X	X
36	750	800	800	1200	X
42	750	800	800	1200	X
48	750	800	800	1200	1800
60	750	800	800	1200	1800

X = Not Approved Combination

Configuring Units for Downflow (Vertical) Discharge

Units are dedicated side supply products. They are not convertible to vertical air supply. A field-supplied plenum must be used to convert to vertical air discharge.

Step 6 – Connect Condensate Drain

NOTE: When installing condensate drain connection be sure to comply with local codes and restrictions.

To further protect against water damage, the International Mechanical Code (IMC) and local code may require a float switch be installed to shut the equipment off if the drainage system is blocked. In 24-volt wired systems, a float switch listed to UL 508 should be wired in the field "R" circuit from the "R" field connection wire of the unit leading to the thermostat.

⚠ WARNING

FIRE HAZARD

Failure to follow this warning could result in property damage, personal injury, or death. When using a float switch in a secondary condensate pan or drain line, do not wire the switch to break 24-volt power directly from the transformer "R" circuit as this will defeat the refrigerant leak dissipation functions.

Unit removes condensate through a 1-3/64 in. (27 mm) ID hole (using 3/4-in. (19 mm) ID piping or tubing) which is located at the end of the unit. See Fig. 5 - Fig. 6 for location of condensate connection.

Condensate water can be drained directly onto the roof in rooftop installations (where permitted) or onto a gravel apron in ground level installations. Install a field-supplied condensate trap at end of condensate connection to ensure proper drainage. Make sure that the outlet of the trap is at least 1 in. (25 mm) lower than the drain pan condensate connection to prevent the pan from overflowing (See Fig. 8 and Fig. 9). When using a gravel apron, make sure it slopes away from the unit.

If the installation requires draining the condensate water away from the unit, install a 2-in. (51 mm) trap using a 3/4-in. (19 mm) ID tubing or pipe. (See Fig. 8 and Fig. 9.) Make sure that the outlet of the trap is at least 1 in. (25 mm) lower than the unit drain-pan condensate connection to prevent the pan from overflowing. Prime the trap with water. Connect a drain tube using a minimum of 3/4-in. (19 mm) PVC, 3/4-in. (19 mm) CPVC, or 3/4-in. copper pipe (all field supplied). Do not undersize the tube. Pitch the drain tube downward at a slope of at least 1 in. (25 mm) for every 10 ft (3 m) of horizontal run. Be sure to check the drain tube for leaks. Prime trap at the beginning of the cooling season start-up. Allowable glues for condensate trap connection are: Standard ABS, CPVC, or PVC cement.

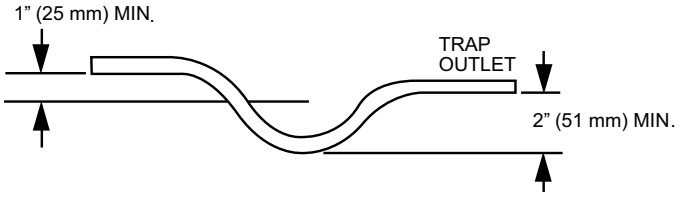

Fig. 8 – Condensate Trap

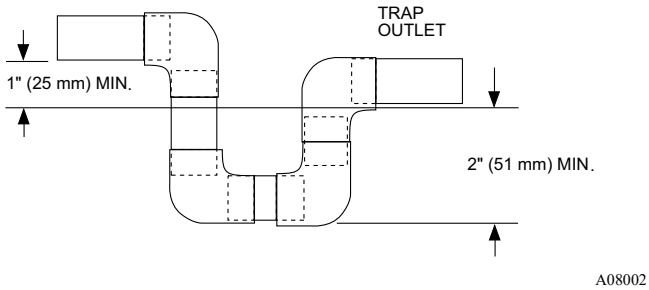

Fig. 9 – PVC Condensate Trap

Step 7 – Install Electrical Connections

⚠ WARNING

ELECTRICAL SHOCK HAZARD

Failure to follow this warning could result in personal injury or death.

The unit cabinet must have an uninterrupted, unbroken electrical ground to minimize the possibility of personal injury if an electrical fault should occur. This ground may consist of an electrical wire connected to the unit ground screw in the control compartment, or conduit approved for electrical ground when installed in accordance with NEC, ANSI/NFPA 70 American National Standards Institute/ National Fire Protection Association (latest edition) (in Canada, Canadian Electrical Code CSA C22.1) and local electrical codes.

⚠ CAUTION

UNIT COMPONENT DAMAGE HAZARD

Failure to follow this caution may result in damage to the unit being installed.

1. Make all electrical connections in accordance with NEC ANSI/NFPA 70 (latest edition) and local electrical codes governing such wiring. In Canada, all electrical connections must be in accordance with CSA standard C22.1 Canadian Electrical Code Part 1 and applicable local codes. Refer to unit wiring diagram.
2. Use only copper conductor for connections between field-supplied electrical disconnect switch and unit. DO NOT USE ALUMINUM WIRE.
3. Be sure that high-voltage power to unit is within operating voltage range indicated on unit rating plate. On 3-phase units, ensure phases are balanced within 2 percent. Consult local power company for correction of improper voltage and/or phase imbalance.
4. Do not damage internal components when drilling through any panel to mount electrical hardware, conduit, etc.
5. Route field power supply(s) away from areas that could be damaged by lawn and garden equipment or other accidental damage.

High-Voltage Connections

The unit must have a separate electrical service with a field-supplied, waterproof disconnect switch mounted at, or within sight from the unit. Refer to the unit rating plate, NEC and local codes for maximum fuse/circuit breaker size and minimum circuit amps (ampacity) for wire sizing.

The field-supplied disconnect may be mounted on the unit over the high-voltage inlet hole when the standard power and low-voltage entry points are used. See Fig. 10 and Fig. 11 for acceptable location.

Operation of unit on improper line voltage constitutes abuse and may cause unit damage that could affect warranty.

Routing Power Leads into Unit

Use only copper wire between disconnect and unit. The high-voltage leads should be in a conduit until they enter the unit; conduit termination at the unit must be watertight. Run the high-voltage leads through the hole on the control box side of the unit (See Fig. 10). When the leads are inside the unit, run leads to the control box (See Fig. 11). Connect leads to the black and yellow wires (See Fig. 12).

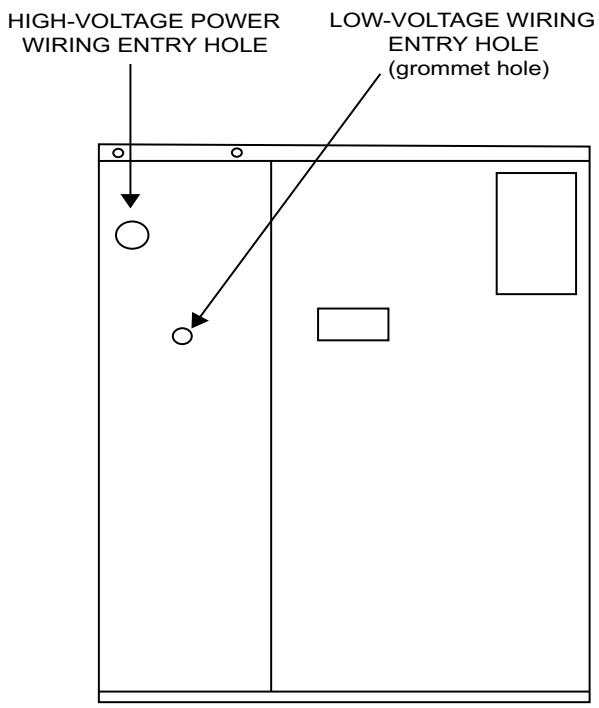

A08407

Fig. 10 – Unit Electrical Connection

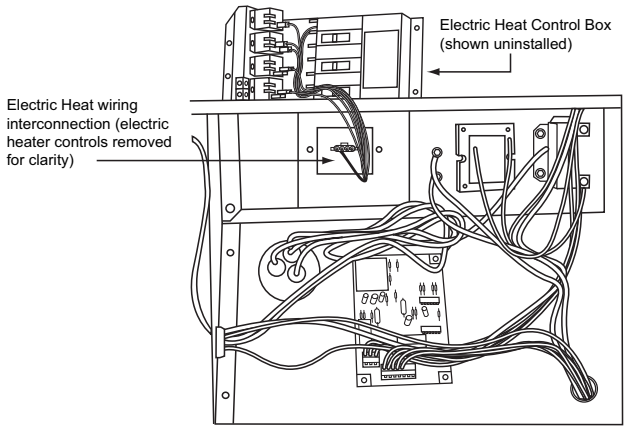

A10031

Fig. 11 – Control Box Wiring

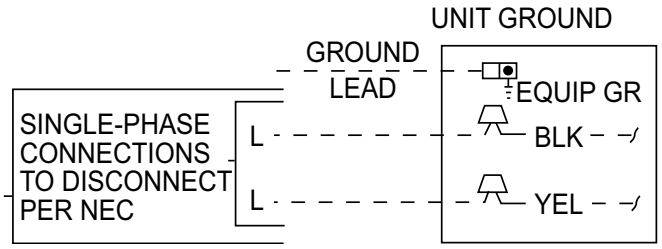

A10022

Fig. 12 – Line Power Connections

Connecting Ground Lead to Unit Ground

Connect the ground lead to the chassis using the unit ground in the control box (See Fig. 11 and Fig. 12).

Routing Control Power Wires (24-V)

Form a drip-loop with the thermostat leads before routing them into the unit. Route the thermostat leads through grommeted hole provided in unit into unit control box (See Fig. 10). Connect thermostat leads and unit power leads as shown in Fig. 12 - Fig. 16.

The unit transformer supplies 24-v power for complete system including accessory electrical heater. Transformer is factory wired for 230-v operation.

Unit main harness contains a 3 amp automotive style replaceable fuse. If transformer secondary voltage is not available at red and brown leads in unit low voltage box, check fuse in red lead near transformer. Replace with Littelfuse brand, part number 257003.

Unit main harness also contains a 1k ohm, 3 watt load resistor wired across low voltage leads “G” and “C”. Purpose of resistor is to provide a small electrical load for the indoor thermostat fan circuit to ensure reliable operation.

Accessory Electric Heat Wiring

Refer to accessory electric heat installation instructions for information on installing accessory electric heat. Accessory electric heat wiring is shown in Fig. 15 - Fig. 17.

NOTE: When installing an accessory electric heater, the high voltage wire harness pass-through must be sealed with silicone or equivalent at the partition in order to comply with the 2% or less air leakage certification.

Leak Dissipation System

This unit is equipped with the Puron Advance (R-454B) leak detection and dissipation system. This system is comprised of a refrigerant sensor, and dissipation control board.

The dissipation control board monitors the refrigerant sensor continuously. If a sufficient concentration of refrigerant is detected within the conditioned air stream, the dissipation board will remove any call for cooling or heating and energize continuous fan. Once the refrigerant concentration drops below the threshold, the dissipation board will do 3 things: 1) The continuous fan will remain on for 5 minutes, 2) Any call for cooling will still be removed, and 3) Any call for electrical resistance heat or gas heat (non-heat pump) will be allowed. If, after the 5 minute dissipation period, the refrigerant concentration remains below the threshold, the dissipation board will restore thermostat calls for cooling and blower operation.

Leak Dissipation Control Board (DSB)

The leak dissipation control board (Fig. 13) is located in the control box. There are 2 LED indicators, which are viewable after removing the control access panel. The amber LED provides system status.

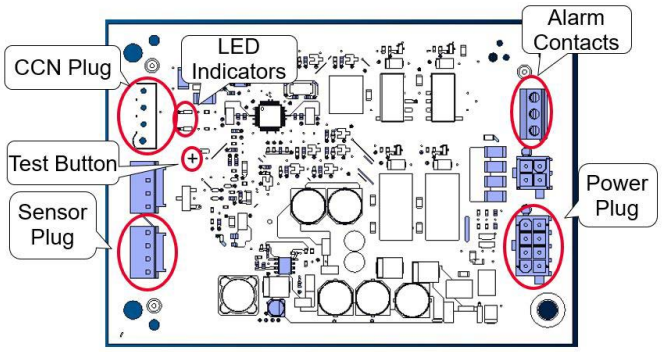

Fig. 13 – Dissipation Board

Test Button

IMPORTANT: Press the Test Button for approximately ONE SECOND to enter Test Mode. Pressing the Test button for a longer period can possibly clear all fault code history (Table 3).

Table 3 – Dissipation Board Test Button Functions

Hold Button Time (sec)	Function
1-4	Dissipation Mode for 60 sec
5-29	Display flash code history
30+	Flash code 6
3 rapid presses	Clear flash code history

A test button on the DSB may be used to verify proper dissipation system operation under each test condition listed below (Table 4). After pressing the test button, system will enter dissipation mode for 60 seconds to verify correct operation.

Table 4 – Required Operational Checks to Ensure Proper Dissipation System Function

Test #	T-Stat Call	Compressor	Indoor Fan	Electric/Gas Heat
Normal Operation				
1	None	Off	Off	Off
2	Cool	On	On	Off
3	Heat	Off	On	On
Dissipation Activated				
4	None	Off	On	Off
5	Cool	Off	On	Off
6	Heat	Off	On	Off

Required Minimum Dissipation Airflow

The Required Minimum Dissipation Airflow is listed in Table 1, is based on refrigerant charge, and must be met or exceeded in Continuous Fan Mode. Refer to Table 7 for available blower speeds and the associated CFM performance.

⚠ WARNING

PERSONAL INJURY AND PROPERTY DAMAGE HAZARD

Required Minimum Dissipation Airflow must be met or exceeded with the continuous fan speed selected.

Minimum Conditioned Space Area

The Minimum Conditioned Space Area (Table 1) is the smallest allowed area allowed to be served by this unit for proper dissipation and is based on the factory charge amount. The Minimum Conditioned Space Area must not be used in unit sizing, as the small area, will likely result in excessive short-cycling of the unit.

Example:

A 036 size unit will be installed in a residential home with a conditioned space of 1800 sq. ft. (Conditioned space to be served entirely by the unit). The following speeds are preliminarily selected by the installer with the resultant external static pressures:

The red blower speed is selected for the continuous fan/cooling speed, which delivers 1245 CFM at .5 in. W.C. external static pressure.

From Table 1, the minimum conditioned space area for the 36 size is 76 sq. ft.. Since 1800 sq. ft. is greater then 76 sq. ft., the conditioned space is sufficient.

Also from Table 1, the required minimum dissipation airflow for the 36 size unit is 133 CFM. Since 1245 CFM is greater than 133 CFM, the continuous fan speed is sufficient to deliver the required minimum dissipation airflow.

Pre-Start-up

⚠ WARNING

FIRE, EXPLOSION, ELECTRICAL SHOCK HAZARD

Failure to follow this warning could result in personal injury or death and/or property damage.

1. Follow recognized safety practices and wear protective goggles when checking or servicing refrigerant system.
2. Relieve and recover all refrigerant from system before touching or disturbing compressor plug if refrigerant leak is suspected around compressor terminals.
3. Never attempt to repair soldered connection while refrigerant system is under pressure.
4. Do not use torch to remove any component. System contains oil and refrigerant under pressure.
5. To remove a component, wear protective goggles and proceed as follows:
   a. Shut off electrical power to unit and install lockout tag.
   b. Relieve and reclaim all refrigerant from system using both high- and low-pressure ports.
   c. Cut component connecting tubing with tubing cutter and remove component from unit.
   d. Carefully unsweat remaining tubing stubs when necessary. Oil can ignite when exposed to torch flame.

Proceed as follows to inspect and prepare the unit for initial start-up:

1. Remove all access panels.
2. Read and follow instructions on all DANGER, WARNING, CAUTION, and INFORMATION labels attached to, or shipped with unit.

⚠ WARNING

PERSONAL INJURY AND ENVIRONMENTAL HAZARD

Failure to relieve system pressure could result in personal injury and/or death.

Relieve pressure and recover all refrigerant before system repair or final unit disposal.

Wear safety glasses and gloves when handling refrigerant. Keep torches and other ignition sources away from refrigerants and oils.

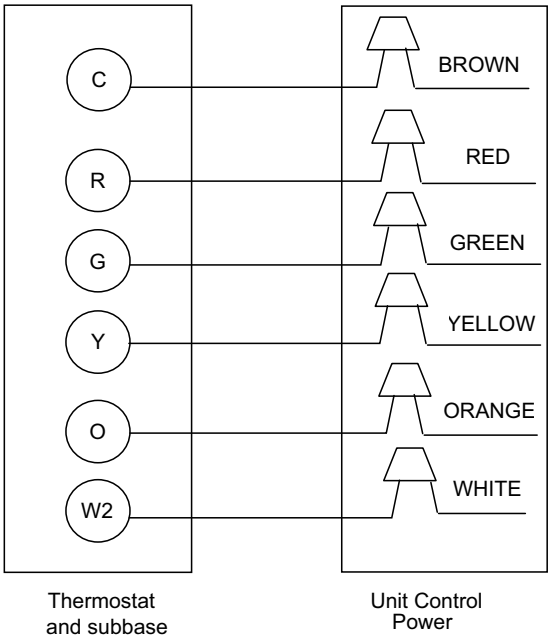

Fig. 14 – Control Connections

3. Make the following inspections:
   a. Inspect for shipping and handling damages, such as broken lines, loose parts, disconnected wires, etc.
   b. Inspect all field- and factory-wiring connections. Be sure that connections are completed and tight.
   c. Ensure wires do not touch refrigerant tubing or sharp sheet metal edges.
   d. Inspect coil fins. If damaged during shipping and handling, carefully straighten fins with a fin comb.
4. Verify the following conditions:
   a. Make sure that outdoor-fan blade is correctly positioned in fan orifice. See Outdoor Fan Adjustment section.
   b. Make sure that air filter is in place.
   c. Make sure that condensate drain pan and trap are filled with water to ensure proper drainage.
   d. Make sure that all tools and miscellaneous loose parts have been removed.

Start-up

Step 1 – Check for Refrigerant Leaks

Work procedure for service:

⚠ WARNING

EXPLOSION HAZARD

Failure to follow this warning could result in death, serious personal injury, and/or property damage.

Never use air or gases containing oxygen for leak testing or operating refrigerant compressors. Pressurized mixtures of air or gases containing oxygen can lead to an explosion.

1. All maintenance staff and others working in the local area shall be instructed on the nature of work being performed. Any nearby confined space work shall be avoided.
2. If any hot work is to be conducted on the refrigeration system or associated parts, a fire extinguisher shall be available on hand. A

dry powder or CO2 fire extinguisher shall be located near the refrigerant charge recovery area.

3. Potential ignition sources, including cigarette smoking, must not be used by the technician and must be kept far away from the unit site.
4. Ensure that electrical power is available to run recovery equipment prior moving to the next step.
5. Using a R-454B leak detector, check around the area of the unit for presence of refrigerant. Note: Leak detector must be non-sparking and adequately sealed. Under no circumstances shall potential sources of ignition be used for detection of leaks, including leak detection equipment. A halide torch (or any other detector using a naked flame) shall not be used. Electronic leak detectors may be used to detect refrigerant leaks, but in the case of R-454B, the sensitivity may not be adequate or may need re-calibration (Detection equipment shall be calibrated in a refrigerant-free area). Leak detection equipment shall be calibrated to R-454B. If a leak above 20% of the LFL is found, proceed to recovery.
6. Shut off power to unit.
7. Before beginning recovery of the refrigerant:
   a. Make sure that handling equipment is available, if needed, to handle the refrigerant recovery cylinders.
   b. All personal protective equipment is available, and must be used correctly.
   c. Recovery process must be performed by an EPA-certified technician.
   d. All recovery equipment and cylinders must conform to appropriate standards and be suitable for the recovery of FLAMMABLE REFRIGERANTS (R-454B).
8. Recovery process:
   Follow recovery process outlined in the DECOMMISIONING SECTION.
9. Should any installation/service work on the A2L refrigerant system be needed, non-sparking tools are required. If the refrigerant system is opened, a refrigerant detector should be used to check for leaks. Open flames or other ignition sources should not be present, except during brazing. Brazing should only take place on refrigerant tubes that are open to the atmosphere or have been properly evacuated.
10. Repair leak following accepted practices.
11. If compressor or compressor oil is to be removed, ensure that they have been evacuated to 200 microns or less to make certain that R-454B does not remain within the lubricant. The evacuation process shall be carried out prior to returning the compressor to the supplier. The crankcase electric heat may be used to accelerate the compressor evacuation process. A torch must not be used. When oil is drained from a system, it shall be carried out safely.

NOTE: Install a new filter drier whenever the system has been opened for repair.

NOTE: Refrigerant cylinders used for charging must be kept in appropriate position and grounded to earth before charging. Hose length should be kept to a minimum. Care should be taken not to overcharge the system.

12. Add a small charge of Puron Advance (R-454B) refrigerant vapor to system and leak-test.
13. If no additional leaks are found, recover refrigerant from refrigerant system (Using Recovery steps outlined in the Decommissioning section) and evacuate to 500 microns.
14. Charge unit with Puron Advance (R-454B) refrigerant, using an accurate scale. Refer to unit rating plate for required charge. Do not overfill the system.
15. Label the system with the refrigerant charge amount.
16. Conduct follow-up leak test prior to leaving the job site.

Step 2 – Start-Up Cooling and Make Adjustments

Complete the required procedures given in the Pre-Start-Up section before starting the unit. Do not jumper any safety devices when operating the unit. Do not operate the unit in cooling mode when the outdoor temperature is below 40°F (4.4°C) (unless accessory low-ambient kit is installed). Do not rapid cycle the compressor. Allow 5 min. between “on” cycles to prevent compressor damage.

Checking Cooling and Heating Control Operation

Start and check the unit for proper cooling control operation as follows:

1. Place room thermostat SYSTEM switch in OFF position. Observe that blower motor starts when FAN switch is placed in ON position and shuts down within 60 sec. when FAN switch is placed in AUTO position.
2. Place SYSTEM switch in COOL position and FAN switch in AUTO position. Set control below room temperature. Observe that compressor, outdoor fan, and indoor blower motors start and that reversing valve shifts. Observe that cooling cycle shuts down when control setting is satisfied. Reversing valve (RV) remains energized.
3. Place system switch in HEAT position. Observe that compressor, indoor fan and outdoor fan energize (Reversing Valve is deenergized in heat pump heating mode). Set control above room temperature. Observe that heating cycle shuts down when control setting is satisfied.
4. When using an automatic changeover room thermostat, place both SYSTEM and FAN switches in AUTO positions. Observe that unit operates in Cooling mode when temperature control is set to call for Cooling (below room temperature), and unit operates in Heating mode when temperature control is set to call for Heating (above room temperature).

Step 3 – Refrigerant Charge

Refrigerant Charge — The refrigerant system is fully charged with Puron Advance (R-454B) refrigerant and is tested and factory sealed. Amount of refrigerant charge is listed on unit nameplate and in Table 1. Unit must operate a minimum of 15 minutes before checking charge.

NOTE: Adjustment of the refrigerant charge is not required unless the unit is suspected of not having the proper Puron Advance (R-454B) charge. If adjusting charge, an R-454B leak detector must be actively monitoring during the process.

NOTE: Unit sizes 024-042 have fixed orifice refrigerant metering devices. There is a different charging procedure for both expansion devices. Refer to the correct procedure for your unit.

No Charge

Use standard evacuating techniques. After evacuating system, weigh in the specified amount of refrigerant (refer to Table 1).

Low Charge Cooling

024-036 Units, Fixed Indoor Metering Device:

1. Operate unit a minimum of 10 minutes before checking charge.
2. Measure suction pressure by attaching an accurate gauge to compressor suction side service port.
3. Measure suction side temperature by attaching an accurate thermisitor type or electronic thermometer to suction line about 10 in. from compressor.
4. Measure outdoor air dry-bulb temperature with thermometer.
5. Measure indoor air (return air) wet-bulb temperature with a sling psychrometer or electronic equivalent.
6. Using Superheat Charging Table (Table 5) find outdoor temperature and indoor air wet-bulb temperature. At this intersection note superheat. Where a dash (--) appears on table do not attempt to charge unit under these conditions or refrigerant slugging may

occur. In this situation refrigerant must be evacuated and weighed in. See rating plate for charge quantity.

7. Refer to Required Suction Tube Temp. Table (Table 5). Find superheat temperature located in Step 6 and suction pressure. At this intersection note suction line temperature.
8. If unit has a higher suction line temperature than charted temperature, add refrigerant until charted temperature is reached.
9. If unit has a lower suction line temperature than charted temperature, reclaim refrigerant until charted temperature is reached.
10. If outdoor air temperature or pressure at suction port changes, charge to new suction line temperature indicated on chart.

042-060 Units, Indoor TXV

1. Measure Discharge line pressure by attaching a gauge to the service port.
2. Measure the Liquid line temperature by attaching a temperature sensing device to it.
3. Insulate the temperature sensing device so that the Outdoor Ambient doesn't affect the reading.
4. Refer to the required Subcooling in Table 6 based on the model size and the Outdoor Ambient temperature.
5. Interpolate if the Outdoor ambient temperature lies in between the table values.
6. Find the Pressure Value in the table corresponding to the measured Pressure of the Compressor Discharge line.
7. Read across from the Pressure reading to obtain the Liquid line temperature for a required Subcooling.
8. Add Charge if the measured temperature is higher than the table value.
9. Remove charge if the measured temperature is lower than the table value.

Heating Mode Charge

Do not attempt to adjust charge by cooling methods while in heat pump heating mode. Recover refrigerant and weigh in according to unit data plate refrigerant data.

Table 5 – Superheat Charging

SUPERHEAT CHARGING TABLE
(SUPERHEAT °F (°C) AT COMPRESSOR SUCTION SERVICE PORT)

OUTDOOR TEMP °F (°C)	EVAPORATOR ENTERING AIR °F (°C) WB													
	50 (10)	52 (11)	54 (12)	56 (13)	58 (14)	60 (16)	62 (17)	64 (18)	66 (19)	68 (20)	70 (21)	72 (22)	74 (23)	76 (24)
55 (12.7)	9 (5.0)	12 (6.7)	14 (7.8)	17 (9.4)	20 (11)	23 (13)	26 (14)	29 (16)	32 (18)	35 (19)	37 (21)	40 (22)	42 (23)	45 (25)
60 (15.6)	7 (3.9)	10 (5.6)	12 (6.7)	15 (8.3)	18 (10)	21 (12)	24 (13)	27 (15)	30 (17)	33 (18)	35 (19)	38 (21)	40 (22)	43 (24)
65 (18.3)	–	6 (3.3)	10 (5.6)	13 (7.2)	16 (8.9)	19 (11)	21 (12)	24 (13)	27 (15)	30 (17)	33 (18)	36 (20)	38 (21)	41 (23)
70 (21.1)	–	–	7 (3.9)	10 (5.6)	13 (7.2)	16 (8.9)	19 (11)	21 (12)	24 (13)	27 (15)	30 (17)	33 (18)	36 (20)	39 (22)
75 (23.9)	–	–	–	6 (3.3)	9 (5.0)	12 (6.7)	15 (8.3)	18 (10)	21 (12)	24 (13)	28 (16)	31 (17)	34 (19)	37 (21)
80 (26.7)	–	–	–	–	5 (2.8)	8 (4.4)	12 (6.7)	15 (8.3)	18 (10)	21 (12)	25 (14)	28 (16)	31 (17)	35 (19)
85 (29.4)	–	–	–	–	–	–	8 (4.4)	11 (6.1)	15 (8.3)	19 (11)	22 (12)	26 (14)	30 (17)	33 (18)
90 (32.2)	–	–	–	–	–	–	5 (2.8)	9 (5.0)	13 (7.2)	16 (8.9)	20 (11)	24 (13)	27 (15)	31 (17)
95 (35.0)	–	–	–	–	–	–	–	6 (3.3)	10 (5.6)	14 (7.8)	18 (10)	22 (12)	25 (14)	29 (16)
100 (37.7)	–	–	–	–	–	–	–	–	8 (4.4)	12 (6.7)	15 (8.3)	20 (11)	23 (13)	27 (15)
105 (40.6)	–	–	–	–	–	–	–	–	5 (2.8)	9 (5.0)	13 (7.2)	17 (9.4)	22 (12)	26 (14)
110 (43.3)	–	–	–	–	–	–	–	–	–	6 (3.3)	11 (6.1)	15 (8.3)	20 (11)	25 (14)
115 (46.1)	–	–	–	–	–	–	–	–	–	–	8 (4.4)	14 (7.8)	18 (10)	23 (13)

REQUIRED SUCTION TUBE TEMPERATURE °F (°C) R-454B
(MEASURED AT COMPRESSOR SUCTION SERVICE PORT)

SUPERHEAT TEMP °F (°C)	SUCTION PRESSURE AT SUCTION SERVICE PORT PSIG (kPa)									
	107 (738)	111 (766)	116 (800)	120 (828)	125 (862)	130 (897)	135 (931)	140 (966)	145 (1000)	150 (1034)
0 (0)	40 (4.4)	42 (5.6)	44 (6.7)	46 (7.8)	48 (8.9)	50 (10)	52 (11)	54 (12)	56 (13)	58 (14)
2 (1.1)	42 (5.6)	44 (6.7)	46 (7.8)	48 (8.9)	50 (10)	52 (11)	54 (12)	56 (13)	58 (14)	60 (16)
4 (2.2)	44 (6.7)	46 (7.8)	48 (8.9)	50 (10)	52 (11)	54 (12)	56 (13)	58 (14)	60 (16)	62 (17)
6 (3.3)	46 (7.8)	48 (8.9)	50 (10)	52 (11)	54 (12)	56 (13)	58 (14)	60 (16)	62 (17)	64 (18)
8 (4.4)	48 (8.9)	50 (10)	52 (11)	54 (12)	56 (13)	58 (14)	60 (16)	62 (17)	64 (18)	66 (19)
10 (5.6)	50 (10)	52 (11)	54 (12)	56 (13)	58 (14)	60 (16)	62 (17)	64 (18)	66 (19)	68 (20)
12 (6.7)	52 (11)	54 (12)	56 (13)	58 (14)	60 (16)	62 (17)	64 (18)	66 (19)	68 (20)	70 (21)
14 (7.8)	54 (12)	56 (13)	58 (14)	60 (16)	62 (17)	64 (18)	66 (19)	68 (20)	70 (21)	72 (22)
16 (8.9)	56 (13)	58 (14)	60 (16)	62 (17)	64 (18)	66 (19)	68 (20)	70 (21)	72 (22)	74 (23)
18 (10.0)	58 (14)	60 (16)	62 (17)	64 (18)	66 (19)	68 (20)	70 (21)	72 (22)	74 (23)	76 (24)
20 (11.1)	60 (16)	62 (17)	64 (18)	66 (19)	68 (20)	70 (21)	72 (22)	74 (23)	76 (24)	78 (26)
22 (12.2)	62 (17)	64 (18)	66 (19)	68 (20)	70 (21)	72 (22)	74 (23)	76 (24)	78 (26)	80 (27)
24 (13.3)	64 (18)	66 (19)	68 (20)	70 (21)	72 (22)	74 (23)	76 (24)	78 (26)	80 (27)	82 (28)
26 (14.4)	66 (19)	68 (20)	70 (21)	72 (22)	74 (23)	76 (24)	78 (26)	80 (27)	82 (28)	84 (29)
28 (15.6)	68 (20)	70 (21)	72 (22)	74 (23)	76 (24)	78 (26)	80 (27)	82 (28)	84 (29)	86 (30)
30 (16.7)	70 (21)	72 (22)	74 (23)	76 (24)	78 (26)	80 (27)	82 (28)	84 (29)	86 (30)	88 (31)
32 (17.8)	72 (22)	74 (23)	76 (24)	78 (26)	80 (27)	82 (28)	84 (29)	86 (30)	88 (31)	90 (32)
34 (18.9)	74 (23)	76 (24)	78 (26)	80 (27)	82 (28)	84 (29)	86 (30)	88 (31)	90 (32)	92 (33)
36 (20.0)	76 (24)	78 (26)	80 (27)	82 (28)	84 (29)	86 (30)	88 (31)	90 (32)	92 (33)	94 (34)
38 (21.1)	78 (26)	80 (27)	82 (28)	84 (29)	86 (30)	88 (31)	90 (32)	92 (33)	94 (34)	96 (36)
40 (22.2)	80 (27)	82 (28)	84 (29)	86 (30)	88 (31)	90 (32)	92 (33)	94 (34)	96 (36)	98 (37)

COOLING ONLY CHARGING PROCEDURE

1. Operate unit a minimum of 10 minutes before checking charge.
2. Measure suction pressure by attaching an accurate gauge to compressor suction side service port.
3. Measure suction side temperature by attaching an accurate thermisitor type or electronic thermometer to suction line about 10 inches from compressor.
4. Measure outdoor air dry-bulb temperature with thermometer.
5. Measure indoor air (return air) wet-bulb temperature with a sling psychrometer or electronic equivalent.
6. Using Superheat Charging Table find outdoor temperature and indoor air wet-bulb temperature. At this intersection note superheat. Where a dash (–) appears on table do not attempt to charge unit under these conditions or refrigerant slugging may occur. In this situation refrigerant must be evacuated and weighed in. See rating plate for charge quantity.
7. Refer to Required Suction Tube Temp. table. Find superheat temperature located in step 6 and suction pressure. At this intersection note suction line temperature.
8. If unit has a higher suction line temperature than charted temperature, add refrigerant until charted temperature is reached.
9. If unit has a lower suction line temperature than charted temperature, reclaim refrigerant until charted temperature is reached.
10. If outdoor air temperature or pressure at suction port changes, charge to new suction line temperature indicated on chart.

350343-701 REV. -

A240401

Table 6 – Required Subcooling

Model Size	Required Subcooling °F(°C) — Outdoor Ambient Temperature °F(°C) 75 (24)	85 (29)	95 (35)	105 (41)	115 (46)
042	16 (8.9)	16 (8.9)	16 (8.9)	16 (8.9)	16 (8.9)
048	16 (8.9)	17 (9.4)	17 (9.4)	17 (9.4)	18 (10.0)
060	16 (8.9)	15 (8.3)	15 (8.3)	15 (8.3)	14 (7.8)

Notes:

System is factory-charged to provide proper subcooling performance. If system is opened or if performance issues are suspected, then subcooling must be checked

Charging Procedure:

1 - Measure Discharge line pressure by attaching a gauge to the service port.
2 - Measure the Liquid line temperature by attaching a temperature sensing device to it.
3 - Insulate the temperature sensing device so that the Outdoor Ambient doesn't affect the reading
4 - Refer to the required Subcooling in the table based on the model size and the Outdoor Ambient temperature.
5 - Interpolate if the Outdoor Ambient temperature lies in between the table values.
6 - Find the Pressure Value in the table corresponding to the measured Pressure of the Compressor Discharge line.
7 - Read across from the Pressure reading to obtain the Liquid line temperature for a required Subcooling.
8 - Add Charge if the measured temperature is higher than the table value.
9 - Remove charge if the measured temperature is lower than the table value.

Required Liquid Line Temperature for a Specific Subcooling (R-454B)

Pressure (psig)	Required Subcooling (°F) 5	10	15	20	25
189	65	60	55	50	45
196	67	62	57	52	47
203	69	64	59	54	49
210	71	66	61	56	51
217	73	68	63	58	53
224	75	70	65	60	55
231	77	72	67	62	57
238	79	74	69	64	59
245	81	76	71	66	61
252	83	78	73	68	63
260	85	80	75	70	65
268	87	82	77	72	67
276	89	84	79	74	69
284	91	86	81	76	71
292	93	88	83	78	73
300	95	90	85	80	75
309	97	92	87	82	77
318	99	94	89	84	79
327	101	96	91	86	81
336	103	98	93	88	83
345	105	100	95	90	85
354	107	102	97	92	87
364	110	105	100	95	90
374	111	106	101	96	91
384	113	108	103	98	93
394	115	110	105	100	95
404	117	112	107	102	97
414	118	113	108	103	98
424	120	115	110	105	100
434	122	117	112	107	102
444	124	119	114	109	104
454	126	121	116	111	106
464	127	122	117	112	107
474	129	124	119	114	109
484	131	126	121	116	111
494	132	127	122	117	112
504	134	129	124	119	114
514	136	131	126	121	116
524	137	132	127	122	117
534	139	134	129	124	119

351803-701 REV. A

Pressure (kPa)	Required Subcooling (°C) 3	6	8	11	14
1303	18	16	13	10	7
1351	19	17	14	11	8
1399	21	18	15	12	9
1448	22	19	16	13	11
1496	23	20	17	14	12
1544	24	21	18	16	13
1593	25	22	19	17	14
1641	26	23	21	18	15
1689	27	24	22	19	16
1737	28	26	23	20	17
1792	29	27	24	21	18
1848	31	28	25	22	19
1903	32	29	26	23	21
1958	33	30	27	24	22
2013	34	31	28	26	23
2068	35	32	29	27	24
2130	36	33	31	28	25
2192	37	34	32	29	26
2254	38	36	33	30	27
2316	39	37	34	31	28
2378	41	38	35	32	29
2440	42	39	36	33	31
2509	43	41	38	35	32
2578	44	41	38	36	33
2647	45	42	39	37	34
2716	46	43	41	38	35
2785	47	44	42	39	36
2854	48	45	42	39	37
2923	49	46	43	41	38
2992	50	47	44	42	39
3061	51	48	46	43	40
3130	52	49	47	44	41
3199	53	50	47	44	42
3268	54	51	48	46	43
3337	55	52	49	47	44
3406	56	53	50	47	44
3475	57	54	51	48	46
3544	58	55	52	49	47
3612	58	56	53	50	47
3681	59	57	54	51	48

A240412

Step 4 – Indoor Airflow and Airflow Adjustments

⚠ WARNING

UNIT OPERATION HAZARD

Failure to follow this caution may result in equipment damage or improper operation.

For cooling operation, the recommended airflow is 350 to 450 cfm for each 12,000 Btuh of rated cooling capacity.

Table 7 shows wet coil air delivery for horizontal discharge units.

NOTE: Be sure that all supply- and return-air grilles are open, free from obstructions, and adjusted properly.

⚠ WARNING

ELECTRICAL SHOCK HAZARD

Failure to follow this warning could result in personal injury or death.

Disconnect electrical power to the unit and install lockout tag before changing blower speed.

Blower speed tap can be changed by replacing the factory installed blue low speed tap wire (cooling) with the unused black high speed wire in unit control box. The red medium speed wire is factory installed to operate with a call for supplemental electric heat. See unit wiring diagram.

Be sure new airflow meets the range noted above and minimum electric heat CFM, if equipped. Refer to Table 2 and Table 7.

All model sizes are factory wired or rated airflow operation.

Step 5 – Sequence of Operation

Fan Operation

The FAN switch on the thermostat controls indoor fan operation. When the FAN switch is placed in the ON position, the indoor (evaporator) fan motor (IFM) is energized through the G terminal on the thermostat. The motor's internal logic then provides power to the indoor (evaporator) fan motor (IFM). The IFM will run continuously when the FAN switch is set to ON.

When the FAN switch is set to AUTO, the thermostat deenergizes the IFM (provided there is not a call for cooling). The contacts open and the IFM is deenergized. The IFM will be energized only when there is a call for cooling, in heat pump heating mode or if the unit is equipped with accessory electric heat, the indoor-fan motor will also run while the accessory electric heat is energized.

NOTE: Motors on this product are programmed for 60 second time delay on tap 1 and 30 second time delay on tap 2. There is no time delay on tap 3. The indoor fan will remain ON for the set time delay after G or W2 is de-energized.

Cooling Operation

With a call for cooling (Y), the compressor, outdoor fan, and indoor fan start immediately. When the cooling demand is met, Y de-energizes, shutting the compressor, indoor fan and the outdoor fan.

Heating Operation

With a call for heating (Y), the compressor, outdoor fan, and indoor fan start immediately. If Y cannot satisfy the heating demand, the auxiliary or backup heat (W2) energizes. In case of staged heating, W3 is energized if the demand is not met. When heating demand is met, W3, W2 and Y sequentially de-energize shutting the compressor, indoor fan and the outdoor fan.

Continuous Fan

With the continuous indoor fan option selected on the thermostat, G is continuously energized. The continuous fan speed will be the same as the cooling fan speed.

Demand Defrost Mode

The defrost mode is factory set to an initial 60-minute time interval. It may also be adjusted to an initial interval of 30, 90, or 120 minutes. During operation, the control optimizes current defrost time based on the previous defrost interval and previous defrost period. If the previous defrost period is less than 2 minutes for two consecutive defrost cycles the control will lengthen the defrost interval by 15 minutes, up to a maximum of 120 minutes or 30 minutes greater than the original setpoint, whichever comes first. If the previous defrost period is more than 5 minutes for two consecutive defrost cycles the control will shorten the defrost interval by 15 minutes, down to a minimum of 30 minutes or 30 minutes from the original setpoint, whichever is first.

After the defrost condition is satisfied, or after a maximum of 10 minutes in defrost mode, the unit will resume normal heating operation.

ELECTRIC RESISTANCE HEATING

If accessory electric heaters are installed, on a call for "Emergency Heat" the thermostat energizes W which energizes the heater relay and in turn energizes the electric heaters. The IFM is energized which starts the indoor-fan motor. If the heaters are staged, W2 is energized when the second stage of heating is required. When the need for heating is satisfied, the heater and IFM are de-energized.

CONNECTION WIRING DIAGRAM
DANGER: ELECTRICAL SHOCK HAZARD DISCONNECT POWER BEFORE SERVICING

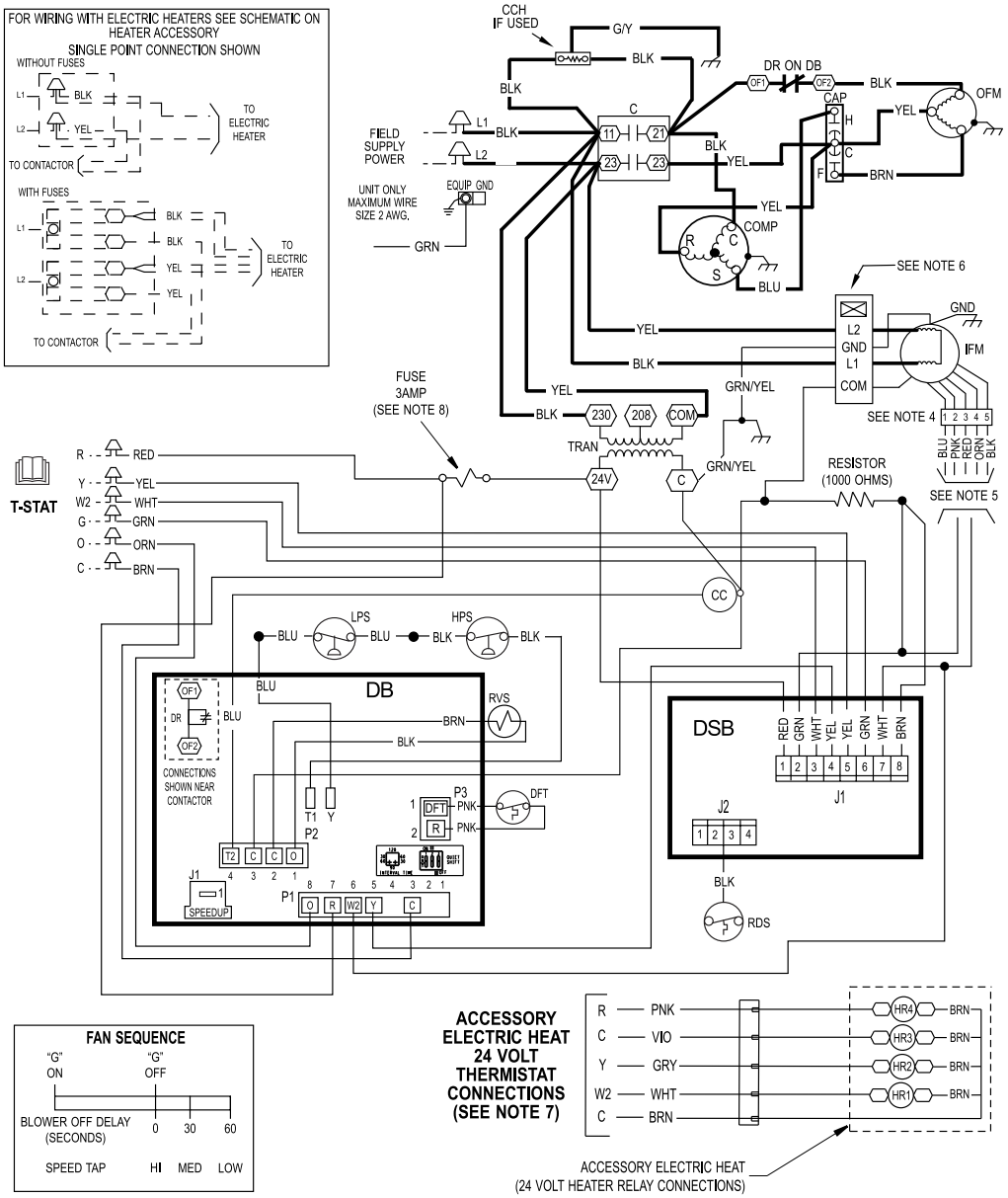

A250302

Fig. 15 – Connection Electrical Diagram

NOTES:

1. IF ANY OF THE ORIGINAL WIRES FURNISHED ARE REPLACED, IT MUST BE REPLACED WITH THE SAME TYPE OF WIRE OR IT'S EQUIVALENT.
2. SEE PRICE PAGES FOR THERMOSTAT.
3. USE CONDUCTORS SUITABLE FOR AT LEAST 75˚C (167˚F) FOR FIELD INSTALLATION.
4. FACTORY WIRING FOR SPEED SELECTOR PLUG
5. CONSULT INSTALLATION INSTRUCTIONS FOR FACTORY SPEED TAP SETTINGS. CHANGING OF SPEED TAPS MAY BE REQUIRED WHEN USING FIELD INSTALLED ELECTRIC HEATERS, SEE INSTALLATION INSTRUCTIONS
6. "DO NOT DISCONNECT PLUG UNDER LOAD."
7. MULTI-STAGE HEATER SHOWN. SINGLE STAGE HEATERS HAVE WHITE AND BROWN WIRES ONLY.
8. FUSE MANUFACTURED BY LITTLELFUSE, P/N 257003.
9. N.E.C. CLASS 2 24 V.

LADDER WIRING DIAGRAM
DANGER: ELECTRICAL SHOCK HAZARD DISCONNECT POWER BEFORE SERVICING

LEGEND

△	FIELD SPLICE	——	FACTORY WIRING	▬▬	FACTORY HI VOLTAGE	CCH	CRANKCASE HEATER
⬭	TERMINAL (MARKED)	– –	FIELD CONTROL WIRING	C	CONTACTOR	COMP	COMPRESSOR MOTOR
○	TERMINAL (UNMARKED)	—–	FIELD POWER WIRING	CAP	CAPACITOR	DSB	DISSIPATION BOARD
●	SPLICE	– – –	ACCESSORY OR OPTIONAL WIRING	CC	CONTACTOR COIL	DB	DEFROST BOARD
DFT	DEFROST THERMOSTAT	HR	HEATER RELAY	P	PLUG		
DR	DEFROST RELAY	IFM	INDOOR FAN MOTOR	RVS	REVERSING VALVE SOLENOID		
GND	GROUND	LPS	LOW PRESSURE SWITCH	TRAN	TRANSFORMER		
HPS	HIGH PRESSURE SWITCH	OFM	OUTDOOR FAN MOTOR	T-STAT	THERMOSTAT		

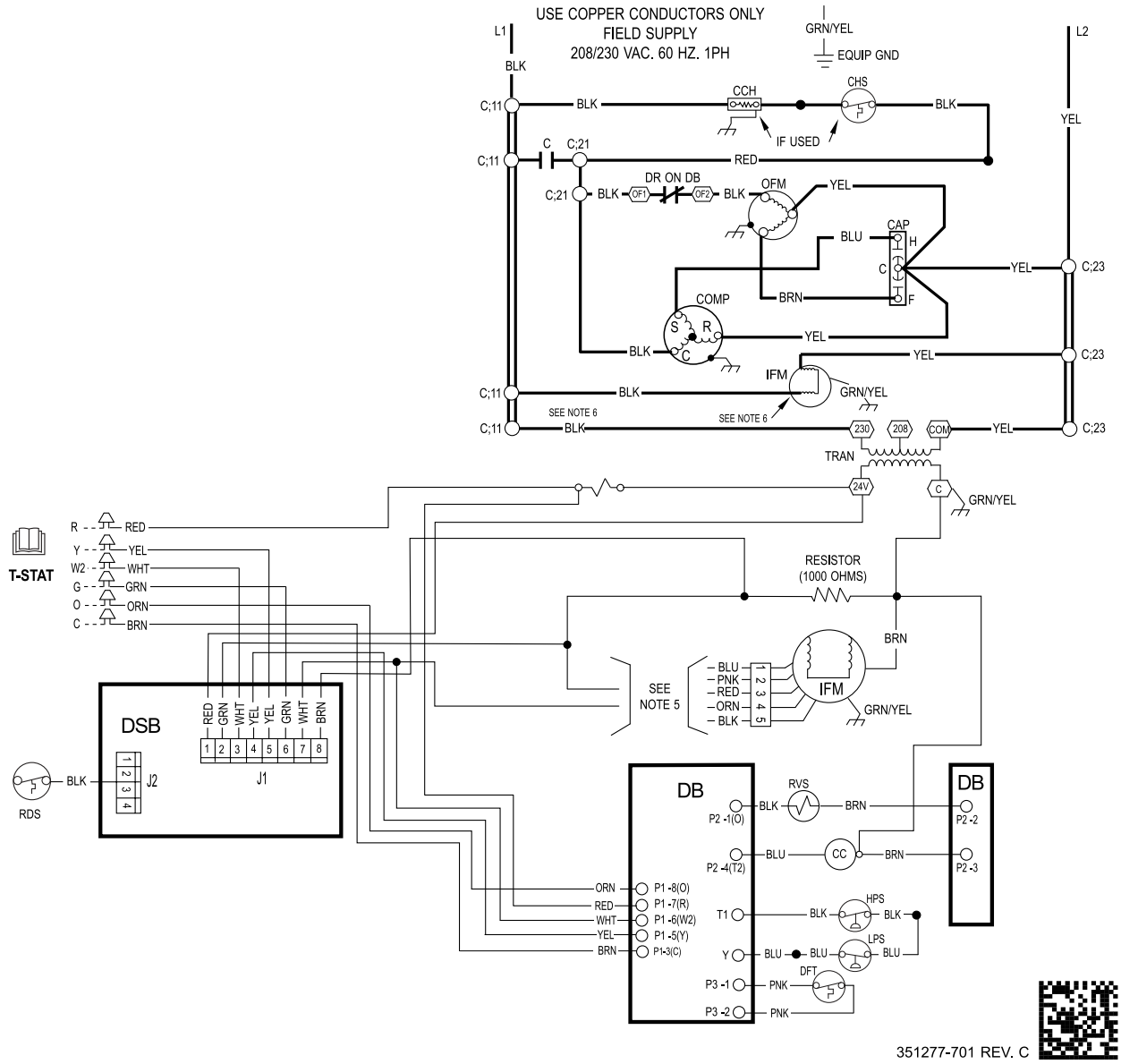

Fig. 16 – Ladder Electrical Diagram

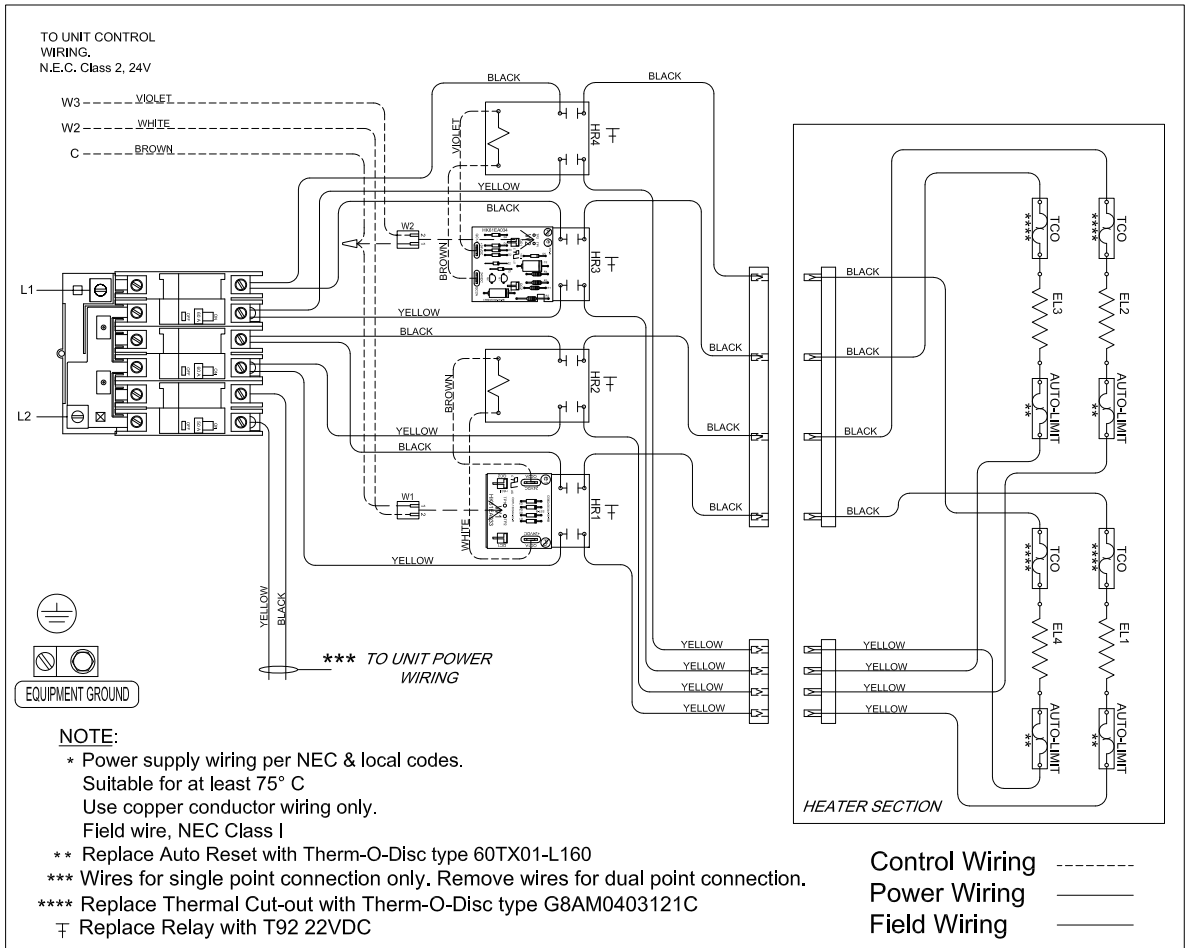

KILOWATTS	VOLTS	PHASE	HERTZ	CONTROL VOLTS	STEPS	HEATER AMPS	CIRCUIT BREAKER		
							C.B. # 1	C.B. # 2	C.B. # 3
15.0/20.0	208/240	1	60	24 AC	2	72.1/83.3	50A	60A	60A
CPHEATER132A03 (110070158)									

A190339

Fig. 17 – Accessory Electric Heater Wiring

Table 7 – Wet Coil Air Delivery*

UNIT SIZE	SPEED TAP	TAP COLOR	AIR DELIVERY†	EXTERNAL STATIC PRESSURE (in. W.C.)									
				0.1	0.2	0.3	0.4	0.5	0.6	0.7	0.8	0.9	1
24	1	BLU	SCFM	905	695	635	580	515	445	385	345	310	275
	2	PNK	SCFM	920	830	770	740	690	640	565	505	455	400
	3	RED‡	SCFM	1015	990	935	890	845	800	760	720	665	635
	4	ORN	SCFM	1060	1030	975	930	890	845	805	760	705	670
	5	BLK	SCFM	1165	1130	1085	1045	1005	965	925	890	850	810
30	1	BLU	SCFM	995	875	935	775	690	945	575	520	480	385
	2	PNK	SCFM	1055	1005	960	915	855	775	735	685	655	610
	3	RED‡	SCFM	1210	1175	1135	1085	1045	1005	925	880	840	780
	4	ORN	SCFM	1225	1180	1135	1095	1055	1010	955	880	845	815
	5	BLK	SCFM	1355	1335	1295	1255	1215	1180	1140	1100	1045	990
36	1	BLU	SCFM	1195	1165	1120	1075	1020	975	930	865	820	765
	2	PNK	SCFM	1250	1210	1165	1115	1070	1025	950	910	870	820
	3	RED‡	SCFM	1410	1370	1330	1290	1245	1205	1165	1120	1080	1020
	4	ORN	SCFM	1430	1380	1340	1295	1255	1220	1175	1135	1080	1000
	5	BLK	SCFM	1535	1495	1455	1415	1375	1335	1300	1260	1220	1155
42	1	BLU	SCFM	1400	1360	1305	1250	1200	1140	1085	1035	985	885
	2	PNK	SCFM	1455	1415	1365	1315	1260	1200	1155	1115	1070	1020
	3	RED	SCFM	1480	1425	1370	1320	1265	1215	1160	1105	1055	1030
	4	ORN‡	SCFM	1535	1505	1460	1410	1360	1305	1255	1210	1175	1130
	5	BLK	SCFM	1645	1600	1555	1500	1455	1410	1365	1315	1255	1215
48	1	BLU	SCFM	1580	1545	1515	1480	1440	1400	1360	1345	1285	1250
	2	PNK	SCFM	1645	1610	1570	1535	1500	1460	1420	1380	1345	1315
	3	RED‡	SCFM	1750	1725	1690	1655	1620	1585	1550	1510	1475	1440
	4	ORN	SCFM	1780	1755	1720	1690	1655	1625	1590	1555	1515	1480
	5	BLK	SCFM	1905	1875	1845	1815	1780	1755	1720	1685	1655	1625
60	1	BLU	SCFM	1705	1675	1635	1600	1555	1515	1470	1420	1370	1320
	2	PNK	SCFM	1755	1720	1685	1645	1605	1565	1525	1475	1430	1380
	3	RED‡	SCFM	1880	1850	1815	1775	1745	1705	1665	1625	1590	1545
	4	ORN	SCFM	1900	1875	1840	1800	1765	1730	1695	1655	1620	1575
	5	BLK	SCFM	2010	1985	1950	1915	1885	1850	1815	1780	1745	1705

* Air delivery values are based on operating voltage of 230v, wet coil, without filter or electric heater. Deduct filter and electric heater pressure drops to obtain static pressure available for ducting.
† Standard Cubic Feet per Minute.
‡ Factory-shipped cooling speed.
NOTES:
1. Do not operate the unit at a cooling airflow that is less than 350 CFM for each 12,000 Btuh of rated cooling capacity. Evaporator coil frosting may occur at airflows below this point

Table 8 – Filter Pressure Drop (IN. W.C.)

FILTER SIZE in. (mm)	CFM																	
	500	600	700	800	900	1000	1100	1200	1300	1400	1500	1600	1700	1800	1900	2000	2100	2200
20X20X1 (508X508X25)	0.05	0.07	0.08	0.10	0.12	0.13	0.14	0.15	—	—	—	—	—	—	—	—	—	—
20X24X1 (508X610x25)	—	—	—	0.08	0.09	0.10	0.11	0.13	0.14	0.15	0.16	—	—	—	—	—	—	—
24X30X1 (610X762x25)	—	—	—	0.04	0.05	0.06	0.07	0.07	0.08	0.09	0.10	—	—	—	—	—	—	—
24X36X1 (610X914X25)	—	—	—	—	—	—	—	0.06	0.07	0.07	0.08	0.09	0.09	0.10	0.11	0.12	0.13	0.14

Table 9 – Accessory Electric Heat Pressure Drop (IN. W.C.)

HEATER kW	CFM							
	800	1000	1200	1400	1600	1800	2000	2200
5-20	0.033	0.037	0.042	0.047	0.052	0.060	0.067	0.075

Maintenance

To ensure continuing high performance, and to minimize the possibility of premature equipment failure, periodic maintenance must be performed on this equipment. This cooling unit should be inspected at least once each year by a qualified service person. To troubleshoot unit, refer to Table 11, Troubleshooting Chart.

NOTE TO EQUIPMENT OWNER: Consult your local dealer about the availability of a maintenance contract.

WARNING

PERSONAL INJURY AND UNIT DAMAGE HAZARD

Failure to follow this warning could result in personal injury or death and possible unit component damage.

The ability to properly perform maintenance on this equipment requires certain expertise, mechanical skills, tools and equipment. If you do not possess these, do not attempt to perform any maintenance on this equipment, other than those procedures recommended in the Owner's Manual.

WARNING

ELECTRICAL SHOCK HAZARD

Failure to follow this warning could result in personal injury or death.

1. Turn off electrical power to the unit and install lockout tag before performing any maintenance or service on this unit.
2. Use extreme caution when removing panels and parts.
3. Never place anything combustible either on or in contact with the unit.

WARNING

UNIT OPERATION HAZARD

Failure to follow this caution may result in equipment damage or improper operation.

Errors made when reconnecting wires may cause improper and dangerous operation. Label all wires prior to disconnecting when servicing.

The minimum maintenance requirements for this equipment are as follows:

1. Inspect air filter(s) each month. Clean or replace when necessary.
2. Inspect indoor coil, drain pan, and condensate drain each cooling season for cleanliness. Clean when necessary.
3. Inspect blower motor and wheel for cleanliness each cooling season. Clean when necessary.
4. Check electrical connections for tightness and controls for proper operation each cooling season. Service when necessary.
5. Ensure electric wires are not in contact with refrigerant tubing or sharp metal edges.

Air Filter

IMPORTANT: Never operate the unit without a suitable air filter in the return-air duct system. Always replace the filter with the same dimensional size and type as originally installed. See Table 1 for recommended filter sizes.

Inspect air filter(s) at least once each month and replace (throwaway-type) or clean (cleanable-type) at least twice during each cooling season and twice during the heating season if electric heat is installed, or whenever the filter becomes clogged with dust and lint.

Unit Top Removal

NOTE: When performing maintenance or service procedures that require removal of the unit top, be sure to perform all of the routine maintenance procedures that require top removal, including coil inspection and cleaning, and condensate drain pan inspection and cleaning.

WARNING

ELECTRICAL SHOCK HAZARD

Failure to follow this warning could result in personal injury or death.

Disconnect electrical power, and install lockout tag to the unit before removing top.

Only qualified service personnel should perform maintenance and service procedures that require unit top removal.

Refer to the following top removal procedures:

1. Unplug all three wires from the outdoor fan motor.
2. Remove screws on unit top cover flange. (Save all screws.)
3. Lift top from unit carefully. Set top on edge and make sure that top is supported by unit side that is opposite duct (or plenum) side.
4. Carefully replace and secure unit top to unit, using screws removed in Steps 1 and 2, when maintenance and/or service procedures are completed.

Indoor Blower and Motor

NOTE: All motors are pre-lubricated. Do not attempt to lubricate these motors.

For longer life, operating economy, and continuing efficiency, clean accumulated dirt and grease from the blower wheel and motor annually.

WARNING

ELECTRICAL SHOCK HAZARD

Failure to follow this warning could result in personal injury or death.

Disconnect electrical power, and install lockout tag to the unit before cleaning and lubricating the blower motor and wheel.

To clean the blower wheel:

1. Remove the blower housing:
   a. Remove the screws on the external side of the duct panel that fasten the housing to the duct panel assembly.
   b. Remove the side access panel and unscrew the mounting bracket that fastens the blower housing to the internal partition panel of the control box assembly.
   c. Make sure that the blower housing is supported by hand before completely removing the mounting bracket.
   d. Slide the blower housing from the rails of the duct panel and place it outside the unit.
2. Remove the blower wheel from the housing:
   a. Loosen the set screw which secures the wheel to the motor shaft.
   b. Loosen the three mounting legs of the motor by removing the bolts that fasten the mounting legs to the housing.
   c. Slide out the motor assembly (motor, belly band and the 3 mounting legs) from the hub of the wheel.

d. Remove the filler panel at the discharge end of the blower housing by removing the two screws that fasten it to the housing.
e. Ensure proper reassembly by marking wheel orientation. Remove the wheel from the housing.

3. Remove the caked on dirt from the wheel and the motor using a brush.
4. Remove lint and dirt accumulations from the wheel and housing with a vacuum cleaner, using a soft brush attachment.
5. Remove grease and oil with a mild solvent.
6. Reassemble
   a. Slip the wheel back in the housing with the hub set screw parented in the correct direction.
   b. Install the filler panel.
   c. Reinsert the motor assembly in the wheel hub and align the mounting legs with the housing mounting hold locations.
   d. Tighten the mounting bolts to fasten the motor assembly with the housing.
   e. Center the wheel in the housing by sliding it, align the flat end of the shaft with the set screw and tighten the set screw.
   f. Slide back the blower housing into the mounting rails in the duct panel and install the mounting bracket back in its position.
   g. Install the screws on the external side of the duct panel to fasten duct panel with the housing.
   h. Replace the side access panel.

Outdoor Coil, Indoor Coil, and Condensate Drain Pan

Inspect the condenser coil, evaporator coil, and condensate drain pan at least once each year.

The coils are easily cleaned when dry; therefore, inspect and clean the coils either before or after each cooling season. Remove all obstructions, including weeds and shrubs, that interfere with the airflow through the condenser coil.

Straighten bent fins with a fin comb. If coated with dirt or lint, clean the coils with a vacuum cleaner, using the soft brush attachment. Be careful not to bend the fins. If coated with oil or grease, clean the coils with a mild detergent and water solution. Rinse coils with clear water, using a garden hose. Be careful not to splash water on motors, insulation, wiring, or air filter(s). For best results, spray condenser coil fins from inside to outside the unit. On units with an outer and inner condenser coil, be sure to clean between the coils. Be sure to flush all dirt and debris from the unit base.

Inspect the drain pan and condensate drain line when inspecting the coils. Clean the drain pan and condensate drain by removing all foreign matter from the pan. Flush the pan and drain trough with clear water. Do not splash water on the insulation, motor, wiring, or air filter(s). If the drain trough is restricted, clear it with a “plumbers snake” or similar probe device.

Outdoor Fan Adjustment

⚠ CAUTION

UNIT OPERATION HAZARD

Failure to follow this caution may result in damage to unit components.

Keep the condenser fan free from all obstructions to ensure proper cooling operation. Never place articles on top of unit.

1. Shut off unit power supply and install lockout tag.
2. Remove outdoor-fan assembly (grille, motor, motor cover, and fan) by removing screws and flipping assembly onto unit top cover.
3. Inspect the fan blades for cracks or bends.
4. If fan needs to be removed, loosen the setscrew and slide the fan off the motor shaft.
5. When replacing fan blade, position blade as shown in Fig. 18. Tighten setscrews.

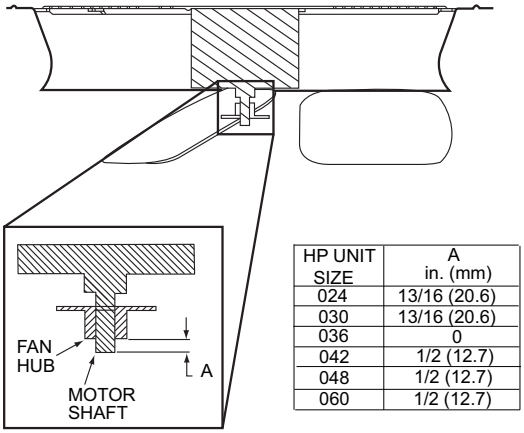

HP UNIT SIZE	A in. (mm)
024	13/16 (20.6)
030	13/16 (20.6)
036	0
042	1/2 (12.7)
048	1/2 (12.7)
060	1/2 (12.7)

Fig. 18 – Outdoor Fan Adjustment

Electrical Controls and Wiring

Inspect and check the electrical controls and wiring annually. Be sure to turn off the electrical power to the unit.

Verify continuity of earth grounding. Check that wiring will not be subject to wear, corrosion, excessive pressure, vibration, sharp edges, or any other adverse environmental effects. The check shall take into account the effects of aging or continual vibration from sources such as compressors or fans.

Remove access panel to locate all the electrical controls and wiring. Check all electrical connections for tightness. Tighten all screw connections. If any smoky or burned connections are noticed, disassemble the connection, clean all the parts, re-strip the wire end and reassemble the connection properly and securely.

Check to ensure no wires are touching refrigerant tubing or sharp sheet metal edges. Move and secure wires to isolate from tubing and sheet metal edges.

Before doing anything on electrical components, make sure that all capacitors are properly discharged to avoid possibility of sparking. Replace components only with parts specified by the manufacturer. Other parts may result in the ignition of refrigerant in the atmosphere from a leak.

After inspecting the electrical controls and wiring, replace all the panels. Start the unit, and observe at least one complete cooling cycle to ensure proper operation. If discrepancies are observed in operating cycle, or if a suspected malfunction has occurred, check each electrical component with the proper electrical instrumentation. Refer to the unit wiring label when making these checks. (See Fig. 15 and Fig. 16)

Refrigerant Circuit

Inspect all refrigerant tubing connections and the unit base for oil accumulation annually. Detecting oil generally indicates a refrigerant leak.

⚠ WARNING

EXPLOSION, SAFETY AND ENVIRONMENTAL HAZARD

Failure to follow this warning could result in personal injury, death or equipment damage.

This system uses Puron Advance (R-454B) refrigerant which has higher operating pressures than R-22 and other refrigerant. No other refrigerant may be used in this system. Gauge set, hoses, and recovery system must be designed to handle Puron Advance (R-454B). If you are unsure, consult the equipment manufacturer.

If oil is detected or if low cooling performance is suspected, leak test all refrigerant tubing using an electronic leak detector, calibrated for use with R-454B or liquid-soap solution. Ensure that the detector is not a potential ignition source. A halide torch (or any other detector using a naked flame) must not be used. If a refrigerant leak is detected, refer to Check for Refrigerant Leaks section.

If no refrigerant leaks are found and low cooling performance is suspected, refer to Checking and Adjusting Refrigerant Charge section.

Indoor Airflow

The airflow does not require checking unless improper performance is suspected. If a problem exists, be sure that all supply- and return-air grilles are open and free from obstructions, and that the air filter is clean.

Metering Devices

Refrigerant cooling metering device is a piston located upstream of the indoor coil distributor assembly. Refrigerant heating mode metering device is a piston located upstream of the outdoor coil distributor assembly.

High Flow Valves

High flow valves are located on the compressor hot gas and suction tubes. Large black plastic caps distinguish these valves with O-rings located inside the caps. Ensure the plastic caps are in place and tight or the possibility of refrigerant leakage could occur. To replace valve core body without removing charge, service tool p/n SCFT20A is required.

High Pressure Switch

The high-pressure switch is located in the discharge line and protects against excessive condenser coil pressure. It opens at 650 psig (4482 kPA). High pressure may be caused by a dirty condenser coil, failed fan motor, or condenser air recirculation.

To check switch:

1. Turn off all power to unit.
2. Disconnect leads on switch.
3. Apply ohmmeter leads across switch. You should have continuity on a good switch.

Loss of Charge Switch

The loss of charge switch is located in the liquid line and will protect the compressor against a loss of charge condition. It opens at 20 psig (138 kPa). If switch is open check system pressures. If pressures are normal, check continuity and wiring of switch. Repair or replace as required.

Puron Advance (R-454B) Compressor

The compressor used in this product is specifically designed to operate with Puron Advance (R-454B) refrigerant and cannot be interchanged.

The compressor is an electrical (as well as mechanical) device. Exercise extreme caution when working near compressors. Power should be shut off, if possible, for most troubleshooting techniques. Refrigerants present additional safety hazards.

⚠ WARNING

EXPLOSION HAZARD

Failure to follow this warning could result in personal injury or death and/or property damage.

Wear safety glasses and gloves when handling refrigerants. Keep torches and other ignition sources away from refrigerants and oils.

Compressors vary in type by unit size. See Table 10 below for compressor type by size.

Table 10 – Compressor Type

UNIT	COMPRESSOR TYPE	MANUFACTURER SUGGESTED OIL TYPE
024	LG Scroll	3MAF Polyolester Oil (POE)
030	LG Scroll	3MAF Polyolester Oil (POE)
036	LG Scroll	3MAF Polyolester Oil (POE)
042	LG Scroll	3MAF Polyolester Oil (POE)
048	LG Scroll	3MAF Polyolester Oil (POE)
060	LG Scroll	3MAF Polyolester Oil (POE)

All compressors in these units have internal overload protection. This protection will interrupt motor current under fault conditions such as running current overload. The Copeland Scroll compressors also have internal pressure relief that will relieve from the high side to the low side if the differential is between 550 and 625 psig.

Refrigerant

⚠ CAUTION

EXPLOSION, ENVIRONMENTAL SAFETY HAZARD

Failure to follow this warning could result in personal injury, death or equipment damage.

This system uses Puron Advance (R-454B) refrigerant which has higher operating pressures than R-22 and other refrigerants. No other refrigerant may be used in this system. Gauge set, hoses, and recovery system must be designed to handle Puron Advance (R-454B). If you are unsure, consult the equipment manufacturer.

This system uses Puron Advance (R-454B) refrigerant which has higher operating pressures than R-22 and other refrigerants. No other refrigerant may be used in this system. Gauge set, hoses, and recovery system must be designed to handle Puron Advance (R-454B). If you are unsure, consult the equipment manufacturer. Failure to use Puron Advance (R-454B) compatible servicing equipment or replacement components may result in property damage or injury.

Compressor Oil

Use only manufacturer suggested compressor oil, see Table 10 for correct oil.

NOTE: This oil is extremely hygroscopic, meaning it absorbs water readily. POE/PVE oils can absorb 15 times as much water as other oils designed for HCFC and CFC refrigerants. Take all necessary precautions to avoid exposure of the oil to the atmosphere.

Servicing Systems on Roofs with Synthetic Materials

POE/PVE (polyolester) compressor lubricants are known to cause long term damage to some synthetic roofing materials. Exposure, even if immediately cleaned up, may cause embrittlement (leading to cracking) to occur in one year or more. When performing any service that may risk exposure of compressor oil to the roof, take appropriate precautions to protect roofing. Procedures which risk oil leakage include, but are not limited to, compressor replacement, repairing refrigerant leaks, replacing refrigerant components such as filter drier, pressure switch, metering device, coil, accumulator, or reversing valve.

Synthetic Roof Precautionary Procedure

1. Cover extended roof working area with an impermeable polyethylene (plastic) drip cloth or tarp. Cover an approximate 10 x 10 ft (3 x 3 m) area.
2. Cover area in front of the unit service panel with a terry cloth shop towel to absorb lubricant spills, prevent run-offs, and protect drop cloth from tears caused by tools or components.
3. Place terry cloth shop towel inside unit immediately under component(s) to be serviced and prevent lubricant run-offs through the louvered openings in the unit base.

4. Perform required service.
5. Remove and dispose of any oil contaminated material per local codes.

Liquid Line Filter Drier

The filter drier is specifically designed to operate with Puron Advance (R-454B). Use only factory-authorized components. Filter drier must be replaced whenever the refrigerant system is opened. When removing a filter drier, use a tubing cutter to cut the drier from the system. Do not unsweat a filter drier from the system. Heat from unsweating will release moisture and contaminants from drier into system.

Puron Advance (R-454B) Refrigerant Charging

Refer to unit information plate and charging chart. Some Puron Advance (R-454B) refrigerant cylinders contain a dip tube to allow liquid refrigerant to flow from cylinder in upright position. For cylinders equipped with a dip tube, charge Puron Advance (R-454B) units with cylinder in upright position and a commercial metering device in manifold hose. Charge refrigerant into suction-line.

Troubleshooting

Refer to the Troubleshooting Chart (Table 11) for troubleshooting information.

Sequence of Events - Dissipation Mode

1. Refrigerant leaks.
2. Sensor detects leak.
3. Dissipation board send system into Dissipation Mode (energizes G; de-energizes Y and W.) Dissipation board displays Flash Code 1 until refrigerant concentration decreases, at which point Flash Code 3 is displayed. (See Table 12)
4. Dissipation Mode continues for at least 10 minutes.
5. 5-minute ON delay for system equipment is enabled.
6. System resumes normal operation.

Start-up Checklist

Use the Start-Up Checklist at the back of this manual.

Table 11 – Troubleshooting Chart

SYMPTOM	CAUSE	REMEDY
Compressor and outdoor fan will not start	Power failure	Call power company
	Fuse blown or circuit breaker tripped	Replace fuse or reset circuit breaker
	Defective contactor, transformer, control relay, or high-pressure, loss-of-charge or low-pressure switch	Replace component
	Insufficient line voltage	Determine cause and correct
	Incorrect or faulty wiring	Check wiring diagram and rewire correctly
	Thermostat setting too low/too high	Reset Thermostat setting
Compressor will not start but condenser fan runs	Faulty wiring or circuit Loose connections in compressor	Check wiring and repair or replace
	Compressor motor burned out, seized, or internal overload open	Determine cause Replace compressor
	Defective run capacitor, overload, or PTC (positive temperature coefficient) thermistor	Determine cause and replace
	Low input voltage	Determine cause and correct
Compressor cycles (other than normally satisfying) cooling/heating calls	Refrigerant overcharge or undercharge	Recover refrigerant, evacuate system, and recharge to capacities shown on rating plate
	Defective compressor	Replace and determine cause
	Insufficient line voltage	Determine cause and correct
	Blocked outdoor coil	Determine cause and correct
	Defective run/start capacitor, overload or start relay	Determine cause and replace
	Faulty outdoor fan motor or capacitor	Replace
	Restriction in refrigerant system	Locate restriction and remove
Compressor operates continuously	Dirty air filter	Replace filter
	Unit undersized for load	Decrease load or increase unit size
	Thermostat temperature set too low	Reset Thermostat setting
	Low refrigerant charge	Locate leak, repair, and recharge
	Air in system	Recover refrigerant, evacuate system, and recharge
	Outdoor coil dirty or restricted	Clean coil or remove restriction
Excessive head pressure	Dirty air filter	Replace filter
	Dirty indoor or outdoor coil	Clean coil
	Refrigerant overcharged	Recover excess refrigerant
	Air in system	Recover refrigerant, evacuate system, and recharge
	Indoor or outdoor air restricted or air short-cycling	Determine cause and correct
Head pressure too low	Low refrigerant charge	Check for leaks, repair and recharge
	Restriction in liquid tube	Remove restriction
Excessive suction pressure	High Heat load	Check for source and eliminate
	Reversing valve hung up or leaking internally	Replace valve
	Refrigerant overcharged	Recover excess refrigerant
Suction pressure too low	Dirty air filter	Replace filter
	Low refrigerant charge	Check for leaks, repair and recharge
	Metering device or low side restricted	Remove source of restriction
	Insufficient coil airflow	Check filter–replace if necessary
	Temperature too low in conditioned area	Reset Thermostat setting
	Outdoor ambient below 55°F (13°C)	Install low-ambient kit
	Filter drier restricted	Replace

Manufacturer reserves the right to change, at any time, specifications and designs without notice and without obligations.

Table 12 – Dissipation Board Status Code Descriptions

STATUS CODE DESCRIPTION FOR DISSIPATION BOARD

FLASH CODE CHART

Yellow LED	Reason	Mode
Solid	Normal Operation	Normal Operation
Flashing 1	Sensor >= 20% LFL	Dissipation
Flashing 2	Sensor Open	Dissipation
Flashing 3	Normal Dissipation After Leak	Dissipation
Flashing 4	No Power to G Output	Dissipation w/o Blower
Flashing 5	Fault with A2L Digital Sensor	Dissipation
Flashing 6	Test Button Stuck (>30s)	Dissipation
Flashing 7	Y or W Wiring Inverted	Normal Operation
Flashing 8	Y or W Shorted	Normal Operation

PIN	COLOR	1-Stage Unit	2-Stage Unit
1	Red	to unit 24VAC	to unit 24VAC
2	Green	to SPP unit G	to SPP unit G
3	White	to TSTAT W	to TSTAT W1
4	Yellow	to SPP unit Y	to SPP unit Y1
5	Yellow	to TSTAT Y	to TSTAT Y1
6	Green	to TSTAT G	to TSTAT G
7	White	to SPP unit W	to SPP unit W1
8	Brown	to unit COM	to unit COM
See Installation Instructions For Specific Details**			

350502-201 REV. -

A240111

Start-Up Checklist

(Remove and Store in Job Files)

I. PRELIMINARY INFORMATION

MODEL NO.: _____

SERIAL NO.: _____

DATE: _____

TECHNICIAN: _____

II. PRESTART-UP (Insert check mark in box as each item is completed)

( ) VERIFY THAT ALL PACKING MATERIALS HAVE BEEN REMOVED FROM UNIT
( ) REMOVE ALL SHIPPING HOLD DOWN BOLTS AND BRACKETS PER INSTALLATION INSTRUCTIONS
( ) CHECK ALL ELECTRICAL CONNECTIONS AND TERMINALS FOR TIGHTNESS
( ) CHECK THAT INDOOR (EVAPORATOR) AIR FILTER IS CLEAN AND IN PLACE
( ) VERIFY THAT UNIT INSTALLATION IS LEVEL
( ) CHECK FAN WHEEL, AND PROPELLER FOR LOCATION IN HOUSING/ORIFICE AND SETSCREW TIGHTNESS
( ) INSPECT TUBING

III. START-UP

Supply Voltage: L1-L2

Compressor Amps: L1 (C) _____ L2 (S) _____L3(R)_____

Indoor (Evaporator Fan Amps _____Outdoor Fan Amps_____

Temperature-Cooling Mode

Outdoor Air Temperature:_____DB _____ WB

Return-Air Temperature:_____DB _____ WB

Cooling Supply Air _____DB _____ WB

Pressures - Cooling Mode

Refrigerant Suction _____ psig

Suction Line Temp* _____

Refrigerant Discharge _____ psig

Discharge Temp† _____

Temperature-Heating Mode

Outdoor Air Temperature:_____DB _____ WB

Return-Air Temperature:_____DB _____ WB

Supply Air _____DB _____ WB

Pressures - Heating Mode

Refrigerant Suction _____ psig

Suction Line Temp* _____

Refrigerant Discharge _____ psig

Discharge Temp† _____

* Measured at suction inlet to compressor
{Measured at liquid line leaving condenser.

Decommissioning

This unit is designed to provide many years of comfort. Eventually, this unit will need to be replaced.

Work procedure for decommissioning:

1. All maintenance staff and others working in the local area shall be instructed on the nature of work being performed. Any nearby confined space work shall be avoided.
2. If any hot work is to be conducted on the refrigeration system or associated parts, a fire extinguisher shall be available on hand. A dry powder or CO2 fire extinguisher shall be located near the refrigerant charge recovery area.
3. Potential ignition sources, including cigarette smoking, must not be used by the technician and must be kept far away from the unit site.
4. Ensure that electrical power is available to run recovery equipment prior moving to the next step.
5. Using a R-454B leak detector, check around the area of the unit for presence of refrigerant. Note: Leak detector must be non-sparking and adequately sealed.
6. Shut off main gas shut-off valve to appliance.
7. Shut off power to unit and install lockout tag on the electrical whip to the unit.
8. Remove gas line to gas valve and cap.
9. Before beginning recovery of the refrigerant:
   a. Make sure that handling equipment is available, if needed, to handle the refrigerant recovery cylinders.
   b. All personal protective equipment is available, and must be used correctly
   c. Recovery process must be performed by an EPA-certified technician.
   d. All recovery equipment and cylinders must conform to appropriate standards and be suitable for the recovery of FLAMMABLE REFRIGERANTS (R-454B).
10. Recovery process:
   a. Technician must be present during the entire recovery process.
   b. Use a recovery cylinder that is for R-454B and do not mix refrigerants. If possible, use an empty cylinder and cool before use. Cylinders shall be complete with pressure-relief valve and associated shut-off valves in good working order. Make sure the recovery cylinder is situated on the scale prior to recovery.
   c. Note the original charge amount listed on the rating plate. Make sure that there are sufficient recovery cylinders available to recover all the charge.
   d. Before using the recovery machine, check that it is suitable for use with FLAMMABLE REFRIGERANTS (R-454B), is in satisfactory working order, has been properly maintained, and associated electrical components are sealed to prevent ignition in the event of a refrigerant release. If there are any doubts, please contact the recovery machine manufacturer before using.
   e. Connect recovery equipment to gauge ports on unit and to the recovery cylinder.
   f. In accordance with all recovery machine instructions, begin the recovery machine.
   g. Cylinders must not be overfilled (No more than 80% volume liquid charge). Do not exceed the maximum working pressure of the cylinder.
   h. When the cylinders have been filled correctly and the evacuation process is complete, close all cylinder valves are closed off.
   i. Record the amount of R-454B refrigerant recovered and note on the logs of each cylinder used.
   j. Cut out the form below and fill out, sign, and date. Affix the form in a prominent location on the unit using tape.

DECOMMISSIONED
Model Number:
Serial Number:
UNIT EMPTIED OF REFRIGERANT
Date:
Signature:

   k. If refrigerant was not recovered in decommission process. Do not fill out the decommissioned label above. Ensure all A2L labeling is still on unit.
   l. Recovered refrigerant shall not be charged into another REFRIGERATING SYSTEM unless it has been cleaned and checked.
   m. Recovered refrigerant shall be returned to the refrigerant supplier in the correct recovery cylinder, and the relevant waste transfer note arranged. Do not mix refrigerants in recovery systems, and especially not in cylinders.
   n. If compressors or compressor oils are to be removed, ensure that they have been evacuated to 200 microns or less to make certain that R-454B does not remain within the lubricant. The evacuation process shall be carried out prior to returning the compressor to the supplier. The crankcase electric heat may be used to accelerate the compressor evacuation process. A torch must not be used. When oil is drained from a system, it shall be carried out safely.

My Learning Center is your central location for professional residential HVAC training resources that help strengthen careers and businesses. We believe in providing high quality learning experiences both online and in the classroom.

Access My Learning Center with your HVACpartners credentials at www.MLCtraining.com. Please contact us at mylearning@carrier.com with questions.

© 2025 Carrier. All rights reserved.
Edition Date: 12/25

Catalog No: 50NHB-03SI

Replaces: 50NHB-02SI

Manufacturer reserves the right to change, at any time, specifications and designs without notice and without obligations.