59MN7C

Infinity®Modulating, 4-Way Multipoise Variable Speed, Condensing Gas Furnace

Product Data

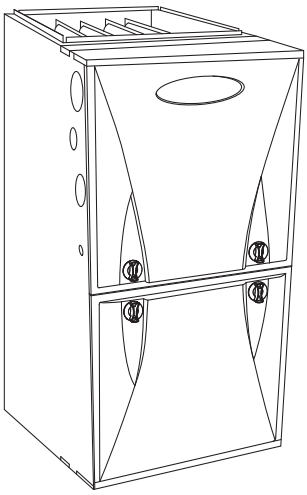

A11263

Representative drawing only. Some product models may vary.

WARNING

CARBON MONOXIDE POISONING AND FIRE HAZARD

Failure to follow this warning could result in personal injury, death, and/or property damage.

This furnace is not designed for use in recreation vehicles, manufactured (mobile) homes or outdoors.

Failure to follow this warning could result in personal injury, death, and/or property damage.

The 59MN7C Multipoise Variable-Capacity Condensing Gas Furnace features the modulating Infinity® System. The innovative modulating gas valve is at the heart of this furnace's quiet operation, along with the constant airflow variable-speed Infinity ECM blower motor and variable-speed inducer motor. This furnace also provides 3.5 times tighter temperature control than single stage furnaces. With an Annual Fuel Utilization Efficiency (AFUE) up to 98.5%, this Infinity gas furnace provides exceptional savings over standard furnaces as well. This Infinity Gas Furnace also features 4-way multipoise installation flexibility. The 59MN7C can be vented as a direct vent/two-pipe furnace or as an optional ventilated combustion air application. A Carrier Infinity® Control and an Infinity® Air Conditioner or Heat Pump can be used to form a complete Infinity System. Low NOx units are designed for California installations and meet 40 ng/J NOx emissions. Can be installed in air quality management districts with a 40 ng/J NOx emissions requirement. All sizes are design certified in Canada. This furnace is not designed for use in recreation vehicles, manufactured (mobile) homes or outdoors.

STANDARD FEATURES

- Our quietest furnace. Compare for yourself at HVACpartners.com.
- All sizes meet ENERGY STAR® Version 4.0 criteria for gas furnaces: 95%+AFUE
- Supports single- and multiple-zone Infinity® systems.
- Ideal height 35" (889 mm) cabinet: short enough for taller coils, but still allows enough room for service.
- Infinity® Features - match with the Infinity® Control for Infinity® System benefits
- Integral part of the Ideal Humidity System™ Technology.
- Silicon Nitride Power Heat™ Hot Surface Igniter.
- SmartEvap™ technology helps control humidity levels in the home when used with a compatible humidity control system.
- ComfortFan™ technology allows control of continuous fan speed from a compatible thermostat.
- On-board NFC antenna makes setup a tap away when using the Carrier Service Technician App.
- 3 Digit Display shows fault codes and furnace status.
- RAT and SAT thermistors can provide temperature rise.
- 4-way multipoise design for upflow, downflow or horizontal installations, with unique vent elbow and optional through-the-cabinet downflow venting capability.
- Constant airflow variable-speed blower and inducer motors, modulating gas valve.
- Adjustable blower speed for cooling, continuous fan, and dehumidification.
- Aluminized-steel primary heat exchanger.
- Stainless-steel condensing secondary heat exchanger.
- Convertible to propane with gas conversion accessory list.
- Factory-configured ready for upflow applications.
- Fully-insulated casing including blower section.
- Convenient Air Purifier and Humidifier connections.
- Direct-vent/sealed combustion or ventilated combustion air venting.
- Installation flexibility: sidewall or vertical vent.
- Residential installations may be eligible for consumer financing through the Retail Credit Program.
- Cabinet air leakage less than 2.0% at 1.0 in. w.c. and cabinet air leakage less than 1.4% at 0.5 in. w.c. when tested in accordance with ASHRAE standard 193.

Use of the AHRI Certified TM Mark indicates a manufacturer's participation in the program. For verification of certification for individual products, go to www.ahridirectory.org .

A200374

DIMENSIONAL DRAWING

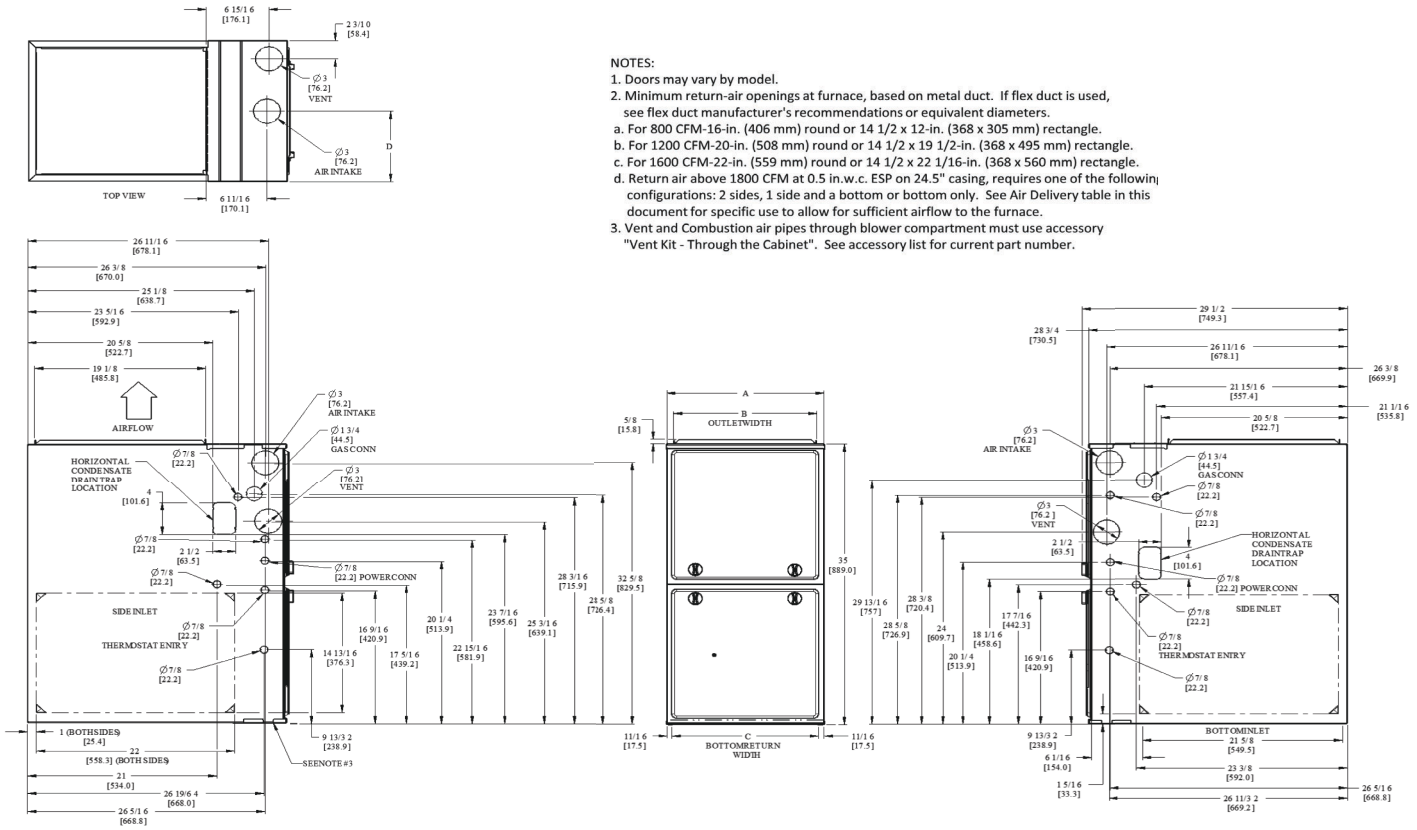

NOTES:
1. Doors may vary by model.
2. Minimum return-air openings at furnace, based on metal duct. If flex duct is used, see flex duct manufacturer's recommendations or equivalent diameters.
a. For 800 CFM-16-in. (406 mm) round or 14 1/2 x 12-in. (368 x 305 mm) rectangle.
b. For 1200 CFM-20-in. (508 mm) round or 14 1/2 x 19 1/2-in. (368 x 495 mm) rectangle.
c. For 1600 CFM-22-in. (559 mm) round or 14 1/2 x 22 1/16-in. (368 x 560 mm) rectangle.
d. Return air above 1800 CFM at 0.5 in.w.c. ESP on 24.5" casing, requires one of the following configurations: 2 sides, 1 side and a bottom or bottom only. See Air Delivery table in this document for specific use to allow for sufficient airflow to the furnace.
3. Vent and Combustion air pipes through blower compartment must use accessory "Vent Kit - Through the Cabinet". See accessory list for current part number.

NOTE: ALL DIMENSIONS IN INCH (MM) SD5603-4 REV.-

A210796

Dimensions

FURNACE SIZE	A	B	C	D	SHIP WT. LB (KG)
	CABINET WIDTH	OUTLET WIDTH	BOTTOM INLET WIDTH	AIR INTAKE	
060C17--14	17-1/2 (445)	15-7/8 (403)	16 (406)	8-3/4 (222)	144 (65.3)
060C21--20	21 (533)	19-3/8 (492)	19-1/2 (495)	10-1/2 (267)	160 (72.3)
080C17--14	17-1/2 (445)	15-7/8 (403)	16 (406)	8-3/4 (222)	150 (67.8)
080C21--20	21 (533)	19-3/8 (492)	19-1/2 (495)	10-1/2 (267)	161 (72.8)
100C21--22	21 (533)	19-3/8 (492)	19-1/2 (495)	10-1/2 (267)	166 (75.1)
120C24--22	24-1/2 (622)	22-7/8 (581)	23 (584)	12-1/4 (311)	184 (83.5)

Manufacturer reserves the right to change, at any time, specifications and designs without notice and without obligations.

MODEL NUMBER NOMENCLATURE

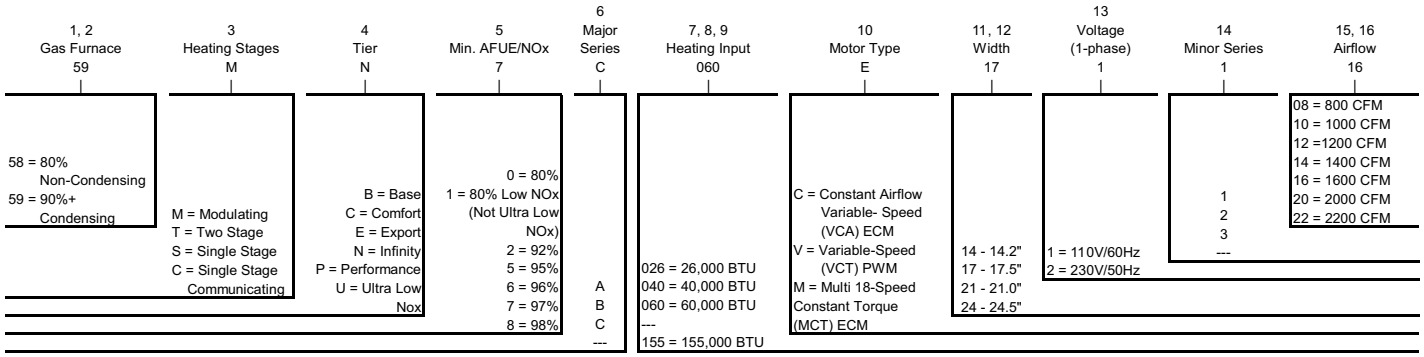

A230439

For California Residents:

For installation in SCAQMD only: This furnace does not meet the SCAQMD Rule 1111 14 ng/J NOx emission limit, and thus is subject to a mitigation fee of up to $450. This furnace is not eligible for the Clean Air Furnace Rebate Program: www.CleanAirFurnaceRebate.com

FURNACE COMPONENTS

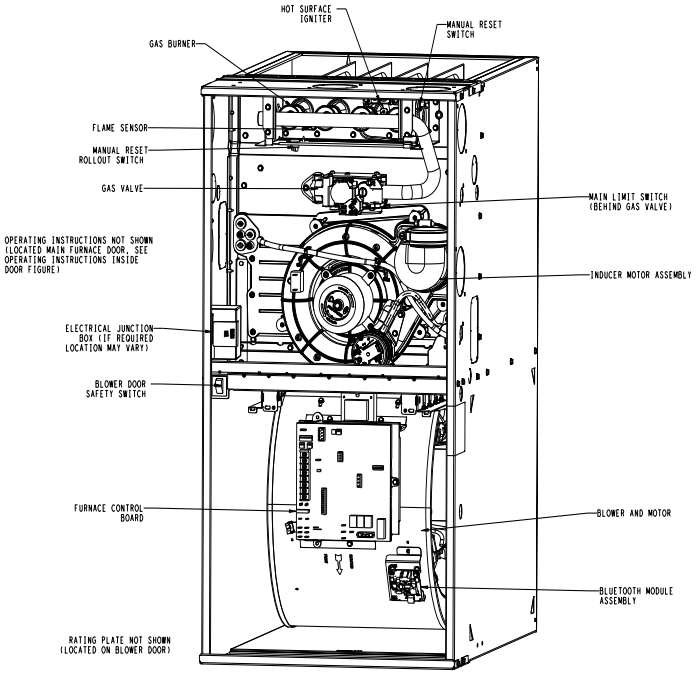

A230442

MINIMUM CLEARANCES TO COMBUSTIBLE MATERIALS

POSITION	CLEARANCE
Rear	0 (0 mm)
Front (Combustion air openings in furnace and in structure)	1 in. (25 mm)
Required for service*	24 in. (610 mm)†
All Sides of Supply Plenum*	1 in. (25 mm)
Sides	0 (0 mm)
Vent	0 (0 mm)
Top of Furnace	1 in. (25 mm)

*. Consult your local building codes
†. Recommended

The furnace should be sized to provide 100 percent of the design heating load requirement plus any margin that occurs because of furnace model size capacity increments. None of the furnace model sizes can be used if the heating load is 20,000 BTU or lower. Use Air Conditioning Contractors of America (Manual J and S); American Society of Heating, Refrigerating, and Air-Conditioning Engineers; or other approved engineering method to calculate heating load estimates and select the furnace. Excessive oversizing of the furnace may cause the furnace and/or vent to fail prematurely, customer discomfort and/or vent freezing.

Failure to follow these guidelines is considered faulty installation and/or misapplication of the furnace; and resulting failure, damage, or repairs may impact warranty coverage.

SPECIFICATIONS

UNIT SIZE			060C17--14	060C21--20	080C17--14	080C21--20	100C21--22	120C24--22
HEATING AND CAPACITY AND EFFICIENCY								
Input BTUh*	Maximum Heat	(BTUH)	60,000	60,600	80,000	80,000	100,000	120,000
	Intermediate Heat	(BTUH)	39,000	39,000	52,000	52,000	65,000	78,000
	Minimum Heat	(BTUH)	24,000	24,000	32,000	32,000	40,000	48,000
Output Capacity (BTUh)† Upflow / Horizontal	High	(BTUH)	59,000	60,000	78,000	78,000	98,000	117,000
	Low	(BTUH)	24,000	24,000	31,000	31,000	39,000	47,000
Output Capacity (BTUh)‡ Downflow	High	(BTUH)	58,000	59,000	77,000	77,000	96,000	115,000
	Low	(BTUH)	23,000	23,000	31,000	31,000	39,000	46,000
Certified Temperature Rise Range - °F (°C)		Maximum Heat	35 - 65 (19 - 36)	35 - 65 (19 - 36)	40 - 70 (22 - 39)	40 - 70 (22 - 39)	45 - 75 (25 - 42)	45 - 75 (25 - 42)
		Intermediate Heat	50 - 80 (28 - 44)	40 - 70 (22 - 39)	50 - 80 (28 - 44)	50 - 80 (28 - 44)	50 - 80 (28 - 44)	50 - 80 (28 - 44)
		Minimum Heat	35 - 65 (19 - 36)	25 - 55 (14 - 31)	35 - 65 (19 - 36)	35 - 65 (19 - 36)	35 - 65 (19 - 36)	35 - 65 (19 - 36)
AFUE		Upflow/Horizontal	97.4	98.5	97.4	97.2	97.3	97.2
		Downflow	95	96.7	95	95	95	95
AIRFLOW CAPACITY AND BLOWER DATA								
Rated Certified External Static Pressure		Heating	0.12	0.12	0.15	0.15	0.2	0.2
		Cooling	0.5	0.5	0.5	0.5	0.5	0.5
Airflow CFM @ Rated ESP (CFM)**		Maximum Heat	1045	1020	1220	1285	1445	1735
		Intermediate Heat	470	600	620	660	825	970
		Minimum Heat	350	475	510	535	645	785
		Cooling	1275	1920	1530	2035	2165	2170
Cooling Capacity (tons)		400 CFM/ton	3	4.5	3.5	4.5	5.5	5.5
		350 CFM/ton	3.5	5.5	4	5.5	6	6
Direct Drive Motor Type			Electronically Commutated Motor (ECM)					
Direct Drive Motor HP			1/2	1	3/4	1	1	1
Motor Full Load Amps			6.7	11.5	8.8	11.5	11.5	11.5
RPM Range			300 - 1300					
Heating Blower Control (Htg Off-Delay)			Adjustable: 90, 120 (factory-set), 150, 180 seconds					
Cooling Blower Control (Time Delay Relay)			Adjustable: 90 (factory-set), 5, 30, 60 seconds					
Blower Wheel Diameter x Width - In. (mm)			11 x 8	11 x 10	11 x 8	11 x 10	11 x 10	11 x 11
Air Filtration System			Field Supplied Filter					
Filter used for Certified Watt Data			325531-40††					
ELECTRICAL DATA								
Input Voltage		Volts-Hertz-Phase	115-60-1					
Operating Voltage Range		Min-Max	104-127					
Maximum Unit Amps			8.8	14.4	11.4	14.4	14.4	14.4
Unit Ampacity			11.5	18.5	14.7	18.5	18.5	18.5
Maximum Wire Length (measure 1 way in Ft (m))		Feet	32	31	25	31	31	31
		Meters	9.8	9.4	7.5	9.4	9.4	9.4
Minimum Wire Size		AWG	14	12	14	12	12	12
Max. Fuse/Ckt Bkr Size (Time-Delay Type Recommended)		Amps	15	20	15	20	20	20
Transformer Capacity (24 VAC output)			40VA					
External Control Power Available		Heating	28VA					
		Cooling	35VA					

SPECIFICATIONS (Continued)

UNIT SIZE		060C17--14	060C21--20	080C17--14	080C21--20	100C21--22	120C24--22
GAS CONTROLS							
Burners		3	3	4	4	5	6
Gas Connection Size		1/2in. NPT					
Gas Valve (Redundant)	Mfr	WhiteRodgers™					
Min. inlet pressure	(in.w.c.)	4.5 (Natural Gas)					
Max. inlet pressure	(in.w.c.)	13.6 (Natural Gas)					
Manufactured (Mobile Home Kit)		See Accessory Listing					
Ignition Device		Silicon Nitride					
Factory installed orifice		44	44	44	44	44	44
CONNECTIONS							
Communication System		Infinity®; Infinity® Zoning					
Thermostat Connections		R, W/W1, W2, Y/Y2, Y1, G Com 24V, DHUM					
Accessory Connections		EAC-1 (115 VAC); HUM (24 VAC); 1-STG AC (via Y/Y2); 2-STG AC (cia Y/Y2 and Y1)					

*. Gas input ratings are certified for elevations to 2000 ft. (610 M). In USA, For elevations above 2000 ft (610 M), reduce ratings 4 percent for each 1000 ft (305 M) above sea level. Refer to National Fuel Gas Code NFPA 54/ANSI Z223.1 Table F.4 or furnace installation instructions.
†. Capacity in accordance with U.S. Government DOE test procedures.
‡. Capacity in accordance with U.S. Government DOE test procedures.
**. Airflow shown is for bottom only return-air supply for the as-shipped speed tap. For air delivery above 1800 CFM, see Air Delivery table for other options. A filter is required for each return-air supply. An airflow reduction of up to 7 percent may occur when using the factory-specified 4-5/16-in. (110 mm) wide, high efficiency media filter.
††. See Accessory List for part numbers available.

Table 1 – Default Airflow Settings*

Unit Size	All Heating Modes	High Cooling	Low Cooling	Constant Fan Airflow Settings
060C17--14	Comfort 2	18	12	1 – 15
060C21--20		19	14	1 – 3
080C17--14		16	10	1 – 9
080C21--20		18	13	1 – 14
100C21--22		20	14	1 – 14
120C24--22		18	13	1 – 14

*. Setting 1 is the default setting for constant fan.

Table 2 – 060C17--14 – Airflow in CFM

Setting	ESP (in.w.c.)									
	0.1	0.2	0.3	0.4	0.5	0.6	0.7	0.8	0.9	1
*1	400									
2	450									
3	488									
4	525									
5	555									
6	600									
7	650									
8	700									
9	740									
10	800									
11	875									
‡12	925									
13	975									
14	1000									
15	1050									
16	1138									1115
17	1200							1180	1145	1115
**18	1225						1210	1180	1145	1115
19	1300					1275	1245	1210	1180	1145	1115
Constant Fan Airflow (cfm)	Settings 1 - 15 (*400 - 1050 cfm)									
	Settings above 15 are not recommended									

Setting	Heat Stage		
	Low	Intermediate	High
Comfort 1	300	470	845
Comfort 2††	325	520	930
Efficiency 1	350	590	1045
Efficiency 2	410	640	1200

*. Constant Fan Default
†. Operation in this range is not recommended because high heat operation will exceed 1.0" w.c. ESP.
‡. Low Cooling Default
**. High Cooling Default
††. Heating Default

For Heating Settings
Eff2 will increase heating airflow (when unit is capable)
Eff1 airflow will give midpoint rise
Com2 will decrease heating airflow (default)
Com1 will give the lowest heating airflow

Notes:
ESP is External Static Pressure
Airflow values up to 1 in. w.c. ESP (unless noted)

Table 3 – 060C21--20– Airflow in CFM

Setting	ESP (in.w.c.)									
	0.1	0.2	0.3	0.4	0.5	0.6	0.7	0.8	0.9	1
*1	600									
2	650									
3	700									
4	740									
5	800									
6	875									
7	925									
8	975									
9	1000									
10	1050									
11	1138									
12	1200									
13	1225									
‡14	1300									
15	1400									
16	1480									
17	1600									
18	1625									
**19	1750									1720
20	1850						1845	1805	1765	1720
21	1910					1885	1845	1805	1765	1720
22	2000			1955	1920	1885	1845	1805	1765	1720
Constant Fan Airflow (cfm)	Settings 1 - 3 (*600 - 700 cfm)									
	Settings above 3 are not recommended									

Setting	Heat Stage		
	Low	Intermediate	High
Comfort 1	300	470	850
Comfort 2††	395	505	925
Efficiency 1	475	600	1020
Efficiency 2	530	625	1180

*. Constant Fan Default
†. Operation in this range is not recommended because high heat operation will exceed 1.0" w.c. ESP.
‡. Low Cooling Default
**. High Cooling Default
††. Heating Default

For Heating Settings
Eff2 will increase heating airflow (when unit is capable)
Eff1 airflow will give midpoint rise
Com2 will decrease heating airflow (default)
Com1 will give the lowest heating airflow

Notes:
ESP is External Static Pressure
Airflow values up to 1 in. w.c. ESP (unless noted)

Table 4 – 080C17--14 – Airflow in CFM

Setting	ESP (in.w.c.)									
	0.1	0.2	0.3	0.4	0.5	0.6	0.7	0.8	0.9	1
*1	488									
2	525									
3	555									
4	600									
5	650									
6	700									
7	740									
8	800									
9	875									
‡10	925									
11	975									
12	1000									
13	1050									
14	1138									
15	1200									
**16	1225									
17	1300									
18	1400									
19	1450									
Constant Fan Airflow (cfm)	Settings 1 - 9 (*488 - 875 cfm)									
	Settings above 9 are not recommended									

	Heat Stage		
Setting	Low	Intermediate	High
Comfort 1	450	710	1010
Comfort 2††	475	780	1100
Efficiency 1	510	840	1220
Efficiency 2	580	930	1375

*. Constant Fan Default
†. Operation in this range is not recommended because high heat operation will exceed 1.0" w.c. ESP.
‡. Low Cooling Default
**. High Cooling Default
††. Heating Default

For Heating Settings
Eff2 will increase heating airflow (when unit is capable)
Eff1 airflow will give midpoint rise
Com2 will decrease heating airflow (default)
Com1 will give the lowest heating airflow

Notes:
ESP is External Static Pressure
Airflow values up to 1 in. w.c. ESP (unless noted)

Table 5 – 080C21--20 – Airflow in CFM

Setting	ESP (in.w.c.)									
	0.1	0.2	0.3	0.4	0.5	0.6	0.7	0.8	0.9	1
*1	650									
2	700									
3	740									
4	800									
5	875									
6	925									
7	975									
8	1000									
9	1050									
10	1138									
11	1200									
12	1225									
‡13	1300									
14	1400									
15	1480									
16	1600									
17	1625									
**18	1750									
19	1850									
20	1910									1880
21	2000							1970	1925	1880
Constant Fan Airflow (cfm)	Settings 1 - 14 (*650 - 1400 cfm)									
	Settings above 14 are not recommended									

	Heat Stage		
Setting	Low	Intermediate	High
Comfort 1	450	670	1055
Comfort 2††	475	720	1150
Efficiency 1	535	780	1285
Efficiency 2	620	850	1455

*. Constant Fan Default
†. Operation in this range is not recommended because high heat operation will exceed 1.0" w.c. ESP.
‡. Low Cooling Default
**. High Cooling Default
††. Heating Default

For Heating Settings
Eff2 will increase heating airflow (when unit is capable)
Eff1 airflow will give midpoint rise
Com2 will decrease heating airflow (default)
Com1 will give the lowest heating airflow

Notes:
ESP is External Static Pressure
Airflow values up to 1 in. w.c. ESP (unless noted)

Table 6 – 100C21--22 – Airflow in CFM

Setting	ESP (in.w.c.)									
	0.1	0.2	0.3	0.4	0.5	0.6	0.7	0.8	0.9	1
*1	650									
2	700									
3	740									
4	800									
5	875					†				
6	925									
7	975									
8	1000									
9	1050									
10	1138									
11	1200									
12	1225									
13	1300									
‡14	1400									
15	1480									
16	1600									
17	1625									
18	1750									
19	1850									
**20	1910									
21	2000								1995	1950
22	2110						2085	2040	1995	1950
Constant Fan Airflow (cfm)	Settings 1 - 14 (*650 - 1400 cfm)									
	Settings above 14 are not recommended									

Setting	Heat Stage		
	Low	Intermediate	High
Comfort 1	500	825	1210
Comfort 2††	575	910	1305
Efficiency 1	645	1000	1445
Efficiency 2	730	1090	1615

*. Constant Fan Default
†. Operation in this range is not recommended because high heat operation will exceed 1.0" w.c. ESP.
‡. Low Cooling Default
**. High Cooling Default
††. Heating Default

For Heating Settings
Eff2 will increase heating airflow (when unit is capable)
Eff1 airflow will give midpoint rise
Com2 will decrease heating airflow (default)
Com1 will give the lowest heating airflow

Notes:
ESP is External Static Pressure
Airflow values up to 1 in. w.c. ESP (unless noted)

Table 7 – 120C24--22 – Airflow in CFM

Setting	ESP (in.w.c.)									
	0.1	0.2	0.3	0.4	0.5	0.6	0.7	0.8	0.9	1
*1	650									
2	700									
3	740									
4	800									
5	875					†				
6	925									
7	975									
8	1000									
9	1050									
10	1138									
11	1200									
12	1225									
‡13	1300									
14	1400									
15	1480									
16	1600									
17	1625									
**18	1750									
19	1850									
20	1910									
21	2000								1975	1920
22	2110						2080	2030	1975	1920
Constant Fan Airflow (cfm)	Settings 1 - 14 (*650 - 1400 cfm)									
	Settings above 14 are not recommended									

Setting	Heat Stage		
	Low	Intermediate	High
Comfort 1	600	1000	1450
Comfort 2††	700	1100	1610
Efficiency 1	785	1250	1735
Efficiency 2	890	1375	1900

*. Constant Fan Default
†. Operation in this range is not recommended because high heat operation will exceed 1.0" w.c. ESP.
‡. Low Cooling Default
**. High Cooling Default
††. Heating Default

For Heating Settings
Eff2 will increase heating airflow (when unit is capable)
Eff1 airflow will give midpoint rise
Com2 will decrease heating airflow (default)
Com1 will give the lowest heating airflow

Notes:
ESP is External Static Pressure
Airflow values up to 1 in. w.c. ESP (unless noted)

TYPICAL WIRING SCHEMATIC

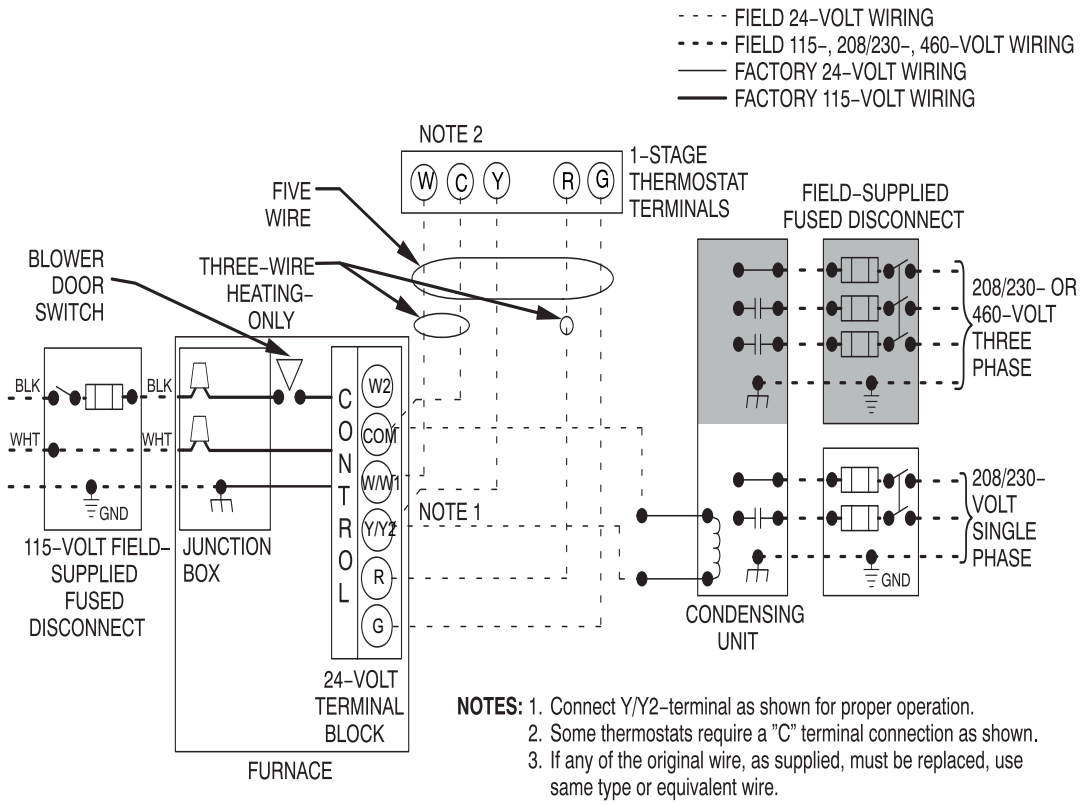

A11401

FURNACE CONTROL BOARD

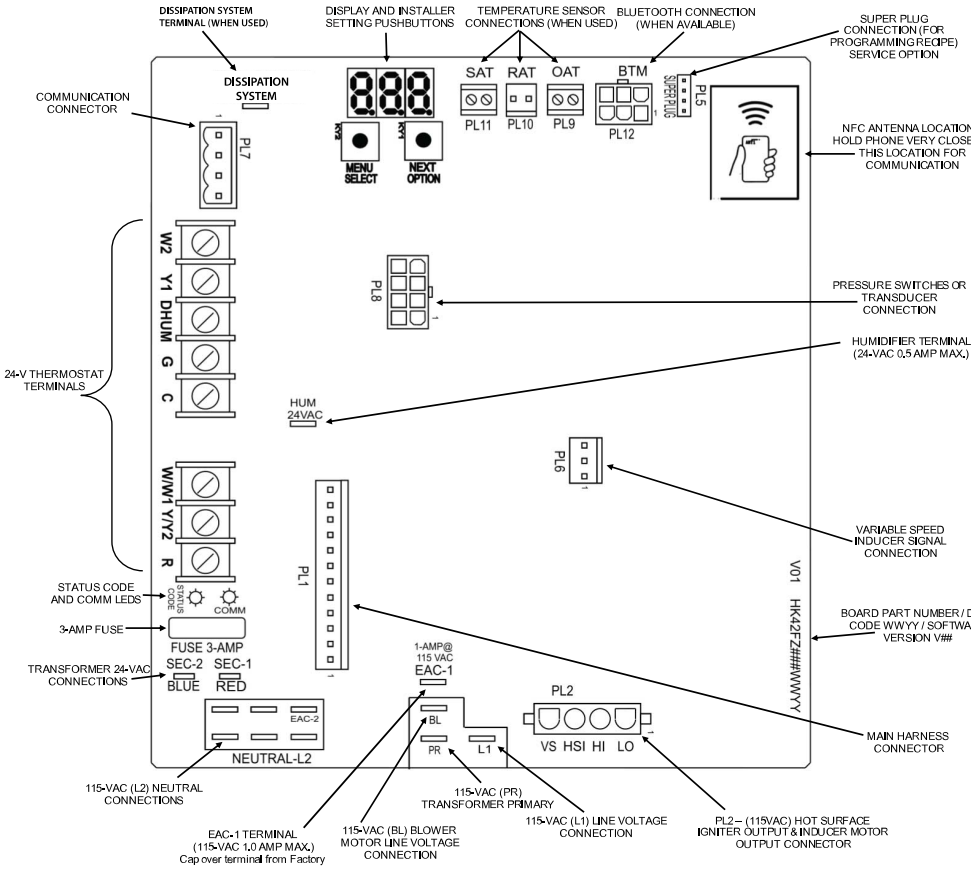

A230452

MAXIMUM ALLOWABLE EXPOSED VENT LENGTHS INSULATION TABLE

Maximum Allowable Exposed Vent Length in Unconditioned Space - Ft.

Winter Design Temp °F	Unit Size	40,000* BTUH									60,000 BTUH											
		Uninsulated			3/8-in. Insulation			1/2-in. Insulation			Uninsulated				3/8-in. Insulation				1/2-in. Insulation			
	Pipe Dia. in.	1 ½	2	2 ½	1 ½	2	2 ½	1 ½	2	2 ½	1 ½	2	2 ½	3	1 ½	2	2 ½	3	1 ½	2	2 ½	3
	20	20	20	20	20	50	45	20	60	50	20	30	30	25	20	75	65	60	20	85	75	65
	0	10	5	5	20	25	20	20	30	25	15	15	10	10	20	40	30	25	20	45	40	30
	-20	5			20	15	10	20	20	15	10	5			20	25	20	15	20	30	25	20
	-40				15	10	5	15	15	10	5				20	15	15	10	20	20	15	10

Winter Design Temp °F	Unit Size	80,000 BTUH														
		Uninsulated					3/8-in. Insulation					1/2-in. Insulation				
	Pipe Dia. in.	1 ½	2	2 ½	3	4	1 ½	2	2 ½	3	4	1 ½	2	2 ½	3	4
	20	15	40	40	35	30	15	50	90	75	65	15	50	70	70	70
	0	15	20	15	10	5	15	50	45	35	30	15	50	50	40	35
	-20	15	10	5			15	35	30	20	15	15	40	30	25	15
	-40	10	5				15	25	20	15	5	15	30	25	20	10

Winter Design Temp °F	Unit Size	100,000 BTUH											
		Uninsulated				3/8-in. Insulation				1/2-in. Insulation			
	Pipe Dia. in.	2	2 ½	3	4	2	2 ½	3	4	2	2 ½	3	4
	20	20	50	40	35	20	80	95	80	20	80	105	90
	0	20	20	15	10	20	55	45	35	20	65	55	45
	-20	15	10	5		20	35	30	20	20	45	35	25
	-40	10	5			20	25	20	10	20	30	25	15

Winter Design Temp °F	Unit Size	120,000 BTUH									140,000 BTUH								
		Uninsulated			3/8-in. Insulation			1/2-in. Insulation			Uninsulated			3/8-in. Insulation			1/2-in. Insulation		
	Pipe Dia. in.	2 ½	3	4	2 ½	3	4	2 ½	3	4	2 ½	3	4	2 ½	3	4	2 ½	3	4
	20	10	50	40	10	75	95	10	75	105	5	55	50	5	65	105	5	65	125
	0	10	20	15	10	55	45	10	65	50	5	25	15	5	65	50	5	65	60
	-20	10	10		10	35	25	10	45	30	5	10	5	5	45	30	5	50	40
	-40	10	5		10	25	15	10	30	20	5	5		5	30	20	5	35	25

Maximum Allowable Exposed Vent Length in Unconditioned Space - Meters

Winter Design Temp °C	Unit Size	40,000* BTUH									60,000 BTUH											
		Uninsulated			3/8-in. Insulation			1/2-in. Insulation			Uninsulated				3/8-in. Insulation				1/2-in. Insulation			
	Pipe Dia. mm	38	51	64	38	51	64	38	51	64	38	51	64	76	38	51	64	76	38	51	64	76
	-7	6.1	6.1	6.1	6.1	15.2	13.7	6.1	18.3	15.2	6.1	9.1	9.1	7.6	6.1	22.9	19.8	18.3	6.1	25.9	22.9	19.8
	-18	3.0	1.5	1.5	6.1	7.6	6.1	6.1	9.1	7.6	4.6	4.6	3.0	3.0	6.1	12.2	9.1	7.6	6.1	13.7	12.2	9.1
	-29	1.5			6.1	4.6	3.0	6.1	6.1	4.6	3.0	1.5			6.1	7.6	6.1	4.6	6.1	9.1	7.6	6.1
	-40				4.6	3.0	1.5	4.6	4.6	3.0	1.5				6.1	4.6	4.6	3.0	6.1	6.1	4.6	3.0

Winter Design Temp °C	Unit Size	80,000 BTUH														
		Uninsulated					3/8-in. Insulation					1/2-in. Insulation				
	Pipe Dia. mm	38	51	64	76	102	38	51	64	76	102	38	51	64	76	102
	-7	4.6	12.2	12.2	10.7	9.1	4.6	15.2	27.4	22.9	19.8	4.6	15.2	21.3	21.3	21.3
	-18	4.6	6.1	4.6	3.0	1.5	4.6	15.2	13.7	10.7	9.1	4.6	15.2	15.2	12.2	10.7
	-29	4.6	3.0	1.5			4.6	10.7	9.1	6.1	4.6	4.6	12.2	9.1	7.6	4.6
	-40	3.0	1.5				4.6	7.6	6.1	4.6	1.5	4.6	9.1	7.6	6.1	3.0

Winter Design Temp °C	Unit Size	100,000 BTUH											
		Uninsulated				3/8-in. Insulation				1/2-in. Insulation			
	Pipe Dia. mm	51	64	76	102	51	64	76	102	51	64	76	102
	-7	6.1	15.2	12.2	10.7	6.1	24.4	28.9	24.4	6.1	24.4	32.0	27.4
	-18	6.1	6.1	4.6	3.0	6.1	16.8	13.7	10.7	6.1	19.8	16.7	13.7
	-29	4.6	3.0	1.5		6.1	10.7	9.1	6.1	6.1	13.7	10.7	7.6
	-40	3.0	1.5			6.1	7.6	6.1	3.0	6.1	9.1	7.6	4.6

Winter Design Temp °C	Unit Size	120,000 BTUH									140,000 BTUH								
		Uninsulated			3/8-in. Insulation			1/2-in. Insulation			Uninsulated			3/8-in. Insulation			1/2-in. Insulation		
	Pipe Dia. mm	64	76	102	64	76	102	64	76	102	64	76	102	64	76	102	64	76	102
	-7	3.0	15.2	12.2	3.0	22.9	28.9	3.0	22.9	32.0	1.5	16.7	15.2	1.5	19.8	32.0	1.5	19.8	38.1
	-18	3.0	6.1	4.6	3.0	16.8	13.7	3.0	19.8	15.2	1.5	7.6	4.6	1.5	19.8	15.2	1.5	19.8	18.3
	-29	3.0	3.0		3.0	10.7	7.6	3.0	13.7	9.1	1.5	3.0	1.5	1.5	13.7	9.1	1.5	15.2	12.2
	-40	3.0	1.5		3.0	7.6	4.6	3.0	9.1	6.1	1.5	1.5		1.5	9.1	6.1	1.5	35	7.6

* Pipe length (ft) specified for maximum pipe lengths located in unconditioned spaces. Pipes located in unconditioned space cannot exceed total allowable pipe length calculated from Maximum Allowable Exposed Vent Length in Unconditioned Space.

† Insulation thickness based on R value of 3.5 per in.

Manufacturer reserves the right to change, at any time, specifications and designs without notice and without obligations.

MAXIMUM EQUIVALENT VENT LENGTH

NOTE: *Maximum Equivalent Vent Length (MEVL) includes standard and concentric vent termination and does NOT include elbows. Use Deductions from Maximum Equivalent Vent Length to determine allowable vent length for each application.*

Maximum Equivalent Vent Length

Maximum Equivalent Vent Length -Feet

Unit Size		60,000				80,000					100,000				120,000		
Altitude (feet)	Pipe Dia. (in)	1 ½	2	2 ½	3	1 ½	2	2 ½	3	4	2	2 ½	3	4	2 ½	3	4
	0-2000	50	100	175	200	30	95	130	175	200	45	80	175	200	10	75	185
	2001-3000	45	95	165	185		70	125	165	185	40	75	165	185		70	175
	3001-4000	40	90	155	175	25		115	155	175	38		155	175	5	65	165
	4001-4500	35	85	150	170	23		110	150	165	36	70		170	N/A	60	160
	4501-5000		80		165	22			145	160			150	165			
	5001-6000	37	75	140	155			100	135	150	33		140	155			155
	6001-7000	35	70	130	145	20		90	125	140	31		135	145		50	140
	7001-8000	32	66	120	135	18	66		120	125	29	66	125	135		46	130
	8001-9000	30	62	115	125	17	62	80	110	115	27	62	115	125		43	120
	9001-10000	27	57	105	115	15	57	75	100	105	24	57	100	115		39	115

Maximum Equivalent Vent Length - Meters

Unit Size		60,000				80,000					100,000				120,000		
Altitude (meters)	Pipe Dia. (mm)	38	51	64	76	38	51	64	76	102	51	64	76	102	64	76	102
	0-610	15.2	30.4	53.3	60.9	9.1	28.9	39.6	53.3	60.9	13.7	24.3	53.3	60.9	3.0	22.8	56.3
	611-914	13.7	28.9	50.2	56.3		21.3	38.1	50.2	56.3	12.1	22.8	50.2	56.3		21.3	53.3
	915-1219	12.1	27.4	47.2	53.3	7.6		35.0	47.2	53.3	11.5		47.2	53.3	1.5	19.8	50.2
	1220-1370	10.6	25.9	45.7	51.8	7.0		33.5	45.7	50.2	10.9	21.3		51.8	NA	18.2	48.7
	1371-1524		24.3		50.2	6.7			44.1	48.7			45.7	50.2			
	1525-1829	11.2	22.8	42.6	47.2			30.4	41.1	45.7	10.0		42.6	47.2			47.2
	1830-2134	10.6	21.3	39.6	44.1	6.0		27.4	38.1	42.6	9.4		41.1	44.1		15.2	42.6
	2135-2438	9.7	20.1	36.5	41.1	5.4	20.1		36.5	38.1	8.8	20.1	38.1	41.1		14.0	39.6
	2439-2743	9.1	18.8	35.0	38.1	5.1	18.8	24.3	33.5	35.0	8.2	18.8	35.0	38.1		13.1	36.5
	2744-3048	8.2	17.3	32.0	35.0	4.5	17.3	22.8	30.4	32.0	7.3	17.3	30.4	35.0		11.8	35.0

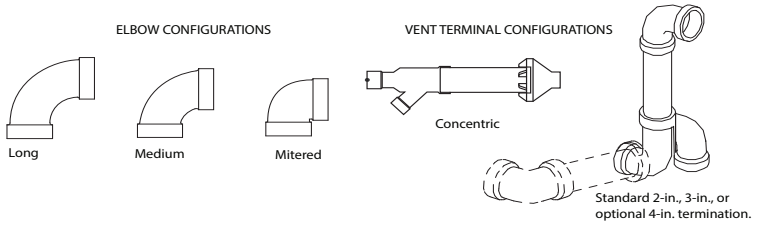

A13110

Deductions from Maximum Equivalent Vent Length - Ft. (M)

Pipe Diameter (in):	1-1/2		2		2-1/2		3		4	
Mitered 90º Elbow	8	(2.4)	8	(2.4)	8	(2.4)	8	(2.4)	8	(2.4)
Medium Radius 90º Elbow	5	(1.5)	5	(1.5)	5	(1.5)	5	(1.5)	5	(1.5)
Long Radius 90º Elbow	3	(0.9)	3	(0.9)	3	(0.9)	3	(0.9)	3	(0.9)
Mitered 45º Elbow	4	(1.2)	4	(1.2)	4	(1.2)	4	(1.2)	4	(1.2)
Medium Radius 45º Elbow	2.5	(0.8)	2.5	(0.8)	2.5	(0.8)	2.5	(0.8)	2.5	(0.8)
Long Radius 45º Elbow	1.5	(0.5)	1.5	(0.5)	1.5	(0.5)	1.5	(0.5)	1.5	(0.5)
Tee	16	(4.9)	16	(4.9)	16	(4.9)	16	(4.9)	16	(4.9)
Concentric Vent Termination	NA		0	(0.0)	NA		0	(0.0)	NA	
Standard Vent Termination	0	(0.0)	0	(0.0)	0	(0.0)	0	(0.0)	0	(0.0)

NOTES:

1. Use only the smallest diameter pipe possible for venting. Over-sizing may cause flame disturbance or excessive vent terminal icing or freeze-up.
2. NA - Not allowed. Pressure switch will not close, or flame disturbance may result.
3. Vent sizing for Canadian installations over 4500 ft. (1370 M) above sea level are subject to acceptance by the local authorities having jurisdiction.
4. Size both the combustion air and vent pipe independently, then use the larger size for both pipes.
5. Assume the two 45° elbows equal one 90° elbow. Wide radius elbows are desirable and may be required in some cases.
6. Elbow and pipe sections within the furnace casing and at the vent termination should not be included in vent length or elbow count.
7. The minimum pipe length is 5 ft. (2 M) linear feet (meters) for all applications.
8. Use 3-in. (76 mm) diameter vent termination kit for installations requiring 4-in. (102 mm) diameter pipe.
9. A running Tee in the Combustion Air Pipe adds 0 ft. to the TEVL of the vent length.

Venting System Length Calculations

The Total Equivalent Vent Length (TEVL) for **EACH** combustion air or vent pipe equals the length of the venting system, plus the equivalent length of elbows used in the venting system from Maximum Equivalent Vent Length.

Standard vent terminations or factory accessory concentric vent terminations count for zero deduction.

See vent system manufacturer's data for equivalent lengths of flexible vent pipe or other termination systems. **DO NOT ASSUME** that one foot of flexible vent pipe equals one foot of straight PVC/ABS DWV vent pipe.

Compare the Total Equivalent Vent Length to the Maximum Equivalent Vent Lengths Table.

Example 1

A direct-vent 60,000 BTUH furnace installed at 2100 ft. (640M). Venting system includes **FOR EACH PIPE:**
70 feet (22 M) of vent pipe, 65 feet (20 M) of combustion air inlet pipe, (3) 90º long-radius elbows, (2) 45º long-radius elbows, and a factory accessory concentric vent kit.

Can this application use 2" (50 mm ND) PVC/ABS DWV vent piping?

Measure the required linear length of air inlet and vent pipe; insert the longest of the two here					70 ft. (22 M)	Use length of the longer of the vent or air inlet piping system
Add equiv length of (3) 90º long-radius elbows (use the highest number of elbows for either the vent or inlet pipe)	3	x	3 ft. (0.9 M)	=	9 ft. (2.7 M)	From Deductions from Maximum Equivalent Vent Length
Add equiv length of (2) 45º long-radius elbows (use the highest number of elbows for either the vent or inlet pipe)	2	x	1.5 ft. (0.5 M)	=	3 ft. (0.9 M)	From Deductions from Maximum Equivalent Vent Length
Add equiv length of factory concentric vent term					0 ft.	From Deductions from Maximum Equivalent Vent Length
Add correction for flexible vent pipe, if any					0 ft.	From Vent Manufacturer's instructions; zero for PVC/ABS DWV
Total Equivalent Vent Length (TEVL)					82 ft. (25 M)	Add all of the above lines
Maximum Equivalent Vent Length (MEVL)					95 ft. (29 M)	For 2" pipe from Maximum Equivalent Vent Length
Is TEVL less than MEVL?					YES	Therefore, 2" pipe MAY be used

Example 2

A direct-vent 60,000 BTUH furnace installed at 2100 ft. (640M). Venting system includes **FOR EACH PIPE:**
100 feet (30 M) of vent pipe, 95 feet (29 M) of combustion air inlet pipe, (3) 90º long-radius elbows, and a polypropylene concentric vent kit.

Also includes 20 feet (6.1 M) of flexible polypropylene vent pipe, included within the 100 feet (30 M) of vent pipe.

VERIFY FROM POLYPROPYLENE VENT MANUFACTURER'S INSTRUCTIONS for the multiplier correction for flexible vent pipe.

Can this application use 60mm o.d. (2") polypropylene vent piping? If not, what size piping can be used?

Measure the required linear length of **RIGID** air inlet and vent pipe; insert the longest of the two here: 100 ft. Of rigid pipe - 20 ft. Of flexible pipe				=	80 ft. (24 M)	Use length of the longer of the vent or air inlet piping system
Add equiv length of (3) 90º long-radius elbows (use the highest number of elbows for either the vent or inlet pipe)	3	x	5 ft. (1.5 M)	=	15 ft. (4.6 M)	Example from polypropylene vent manufacturer's instructions, Verify from vent manufacturer's instructions.
Add equiv length of 45º long-radius elbows (use the highest number of elbows for either the vent or inlet pipe)	0	x		=	0 ft. (0 M)	
Add equiv length of factory concentric vent term	9	x	3.3 ft (0.9 M)	=	30 ft. (9 M)	
Add correction for flexible vent pipe, if any	2*	x	20 ft. (6.1 M)	=	40 ft. (12.2 M)	
* VERIFY FROM VENT MANUFACTURER'S INSTRUCTIONS; For example only, assume 1 meter of flexible 60mm (2") or 80mm (3") polypropylene pipe equals 2.0 meters (6.5 ft.) of PVC/ABS pipe.						
Total Equivalent Vent Length (TEVL)					165 ft. (50 M)	Add all of the above lines
Maximum Equivalent Vent Length (MEVL)					95 ft. (29 M)	For 2" pipe from Maximum Equivalent Vent Length
Is TEVL less than MEVL?					NO	Therefore, 60mm (2") pipe may NOT be used; try 80mm (3")
Maximum Equivalent Vent Length (MEVL)					185 ft. (57 M)	For 3" pipe from Maximum Equivalent Vent Length
Is TEVL less than MEVL?					YES	Therefore, 80mm (3") pipe MAY be used

RETURN AIR TEMPERATURE

This furnace is designed for continuous return-air minimum temperature of 60_F (15_C) db or intermittent operation down to 55_F (13_C) db such as when used with a night setback thermometer. Return-air temperature must not exceed 80_F (27_C) db. Failure to follow these return air limits may affect reliability of heat exchangers, motors and controls.

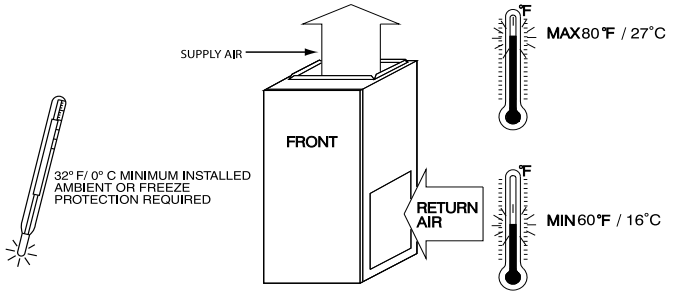

A10490

COMBUSTION-AIR PIPE FOR NON-DIRECT (1-PIPE) VENT APPLICATION

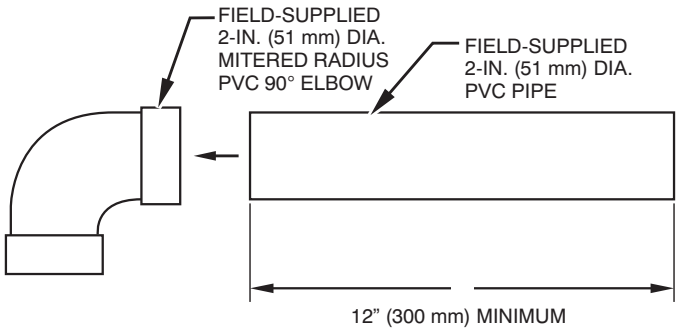

A12376

NOTE: See Installation Instructions for specific venting configurations.

DOWNFLOW SUBBASE

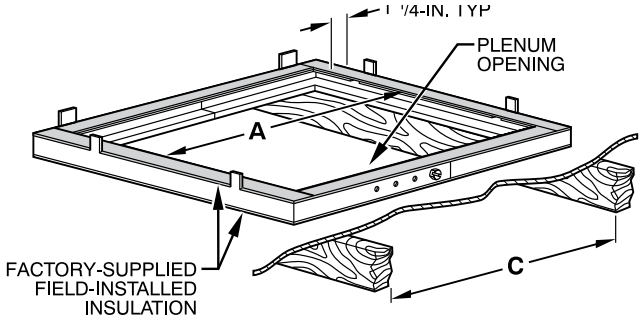

A97427

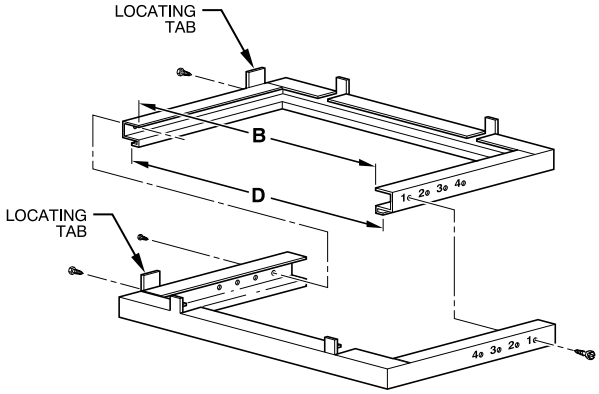

A88207

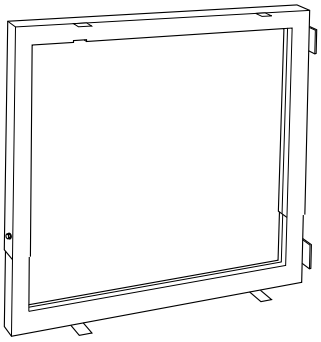

Downflow Subbase

A88202

One base fits all furnace sizes. The base is designed to be installed between the furnace and a combustible floor when no coil box is used or when a coil box other than the manufacturer's cased coil is used. It is CSA design certified for use with the manufacturer's branded furnaces when installed in downflow applications.

DIMENSIONS (IN. / MM)						
FURNACE CASING WIDTH	FURNACE IN DOWNFLOW APPLICATION	PLENUM OPENING*		FLOOR OPENING		HOLE NO. FOR WIDTH ADJUSTMENT
		A	B	C	D	
17-1/2 (444.5)	Furnace with or without Cased Coil Assembly or Coil Box	15-1/8 (384.2)	19 (482.6)	16-3/4 (425.5)	20-3/8 (517.5)	3
21 (533.4)	Furnace with or without Cased Coil Assembly or Coil Box	18-5/8 (396.4)	19 (482.6)	20-1/4 (514.4)	20-3/8 (517.5)	2
24-1/2 (622.3)	Furnace with or without Cased Coil Assembly or Coil Box	22-1/8 (562.0)	19 (482.6)	23-3/4 (603.3)	20-3/8 (517.5)	1

*. The plenum should be constructed 1/4-in. (6 mm) smaller in width and depth than the plenum dimensions shown above.

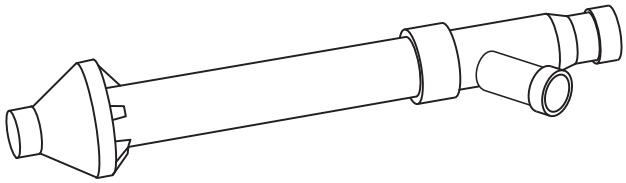

Concentric Vent Kit

A93086

A concentric vent kit allows vent and combustion-air pipes to terminate through a single exit in a roof or side wall. One pipe runs inside the other allowing venting through the inner pipe and combustion air to be drawn in through the outer pipe.

MEDIA FILTER CABINET (OPTIONAL ACCESSORY)

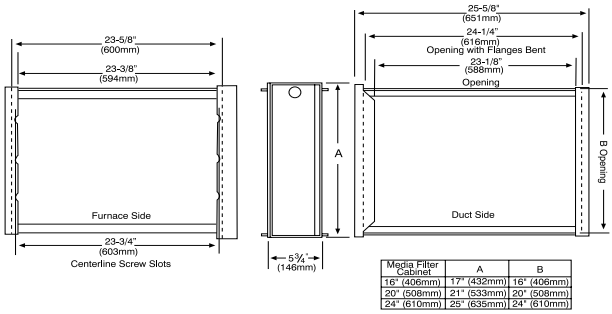

Media Filter Cabinet	A	B
16" (406mm)	17" (432mm)	16" (406mm)
20" (508mm)	21" (533mm)	20" (508mm)
24" (610mm)	25" (635mm)	24" (610mm)

NOTE: Media cabinet is matched to the bottom opening on furnace. May also be used for side return.

A12428

ACCESSORIES

PART NUMBER	DESCRIPTION	060C17--14	060C21--20	080C17--14	080C21--20	100C21--22	120C24--22
P908-0001*	Condensate Neutralizer Kit	X	X	X	X	X	X
92-1003*	Gas Valve Tower Port Adapter Kit	X	X	X	-	-	-
ACG1625NCF*	External Filter Rack, 16" x 25"	X	-	X	-	-	-
ACG2025NCJ*	External Filter Rack, 20" x 25"*	-	X	-	X	X	-
ACG2424NCL*	External Filter Rack, 24-1/2" x 24"*	-	-	-	-	-	X
325531-402*	Washable filter, 3/4" x 16" x 25"*	X	-	X	-	-	-
325531-403*	Washable filter, 3/4" x 20" x 25"*	-	X	-	X	X	-
325531-404*	Washable filter, 3/4" x 24" x 25"*	-	-	-	-	-	X
KGADA0101ALL	Coil Adapter Kits - No Offset	X	X	X	X	X	X
KGADA0201ALL	Coil Adapter Kits - Single Offset	X	X	X	X	X	X
KGADA0301ALL	Coil Adapter Kits - Double Offset	X	X	X	X	X	X
KGARP0301B17	Return Air Base (Upflow Applications) 17-1/2" wide	X	-	X	-	-	-
KGARP0301B21	Return Air Base (Upflow Applications) 21" wide	-	X	-	X	X	-
KGARP0301B24	Return Air Base (Upflow Applications) 24-1/2" wide	-	-	-	-	-	X
KGAVT0701CVT	Vent Terminal - Concentric - 2" (51 mm)	See Venting Tables					
KGAVT0801CVT	Vent Terminal - Concentric - 3" (76 mm)						
KGAVT0101BRA	Vent Terminal Bracket - 2" (51 mm)						
KGAVT0201BRA	Vent Terminal Bracket - 3" (76 mm)						
KGADC0101BVC	Vent Kit - Through the Cabinet for HZ left/right ONLY	X	X	X	X	X	X
KGAAC0101RVC	Polypropylene Inlet Air Pipe Coupling	X	X	X	X	X	X
KGAHT0101CFP	Freeze Protect Kit - Condensate Drain Line Tape	X	X	X	X	X	X
KGAHT0201CFP	Freeze Protect Kit - Condensate Trap with Heat Pad	X	X	X	X	X	X
KGAAD0110PVC	CPVC to PVC Drain Adapters - 1/2" CPVC to 3/4" PVC	X	X	X	X	X	X
KGAET0201ETK	External Trap Kit	X	X	X	X	X	X
KGACK0101HCK	Horizontal Trap Grommet - Direct Vent	All 2-Pipe Horizontal					
KGASB0201ALL	Downflow Furnace Base Kit for Combustible Floors	X	X	X	X	X	X
KGAAD0101MEC	IAQ Device Duct Adapters, 20" IAQ to 16" Side Return	20" x 25" IAQ Devices					
KGAAD0201MEC	IAQ Device Duct Adapters, 24" IAQ to 16" Side Return	24" x 25" IAQ Devices					
AGAGC9NPS01C*	Gas Conversion Kit - Nat to LP†	X	X	X	X	X	X
AGAGC9PNS01C*	Gas Conversion Kit - LP to Nat†	X	X	X	X	X	X

*. Purchased through Replacement Components
†. Factory-authorized and field installed. Fuel conversion kits are CSA (formerly AGA/CGA) recognized.
X = Accessory

ACCESSORIES (continued)

DESCRIPTION	ACCESSORYPART NUMBER	
Gas Orifice Kit - #42 (Nat Gas)	LH32DB207	See Installation Instructions for model, altitude, and heat value usages.
Gas Orifice Kit - #43 (Nat Gas)	LH32DB202	
Gas Orifice Kit - #44 (Nat Gas)	LH32DB200	
Gas Orifice Kit - #45 (Nat Gas)	LH32DB205	
Gas Orifice Kit - #46 (Nat Gas)	LH32DB208	
Gas Orifice Kit - #47 (Nat Gas)	LH32DB078	
Gas Orifice Kit - #48 (Nat Gas)	LH32DB076	
Gas Orifice Kit - #54 (LP)	LH32DB203	
Gas Orifice Kit - #55 (LP)	LH32DB201	
Gas Orifice Kit - #56 (LP)	LH32DB206	
Gas Orifice Kit - 1.25mm (LP)	LH32DB209	
Gas Orifice Kit - 1.30mm (LP)	LH32DB210	

DESCRIPTION	ACCESSORY PART NUMBER
HUMIDIFIER	Model HUM
HEAT RECOVERY VENTILATOR	Model HRV
ENERGY RECOVERY VENTILATOR	Model ERV
UV LIGHTS	Model UVL

Carrier has a wide variety of thermostats for your system, please visit **www.Carrier.com** to see all thermostat and IAQ products.

DESCRIPTION	ACCESSORY PART NUMBER	14"	17"	21"	24"
Carrier Carbon Monoxide Alarm (10 pack)	COALMCCNRB02-A10	X	X	X	X
Carrier Infinity Air Purifier - 16" x 25" (407 x 635 mm)	DGAPAXX1625	X	X	-	-
Carrier Infinity Air Purifier - 20" x 25" (508 x 635 mm)	DGAPAXX2025	-	-	X	X
Carrier Infinity Air Purifier Repl. Filter- 16" x 25" (407 x 635 mm)	PGAPXCAR1625A02	X	X	-	-
Carrier Infinity Air Purifier Repl. Filter- 20" x 25" (508 x 635 mm)	PGAPXCAR2025A02	-	-	X	X
Cartridge Media Filter - 16" (407 mm) (MERV 11)	FILXXCAR0116	X	X	-	-
Cartridge Media Filter - 16" (407 mm) (MERV 8)	FILXXCAR0016	X	X	-	-
Cartridge Media Filter - 20" (508 mm) (MERV 8)	FILXXCAR0020	-	-	X	-
Cartridge Media Filter - 20" (508 mm) (MERV11)	FILXXCAR0120	-	-	X	-
Cartridge Media Filter - 24" (610 mm) (MERV 8)	FILXXCAR0024	-	-	-	X
Cartridge Media Filter - 24" (610 mm) (MERV11)	FILXXCAR0124	-	-	-	X
EZ Flex Cabinet Side or Bottom - 16"	EZXCAB--0016	X	X	-	-
EZ Flex Cabinet Side or Bottom - 20"	EZXCAB--0020	-	-	X	X
EZ Flex Replacement Filters 16" (MERV 10)	EXPXXFIL0016	X	X	-	-
EZ Flex Replacement Filters 16" (MERV 13)	EXPXXFIL0316	X	X	-	-
EZ Flex Replacement Filters 20" (MERV 10)	EXPXXFIL0020	-	-	X	-
EZ Flex Replacement Filters 20" (MERV 13)	EXPXXFIL0320	-	-	X	-
EZ Flex Replacement Filters 24" (MERV 10)	EXPXXFIL0024	-	-	-	X
EZ Flex Replacement Filters 24" (MERV 13)	EXPXXFIL0324	-	-	-	X
EZ-Flex Filter with End Caps - 16" (407 mm) (MERV 10)	EXPXXUNV0016	X	X	-	-
EZ-Flex Filter with End Caps - 16" (407 mm) (MERV 13)	EXPXXUNV0316	X	X	-	-
EZ-Flex Filter with End Caps - 20" (508 mm) (MERV 10)	EXPXXUNV0020	-	-	X	-
EZ-Flex Filter with End Caps - 20" (508 mm) (MERV 13)	EXPXXUNV0320	-	-	X	-
EZ-Flex Filter with End Caps - 24" (610 mm) (MERV 10)	EXPXXUNV0024	-	-	-	X
EZ-Flex Filter with End Caps - 24" (610 mm) (MERV 13)	EXPXXUNV0324	-	-	-	X
Media Filter Cabinet - 20"	FILCABXL0020	-	-	X	-
Media Filter Cabinet - 24"	FILCABXL0024	-	-	-	X
Media Filter Cabinet - 16"	FILCABXL0016	X	X	-	-

© 2026 Carrier. All rights reserved.
Edition Date: 3/26

Catalog No: 59MN7C-03PD

Replaces: 59MN7C-02PD

Manufacturer reserves the right to change, at any time, specifications and designs without notice and without obligations.