Installation, Service and Operating Instructions

Hydronic System Water Buffer Tank

Model MSCA20S2D3CMW

NOTES:
Read the entire instruction manual before starting the installation.

Images are for illustration purposes only. Actual models may differ slightly.

6217620 - 02 05/2025

Specifications subject to change without notice

About these Instructions

⚠ **Take note of all symbols and notations intended to draw attention to potential hazards or important product information. These include "WARNING", "CAUTION", and "IMPORTANT". See below.**

⚠ WARNING

Indicates an imminently hazardous situation which, if not avoided, could result in death, serious injury or substantial product/property damage.

▶ *Warnings draw your attention to the presence of potential hazards or important product information.*

⚠ CAUTION

Indicates an imminently hazardous situation which, if not avoided, may result in minor injury or product/property damage.

▶ *Cautions draw your attention to the presence of potential hazards or important product information.*

IMPORTANT

▶ *Helpful hints for installation, operation or maintenance which pertain to the product.*

▶

▶ *This symbol indicates that additional, pertinent Information is to be found.*

▶ *This symbol indicates that additional, pertinent Information is to be found.*

Safety, Installation and Warranty Requirements

Please ensure that these instructions are read and understood before commencing installation. Failure to comply with the instructions listed below and details printed in this manual can cause product/property damage, severe personal injury, and/or loss of life. Ensure all requirements below are understood and fulfilled (including detailed information found in manual subsections).

▶Product documentation

Read all applicable documentation before commencing installation. Store documentation near heat pump in a readily accessible location for reference in the future by service personnel.

▶ *For a listing of applicable literature, please see section entitled "Important Regulatory and Safety Requirements".*

▶Advice to owner

Once the installation work is complete, the heating contractor must familiarize the system operator/ ultimate owner with all equipment, as well as safety precautions/requirements, shutdown procedure, and the need for professional service annually before the heating season begins.

▶Licensed professional heating contractor

The installation, adjustment, service and maintenance of this equipment must be performed by a licensed professional heating contractor.

▶ *Please see section entitled "Important Regulatory and Installation Requirements".*

▶Warranty

Information contained in this and related product documentation must be read and followed. Failure to do so renders the warranty null and void.

Important Regulatory Requirements

Codes
The installation of indirect-fired hot water storage tanks in boilers and solar system application might be governed by individual local rules and regulations for this type of product, which must be observed. Always use latest editions of codes.

In the Commonwealth of Massachusetts, all plumbing work must be done by a licensed plumber or gas-fitter and for gas installations, all gas piping must be done by a licensed gas-fitter.

Mechanical room
Ensure the mechanical room complies with the requirements of the system design guideline and/or Technical Data Manual.
The tank must be installed in a mechanical room which is never subject to freezing temperatures. Ensure water in tank is drained if not in use and danger of freezing exists in the mechanical room.

⚠ WARNING

If the heating system itself is to be filled with Glycol or any other antifreeze, the system fill must be of non-toxic or food grade antifreeze. In any circumstance, a non-toxic fluid must be used. Ensure a copy of the Safety Data Sheet (SDS) is supplied to the operator/ultimate owner of the system.

Working on the equipment
The installation, adjustment, service, and maintenance of this equipment must be done by a licensed professional heating contractor who is qualified and experienced in the installation, service, and maintenance of hot water heating systems. There are no user serviceable parts on this equipment.

Ensure main power supply to equipment, the heating system, and all external controls has been deactivated. Close main oil or gas supply valve. Take precautions to avoid accidental activation of power during service work.

- ▶ Please carefully read this manual prior to attempting installation. Any warranty is null and void if these instructions are not followed. This product must be installed observing not only the information and instruction provided in the pertinent product literature (see list on the following page), but also all local, provincial/state plumbing and building codes, as they apply to this product and all periphery equipment.
- ▶ For information regarding other System Technology componentry, please reference documentation of the respective product..
- ▶ The completeness and functionality of field supplied electrical controls and components must be verified by the heating contractor. These include low-water cutoffs, flow switches (if used), staging controls, pumps, motorized valves, air vents, thermostats, temperature controls, etc.

Important Regulatory Requirements

Instructing the system user
The installer of the system is responsible to ensure the system operator/ultimate owner is made familiar with the system functioning, its activation, and its shut-down. The operator/ultimate owner should also be instructed to complete and mail the warranty registration form in order to be eligible for limited warranty.

▶ The following topics must be covered: Proper system operation sequence. Explain the equipment as well as the need for combustion air. Demonstrate an emergency shut-down, what to do and what not. Explain that there is no substitute for proper maintenance to help ensure safe operation.

Initial startup
Initial start-up must be performed by a qualified heating contractor. Completion of the Maintenance Record by the heating contractor is also required.

▶ Refer to "Maintenance Record" on page 16 of this manual.

Operation
Please carefully read the operation and service sections of this manual prior to operation.
The installer of the system is responsible to ensure the system operator/ultimate owner is made familiar with the system functioning, its activation, and its shut-down. The operator/ultimate owner should also complete and mail the warranty registration form in order to be eligible for limited warranty.

▶ Failure to abide by all the requirements set out in the technical literature renders warranty null and void.

Technical literature
Literature applicable to all aspects of the System Water Buffer Tank:
- Technical Data Manual
- Installation, Operating and Service Instructions

▶ Leave all literature at the installation site and advise the system operator/ultimate owner where the literature can be found.

Index

Safety

About these Instructions 2
Safety, Installation and Warranty Requirements 3
Important Regulatory Requirements 4

Table of Contents

Index 6

General Information

Product Information 7
Intended Use 7
Tank Setup 7

Installation

Unpacking 8
Tank Connections 9
Floor Mounting 9
Tank Mounting 10
Tank Temperature Sensor 11
Fitting the Cosmetic Covers 12
System Connections 13
System Connections With Back-up Heat Generator 14

Maintenance

Shutting Down the Heating System 15
Check all Connections 15
Clean Outside of the Tank 15
Place System into Operation Again 15
Maintenance Record 16

Parts

Parts List 17

Technical Data

Technical Data 18

Product Information

MSCA20S2D3CMW
20 USG (75 L) capacity

Buffer tank made of steel for storing heating/cooling water in conjunction with heat pumps, with connections for back-up heat generator.

This tank version is not suitable for steam heating applications.

Intended Use

The appliance is intended to be installed and operated only in sealed unvented systems, with due attention paid to the associated installation, service and operating instructions. Heating water buffer cylinders are designed to hold only water of potable quality.

Intended use presupposes that a fixed installation in conjunction with permissible, system-specific components has been carried out.

Commercial or industrial usage for purposes other than heating a building shall be deemed inappropriate.

Any usage beyond this must be approved by the manufacturer in each individual case.

Incorrect usage or operation of the appliance (e.g. the appliance being opened by the system user) is prohibited and results in an exclusion of liability.

Incorrect usage also applies if components in the system are modified from their intended use.

Tank Setup

⚠ CAUTION

Install the system water buffer tank in a frost-protected and draft-free room. Otherwise it must be drained when not in use, in order to reduce the risk of damages caused by freezing.

- Position tank carefully and remove packaging.
- Leave adequate clearance to the wall or other objects enabling easy access to the pressure relief valve.
- Install tank(s) on flooring or foundation capable of supporting the weight of the tank(s) filled with water.

Recommended service clearances			
Rear		in. (mm)	18 (460)
Sides	May be reduced if rear pipe connections can be reached with less clearance	in. (mm)	12 (300)
Top		in. (mm)	12 (300)
Front		in. (mm)	29 (730)

Minimum clearances to combustibles		
All sides	in. (mm)	0 (0)
Floor		Combustible

Unpacking

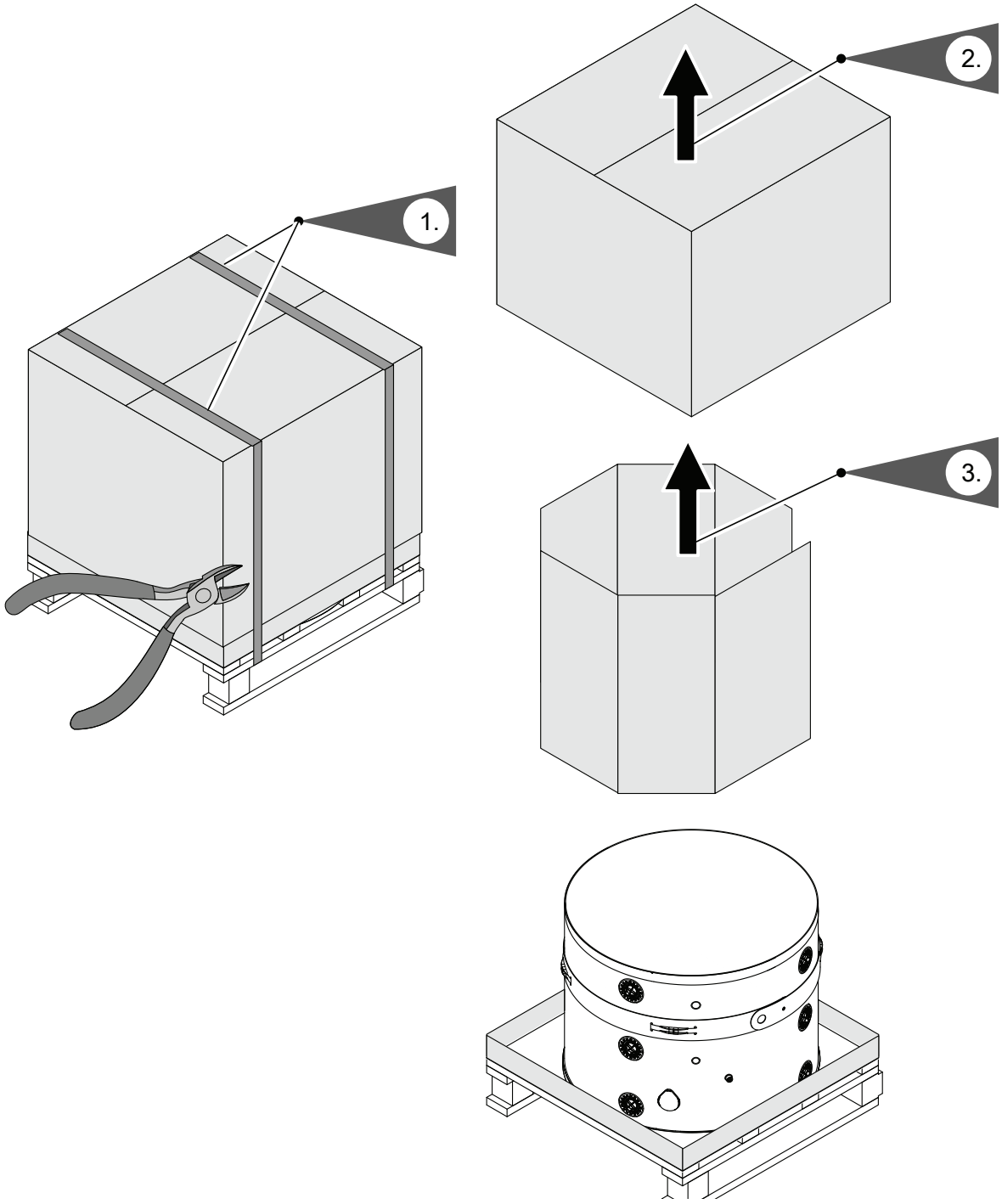

Tank Connections

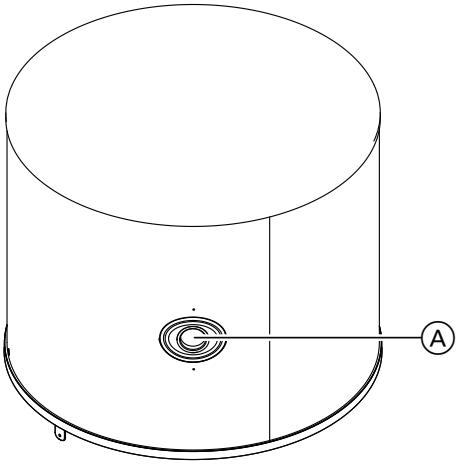

Front

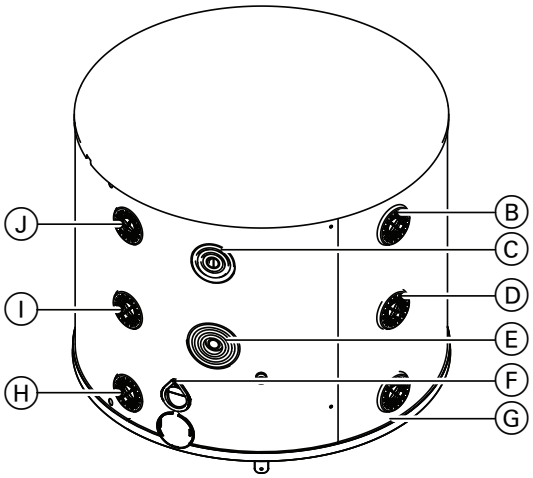

Rear

Legend

Ⓐ 1-½ Inch NPT female thread
Ⓑ 1 Inch NPT female thread, heating supply from backup heat generator
Ⓒ Ø⅝ in. (Ø16mm) temperature top sensor
Ⓓ 1 Inch NPT female thread, supply from primary heat/cool generator
Ⓔ Ø⅝ in. (Ø16mm) temperature sensor, bottom
Ⓕ Injection process plug (do not open or connect anything)
Ⓖ 1 Inch NPT female thread, return to primary heat/cool generator, lowest point/drain
Ⓗ 1 Inch NPT female thread, system return
Ⓘ 1 Inch NPT female thread, return to backup heat generator
Ⓙ 1 Inch NPT female thread, system supply, highest point/ventilation

Floor Mounting

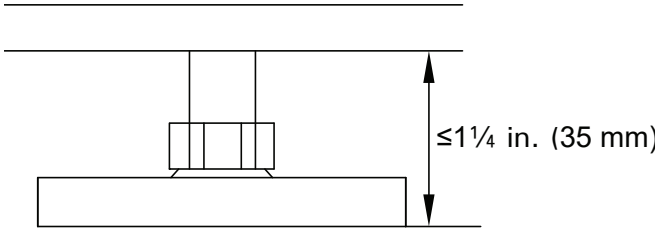

Use the adjustable feet to level the buffer tank.
Note:
Only use one or two of the adjustable feet to level the buffer tank. At least one of the adjustable feet must remain fully screwed in.
Do not extend the adjustable feet beyond a length of 1-¼ in. (35 mm).

Tank Mounting

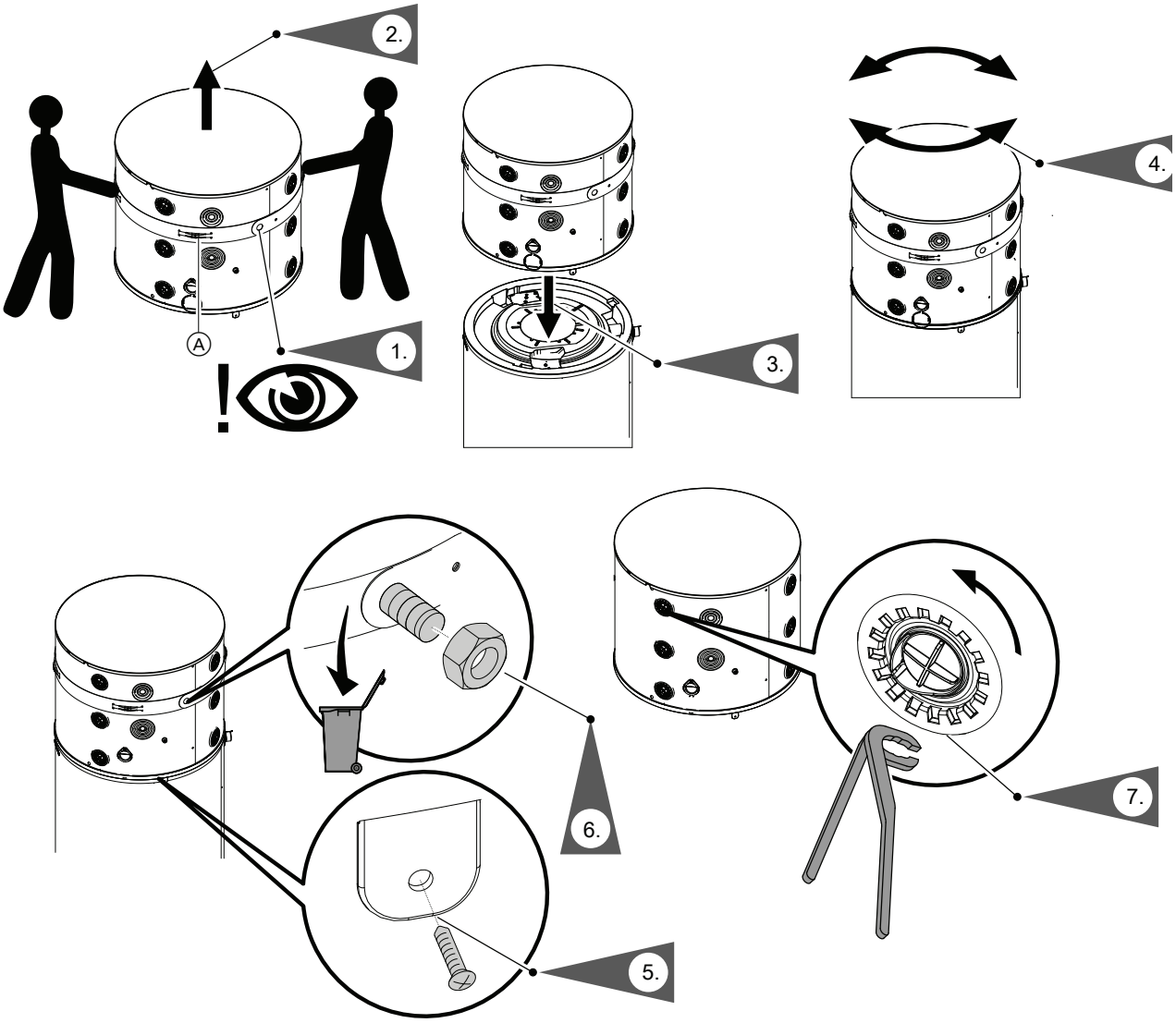

*Tank mounting only in combination with CVWC53S2D3CMW, CVWC66S2D3CMW CVWC79S2D3CMW DHW tanks.

1. Ensure that the transport strap with handles Ⓐ is closed and secured with the M10 threaded nut.
2. Use transport strap with handles Ⓐ to lift the buffer tank over the DHW tank.
3. Position the buffer tank on the DHW tank. Centre the buffer tank correctly.
4. Turn the buffer tank to achieve the required position.
5. Secure it in the selected position by screwing the screw into one of the 5 holes on the DHW tank. The holes are each offset by 45°.
6. Remove the transport strap by undoing the M10 threaded nut - Dispose of the transport strap after use.
7. Remove the caps on all 6 of the threaded connections.

- Bend the clip to break the closure.
- Pull the closure anti-clockwise until it is completely removed.

Note:
If the Buffer tank is not centred correctly on the DHW tank, the appliance may be damaged.

Note:
The thread protectors are not watertight. Unused connections must be sealed on site.

Two people are required when transporting and positioning the buffer tank.

Tank Temperature Sensor

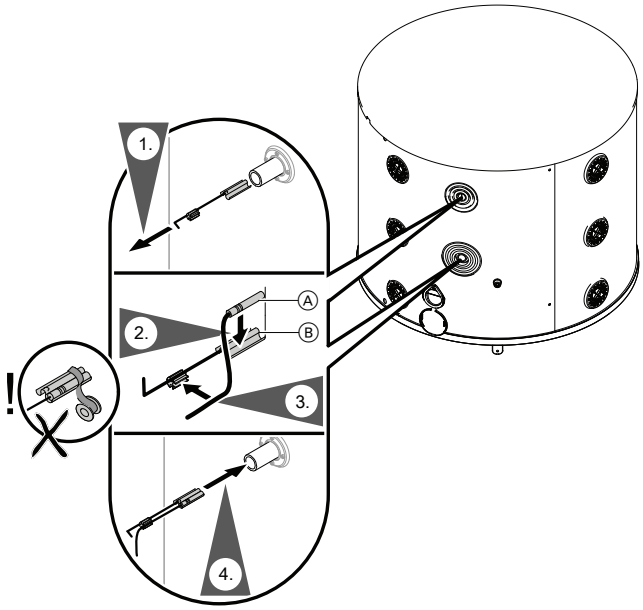

Legend

Ⓐ Buffer tank temperature sensor
Ⓑ Sensor retainer and contact spring

IMPORTANT

Never wrap insulating tape around the sensor.

1. Carefully pull sensor mounting hardware out from tank sensor well.
2. Mount sensor on the outside of the sensor spring-clip (not in the center groove) so that it is flush with the front of the sensor spring-clip.
3. Push sensor cabling into groove of mounting hardware.
4. Push the sensor retainer with sensor into the sensor well as far as it will go.

Note:
Only for operation in cooling mode - after inserting the sensor retainer, close off the sensor well with the cap.

Fitting the Cosmetic Covers

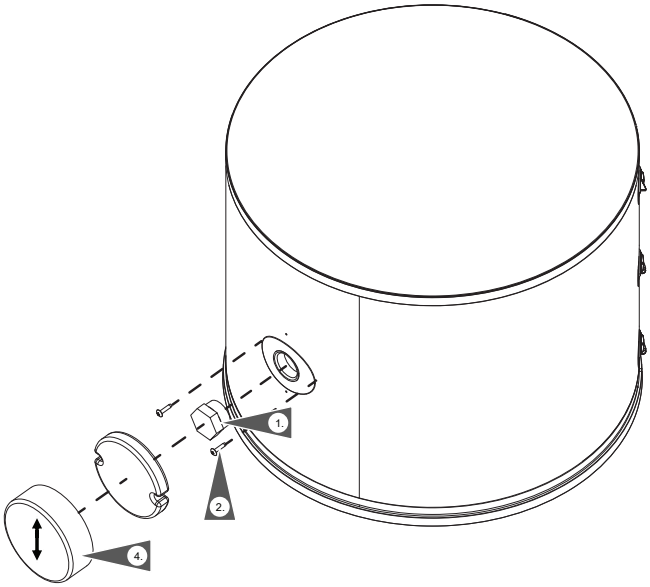

1. Close off the connection with the 1-½ in. plug.
2. Screw both fixing screws into the sheet metal jacketing.
3. Remove the protective film on the thermal insulation and secure it over the plug to prevent condensation in cooling mode.
4. Push caps onto the securing screws.

System Connections

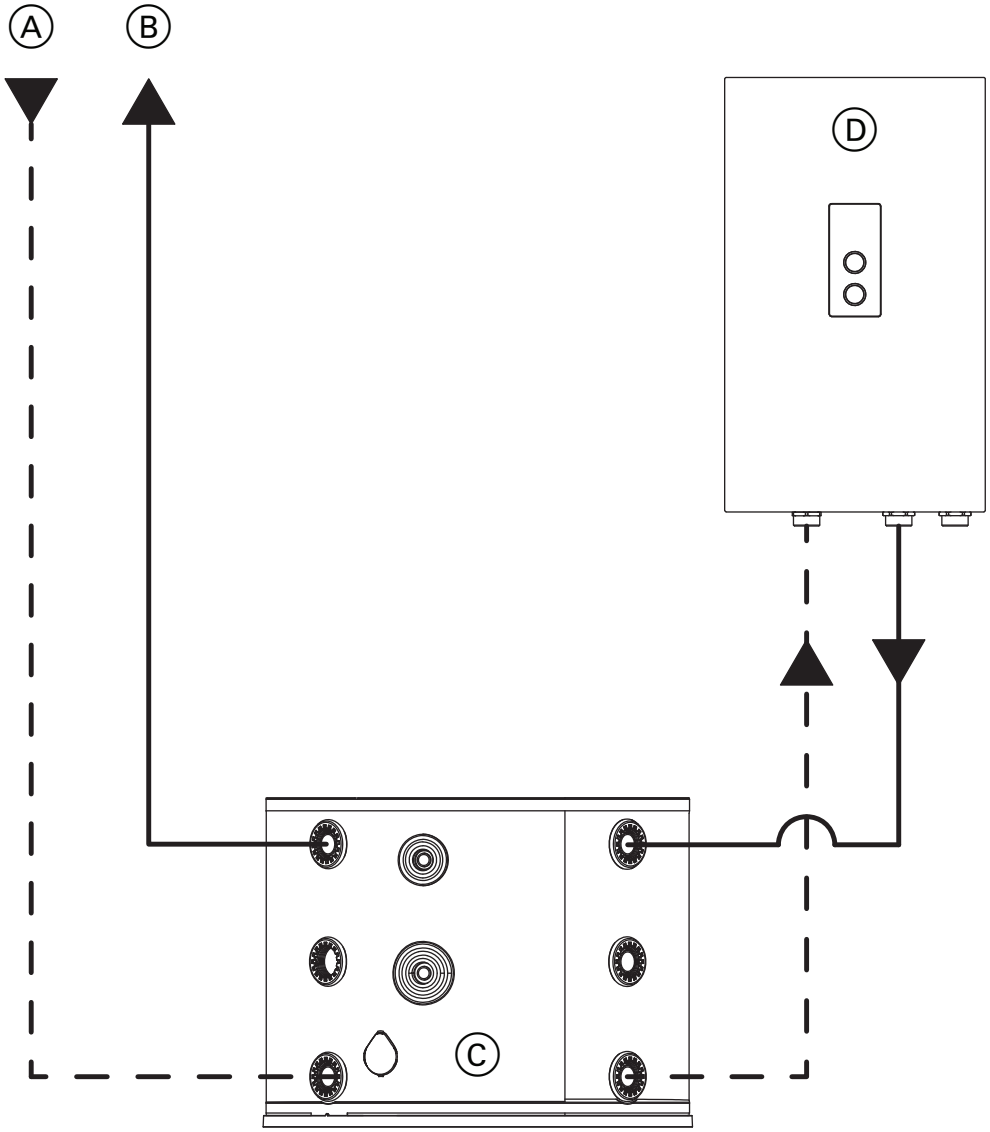

Legend

Ⓐ System Return
Ⓑ System Supply
Ⓒ Buffer Tank
Ⓓ Primary heat/cool generator (heatpump)

IMPORTANT

This is a simplified conceptual drawing only! Piping and necessary componentry must be field verified. Proper installation and functionality in the field are the responsibility of the contractor.

System Connections With Back-up Heat Generator

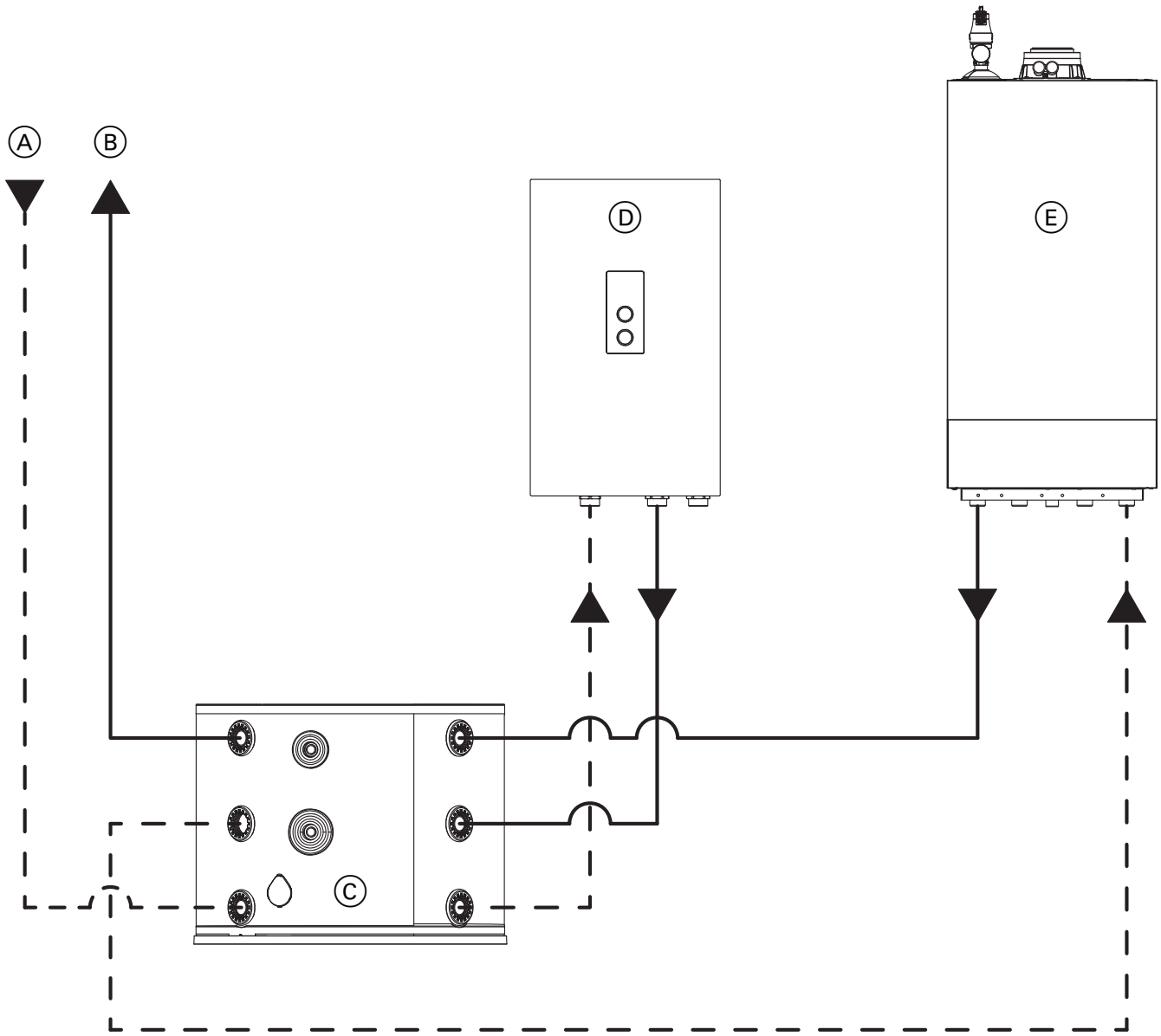

Legend

Ⓐ System Return
Ⓑ System Supply
Ⓒ Buffer Tank
Ⓓ Primary heat/cool generator (heatpump)
Ⓔ Back-up heat generator

IMPORTANT

This is a simplified conceptual drawing only! Piping and necessary componentry must be field verified. Proper installation and functionality in the field are the responsibility of the contractor.

Shutting Down the Heating System

1. Isolate the buffer tank from the hydronic system.
2. If not present, attach drainage hose to the drain valve and route to a suitable drain.
3. Open taps or air vent valve.
4. Open drain valve.

Check all Connections

1. Check heating side and domestic water side adaptors for leaks. Tighten if necessary.
2. Check sensor well for leaks. Tighten if necessary.

Clean Outside of the Tank

Clean tank encloser panel with a commercially available alcohol-based glass cleaning agent and a soft clean cloth.

Place System into Operation Again

Ensure main power supply to equipment, the heating system and all external controls are reactivated.

Maintenance Record

	Startup	Maintenance/Service	Maintenance/Service	Maintenance/Service
date:				
by:				

	Maintenance/Service	Maintenance/Service	Maintenance/Service	Maintenance/Service
date:				
by:				

	Maintenance/Service	Maintenance/Service	Maintenance/Service	Maintenance/Service
date:				
by:				

	Maintenance/Service	Maintenance/Service	Maintenance/Service	Maintenance/Service
date:				
by:				

	Maintenance/Service	Maintenance/Service	Maintenance/Service	Maintenance/Service
date:				
by:				

	Maintenance/Service	Maintenance/Service	Maintenance/Service	Maintenance/Service
date:				
by:				

Parts List

Model No.	Serial No.
MSCA20S2D3CMW	N□□□□C□□□□

Ordering Parts:
Please provide Serial Number when ordering replacement parts. Order replacement components from your distributor.

Parts

0001 Leveling Feet
0002 Nameplate
0003 Top Panel
0004 Sensor well sealing plug
0005 Installation set
0006 Carry Strap
0007 Set Cover hood small
0008 Plug
0009 Sensor Mounting Hardware
0010 Inst/Oper/Svc Instr

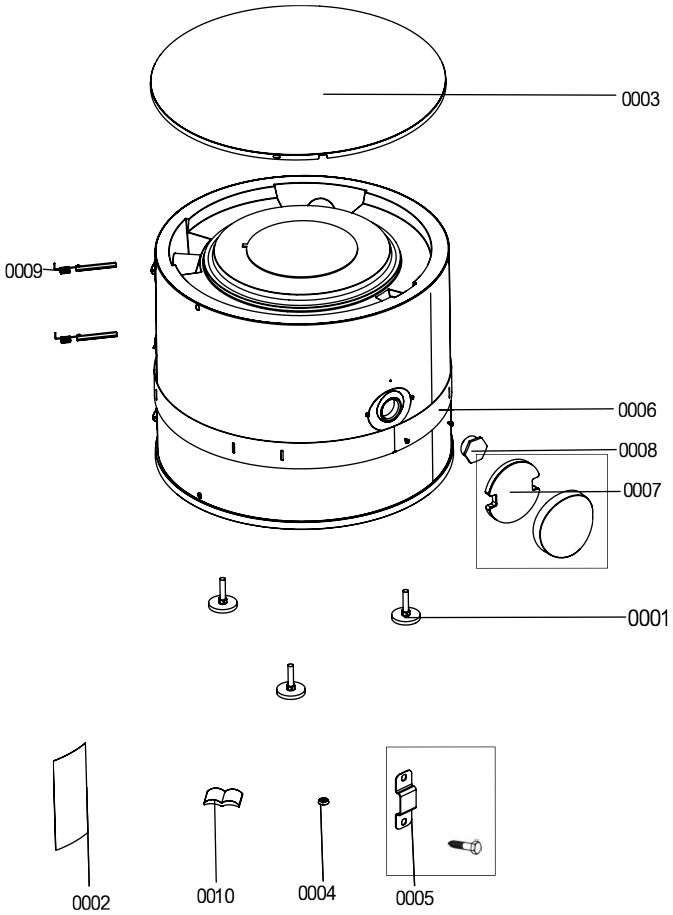

Technical Data

MSCA20S2D3CMW

Buffer Tank Capacity	USG (l)	20 (75)
Standby heat loss qB,S at 45K (81°F) temperature differential	kWh/24hr	0.83
Height	in. (mm)	21 (533)
Width	in. (mm)	26-¾ (675)
Length	in. (mm)	26-½ (668)
Weight	lbs. (kg)	110 (50)
Minimum Water Temperature	°F (°C)	45 (7)
Maximum Water Temperature	°F (°C)	230 (110)
Maximum Tank Working Pressure	PSI (kPa)	45 (310)
Test Pressure	PSI (kPa)	70 (480)

Printed on environmentally friendly (recycled and recyclable) paper.

©2025 Carrier Corp. All rights resevered

Edition Date: 05/25

Catalog No: 6217620 - 02

A Proud Member of the Carrier Family

Replaces: **6217620 - 01**

Manufacturer reserves the right to change, at any time, specifications and designs without notice and without obligations.

6217620 - 02