Installation, Service and Operating Instructions

Air to Water Monobloc Outdoor Unit
Space-heating Water Heater Indoor Unit

Outdoor Unit Models 33NM3AW0200281A3, 33NM3AW0340431A3, 33NM3AW0510781A3
Indoor Unit Models 33NM0AW020028, 33NM0AW034043, 33NM0AW051078

NOTES:
Read the entire instruction manual before starting the installation.

Images are for illustration purposes only. Actual models may differ slightly.

Specifications subject to change without notice

About these Instructions

⚠ **Take note of all symbols and notations intended to draw attention to potential hazards or important product information. These include "WARNING", "CAUTION", and "IMPORTANT". See below.**

⚠ WARNING

Indicates an imminently hazardous situation which, if not avoided, could result in death, serious injury or substantial product/property damage.

▶*Warnings draw your attention to the presence of potential hazards or important product information.*

⚠ CAUTION

Indicates an imminently hazardous situation which, if not avoided, may result in minor injury or product/property damage.

▶*Cautions draw your attention to the presence of potential hazards or important product information.*

IMPORTANT

▶*Helpful hints for installation, operation or maintenance which pertain to the product.*

▶

▶*This symbol indicates that additional, pertinent Information is to be found.*

▶*This symbol indicates that This symbol indicates that other instructions must be referenced.*

Safety, Installation and Warranty Requirements

Please ensure that these instructions are read and understood before commencing installation. Failure to comply with the instructions listed below and details printed in this manual can cause product/property damage, severe personal injury, and/or loss of life. Ensure all requirements below are understood and fulfilled (including detailed information found in manual subsections).

- **Product documentation**

  Read all applicable documentation before commencing installation. Store documentation near heat pump in a readily accessible location for reference in the future by service personnel.

▶ *For a listing of applicable literature, please see section entitled "Important Regulatory and Safety Requirements".*

- **Advice to owner**

  Once the installation work is complete, the contractor must familiarize the system operator/ ultimate owner with all equipment, as well as safety precautions/requirements, shutdown procedure, and the need for professional service annually.

- **Licensed professional contractor**

  The installation, adjustment, service and maintenance of this equipment must be performed by a licensed professional contractor.

▶ *Please see section entitled "Important Regulatory and Installation Requirements".*

- **Warranty**

Information contained in this and related product documentation must be read and followed. Failure to do so renders the warranty null and void.

Safety, Installation and Warranty Requirements

Fiberglass wool and ceramic fiber materials

⚠ WARNING

Inhaling of fiberglass wool and/or ceramic fiber materials is a possible cancer hazard. These materials can also cause respiratory, skin and eye irritation.

The state of California has listed the airborne fibers of these materials as a possible cancer hazard through inhalation. When handling these materials, special care must be applied.

Suppliers of ceramic fiber products recommend the following first aid measures:

- Respiratory tract (nose and throat) irritation: If respiratory tract irritation develops, move the person to a dust free location.
- Eye irritation: If eyes become irritated, flush Immediately with large amounts of lukewarm water for at least 15 minutes. Eyelids should be held away from the eyeball to ensure thorough rinsing. Do not rub eyes.
- Skin irritation: If skin becomes irritated, remove soiled clothing. Do not rub or scratch exposed skin. Wash area of contact thoroughly with soap and cold water (as warm or hot water may worsen the irritation). Using a skin cream or lotion after washing may be helpful.
- Gastrointestinal irritation: If gastrointestinal tract irritation develops, move the person to a dust free environment.

Suppliers of fiberglass wool products recommend the following precautions be taken when handling these materials:

- Avoid breathing fiberglass dust and contact with skin and eyes.
- Use NIOSH approved dust/mist respirator.
- Wear long-sleeved, loose fitting clothing, gloves and eye protection.
- Wash work clothes separately from other clothing. Rinse washer thoroughly.
- Operations such as sawing, blowing, tear-out and spraying may generate airborne fiber concentration requiring additional protection.

First aid measures

- If eye contact occurs, flush eyes with water to remove dust. If symptoms persist, seek medical attention.
- If skin contact occurs, wash affected areas gently with soap and warm water after handling.

Operating and Service Documentation

It is recommended that all product documentation such as parts lists, operating and service instructions be handed over to the system user for storage. Documentation is to be stored near the heat pump in a readily accessible location for reference by service personnel.

Safety, Installation and Warranty Requirements

The outdoor unit contains flammable refrigerant R32. If there is a leak, the escaping refrigerant may form a flammable or explosive atmosphere in the ambient air.

⚠ WARNING

Risk of explosion: Escaping refrigerant may form a flammable or explosive atmosphere in the ambient air.

Take the following measures to prevent fire and explosion:

- Keep ignition sources away, e.g. naked flames, hot surfaces, electrical devices not free of ignition sources, mobile devices with integrated batteries (e.g. mobile phones, fitness watches, etc.).
- Permissible tools: All tools for working must be designed and explosion protected in accordance with the applicable standards and regulations for refrigerant in safety groups A2L and A3, e.g. brushless machines (cordless screwdrivers), extraction equipment, disposal containers, installation aids, vacuum pumps, conductive hoses, mechanical tools of non-sparking material, etc.

Note:
The tools must also be suitable for the pressure ranges in use. Tools must be in good working order.

- Do not use flammable materials, e.g. sprays or other flammable gases.
- Discharge static: Before beginning work, touch earthed objects, such as heating or water pipes.
- Do not remove, block or bridge safety equipment.
- Do not make any changes: Do not modify the outdoor unit, inlet/outlet lines, electrical connections/cables or the surroundings. Do not remove any components or seals.

Working on the system

- Switch off the power supply to the indoor unit and outdoor unit, e.g. at a breaker. Check that the system is no longer live.

Note:
In addition to the control circuit there may be several power circuits.

⚠ WARNING

Contact with live components can result in severe injuries. Some components on PCB's remain live even after the power supply has been switched off. Prior to removing covers from the appliances, wait at least 4 minutes until the voltage has completely dropped out.

⚠ WARNING

- Safeguard the system against reconnection.
- Wear suitable personal protective equipment when carrying out any work.

⚠ WARNING

Hot surfaces and fluids can result in burns or scalding. Cold surfaces may cause frostbite.

- Prior to servicing or maintenance tasks, switch off and allow the equipment to cool down or warm up.
- Do not touch hot or cold surfaces on the appliance, fittings or pipework.

Note:
Electronic assemblies can be damaged by electrostatic discharge. Before beginning work, touch earthed objects, such as heating or water pipes, to discharge any static. R32 refrigerant is an air displacing, colorless, flammable gas which forms explosive mixtures with air. Refrigerant drained must be properly disposed of by authorised contractors. Perform the following measures before beginning work on the refrigerant circuit:

- Check the refrigerant circuit for leaks.
- Ensure very good ventilation especially in the floor area and sustain this for the duration of the work.
- Secure the area surrounding the work area.
- Inform the following persons of the type of work to be carried out:
  – All maintenance personnel
  – All persons in the vicinity of the system.
- Inspect the area immediately around the heat pump for flammable materials and ignition sources: Remove all flammable, movable materials and any ignition sources from the safety zone.
- Before, during and after the work, check the surrounding area for escaping refrigerant using an explosion-proof refrigerant detector suitable for R32. This refrigerant detector must not generate any sparks and must be suitably sealed.
- A CO_2 or powder extinguisher must be to hand in the following cases:
  – Refrigerant is being drained.
  – Refrigerant is being topped up.
  – Soldering or welding work is being carried out.
- Display signs prohibiting smoking.

Safety, Installation and Warranty Requirements

⚠ WARNING

Escaping refrigerant can lead to fire and explosions that result in very serious injuries or death.

- Do not drill or apply heat to a refrigerant circuit filled with refrigerant.
- Do not operate Schrader valves unless a fill valve or extraction equipment is attached.
- Take measures to prevent electrostatic charge.
- No smoking! Prevent naked flames and sparks. Never switch lights or electrical appliances on or off.
- Components that contain or contained refrigerant must be labelled, and stored and transported in well ventilated areas in accordance with the applicable regulations and standards.

⚠ WARNING

Direct contact with liquid and gaseous refrigerant can cause serious damage to health, e.g. frostbite and/or burns. There is a risk of asphyxiation if it is breathed in.

- Prevent direct contact with liquid and gaseous refrigerant.
- Wear personal protective equipment when handling liquid and gaseous refrigerant.
- Never breathe in refrigerant vapors.

⚠ WARNING

Refrigerant is under pressure:
Mechanical loading of lines and components an cause leaks in the refrigerant circuit. Do not apply loads to the lines and components, e.g. by supporting or placing tools.

⚠ WARNING

Hot and cold metallic surfaces of the refrigerant circuit may cause burns or frostbite if skin contact is made. Wear personal protective equipment to protect against burns or frostbite.

Note:
When refrigerant is being removed, hydronic components may freeze. Drain heating water from the heat pump beforehand.

⚠ WARNING

Damage to the refrigerant circuit can cause refrigerant to enter the hydronic system. After completion of the work, vent the hydronic system correctly. When doing so, ensure the area is sufficiently ventilated.

Note:
Freezing can cause damage to the heat pump.

- Thermally insulate all the hydronic lines.
- In order to activate the frost protection function, electrically connect the heat pump before filling the secondary circuit. Switch on the power supply.

⚠ WARNING

With short electrical cables, should there be leakage in the refrigerant circuit, gaseous refrigerant may reach the inside of the building. Min. length of the electrical connecting cables between the indoor and the outdoor unit: 3 m

Note:
Repairing components that fulfil a safety function can compromise the safe operation of the system.

- Replace faulty components only with genuine spare parts.
- Do not undertake any repairs on the inverter. Replace the inverter if there is a defect.

Note:
Spare and wearing parts that have not been tested together with the system can compromise its function. Installing non-authorised components and making non-approved modifications or conversions can compromise safety and may invalidate our warranty. For replacements, use only original spare parts.

Safety, Installation and Warranty Requirements

⚠ WARNING

Escaping refrigerant can lead to fire and explosions that result in very serious injuries or death.

- Ensure very good ventilation especially in the floor area of the outdoor unit.
- No smoking! Prevent naked flames and sparks. Never switch lights or electrical appliances on or off.
- Evacuate any people from the danger zone.
- From a safe position, switch off the electricity supply for all system components.
- Remove ignition sources
- Let the system user know that no ignition source may be brought into area for the duration of the repair.
- Repair work must be carried out by an authorised contractor.
- Only recommission the system after it has been repaired.

⚠ WARNING

Direct contact with liquid and gaseous refrigerant can cause serious damage to health, e.g. frostbite and/or burns. Prevent direct contact with liquid and gaseous refrigerant.

⚠ WARNING

Breathing in refrigerant may cause suffocation. Never breathe in refrigerant vapors.

⚠ WARNING

If water escapes from the appliance there is a risk of electric shock. Switch off the heating system at the external isolator (e.g. fuse box, domestic distribution board).

⚠ WARNING

If water escapes from the appliance, there is a risk of scalding. Never touch hot heating water.

Note:
A build-up of ice in the condensate pan and in the fan area of the outdoor unit can cause damage to the equipment.
Please note the following:

- Do not use mechanical items/aids for the removal of ice.
- Before using electrical heating appliances, check the refrigerant circuit for leaks with a suitable measuring device.
- The heating appliance should not be a source of ignition.
- If ice regularly builds up on the outdoor unit (e.g. in areas where frost and heavy fog occur frequently), install fan ring heating (accessories) that is suitable for refrigerant R32 and/or an electric ribbon heater in the condensate pan (accessories or factory-fitted).
- The outdoor unit is charged at the factory with refrigerant R32.

⚠ WARNING

Escaping refrigerant can lead to fire and explosions that result in very serious injuries or death. There is a risk of asphyxiation if it is breathed in.

Store the outdoor unit in the following conditions:

- An explosion prevention plan must be in place for storage.
- Ensure there is sufficient ventilation at the storage location.
- Temperature range for storage: -13°F to 158°F (–25°C to 70°C)
- Only store the outdoor unit in its factory protective packaging.
- Protect the outdoor unit against damage.
- The maximum number of outdoor units that may be stored in one place is determined by local conditions.

Safety, Installation and Warranty Requirements

Qualification of workers

Every working procedure like maintenance, service and repair operations that affects safety means shall only be carried out by competent persons.

Examples for such working procedures are:

- Breaking into the refrigerating circuit;
- Opening of sealed components;
- Opening of ventilated enclosures.

Checks to the area

Prior to beginning work on systems containing FLAMMABLE REFRIGERANTS, safety checks are necessary to ensure that the risk of ignition is minimized.

Work procedure

Work shall be undertaken under a controlled procedure so as to minimise the risk of a flammable gas or vapor being present while the work is being performed.

General work area

All maintenance staff and others working in the local area shall be instructed on the nature of work being carried out. Work in confined spaces shall be avoided.

Checking for presence of refrigerant

The area shall be checked with an appropriate refrigerant detector prior to and during work, to ensure the technician is aware of potentially toxic or flammable atmospheres. Ensure that the leak detection equipment being used is suitable for use with all applicable refrigerants, i. e. non-sparking, adequately sealed or intrinsically safe.

Presence of fire extinguisher

If any hot work is to be conducted on the refrigerating equipment or any associated parts, appropriate fire extinguishing equipment shall be available to hand. Have a dry powder or CO_2 fire extinguisher adjacent to the charging area

No ignition sources

No person carrying out work in relation to a REFRIGERATING SYSTEM which involves exposing any pipe work shall use any sources of ignition in such a manner that it may lead to the risk of fire or explosion. All possible ignition sources, including cigarette smoking, should be kept sufficiently far away from the site of installation, repairing, removing and disposal, during which refrigerant can possibly be released to the surrounding space. Prior to work taking place, the area around the equipment is to be surveyed to make sure that there are no flammable hazards or ignition risks. “No Smoking” signs shall be displayed.

Ventilated area

Ensure that the area is in the open or that it is adequately ventilated before breaking into the system or conducting any hot work. A degree of ventilation shall continue during the period that the work is carried out. The ventilation should safely disperse any released refrigerant and preferably expel it externally into the atmosphere.

Safety, Installation and Warranty Requirements

Checks to the refrigerating equipment

Where electrical components are being changed, they shall be fit for the purpose and to the correct specification. At all times the manufacturer's maintenance and service guidelines shall be followed. If in doubt, consult the manufacturer's technical department for assistance.
The following checks shall be applied to installations using FLAMMABLE REFRIGERANTS:

- The actual REFRIGERANT CHARGE is in accordance with the room size within which the refrigerant containing parts are installed;
- The ventilation machinery and outlets are operating adequately and are not obstructed;
- If an indirect refrigerating circuit is being used, the secondary circuit shall be checked for the presence of refrigerant
- Marking to the equipment continues to be visible and legible. Markings and signs that are illegible shall be corrected;
- Refrigerating pipe or components are installed in a position where they are unlikely to be exposed to any substance which may corrode refrigerant containing components, unless the components are constructed of materials which are inherently resistant to being corroded or are suitably protected against being so corroded.

Checks to electrical devices

Repair and maintenance to electrical components shall include initial safety checks and component inspection procedures. If a fault exists that could compromise safety, then no electrical supply shall be connected to the circuit until it is satisfactorily dealt with. If the fault cannot be corrected immediately but it is necessary to continue operation, an adequate temporary solution shall be used. This shall be reported to the owner of the equipment so all parties are advised. Initial safety checks shall include:

- That capacitors are discharged: this shall be done in a safe manner to avoid possibility of sparking;
- That no live electrical components and wiring are exposed while charging, recovering or purging the system;
- That there is continuity of earth bonding.

Repairs to sealed components

Sealed electrical components shall be replaced.

Repair to intrinsically safe components

Intrinsically safe components must be replaced.

Cabling

Check that cabling will not be subject to wear, corrosion, excessive pressure, vibration, sharp edges or any other adverse environmental effects. The check shall also take into account the effects of aging or continual vibration from sources such as compressors or fans.

Detection of flammable refrigerants

Under no circumstances shall potential sources of ignition be used in the searching for or detection of refrigerant leaks. A halide torch (or any other detector using a naked flame) shall not be used.

The following leak detection methods are deemed acceptable for all refrigerant systems.

Electronic leak detectors may be used to detect refrigerant leaks but, in the case of FLAMMABLE REFRIGERANTS, the sensitivity may not be adequate, or may need re-calibration. (Detection equipment shall be calibrated in a refrigerant-free area.) Ensure that the detector is not a potential source of ignition and is suitable for the refrigerant used. Leak detection equipment shall be set at a percentage of the LFL of the refrigerant and shall be calibrated to the refrigerant employed, and the appropriate percentage of gas (25 % maximum) is confirmed.

Leak detection fluids are also suitable for use with most refrigerants but the use of detergents containing chlorine shall be avoided as the chlorine may react with the refrigerant and corrode the copper pipe-work.

If a leak is suspected, all naked flames shall be removed/extinguished.

If a leakage of refrigerant is found which requires brazing, all of the refrigerant shall be recovered from the system, or isolated (by means of shut off valves) in a part of the system remote from the leak. Removal of refrigerant shall be according to Removal and evacuation.

Safety, Installation and Warranty Requirements

Removal and evacuation

When breaking into the refrigerant circuit to make repairs – or for any other purpose –conventional procedures shall be used. However, for flammable refrigerants it is important that best practice be followed, since flammability is a consideration. The following procedure shall be adhered to:

- Safely remove refrigerant following local and national regulations;
- Evacuate;
- Purge the circuit with inert gas (optional for A2L);
- Evacuate (optional for A2L);
- Continuously flush or purge with inert gas when using flame to open circuit; and
- Open the circuit.

The refrigerant charge shall be recovered into the correct recovery cylinders if venting is not allowed by local and national codes. For appliances containing flammable refrigerants, the system shall be purged with oxygen-free nitrogen to render the appliance safe for flammable refrigerants. This process might need to be repeated several times. Compressed air or oxygen shall not be used for purging refrigerant systems.

For appliances containing flammable refrigerants purging shall be achieved by breaking the vacuum in the system with oxygen-free nitrogen and continuing to fill until the working pressure is achieved, then venting to atmosphere, and finally pulling down to a vacuum (optional for A2L). This process shall be repeated until no refrigerant is within the system (optional for A2L). When the final oxygen-free nitrogen charge is used, the system shall be vented down to atmospheric pressure to enable work to take place.

The outlet for the vacuum pump shall not be close to any potential ignition sources, and ventilation shall be available.

Charging procedures

In addition to conventional charging procedures, the following requirements shall be followed.

- Ensure that contamination of different refrigerants does not occur when using charging equipment. Hoses or lines shall be as short as possible to minimise the amount of refrigerant contained in them.
- Cylinders shall be kept in an appropriate position according to the instructions.
- Ensure that the REFRIGERATING SYSTEM is earthed prior to charging the system with refrigerant
- Label the system when charging is complete (if not already).
- Extreme care shall be taken not to overfill the REFRIGERATING SYSTEM.

Prior to recharging the system, it shall be pressure-tested with the appropriate purging gas. The system shall be leak-tested on completion of charging but prior to commissioning. A follow up leak test shall be carried out prior to leaving the site.

Safety, Installation and Warranty Requirements

Decommissioning

Before carrying out this procedure, it is essential that the technician is completely familiar with the equipment and all its detail. It is recommended good practice that all refrigerants are recovered safely. Prior to the task being carried out, an oil and refrigerant sample shall be taken in case analysis is required prior to re-use of recovered refrigerant. It is essential that electrical power is available before the task is commenced.

a) Become familiar with the equipment and its operation.
b) Isolate system electrically.
c) Before attempting the procedure, ensure that:
   - mechanical handling equipment is available, if required, for handling refrigerant cylinders;
   - all personal protective equipment is available and being used correctly;
   - the recovery process is supervised at all times by a competent person; recovery equipment and cylinders conform to the appropriate standards.
d) Pump down refrigerant system, if possible.
e) If a vacuum is not possible, make a manifold so that refrigerant can be removed from various parts of the system.
f) Make sure that cylinder is situated on the scales before recovery takes place.
g) Start the recovery machine and operate in accordance with instructions.
h) Do not overfill cylinders (no more than 80 % volume liquid charge).
i) Do not exceed the maximum working pressure of the cylinder, even temporarily.
j) When the cylinders have been filled correctly and the process completed, make sure that the cylinders and the equipment are removed from site promptly and all isolation valves on the equipment are closed off.
k) Recovered refrigerant shall not be charged into another REFRIGERATING SYSTEM unless it has been cleaned and checked

Labelling

Equipment shall be labelled stating that it has been de-commissioned and emptied of refrigerant. The label shall be dated and signed. For appliances containing FLAMMABLE REFRIGERANTS, ensure that there are labels on the equipment stating the equipment contains FLAMMABLE REFRIGERANT.

Recovery

When removing refrigerant from a system, either for servicing or decommissioning, it is recommended good practice that all refrigerants are removed safely.

When transferring refrigerant into cylinders, ensure that only appropriate refrigerant recovery cylinders are employed. Ensure that the correct number of cylinders for holding the total system charge is available. All cylinders to be used are designated for the recovered refrigerant and labelled for that refrigerant (i. e. special cylinders for the recovery of refrigerant). Cylinders shall be complete with pressure-relief valve and associated shut-off valves in good working order. Empty recovery cylinders are evacuated and, if possible, cooled before recovery occurs.

The recovery equipment shall be in good working order with a set of instructions concerning the equipment that is at hand and shall be suitable for the recovery of the flammable refrigerant. If in doubt, the manufacturer should be consulted. In addition, a set of calibrated weighing scales shall be available and in good working order. Hoses shall be complete with leak-free disconnect couplings and in good condition.

The recovered refrigerant shall be processed according to local legislation in the correct recovery cylinder, and the relevant waste transfer note arranged. Do not mix refrigerants in recovery units and especially not in cylinders.

If compressors or compressor oils are to be removed, ensure that they have been evacuated to an acceptable level to make certain that flammable refrigerant does not remain within the lubricant. The compressor body shall not be heated by an open flame or other ignition sources to accelerate this process. When oil is drained from a system, it shall be carried out safely.

Index

Safety

About these Instructions 2
Safety, Installation and Warranty Requirements 3

Table of Contents

Index 12

General Information

Important Regulatory and Installation Requirements 14
Mechanical Room 14
Applicability 15
Product Information 16
Intended Use 18
System Examples 18
Fittings and Sealing Points 18
Prior to Installation 18

Indoor Unit Installation

Dimensions 19
Recommended Minimum Service Clearances 20
Mounting the Indoor Unit 20
Accessing the Indoor Unit 21
Piping Connections 22
Domestic Hot Water 23
Safety Valve 24
Installation Fittings 25
Electrical Connections 26
Auto Changeover Relay Mounting 29
Auto Changeover Wiring 30
Power Supply Indoor Unit 31

Outdoor Unit Installation

Dimensions 32
Recommended Minimum Service Clearances 34
Outdoor Unit Sound Pressure 36
Prior to Installation 37
Mounting on a Concrete Pad 38
Mounting using a Mounting Curb 39
Mounting on Stand 40
Safety Valve 41
Piping Connections 42
Accessing the Outdoor Unit 43
Power Supply Outdoor Unit 44
Communication 45

Installation Examples

Installation Examples 46
System Example 1 47
System Example 2 48

Index

Operating

User Interface 49
Display Symbols and Indications 50
Initial Start-up 51
Diagnostics Menu 51
Settings Menu 51
Setting the Room Temperature 52
Setting the DHW Temperature 52
Setting a Time Schedule 53
DHW Tank Hygiene Function 56
Setting Time and Date 57
Adjusting the Interface 57
Setting the Language 58
System Information 58
Time Schedule Override 59
Service/Configuration Menu 60
Adjusting the Heating Curve 65

Service

Troubleshooting 67
Fault Codes Indoor Unit 69
Fault Codes Outdoor Unit 69
Preparing for Service 85
Check Sensors 86
Checking Fuses 87
Maintenance 88

Wiring

Indoor Unit Wiring Diagram 92
Outdoor Unit Wiring Diagram 94

Parts

Parts List 97

Technical Data

Indoor Unit Technical Data 108
Outdoor Unit Technical Data 109

Water Quality

Filling the System 110

Important Regulatory and Installation Requirements

Codes

In Canada all electrical wiring is to be done in accordance with the latest edition of CSA C22.1 Part 1 and/or local codes. In the U.S., use the National Electrical Code ANSI/NFPA 70.

Instructing the system user

The installer of the system is responsible to ensure the system operator/ultimate owner is made familiar with the system functioning, its activation, and its shut-down.

Initial start-up

Initial start-up must be performed by a qualified contractor. Proper completion of the Maintenance Record by the heating contractor is also required.

Working on the equipment

The installation, adjustment, service, and maintenance of this heat pump must be done by a licensed professional contractor who is qualified and experienced in the installation, service, and maintenance of heat pumps. There are no user serviceable parts on the heat pump.
Ensure main power supply to equipment, the heat pump system, and all external controls has been deactivated. Take precautions in all instances to avoid accidental activation of power during service work.

Technical literature

Leave all literature at the installation site and advise the system operator/ultimate owner where the literature can be found.

This product comes with several safety instruction labels attached. Do not remove!

Literature:

- Technical Data Manual
- Installation, Service and Operating Instructions
- Instructions of other products utilized and installed
- Installation codes mentioned in this manual and as locally applicable

The completeness and functionality of field supplied electrical controls and components must be verified by the heating contractor. These include flow switches (if used), staging controls, pumps, motorized valves, air vents, thermostats, etc.

Mechanical Room

During the early stages of designing a new home, we recommend that proper consideration be given to constructing a separate mechanical room dedicated to the heat pump equipment and domestic hot water storage tank(s).

The indoor unit must be located in a heated indoor area, near a floor drain. Whenever possible, install the unit near an outside wall so that it is easy to connect the indoor unit to the outdoor unit. Locate the indoor unit on a wall capable of supporting 100 lb. (45 kg) [the weight of the indoor unit].

The maximum room temperature of the mechanical room where the indoor unit is located must not exceed 95°F (35°C).

Applicability

⚠ CAUTION

The serial number must be provided when ordering replacement parts. Some replacement parts are not reverse compatible with previous versions.

IMPORTANT

When ordering replacement parts, provide the 10-digit serial number which is found on either the indoor unit rating plate or outdoor unit rating plate.

Indoor Unit:

Model No.	Serial No.
33NM0AW020028	□□□□NB□□□□
33NM0AW034043	□□□□NB□□□□
33NM0AW051078	□□□□NB□□□□

Outdoor Unit:

Model No.	Serial No.
33NM3AW0200281A3	□□□□NA□□□□
33NM3AW0340431A3	□□□□NA□□□□
33NM3AW0510781A3	□□□□NA□□□□

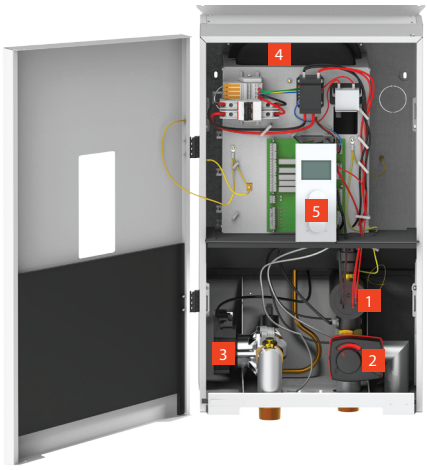

Product may not be exactly as shown

1. Integrated resistive heating element
2. Integrated Space Heating/DHW Production diverting valve
3. Integrated system pump
4. Integrated system expansion tank
5. Monochrome digital interface

Certifications

Indoor Unit

UL CERTIFIED SAFETY US-CA SÛRETÉ US-CA E548027 Space-Heating Water Heater

Outdoor Unit

ETL LISTED C US Intertek

AHRI CERTIFIED® www.ahridirectory.org Air-Cooled Water Chilling Packages AHRI Standards 550/590 and 551/591

Product may not be exactly as shown

1. Coil
2. Fan
3. Compressor
4. Brazed plate heat exchanger

Product Information

The unit is designed for heating/cooling of a building and heating domestic hot water. The unit consists of two modules:

Outdoor Unit

The working principle of the unit is to capture heat from the environment and to transfer it to the heating circuit in the building. The low-temperature heat of the air is transferred through an evaporator to the heat pump system filled with a refrigerant, which turns into a gas as it evaporates. From the evaporator, the gas is drawn in by the compressor, which raises its temperature during its compression and directs it to the condenser. In the condenser, heat is transferred to the water, which fills the central heating system, and the cooled liquid flows through the expansion valve and returns to the evaporator, after which the whole process starts again. In the case of cooling, this cycle is reversed and the heat is extracted from the building and discharged outside.

Refrigeration circuit

All the components of the refrigeration circuit are located in the outdoor module, including the refrigeration circuit controller with an electronic expansion valve. Depending on the operating conditions, the compressor power is adjusted by means of an inverter. When the space cooling function is activated, the refrigeration circuit is reversed.

Plumbing system

The indoor and outdoor modules are connected to each other via heating medium hydronic lines. A high-efficiency circulation pump (secondary pump) built into the indoor module supplies the heating medium to the secondary circuit. A central 3-way diverter valve: “space heating/DHW heating” is responsible for switching between space heating and DHW heating.

Heat pump controller

The entire heating system is monitored and controlled by the heat pump controller. The heat pump controller is integrated into the indoor module. Communication between the indoor and outdoor modules takes place via a communication bus.

Indoor Unit

The working principle of the unit is based on the demand-dependent capacity control of the heat pump compressor with an activation of the electrical auxiliary heater via the controller of the indoor module. The indoor module controller regulates the heating output according to a pre-set heating curve. If the heat pump is not able to cover the building’s heating demand on its own, the controller automatically activates the electrical auxiliary heater which, together with the heat pump produces the desired heating medium temperature.

Outdoor temperature ranges for air-to-water heat pumps

Air-to-water heat pumps use the outdoor air as the heat source. Operation is only efficient within certain outdoor temperature ranges, e.g. between -13°F and 113°F (-25°C and +43°C). If the upper temperature limit is exceeded or the lower temperature limit has been reached, heat pumps switch off periodically. A corresponding notification appears on the heat pump controller. To cover the heat demand for space heating and DHW heating beyond the temperature limits, the heat pump controller automatically switches on the available auxiliary heating equipment, e.g. electric auxiliary heating, if necessary.

Required equipment

A communication bus cable between the outdoor unit and the indoor unit, use a two-wire twisted pair, shielded 22 AWG cable for communication between the indoor and outdoor unit.

Installation with heating/cooling buffer storage tank

- Space heating
The heat pump may heat up to 2 heating/cooling circuits: 1 heating/cooling circuit without a mixing valve and 1 heating/cooling circuit with a mixing valve.
- Space cooling
The heat pump may cool via up to 2 heating/cooling circuits.

Product Information

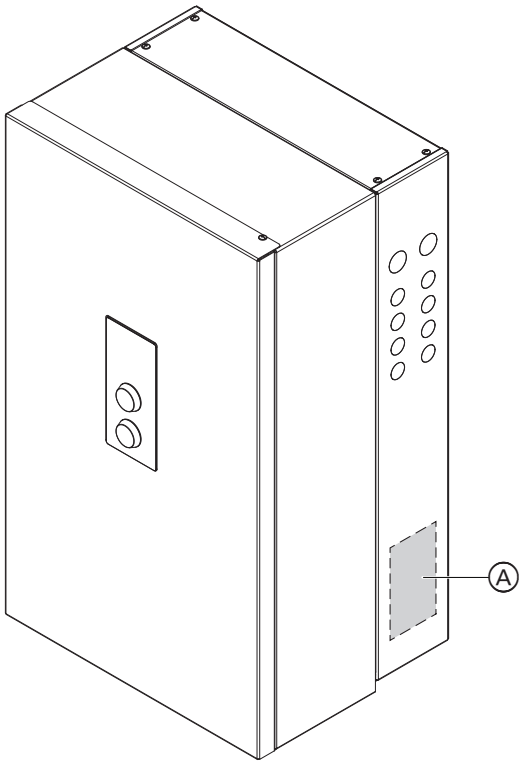

Ⓐ Rating plate for indoor unit registration

Wall mounted indoor unit in combination with air to water outdoor unit heat pump, with the following integrated components:

- Heating or cooling operation
- Hydronics with 3-way diverter valve and variable speed high efficiency circulation pump
- Weather-compensated or constant temperature control unit
- DHW production

Heat pump model must be selected based on an accurate heat loss calculation of the building. Ensure heat pump model is compatible with connected heating/cooling loads.

The rating plate contains extensive product information and is heat pump-specific. Access code with the marking “i” for direct access to product-specific information and product registration on the internet. The access code contains the credentials for the registration and product information portal, as well as the 10-digit serial number.

Intended Use

The indoor and outdoor unit is only intended to be installed and operated in sealed unvented hydronic systems with due attention paid to the associated installation, service and operating instructions. The heat pump is only designed for:

- Space Heating
- Space Cooling
- DHW Heating

Commercial or industrial use for a purpose other than the heating of heating water shall be deemed inappropriate.

Intended use presupposes that a permanent installation in conjunction with permissible components designed for this purpose has been carried out. All other use is deemed inappropriate. Any resulting losses are excluded from the manufacturer's liability. Any usage beyond this must be approved by the manufacturer in each individual case. Intended use also includes adherence to maintenance and inspection intervals.

System Examples

System examples with hydronic and electrical connection schemes and function descriptions are available to help setting up the heating system, refer to "Installation Examples" on page 46.

Fittings and Sealing Points

All connections must be fitted with new gaskets/ seals after opening or loosening.

⚠ WARNING

Risk of electric shock from escaping heating water or DHW. When commissioning and after carrying out maintenance work, check all water side connections for leaks.

Prior to Installation

Before placing the indoor unit in its installation location, ensure all necessary accessories are installed.

⚠ CAUTION

The indoor unit must be installed in such a way that the system components are protected from water (spraying, splashing, etc.) during operation and service.

Dimensions

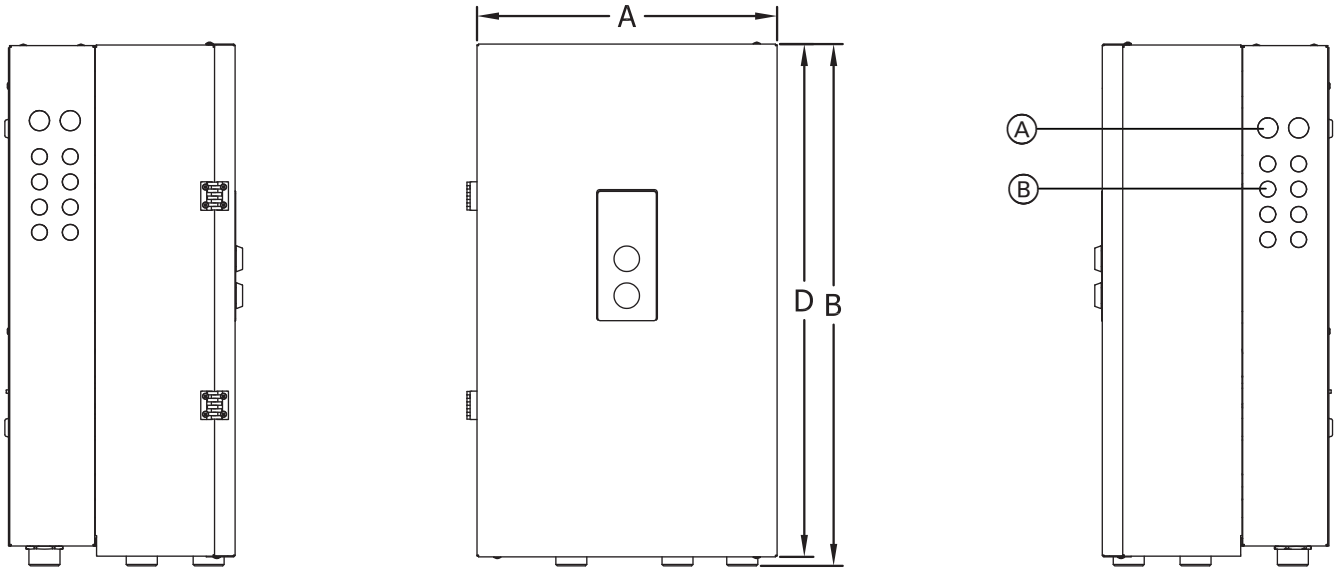

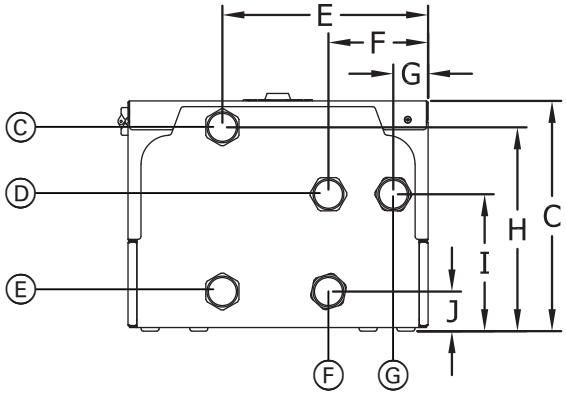

Dimensions in. (mm)

A	16-¼ (416)	F	5-½ (138)
B	28-½ (723)	G	2 (48)
C	12-¾ (323)	H	11-¼ (283)
D	28-¼ (717)	I	7-½ (190)
E	11-¼ (285)	J	2-¼ (55)

Legend

- Ⓐ ¾ in. Electrical Knockouts (2 per side)
- Ⓑ ½ in. Electrical Knockouts (8 per side)
- Ⓒ Return to Heat Pump (1-¼ in. NPT)
- Ⓓ Supply to Space Heating (1-¼ in. NPT)
- Ⓔ DHW/Space Heating Return (1-¼ in. NPT)
- Ⓕ Supply from Heat Pump (1-¼ in. NPT)
- Ⓖ DHW Tank Heating Supply (1-¼ in. NPT)

Recommended Minimum Service Clearances

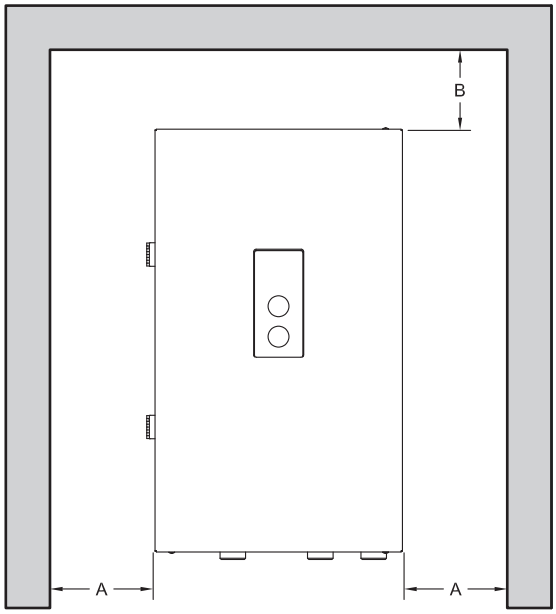

Recommended minimum service clearances

For typical installation, it is recommended to install the indoor unit with the clearances shown in the illustration.

A - 12 in. (300 mm)
B - 20 in. (500 mm)
Front Clearance 39 in. (1000 mm)

These dimensions reflect the recommended service clearance for the indoor unit only, ensure adequate clearance is left for the installation of piping and electrical connections.

Minimum Clearances to Combustibles

Top	Front	Rear	Left	Right
0	0 AL, CL	0	0	0

AL = Alcove
CL = Closet
Floor: Combustible

Mounting the Indoor Unit

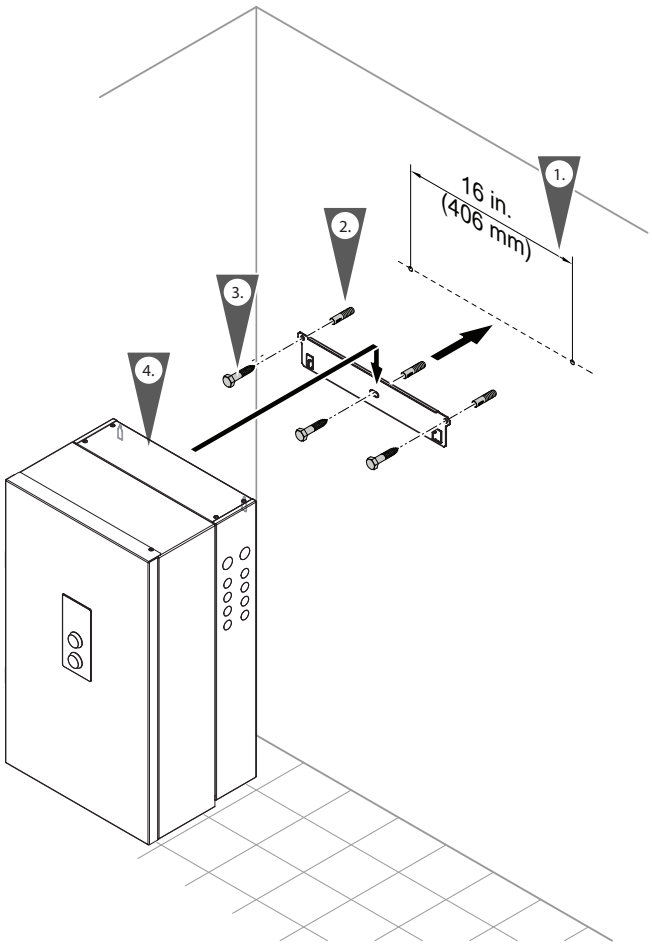

The indoor unit can be wall-mounted on a concrete wall. Note: The enclosed screws and rawl plugs are only suitable for concrete. For other construction materials, use bolts and anchors that are suitable for 100 lb. (46 kg) loads.

Installation of mounting bracket on brick/concrete wall:

1. Mark out the rawl plug holes.
2. Drill holes ∅⅜ in. (∅10 mm) and insert the rawl plugs supplied.
3. Fit the wall mounting bracket with the screws supplied.
4. Mount the indoor unit on the wall mounting bracket. Ensure that both tabs have locked into the indoor unit.

Note: Check the condition of the wall where the indoor unit is to be installed. For the suitability of the supplied rawl plugs for various building materials, see the manufacturer's instructions. For other construction materials, use fixing materials with sufficient load bearing capacity.

⚠ CAUTION

Whichever mounting method is used, ensure that the bracket is tightly and securely fastened to wall. Failure to secure indoor unit properly could cause indoor unit to loosen, posing a severe safety hazard.

Accessing the Indoor Unit

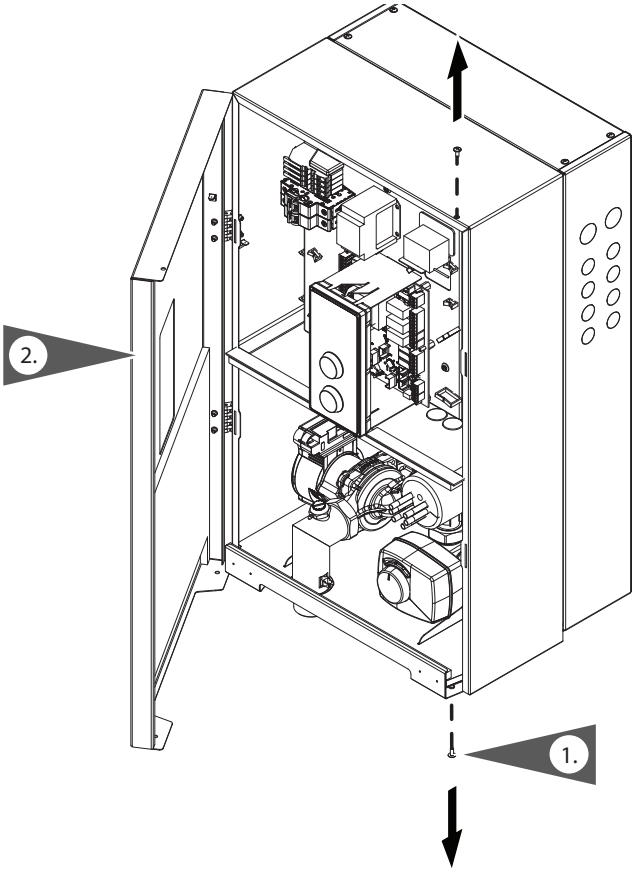

Accessing the Indoor Unit for Installation

1. Remove the two door retaining screws.
2. Swing the door open to the left.

Note: If required the mid jacketing panel can be removed to offer addition clearance for installation, refer to “Preparing for Service” on page 85 for instructions on removing the mid panel.

Piping Connections

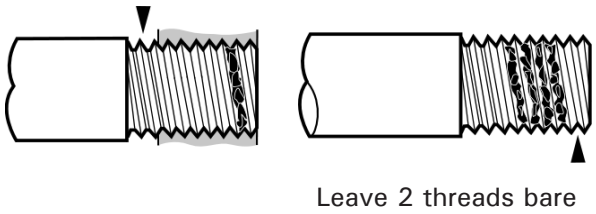

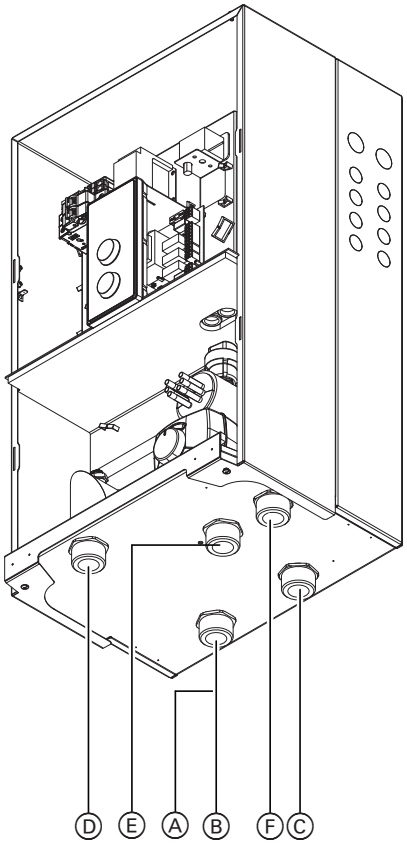

Legend

Ⓐ DHW tank heating return
Ⓑ Heating system return
Ⓒ Supply from the heat pump outdoor unit
Ⓓ Return to the heat pump outdoor unit
Ⓔ Heating system supply
Ⓕ DHW tank heating supply

Note: All fittings shown are field supplied

Note: Install temperature gauge (field supplied) anywhere in the supply piping near the indoor unit (not shown).

Proper piping practice
Support piping by proper suspension method. Piping must not rest on or be supported by indoor unit.

Connections on the heating water and DHW sides
If the connections have not been fitted previously, make the connections on the heating water and DHW sides.

Note: If no tank is connected, close off the DHW tank supply connection with a cap.

Heating water connections

1. Thoroughly flush heating system (particularly before connecting the heat pump to an existing system).
2. Connect indoor unit to the heating system.
   Note: Use an approved pipe sealant or Teflon tape when connecting the installation fittings.

Maximum allowable working pressure (MAWP): 30 psig (2 bar)

⚠ WARNING

Exposing the indoor unit to pressures and temperatures in excess of those listed will result in damages, and will render warranty null and void.

- Use a two-hand wrench method when tightening fittings or piping onto the indoor unit connectors. Use one wrench to prevent the indoor unit pipes from twisting and the second wrench to tighten the fitting or piping. Failure to support the indoor unit connection could damage the heat pump and its internal piping.
- All plumbing must meet or exceed all local state and national plumbing codes.

SUPPORT ALL PIPING USING HANGERS. DO NOT support piping by the indoor unit or its components.

- Use isolation valves to isolate system components.

General
A distance of 2 in. (50 mm) from uninsulated hot water pipes to combustible components must be maintained.
If the pipes are provided with a suitable pipe insulation of sufficient thickness and insulation, the distance mentioned above is not necessary (see also local regulations).

Domestic Hot Water

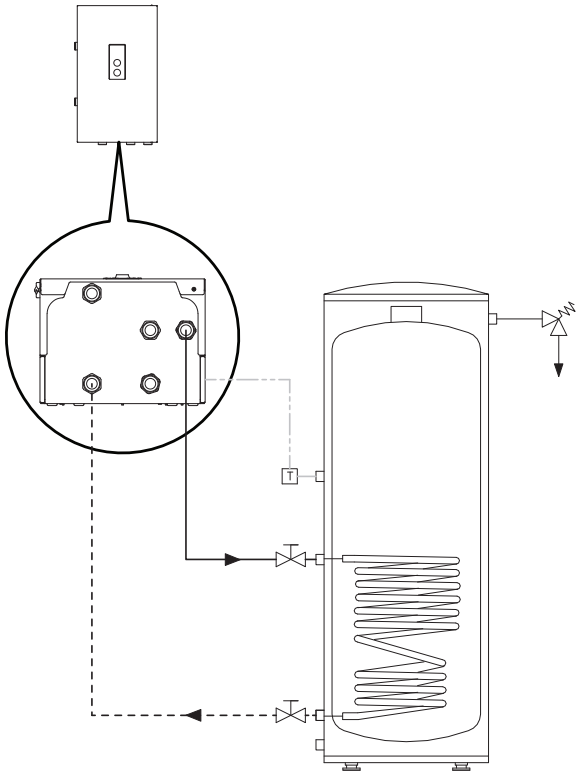

The indoor unit can be used in conjunction with the stand-alone indirect DHW storage tanks.
For the connection of a stand-alone indirect DHW tank, installation fittings (field supplied), and a DHW temperature sensor (supplied with heat pump) is required.

Size and select the indirect DHW storage tank based on the forecasted indirect DHW consumption of the building in question.

For further technical information on indirect DHW storage tanks, see the DHW tank manuals.

If no domestic hot water tank is being connected to the indoor unit, the domestic hot water tank port needs to be capped. In addition to capping the DHW tank port the indoor unit must be configured for operation without domestic hot water tank, refer to "DHW Tank:" on page 62 to adjust the setting in the "Service/Configuration Menu".

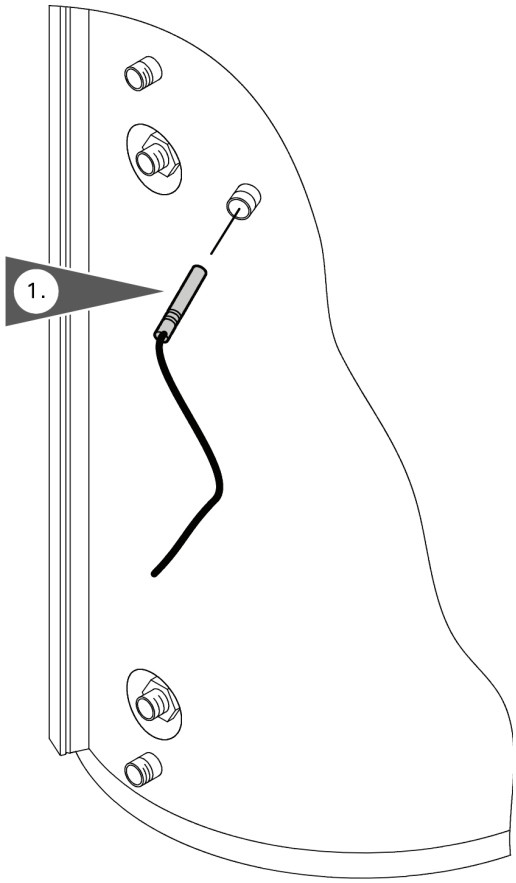

DHW storage tank information
The DHW temperature sensor is required when using a stand-alone DHW storage tank with the heat pump. The heat pump is supplied with a DHW temperature sensor (all other fittings are field supplied).

Making the DHW connections

1. Locate the DHW temperature sensor well and install the DHW temperature sensor using the installation instructions provided with the DHW storage tanks.

⚠ IMPORTANT

Follow the Installation Instructions supplied with the DHW storage tank when mounting and securing DHW tank temperature sensor.

⚠ WARNING

The installer must verify proper operation of the DHW tank temperature sensor with original manufacturer of the tank. It's strongly recommended that the installation of a temperature tempering valve in the DHW supply line.

Safety Valve

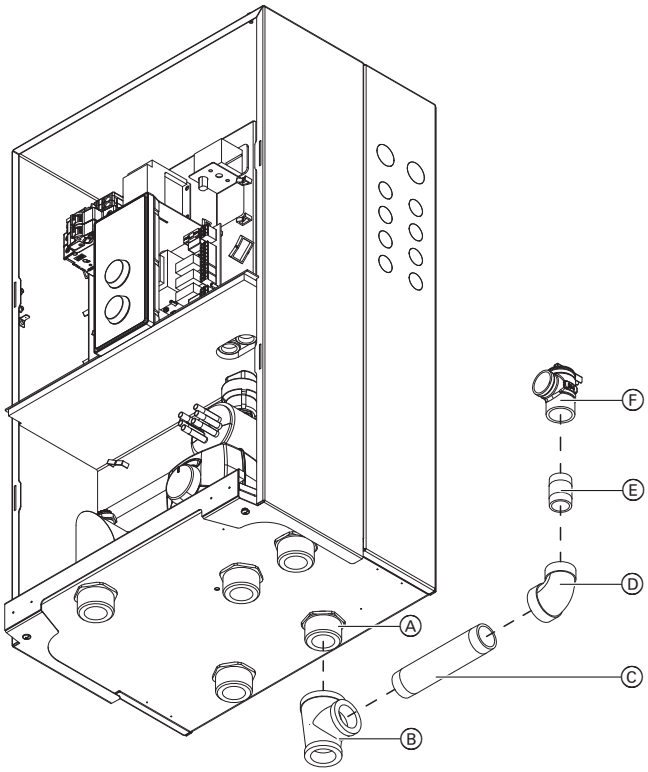

Legend

Ⓐ Supply from Outdoor Unit
Ⓑ 1-¼ X 1 X 1 Inch Brass Reducing Tee
Ⓒ 1 X 6 Inch Long Brass Nipple
Ⓓ 1 X ¾ Inch Brass Reducing Elbow
Ⓔ ¾ Inch Brass Close Nipple
Ⓕ 30 PSI Pressure Relief Valve

Installing the pressure relief valve:

1. Use the supplied fittings to install the pressure relief valve on the Supply from Outdoor Unit Connection of the Indoor Unit refer to "Piping Connections" on page 22.

Minimum connection diameters:
Pressure relief valve..... ¾ in.
Discharge pipe ..... ¾ in.
Maximum operating pressure: 30 PSI (2 bar)
Minimum operating pressure: 8 PSI (0.5 bar)

Installing the discharge pipe:

1. Install discharge pipe on pressure relief valve in such a way that...
   - the end of the pipe is not threaded.
   - the pressure relief discharge pipe extends to a floor drain and ends approximately 6 in. (150 mm) above the drain.

Ensure that...
- there is no shutoff valve installed in the discharge pipe.
- discharge pipe diameter is not reduced.
- discharge is not piped to outdoors.

⚠ IMPORTANT

Install the (approved) factory supplied pressure relief valve. Removal of air from the system must occur via use of air vent(s) in the system supply. To ensure the heat pump can be purged of all air, ensure supply/return water lines do not contain restrictive piping where air could be trapped.

⚠ WARNING

Do not install an isolation valve between heat pump and pressure relief valve. The discharge pipe for the pressure relief valve must be oriented to prevent scalding of attendants. Pipe pressure relief valve discharge pipe close to floor drain. Never pipe discharge pipe to the outdoors.

Installation Fittings

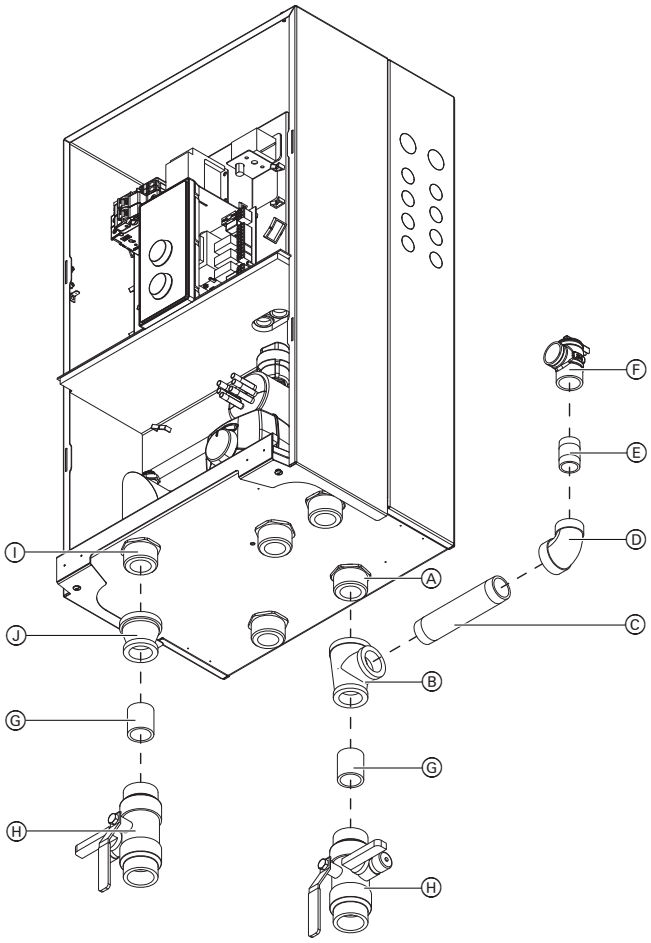

Installation Fittings

The indoor unit is supplied with the installation fittings described.

Legend

Ⓐ Supply from Outdoor Unit
Ⓑ 1-¼ X 1 X 1 Inch Brass Reducing Tee
Ⓒ 1 X 6 Inch Long Brass Nipple
Ⓓ 1 X ¾ Inch Brass Reducing Elbow
Ⓔ ¾ Inch Brass Close Nipple
Ⓕ 30 PSI Pressure Relief Valve
Ⓖ 1 Inch Brass Close Nipple
Ⓗ Drain/Fill/Isolate Ball Valve
Ⓘ Return to Outdoor Unit
Ⓙ 1-¼ X 1 Inch Brass Reducing Coupling

Electrical Connections

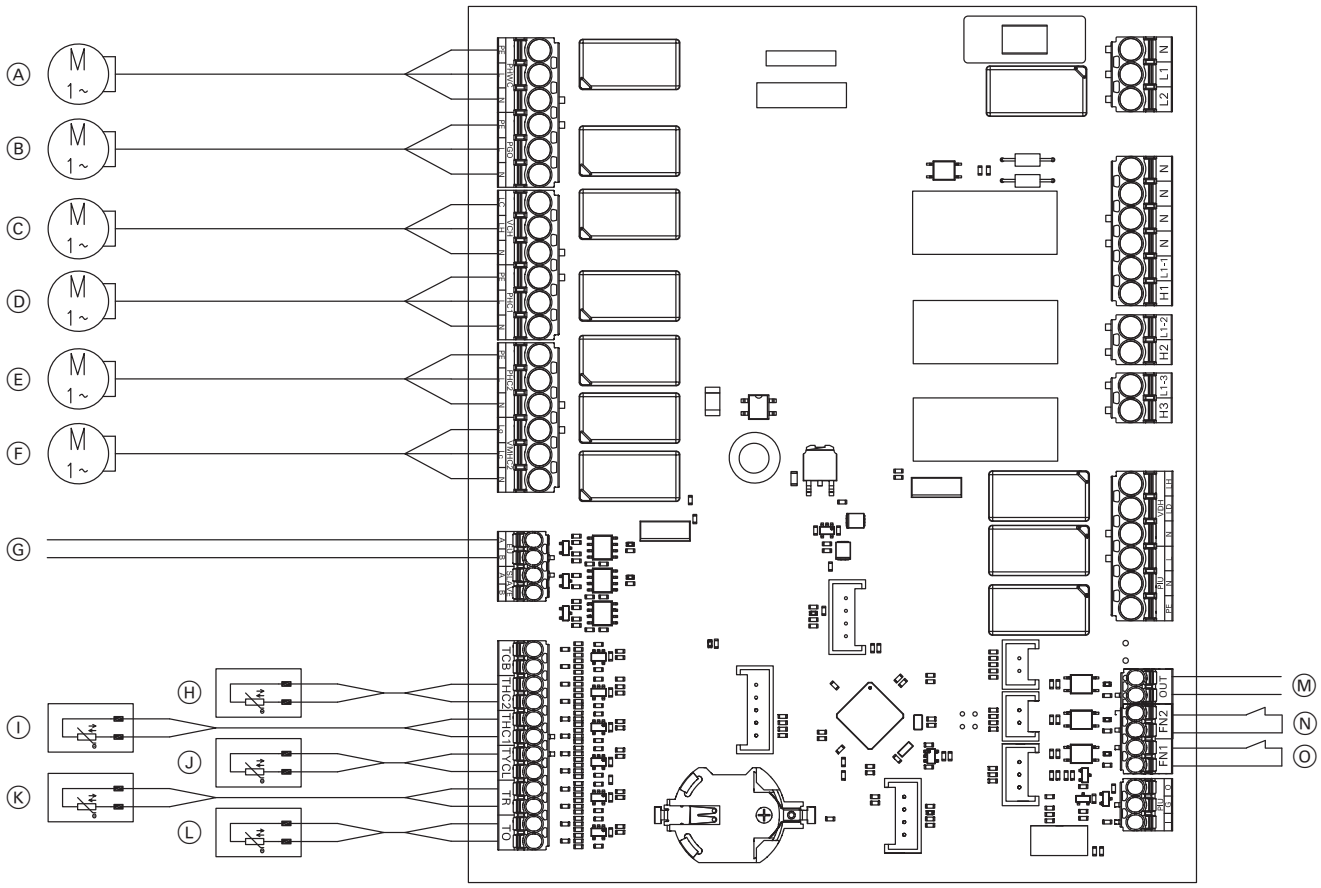

Legend:

Ⓐ DHW Recirculation Pump (PHWC)
Ⓑ Glycol Circuit Pump (PGC)
Ⓒ Cooling/Heating Divertering Valve (VCH)
Ⓓ Heating Circuit 1 Pump (PHC1)
Ⓔ Heating Circuit 2 Pump (PHC2)
Ⓕ Heating Circuit 2 Mixing Valve (VMHC2)
Ⓖ MODBus Communication with ODU (EU)
Ⓗ Heating Circuit 2 Temperature Sensor (THC2)
Ⓘ Heating Circuit 1 Temperature Sensor (THC1)
Ⓙ DHW Tank Temperature Sensor (TCYL)
Ⓚ Room Temperature Sensor (TR)
Ⓛ Outdoor Temperature Sensor (TO)
Ⓜ Backup Heat Activation - Dry Contact (OUT)
Ⓝ Blocking Central Cooling (FN2)*
Ⓞ Blocking Central Heating (FN1)*

*not applicable when configured for Auto Changeover

Note:

-120VAC outputs rated current 2FLA
-Maximum output 5FLA shared between all 120V outputs.

Electrical Connections

Outdoor Temperature Sensor:

Installation location for outdoor temperature sensor

- North or north-westerly wall, 6 - 8 ft. (2 - 2.5 m) above ground level; in multi storey buildings, in the upper half of the second floor
- Not above windows, doors or vents
- Not immediately below balconies or gutters
- Never plaster over

Connect the outdoor temperature sensor using a two wire cable, with a length up to 150 ft. (50 m) and cross-section of 22 AWG (0.34 mm^2).

Room Temperature Sensor:

Installation location for room temperature sensor

- In the main living room on an internal wall
- Distance from floor: Min. 5 ft. (1.5 m)
- Not near windows or doors
- Not above radiators
- Not near heat sources (direct sunlight, fireplace, TV set, etc.)

Connect the room temperature sensor using a two wire cable, with a length up to 150 ft. (50 m) and cross-section of 22 AWG (0.34 mm^2).

Electrical Connections

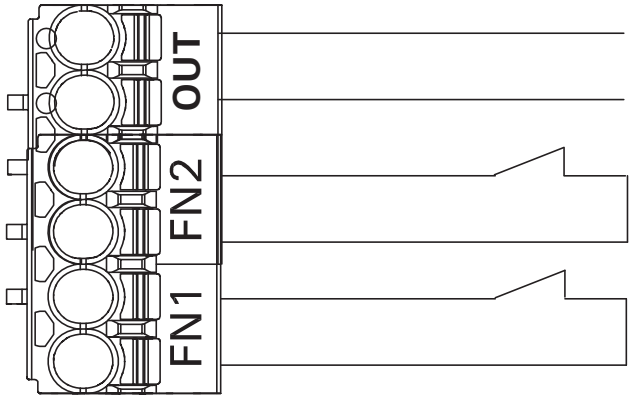

Input FN1:

Input FN1 is supplied with a factory installed jumper across the terminals. The jumper can be replaced with a normally closed dry contact relay. When in heating mode if the relay is in the open position central heating is blocked.

Input FN2:

Cooling is not enabled from factory, refer to "Cooling:" on page 61 to active cooling in the "Service/Configuration Menu".

If cooling has been enabled a field supplied jumper must be installed across the FN2 terminals. The jumper can be replaced with a normally closed dry contact relay. When in cooling mode if the relay is in the open position central cooling is blocked. An optional field supplied humidity switch/sensor can be wired in series with the relay to protect the cooling system from condensation.

OUT:

Dry contact to heat demand of back up boiler.

Auto Changeover Relay Mounting

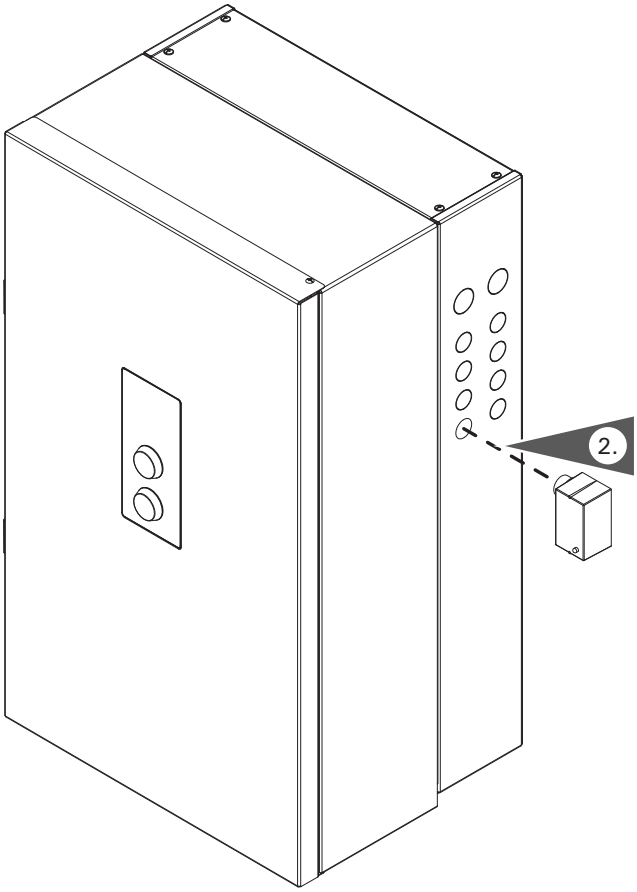

Auto Changeover Function

By default, Auto Changeover is 'OFF'. To activate this feature, navigate to the system settings and enable Auto Changeover. Refer to "Auto Changeover:" on page 62.

The Auto Changeover function enables the indoor unit to automatically switch between heating and cooling modes, in conjunction with an external thermostat, eliminating the need for manual mode selection.

When Auto Changeover is enabled, the mode selector dial will only change operating mode from standby to operation with thermostat control, refer to "User Interface" on page 49. The dial indicator lights will still indicate current operating mode (heating or cooling).

Mounting the Relay

1. Select an available ½ in. electrical knockout.
2. Install the threaded portion of the relay into the knockout, and secure in place with the lock nut provided with the relay.

⚠ IMPORTANT

The Auto Changeover function is intended for use with Air Handling Units and Fan Coils only. If the hydronic system includes a radiant circuit ensure that the radiant circuit is capable of being used for both heating and cooling mode, or if circuit is configured for heating only, disable the circuit during cooling mode.

Auto Changeover Wiring

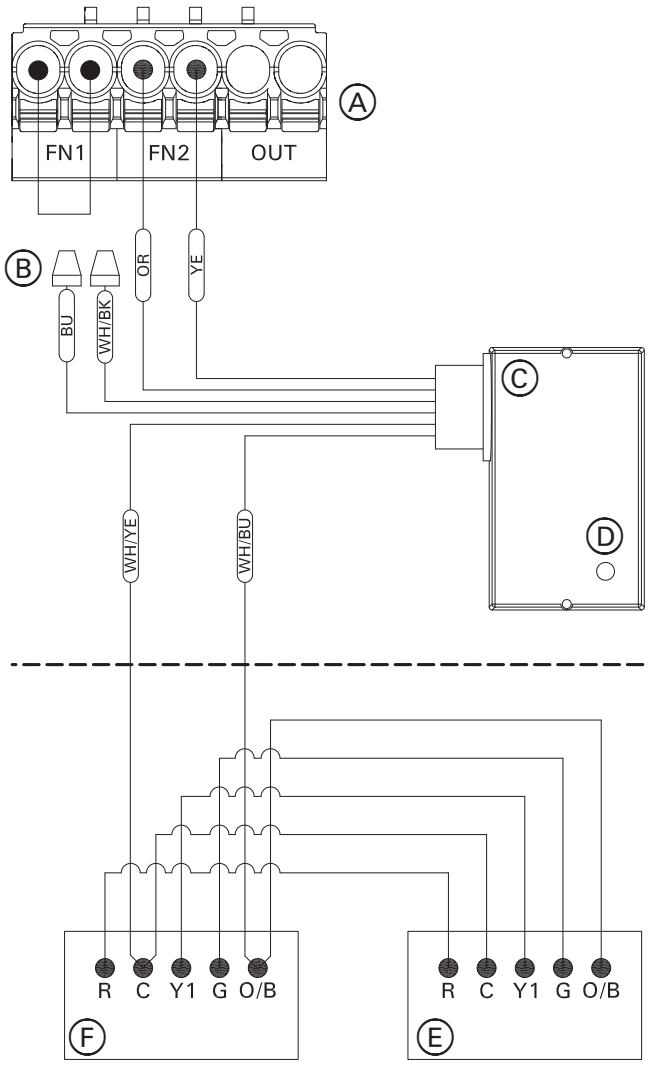

Legend

Ⓐ - Indoor Unit Control Board
Ⓑ - Capped Connections (Wire Connectors field supplied)
Ⓒ - Changeover Relay (Supplied)
Ⓓ - Changeover Relay Indicator Light
Ⓔ - Heat Pump Thermostat (Field Supplied)
Ⓕ - Heat/Cool Hydronic Air Handler (Field Supplied)

Auto Changeover Input FN1:
Input FN1 is supplied with a factory installed jumper across the terminals. Installation of a dry contact on FN1 (external blocking), when contact is closed system will operate as configured with Auto Changeover, when contact is opened the system will be blocked from operation.

Auto Changeover Input FN2:
Connection of a field supplied thermostat allows for automatic changeover of the operating mode (heating/cooling) from the thermostat. When heating is selected on the thermostat, the relay will automatically switch the system to heat mode, and when cooling is selected on the thermostat, the relay will automatically switch the system to cooling mode.

Operation with Auto Changeover Enabled:
When Auto Changeover is enabled, the mode selector dial on the Indoor Unit will function to turn the system 'On' or put the system into 'Standby'. The operating mode (heating or cooling) will be determined by the thermostat.

Relay Light OFF: The Indoor Unit is in heating mode
Relay Light ON: The Indoor Unit is in cooling mode.

Configuring the Thermostat:
The thermostat needs to be configured properly to ensure the functionality of the FN2.

- Heat pump needs to be selected
- Need to choose O/B to be set as cooling

System behavior when the thermostat is set to 'OFF', is dependant on the specific thermostat. Some thermostats default to heating mode, in which case the relay light will be off. Other thermostats may retain the last active mode before turning off, in which case if the system was in cooling mode, the relay light would remain on.

Refer to installation Instructions of the Thermostat

Software Versions:
The Auto Changeover function is only available with the IDU software versions listed below or later, to view software version refer "System Information" on page 58

- S.W. Ver. HMI: PW.25 12.01
- S.W. Ver. PCB: MSPC.09 2.02.03

Power Supply Indoor Unit

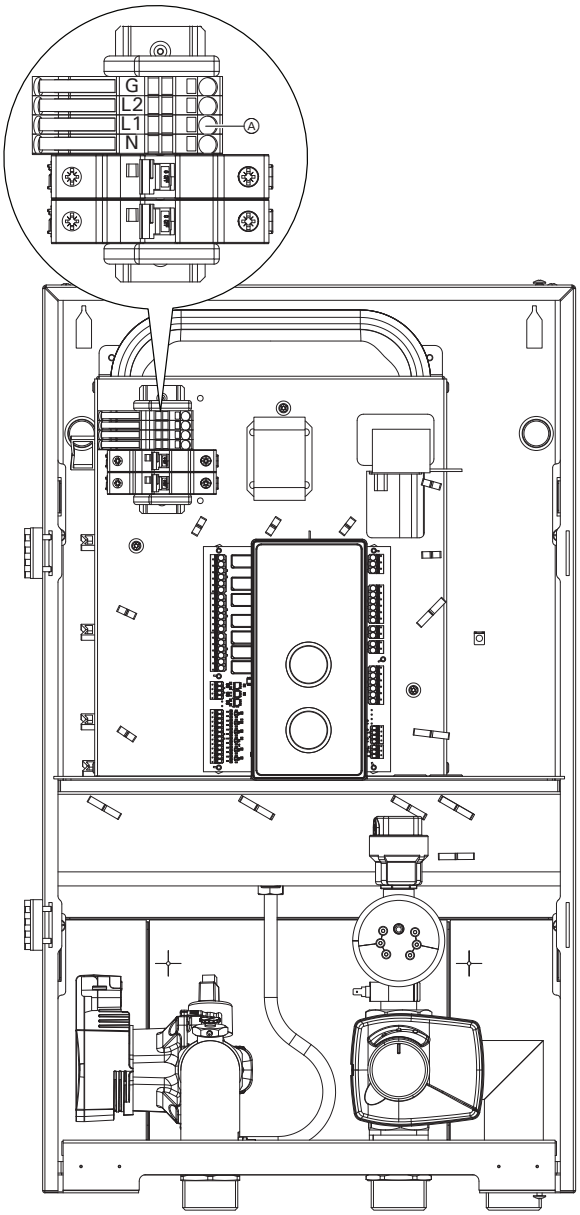

Legend

Ⓐ 230V/1Ph/60Hz Power Supply Connection

33NM3AW020028/33NM3AW034043 Power Supply

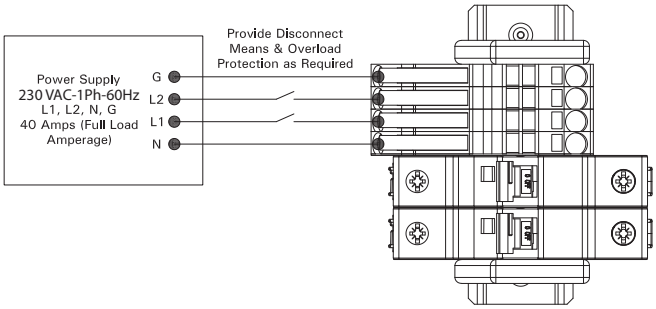

33NM3AW051078 Power Supply

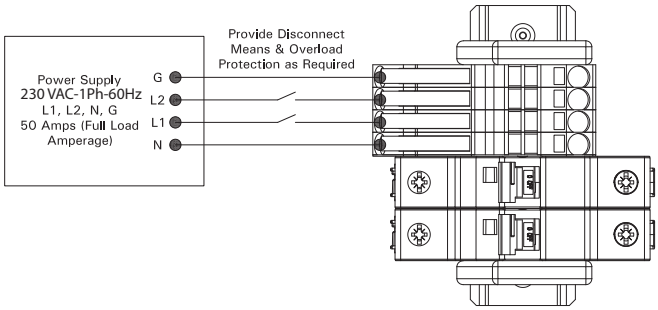

⚠ WARNING

Incorrectly executed electrical installations can lead to injuries from electrical current and result in appliance damage.

⚠ WARNING

The control must be grounded.
Ensure that 'L1', 'L2', 'N' and 'G' are not interchanged.

⚠ IMPORTANT

Electrical installations must comply with the latest edition of:

- **In the U.S.A., the National Electrical Code (NEC), ANSI/NFPA 70 and any other state, local codes and/or regulations.**
- **In Canada, the Canadian Electrical Code (CEC), CSA C22.1 Part 1 and any other province, territory, local codes and/or regulations.**

Dimensions

33NM3AW0200281A3/33NM3AW0340431A3 Outdoor Unit

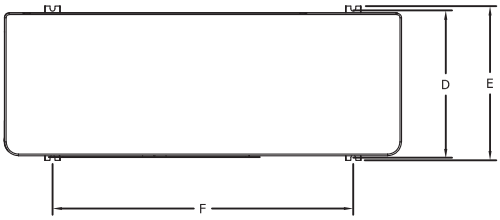

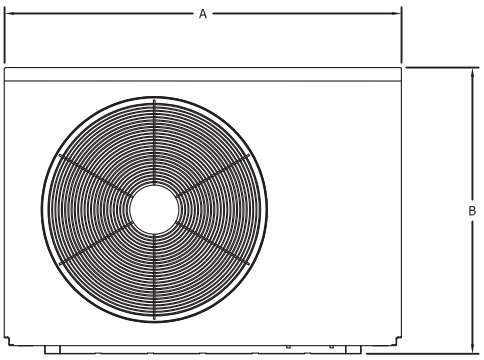

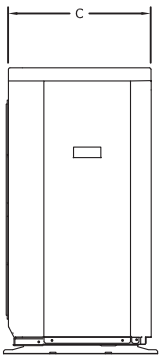

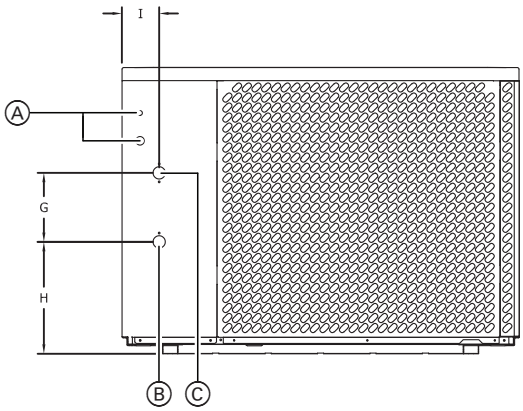

Dimensions in. (mm)

	33NM0AW0200281A3	33NM0AW0340431A3
A	46 (1165)	50-¾ (1285)
B	31-¼ (795)	36-½ (928)
C	15-¾ (400)	18-⅛ (460)
D	17 (428)	18-½ (470)
E	17-¾ (450)	20 (500)
F	32-⅝ (830)	38-⅜ (975)
G	9-⅛ (232)	8-⅝ (220)
H	13 (330)	14-⅛ (360)
I	6-½ (166)	4-⅝ (118)

Legend

Ⓐ - Electrical Connections
Ⓑ - Heat Pump Hydronic Return (1 in. NPT Male)
Ⓒ - Heat Pump Hydronic Supply (1 in. NPT Male)

Dimensions

33NM3AW0510781A3 Outdoor Unit

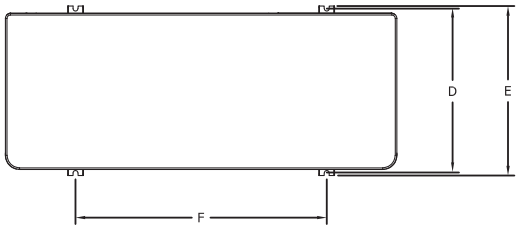

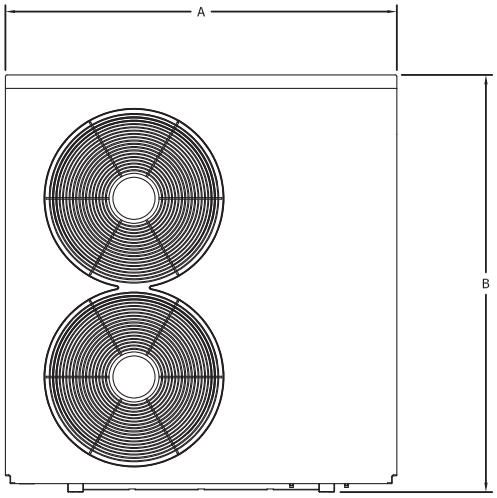

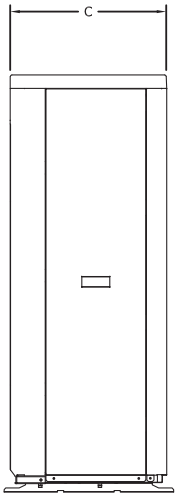

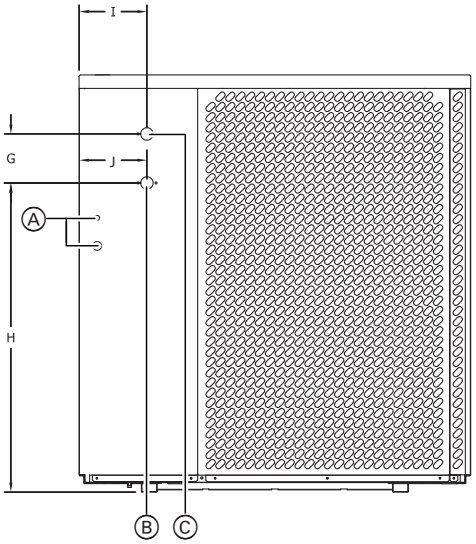

Dimensions in. (mm)

A	49-¼ (1250)	F	31-½ (800)
B	52-⅜ (1329)	G	6-⅛ (155)
C	19-½ (495)	H	37-¾ (983)
D	20-¼ (515)	I	8-½ (215)
E	21-¼ (540)	J	10 (252)

Legend

Ⓐ - Electrical Connections
Ⓑ - Heat Pump Hydronic Return (1 in. NPT Male)
Ⓒ - Heat Pump Hydronic Supply (1 in. NPT Male)

Recommended Minimum Service Clearances

33NM3AW0200281A3/33NM3AW0340431A3 Outdoor Unit

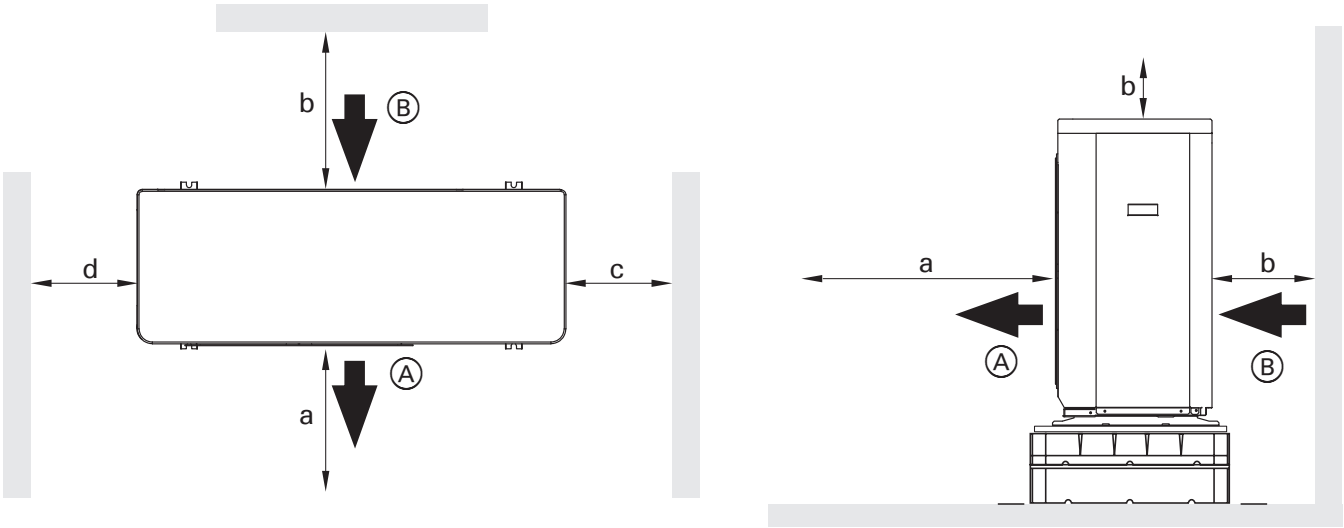

33NM3AW0200281A3/33NM3AW0340431A3 Outdoor Unit

Legend
Ⓐ - Air outlet
Ⓑ - Air inlet

Dimensions in. (mm)

a	59 (1500)
b	20 (500)
c	39 (1000)
d	20 (500)

Recommended Minimum Service Clearances

33NM3AW0510781A3 Outdoor Unit

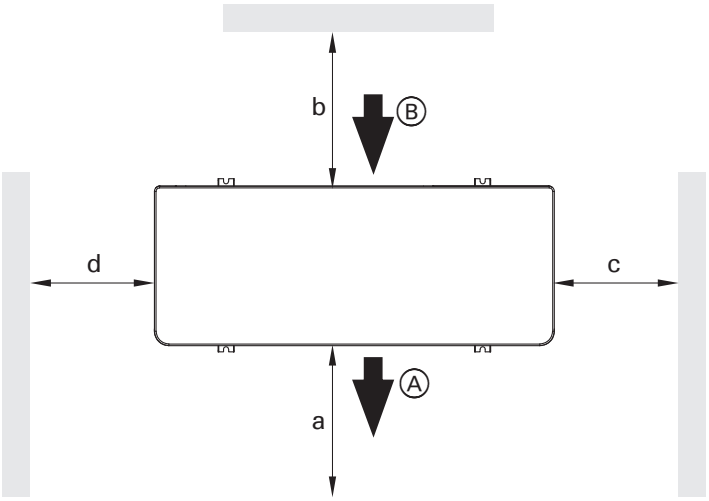

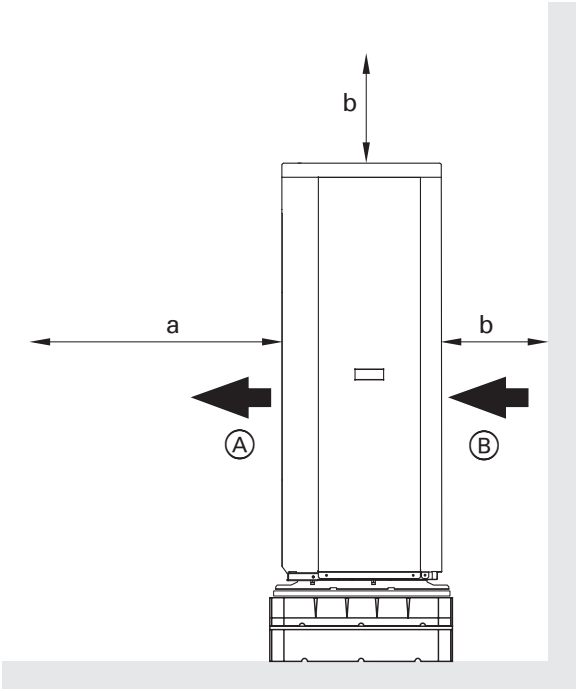

33NM3AW0510781A3 Outdoor Unit

Legend
Ⓐ - Air outlet
Ⓑ - Air inlet

Dimensions in. (mm)

a	59 (1500)
b	20 (500)
c	39 (1000)
d	20 (500)

Outdoor Unit Sound Pressure

Outdoor Unit	Power level acoustic Lw [dB (A)]	Directivity Factor Q	Distance from the noise source ft (m)									
			3.3 (1)	6.6 (2)	9.8 (3)	13.1 (4)	16.4 (5)	19.7 (6)	26.2 (8)	32.8 (10)	39.4 (12)	49.2 (15)
			Sound pressure level [dB (A)]									
33NM3A-W0200281A3	54.8	2	41	46	42	40	38	36	34	32	30	28
		4	44	49	45	43	41	39	37	35	33	32
		8	47	52	48	46	44	42	40	38	36	35
33NM3A-W0340431A3	58.0	2	43	39	36	33	32	31	28	27	25	22
		4	46	42	39	36	35	34	31	30	28	25
		8	49	45	42	39	38	37	34	33	31	28
33NM3A-W0510781A3	60.8	2	44	40	38	35	33	32	30	28	27	23
		4	47	43	41	38	36	35	33	31	30	26
		8	50	46	44	41	39	38	36	34	33	29

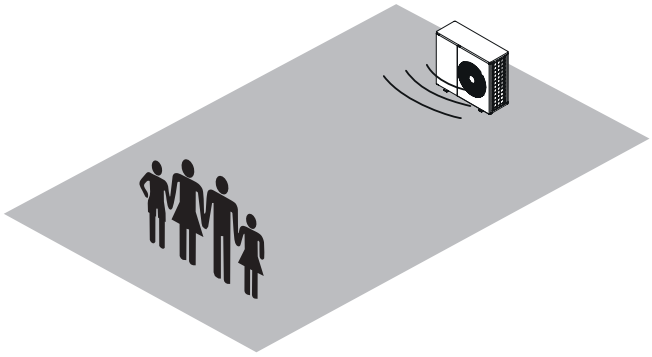

Q = 2: freestanding heat pump on the outside of the building.

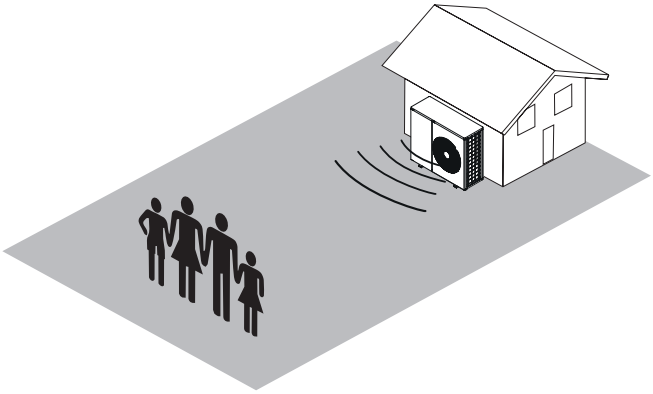

Q = 4: heat pump on the building's wall.

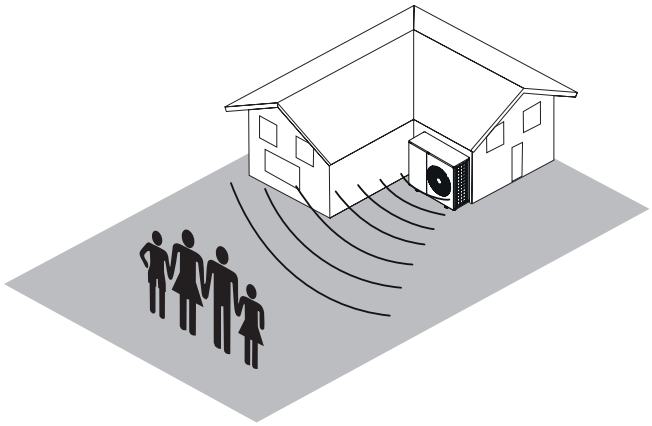

Q = 8: heat pump on the building's wall situated in the corner

Prior to Installation

Mounting:

- Mount the outdoor module in a free-standing position on a fixed supporting structure.
- In areas with snowfall, ensure the outdoor unit has been installed using a snow stand or wall mounting bracket that will elevate the outdoor unit above the anticipated snow load.
- The weight of the outdoor unit must be taken into account: see "Outdoor Unit Technical Data" on page 109.

Setting:

- Do not install the exhaust side upwind.
- Carry out wall ducts and protective conduits for plumbing and electrical connection lines without using bent pipes and without changing the direction of the lines.

Impact of weather conditions:

- When installing in areas exposed to wind, pay attention to wind loads. When the outdoor unit is mounted on a flat roof, significant wind loads may arise depending on the wind load zone and the height of the building. Include the outdoor unit in the lightning protection system.
- When designing rain protection or canopy, pay attention to the heat input (heating mode) and heat output (cooling mode) of the unit.

Condensate:

- Ensure free drainage of the condensate away from the outdoor unit.

Damping of sound and vibration between the building and the outdoor unit:

- Make the hydronic connection to the outdoor unit using flexible connections.
- Electrical cables should be installed without tension.

⚠ IMPORTANT

Strong impacts may lead to a damage to the jacketing of the unit. Do not press against the outdoor unit jacketing.

⚠ IMPORTANT

Tilting the outdoor module sharply may lead to the oil from the compressor entering the refrigeration circuit and to a consequent failure during the start-up. Maximum tilt angle: 45° for approximately 4 min., otherwise 30°

Placement of the outdoor unit:

- Select a location with good air circulation so that cooled air can flow out and warm air can flow in.
- Do not install in corners, recesses or between walls. This may lead to a recirculation of exhaust air.

⚠ IMPORTANT

Restricting the free flow of air may lead to cooled air (or heated in the cooling mode) being drawn back in and lead to disruptions in the operation of the unit, a loss of efficiency and a consequent increase in electrical consumption.

- If set up in an area exposed to strong winds, prevent the wind from affecting the fan area. Strong winds may disrupt the air flow through the evaporator.
- Select the installation location so that the evaporator is not clogged by leaves, snow, etc.
- Consider sound propagation and reflection when selecting the mounting location.

Design guidelines

- Do not mount the device under windows or next to bedroom windows.
- Do not install the device in basement sumps or depressions in the ground.
- Maintain a min. 10 ft. (3 m) distance from basement sumps and windows.
- Maintain a distance from terraces, gutters or surfaces with a protective coating of min. 10 ft. (3 m). At outdoor temperatures below 50°F (10°C), cooled air blown out causes a risk of icing.
- Avoid "short circulating" of air streams with ventilation equipment. Maintain a min. 10 ft. (3 m) distance from the intake area of ventilation units.
- The installation location must be easily accessible, e.g. for service work

Mounting on a Concrete Pad

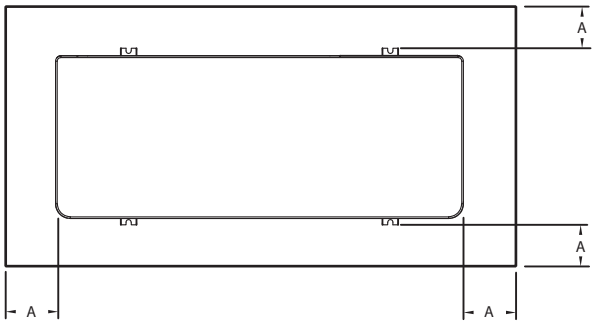

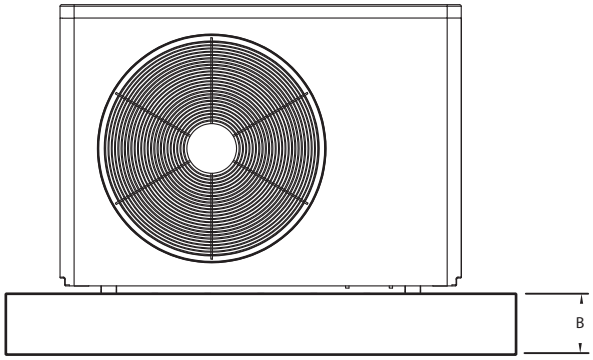

Dimensions in. (mm)

A	2 (50)
B	4 (100)

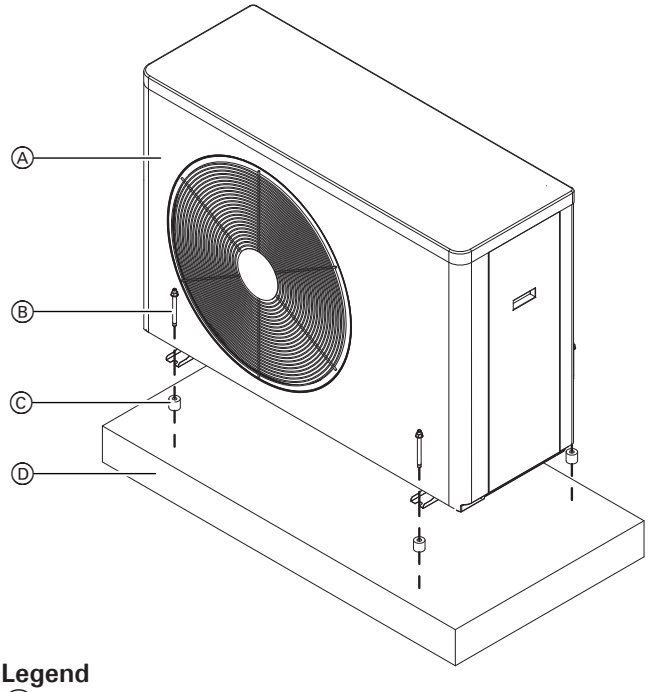

Legend

Ⓐ - Outdoor Unit
Ⓑ - Concrete anchor bolt
Ⓒ - Rubber vibration isolator
Ⓓ - Concrete pad

Concrete Pad Mounting

1. A concrete pad cast in place or a single piece pre-cast concrete or composite slab may be used. Select the size of the pad based on the dimensions provided
2. Center the outdoor unit on the pad
3. Place the rubber vibration isolators provided under the mounting feet.
4. Anchor the unit to the concrete pad.

Note:
Ensure that the condensate drains freely.

Condensate Drain Fittings

Prior to mounting the outdoor unit, install the condensate drain fittings into the base pan of the outdoor unit.

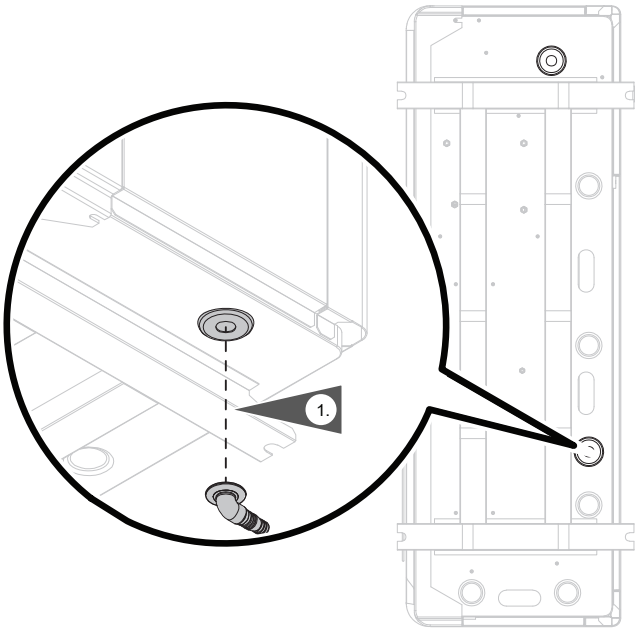

1. Locate the drain relief openings in the base of the outdoor unit an install the supplied condensate drain connectors.

Note:
The 33NM3AW0200281A3 and 33NM3AW0510781A3 outdoor units are equipped with two condensate drain relief openings, the 33NM3AW0340431A3 outdoor unit is equipped with three condensate drain openings.

Mounting using a Mounting Curb

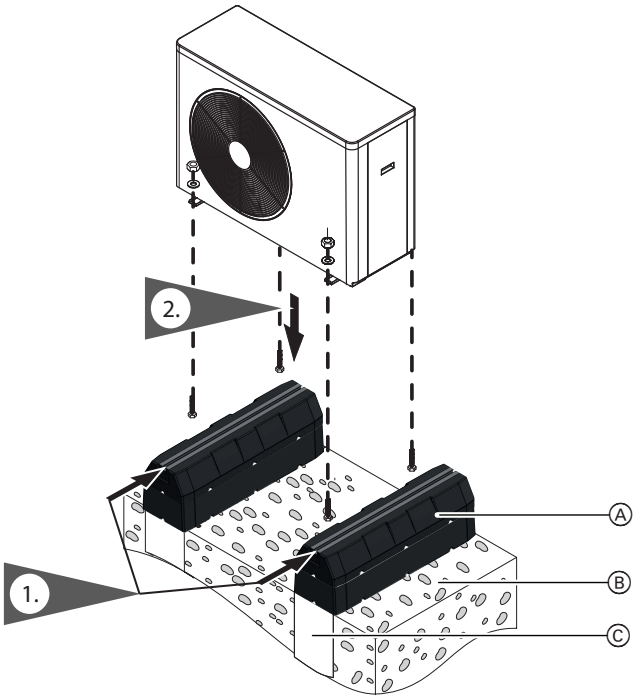

Curb Mounting

1. Slide two mounting bolts into each channel.
2. Align the mounting screws with the retaining tabs on the outdoor unit, place the outdoor unit over the bolts and secure in place.

Legend
Ⓐ - Curb mounting bracket (field supplied)
Ⓑ - Gravel bed to facilitate condensate absorption
Ⓒ - Concrete foundation (if required)

Note:
Ensure that the condensate drains freely, refer to “Condensate Drain Fittings” on page 38

Mounting on Stand

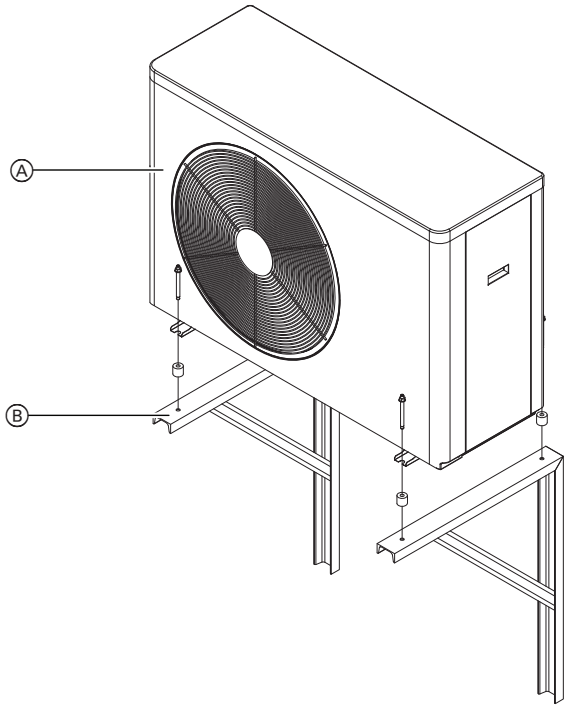

Stand Mounting

1. Assemble and secure stand (field supplied), ensure that spacing aligns with mounting feet of the outdoor unit.
2. Secure outdoor unit to the stand.

Legend
Ⓐ - Outdoor Unit
Ⓑ - Mounting Stand

Note:
Ensure that the condensate drains freely, refer to “Condensate Drain Fittings” on page 38

⚠ IMPORTANT
Ensure that the stand or wall mount bracket is rated to support the weight of the outdoor unit. Follow the manufactures instructions for assembly and mounting requirements.

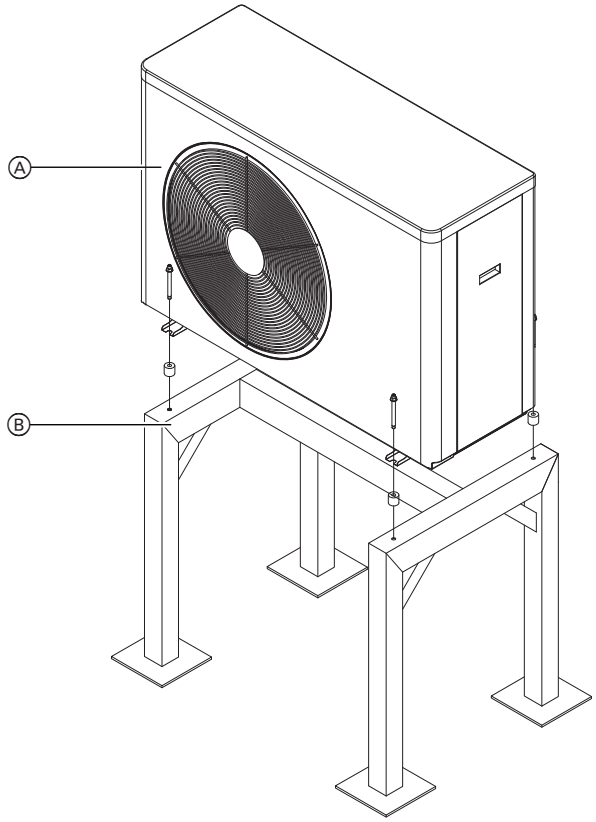

Safety Valve

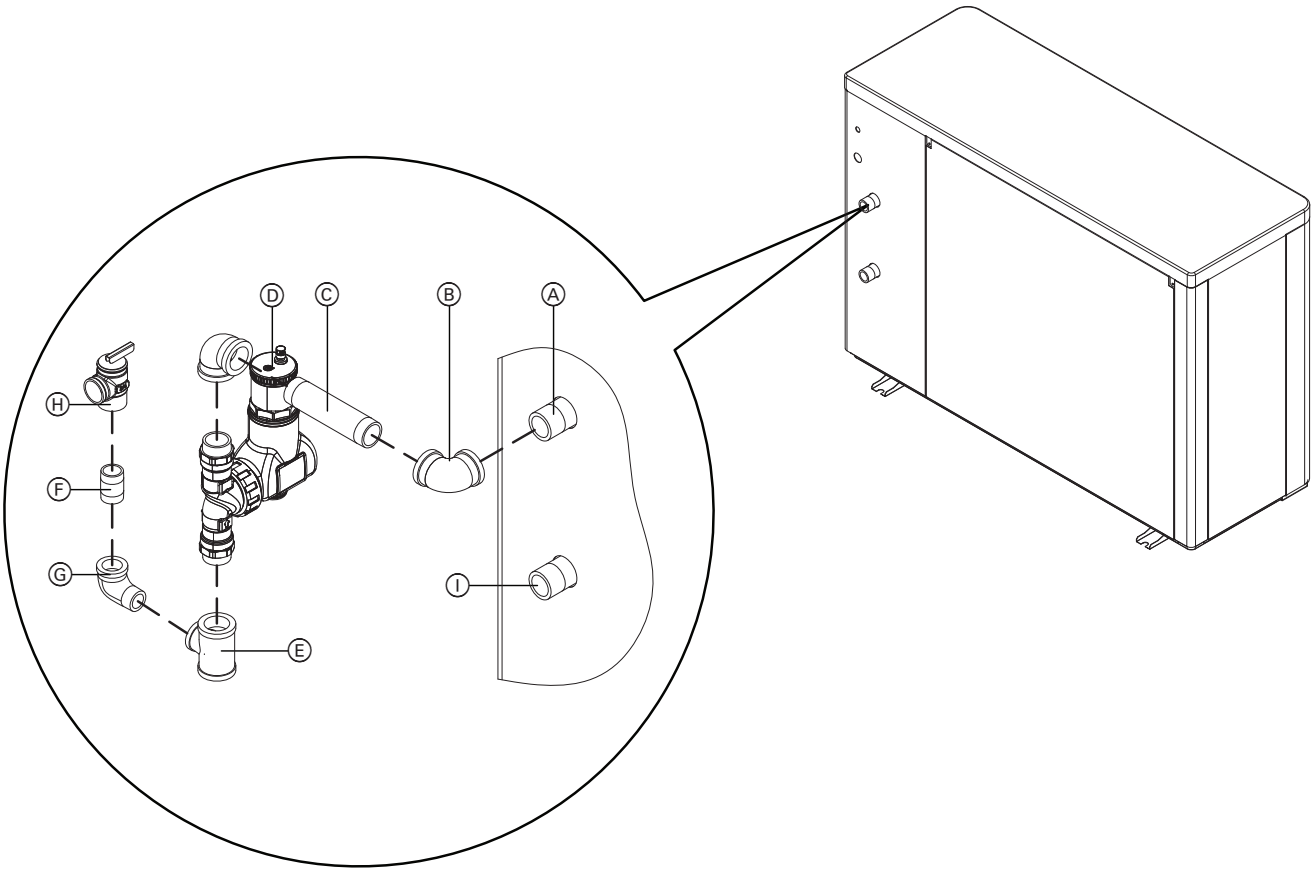

Legend

Ⓐ Supply from Outdoor Unit
Ⓑ 1 Inch Brass 90 Degree Elbow
Ⓒ 1 X 8 Inch Long Brass Nipple
Ⓓ Microbubble Air Separator
Ⓔ 1 X 1 X ¾ Inch Brass Reducing Tee
Ⓕ ¾ Inch Brass Close Nipple
Ⓖ ¾ Inch Brass 90 Degree Street Elbow
Ⓗ 30 PSI Pressure Relief Valve
Ⓘ Return to Outdoor Unit

⚠ WARNING

Do not install an isolation valve between heat pump and pressure relief valve. The discharge pipe for the pressure relief valve must be oriented to prevent scalding of attendants. Pipe pressure relief valve discharge pipe close to floor drain. Never pipe discharge pipe to the outdoors.

⚠ IMPORTANT

Install the (approved) factory supplied pressure relief valve. Removal of air from the system must occur via use of air vent(s) in the system supply. To ensure the heat pump can be purged of all air, ensure supply/return water lines do not contain restrictive piping where air could be trapped.

Installing the pressure relief valve:

1. Use the supplied fittings to install the pressure relief valve on the Supply from Outdoor Unit.

Minimum connection diameters:
Pressure relief valve..... ¾ in.
Discharge pipe ..... ¾ in.
Maximum operating pressure: 30 PSI (2 bar)
Minimum operating pressure: 8 PSI (0.5 bar)

Installing the discharge pipe:

1. Install discharge pipe on pressure relief valve in such a way that...
   - the end of the pipe is not threaded.
   - the pressure relief discharge pipe approximately 6 in. (150 mm) above the ground.

Ensure that...
   - there is no shutoff valve installed in the discharge pipe.
   - discharge pipe diameter is not reduced.

Piping Connections

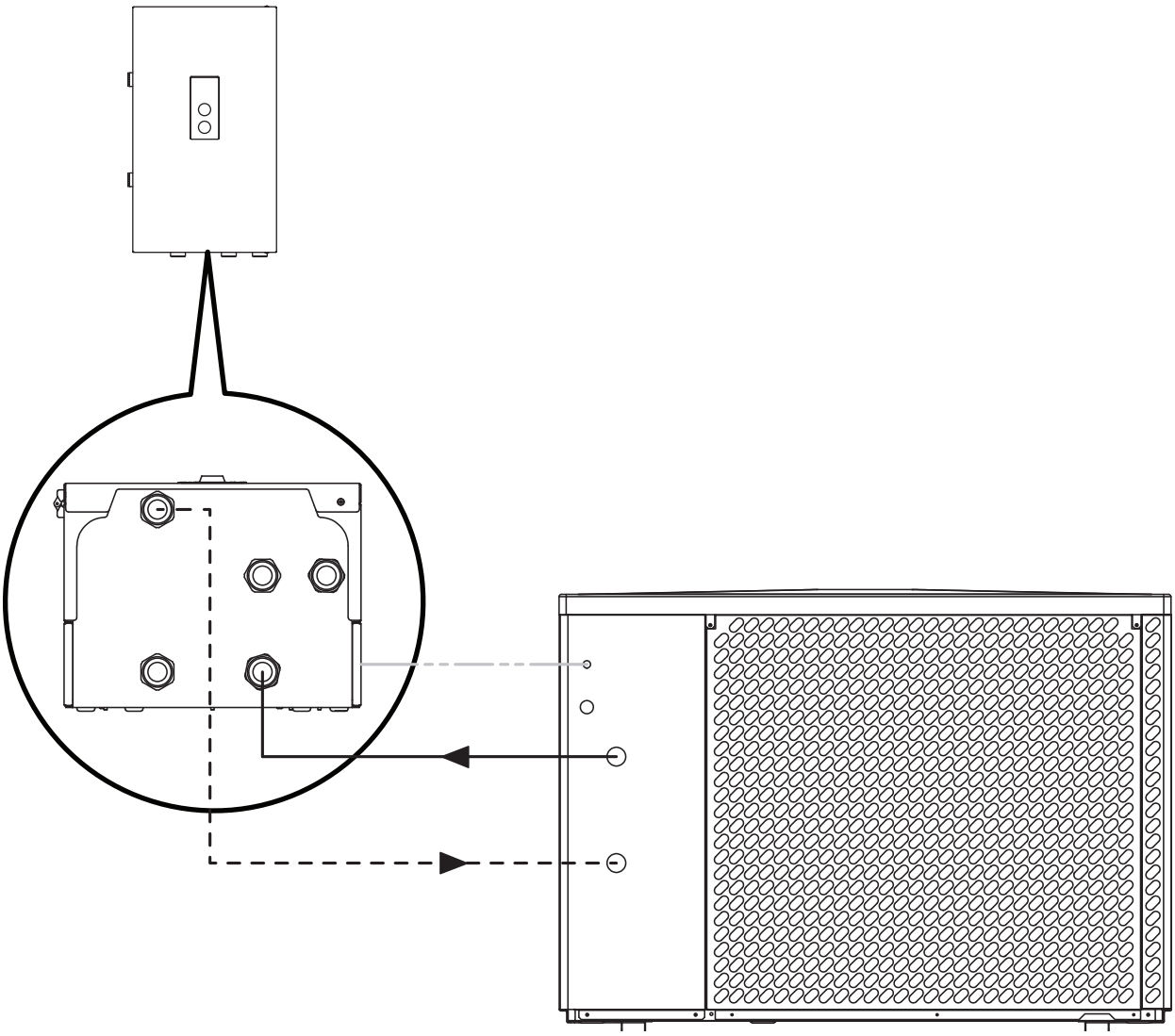

Connection between Indoor and Outdoor Unit

This is a simplified schematic of the connection points between the Indoor Unit and the Outdoor Unit, and does not represent all the required components.

Accessing the Outdoor Unit

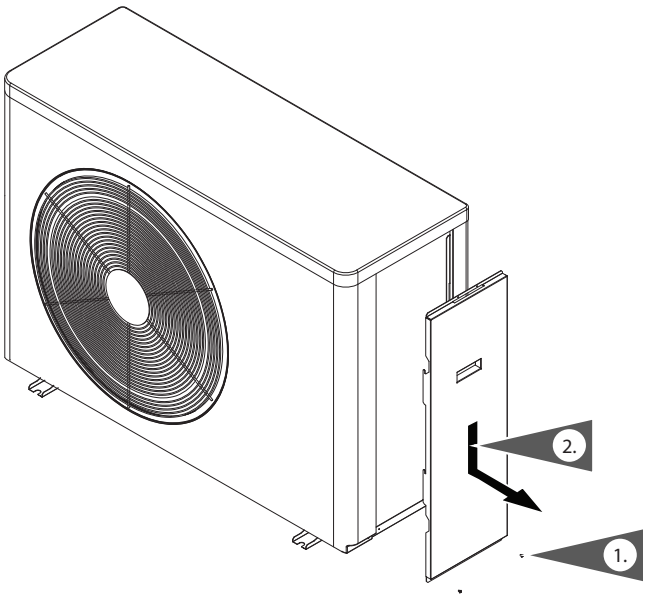

Accessing the Outdoor Unit

1. Remove the two access panel retaining screws and set aside.
2. Slide the access panel down and pull out to remove.

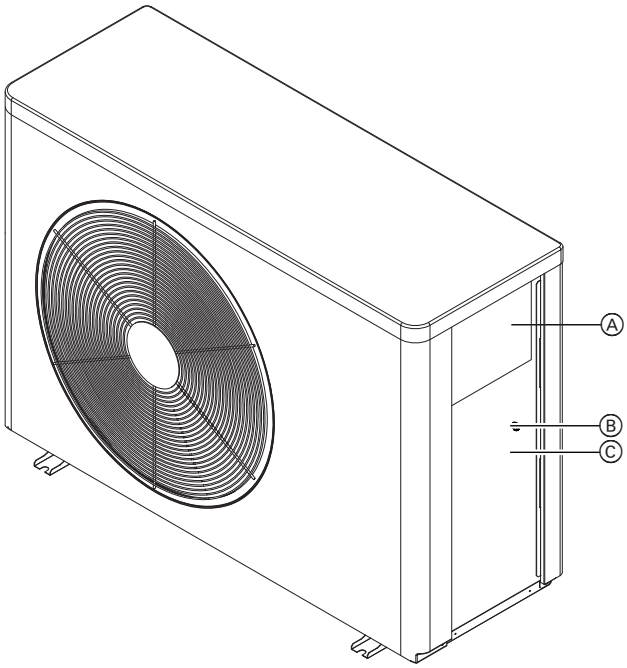

Connection Overview

Ⓐ - Outdoor unit electrical connections board
Ⓑ - Grommet for low voltage connections
Ⓒ - 3/4 Inch knockout for power supply

Power Supply Outdoor Unit

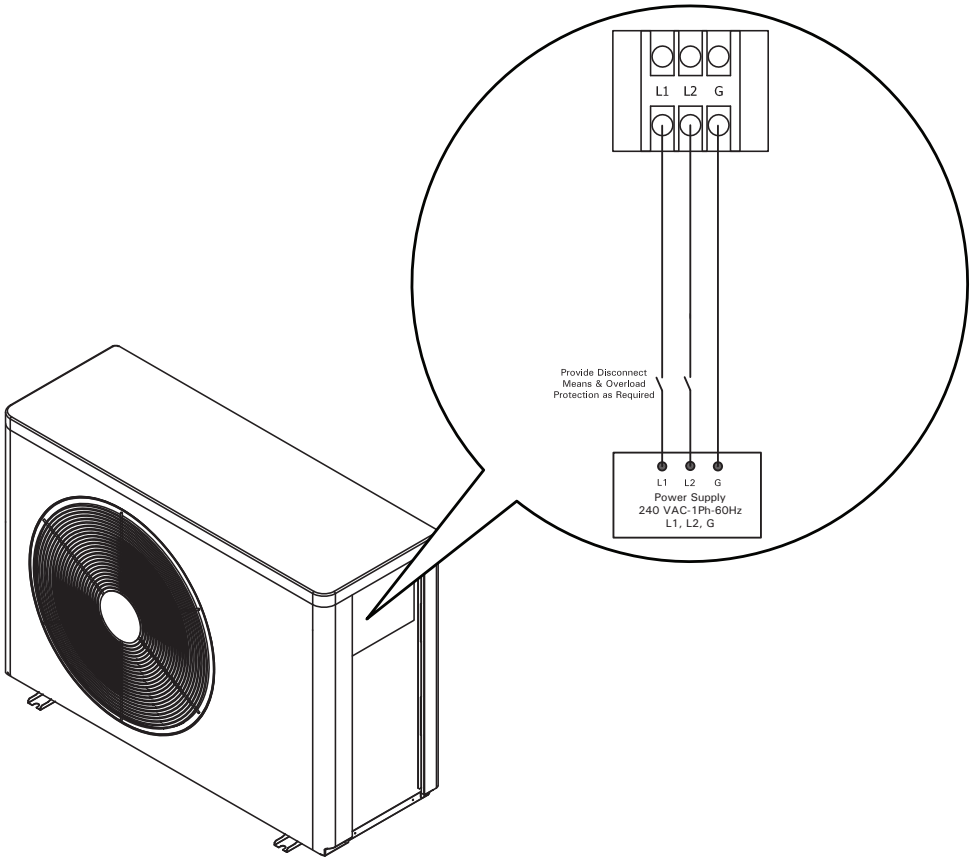

Power Supply Requirements

33NM3AW0200281A3
208/230V-1Ph-60Hz Maximum 25 Amp Breaker

33NM3AW0340431A3
208/230V-1Ph-60Hz Maximum 45 Amp Breaker

33NM3AW0510781A3
208/230V-1Ph-60Hz Maximum 60 Amp Breaker

⚠ WARNING

Incorrectly executed electrical installations can lead to injuries from electrical current and result in appliance damage.

⚠ WARNING

The control must be grounded.
Ensure that 'L1', 'L2', 'N' and 'G' are not interchanged.

⚠ IMPORTANT

Electrical installations must comply with the latest edition of:

- **In the U.S.A., the National Electrical Code (NEC), ANSI/NFPA 70 and any other state, local codes and/or regulations.**
- **In Canada, the Canadian Electrical Code (CEC), CSA C22.1 Part 1 and any other province, territory, local codes and/or regulations.**

Communication

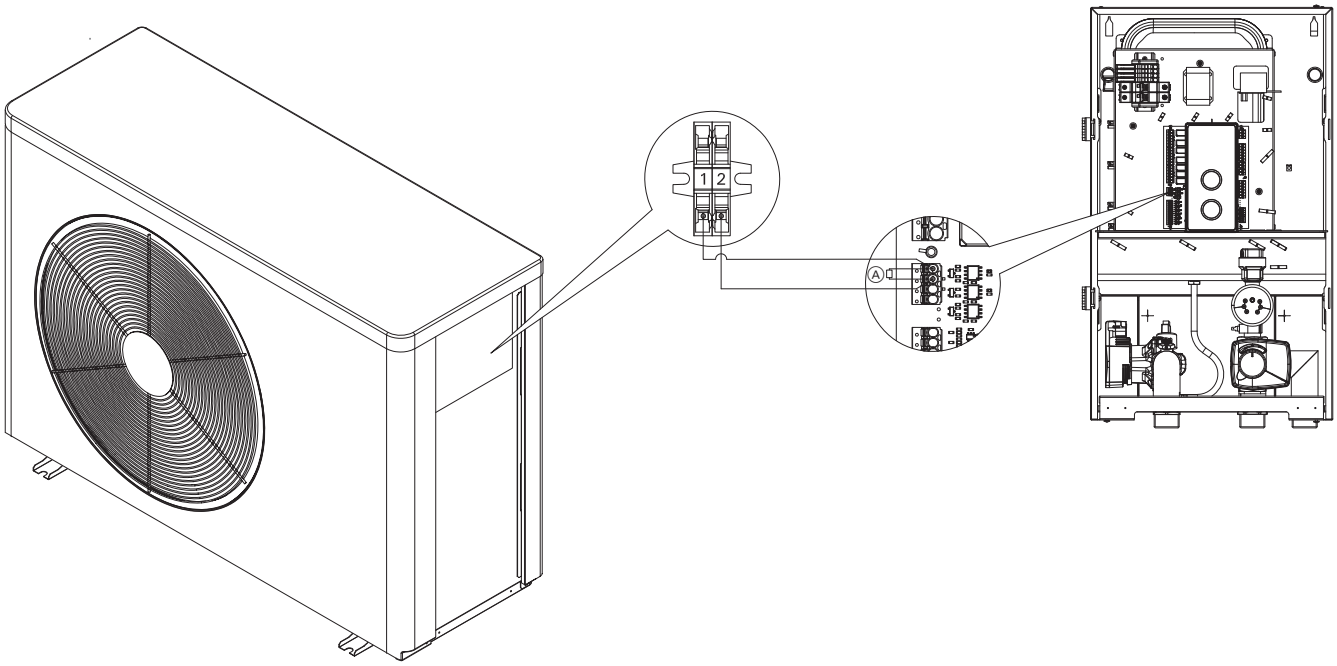

⚠ IMPORTANT

Do not use any solid core communication wires to connect the indoor unit to the outdoor unit, this includes the use of thermostat wires.

Communication

Ⓐ - End of Line Resistor

The indoor unit communicates with the outdoor unit through Modbus protocol. Use a stranded two wire twisted pair, shielded 22 AWG cable to connect the following terminals;

Indoor Unit terminal EU 'A' to Outdoor Unit DIN rail terminal 1.

Indoor Unit terminal EU 'B' to Outdoor Unit DIN rail terminal 2.

Install the supplied 120 Ohm end of line resistor Ⓐ across terminals EU A and B with communication wires to the outdoor unit.

Installation Examples

The indoor and outdoor units can operate in a closed-loop hydronic system (the minimum heating medium pressure is 8 PSI [0.5 bar]). The hydronic installation must be carried out in compliance with the applicable standards. The pipes connecting the heat pump outdoor unit to the indoor unit must be sized to ensure an adequate flow of the heating medium (see technical data table).

Flexible piping must be used to connect the heat pump to the hydronic system to prevent the transmission of vibrations to the system. The heating medium pipes and connections must be thermally insulated. Do not switch off the unit when the outdoor air temperature is below freezing. Leaving the outdoor unit powered will protect the condenser of the outdoor unit from damage. If there is a risk of power failure, the heat pump heating circuit must be isolated from the hydronic module by means of an additional exchanger and the heat pump heating circuit must be filled with an antifreeze. A prerequisite for the warranty is an installation of a solids separator at the unit inlet.

The hydronic installation must be made in such a way that the indoor unit can be operated in the heating circuit without the outdoor unit (according to the following installation diagrams). This will ensure the operation of the heating system in the event of a failure of the outdoor unit.

Please note that in the following piping layout examples all pumps are field supplied.

⚠ WARNING

If a DHW storage tank other than the recommend tank is used, the installer must verify proper operation of the DHW tank temperature sensor with original manufacturer of the tank. It's strongly recommends the installation of a temperature tempering valve in the DHW supply line.

⚠ IMPORTANT

The examples on the following pages depict possible piping layouts of the heat pump. For heat pump and tank combinations, please install only feasible combinations. Please note that the following examples are simplified conceptual drawings only! Piping and necessary componentry must be field verified.

⚠ IMPORTANT

DHW supply and return piping between DHW connections on the indoor unit and the DHW tank connections, shall be a minimum of outlet sizes. This will ensure the residual head of the integral pump is fully utilized to overcome the resistance of the DHW heat exchanger coil and to provide sufficient water flow to the heat pump heat exchanger.
Accurate calculations for DHW tank coil pressure drop versus internal pump residual head to ensure sufficient water flow to the heat exchanger. Failure to heed the above instructions may inadequate DHW supply.

System Example 1

System with:

- One direct-connected heating circuit
- One heating circuit with a mixing valve
- System Buffer Tank
- DHW Storage Tank

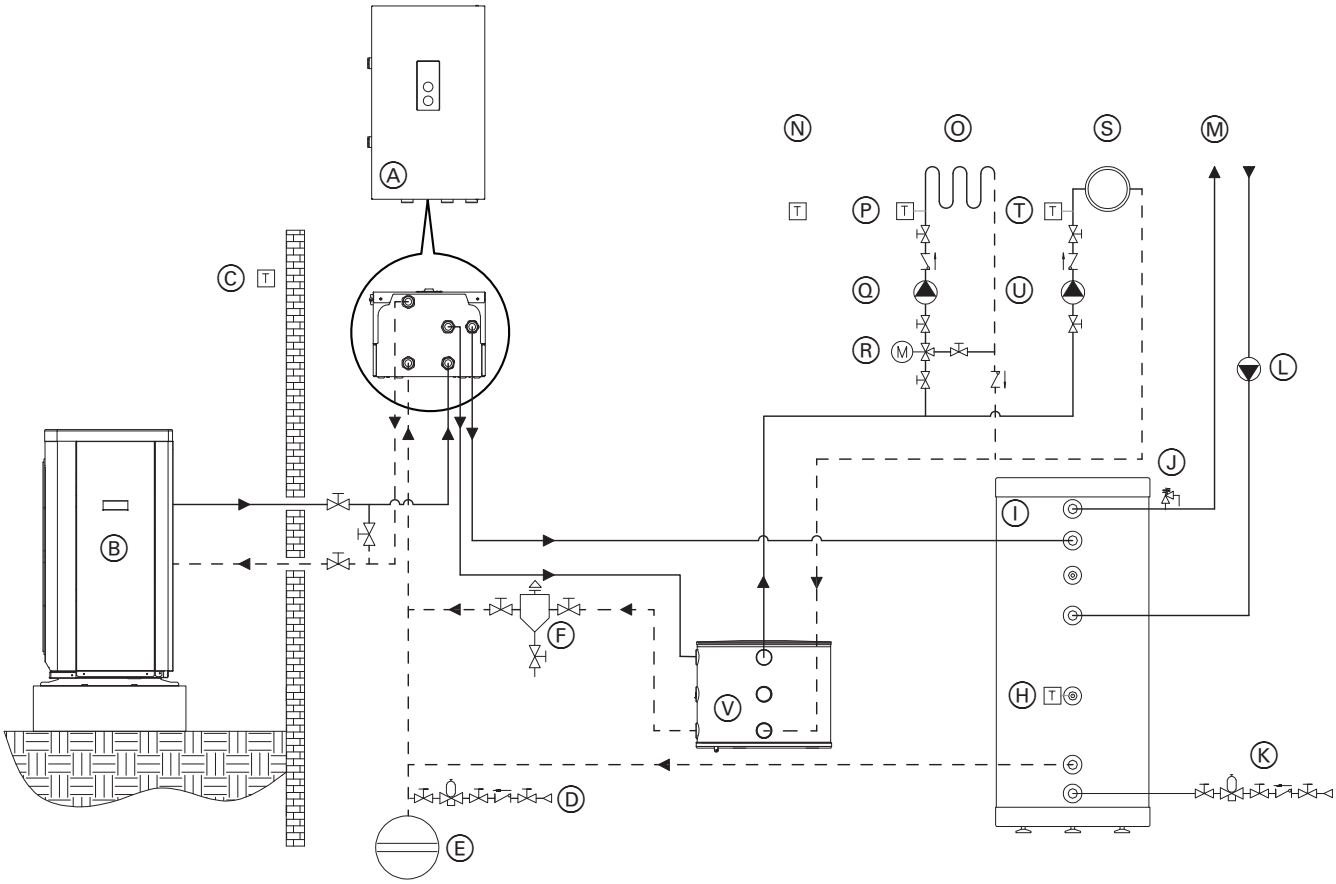

Legend:

Ⓐ Indoor Unit
Ⓑ Outdoor Unit
Ⓒ Outdoor Temperature Sensor
Ⓓ System Feed
Ⓔ Expansion Tank
Ⓕ Wye Strainer
Ⓗ DHW Temperature Sensor
Ⓘ DHW Storage Tank
Ⓙ Temperature and Pressure Relief Valve
Ⓚ Potable Water Inlet
Ⓛ DHW Recirculation Pump
Ⓜ DHW Outlet
Ⓝ Room Temperature Sensor
Ⓞ Low Temperature Heating Circuit
Ⓟ Heating Circuit Temperature Sensor
Ⓠ Heating Circuit Pump
Ⓡ Heating Circuit Mixing Valve
Ⓢ High Temperature Heating Circuit
Ⓣ Heating Circuit Temperature Sensor
Ⓤ Heating Circuit Pump
Ⓥ 20USG (75L) Buffer Tank

⚠ IMPORTANT

System separation is required of underfloor heating systems employing non-oxygen diffusion barrier tubing. All components on the secondary side of the heat exchanger must be made of corrosion-resistant materials.

System Example 2

System with:

- One direct-connected heating circuit
- One heating circuit with a mixing valve
- One fan coil
- System Buffer Tank
- DHW Storage Tank

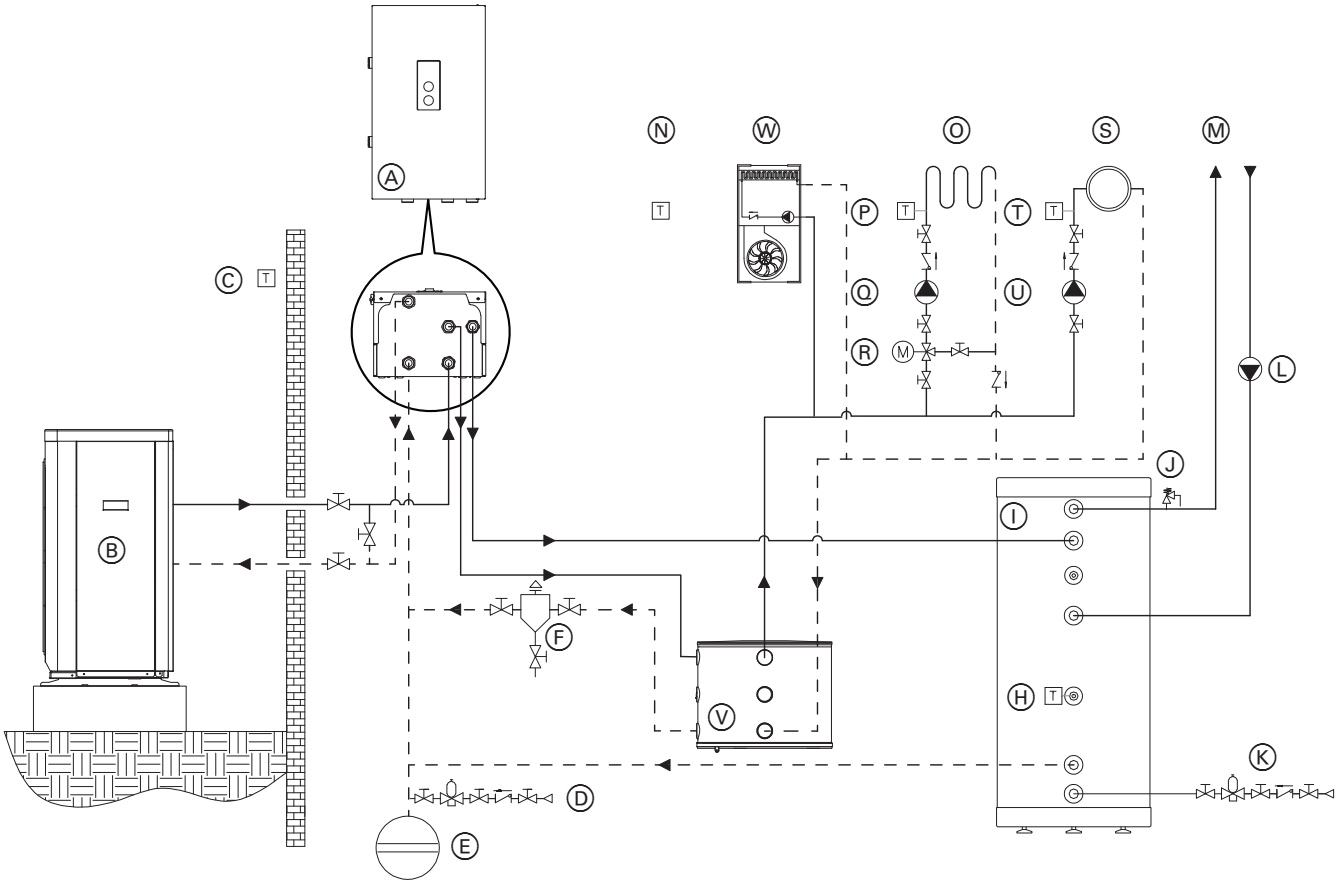

Legend:

Ⓐ Indoor Unit
Ⓑ Outdoor Unit
Ⓒ Outdoor Temperature Sensor
Ⓓ System Feed
Ⓔ Expansion Tank
Ⓕ Wye Strainer
Ⓗ DHW Temperature Sensor
Ⓘ DHW Storage Tank
Ⓙ Temperature and Pressure Relief Valve
Ⓚ Potable Water Inlet
Ⓛ DHW Recirculation Pump
Ⓜ DHW Outlet
Ⓝ Room Temperature Sensor
Ⓞ Low Temperature Heating Circuit
Ⓟ Heating Circuit Temperature Sensor
Ⓠ Heating Circuit Pump
Ⓡ Heating Circuit Mixing Valve
Ⓢ High Temperature Heating Circuit
Ⓣ Heating Circuit Temperature Sensor
Ⓤ Heating Circuit Pump
Ⓥ 20USG (75L) Buffer Tank
Ⓦ Fan Coil

⚠ IMPORTANT

System separation is required of underfloor heating systems employing non-oxygen diffusion barrier tubing. All components on the secondary side of the heat exchanger must be made of corrosion-resistant materials.

6241203 - 03

User Interface

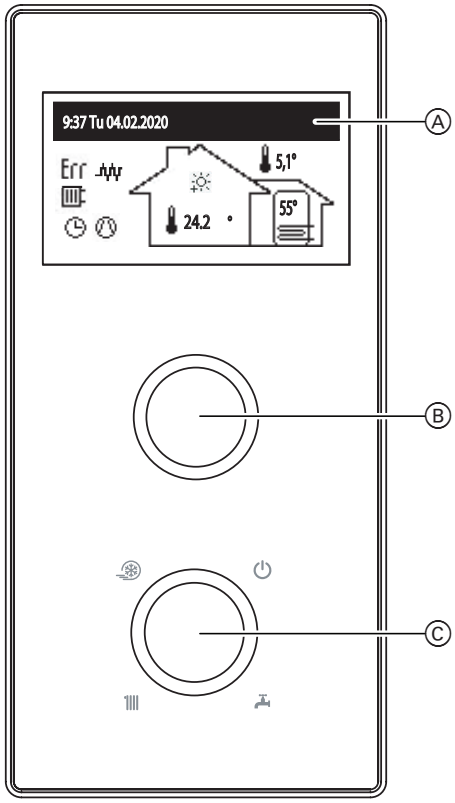

Legend
Ⓐ - Display
Ⓑ - Navigation Dial
Ⓒ - Mode Selector Dial

Use the mode selection dial Ⓒ to set one of the modes:

Winter (Space heating + DHW)	
Summer (Space Cooling + DHW)	
Standby (Frost Protection Active)	

Turning the navigation dial Ⓑ (left or right), with the winter or summer mode being active, switches the function screens on the display Ⓐ. To select the desired menu item press on the navigation dial Ⓑ.

- Home Screen: indicates the basic parameters of the heat pump (see the table for details),
- Diagnostics Menu: allows the input and output signals of the heat pump to be viewed.
- Settings Menu: allows the heat pump parameters to be adjusted to the user's preferences.
- Service Menu: allows for heat pump configuration to object's conditions (available to the installer and service contractors though an access code) and preview of input and output heat pump's signals and current parameters.
- Time Schedule Override: Allows the homeowner to override the active heating/cooling function without needing to adjust the time schedule

Pressing and holding the navigation dial when in any menu will return you to the home screen.

The individual functions are accessed by selecting the relevant menu screen and pressing the navigation dial. If an error or warning in the system occurs, the home screen will display either a Err or ⚠. By pressing on dial Ⓑ, a list of detected errors and warnings will be displayed.

Display Symbols and Indications

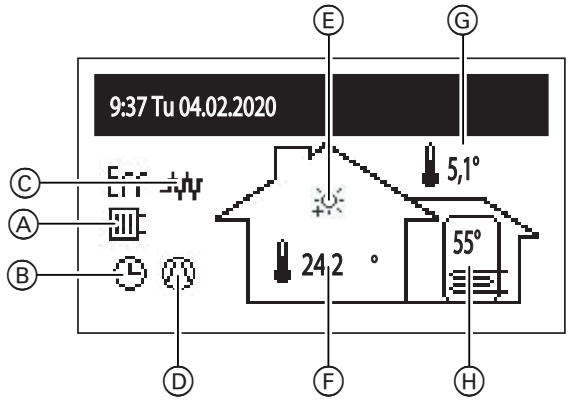

Legend

Ⓐ - Signalling of heat take-up
Ⓑ - Heating Program 'ON' Indication
Ⓒ - Heater 'ON' Indication
Ⓓ - Compressor Operation Indicator
Ⓔ - Set Room Temperature
Ⓕ - Actual Room Temperature
Ⓖ - Outdoor Temperature
Ⓗ - DHW Tank Temperature

Indication of the running program

	According to a pre-set daily/weekly schedule
	Disinfection of the storage tank
	Defrost cycle running
	PARTY - maintaining a comfortable temperature in the room and the cylinder
	HOLIDAYS - maintaining an economic or frost-free temperature in the room and the storage tank
	Implementation of the frost protection program
	MANUAL - maintaining the desired temperature in the room

Indication of Operating Mode

	Signalling of space heating
	Signalling of DHW heating
	Cooling operation indication

Other Symbols

Err	Error indication
	Warning indication
	Electric heat element is active
	Compressor Operation Indicator ■ Solid indicates that the compressor is active ■ Flashing indicates that the compressor is active and the outdoor temperature is low enough for electric heat element activation
	Back-up Heating On

Initial Start-up

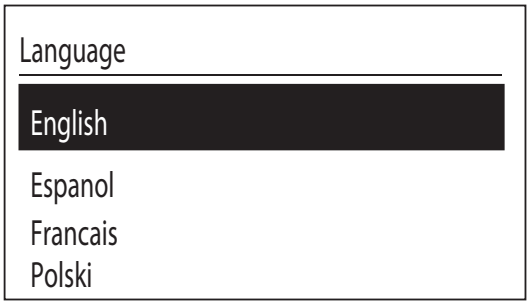

When first powering up the indoor unit, you will be prompted to select the operating language, and the model of connected outdoor unit.

1. Scroll with the navigation dial to select the desired language and press the dial to select.
2. Scroll with the navigation dial to select the connected outdoor unit and press the dial to accept

Diagnostics Menu

This menu displays the current operating conditions of the heat pump indoor and outdoor units. Parameters displayed are based on the configuration of the system

Settings Menu

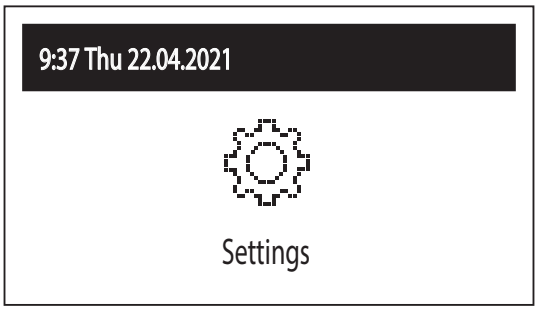

This menu provides access to the user adjustable settings of the heat pump. These settings include room temperature setpoint, DHW temperature setpoint, time schedules, etc. Available menu items may change depending on system configuration.

Setting the Room Temperature

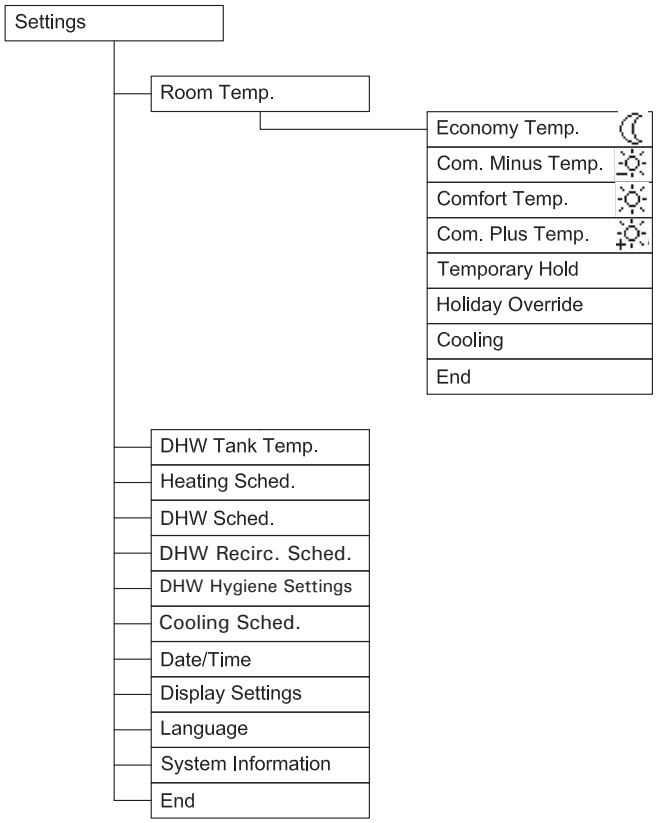

There are four different programmable room temperature setpoints for heating, these are used when configuring the time schedule. The four temperature setpoints are:

- Economy Temp.☾
- Com. Minus Temp. ☼
- Comfort Temp. ☼
- Com. Plus Temp. ☼

The 'Temporary Hold' temperature setpoint uses the selected comfort temperature setting for space heating when the party mode is active.

The 'Holiday Override' temperature setpoint uses the selected economy or frost protection temperature setting for space heating when the program is active.

The 'Cooling' temperature setpoint is for space cooling (only available with room temperature sensor).

Scroll through the menu with the navigation dial and press the navigation dial to select. When complete select 'End' to return to the settings menu.

Note: Frost protection (❄) in the standby and summer modes, if the room temperature falls below 45°F (7°C), the central heating circuit will be activated. A room temperature sensor is required to activate the function.

Setting the DHW Temperature

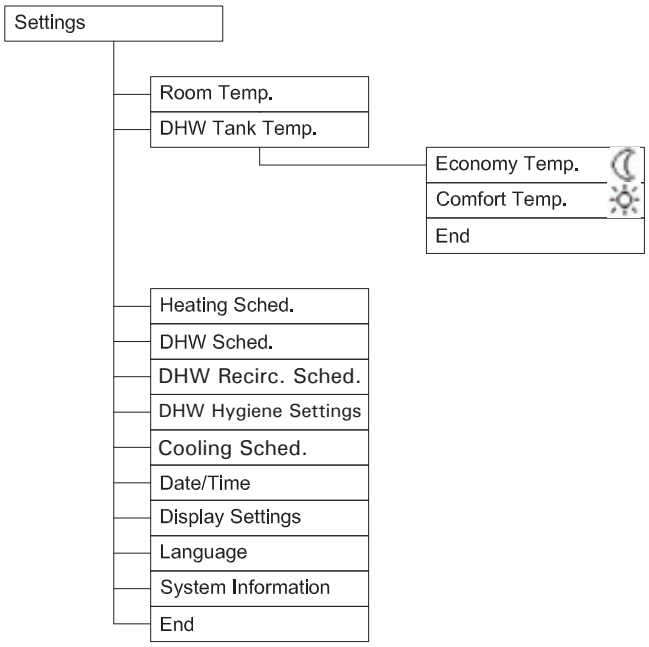

DHW heating activates when the DHW tank temperature is 7°F (4°C) under setpoint, DHW heating ends once tank temperature reaches setpoint. There are two different programmable DHW temperature setpoints for heating, these are used when configuring the time schedule. The two temperature setpoints are:

- Economy Temp.☾
- Comfort Temp.☼

Scroll through the menu with the navigation dial and press the navigation dial to select. When complete select 'End' to return to the settings menu.

Note: With frost protection (❄) enabled and DHW temperature falls below 45°F (7°C), DHW tank heating will be enabled.

Setting a Time Schedule

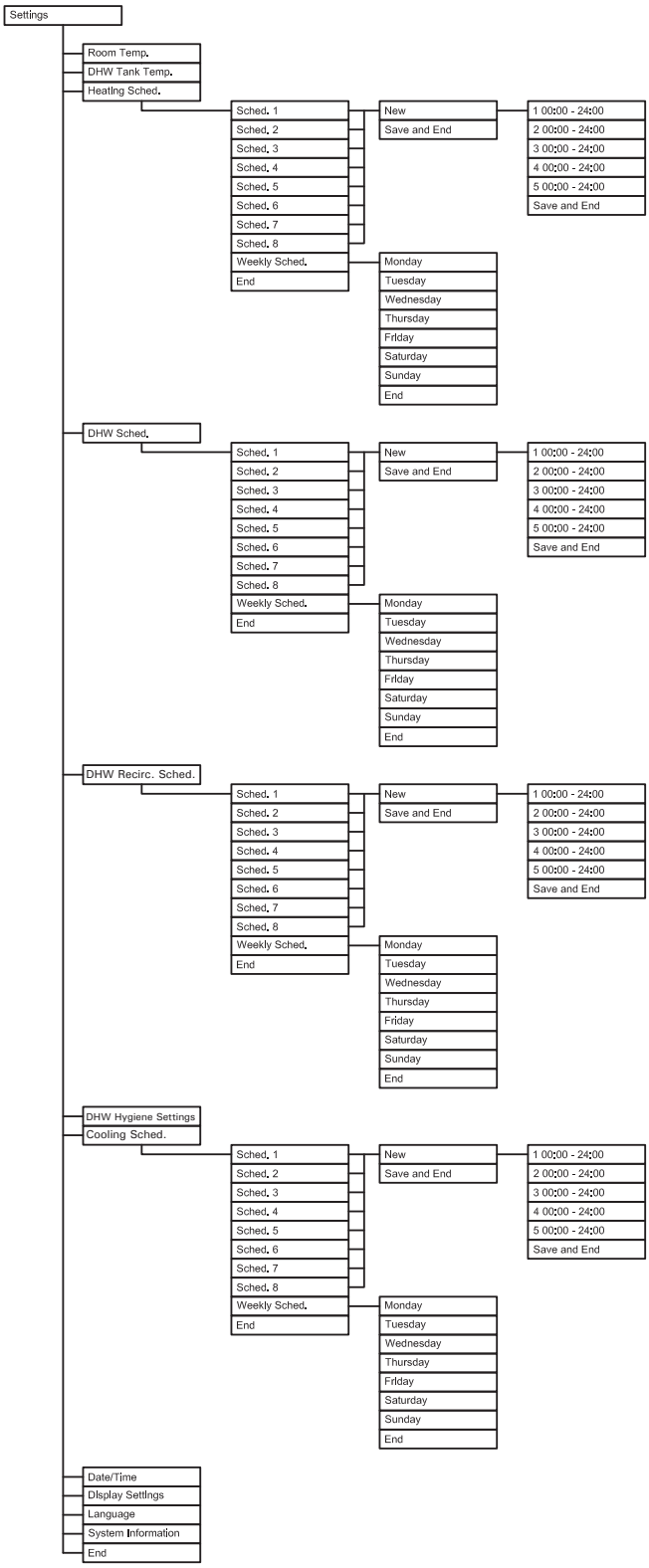

The control allows for a maximum of 8 space heating time schedules, Sched. 1 through Sched. 8, which and be applied to each day of the week.

Each of the 8 time schedules has five editable time frames, which can have different temperature setpoints.

For space heating, there are four selectable room temperature setpoints (❄ ,☼ ,☼ , or ☼). The default setting of the space heating schedule is the economy temperature setpoint (☾).

For DHW, there are two selectable DHW temperature setpoints (❄ or ☼). The default setting and times between temperature setpoints of the DHW heating schedule is the economy temperature setpoint (☾).

For DHW recirculation, only a start time and end time for DHW recirculation are programmable.

For space cooling, only a start time and end time for space cooling are programmable.

The 'Weekly Sched.' setting option assigns one of the eight daily time schedules to a selectable day of the week, each day of the week can have a different time schedule.

Setting a Time Schedule

Space Heating Time Schedule

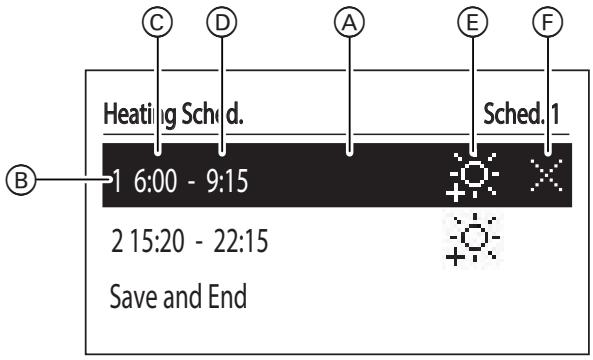

Legend
Ⓐ - active time frame
Ⓑ - no. of time frame according to schedule (max 5)
Ⓒ - starting time of the selected temperature
Ⓓ - finishing time of the selected temperature
Ⓔ - temperature selection (❄, ☼, ☼, or ☼)
Ⓕ - command (active when editing):

- ☑ accept
- ☒ delete
- ⊞ add

DHW Time Schedule

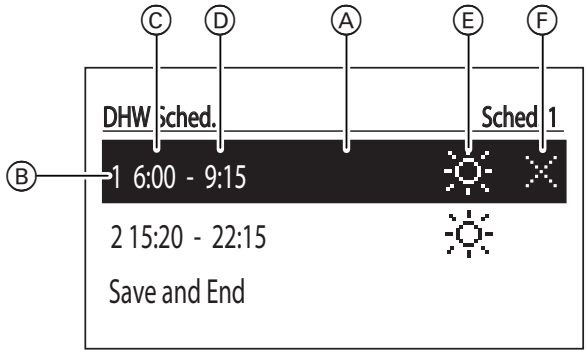

Legend
Ⓐ - active time frame
Ⓑ - no. of time frame according to schedule (max 5)
Ⓒ - starting time of the selected temperature
Ⓓ - finishing time of the selected temperature
Ⓔ - temperature selection (❄ or ☼)
Ⓕ - command (active when editing):

- ☑ accept
- ☒ delete
- ⊞ add

In daily schedule the heating circuits have a defined starting time Ⓒ and finishing time Ⓓ of maintaining selected temperature value Ⓔ in the room. Outside defined time frames economy temperature will be maintained in the room temperature.

In daily schedule the DHW heating has a defined starting time Ⓒ and finishing time Ⓓ of maintaining selected temperature value Ⓔ in the DHW tank. Outside defined time frames economy temperature will be maintained in the reduced temperature.

Adjusting the time schedule

1. Select chosen program number and press navigation dial. The first parameter flashes (start time).
2. Use the navigation dial to set the new time frame value (hour and minutes separately) by turning the dial, and confirm it by pressing the dial.
3. Repeat the process for finishing time.
4. Use the navigation dial to set the new temperature selection by turning the dial, and confirm it by pressing the dial.
5. Use the navigation dial to select the command column. To save changes select ☑ command and press the dial to finish editing. To delete selected time frame select command ☒ and press the dial.
6. To add new time frame, select last defined time frame and by pressing the dial go to command position, select command ⊞ and press the dial to add new time frame (edition of new time frames described above).

The entire day program is saved in the controller's memory when you exit the day program by pressing the "Save and end" command.

Setting a Time Schedule

DHW Recirculation Time Schedule

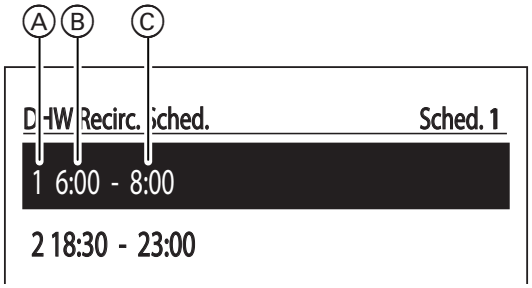

Legend

Ⓐ - no. of time frame according to schedule (max 5)
Ⓑ - start time of recirculation pump operation
Ⓒ - finish time of recirculation pump operation

- ☑ accept
- ☒ delete

Space Cooling Time Schedule

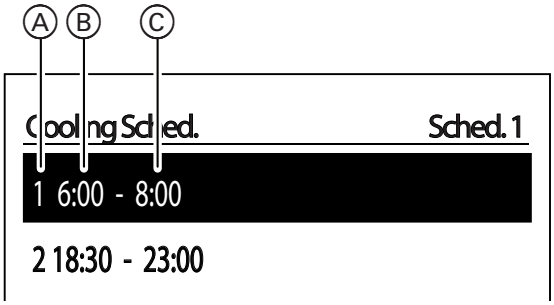

Legend

Ⓐ - active time frame (max. 5)
Ⓑ - cooling function start time
Ⓒ - cooling function completion time

- ☑ accept
- ☒ delete

In daily schedule the DHW Recirculation a defined starting time Ⓑ and finishing time Ⓒ of operating the DHW recirculation pump. Outside defined time frames the DHW recirculation pump will not be active.

In daily schedule the Space Cooling has a defined starting time Ⓑ and finishing time Ⓒ of Space Cooling. Outside defined time frames the Space Cooling will not be active.

Adjusting the time schedule

1. Select chosen program number and press navigation dial. The first parameter flashes (start time).
2. Use the navigation dial to set the new time frame value (hour and minutes separately) by turning the dial, and confirm it by pressing the dial.
3. Repeat the process for finishing time.
4. Use the navigation dial to select the command column. To save changes select ☑ command and press the dial to finish editing. To delete selected time frame select command ☒ and press the dial.
5. To add new time frame, select last defined time frame and by pressing the dial go to command position, select command ⊞ and press the dial to add new time frame (edition of new time frames described above).

The entire day program is saved in the controller's memory when you exit the day program by pressing the "Save and end" command.

DHW Tank Hygiene Function

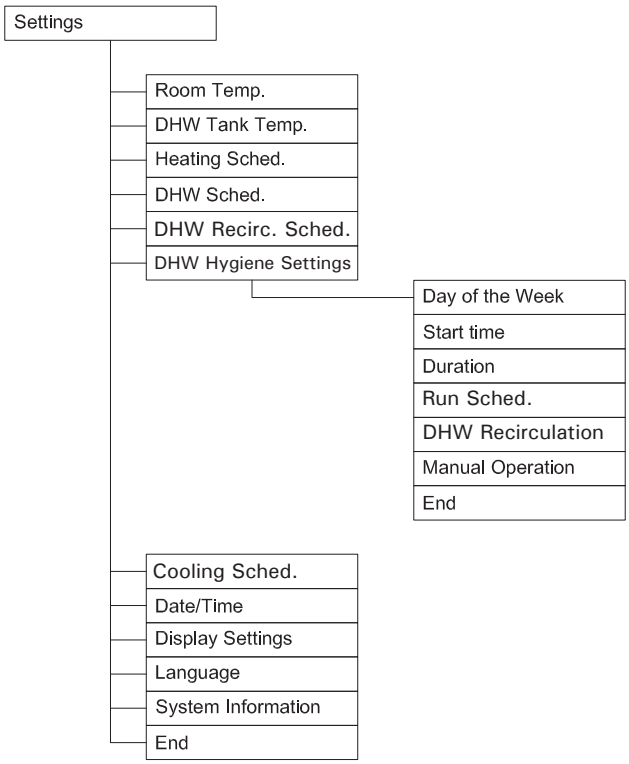

DHW Hygiene function is only available in systems with installed indirect DHW storage tanks.
You can heat the water in the DHW tank to above 140°F (60°C) once a week for an hour on the selected day. This function is regularly carried out at the specified time.

The following parameters can be set for operation of the tank cleansing function;

- Day of the week: the day of the week (Monday - Sunday) hygiene function operates
- Start time: Time of the selected day of the week the hygiene function will run.
- Duration: additional runtime of the hygiene function in minutes (5 to 30 additional minutes), for hygiene functions being carried out according to the schedule, not available to hygiene functions started manually.
- Run Sched.: Select 'Yes' to have the hygiene function run automatically on the select time and day of the week. Select 'No' for no hygiene function.
- DHW recirculation: DHW recirculation pump is active during hygiene function
- Manual Operation: Manual start of hygiene function, which will terminate when the working time has expired.

Scroll through the menu with the navigation dial and press the navigation dial to select. When complete select 'End' to return to the settings menu.

⚠ WARNING

High DHW temperatures can cause scalding, e.g. if the DHW temperature is above 140°F (60°C). Mix with cold water at the draw-off points.

Setting Time and Date

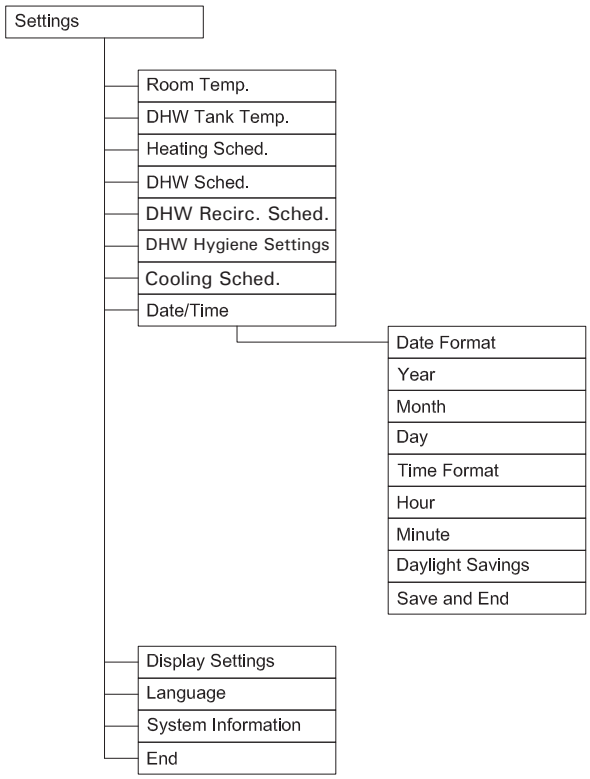

The following parameters can be set for time and date;

- Date Format
- Year
- Month
- Day
- Time Format
- Hour
- Minute
- Daylight Savings: When set to 'Yes' Controller automatically switches over for daylight savings, when set to 'No' Controller does not automatically switch over for daylight savings

Scroll through the menu with the navigation dial and press the navigation dial to select. When complete select 'Save and End' to return to the settings menu.

Adjusting the Interface

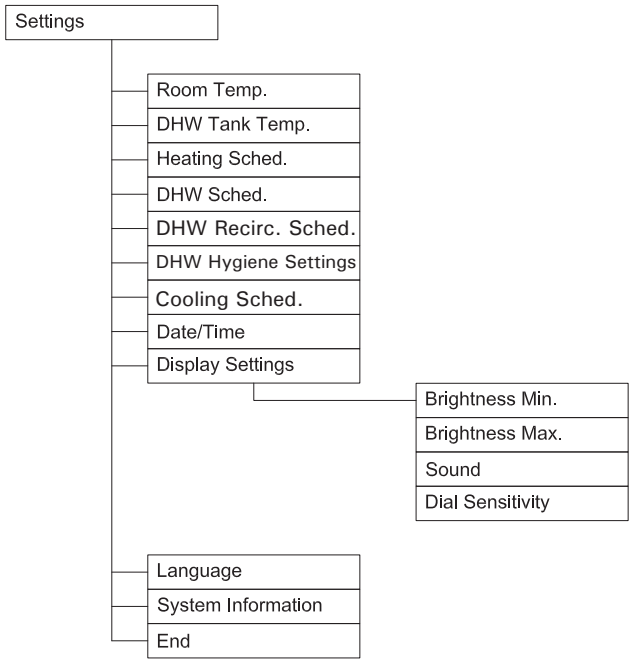

The following parameters can be set for the interface;

- Brightness Min: setting of the brightness of the display in stand-by mode.
- Brightness Max: setting of the brightness of the display while interacting with the IDU.
- Sound: When set to 'Yes' rotating the dials will generate a sound, when set to 'No' there is no sound generated when rotating the dials.
- Dial Sensitivity: sets how fast or how slow the cursor will scroll through menu items.

Scroll through the menu with the navigation dial and press the navigation dial to select. When complete select 'End' to return to the settings menu.

Setting the Language

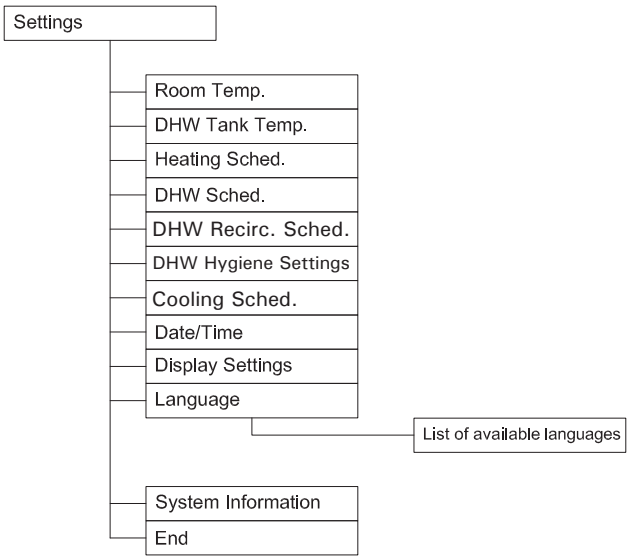

The following languages are available;

- English
- French (Canadian)
- Spanish
- Polish

Scroll through the menu with the navigation dial and press the navigation dial to select.

System Information

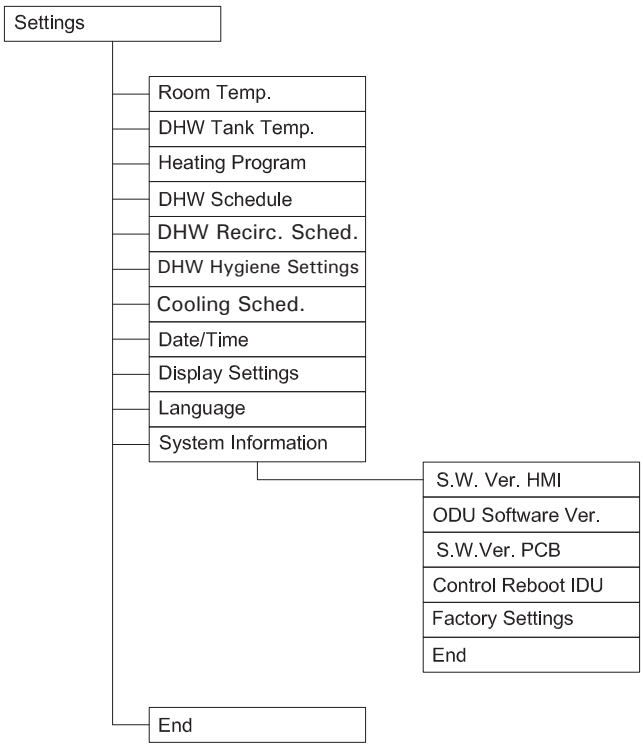

The following system information can be displayed;

- S.W. Ver. HMI: shows the software version of the IDU interface
- ODU Software Version
- S.W. Ver. PCB: shows the software version of the control board
- Control Reboot IDU: Restart of the IDU
- Factory Settings: Restores the heatpump to factory settings

Scroll through the menu with the navigation dial and press the navigation dial to select. When complete select 'End' to return to the settings menu.

Time Schedule Override

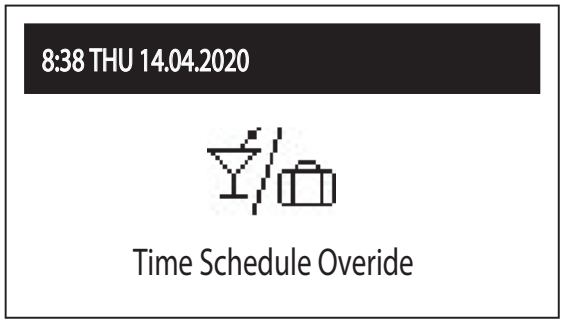

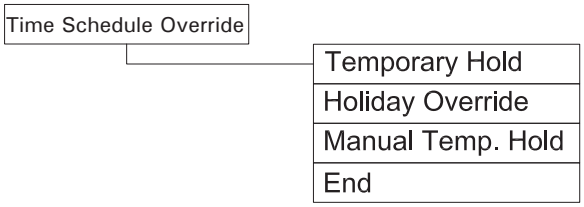

Time Schedule Override modes override the set time schedule for a selectable amount of time.

Note: The symbol of the activated mode is indicated on the home screen. Refer to “Display Symbols and Indications” on page 50 for description of symbols.

Manual activation of extended operating conditions;

- Temporary Hold: setting the duration of the mode (from 1 to 24 hours or until cancelled).
- Holiday Override: setting the duration of the mode (from 1 to 60 days or until cancelled).
- Manual Temp. Hold: room temperature setting implemented by the control system: until cancelled.

Note: If any of the modes above is activated, it is possible to deactivate it after entering “Time Schedule Override”.

Scroll through the menu with the navigation dial and press the navigation dial to select.

Service/Configuration Menu

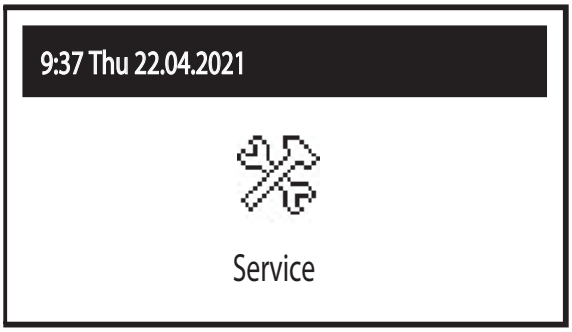

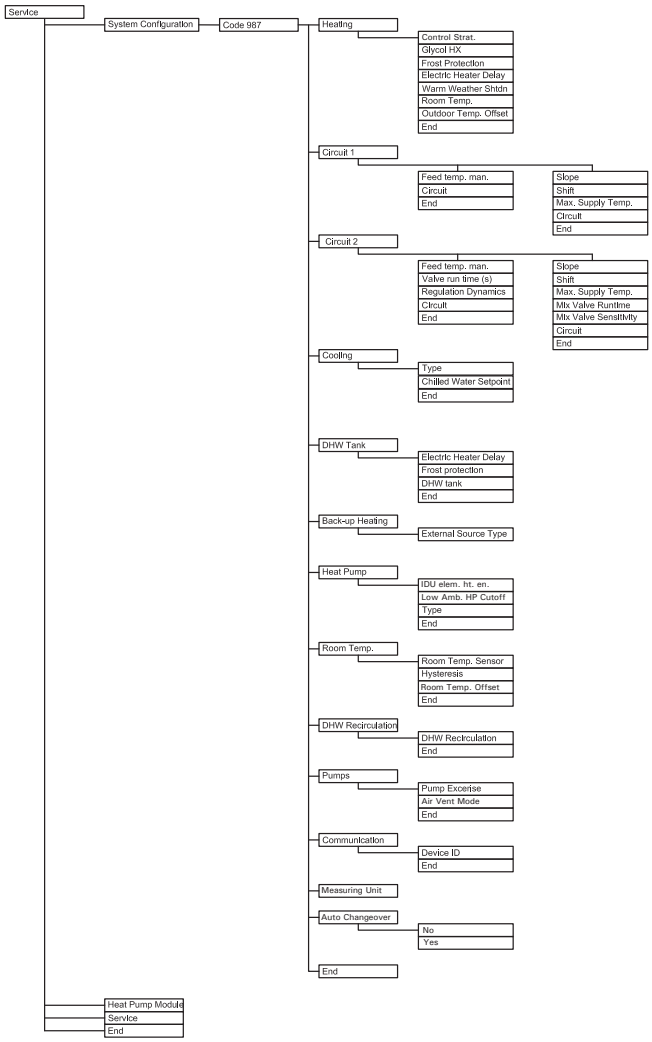

Changes in the configuration menu are possible after entering an access code. When prompted for an access code, turn the navigation dial to the required code and confirm the code by pressing the dial. If you want to exit from the code request screen, hold the navigation dial or wait until automatic return to main function screen.

Code: 987

Scroll through the menu with the navigation dial and press the navigation dial to select. When complete select 'End' to return to the Service menu.

Heating:
Control Strat.:

- Curve - Temperature is calculated on the basis of outside temperature and room temperature based on schedule.
- Constant Temperature - Fixed Setpoint Temperature, set individual for Circuit 1 and Circuit 2.

Glycol Loop Heat Exchanger:
When this function is enabled, the Glycol Pump Output (PGC) will activate any time that the IDU internal pump is running.

- Yes - there is an additional heat exchanger in the system
- No - there is no additional heat exchanger in the system.

Frost protection:

- Yes - if the temperature in the building drops below 45°F (7°C) in the stand-by mode and the outside temperature is lower than 36°F (2°C), heating will be turned on ,
- No - protection is disabled.

Electric Heater Delay:
This parameter defines the time after which the heat pump activates the integrated heater of the indoor unit. Timer begins with activation of outdoor unit compressor.

Service/Configuration Menu

Warm Weather Shutdown:
When the outside temperature exceeds the setpoint temperature, all space heating is disabled. DHW will continue to operate, if configured.

Outside temp. offset:
Calibration of the displayed outside temperature value.
The user selected offset value will be added to the actual outdoor temperature.

Circuit 1 and Circuit 2:
Parameters in this menu allow the user to adjust the operating conditions of the connected heating circuits.
Note: Heating circuit 1 is intended for heating connection to a high temperature circuit;

- Slope: Selection of a heating curve (see "Adjusting the Heating Curve" on page 65 to for instructions on adjusting the slope). Note: The parameter is present when the control is set according to heating curve (Adjust regulation type to: Curve).
- Shift: Heating curve shift (see "Adjusting the Heating Curve" on page 65 to for instructions on adjusting the shift) Note The parameter is present when the control is set according to heating curve (Adjust regulation type to: Curve).
- Fixed Setpoint Temperature: supply temperature when operating with constants parameters (manual setting of the heating medium) [Configuration -> Heating -> Control Strategy: Fixed setpoint temperature],
- Temp. MAX: maximum supply temperature of the heating circuit.

ATTENTION: setting room temperatures which are not suitable for the building characteristics, type of heat emitters used and degree of building insulation will increase operating costs

- Circuit

Yes - activation of the Circuit 1,
No - turning off the circuit.

- Mixing valve runtime (only available for Circuit 2): time needed to switch the valve by 90 degrees. Adjustment range from 60 to 480 seconds, factory default 120 seconds. During configuration, please check the set value with the value of the valve drive used.
- Mixing valve sensitivity: the response speed of the valve drive to achieve the corresponding parameter in the Circuit 2.

Cooling:

- Off: cooling function inactive, Fan coil, Radiant Cooling. For radiant and slab cooling a third party controller is required.
- Chilled water setpoint: temperature of the chilled water.

If using the VCH output Note:
Cooling mode must be set to "Fan Coil" for VCH to switch positions corresponding with manual change of the seasonal dial (heating mode / cooling mode)
If cooling mode is set to "Radiant Cooling" then the VCH output will remain permanently in the heating position regardless of seasonal dial change.

If using Radiant Cooling:
If radiant cooling is enabled then HC2 must also be enabled and sensor THC2 connected.

Radiant Cooling with room temperature sensor:
ODU will generate chilled water until room temperature has been satisfied, chilled water temperature in the system may be lower than the chilled water temperature setpoint. IDU pump will stop between cooling calls.

Radiant Cooling without room temperature sensor:
ODU will generate chilled water to the set chilled water temperature setpoint. IDU pump will run continuously.

⚠ IMPORTANT

Chilled water can lead to condensation forming on pipes and emitters, ensure that appropriate measures are taken to prevent damage due to condensation.

Service/Configuration Menu

DHW Tank:

- Electric Heater Delay: This parameter defines the time after which the heat pump activates the integrated electric heat element of the indoor unit. Timer begins with activation of outdoor unit compressor.
- Frost protection:

Yes - activation of the DHW tank frost protection in stand-by mode,
No - function inactive.

- DHW Tank:

Yes - DHW tank connected.
No- DHW tank not connected.

Room temperature:

- Room Temperature Sensor: room temperature control.

Yes - heating will be switched off once the set room temperature read by the room temperature sensor has been reached

No - Disables sensor fault if no room temperature senor is connected.

Note:
If 'No' is selected and a room temperature sensor is connected, the system will operate on room temperature setpoint.

- Hysteresis: room temperature hysteresis when Room Control is activated
- Room Temp. Offset: calibrates the value of the indicated room temperature. The parameter is added or subtracted from the value measured depending on the sign.

DHW Recirculation:
Yes - DHW recirculation pump active and operating based on set time schedule.
No - DHW recirculation pump turned off.

Pumps:

- Pumps exercise: brief pump operation to prevent pump seizing

- Air vent mode: During the venting procedure (10 min.) the indoor unit pump runs alternately at maximum and minimum speed, during this procedure the circuit pumps are on. This allows for the concentration of air bubbles, which makes it easier to remove air from the installation.

Off - system air purging turned off.

Circuit 1 - Heating circuit 1 purging enabled.

Circuit 2 - Heating circuit 2 purging enabled.

Communication:

- Device ID: device number on the communication system.

Auto Changeover:

When enabled, the system will switch modes via the field supplied thermostat, without requiring operating mode changeover on the Indoor Unit.

Service/Configuration Menu

Back-up Heating:

Back-up heating refers a back-up heat source (such as a gas boiler) integrated into the system. The back-up heating activation output (OUT) - dry contact - is active (closed) when the outdoor temperature is less than the set point of the 'IDU Elem. Ht. En.' setting. The output is deactivated when the outdoor temperature is 1.8°F (1°C) above the set point temperature for low ambient heat pump cutoff.

The heat pump:

- Indoor unit heating element enable: the limiting outdoor temperature up to which the heat pump operates autonomously. Below this point, the internal electric heating element is activated after a time delay. The outside temperature is set using 'IDU Elem. Ht. En.' above this setpoint only the ODU will operate to satisfy the call. When the outside temperature falls below this set point both the ODU and the integrated electric heat element of the IDU will be active. Setting range from -4 to 50°F (-20 to 10°C).
- Low ambient heat pump cutoff: the limit outdoor temperature at which the heat pump will shut down. If heating is required for central or DHW heating, the internal electric heating element of the indoor unit will be the only heat source, unless the Back-up Heating setting is enabled. The Back-up Heating setting would enable a connected appliance (such as a gas boiler), disabling the integrated electric heat element of the IDU from further heating. Setting range from -13 to 14°F (-25 to -10°C).
- Outdoor unit model: Model of the connected Outdoor unit.

Outdoor Temperature	ODU (Compressor)	IDU Electric Element in System Without Back-up Heating
Above IDU Elem. Ht. En. Setting	ON	OFF
Below IDU Elem. Ht. En. Setting	ON	ON
Below Low Amb. Cut Off Setting	OFF	ON

Outdoor Temperature	ODU (Compressor)	IDU Electric Element in System With Back-up Heating	System with Back-up Heating call
Above IDU Elem. Ht. En. Setting	ON	OFF	OFF
Below IDU Elem. Ht. En. Setting	ON	ON	OFF
Below Low Amb. Cut Off Setting	OFF	OFF	ON

Service/Configuration Menu

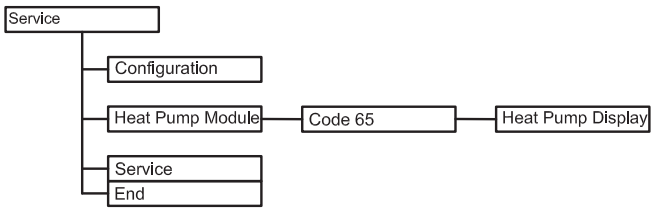

Heat Pump Module:
This menu provides access to view heat pump operating conditions. When prompted for an access code, turn the navigation dial to the required code and confirm the code by pressing the dial. If you want to exit from the code request screen, hold the navigation dial or wait until automatic return to main function screen.

Code: 65

Scroll through the menu with the navigation dial and press the navigation dial to select. When complete select 'End' to return to the Service menu.

Parameters

Address	Description	Default Setting	Settings Range
S12	Duration of defrost cycle	10 minutes	1-12 Minutes
S13	Entering temperature of defrost water	13°C (55°F)	0-30°C (32-86°F)
S14	Defrost intervals	45 Minutes	30-90 Minutes
S90	Minimum compressor frequency	30 Hz	Do Not Adjust
S91	Maximum compressor frequency	90 Hz	Do Not Adjust
S94	ODU Model	Dependant on model	Do Not Adjust

The default settings of addresses S12, S13, and S14 ensure reliable and economical operation of the heat pump, however in areas of heavy snow fall addresses S12 and S13 can be increased and S14 decreased when standard defrost settings are determined to not be sufficient.

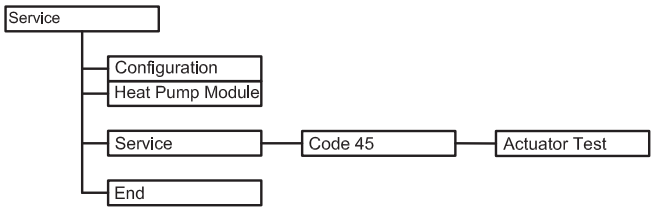

Service:
This menu accesses the actuator test function for the IDU. When prompted for an access code, turn the navigation dial to the required code and confirm the code by pressing the dial. If you want to exit from the code request screen, hold the navigation dial or wait until automatic return to main function screen.

Code: 45

Scroll through the menu with the navigation dial and press the navigation dial to select. When complete select 'End' to return to the Service menu.

Adjusting the Heating Curve

Setting the Heating Curve Slope

The purpose of the heat pump controller is to maintain the temperature in the central heating system depending on the outdoor temperature. When the temperature outside the building is low, the need for heat is greater, whereas if the temperature outdoors is high, there is no need to maintain a high temperature in the system. The relationship between the outdoor temperature and the temperature of the central heating system can be represented in the form of a graph, the heating curve. The figure shows a family of heating curves for a room temperature set point of 72°F (22°C). Depending on the characteristics of the building, the climate zone and the heating system type, a suitable curve needs to be selected.

Adjusting the Slope

From the Circuit 1 and Circuit 2 configuration menus:

1. Use the navigation dial to select the desired heating circuit and press the dial to select.
2. Use the navigation dial to select 'Slope' and press the dial to select 'Yes'

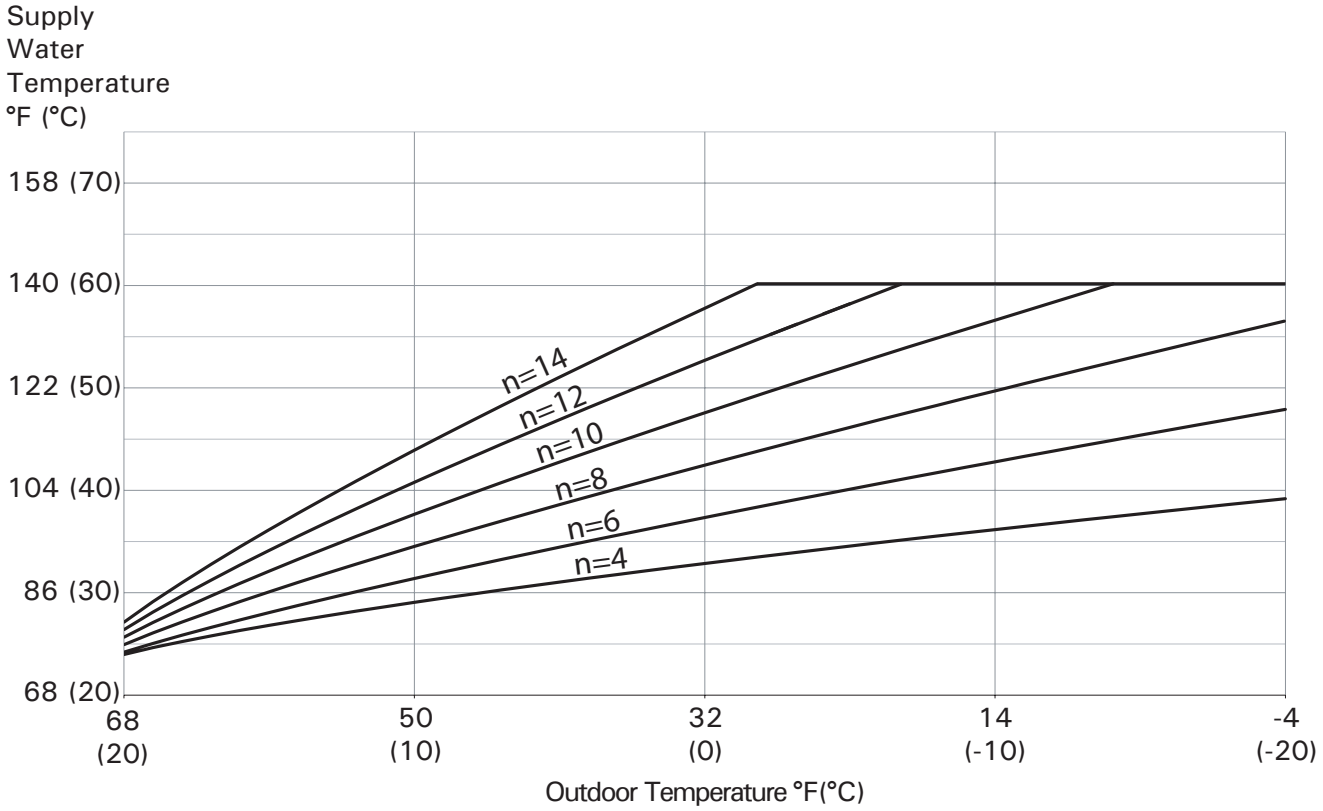

Adjusting the Heating Curve

Setting the Heating Curve Shift

If the curve needs to be shifted, change the [shift] parameter. The figure shows as an example curve no. 8 with a shift of -14°F and 50°F (-10°C and 10°C).

Adjusting the Shift

From the Circuit 1 and Circuit 2 configuration menus:

1. Use the navigation dial to select the desired heating circuit and press the dial to select.
2. Use the navigation dial to select 'Shift' and press the dial to select 'Yes'

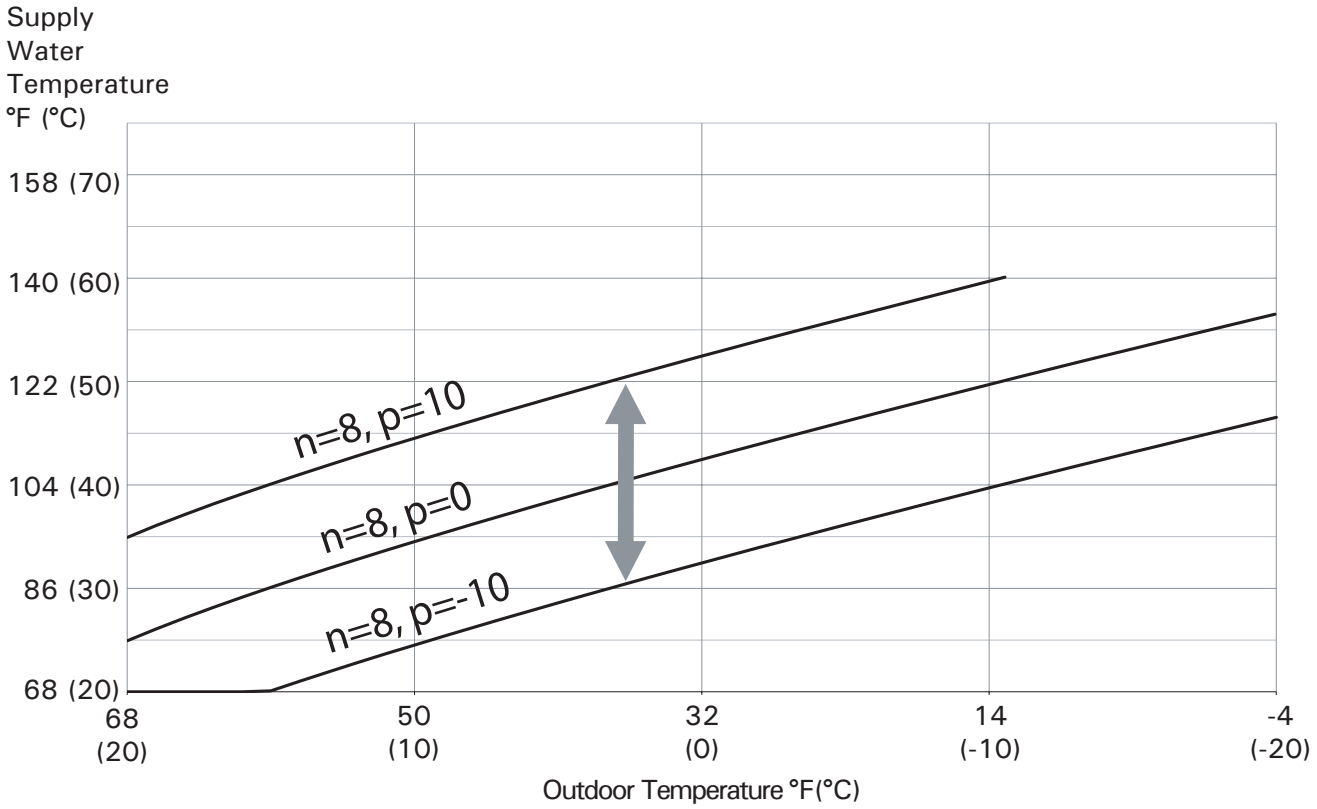

Tips on setting the heating curve

Course of heating	Actions concerning the "heating curve"
During cold seasons, it is too cold indoors.	Set the shift to the next higher value.
During cold seasons, the rooms are too warm.	Set the shift to the next lower value.
During transitional and cold seasons, it is too cold indoors.	Set the slope to a higher value.
During transitional and cold seasons, the rooms are too warm.	Set the slope to a lower value.
It is too cool indoors in transitional seasons, yet it is warm enough in cold seasons.	Set the shift to the next lower value and the slope to a higher value.
It is too warm indoors in transitional seasons, yet warm enough in cold seasons.	Set the shift to the next higher value and the slope to a lower value.

Troubleshooting

Rooms are too cold

Cause	Corrective Action
The heat pump is switched off.	■ Switch on the power switch ■ Switch on the main switch (if installed, outside the mechanical room). ■ Switch on the fuse in the electrical switchboard (the house fuse).
The settings on the heat pump controller have been altered or are incorrect.	■ Space heating/cooling must be activated. Check and correct the following settings if necessary: ■ Work program ■ Heating curve ■ Room temperature ■ Time ■ Time program for space heating/cooling ■ Run additional electric heating for space heating, if necessary
Heating of DHW in progress	■ Wait until the DHW heated up. ■ If necessary, reduce the hot water intake or, temporarily, the normal hot water temperature.
The display shows “Warning” or “Fault”.	■ Read out the type of notification. Confirm the notification. ■ If necessary, contact an authorized contractor

Rooms are too hot

Cause	Corrective Action
The settings on the heat pump controller have been altered or are incorrect.	Space heating/cooling must be activated. Check and correct the following settings if necessary: ■ Work program ■ Room temperature ■ Heating curve/cooling temperature ■ Time ■ Time program for space heating/cooling ■ Activate the “active cooling mode” if necessary
The display shows “Warning” or “Fault”.	■ Read out the type of notification. Confirm the notification. ■ If necessary, contact an authorized contractor

No Domestic Hot Water

Cause	Corrective Action
The heat pump is switched off.	■ Switch on the power. ■ Switch on the main switch (if installed, outside the mechanical room). ■ Switch on the fuse in the electrical switchboard (the house fuse).
The settings on the heat pump controller have been altered or are incorrect.	DHW heating must be started. Check and correct the following settings if necessary: ■ Space heating or cooling time program ■ DHW Temperature setpoint. ■ DHW Time Program ■ Time setting ■ Run additional electric heating, if necessary, to heat DHW
The display shows “Warning” or “Fault”.	■ Read out the type of notification. ■ If necessary, contact an contact heating contractor.

Troubleshooting

Domestic Hot Water is too hot

Cause	Corrective Action
The settings on the heat pump controller have been altered or are incorrect.	Check and, if necessary, correct the DHW setpoint temperature.

Warning

Cause	Corrective Action
Warning concerning special occurrence, operating condition of heat pump, heating system	If necessary, contact heating contractor.

Fault

Cause	Corrective Action
Fault in heat pump or in heating system	If necessary, contact heating contractor.

Fault Codes Indoor Unit

Fault Code	Cause
Temp. HC2	Circuit 2 temperature sensor error
Cooling temp.	Cold buffer temperature sensor error
DHW Tank Temp.	DHW tank temperature sensor error
Room Temp.	Room temperature sensor error
Outlet Temp.	Outlet temperature sensor error
Inlet Temp.	Return temperature sensor error
Press. Sensor	System pressure sensor error indoor unit
Temp. HC1	Circuit 1 temperature sensor error
Outside Temp.	Outside temperature sensor error
Low Battery	Battery to be replaced
IDU Pump	Indoor unit internal circulation pump error in indoor unit
Heat Pump Module	Heat pump error - outdoor unit
Low Pressure	Low pressure of the heating medium
Communication	Communication error indoor unit to outdoor unit
Thermal Cut-off	Fixed high limit switch triggered indoor unit
HP Inlet Temp.	Inlet temperature sensor error - outdooor unit
HP Outlet Temp.	Outlet temperature sensor error - outdoor unit
Curves Config. Error	Heating curves configuration error
Circuit Config. Error	Error in the configuration of the heating circuits
HP Low Pressure	Outdoor unit low refrigerant pressure

Fault Codes Outdoor Unit

Fault	Description	Cause	Diagnosis	Corrective Actions
E10 - E11	Reserved			
E12	Heating return temp sensor failure	1. Open or short circuit of heating return water temperature sensor 2. Damage of heating return water temperature sensor	1. Check the connection and resistance of the heating return water temperature sensor 2. The heating return water temperature sensor is damaged	1. Reconnect the sensor; 2. Replace the heating return water temperature sensor
E13	Heating outlet water temp sensor failure	1. Open or short circuit of heating outlet water temperature sensor 2. Damage of heating outlet temperature sensor	1. Check the connection and resistance of the heating outlet water temperature sensor 2. The heating outlet water temperature sensor is damaged	1. Reconnect the sensor; 2. Replace the heating outlet water temperature sensor

Fault Codes Outdoor Unit

Fault	Description	Cause	Diagnosis	Corrective Actions
E14	High pressure protection	1. High pressure switch is damaged or false connected;	1. Use multimeter to check whether the high pressure switch is closed after stopping for 3 minutes. If it is disconnected, check the connection of the high pressure switch. If it is still disconnected after checking the connection, it can be determined that the high pressure switch is damaged;	1. Reconnect the connecting line or replace the high pressure switch;
		2. Scaling of casing or plate heat exchanger; (Heating)	2. Check the scaling at the inlet and outlet of casing or plate heat exchanger, and observe the scaling on the inner wall. If the scaling is serious, it can be determined that the scaling causes heating high pressure protection;	2. Ask professionals to clean the casing or plate heat exchanger;
		3. The fins are dirty and blocked, and the ventilation is poor; (Cooling)	3. Check whether the fin return air channel is unobstructed and whether there is foreign body blockage;	3. Clean up dirty and blocked foreign bodies, and ask professionals to clean the fin heat exchanger;
		4. Abnormal throttling;	4. Check the opening of the electronic expansion valve, manually increase or decrease the opening of the electronic expansion valve, and observe whether the high and low pressure, suction temperature and exhaust temperature change. If not, it means that the electronic expansion valve is damaged or stuck or the coil is abnormal or the opening is small. If there is any change, check whether it is dirty before throttling after eliminating reasons 1. 2. 3, 5 and 6;	4. Replace throttle valve or coil and filter;
		5. The outlet water temperature is on the high side;	5. Check the set temperature, especially when the set temperature is close to the limit water temperature, check whether the detected value of outlet water temperature before fault is lower than the actual temperature by more than 4°F(2°C);	5. Fill thermally conductive silicone and insulate with a heat-insulating sleeve;
		6. Excessive refrigerant charge.	6. Connect the pressure gauge, start up for heating after fault recovery, then read the high pressure and antifreeze temperature of refrigerant exchange circuit before fault, convert the high pressure into condensation temperature, and calculate the condensate depression = condensation temperature-antifreeze temperature of refrigerant exchange circuit. If the condensate depression is > 50°F(10°C), it can be determined that the refrigerant is overcharged. If there is no abnormality, please contact professional technician further.	6. According to the charging amount on nameplate, re-evacuate and hold pressure, and then charge the refrigerant
E15	Reserved			

Fault Codes Outdoor Unit

Fault	Description	Cause	Diagnosis	Corrective Actions
E16	Low pressure protection	1. Refrigerant leakage in the system;	1. Connect the pressure gauge and observe the refrigerant pressure during shutdown. If it is 0, it means that the refrigerant has leaked out. If it is greater than 0, proceed to the next step;	1. Perform repair welding, pressure holding, evacuating, and charge refrigerant according to the amount on nameplate;
		2. Bad connection or damage of low pressure switch;	2. Use a suitable leak detector and examine for leaks, if leaks are found, repair the leak. If no leaks are found, check the compressor current and temperature difference between inlet and outlet water are low after starting up. If so, start the ODU to heat up after re-evacuating and charging. If there is no abnormality after re-charging refrigerant, it means that the machine lacks refrigerant. If low-pressure protection still occurs, proceed to the next step;	2. Fasten the connection of the pressure switch or replace the pressure switch;
		3. Poor defrosting;	3. Connect the pressure gauge and observe whether the pointer of the pressure gauge reaches the disconnection value range of the low pressure switch before the machine fails. If not, check whether the connection of the low pressure switch is loose and whether the pressure switch is damaged. If so, proceed to the next step;	3. Perform manual defrosting, then adjust defrosting setting parameters, shorten heating cycle, extend defrosting time, increase set water temperature, etc.;
		4. The fins are dirty and blocked, and the ventilation is poor;	4. Check whether the fins are seriously frosted. If so, observe whether the ODU will still be protected under low pressure after manual defrosting. If it runs normally, it will be caused by poor defrosting. If it will still be protected under low pressure, proceed to the next step;	4. Clean the fins to remove dirt and debris;
		5. Abnormal throttling;	5. Check whether the ventilation of the fins is not smooth and whether there are too many impurities and dirt. If so, it can be determined that the fins are dirty and blocked. If not, proceed to the next step;	5. Replace or tighten the coil of the electronic expansion valve, replace the valve body of the electronic expansion valve;
		6. System blocking;	6. Check whether the coil and body of the electronic expansion valve are fixed firmly, whether the connection between the coil and the main board is loose, etc. After checking, start up for heating, if low pressure protection still works, proceed to the next step; 7. Knock the body of the electronic expansion valve for several times, and turn on the machine for heating again. If the heating is normal, the electronic expansion valve is stuck. If low pressure protection still works, proceed to the next step; 8. Discharge the refrigerant in the system and remove the filter for inspection. If there is dirty blockage, it means that the filter blockage leads to low pressure protection. If the filter is normal, please further contact professional technicians for handling.	6. Weld to remove the filter, clean up the impurities in the filter before throttling or replace the filter.
E17	Reserved			

Fault Codes Outdoor Unit

Fault	Description	Cause	Diagnosis	Corrective Actions
E18	Water flow protection	1. Water pump failure;	1. Check whether the water pump is running and observe whether the indicator light of the water pump is faulty;	1. Troubleshoot the pump or replace the pump;
		2. The water system is not completely emptied and still contains gas;	2. Check the exhaust valve at the top of the water system, open it, and observe whether there is intermittent gas discharge;	2. Open the high point exhaust valve of the system and completely empty it;
		3. The resistance of water system is too large;	3. Check the length of circulating water circuit and elbow valve, and calculate water resistance;	3. Calculate and check the water resistance of water circuit system. If the water resistance is too large, add a secondary pump;
		4. The valves of the water system are not fully opened;	4. Check whether all valves in the water system that should be opened have been opened;	4. Check all valves in the water circuit, and all the valves that should be opened should be opened;
		5. The water circuit filter is dirty and blocked;	5. Check whether the water circuit filter is dirty and blocked with too many impurities;	5. Clean the water circuit filter to remove impurities;
		6. The water flow switch is false connected or damaged;	6. Check whether the connection of the water flow switch is loose, and check whether the contact of the water flow switch is normally closed and disconnected normally with a multimeter. If there are still problems after the above troubleshooting steps, please contact professional technicians further for handling.	6. Check the connection and tighten it again. If the water flow switch is abnormally on or off after the connection has been troubleshot, replace the water flow switch.
E19	Electric heating overload protection	1. Electric heating without load;	1. Check whether there is water in the water system, and if so, proceed to the next step;	1. Fill the water system with water;
		2. Insufficient water flow;	2. Check whether the water flow is too low. If the water flow is low, check the reasons for the low water flow. Refer to the troubleshooting methods 1 ~ 5 of “Water Flow Switch Protection”. If the water flow is normal, proceed to the next step;	2. Refer to methods 1 ~ 5 of “Water Flow Switch Protection”;
		3. The electric heating overload protection switch is false connected or damaged.	3. Check whether the overload protection switch is closed in the shutdown state. If it is opened, check whether the connection is false. If there is no abnormality in the connection, the overload protection switch is damaged. If it is closed, please further contact professional technicians for handling.	3. Fasten the connecting wire of overload protection switch, replace the overload protection switch or replace the electric heating assembly.
		4. False connection of jumper of electric heating overload protection terminal strip		
E110	Primary anti-freeze protection	Inlet water temperature too low	Outdoor Unit in standby	Wait for inlet water temperature to increase
E111	Secondary anti-freeze protection	Inlet water temperature too low	Outdoor Unit in standby	Wait for inlet water temperature to increase

Fault Codes Outdoor Unit

Fault	Description	Cause	Diagnosis	Corrective Actions
E112	Anti-freeze protection	1. Insufficient water flow; 2. The outlet water temperature is too low	1. Check whether the water flow is low. If it is low, refer to the troubleshooting methods 1 ~ 5 of “Water Flow Switch Protection”. If the water flow is normal, proceed to the next step; 2. Check whether the outlet water temperature before protection is too low, if so, increase the set value of water temperature, if not, proceed to the next step; 3. If there are still problems after the above troubleshooting steps, please contact professional technicians further for handling.	1. Refer to the solutions 1 ~ 5 of “Water Flow Switch Protection”; 2. Raise the set water temperature;
E113	Reserved			
E114	Room temp failure	1. Open circuit or short circuit of room temperature sensor 2. Damage of room temperature sensor	1. Check the connection and resistance of the room temperature sensor 2. The room temperature sensor is damaged	1. Reconnect the sensor; 2. Replace the room temperature sensor
E115	Reserved			

Fault Codes Outdoor Unit

Fault	Description	Cause	Diagnosis	Corrective Actions
E20	Exhaust temperature overprotection	1. Lack of refrigerant in the system;	1. Connect the pressure gauge and observe the refrigerant pressure during shutdown. If it is 0, it means that the refrigerant has leaked out. If it is greater than 0, proceed to the next step;	1. Recharge refrigerant;
		2. Scaling of casing or plate heat exchanger;	2. Use leak detector for leak detection. If leakage points are detected, repair is required. If no leakage points are detected, check whether the compressor current and temperature difference between inlet and outlet water are low after starting up. If so, start the machine for heating after re-evacuating and charging. If there is no abnormality after re-charging refrigerant, it means that the machine lacks refrigerant. If exhaust protection still occurs, proceed to the next step;	2. Please ask professionals to carry out descaling;
		3. Fin frosting is serious;	3. Check for scaling at the inlet and outlet of casing or plate heat exchanger, and observe the scaling on the inner wall. If the scaling is serious, the machine can be turned on for heating only after descaling, and if there is still a fault, proceed to the next step;	3. Manual defrosting and appropriate adjustment of defrosting setting parameters;
		4. The fins are dirty and blocked, and the ventilation is poor;	4. Check whether the fins are seriously frosted. If so, observe whether the machine will still be protected under low pressure after manual defrosting. If it runs normally, it means that the problem is caused by poor defrosting. If it will still be protected under low pressure, proceed to the next step;	4. Please ask professionals to clean up the dirty blocked fins;
		5. Abnormal throttling;	5. Check whether the fin return air channel is unobstructed and whether there is foreign body blockage;	5. Replace the body or coil of the electronic expansion valve;
		6. The outlet water temperature is on the high side;	6. Check whether the coil and body of the electronic expansion valve are fixed firmly, whether the connection between the coil and the main board is loose, etc. After checking, start up for heating, and if low pressure protection still works, proceed to the next step;	6. Replace the sensor or take heat preservation and conduction measures or move the sensor to a suitable position or reduce the water temperature setting value;
		7. System blocking;	7. Knock the body of the electronic expansion valve for several times, and turn on the machine again for heating. If the heating is normal, the electronic expansion valve is stuck. If low pressure protection still works, proceed to the next step; 8. Check the deviation between the detected value of water temperature and the actual value. If it is much lower, it is necessary to replace the sensor or take heat preservation and conduction measures or move the sensor to a suitable position; 9. Discharge the refrigerant in the system and remove the filter for inspection. Replace it if there is blockage by dirt or clean it up and start up for trial run. If it runs normally, the problem will be solved.	7. Replace the filter or clean up the dirty blocked filter.

Fault Codes Outdoor Unit

Fault	Description	Cause	Diagnosis	Corrective Actions
E21 - E22	Reserved			
E23	Fan 1 overload speed limit	1. The parameter setting is incorrect; 2. Incorrect connection of fan; 3. The fan speed driver board is damaged	1. Check whether the fan selection parameters are correct; 2. Check the fan connection according to the circuit diagram, and see whether the connection is correct and whether the contact is poor; 3. The fan speed driver board is damaged;	1. Check and reset the fan selection parameters; 2. Reinforce the input terminal of the fan; 3. Replace the fan speed driver board;
E24	Fan 2 overload speed limit	1. The parameter setting is incorrect; 2. Incorrect connection of fan; 3. The fan speed driver board is damaged	1. Check whether the fan selection parameters are correct; 2. Check the fan connection according to the circuit diagram, and see whether the connection is correct and whether the contact is poor; 3. The fan speed driver board is damaged;	1. Check and reset the fan selection parameters; 2. Reinforce the input terminal of the fan; 3. Replace the fan speed driver board;
E25	The temp difference of inlet water and outlet water exceeded	1. Insufficient water flow;	1. Check whether the water flow is low. If it is low, refer to the troubleshooting methods 1 ~ 5 of “Water Flow Switch Protection”. If the water flow is normal, proceed to the next step; 2. Check whether the ambient temperature is greater than 86°F (30°C). 3. If there are still problems after the above troubleshooting steps, please contact professional technicians further for handling.	1. Refer to troubleshooting methods 1 ~ 5 of “Water Flow Switch Protection”;
E26	Outlet water over heat	1. Insufficient water flow; 2. Improper selection; 3. Terminal is not opened;	1. Check whether the water pump is running and observe whether the indicator light of the water pump is faulty; 2. Check the exhaust valve at the top of the water system, open it, and observe whether there is intermittent gas discharge; 3. Check the length of circulating water circuit and elbow valve, and calculate water resistance; 4. Check whether all valves in the water system that should be opened have been opened; 5. Check whether the water circuit filter is dirty and blocked with too many impurities;	1. Troubleshoot the pump or replace the pump; 2. Open the high point exhaust valve of the system and completely empty it; 3. Calculate and check the water resistance of water circuit system. If the water resistance is too large, add a secondary pump; 4. Check all valves in the water circuit, and all the valves that should be opened should be opened; 5. Clean the water circuit filter to remove impurities;

Fault Codes Outdoor Unit

Fault	Description	Cause	Diagnosis	Corrective Actions
E27	Mixing outlet water temp sensor failure	1. Open circuit or short circuit of water mixer outlet water temperature sensor 2. Damage of water mixer outlet water temperature sensor	1. Check the connection and resistance of the water mixer outlet water temperature sensor 2. The water mixer outlet water temperature sensor is damaged	1. Reconnect the sensor; 2. Replace the water mixer outlet water temperature sensor
E28	Hot water return temp sensor failure	1. Open circuit or short circuit of hot return water temperature sensor 2. Damage of hot return water temperature sensor	1. Check the connection and resistance of hot return water temperature sensor 2. Hot return water temperature sensor is damaged	1. Reconnect the sensor; 2. Replace the hot return water temperature sensor
E29	Hot water outlet water temp sensor failure	1. Open circuit or short circuit of hot outlet water temperature sensor 2. Damage of hot outlet water temperature sensor	1. Check the connection and resistance of the hot outlet water temperature sensor 2. The hot outlet water temperature sensor is damaged	1. Reconnect the sensor; 2. Replace the hot outlet water temperature sensor
E210 - E215	Reserved			
E30 - E33	Reserved			
E34	High pressure protection 3 times	E14 Fault has occurred 3 times	Refer to E14	Requires manual reset of outdoor unit
E35	Reserved			
E36	Low pressure protection 3 times	E16 Fault has occurred 3 times	Refer to E16	Requires manual reset of outdoor unit
E37	Reserved			
E38	Water flow protection 3 times	E18 Fault has occurred 3 times	Refer to E18	Requires manual reset of outdoor unit
E39	Electric heating protection 3 times	E19 Fault has occurred 3 times	Refer to E19	Requires manual reset of outdoor unit
E310 - E311	Reserved			
E312	Anti-freeze protection 3 times	E112 Fault has occurred 3 times	Refer to E112	Requires manual reset of outdoor unit
E313 - E315	Reserved			
E40	Discharge over heat protection 3 times	Compressor discharge temperature is too high	Check refrigerant charge, defrosting performance, and four way valve operation	Requires manual reset of outdoor unit
E41	Reserved			
E42	The temp difference of inlet water and outlet water temp exceeded 3 times	E25 Fault has occurred 3 times	Refer to E25	Requires manual reset of outdoor unit
E43	The outlet water temp too low 3 times	E515 Fault has occurred 3 times	Refer to E515	Requires manual reset of outdoor unit

Fault Codes Outdoor Unit

Fault	Description	Cause	Diagnosis	Corrective Actions
E44	Outlet water over temperature protection 3 times	E26 Fault has occurred 3 times	Refer to E26	Requires manual reset of outdoor unit
E45 - E49	Reserved			
E410 - E415	Reserved			
E50	Inlet water temp failure	1. Open circuit or short circuit of inlet temperature sensor 2. Damage of inlet temperature sensor	1. Check the connection and resistance of the inlet temperature sensor 2. The inlet temperature sensor is damaged	1. Reconnect the sensor; 2. Replace the inlet temperature sensor
E51	Outlet water temp failure	1. Open circuit or short circuit of outlet temperature sensor 2. Damage of outlet temperature sensor	1. Check the connection and resistance of the outlet temperature sensor 2. The outlet temperature sensor is damaged	1. Reconnect the sensor; 2. Replace the inlet temperature sensor
E52	Coil temp failure	1. Open circuit or short circuit of temperature sensor of coil 1. 2. Damage of temperature sensor of coil 1	1. Check the connection and resistance of the temperature sensor 2. Coil 1 temperature sensor is damaged	1. Reconnect the sensor; 2. Replace the temperature sensor of coil 1
E53	Ambient temp failure	1. Open circuit or short circuit of environmental temperature sensor 2. Damage of environmental temperature sensor	1. Check the connection and resistance of the temperature sensor 2. The environmental temperature sensor is damaged	1. Reconnect the sensor; 2. Replace the environmental temperature sensor
E54	Suction temp failure		1. Check the suction pressure sensor connection	1. If the connection is OK, please replace a new one.
E55	Anti- freeze temp failure	1. Open circuit or short circuit of antifreeze temperature sensor 2. Damage of antifreeze temperature sensor	1. Check the connection and resistance of the antifreeze temperature sensor 2. Antifreeze temperature sensor is damaged	1. Reconnect the sensor; 2. Replace the antifreeze temperature sensor
E56	The coil outlet water temp sensor failure	1. Open circuit or short circuit of the coil outlet temperature sensor. 2. Damage of the coil outlet temperature sensor	1. Check the connection and resistance of the coil outlet temperature sensor 2. Coil outlet temperature sensor is damaged	1. Reconnect the sensor; 2. Replace the coil outlet temperature sensor
E57 - E58	Reserved			

Fault Codes Outdoor Unit

Fault	Description	Cause	Diagnosis	Corrective Actions
E59	EVI inlet temp failure	1. Open or short circuit of the EVI inlet temperature sensor 2. Damage of the EVI inlet temperature sensor	1. Check the connection and resistance of the EVI inlet temperature sensor 2. The EVI inlet temperature sensor is damaged	1. Reconnect the sensor; 2. Replace the EVI inlet temperature sensor
E510	EVI outlet temp failure	1. Open or short circuit of EVI outlet temperature sensor 2. Damage of EVI outlet temperature sensor	1. Check the connection and resistance of the EVI outlet temperature sensor 2. The EVI outlet temperature sensor is damaged	1. Reconnect the sensor; 2. Replace the EVI inlet temperature sensor is damaged
E511	Discharge temp failure	1. Open circuit or short circuit of exhaust temperature sensor 2. Damage of exhaust temperature sensor	1. Check the connection and resistance of the exhaust temperature sensor 2. Exhaust temperature sensor is damaged	1. Reconnect the sensor; 2. Replace the exhaust temperature sensor
E512	Reserved			
E513	System 1 pressure sensor failure	1. Open circuit or short circuit of pressure sensor 2. Damage of pressure sensor	1. Check the connection of the pressure sensor 2. Pressure sensor is damaged	1. Reconnect the sensor; 2. Replace the pressure sensor
E514	Low ambient temp failure	1. The ambient temperature is too low; 2. The ambient temperature sensor detection deviation is too large. 3. Check the installation space	1. Check whether the ambient temperature is too low; 2. Check whether the detected value by the temperature sensor is too much lower than the actual ambient temperature.	1. If the unit is beyond the operating range and cannot be started, it is recommended not to operate; 2. Replace the ambient temperature sensor or change the installation position of the temperature sensor.
E515	Outlet temp too low protection	1. Insufficient water flow; 2. Improper selection; 3.Terminal is not opened;	Refer to troubleshooting methods 1 ~ 5 of “Water Flow Switch Protection”	Refer to troubleshooting method 1 ~ 5 of Water Flow Switch Protection
E60 - E67	Reserved			
E68	Hot water temp failure	1. Open circuit or short circuit of the sensor.	1. Check the suction pressure sensor connection	1. If the connection is OK, replace with a new one.
E69	Reserved			
E610	Reserved			

Fault Codes Outdoor Unit

Fault	Description	Cause	Diagnosis	Corrective Actions
E611	Fan 1 failure	1. The parameter setting is incorrect;	1. Check whether the fan parameters are correct;	1. Check and reset the fan selection parameters;
		2. Abnormal connection	2. Confirm whether the position of communication connection is correct and loose according to the circuit diagram;	2. Plug and unplug terminals;
		3. Fan communication fault;	3. When electrifying, measure the voltage change between A and B ports of the main board with a multimeter. If there is basically no change, or the change is maintained at about 0.1V, the communication port is damaged;	3 Replace the main control panel;
		4. Communication fault;	4. Measure whether the voltage between the red line and the black line of the fan terminal on the fan driver board is 200-370V. If not, it means that the power supply is abnormal and there is something wrong with the fan module or the inverter driver board;	4. Replace the fan speed driver board or check the inverter driver board
		5.The fan module or inverter driver board is faulty;	5. Measure whether the voltage between the white line and the black line of the fan terminal on the fan driver board is 13.5-16.5V. If not, it means that the power supply is abnormal and there is something wrong with the fan module or the inverter driver board	5. Replace the fan speed driver board or check the inverter driver board
		6. The fan module or inverter driver board is faulty;	6. If there is nothing wrong with the front, replace a motor	6. Replace the fan
		7. The fan is damaged		

Fault Codes Outdoor Unit

Fault	Description	Cause	Diagnosis	Corrective Actions
E612	Fan 2 failure	1. The parameter setting is incorrect;	1. Check whether the fan parameters are correct;	1. Check and reset the fan selection parameters;
		2. Abnormal connection	2. Confirm whether the position of communication connection is correct and loose according to the circuit diagram;	2. Plug and unplug terminals;
		3. Fan communication fault;	3. When electrifying, measure the voltage change between A and B ports of the main board with a multimeter. If there is basically no change, or the change is maintained at about 0.1V, the communication port is damaged;	3 Replace the main control panel;
		4. Communication fault;	4. Measure whether the voltage between the red line and the black line of the fan terminal on the fan driver board is 200-370V. If not, it means that the power supply is abnormal and there is something wrong with the fan module or the inverter driver board;	4. Replace the fan speed driver board or check the inverter driver board
		5.The fan module or inverter driver board is faulty;	5. Measure whether the voltage between the white line and the black line of the fan terminal on the fan driver board is 13.5-16.5V. If not, it means that the power supply is abnormal and there is something wrong with the fan module or the inverter driver board	5. Replace the fan speed driver board or check the inverter driver board
		6. The fan module or inverter driver board is faulty;	6. If there is nothing wrong with the fan, replace the motor	6. Replace the fan
		7. The fan is damaged		
E613	Communication failure (main board with fan motor module board)	1. Incorrect connection or poor contact;	1. Check whether the connection is correct (main board and terminal block, terminal block and display)	1. Reconnect;
		2. The communication line is damaged;	2. Connect the fan board directly to the main board to see if the fault is cleared. If the fault is cleared, the communication line is damaged;	2. Replace the communication line;
		3. The main board communication port is damaged;	3. When electrifying, measure the voltage change between A and B ports of the main board with a multimeter. If there is basically no change, or the change is maintained at about 0.1V, the communication port is damaged;	3. Replace the main board;
		4. The fan speed driver board is damaged	4. If all the above are OK, replace the fan speed driver board	4. Replace the fan speed driver board
E614	Reserved			

Fault Codes Outdoor Unit

Fault	Description	Cause	Diagnosis	Corrective Actions
E615	Communication failure (main board with fan motor 2 module board)	1. Incorrect connection or poor contact; 2. The communication line is damaged; 3. The main board communication port is damaged; 4. The fan speed driver board is damaged	1. Check whether the connection is correct (main board and terminal block, terminal block and display) 2. Connect the fan board directly to the main board to see if the fault is cleared. If the fault is cleared, the communication line is damaged; 3. When electrifying, measure the voltage change between A and B ports of the main board with a multimeter. If there is basically no change, or the change is maintained at about 0.1V, the communication port is damaged; 4. If all the above are OK, replace the fan speed driver board	1. Reconnect; 2. Replace the communication line; 3. Replace the main board; 4. Replace the fan speed driver board
E70	IPM overheat	1. The fan does not rotate and the current is large; 2. Less thermally conductive silicone grease at the bottom of the module	1. Check whether the fan is running normally; 2. Check the thermally conductive silicone grease of the heat sink of the fan driver board (whether it is unevenly distributed and whether there is no thermally conductive silicone grease);	1. Troubleshoot the fan and fan driver board; 2. Remove the old thermally conductive silicone grease and re-add thermally conductive silicone grease to ensure that all gaps are filled;
E71	Compressor start failure		1. Check the changing process of EEV step, high pressure, low pressure, inlet/outlet water temp. 2. Check the connection of U/V/W between compressor and compressor driver board. 3. Check the compressor resistance. 4. Check compressor driver board.	Restart the unit.
E72	Compressor over currents - requires manual reset	1. Current detection module is damaged; 2. The compressor load is too large	1. Check the displayed current T36 of compressor (effective value of compressor phase current), measure the actual compressor current value with current clamp, and compare the error between actual and displayed values. If the current detection result exceeds a certain error range, the inverter board current detection circuit is damaged; 2. Check the resistance value between UV, UW and VW phases of the compressor with a multimeter in ohm mode. Under normal conditions, the resistance value is between 1 ~ 20 ohms, and the resistance value between each phase is basically equal. If it exceeds the normal range, the compressor is damaged; 3. Check other temperature/pressure parameters and check the system cause of compressor overcurrent	1. Replace the inverter board; 2. Replace the compressor;

Fault Codes Outdoor Unit

Fault	Description	Cause	Diagnosis	Corrective Actions
E73	Input voltage phase loss	1. Incorrect connection of input terminal; 2. The fuse is damaged and the driver is damaged	1. Check whether the input terminal connection is correct and whether the contact is poor 2. Check whether the fuse is off (using a multimeter). If it is off, the fuse is damaged; 3. If all the above are OK, replace the driver board	1. Reinforce the connections of the power input terminal; 2. Replace the fuse 3. Replace the driver board
E74	IPM current sampling fault	1. The inverter board is damaged	1. Turn power off, wait for 5 minutes and then power on again, and try several times	1. If the fault is not eliminated, it is recommended to replace the inverter board directly
E75	Overheat protection of drive board devices	1. The fan does not rotate and the current is large; 2. Less thermally conductive silicone grease at the bottom of the module	1. Check whether the fan is running normally; 2. Check the thermally conductive silicone grease on the heat sink of the inverter board (whether it is unevenly distributed and whether there is no thermal conductive silicone grease);	1. Troubleshoot the fan and fan driver board; 2. Remove the old thermally conductive silicone grease and re-add thermally conductive silicone grease to ensure that all gaps are filled
E76	Pre-charge failure	1. Input phase loss; 2. Power on after power failure without complete discharge, frequent power on and off resulting in PTC overheating	1. Check the connections of the input terminals of the driver board and the power supply; 2. Try to power up after 5 minutes of power failure	1. Reinforce the connections of the input terminals of the driver board and the power supply; 2. Power up after a long time of power off
E77	DC bus bar over voltage	1. The input voltage is too high; 2. Sampling circuit is damaged	1. Check whether the input voltage is too high (single-phase 170-265V, 2. If the voltage detected for many times is within the normal range, and the fault is still reported after power-off, power-on and restart, replace the driver board	1. Fix the power grid problem first and then start; 2. Replace the inverter board if the fault still exists after restarting
E78	DC bus under voltage	1. The input voltage is too low; 2. Sampling circuit is damaged	1. Check whether the input voltage is too low 2. If the voltage detected for many times is within the normal range, and the fault is still reported after power-off, power-on and restart, replace the driver board	1. Fix the power grid problem first and then start; 2. Replace the inverter board if the fault still exists after restarting
E79	AC input voltage under voltage	1. Input voltage is too low	1. If the input voltage is too low, the measuring position is the input end of the power grid, and the connection positions of the terminal block can be measured;	1. Fix the power grid problem first and then start;
E710	AC input over current shutdown	1. The sampling circuit of the driver is damaged;	1. The sampling circuit of the driver is damaged	1. Replace the driver board;

Fault Codes Outdoor Unit

Fault	Description	Cause	Diagnosis	Corrective Actions
E711	Input voltage sampling fault	1. Abnormal input voltage; 2. The voltage sampling circuit is damaged	1. Check whether the input voltage is too low 2. If the voltage detected for many times is within the normal range, and the fault is still reported after power-off, power-on and restart, replace the driver boar	1. Fix the power grid problem first and then start; 2. Replace the inverter board if the fault still exists after restarting
E712	DSP and PFC communication failure	1. Hardware is damaged;	1. Reset after power failure to see if it will reappear. If it reappears, the driver board is damaged	1. Replace the driver board
E713	Drive plate temperature fault	1. Open circuit or short circuit temperature sensor.	1. Clear the fault	1. If fault cannot be cleared replace the driver board
E714	DSP and communication board communication failure	1. Hardware is damaged;	1. Reset after power failure to see if it will reappear. If it reappears, the driver board is damaged	1. Replace the driver board
E715	Main board communication failure	1. Incorrect connection or poor contact; 2. The display is damaged; 3. The communication line is damaged; 4. The communication port of main board is damaged;	1. Check whether the connection is correct (main board and terminal block, terminal block and display); 2. Change a normal display to see if the fault is eliminated. If the fault is eliminated, the display is damaged; 3. Connect the display directly to the main board to see if the fault is eliminated. If the fault is eliminated, the communication line is damaged; 4. When electrifying, measure the voltage change between A and B ports of the main board with a multimeter. If there is basically no change, or the change is maintained at about 0.1 V, the communication port is damaged;	1. Reconnect; 2. Replace the new display; 3. Replace the wire; 4. Replace the main board
E80	IPM overheat stop	1. The fan does not rotate and the current is large; 2. Less thermally conductive silicone grease at the bottom of the module	1. Check whether the fan is running normally; 2. Check the thermally conductive silicone grease of the heat sink of the fan driver board (whether it is unevenly distributed and whether there is no thermally conductive silicone grease);	1. Troubleshoot the fan and fan driver board; 2. Remove the old thermally conductive silicone grease and re-add thermally conductive silicone grease to ensure that all gaps are filled;
E81 - E82	Reserved			

Fault Codes Outdoor Unit

Fault	Description	Cause	Diagnosis	Corrective Actions
E83	15VDC under voltage	1. Power supply board error	1. Check the power supply is stable or not, and restart unit.	1. If the problem still on, please replace a new drive board.
E84 - E89	Reserved			
E810 - E815	Reserved			
E90	Compressor frequency not being maintained			Notification message
E91	Compressor weak magnetic protection alarm	1. ODU not running	1. Check the refrigeration system.	1. If it's OK, replace a new compressor driver board.
E92	Power unit overheating alarm			Notification message
E93	Reserved			
E94	AC input current down alarm	1. Excessive compressor load	1. Check whether the unit is operating within the allowable working condition range	1. Reset Unit
E95	EEPROM failure warning	1. Burning data is incorrect, read EEPROM data is incorrect, EEPROM is damaged	Burned EEPROM data is incorrect	1. Replace the inverter board
E96 - E99	Reserved			
E910 - E912	Reserved			

For faults requiring a manual reset, shut off the breaker for the outdoor unit and turn back on.

Preparing for Service

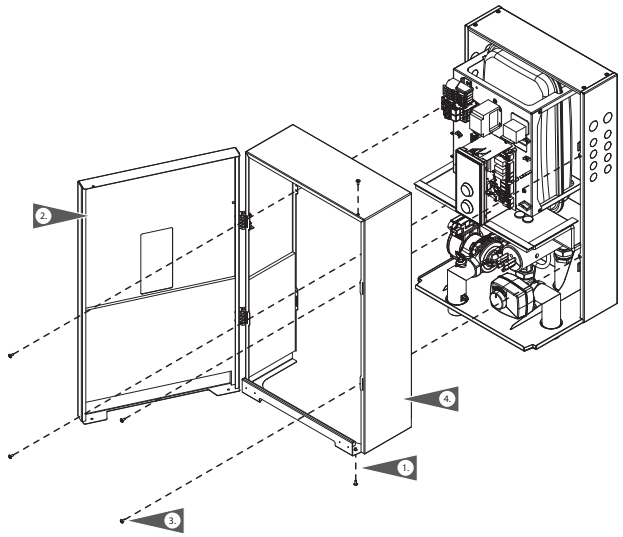

Preparing for Service

The mid panel of the jacketing can be remove to provide additional access of the internal components for service and maintenance. To remove the mid panel;

1. Remove the two door retaining screws.
2. Swing the door open to the left.
3. Remove the four mid panel retaining screws
4. Slide the mid panel forward to remove

When service has been completed reassemble in reverse order.

Check Sensors

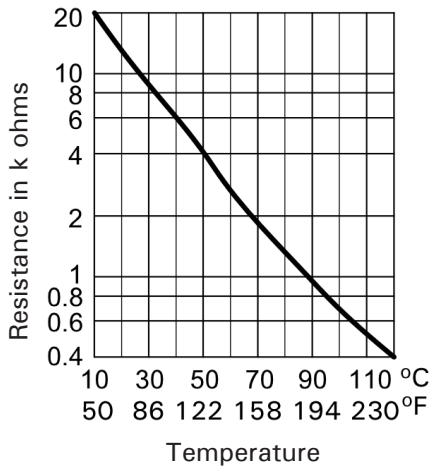

Sensors

All sensor connection are made to indoor unit, all sensors are NTC 10 kΩ. The temperature sensors are connected to a low-voltage printed circuit board.

- DHW Tank Temperature sensor
- System supply water temperature sensor
- Room temperature sensors

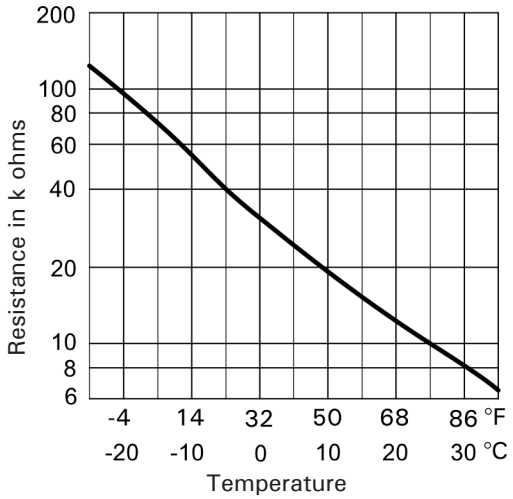

- Outdoor temperature sensor

Checking Fuses

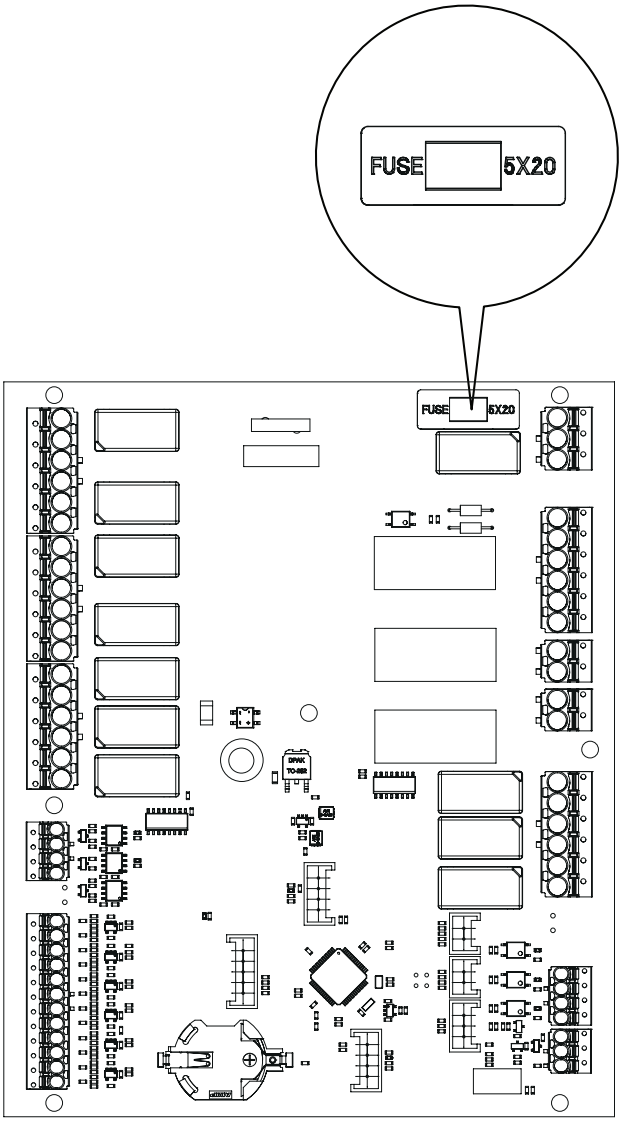

The indoor unit fuse is located on the main board of the indoor unit.

Fuse type:
- T 5.0 A H, 250 V~

1. Switch off the power supply
2. Check the fuse, replace if necessary.

Battery type: CR2032

⚠ IMPORTANT

Incorrect or improperly installed fuses may lead to an increased risk of fire.

⚠ IMPORTANT

Removing the fuses does not result in the load circuit being disconnected from voltage. Contact with any live parts may lead to electrocution. When working on the unit, it is essential that the load circuit is also disconnected. Once power has been disconnected allow 30 seconds for capacitors to discharge prior to beginning any work.

Maintenance

Cleaning

Note:
Commercially available cleaners and special cleaners for heat exchangers (evaporators) may cause damage to the heat pump.

- Clean the surfaces of the unit with a damp cloth only.
- If necessary, clean the shutters of the heat exchanger (evaporator) with a long bristle brush.

The surface of the indoor unit can be cleaned with the microfibre cloth.

Regular maintenance ensures trouble-free, energy-efficient and environmentally-friendly operation in the heating/cooling mode. For this purpose, it is best to contract a specialist company for inspection and maintenance.

Damaged connection wires
If the connection wires of the unit or of outdoor accessories are damaged, they must be replaced with specific connection cables. Only use the cables recommended by the manufacturer for replacement. Notify a specialist company for this purpose.

Refrigerant
The unit contains fluorinated greenhouse gases (a refrigerant) listed in the Kyoto Protocol. The refrigerant type which the device operates with is indicated on the rating plate.
The Global Warming Potential (GWP) of the refrigerant is given as a multiple of the GWP of carbon dioxide (CO_2). The GWP of carbon dioxide CO_2 is 1.

Refrigerant	Global Warming Potential GWP
R32	675[*1]/677[*2]

[*1] According to the Fourth Assessment Report adopted by the Intergovernmental Panel on Climate Change (IPCC)
[*2] According to the Fifth Assessment Report adopted by the Intergovernmental Panel on Climate Change (IPCC)

Maintenance

For systems with flammable refrigerants

- Anyone working on a refrigeration system is required to submit a proof of qualification issued by an accredited body authorised to issue industry certifications. The proof of qualification is a certificate of competence in the safe handling of refrigerants as prescribed in industry standards.
- Maintenance work must always be carried out in accordance with the manufacturer's requirements. If assistance by other persons is required during maintenance and repair work, then a person trained in the safe handling of flammable refrigerants is required to supervise the work being carried out at all times.
- In order to minimise the risk of fire, it is necessary to carry out safety checks before working on equipment where flammable refrigerants are used. Before working on a refrigeration circuit, the following measures must be taken:

General: place of work	
	■ Inform the persons listed below of the work to be carried out: - All maintenance staff - All persons who are in the vicinity of the installation.
	■ Close off the area near the heat pump.
	■ Check the surroundings of the heat pump for combustible materials and sources of ignition. Remove all combustible materials and sources of ignition.
Monitoring the presence of refrigerant	
	■ To identify flammable atmosphere in good time: Before, during and after the work, check the surroundings for refrigerant leaks using an ignition-protected refrigerant detector designed for R32. The refrigerant detector must not cause any sparks and must be properly sealed.
Fire extinguisher	
	A CO_2 or powder extinguisher must be available in the cases described below: ■ Filling the system with refrigerant. ■ Performing welding or soldering work.
Sources of ignition	
	■ During any work carried out on a refrigeration circuit that contains or contained a refrigerant, ignition sources that could ignite the refrigerant must not be used. Any possible sources of ignition, including cigarettes, must be removed from the area where installation, repair, dismantling or disposal work is to be carried out that involves a hazard of the refrigerant leak.
	■ Before starting work, check that there are no combustible materials or sources of ignition around the heat pump. Remove all combustible materials and sources of ignition.
	■ Place no-smoking signs
Work area ventilation	
	■ Carry out repairs in the open air or ventilate the work area well before working on the cooling system or carrying out welding or soldering work.
	■ Ventilation must be in operation at all times. The purpose of the ventilation is to dilute the refrigerant in the event of a leak and to discharge it outdoors if possible.

Maintenance

Inspection of the refrigeration installation	
	■ Replaced electrical components must be suitable for the application and comply with the specifications provided by the manufacturer. Replace any defective components with original spare parts only.
	■ Replace components according to the recommendations issued by the company, contact technical service if necessary.
	■ Check the surroundings of the heat pump for combustible materials and sources of ignition. Remove all combustible materials and sources of ignition.
Carry out the following checks	
	■ Check the operation of the ventilation. Ventilation openings must not be blocked or obstructed.
	■ If a system with hydronic decoupling is used, check the secondary circuit for the refrigerant.
	■ Inscriptions and symbols must be clearly visible and legible. Replace any illegible inscriptions or symbols.
	■ Refrigerant lines or components must be fitted in such a way that they do not come into contact with corrosive substances.
	Exception: refrigerant lines are made of a corrosion-resistant material or are reliably protected against corrosion.
Inspection of electric components	
	■ When carrying out maintenance and repair work on electric parts, safety checks must be carried out: see below.
	■ If a safety-critical fault occurs, do not connect the installation until the fault has been rectified. If it is not possible to rectify the fault immediately, a suitable interim solution for the operation of the installation must be found if possible. Notify the user of the installation
Carry out the following safety checks:	
	■ Discharging of capacitors: ensure that no sparks are generated during the discharge process.
	■ When filling or draining the refrigerant, as well as when flushing the refrigeration circuit, do not place any electrical parts or live wires near the device.
	■ Check the earthing connection.
Repairs to sealed casings	
	■ During work on sealed components, the device must be powered off before the sealed cover is removed.
	■ To warn of a potentially hazardous situation, a permanently operating refrigerant detector should be placed at critical locations.
	■ Particular care must be taken when working on electrical parts so as not to modify the casing in a way that weakens its protective effect. This applies to a damage to cables, the creation of too many connectors on one connection terminal, the creation of connectors that do not meet the manufacturer's requirements, damage to seals and incorrect installation of cable restraints.
	■ Ensure that the unit is installed correctly.
	■ Check that the seals are properly installed. Thereby, check that the seals reliably protect the device against the penetration of a flammable atmosphere. Replace any damaged hoses. **Attention!** Silicone as a sealing agent may affect the performance of a leak detection devices. Do not use silicone as a sealing agent.
	■ Spare parts must comply with the manufacturer's guidelines.
	■ Work on components that are suitable for flammable atmospheres: these components do not need to be powered off.

Maintenance

Repairs to parts that operate in a combustible atmosphere	
	■ Unless it can be established that the permissible voltage and current values will not be exceeded, no capacitive or inductive loads must be connected to the device.
	■ Only those components that meet the requirements for operation in a flammable atmosphere may be connected to voltage in a flammable atmosphere.
	■ Use only original spare parts. In the event of a leak, all other parts may ignite the refrigerant.
Wiring	
	■ Check that the wiring is not exposed to wear, corrosion, stretching, vibration or any adverse environmental conditions and that it is not located near sharp edges.
	■ When inspecting, also consider the effects of ageing and the effects of continuous vibration on the compressors and fans.
Refrigerant detectors	
	■ Under no circumstances use ignition sources to detect the refrigerant and refrigerant leaks.
	■ No flame detectors may be used to detect leaks.
Leak detection The methods described below are suitable for detecting leaks in systems filled with a flammable refrigerant: Leak detection with electronic refrigerant detectors:	
	■ Electronic leak detectors may not be adequately sensitive or need to be calibrated for a specific detection range. Calibrate the detector in a refrigerant-free environment.
	■ The refrigerant detector must be suitable for detecting R32.
	■ The refrigerant detector must contain no potential ignition sources.
	■ Calibrate the refrigerant detector for the refrigerant used. Set the trip threshold < 3 g/a, which is suitable for R32. Leak detection using leak detection fluids, Leak detection fluids are suitable for most of refrigerants.
Note: Chlorine-containing leak detection fluids may react with the refrigerant. As a result, rust may form. Do not use any leak detection fluids that contain chlorine. Procedure when leaks are found in the refrigeration circuit: ■ Immediately extinguish any fire in the vicinity of the heat pump. ■ Do not solder leaks on the refrigeration circuit.	
Refrigerant suction and evacuation	
	Purge refrigerant using methods approved for A2L refrigerants
Refrigerant filling	
	Fill refrigerant using methods approved for A2L refrigerants
Marking (inscriptions on the heat pump) A plate with the date and signature and the following information must be placed in a clearly visible position on the heat pump which has been decommissioned:	
	■ Flammable refrigerant
	■ Installation is not working.
	■ Refrigerant has been removed.

Indoor Unit Wiring Diagram

33NM0AW020028/33NM0AW034043 Indoor Unit

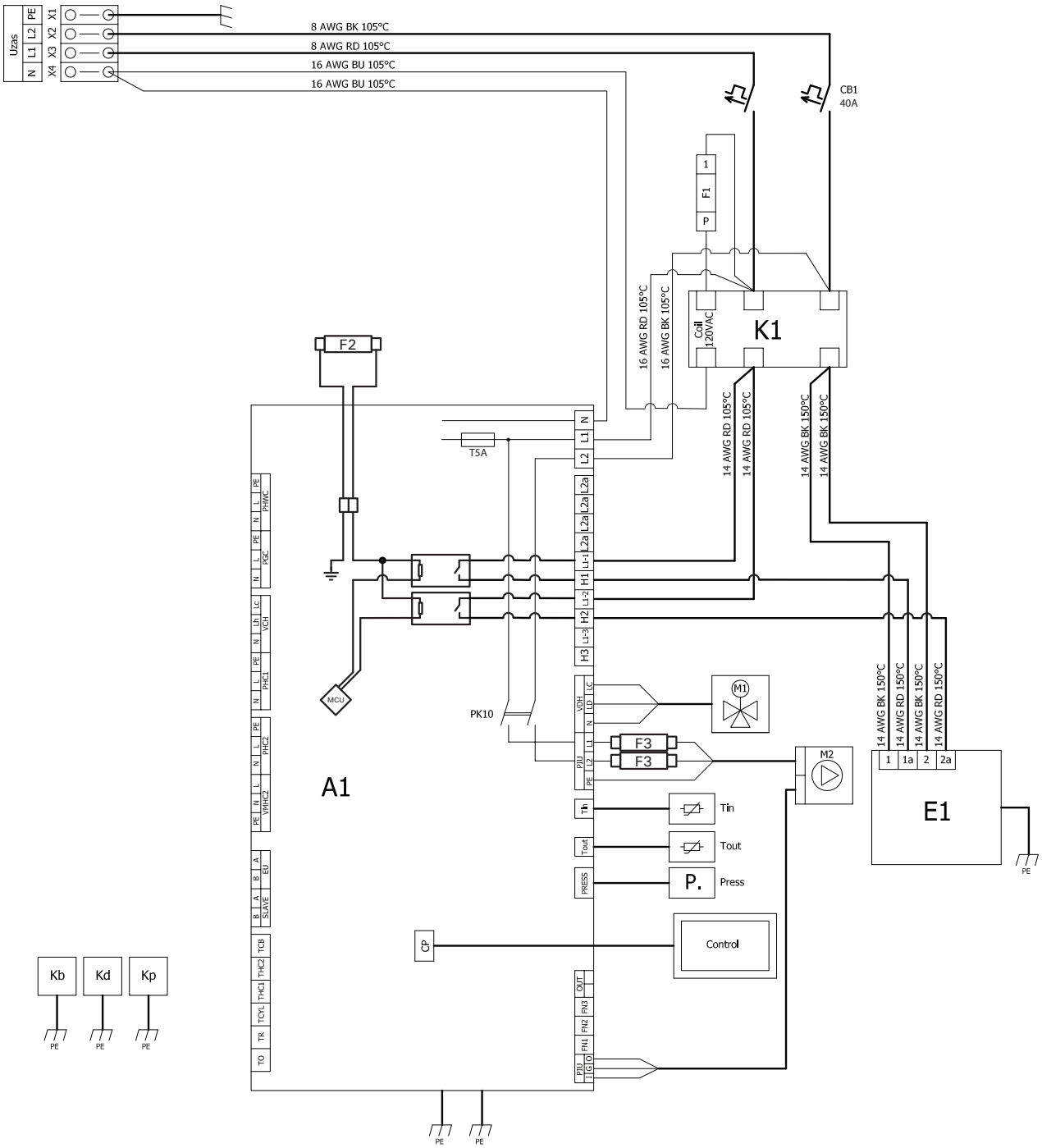

Legend

E1 - Heat Exchanger
A1 - Main Board
CP - Control Panel
F1 - Fixed High Limit
F2 - Automatic Reset High Limit
F3 - Internal Pump Fuse
CB1 - Circuit Breaker
K1 - Contactor
M1 - Internal Diverting Valve
M2 - Internal Circulation Pump
Tin - Return Temperature Sensor
Tout - Supply Temperature Sensor
P - Pressure Sensor

Indoor Unit Wiring Diagram

33NM0AW051078 Outdoor Unit

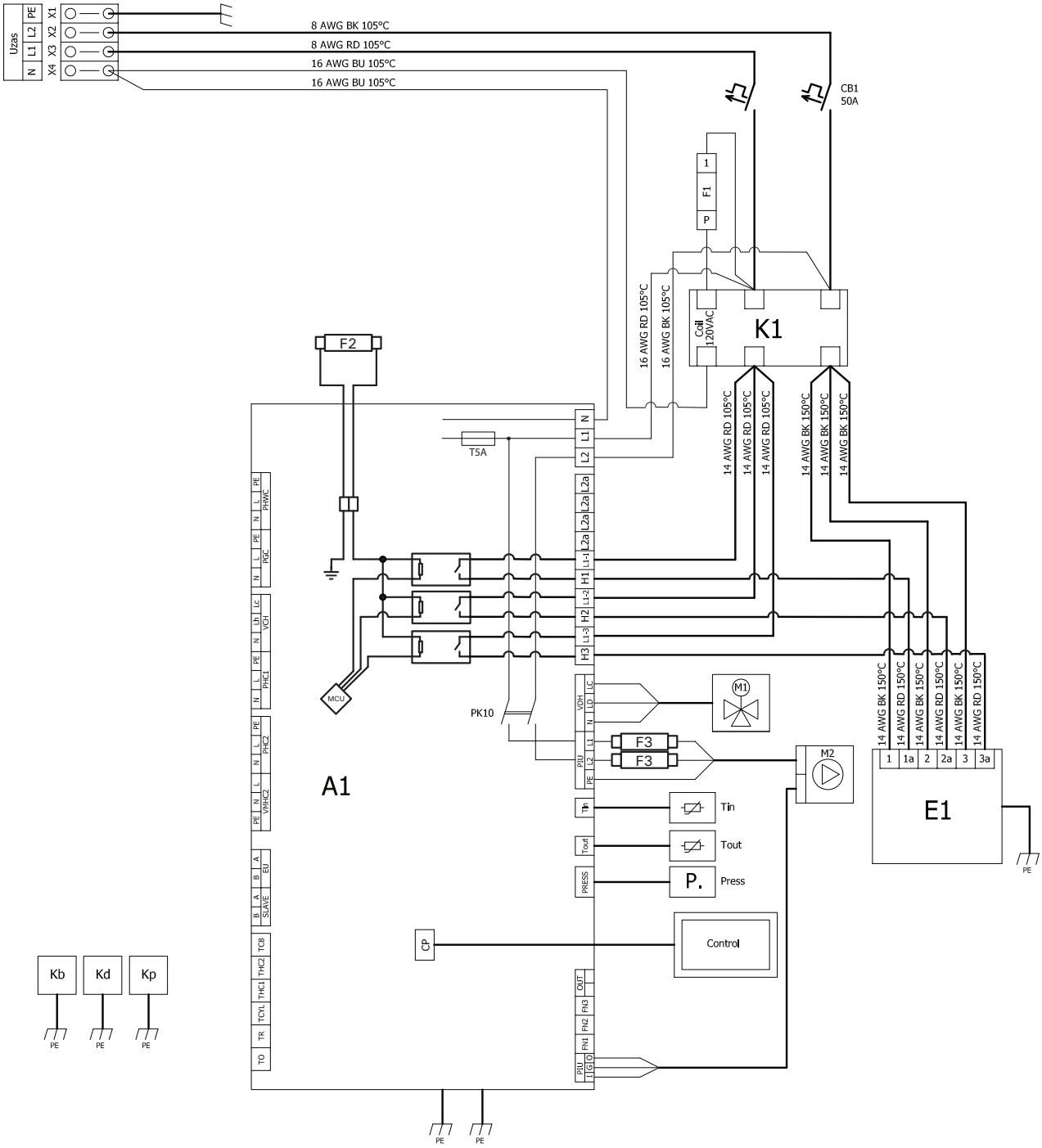

Legend

E1 - Heat Exchanger
A1 - Main Board
CP - Control Panel
F1 - Fixed High Limit
F2 - Automatic Reset High Limit
F3 - Internal Pump Fuse
CB1 - Circuit Breaker
K1 - Contactor
M1 - Internal Diverting Valve
M2 - Internal Circulation Pump
Tin - Return Temperature Sensor
Tout - Supply Temperature Sensor
P - Pressure Sensor

Outdoor Unit Wiring Diagram

33NM3AW0200281A3 Outdoor Unit

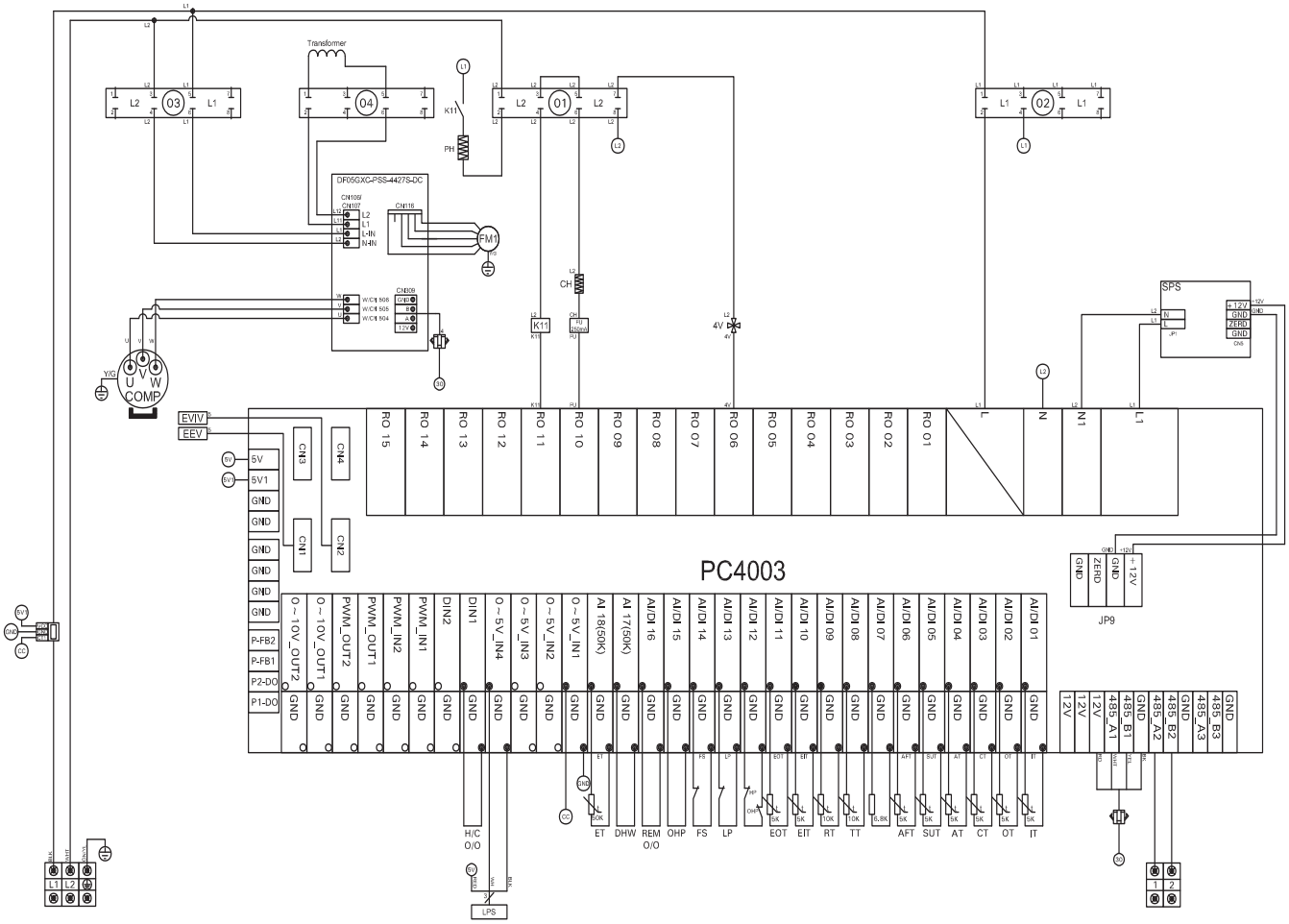

Designation	Description
AFT	Anti-freeze Temperature
AT	Ambient Temperature
COMP	Compressor
CT	Coil Temperature
CH	Cabinet Heater
EIT	EVI Inlet Gas Temperature
EOT	EVI Outlet Gas Temperature
EEV	Electronic Expansion Valve
EVIV	Electronic Expansion Valve for EVI
ET	Exhaust Temperature
FM	Fan Motor
FS	Flow Switch
HP	High Pressure Protection
IT	Inlet Water Temperature

Designation	Description
K4	Relay of Circulation Pump
K5	Relay of Hot Water Pump
K9	Relay of 3-Way Valve
K11	Relay of Pan Heater
LP	Low Pressure Protection
LPS	Low Pressure Sensor
OT	Outlet Water Temperature
OHP	Overheat Protection
PH	Pan Heater
RT	Room Temperature
SUT	Suction Temperature
SPS	Switching Power Supply
4V	4-Way Valve
TT	Tank Temperature

Outdoor Unit Wiring Diagram

33NM3AW0340431A3 Outdoor Unit

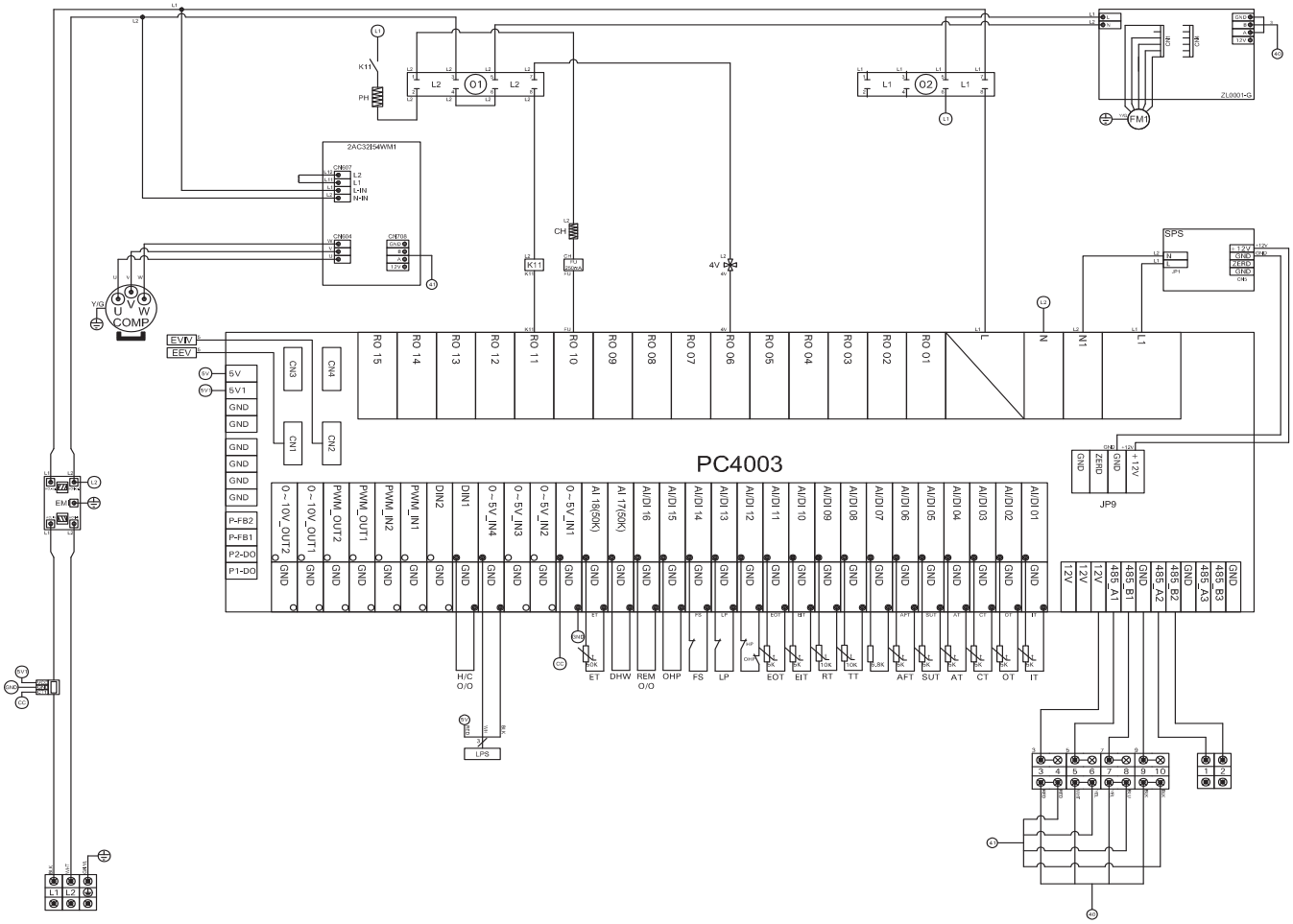

Designation	Description
AFT	Anti-freeze Temperature
AT	Ambient Temperature
COMP	Compressor
CT	Coil Temperature
CH	Cabinet Heater
EIT	EVI Inlet Gas Temperature
EOT	EVI Outlet Gas Temperature
EEV	Electronic Expansion Valve
EVIV	Electronic Expansion Valve for EVI
ET	Exhaust Temperature
FM	Fan Motor
FS	Flow Switch
HP	High Pressure Protection
IT	Inlet Water Temperature

Designation	Description
K4	Relay of Circulation Pump
K5	Relay of Hot Water Pump
K9	Relay of 3-Way Valve
K11	Relay of Pan Heater
LP	Low Pressure Protection
LPS	Low Pressure Sensor
OT	Outlet Water Temperature
OHP	Overheat Protection
PH	Pan Heater
RT	Room Temperature
SUT	Suction Temperature
SPS	Switching Power Supply
4V	4-Way Valve
TT	Tank Temperature

Outdoor Unit Wiring Diagram

33NM3AW0510781A3 Outdoor Unit

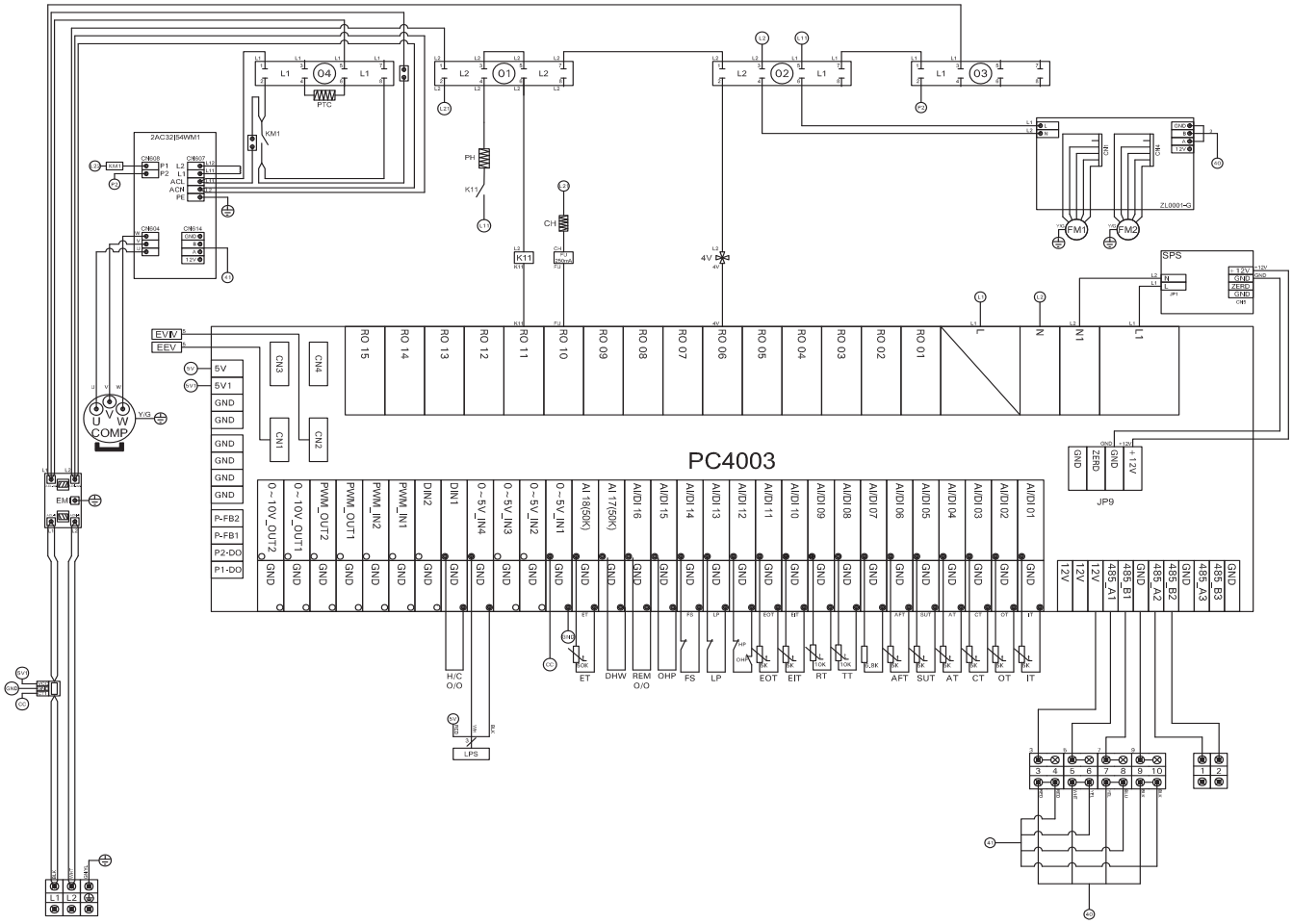

Designation	Description
AFT	Anti-freeze Temperature
AT	Ambient Temperature
COMP	Compressor
CT	Coil Temperature
CH	Cabinet Heater
EIT	EVI Inlet Gas Temperature
EOT	EVI Outlet Gas Temperature
EEV	Electronic Expansion Valve
EVIV	Electronic Expansion Valve for EVI
ET	Exhaust Temperature
FM	Fan Motor
FS	Flow Switch
HP	High Pressure Protection
IT	Inlet Water Temperature

Designation	Description
K4	Relay of Circulation Pump
K5	Relay of Hot Water Pump
K9	Relay of 3-Way Valve
K11	Relay of Pan Heater
LP	Low Pressure Protection
LPS	Low Pressure Sensor
OT	Outlet Water Temperature
OHP	Overheat Protection
PH	Pan Heater
RT	Room Temperature
SUT	Suction Temperature
SPS	Switching Power Supply
4V	4-Way Valve
TT	Tank Temperature

Parts List

Indoor Unit Model No.	Serial No.
33NM0AW020028	□□□□NB□□□□
33NM0AW034043	□□□□NB□□□□
33NM0AW051078	□□□□NB□□□□

Ordering Replacement Parts:
Please provide Model and Serial Number from rating plate when ordering replacement parts.
Order replacement components from your distributor.

0001 - Wall Mounting Bracket
0002 - Electrical Knockout Panel
0003 - Indoor Unit User Interface
0004 - Mid-panel
0005 - Door

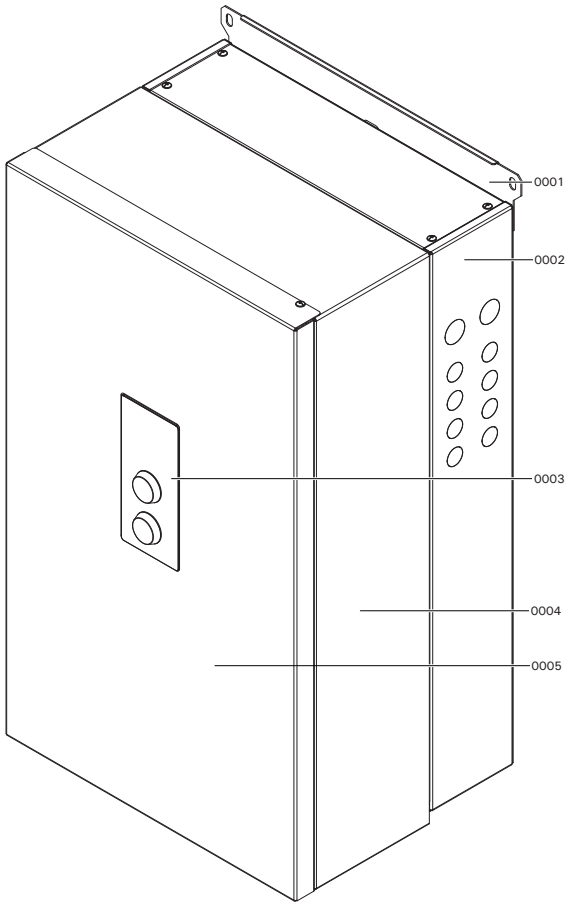

Parts List

Indoor Unit Model No.	Serial No.
33NM0AW020028	□□□□NB□□□□
33NM0AW034043	□□□□NB□□□□
33NM0AW051078	□□□□NB□□□□

Ordering Replacement Parts:
Please provide Model and Serial Number from rating plate when ordering replacement parts.
Order replacement components from your distributor.

0001 - DIN Rail
0002 - Fixed High Limit
0003 - Contactor
0004 - Control Board
0005 - Temperature Sensor

Other Items not Illustrated

0006 - Immersion Temperature Sensor (System)
0007 - Strap-on Temperature Sensor System
0008 - Room Temperature Sensor
0009 - Outdoor Temperature Sensor
0010 - Fuse 5A 250VAC Time Delay
0011 - Fuse Holder
0012 - Pump Fuse

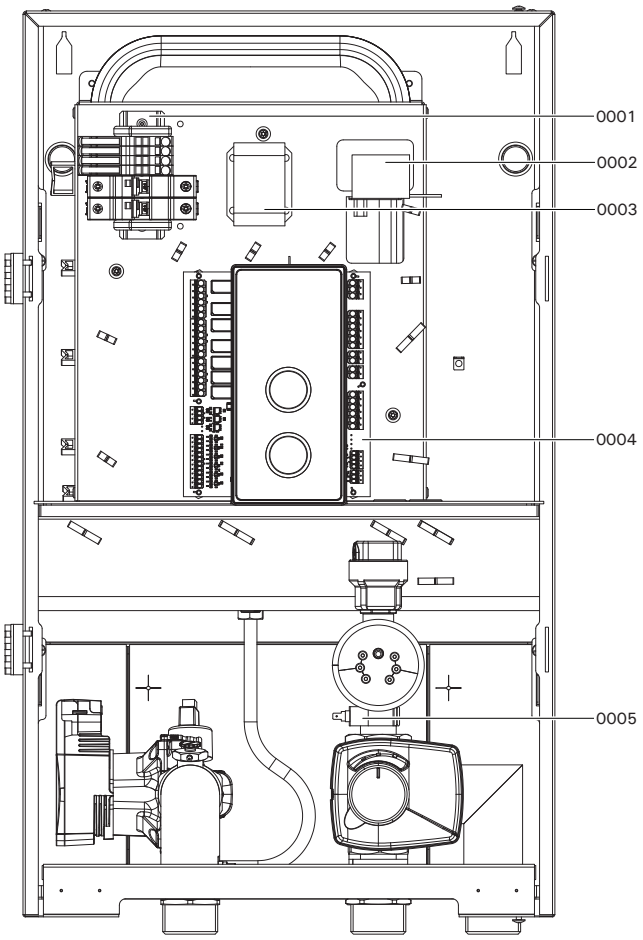

Parts List

Indoor Unit Model No.	Serial No.
33NM0AW020028	□□□□NB□□□□
33NM0AW034043	□□□□NB□□□□
33NM0AW051078	□□□□NB□□□□

Ordering Replacement Parts:
Please provide Model and Serial Number from rating plate when ordering replacement parts.
Order replacement components from your distributor.

0001 - Expansion vessel
0002 - Automatic Air Vent
0003 - Electric Heating Element
0004 - Gasket
0005 - DHW Heating Supply Pipe
0006 - Diverting Valve Body
0007 - System Supply Pipe
0008 - Diverting Valve Actuator
0009 - System Return Pipe
0010 - Pressure Sensor
0011 - Outdoor Unit Return Pipe
0012 - Manual Bleeder Screw
0013 - Circulation Pump
0014 - Outdoor Unit Supply Pipe
0015 - Auto Reset Temperature Limit

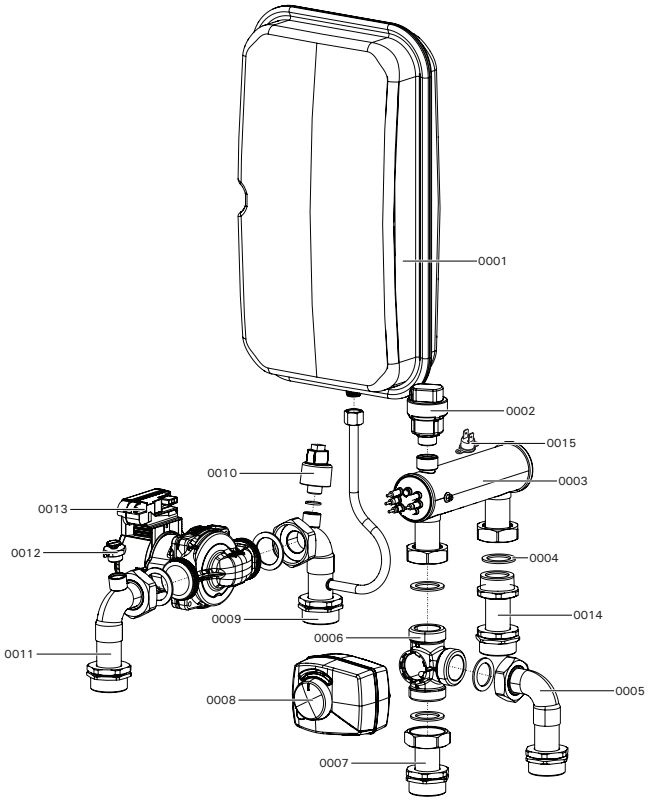

Parts List

Outdoor Unit Model No.	Serial No.
33NM3AW0200281A3	□□□□NA□□□□

Ordering Replacement Parts:
Please provide Model and Serial Number from rating plate when ordering replacement parts.
Order replacement components from your distributor.

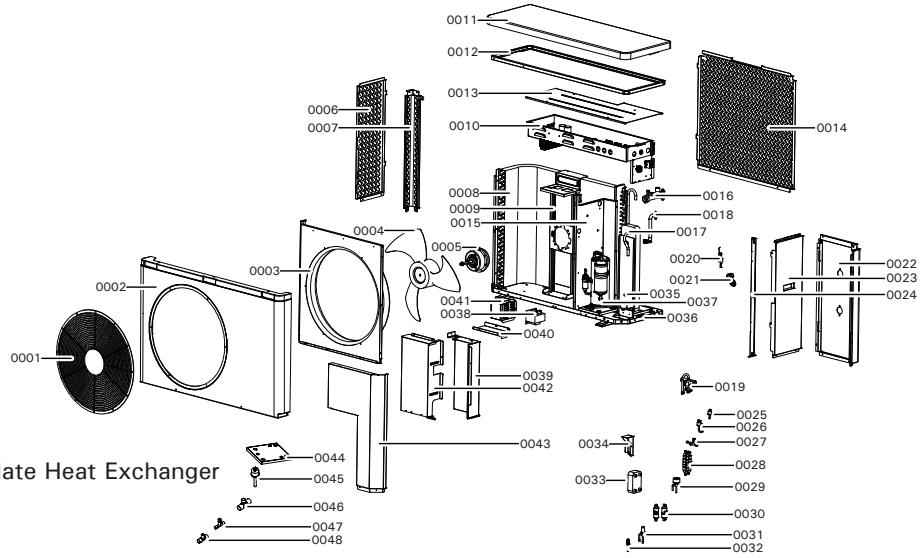

0001 Fan Grill
0002 Front Panel
0003 Wind Deflector
0004 Fan Blade
0005 Fan Motor
0006 Left Panel
0007 Corner Panel
0008 Air to Refrigerant Coil
0009 Fan Motor Bracket
0010 Electrical Box
0011 Top Panel
0012 Top Rail
0013 Electrical Box Cover
0014 Rear Grill Panel
0015 Interior Separation Panel
0016 System Water Supply Pipe
0017 Refrigerant to System Water Plate Heat Exchanger
0018 System Water Return Pipe
0019 Reversing Valve
0020 System Water Flow Switch
0021 Electrical Grommet
0022 Rear Connection Panel
0023 Side Access Panel
0024 Support Bracket
0025 Low Pressure Switch
0026 High Pressure Switch
0027 Isolation Fill Valve
0028 One Way Safety Valve
0029 Electronic Expansion Valve
0030 Filter
0031 Electronic Expansion Valve
0032 Schrader Valve
0033 EVI Plate Heat Exchanger
0034 EVI Plate Heat Exchanger Bracket
0035 Refrigerant to System Water Plate Heat Exchanger Bracket
0036 Base Plate
0037 Compressor
0038 Transformer
0039 Compressor Cover 1
0040 Compressor Cover 2
0041 Transformer Housing
0042 Compressor Cover 3
0043 Compressor Cover 4
0044 Suspension Chassis
0045 Pressure Switch
0046 Tee Fitting (9.7X9.7)
0047 Tee Fitting (6.5X6.5)
0048 Tee Fitting (9.52X6.35)

Parts List

Outdoor Unit Model No.	Serial No.
33NM3AW0200281A3	□□□□NA□□□□

Ordering Replacement Parts:
Please provide Model and Serial Number from rating plate when ordering replacement parts.
Order replacement components from your distributor.

0001 Fuse
0002 2 Pole Terminal
0003 Driver Board
0004 Switching Power Supply
0005 PC4003-G Board
0006 Electrical Enclosure
0007 Relay
0008 BHB21 Board
0009 DIN Rail 2 Pole
0010 Power Supply Terminal

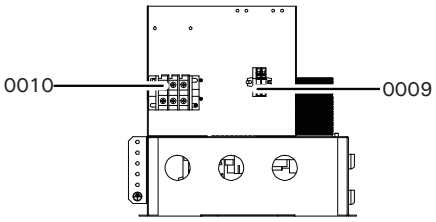

Other Items not Illustrated

0011 - Temperature Sensor (Suction, Ambient, Coil, Water Outlet, EVI Inlet, EVI Outlet)
0012 - Exhaust Temperature Sensor
0013 - Inlet Temperature Sensor
0014 - Refrigerant Pressure Sensor

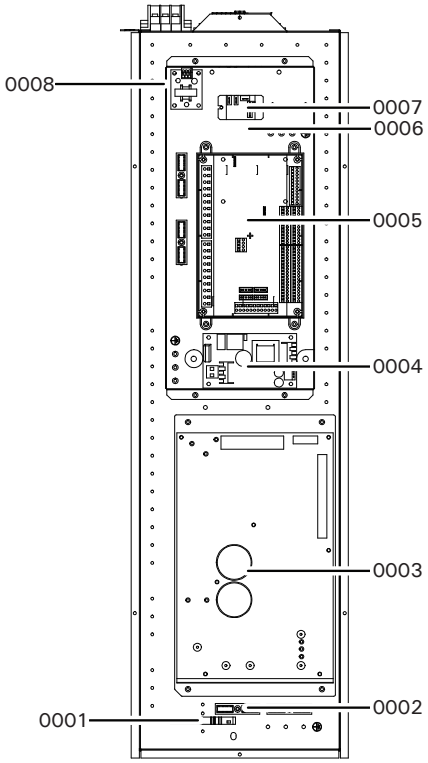

Parts List

Outdoor Unit Model No.	Serial No.
33NM3AW0340431A3	□□□□NA□□□□

Ordering Replacement Parts:
Please provide Model and Serial Number from rating plate when ordering replacement parts.
Order replacement components from your distributor.

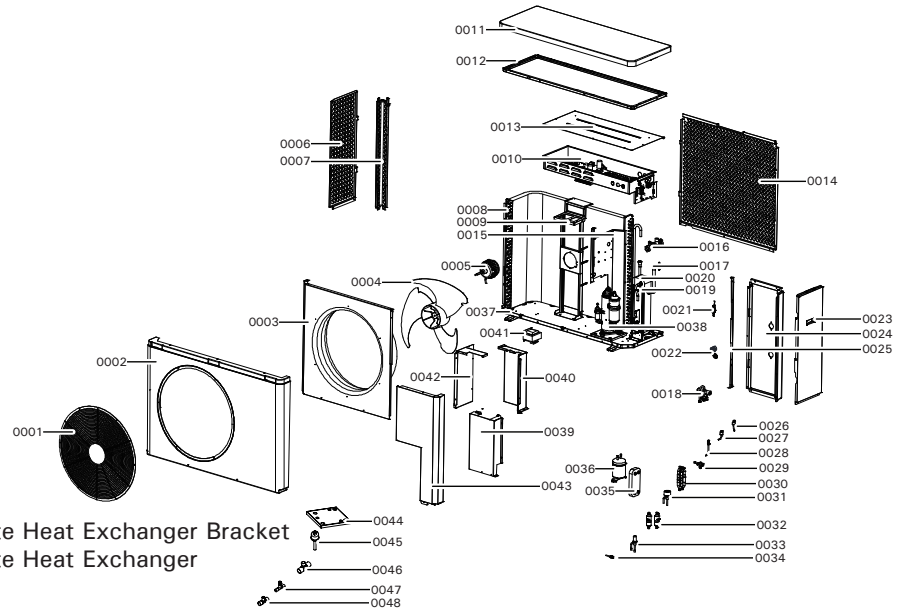

0001 Fan Grill
0002 Front Panel
0003 Wind Deflector
0004 Fan Blade
0005 Fan Motor
0006 Left Panel
0007 Corner Panel
0008 Air to Refrigerant Coil
0009 Fan Motor Bracket
0010 Electrical Box
0011 Top Panel
0012 Top Rail
0013 Electrical Box Cover
0014 Rear Grill Panel
0015 Interior Separation Panel
0016 System Water Supply Pipe
0017 System Water Return Pipe
0018 Reversing Valve
0019 Refrigerant to System Water Plate Heat Exchanger Bracket
0020 Refrigerant to System Water Plate Heat Exchanger
0021 System Water Flow Switch
0022 Electrical Grommet
0023 Side Access Panel
0024 Rear Connections Panel
0025 Support Bracket
0026 Low Pressure Switch
0027 High Pressure Switch
0028 Schrader Valve 1
0029 Isolation Fill Valve
0030 One Way Safety Valve
0031 Electronic Expansion Valve
0032 Filter
0033 Electronic Expansion Valve 2
0034 Schrader Valve 2
0035 EVI Plate Heat Exchanger
0036 Fluid Reservoir
0037 Base Plate
0038 Compressor
0039 Compressor Cover 1
0040 Compressor Cover 2
0041 Transformer
0042 Compressor Cover 3
0043 Compressor Cover 4
0044 Suspension Chassis
0045 Pressure Switch
0046 Tee Fitting (9.7X9.7)
0047 Tee Fitting (6.5X6.5)
0048 Tee Fitting (9.52X6.35)

Parts List

Outdoor Unit Model No.	Serial No.
33NM3AW0340431A3	□□□□NA□□□□

Ordering Replacement Parts:
Please provide Model and Serial Number from rating plate when ordering replacement parts.
Order replacement components from your distributor.

0001 Switching Power Supply
0002 Fan Speed Control Module
0003 Driver Board
0004 2 Pole Terminal
0005 PC4003-G Board
0006 Relay
0007 Fuse
0008 8 Pole Terminal
0009 BHB21 Board
0010 EMC Filter
0011 DIN Rail 2 Pole
0012 Power Supply Terminal

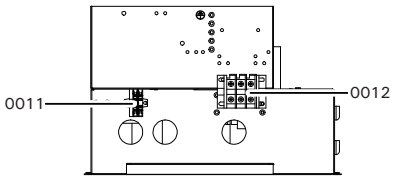

Other Items not Illustrated

0013 - Temperature Sensor (Suction, Ambient, Coil, Water Outlet, EVI Inlet, EVI Outlet)
0014 - Exhaust Temperature Sensor
0015 - Inlet Temperature Sensor
0016 - Refrigerant Pressure Sensor

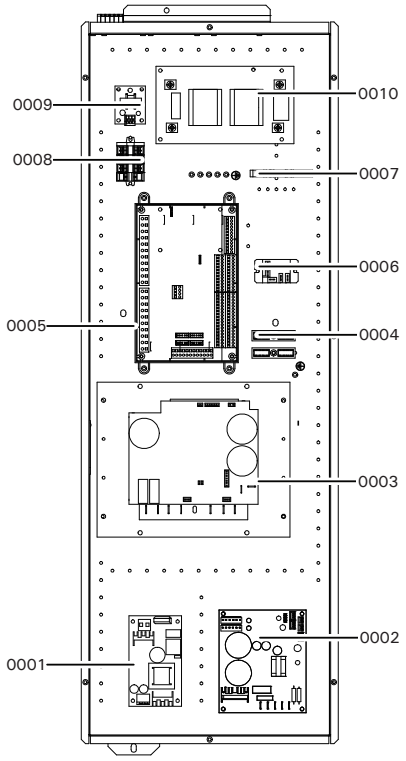

Parts List

Outdoor Unit Model No.	Serial No.
33NM3AW0510781A3	□□□□NA□□□□

Ordering Replacement Parts:
Please provide Model and Serial Number from rating plate when ordering replacement parts.
Order replacement components from your distributor.

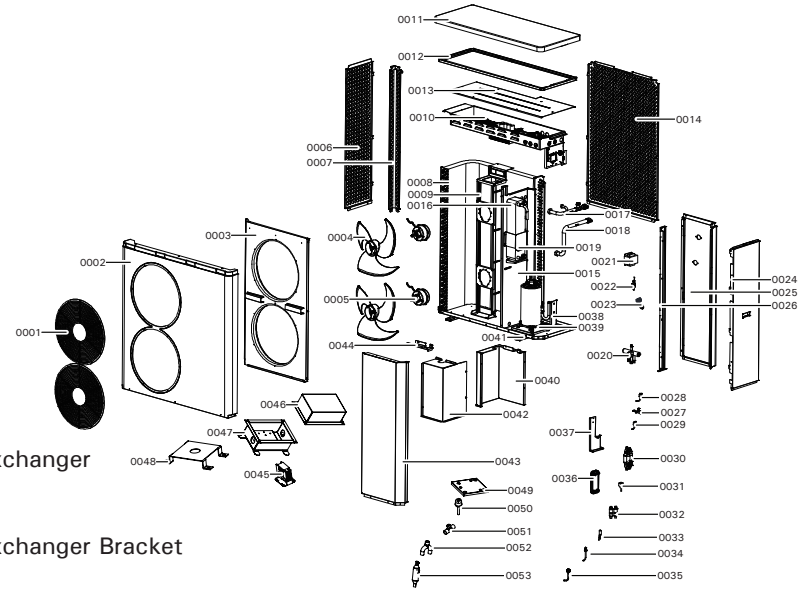

0001 Fan Grill
0002 Front Panel
0003 Wind Deflector
0004 Fan Blade
0005 Fan Motor
0006 Left Panel
0007 Corner Panel
0008 Air to Refrigerant Coil
0009 Fan Motor Bracket
0010 Electrical Box
0011 Top Panel
0012 Top Rail
0013 Electrical Box Cover
0014 Rear Grill Panel
0015 Interior Separation Panel
0016 Refrigerant to System Water Plate Heat Exchanger
0017 System Water Supply Pipe
0018 System Water Return Pipe
0019 Refrigerant to System Water Plate Heat Exchanger Bracket
0020 Reversing Valve
0021 Transformer
0022 System Water Flow Switch
0023 Electrical Grommet
0024 Side Access Panel
0025 Rear Connections Panel
0026 Support Bracket
0027 Isolation Fill Valve
0028 High Pressure Switch
0029 Low Pressure Switch
0030 One Way Safety Valve
0031 Electronic Expansion Valve
0032 Filter
0033 Electronic Expansion Valve
0034 Schrader Valve 1
0035 Schrader Valve 2
0036 EVI Plate Heat Exchanger
0037 EVI Plate Heat Exchanger Bracket
0038 Bracket
0039 Compressor
0040 Compressor Cover 1
0041 Base Plate
0042 Compressor Cover 2
0043 Compressor Cover 3
0044 Compressor Cover 4
0045 Transformer
0046 Transformer Cover
0047 Transformer Base
0048 Mounting Bracket
0049 Suspension Chassis
0050 Pressure Switch
0051 Tee Fitting (9.7X9.7)
0052 Tee Fitting (12.7X12.7)
0053 Filter

Parts List

Outdoor Unit Model No.	Serial No.
33NM3AW0510781A3	□□□□NA□□□□

Ordering Replacement Parts:
Please provide Model and Serial Number from rating plate when ordering replacement parts.
Order replacement components from your distributor.

0001 PC4003-G Board
0002 Switching Power Supply
0003 Fan Speed Control Module
0004 8 Pole Terminal
0005 Fuse
0006 Driver Board
0007 2 Pole Terminal
0008 Temperature Sensor
0009 Electrical Enclosure
0010 BHB21 Board
0011 EMC Filter
0012 Relay
0013 Power Supply Terminal
0014 DIN Rail 2 Pole
0015 Electrical Enclosure

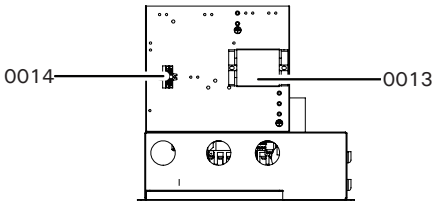

Other Items not Illustrated

0016 - Temperature Sensor (Suction, Ambient, Coil, Water Outlet, EVI Inlet, EVI Outlet)
0017 - Exhaust Temperature Sensor
0018 - Inlet Temperature Sensor
0019 - Refrigerant Pressure Sensor

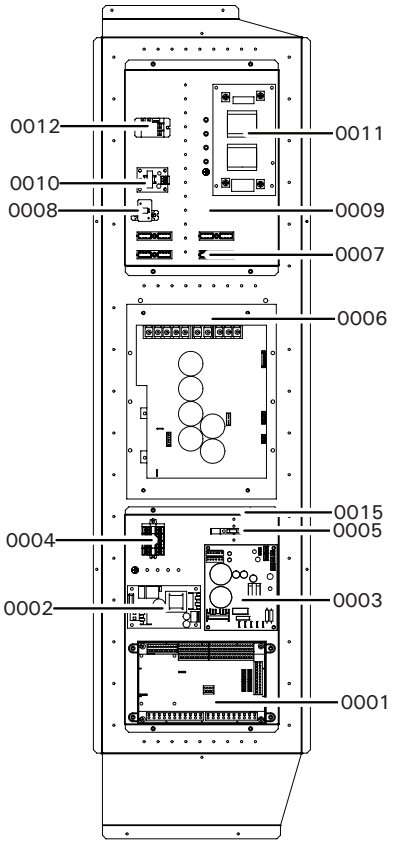

Parts List

Indoor Unit Model No.	Serial No.
33NM0AW020028	□□□□NB□□□□
33NM0AW034043	□□□□NB□□□□
33NM0AW051078	□□□□NB□□□□

Ordering Replacement Parts:
Please provide Model and Serial Number from rating plate when ordering replacement parts.
Order replacement components from your distributor.

0001 - Reducer 1-¼ to 1 in. Brass
0002 - 1 in. Close Nipple Brass
0003 - Isolation Valve
0004 - 1-¼ X 1 X 1 in. Reducing Tee Brass
0005 - Pressure Relief Valve 30 PSI
0006 - ¾ in. Close Nipple Brass
0007 - 1 in. X 6 in. Long Nipple Brass
0008 - 1 to ¾ in. Reducing Elbow Brass
0009 - Changeover Relay (Not Shown)
0010 - Logo (Not Shown)

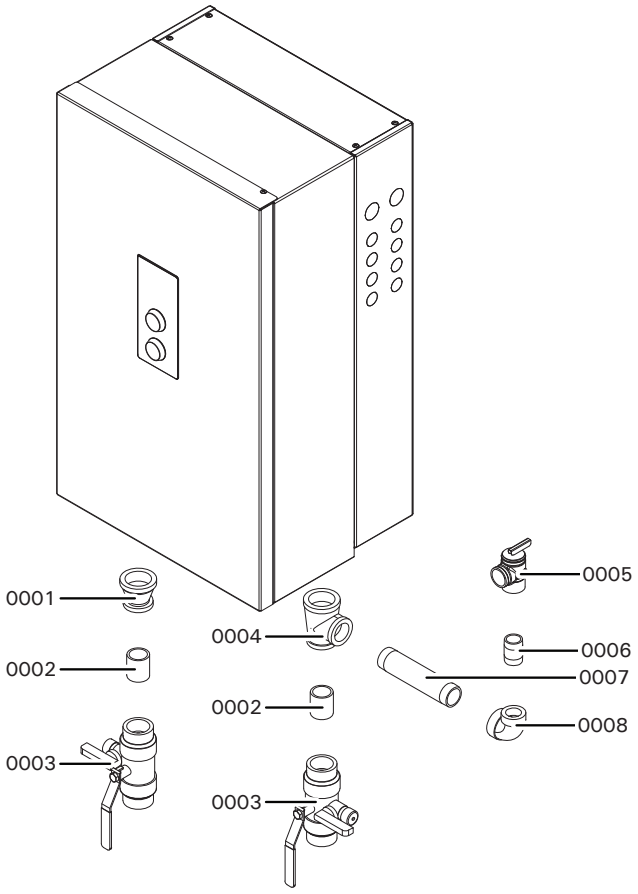

6241203 - 03

Parts List

Outdoor Unit Model No.	Serial No.
33NM3AW0200281A3	□□□□NA□□□□
33NM3AW0340431A3	□□□□NA□□□□
33NM3AW0510781A3	□□□□NA□□□□

Ordering Replacement Parts:
Please provide Model and Serial Number from rating plate when ordering replacement parts.
Order replacement components from your distributor.

0001 - Pressure Relief Valve 30 PSI
0002 - ¾ in. Close Nipple Brass
0003 - ¾ in. Street Elbow Brass
0004 - 1 X 1 X ¾ in. Reducing Tee Brass
0005 - Microbubble Air Separator
0006 - 1 in. Elbow Brass
0007 - 1 in. X 8 in. Long Nipple Brass
0008 - Logo (Not Shown)

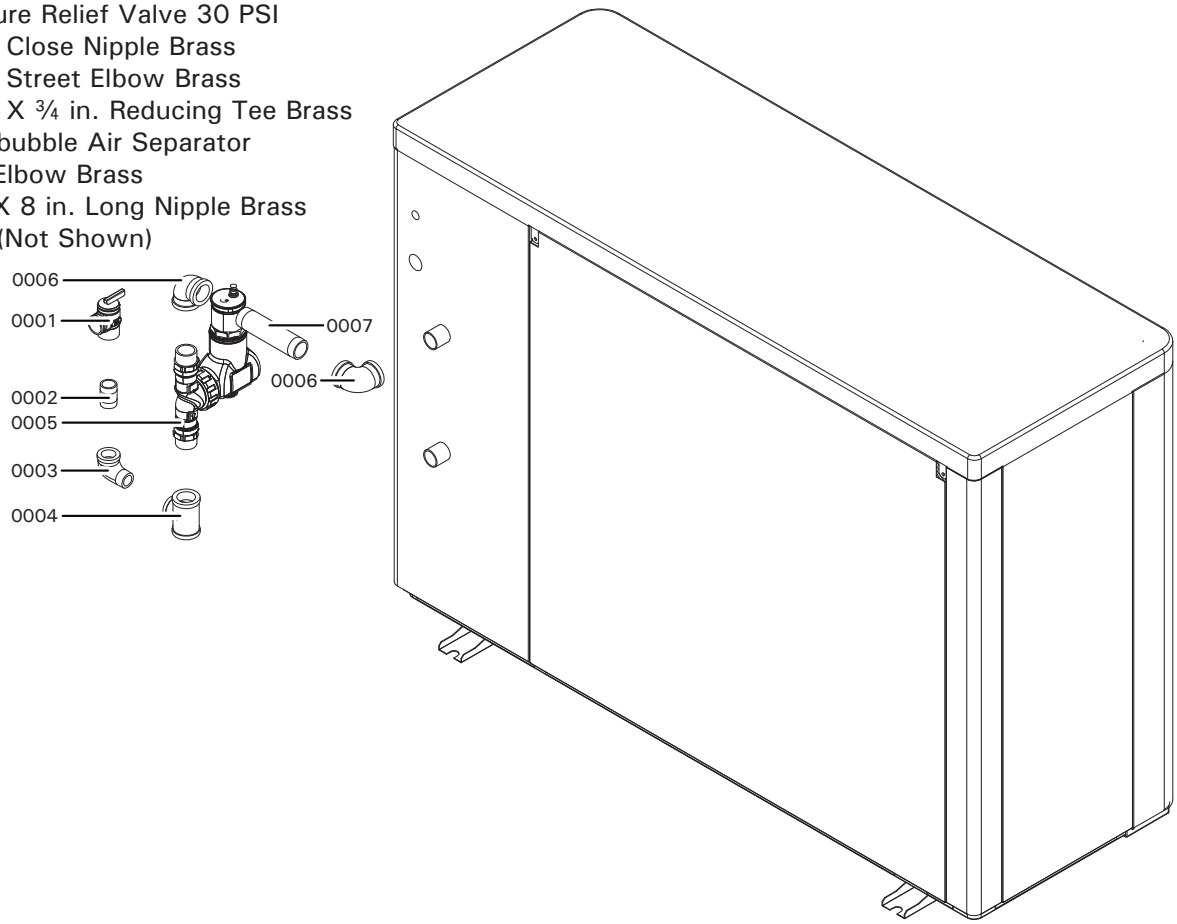

Indoor Unit Technical Data

Indoor Unit		Model	33NM0AW-020028	33NM0AW-034043	33NM0AW-051078
Electrical Data					
Power Supply		Voltage	230 VAC	230 VAC	230 VAC
		Phase	1	1	1
		Hertz	60	60	60
		IDU Amperage (FLA)	31	31	43
		Maximum Fuse (Amps)	40	40	50
Electric Heater Output		kW (BTU)	6 (20500)	6 (20500)	9 (30700)
		Heating Element Amperage	25	25	37
Heating Elements			2	2	3
Hydronic Data					
Hydronic connection			1¼ NPT (Male Threads)	1¼ NPT (Male Threads)	1¼ NPT (Male Threads)
Min. Operating Pressure		PSI (bar)	8 (0.5)	8 (0.5)	8 (0.5)
Max. Operating Pressure		PSI (bar)	30 (2)	30 (2)	30 (2)
Max. System Temperature		°F (°C)	140 (60)	140 (60)	140 (60)
Max. DHW Temperature		°F (°C)	167 (75)	167 (75)	167 (75)
Max. Operating Temperature		°F (°C)	165 (74)	165 (74)	165 (74)
Fixed High Limit		°F (°C)	186 (86)	186 (86)	186 (86)
Expansion vessel volume		USG (l)	3.2 (12)	3.2 (12)	3.2 (12)
Expansion vessel precharge		PSI (bar)	14 (1)	14 (1)	14 (1)
Minimum flow		GPM (m^3/h)	2.6 (0.6)	3.1 (0.7)	3.7 (0.85)
Maximum flow		GPM (m^3/h)	4.4 (1.0)	7.5 (1.7)	12.8 (2.9)
Pressure drop		ft. of hd (kPa)	0.6 (2)	1.6 (5)	5.0 (15)
Residual Head*1		ft. of hd (kPa)	17 (50)	17 (50)	17 (50)
Minimum Relief Valve Capacity		MBH	510	510	510
Dimensional Data					
Dimensions	Height	in. (mm)	28-½ (723)	28-½ (723)	28-½ (723)
	Width	in. (mm)	16-¼ (416)	16-¼ (416)	16-¼ (416)
	Depth	in. (mm)	12-¾ (323)	12-¾ (323)	12-¾ (323)
Weight		lbs (kg)	64 (29)	64 (29)	64 (29)

*1 Residual head for the Indoor Unit internal pump, the residual head value takes into consideration pressure drop of the Indoor Unit, Outdoor Unit and supplied installation fittings at rated maximum flow rate of the Indoor Unit. The pressure drop through the piping between the IDU, ODU, buffer tank, and the coil of the indirect DHW tank, must not exceed the stated residual head in order to maintain optimal system performance.

Outdoor Unit Technical Data

Outdoor Unit		Model	33NM3AW-0200281A3	33NM3AW-0340431A3	33NM3AW-0510781A3
Heating/Cooling Data					
Heating Capacity*1		MBH (kW)	20.5 (6.0)	34.0 (10)	58.0 (17)
COP (A5W110)*2			1.3	2.2	1.9
Cooling Capacity Range	Low	Tons (kW)	1.4 (4.9)	2.8 (9.8)	4.2 (14.7)
	High	Tons (kW)	1.5 (5.2)	2.9 (10.2)	4.3 (15.1)
Energy Efficiency Ratio (EER)			16.81	16.75	14.46
COP			4.927	4.909	4.238
Electrical Data					
Power Supply		Voltage	208/230 VAC	208/230 VAC	208/230 VAC
		Phase	1	1	1
		Hertz	60	60	60
Total Electrical Load		Amps	13.0	21.8	29.4
Compressor Load Rating		Amps	12.2	21.0	27.8
Fan Motor Load Rating		Amps	0.8	0.8	2 x 0.8
Minimum Circuit Ampacity		Amps	17	28	37
Maximum Overcurrent Protection		Amps	25	45	60
Refrigerant					
Refrigerant			R32	R32	R32
Factory Charge		lbs (kg)	2.43 (1.1)	3.97 (1.8)	4.41 (2.0)
Max. Allowable Pressure - Heating		PSIG (MPa)	725 (5.0)	740 (5.1)	972 (6.7)
Max. Allowable Pressure - Cooling		PSIG (MPa)	624 (4.3)	609 (4.2)	624 (4.3)
Max. Operating Pressure - Low Side		PSIG (MPa)	305 (2.1)	305 (2.1)	305 (2.1)
Max. Operating Pressure - High Side		PSIG (MPa)	638 (4.4)	638 (4.4)	638 (4.4)
Hydronic Data					
Hydronic connection			1 NPT (Male Threads)	1 NPT (Male Threads)	1 NPT (Male Threads)
Water Flow Rate		GPM (m^3/h)	3.7-8.8 (0.85-2.0)	6.2-15.0 (1.4-3.4)	11.4-25.5 (2.6-5.8)
Pressure drop		ft. of hd (kPa)	3.3 (10)	6.7 (20)	15.0 (45)
Maximum temperature of heating medium		°F(°C)	149 (65)	149 (65)	149 (65)
Air and Noise					
Maximum DC power of fan		W	85	170	2 x 75
Maximum air flow		CFM (m^3/h)	1765 (3000)	2650 (4500)	2 x 1470 (2 x 2500)
Minimum/maximum air temperature*3		°F(°C)	-13/109 (-25/43)	-13/109 (-25/43)	-13/109 (-25/43)
Maximum sound pressure level at 3.3 ft. (1m) distance		dB(A)	41	43	44
Maximum sound power level		dB(A)	54.8	58.0	60.8
Dimensional Data					
Dimensions (HXWXD)	Height	in. (mm)	31-¼ (795)	36-½ (928)	52-⅜ (1329)
	Width	in. (mm)	46 (1165)	50-¾ (1285)	49-¼ (1250)
	Depth	in. (mm)	15-¾ (400)	18-⅛ (460)	19-½ (495)
Weight		lbs (kg)	206 (93.5)	275 (124.5)	411 (186.5)

*1 Heating capacity based on a ambient air temperature of 45°F (7°C) supply water temperature 95°F (35°C) and a 8°F (5°C) Δt
*2 COP (A5W110) Coefficient of Performance at ambient air temperature of 5°F (-15°C) supply water temperature 110°F (43.3°C)
*3 Not intended for sale in a location that may exceed 109°F (43°C) ambient temperature.

Filling the System

Water quality

Treatment for feed water should be considered in areas of known problems, such as where a high mineral content and hardness exist.

In areas where freezing might occur, an antifreeze may be added to the system water to protect the system. Please adhere to the specifications given by the antifreeze manufacturer.

Do not use automotive silicate based antifreeze. Please observe that an antifreeze/water mixture may require a backflow preventer within the automatic water feed and influence components such as diaphragm expansion tanks, radiation, etc. Maximum antifreeze content is 50%. Refer to the manufacturers specifications when determining derate based on glycol concentration.

Do not use feed what which contains sulphur. Check pH-level after some operating time. It should be in the range from 8.2 to 9.5. If it is not, please take appropriate measures. Total permissible hardness of the fill and top-up water - 70 ppm.

Do not use antifreeze other than specifically made for hot water heating systems. System also may contain components which might be negatively affected by antifreeze. Check total system frequently when filled with antifreeze. Advise system operator/ultimate owner that system is filled with a glycol mix. The heating contractor must provide a SDS (Safety Data Sheet) for the antifreeze used to the system operator/ultimate owner.

Printed on environmentally friendly (recycled and recyclable) paper.

©2025 Carrier Corp. All rights reserved

Edition Date: 02/26

Catalog No: 6241203 - 03

A Proud Member of the Carrier Family

Replaces: NEW

Manufacturer reserves the right to change, at any time, specifications and designs without notice and without obligations.