EVD5X Series B
Evaporator Coil with Power-V Technology for R-454B Refrigerant
Upflow/Downflow – Cooling and Heating

***Refer to AHRI Directory for Approved Rated Combinations.**

Product Data

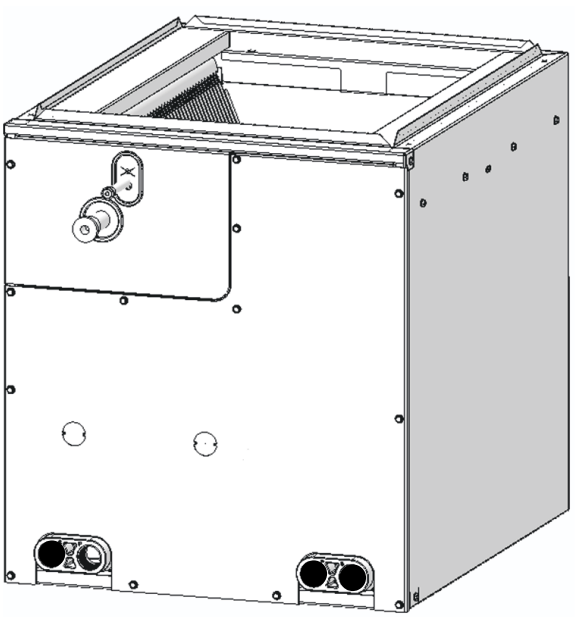

A210758C

Fig. 1 – Typical Coil

POWER-V™ TECHNOLOGY

c UL US LISTED

AHRI CERTIFIED™ www.ahridirectory.org

Use of the AHRI CertifiedTM Mark indicates a manufacturer's participation in the program. For verification of certification for individual products, go to www.ahridirectory.org.

ISO 9001:2000 QMI REGISTERED

A200449AICP

This evaporator coil incorporates proven standards for reliable system operation and performance throughout the life of this product. These quality coils, manufactured and installed as part of a total comfort system, provide AHRI-rated performance ratings and are additionally listed with UL and c-UL.

Available for use in R-454B refrigerant only, it is a cased V-coil or slope coil that is housed in a durable, 24-gauge, pre-painted cool gray cabinet. The fully insulated cabinet (foil faced with R-2.1 insulation) provides for quiet efficient operation of the evaporator coil.

DESIGN FEATURES

- Refrigerant leak detection dissipation system for added safety.
- Designed with performance in mind, this new evaporator coil offers lower pressure drops to enhance system performance and airflow characteristics.
- All coils have refrigerant-specific, factory-installed TXVs. All models are factory pre-set to approximately 10° of superheat at the suction service valve.
- The corrosion-resistant drain pan is designed of a "Polybutylene terephthalate" material (PBT) that offers unsurpassed pan strength. It is engineered with proper slope to help ensure water drainage, improved moisture removal, and home comfort.
- The drain pan is supplied with three water-tight drain plugs to prevent leakage from unused drain connections.
- Provided with industry proven sweat connections for leak-free operation to maintain system reliability. The location of the lineset connections allows for removal of the access door for easy cleaning/servicing of the coils, as well as easy access to the TXV. All models come from the factory with enough length of straight tube to accommodate braze-less compression fittings.
- Meets or exceeds burst pressure of 2100 psi, which is at least three times the maximum operating pressure it would see in actual cooling or heating application.
- This cased coil comes with factory-installed UV knockouts for quick and easy installation of UV lights.
- Comes with a "no delta plate" for easy, quick access to both sides of the coil for service and cleaning. Also, after the door is removed and refrigerant lines disconnected, the coil is removable from the front of the unit without the use of any tools.
- All B series models are shipped with A2L sensor installed. This coil does NOT contain a dissipation control board. If the paired furnace does not have integrated dissipation, a dissipation accessory kit is required. Refer to the gas furnace product data document to determine if the furnace has integrated dissipation. If it does not, refer to coil product data document for information.

WARRANTY

- Default 5-year parts limited warranty:
  - 10-year parts limited warranty with timely registration*.
    Equipment must be registered within 90 days of original installation, except in jurisdictions where warranty benefits cannot be conditioned on registration.
  - * Applies to original purchaser/homeowner and not available to subsequent owners, except in jurisdictions where laws dictate otherwise.

See Warranty certificate for complete details and restrictions.

MODEL NUMBER NOMENCLATURE

1	2	3	4	5	6	7	8	9	10	11
E	V	D	5	X	3	6	S	1	7	B

Product Description
E = Evaporator Coil

Type
V = V-Coil
S = Slope Coil

Installation Configuration
D = Vertical; M = Multi-poise

Refrigerant Type
5 = R-454B

Metering Device
X = TXV

Unit Capacity (Nom.)
18 - 23 = 1.5 Ton
24 - 29 = 2 Ton
30 - 35 = 2.5 Ton
36 - 41 = 3 Ton
42 - 47 = 3.5 Ton
48 - 51 = 4 Ton
60 - 62 = 5 Ton

Included Equipment
S = Sensor Only

Unit Width (Nom.)
14 = 14-in (325 mm)
17 = 17-in (432 mm)
21 = 21-in (533 mm)
24 = 24-in (610 mm)

Major Series
A = First
B = Second
Etc...

Table 1 – Coil Connections / Orientations

Model	Nom. Tons	Line Set Connection Tube Size, in.		Flush Fit to Furnace Width, in. (mm)	Fits Next Smaller Furnace Width			90° Rotation to Furnace (4" Min. Transition Required)	180° Rotation to Furnace
		Suction	Liquid		Equal Overhang	Offset Left	Offset Right		
EVD5X18S14B	1.5	5/8	3/8	14-3/16 (360)				ALL Upflow or Downflow	
EVD5X19S17B	1.5	5/8	3/8	17-1/2 (445)	X	X	X		
EVD5X24S14B	2	5/8	3/8	14-3/16 (360)					
EVD5X24S17B	2	5/8	3/8	17-1/2 (445)	X	X	X		
EVD5X25S14B	2	5/8	3/8	14-3/16 (360)					
EVD5X25S17B	2	5/8	3/8	17-1/2 (445)	X	X	X		
EVD5X30S14B	2.5	3/4	3/8	14-3/16 (360)					
EVD5X30S17B	2.5	3/4	3/8	17-1/2 (445)	X	X	X		
EVD5X31S17B	2.5	3/4	3/8	17-1/2 (445)	X	X	X		
EVD5X36S17B	3	3/4	3/8	17-1/2 (445)	X	X	X		
EVD5X36S21B	3	3/4	3/8	21 (533)	X	X	X		
EVD5X37S21B	3	3/4	3/8	21 (533)	X	X	X		
EVD5X38S17B	3	3/4	3/8	17-1/2 (445)	X	X	X		
EVD5X42S17B	3.5	7/8	3/8	17-1/2 (445)	X	X	X		
EVD5X42S21B	3.5	7/8	3/8	21 (533)	X	X	X		
EVD5X42S24B	3.5	7/8	3/8	24-1/2 (622)	X	X	X		
EVD5X48S21B	4	7/8	3/8	21 (533)	X	X	X		
EVD5X48S24B	4	7/8	3/8	24-1/2 (622)	X	X	X		
EVD5X49S24B	4	7/8	3/8	24-1/2 (622)	X	X	X		
EVD5X60S21B	5	7/8	3/8	21 (533)	X	X	X		
EVD5X60S24B	5	7/8	3/8	24-1/2 (622)	X	X	X		
EVD5X61S21B	5	7/8	3/8	21 (533)	X	X	X		
EVD5X61S24B	5	7/8	3/8	24-1/2 (622)	X	X	X		

Manufacturer reserves the right to change, at any time, specifications and designs without notice and without obligations.

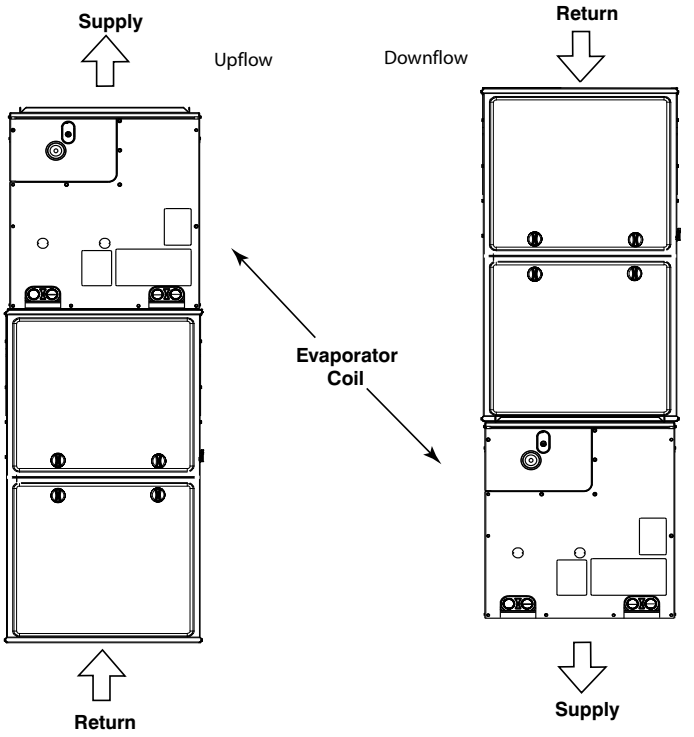

Fig. 2 – Typical Flush-Fit Coil Installation on Furnace (recommended)

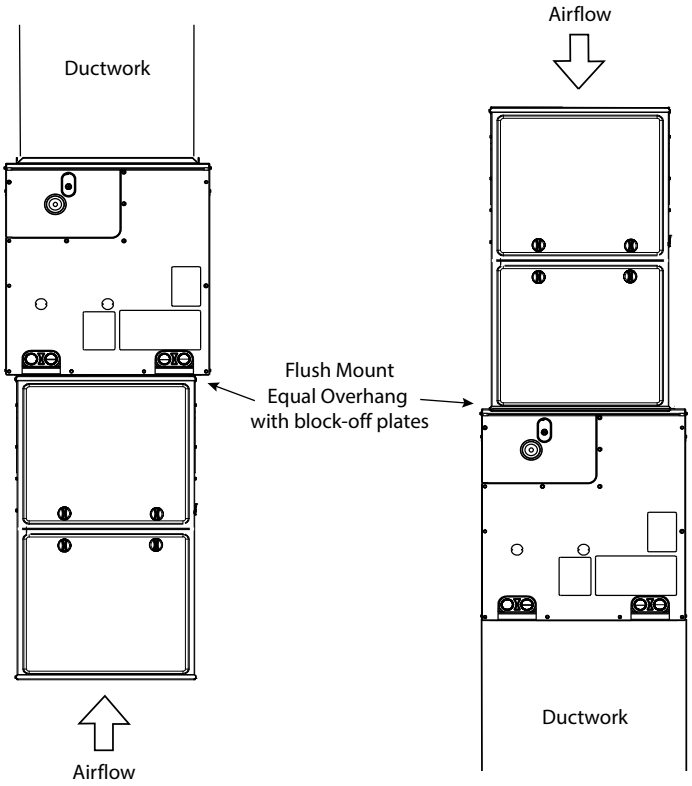

Fig. 4 – Smaller Furnace, Equal Overhang, Flush Mount (not recommended)

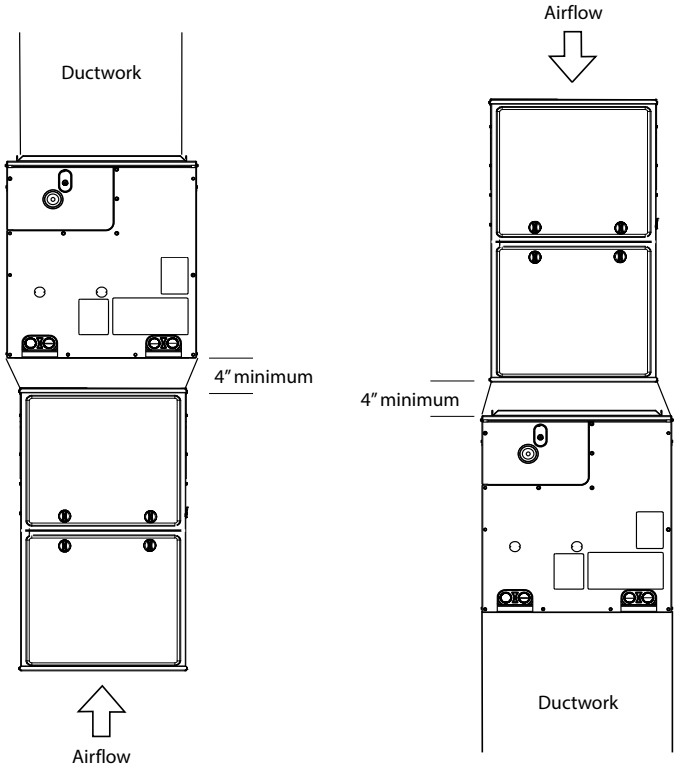

Fig. 3 – Adapter(s) Installation When Coil is Larger than Furnace (recommended)

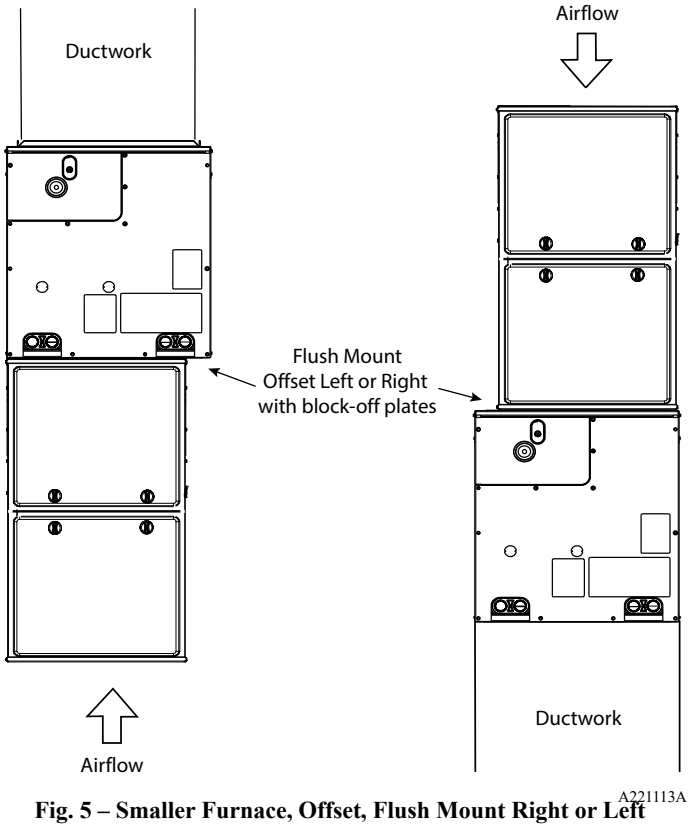

Fig. 5 – Smaller Furnace, Offset, Flush Mount Right or Left (not recommended)

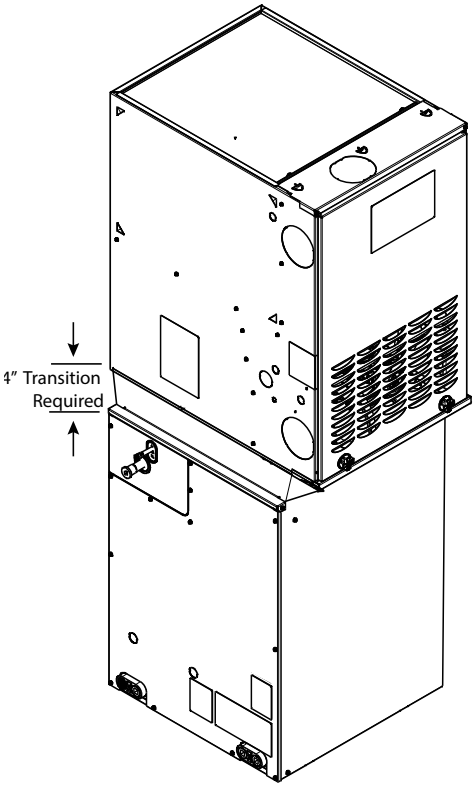

A221110A

Fig. 6 – 90° Rotation (shown in downflow)
4" Transition Required (not recommended)

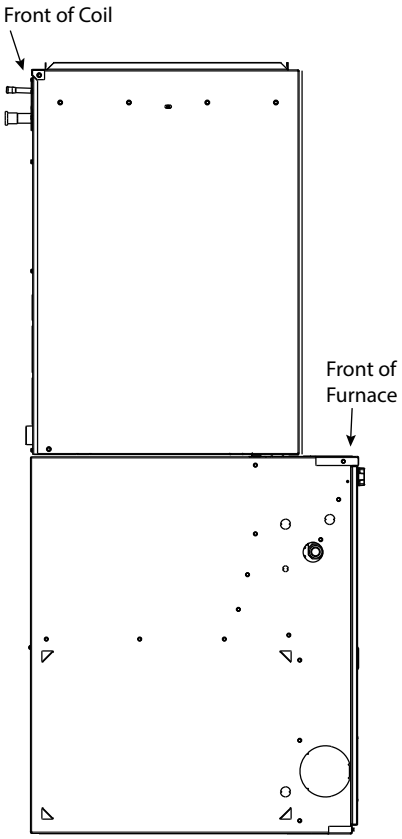

A221111

Fig. 7 – 180° Rotation (shown in upflow)
(not recommended)

Table 2 – Accessories

Part Number	Description
NAHB00101CA	Coil Adapter Kits - No Offset
NAHB00201CA	Coil Adapter Kits - Single Offset
NAHB00301CA	Coil Adapter Kits - Double Offset
ACAENCDIS01A	Dissipation Kit — Series A/B Compatible
SYSTXGRPLG10	CNN / Communicating Plug (10-pack)

DIMENSIONS

UNIT	SERIES	A		B (Cabinet Width)		C		D		E		F		H (Suction Line)		OPERATING WEIGHT		SHIPPING WEIGHT		SHIPPING HEIGHT		SHIPPING WIDTH		SHIPPING DEPTH	
		INCH	MM	INCH	MM	INCH	MM	INCH	MM	INCH	MM	INCH	MM	INCH	MM	Lbs	Kgs	Lbs	Kgs	INCH	MM	INCH	MM	INCH	MM
EVD5X18S14B	B	14 11/16	372.4	14 3/16	360.4	12 7/16	316.2	13 3/16	335.2	11 5/8	294.8	7 1/8	180.2	5/8	15.9	25.6	11.6	30.0	13.6	16.0	406.4	16.3	414.0	23.8	604.5
EVD5X19S17B	B	19 7/16	494.5	17 1/2	444.5	15 3/4	400.3	17 5/16	440.4	15 11/16	398.7	8 3/4	222.3	5/8	15.9	33.2	15.1	39.0	17.7	20.7	525.8	19.6	497.8	23.8	604.5
EVD5X24S14B	B	14 11/16	372.4	14 3/16	360.4	12 7/16	316.2	13 3/16	335.2	11 5/8	294.8	7 1/8	180.2	5/8	15.9	25.6	11.6	30.0	13.6	16.0	406.4	16.3	414.0	23.8	604.5
EVD5X24S17B	B	14 11/16	372.4	17 1/2	444.5	15 3/4	400.3	13 3/16	335.2	11 5/8	294.8	8 3/4	222.3	5/8	15.9	33.2	15.1	39.0	17.7	16.0	406.4	19.6	497.8	23.8	604.5
EVD5X25S14B	B	17 1/16	432.6	14 3/16	360.4	12 7/16	316.2	14 15/16	380.2	14	355.0	7 1/8	180.2	5/8	15.9	28.1	12.7	33.0	15.0	18.4	467.4	16.3	414.0	23.8	604.5
EVD5X25S17B	B	19 7/16	494.5	17 1/2	444.5	15 3/4	400.3	17 5/16	440.4	15 11/16	398.7	8 3/4	222.3	5/8	15.9	33.2	15.1	39.0	17.7	20.7	525.8	19.6	497.8	23.8	604.5
EVD5X30S14B	B	17 1/16	432.6	14 3/16	360.4	12 7/16	316.2	14 15/16	380.2	14	355.0	7 1/8	180.2	3/4	19.1	28.1	12.7	33.0	15.0	18.4	467.4	16.3	414.0	23.8	604.5
EVD5X30S17B	B	19 7/16	494.5	17 1/2	444.5	15 3/4	400.3	17 5/16	440.4	15 11/16	398.7	8 3/4	222.3	3/4	19.1	33.2	15.1	39.0	17.7	20.7	525.8	19.6	497.8	23.8	604.5
EVD5X31S17B	B	25 13/16	656.4	17 1/2	444.5	15 3/4	400.3	24 3/16	614.2	22 13/16	578.8	8 3/4	222.3	3/4	19.1	39.0	17.7	46.0	20.9	27.1	688.3	19.6	497.8	23.8	604.5
EVD5X36S17B	B	19 7/16	494.5	17 1/2	444.5	15 3/4	400.3	17 5/16	440.4	15 11/16	398.7	8 3/4	222.3	3/4	19.1	33.2	15.1	39.0	17.7	20.7	525.8	19.6	497.8	23.8	604.5
EVD5X38S17B	B	29 3/4	755.3	17 1/2	444.5	15 3/4	400.3	27 3/4	704.9	26 11/16	677.7	8 3/4	222.3	3/4	19.1	43.3	19.6	51.0	23.1	31.0	787.4	19.6	497.8	23.8	604.5
EVD5X42S17B	B	21 1/8	489.1	17 1/2	444.5	15 3/4	400.3	19 1/8	485.9	18 1/16	459.1	8 3/4	222.3	7/8	22.2	34.0	15.4	40.0	18.1	22.5	571.5	19.6	497.8	23.8	604.5

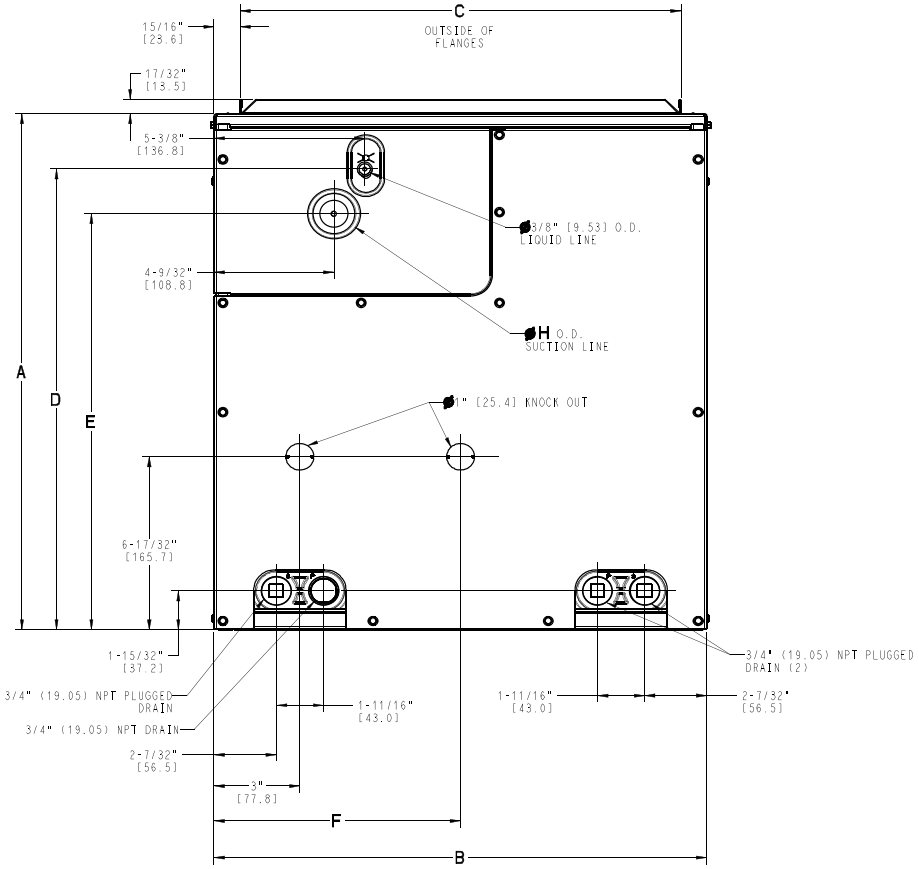

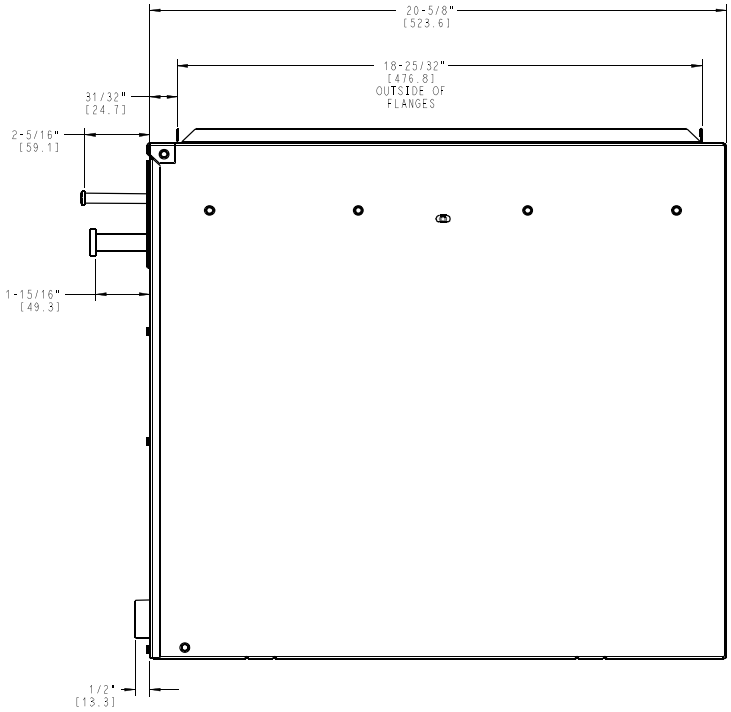

A260409

Fig. 8 – EVD5X (14" & 17" cabinet widths)

DIMENSIONS (cont)

UNIT	SERIES	A		B (Cabinet Width)		C		D		E		F		H (Suction Line)		OPERATING WEIGHT		SHIPPING WEIGHT		SHIPPING HEIGHT		SHIPPING WIDTH		SHIPPING DEPTH	
		INCH	MM	INCH	MM	INCH	MM	INCH	MM	INCH	MM	INCH	MM	INCH	MM	Lbs	Kgs	Lbs	Kgs	INCH	MM	INCH	MM	INCH	MM
EVD5X36S21B	B	19 1/16	483.4	21	533.4	19 1/4	489.2	16 7/8	427.9	16	405.8	10 1/2	266.7	3/4	19.1	34.0	15.4	40.0	18.1	20.4	518.2	23.1	586.7	23.8	604.5
EVD5X37S21B	B	21 15/16	557.9	21	533.4	19 1/4	489.2	20 1/16	510.0	18 5/16	465.0	10 1/2	266.7	3/4	19.1	37.4	17.0	44.0	20.0	23.5	596.9	23.1	586.7	23.8	604.5
EVD5X42S21B	B	19 1/16	483.4	21	533.4	19 1/4	489.2	16 7/8	427.9	16	405.8	10 1/2	266.7	7/8	22.2	34.0	15.4	40.0	18.1	20.4	518.2	23.1	586.7	23.8	604.5
EVD5X42S24B	B	26 5/16	669.0	24 1/2	622.3	22 3/4	578.1	24 3/4	629.3	23 5/16	591.4	12 1/4	311.2	7/8	22.2	43.3	19.6	51.0	23.1	27.7	703.6	26.6	675.6	23.8	604.5
EVD5X48S21B	B	21 15/16	557.9	21	533.4	19 1/4	489.2	20 1/16	510.0	18 5/16	465.0	10 1/2	266.7	7/8	22.2	37.4	17.0	44.0	20.0	23.5	596.9	23.1	586.7	23.8	604.5
EVD5X48S24B	B	22 1/16	560.8	24 1/2	622.3	22 3/4	578.1	20 3/16	513.4	19	483.2	12 1/4	311.2	7/8	22.2	39.0	17.7	46.0	20.9	23.5	596.9	26.6	675.6	23.8	604.5
EVD5X49S24B	B	26 5/16	669.0	24 1/2	622.3	22 3/4	578.1	24 5/16	616.9	22 9/16	573.2	12 1/4	311.2	7/8	22.2	43.3	19.6	51.0	23.1	27.7	703.6	26.6	675.6	23.8	604.5
EVD5X60S21B	B	29 3/4	755.3	21	533.4	19 1/4	489.2	28 1/4	717.0	26 11/16	677.7	10 1/2	266.7	7/8	22.2	45.8	20.8	54.0	24.5	31.0	787.4	23.1	586.7	23.8	604.5
EVD5X60S24B	B	26 5/16	669.0	24 1/2	622.3	22 3/4	578.1	24 3/4	629.3	23 5/16	591.4	12 1/4	311.2	7/8	22.2	43.3	19.6	51.0	23.1	27.7	703.6	26.6	675.6	23.8	604.5
EVD5X61S21B	B	35	889.6	21	533.4	19 1/4	489.2	33 1/8	841.4	31 15/16	812.0	10 1/2	266.7	7/8	22.2	50.8	23.0	60.0	27.2	36.3	922.0	23.1	586.7	23.8	604.5
EVD5X61S24B	B	35	889.6	24 1/2	622.3	22 3/4	578.1	33 7/16	850.0	31 1/4	793.8	12 1/4	311.2	7/8	22.2	55.9	25.4	66.0	29.9	36.3	922.0	26.6	675.6	23.8	604.5

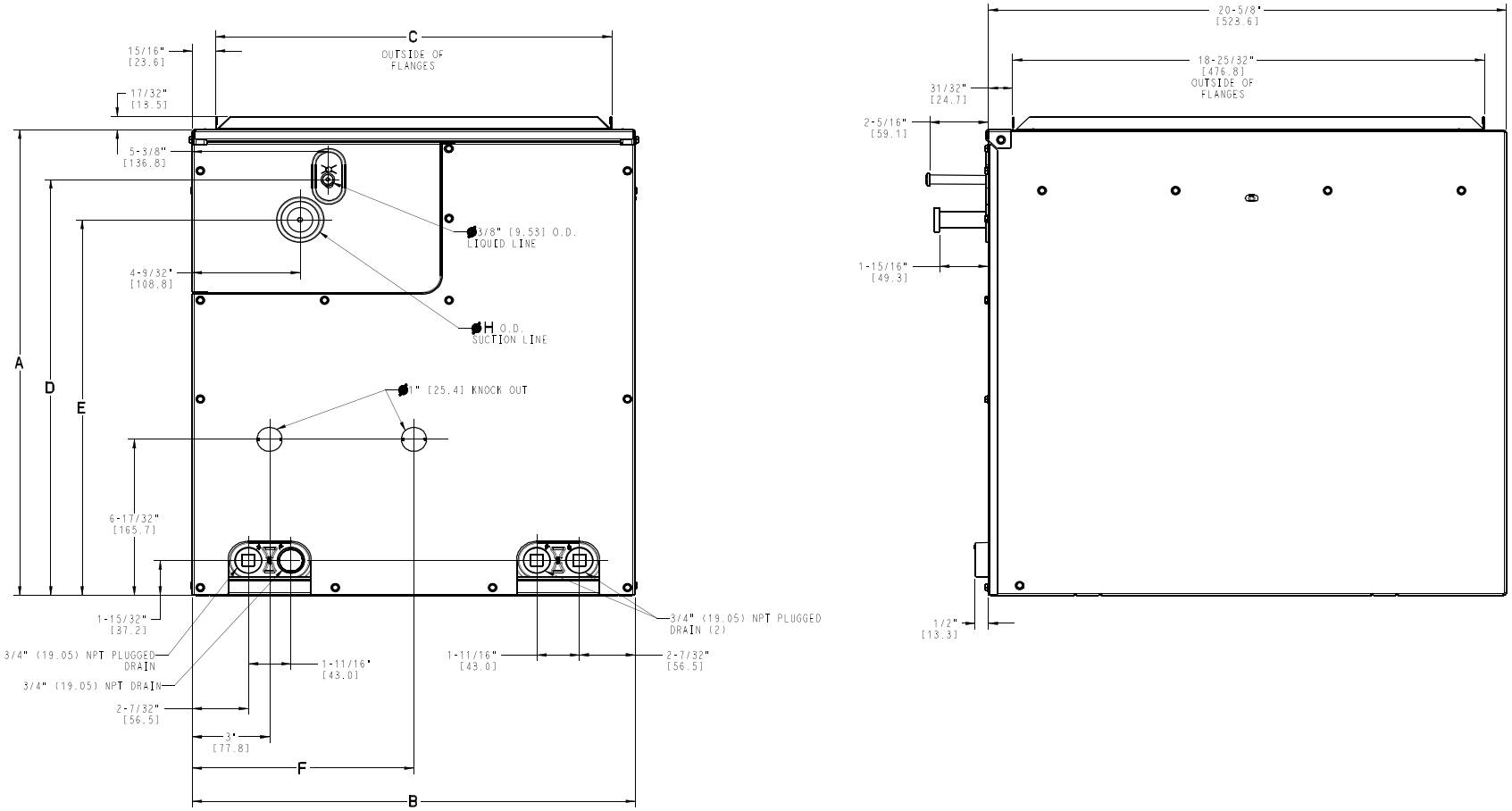

A260414

Fig. 9 – EVD5X (21" & 24" cabinet widths)

INDOOR PERFORMANCE DATA - COIL STATIC PRESSURE DROP (in. w.c.) BY SCFM – wet coil

Unit Size	450	500	550	600	650	700	750	800	850	900	950	1000	1050	1100	1150	1200	1250	1300	1350	1400	1450	1500	1550	1600	1650	1700	1750	1800	1850	1900	1950	2000	2050	2100	2150	2200	2250	2300	2350	2400	2450	2500
EVD5X18S14B	.12	.14	.16	.19	.22	.24	.27																																				
EVD5X19S17B	.07	.08	.10	.11	.13	.14	.16																																				
EVD5X24S14B				.19	.22	.24	.27	.31	.34	.37	.41	.45																														
EVD5X24S17B				.13	.15	.17	.19	.21	.23	.25	.28	.30																														
EVD5X25M14A				.16	.18	.21	.24	.26	.30	.33	.36	.40																														
EVD5X25S17B				.11	.13	.14	.16	.18	.20	.22	.24	.26																														
EVD5X30S14B							.24	.26	.30	.33	.36	.40	.44	.48	.52	.56	.60																									
EVD5X30S17B							.16	.18	.20	.22	.24	.26	.28	.30	.33	.35	.38																									
EVD5X31S17B							.11	.13	.14	.16	.17	.19	.20	.22	.24	.26	.28																									
EVD5X36S17B										.22	.24	.26	.28	.30	.33	.35	.38	.41	.43	.46	.49	.52																				
EVD5X36S21B										.15	.16	.18	.19	.21	.22	.24	.26	.28	.29	.31	.33	.35																				
EVD5X37S21B										.16	.17	.19	.20	.22	.23	.25	.27	.29	.31	.32	.34	.36																				
EVD5X38S17B										.14	.15	.17	.18	.20	.22	.23	.25	.27	.29	.31	.33	.35																				
EVD5X42S17B													.27	.29	.32	.34	.37	.40	.43	.46	.49	.52	.55	.59	.62	.66	.69															
EVD5X42S21B													.19	.21	.22	.24	.26	.28	.29	.31	.33	.35	.38	.40	.42	.44	.47															
EVD5X42S24B													.11	.12	.13	.14	.15	.16	.17	.18	.19	.21	.22	.23	.24	.26	.27															
EVD5X48S21B																.25	.27	.29	.31	.32	.34	.36	.39	.41	.43	.45	.47	.50	.52	.55	.57	.60										
EVD5X48S24B																.17	.19	.20	.21	.22	.24	.25	.27	.28	.30	.31	.33	.35	.36	.38	.40	.42										
EVD5X49S24B																.14	.15	.16	.17	.18	.19	.21	.22	.23	.24	.26	.27	.29	.30	.32	.33	.35										
EVD5X60S21B																						.25	.27	.28	.30	.31	.33	.35	.37	.38	.40	.42	.44	.46	.48	.50	.53	.55	.57	.59	.61	.64
EVD5X60S24B																						.21	.22	.23	.24	.26	.27	.29	.30	.32	.33	.35	.36	.38	.40	.41	.43	.45	.47	.49	.50	.52
EVD5X61S21B																						.23	.25	.26	.28	.29	.31	.32	.34	.36	.37	.39	.41	.43	.45	.47	.49	.51	.53	.55	.57	.59
EVD5X61S24B																						.17	.18	.19	.20	.21	.22	.24	.25	.26	.27	.28	.30	.31	.32	.34	.35	.37	.38	.40	.41	.43

Manufacturer reserves the right to change, at any time, specifications and designs without notice and without obligations.

Table 3 – Cooling Capacities (MBH) – R-454B

INDOOR COIL AIR		SATURATED TEMPERATURE LEAVING EVAPORATOR (deg F)														
		35			40			45			50			55		
CFM	EWB	TC	SHC	BF	TC	SHC	BF	TC	SHC	BF	TC	SHC	BF	TC	SHC	BF
SIZE1814																
450	72	32.33	16.37	0.00	29.42	14.73	0.00	25.84	12.98	0.00	21.83	11.20	0.25	17.26	9.21	0.23
	67	26.69	16.93	0.21	23.50	15.18	0.20	20.00	13.36	0.20	15.94	11.34	0.21	11.68	9.30	0.23
	62	21.27	17.16	0.18	18.22	15.37	0.19	14.67	13.38	0.20	11.12	11.11	0.20	9.40	9.40	0.31
600	72	38.94	19.67	0.00	35.98	17.92	0.00	31.74	15.89	0.00	26.92	13.77	0.31	21.49	11.47	0.27
	67	32.77	20.73	0.29	28.93	18.71	0.25	24.71	16.55	0.24	19.84	14.18	0.25	14.56	11.68	0.27
	62	26.18	21.23	0.22	22.68	19.22	0.23	18.22	16.80	0.24	14.16	14.15	0.23	11.66	11.66	0.36
750	72	45.01	22.59	0.00	41.48	20.57	0.00	36.68	18.33	0.00	31.11	15.96	0.33	25.06	13.38	0.31
	67	37.80	23.94	0.33	33.46	21.68	0.29	28.69	19.29	0.28	23.13	16.64	0.28	16.89	13.69	0.30
	62	30.39	24.78	0.26	26.31	22.45	0.27	21.23	19.79	0.27	17.13	17.13	0.25	14.18	14.18	0.38

INDOOR COIL AIR		SATURATED TEMPERATURE LEAVING EVAPORATOR (deg F)														
		35			40			45			50			55		
CFM	EWB	TC	SHC	BF	TC	SHC	BF	TC	SHC	BF	TC	SHC	BF	TC	SHC	BF
SIZE1917																
450	72	31.49	15.94	0.00	28.72	14.43	0.00	25.39	12.79	0.00	21.58	11.04	0.23	17.27	9.23	0.15
	67	25.99	16.46	0.19	22.95	14.82	0.14	19.66	13.14	0.13	15.89	11.29	0.13	11.80	9.36	0.15
	62	20.79	16.77	0.11	18.00	15.15	0.12	14.59	13.31	0.13	11.14	11.55	0.14	9.35	9.35	0.25
600	72	38.28	19.56	0.00	35.39	17.72	0.00	31.49	15.82	0.00	26.95	13.78	0.26	21.72	11.61	0.19
	67	32.18	20.36	0.25	28.55	18.48	0.18	24.49	16.43	0.17	19.89	14.23	0.17	14.93	11.96	0.18
	62	25.88	21.00	0.15	22.40	19.01	0.16	18.27	16.83	0.16	14.08	14.07	0.15	11.66	11.66	0.29
750	72	44.27	22.35	0.00	41.12	20.53	0.00	36.66	18.39	0.00	31.49	16.11	0.29	25.51	13.67	0.23
	67	37.38	23.70	0.27	33.27	21.61	0.22	28.69	19.35	0.20	23.41	16.85	0.20	17.58	14.20	0.21
	62	30.16	24.65	0.19	26.25	22.47	0.19	21.44	19.97	0.19	17.12	17.09	0.18	14.34	14.34	0.30

INDOOR COIL AIR		SATURATED TEMPERATURE LEAVING EVAPORATOR (deg F)														
		35			40			45			50			55		
CFM	EWB	TC	SHC	BF	TC	SHC	BF	TC	SHC	BF	TC	SHC	BF	TC	SHC	BF
SIZE2414																
600	72	43.25	21.42	0.00	39.14	19.33	0.00	34.45	17.13	0.00	29.20	14.84	0.31	23.31	12.36	0.27
	67	35.54	22.33	0.29	31.38	20.15	0.25	26.81	17.83	0.24	21.52	15.28	0.25	15.79	12.58	0.27
	62	28.40	22.87	0.22	24.60	20.71	0.23	19.78	18.12	0.24	15.36	15.34	0.23	12.65	12.65	0.36
800	72	50.50	25.13	0.00	46.76	23.02	0.00	41.40	20.53	0.00	35.17	17.92	0.35	28.36	15.05	0.32
	67	42.51	26.80	0.33	37.76	24.32	0.30	32.40	21.66	0.30	26.19	18.75	0.29	19.22	15.51	0.31
	62	34.30	27.83	0.28	29.74	25.29	0.28	24.01	22.31	0.28	19.50	19.50	0.26	16.05	16.05	0.39
1000	72	57.91	28.63	0.00	53.24	26.12	0.00	47.24	23.42	0.00	40.30	20.55	0.38	32.95	17.47	0.36
	67	48.41	30.63	0.36	43.14	27.89	0.35	37.17	24.99	0.34	29.99	21.68	0.33	22.20	18.14	0.34
	62	39.32	32.16	0.32	33.85	29.23	0.32	27.60	25.99	0.32	22.91	22.91	0.31	19.20	19.20	0.41

Table 3 – Cooling Capacities (MBH) – R-454B (Continued)

INDOOR COIL AIR		SATURATED TEMPERATURE LEAVING EVAPORATOR (deg F)														
		35			40			45			50			55		
CFM	EWB	TC	SHC	BF	TC	SHC	BF	TC	SHC	BF	TC	SHC	BF	TC	SHC	BF
SIZE2417																
600	72	42.67	21.23	0.00	38.94	19.26	0.00	34.35	17.08	0.00	29.22	14.84	0.30	23.34	12.37	0.26
	67	35.37	22.23	0.28	31.20	20.03	0.24	26.73	17.79	0.23	21.51	15.27	0.23	15.83	12.61	0.25
	62	28.32	22.80	0.21	24.31	20.51	0.22	19.79	18.12	0.22	15.27	15.25	0.22	12.67	12.66	0.34
800	72	50.41	25.11	0.00	46.62	22.97	0.00	41.33	20.51	0.00	35.21	17.94	0.33	28.46	15.12	0.31
	67	42.46	26.73	0.32	37.68	24.27	0.29	32.39	21.66	0.28	26.20	18.75	0.28	19.46	15.68	0.29
	62	34.27	27.81	0.26	29.71	25.27	0.26	24.07	22.34	0.27	19.48	19.48	0.25	16.16	16.15	0.37
1000	72	57.71	28.53	0.00	53.10	26.06	0.00	47.17	23.39	0.00	40.30	20.56	0.37	33.05	17.53	0.35
	67	48.27	30.56	0.35	43.05	27.85	0.33	37.12	24.98	0.32	30.13	21.77	0.32	22.35	18.25	0.33
	62	39.08	32.01	0.30	34.00	29.21	0.31	27.61	26.00	0.30	22.90	22.90	0.29	19.26	19.26	0.40

INDOOR COIL AIR		SATURATED TEMPERATURE LEAVING EVAPORATOR (deg F)														
		35			40			45			50			55		
CFM	EWB	TC	SHC	BF	TC	SHC	BF	TC	SHC	BF	TC	SHC	BF	TC	SHC	BF
SIZE2514																
600	72	41.70	20.91	0.00	38.50	19.09	0.00	34.11	16.99	0.00	29.07	14.77	0.28	23.31	12.36	0.23
	67	35.01	21.99	0.28	31.00	19.91	0.21	26.55	17.67	0.21	21.48	15.24	0.21	15.87	12.64	0.22
	62	28.11	22.64	0.19	24.35	20.51	0.19	19.70	18.03	0.20	15.24	15.23	0.19	12.62	12.62	0.32
800	72	50.04	24.95	0.00	46.38	22.88	0.00	41.20	20.47	0.00	35.30	17.94	0.33	28.51	15.16	0.28
	67	42.17	26.57	0.30	37.47	24.17	0.27	32.28	21.61	0.26	26.23	18.79	0.25	19.43	15.67	0.26
	62	34.02	27.64	0.24	29.54	25.13	0.24	24.03	22.31	0.24	19.46	19.46	0.22	16.33	16.33	0.34
1000	72	57.39	28.40	0.00	52.79	25.95	0.00	47.01	23.34	0.00	40.24	20.55	0.35	33.05	17.56	0.33
	67	48.01	30.38	0.33	42.77	27.70	0.31	36.95	24.90	0.30	30.17	21.81	0.29	22.45	18.32	0.30
	62	38.89	31.90	0.28	33.88	29.16	0.28	27.67	26.05	0.28	22.93	22.93	0.26	19.31	19.31	0.37

INDOOR COIL AIR		SATURATED TEMPERATURE LEAVING EVAPORATOR (deg F)														
		35			40			45			50			55		
CFM	EWB	TC	SHC	BF	TC	SHC	BF	TC	SHC	BF	TC	SHC	BF	TC	SHC	BF
SIZE2517																
600	72	41.73	20.82	0.00	38.18	18.94	0.00	33.89	16.90	0.00	28.99	14.72	0.27	23.34	12.39	0.19
	67	34.63	21.75	0.25	30.72	19.73	0.18	26.33	17.54	0.17	21.40	15.19	0.17	16.04	12.75	0.18
	62	27.84	22.42	0.15	24.02	20.26	0.16	19.64	17.95	0.16	15.08	15.07	0.16	12.54	12.54	0.29
800	72	49.66	24.85	0.00	46.16	22.84	0.00	41.16	20.49	0.00	35.37	17.97	0.30	28.69	15.27	0.24
	67	41.99	26.45	0.28	37.35	24.11	0.23	32.24	21.60	0.22	26.31	18.84	0.21	19.78	15.91	0.22
	62	33.87	27.53	0.20	29.49	25.11	0.20	24.10	22.34	0.20	19.40	19.40	0.18	16.25	16.25	0.31
1000	72	57.22	28.39	0.00	52.79	26.02	0.00	47.16	23.47	0.00	40.65	20.71	0.33	33.39	17.76	0.28
	67	47.97	30.35	0.30	42.81	27.78	0.27	37.09	25.03	0.26	30.41	21.99	0.25	22.98	18.73	0.25
	62	38.90	31.93	0.24	33.91	29.22	0.24	27.79	26.16	0.24	22.97	22.97	0.22	19.48	19.48	0.34

Table 3 – Cooling Capacities (MBH) – R-454B (Continued)

INDOOR COIL AIR		SATURATED TEMPERATURE LEAVING EVAPORATOR (deg F)														
		35			40			45			50			55		
CFM	EWB	TC	SHC	BF	TC	SHC	BF	TC	SHC	BF	TC	SHC	BF	TC	SHC	BF
SIZE3014																
750	72	52.98	26.54	0.00	48.73	24.12	0.00	42.98	21.36	0.00	36.59	18.54	0.36	29.30	15.53	0.27
	67	44.33	27.78	0.00	39.04	25.04	0.26	33.41	22.21	0.24	26.94	19.14	0.24	19.95	15.94	0.25
	62	35.48	28.53	0.23	30.38	25.64	0.23	24.69	22.63	0.23	19.19	19.19	0.22	16.06	16.06	0.34
1000	72	63.77	31.71	0.00	58.72	28.91	0.00	51.92	25.71	0.00	44.24	22.41	0.40	35.93	18.98	0.33
	67	53.32	33.42	0.00	47.11	30.27	0.32	40.41	26.97	0.30	32.70	23.39	0.29	24.16	19.54	0.30
	62	42.86	34.67	0.28	37.04	31.43	0.28	30.01	27.86	0.28	24.41	24.41	0.25	20.46	20.46	0.36
1250	72	73.25	36.12	0.00	67.27	32.96	0.00	59.56	29.45	0.00	50.56	25.72	0.40	41.33	21.88	0.37
	67	61.07	38.36	0.43	54.13	34.88	0.36	46.49	31.18	0.34	37.64	27.15	0.33	27.91	22.82	0.33
	62	49.17	40.08	0.32	42.51	36.40	0.32	34.41	32.35	0.32	28.63	28.63	0.29	24.08	24.08	0.40

INDOOR COIL AIR		SATURATED TEMPERATURE LEAVING EVAPORATOR (deg F)														
		35			40			45			50			55		
CFM	EWB	TC	SHC	BF	TC	SHC	BF	TC	SHC	BF	TC	SHC	BF	TC	SHC	BF
SIZE3017																
750	72	51.80	25.47	0.00	47.54	23.29	0.00	42.33	20.89	0.00	36.35	18.30	0.29	29.45	15.52	0.23
	67	43.15	26.92	0.27	38.40	24.54	0.22	33.12	21.97	0.20	27.02	19.14	0.20	20.30	16.13	0.21
	62	34.82	28.00	0.19	30.31	25.52	0.19	24.75	22.68	0.19	19.89	19.89	0.17	16.55	16.54	0.30
1000	72	61.05	30.06	0.00	56.49	27.60	0.00	50.50	24.91	0.00	43.54	22.00	0.33	35.79	18.88	0.28
	67	51.33	32.22	0.30	45.85	29.51	0.27	39.74	26.60	0.26	32.61	23.39	0.25	24.66	19.94	0.25
	62	41.66	33.93	0.24	36.34	31.07	0.24	29.79	27.83	0.24	24.67	24.67	0.22	20.89	20.89	0.34
1250	72	69.22	33.80	0.00	63.60	31.00	0.00	57.02	28.21	0.00	49.37	25.04	0.36	40.79	21.64	0.32
	67	57.83	36.56	0.33	51.79	33.60	0.31	45.04	30.45	0.30	37.11	26.97	0.29	28.03	23.04	0.29
	62	47.01	38.84	0.28	41.23	35.82	0.28	34.00	32.36	0.27	28.81	28.81	0.27	24.61	24.61	0.37

INDOOR COIL AIR		SATURATED TEMPERATURE LEAVING EVAPORATOR (deg F)														
		35			40			45			50			55		
CFM	EWB	TC	SHC	BF	TC	SHC	BF	TC	SHC	BF	TC	SHC	BF	TC	SHC	BF
SIZE3117																
750	72	52.04	26.02	0.00	47.61	23.67	0.00	42.22	21.06	0.00	36.22	18.37	0.31	29.52	15.57	0.19
	67	43.06	27.04	0.00	38.19	24.47	0.18	32.82	21.84	0.15	26.74	18.97	0.15	20.12	16.01	0.15
	62	34.54	27.78	0.14	29.97	25.24	0.14	24.41	22.33	0.14	18.78	18.78	0.13	15.80	15.80	0.26
1000	72	62.29	31.10	0.00	57.83	28.60	0.00	51.56	25.66	0.00	44.36	22.50	0.33	36.32	19.23	0.23
	67	52.49	33.03	0.30	46.60	29.98	0.23	40.23	26.93	0.20	32.89	23.56	0.19	24.84	20.02	0.19
	62	42.30	34.34	0.18	36.71	31.24	0.18	30.05	27.86	0.18	24.26	24.26	0.15	20.49	20.49	0.28
1250	72	71.92	35.61	0.00	66.44	32.75	0.00	59.38	29.53	0.00	51.20	26.01	0.35	42.06	22.35	0.27
	67	60.24	38.05	0.31	53.68	34.72	0.26	46.43	31.29	0.24	38.10	27.54	0.23	28.92	23.57	0.22
	62	48.64	39.87	0.22	42.38	36.49	0.22	34.74	32.70	0.21	28.78	28.78	0.19	24.42	24.42	0.31

Table 3 – Cooling Capacities (MBH) – R-454B (Continued)

INDOOR COIL AIR		SATURATED TEMPERATURE LEAVING EVAPORATOR (deg F)														
		35			40			45			50			55		
CFM	EWB	TC	SHC	BF	TC	SHC	BF	TC	SHC	BF	TC	SHC	BF	TC	SHC	BF
SIZE3617																
900	72	63.59	31.40	0.00	58.07	28.55	0.00	51.34	25.37	0.00	43.91	22.13	0.37	35.70	18.77	0.27
	67	52.65	32.87	0.00	46.50	29.71	0.26	39.95	26.51	0.24	32.45	23.03	0.23	24.29	19.40	0.23
	62	42.27	33.95	0.22	36.52	30.74	0.22	29.68	27.25	0.22	23.68	23.68	0.19	19.95	19.95	0.32
1200	72	75.07	36.98	0.00	69.27	33.86	0.00	61.53	30.33	0.00	52.72	26.57	0.40	42.67	22.59	0.31
	67	62.84	39.30	0.40	55.73	35.76	0.31	48.01	32.04	0.29	39.11	28.01	0.28	29.21	23.66	0.28
	62	50.60	41.03	0.27	43.93	37.43	0.27	35.83	33.40	0.27	29.58	29.58	0.24	24.98	24.98	0.35
1500	72	85.66	41.83	0.00	78.70	38.35	0.00	70.07	34.52	0.00	60.10	30.33	0.42	49.24	26.05	0.36
	67	71.25	44.79	0.39	63.32	41.02	0.34	54.87	36.89	0.33	44.71	32.37	0.32	33.51	27.52	0.32
	62	57.64	47.24	0.31	49.81	43.16	0.31	40.84	38.67	0.31	34.51	34.51	0.29	29.27	29.27	0.39

INDOOR COIL AIR		SATURATED TEMPERATURE LEAVING EVAPORATOR (deg F)														
		35			40			45			50			55		
CFM	EWB	TC	SHC	BF	TC	SHC	BF	TC	SHC	BF	TC	SHC	BF	TC	SHC	BF
SIZE3621																
900	72	63.59	31.40	0.00	58.07	28.55	0.00	51.34	25.37	0.00	43.91	22.13	0.37	35.70	18.77	0.27
	67	52.65	32.87	0.00	46.50	29.71	0.26	39.95	26.51	0.24	32.45	23.03	0.23	24.29	19.40	0.23
	62	42.27	33.95	0.22	36.52	30.74	0.22	29.68	27.25	0.22	23.68	23.68	0.19	19.95	19.95	0.32
1200	72	75.07	36.98	0.00	69.27	33.86	0.00	61.53	30.33	0.00	52.72	26.57	0.40	42.67	22.59	0.31
	67	62.84	39.30	0.40	55.73	35.76	0.31	48.01	32.04	0.29	39.11	28.01	0.28	29.21	23.66	0.28
	62	50.60	41.03	0.27	43.93	37.43	0.27	35.83	33.40	0.27	29.58	29.58	0.24	24.98	24.98	0.35
1500	72	85.66	41.83	0.00	78.70	38.35	0.00	70.07	34.52	0.00	60.10	30.33	0.42	49.24	26.05	0.36
	67	71.25	44.79	0.39	63.32	41.02	0.34	54.87	36.89	0.33	44.71	32.37	0.32	33.51	27.52	0.32
	62	57.64	47.24	0.31	49.81	43.16	0.31	40.84	38.67	0.31	34.51	34.51	0.29	29.27	29.27	0.39

INDOOR COIL AIR		SATURATED TEMPERATURE LEAVING EVAPORATOR (deg F)														
		35			40			45			50			55		
CFM	EWB	TC	SHC	BF	TC	SHC	BF	TC	SHC	BF	TC	SHC	BF	TC	SHC	BF
SIZE3721																
900	72	62.73	30.95	0.00	57.37	28.20	0.00	51.00	25.22	0.00	43.72	22.02	0.34	35.63	18.70	0.24
	67	52.03	32.46	0.00	46.17	29.47	0.23	39.66	26.31	0.21	32.39	22.96	0.20	24.35	19.40	0.20
	62	41.84	33.59	0.19	36.30	30.56	0.19	29.58	27.12	0.19	23.46	23.42	0.17	19.76	19.76	0.29
1200	72	74.12	36.53	0.00	68.70	33.62	0.00	61.25	30.22	0.00	52.72	26.58	0.37	43.15	22.74	0.29
	67	62.36	39.04	0.34	55.46	35.58	0.28	47.90	32.01	0.26	39.17	28.08	0.25	29.58	23.93	0.24
	62	50.34	40.86	0.24	43.71	37.23	0.24	35.78	33.35	0.23	29.49	29.49	0.21	25.01	25.01	0.32
1500	72	83.38	40.94	0.00	77.83	37.97	0.00	69.56	34.30	0.00	60.07	30.36	0.39	49.37	26.13	0.33
	67	70.71	44.46	0.36	63.00	40.68	0.32	54.60	36.76	0.30	44.81	32.45	0.29	33.74	27.69	0.28
	62	57.16	46.91	0.28	49.90	43.09	0.28	40.87	38.71	0.27	34.55	34.55	0.26	29.45	29.45	0.36

Table 3 – Cooling Capacities (MBH) – R-454B (Continued)

INDOOR COIL AIR		SATURATED TEMPERATURE LEAVING EVAPORATOR (deg F)														
		35			40			45			50			55		
CFM	EWB	TC	SHC	BF	TC	SHC	BF	TC	SHC	BF	TC	SHC	BF	TC	SHC	BF
SIZE3817																
900	72	60.47	29.96	0.00	55.64	27.53	0.00	49.77	24.84	0.00	43.04	21.92	0.29	35.19	18.82	0.18
	67	50.49	31.48	0.25	45.12	28.74	0.19	39.05	25.86	0.16	32.16	22.77	0.15	24.63	19.52	0.15
	62	40.91	32.59	0.14	35.70	29.76	0.14	29.51	26.68	0.14	23.44	23.44	0.13	20.00	20.00	0.25
1200	72	72.23	35.77	0.00	67.03	33.14	0.00	60.22	30.11	0.00	52.33	26.79	0.31	43.00	23.19	0.23
	67	60.88	38.21	0.26	54.64	35.11	0.23	47.53	31.84	0.20	39.40	28.27	0.19	30.37	24.48	0.19
	62	49.57	39.99	0.19	43.50	36.83	0.18	36.03	33.19	0.18	29.87	29.87	0.16	25.71	25.71	0.28
1500	72	82.19	40.55	0.00	76.35	37.75	0.00	68.75	34.49	0.00	59.99	30.91	0.33	49.94	27.02	0.27
	67	69.32	43.80	0.29	62.40	40.49	0.26	54.55	36.96	0.24	45.35	33.01	0.23	35.08	28.74	0.22
	62	56.70	46.40	0.22	49.69	42.89	0.22	41.57	38.98	0.21	35.30	35.30	0.21	30.57	30.57	0.32

INDOOR COIL AIR		SATURATED TEMPERATURE LEAVING EVAPORATOR (deg F)														
		35			40			45			50			55		
CFM	EWB	TC	SHC	BF	TC	SHC	BF	TC	SHC	BF	TC	SHC	BF	TC	SHC	BF
SIZE4217																
1050	72	72.79	35.96	0.00	66.44	32.76	0.00	59.05	29.40	0.00	50.63	25.77	0.00	41.46	22.12	0.28
	67	60.41	37.50	0.00	53.60	34.10	0.28	46.16	30.56	0.25	37.81	26.81	0.24	28.68	22.84	0.24
	62	48.71	38.67	0.23	42.37	35.27	0.23	34.73	31.47	0.23	28.35	28.35	0.19	24.01	24.01	0.32
1400	72	86.06	42.51	0.00	79.51	39.10	0.00	70.83	35.27	0.00	60.99	31.14	0.43	49.69	26.79	0.33
	67	72.17	45.01	0.00	64.32	41.15	0.33	55.65	37.14	0.30	45.68	32.74	0.29	34.68	28.05	0.29
	62	58.57	46.95	0.29	50.97	42.87	0.29	41.75	38.42	0.28	35.17	35.17	0.25	30.02	30.02	0.36
1750	72	98.49	48.34	0.00	90.70	44.60	0.00	80.88	40.34	0.00	69.84	35.84	0.44	57.10	31.01	0.36
	67	82.43	51.65	0.43	73.46	47.33	0.37	63.70	42.84	0.35	52.32	37.94	0.33	39.95	32.77	0.33
	62	66.86	54.17	0.33	58.11	49.74	0.32	48.08	44.89	0.32	41.11	41.11	0.30	35.30	35.30	0.40

INDOOR COIL AIR		SATURATED TEMPERATURE LEAVING EVAPORATOR (deg F)														
		35			40			45			50			55		
CFM	EWB	TC	SHC	BF	TC	SHC	BF	TC	SHC	BF	TC	SHC	BF	TC	SHC	BF
SIZE4221																
1050	72	73.11	36.08	0.00	66.78	32.92	0.00	59.21	29.44	0.00	50.72	25.82	0.00	41.50	22.15	0.30
	67	60.66	37.64	0.00	53.71	34.17	0.30	46.27	30.62	0.27	37.85	26.84	0.26	28.70	22.89	0.26
	62	48.94	38.84	0.25	42.49	35.36	0.25	34.73	31.48	0.24	28.52	28.52	0.21	24.08	24.08	0.33
1400	72	86.32	42.59	0.00	79.81	39.25	0.00	71.04	35.35	0.00	60.94	31.12	0.45	49.64	26.77	0.34
	67	72.47	45.18	0.00	64.54	41.29	0.35	55.77	37.20	0.32	45.63	32.71	0.31	34.60	28.00	0.31
	62	58.71	47.06	0.30	51.10	42.97	0.30	41.87	38.53	0.29	35.24	35.24	0.27	30.07	30.07	0.38
1750	72	98.63	48.40	0.00	90.88	44.64	0.00	81.04	40.41	0.00	69.76	35.80	0.46	56.84	30.91	0.38
	67	82.58	51.72	0.44	73.67	47.44	0.38	63.83	42.91	0.36	52.42	38.01	0.35	39.81	32.68	0.34
	62	67.10	54.33	0.34	58.23	49.85	0.33	48.08	44.87	0.33	41.09	41.09	0.32	35.22	35.22	0.42

Table 3 – Cooling Capacities (MBH) – R-454B (Continued)

INDOOR COIL AIR		SATURATED TEMPERATURE LEAVING EVAPORATOR (deg F)														
		35			40			45			50			55		
CFM	EWB	TC	SHC	BF	TC	SHC	BF	TC	SHC	BF	TC	SHC	BF	TC	SHC	BF
SIZE4224																
1050	72	71.46	35.31	0.00	65.56	32.37	0.00	58.52	29.15	0.00	50.47	25.67	0.00	41.15	22.01	0.22
	67	59.50	37.02	0.00	53.05	33.74	0.23	45.82	30.32	0.20	37.66	26.68	0.18	28.79	22.87	0.18
	62	48.10	38.24	0.18	41.88	34.88	0.18	34.54	31.28	0.17	28.03	28.03	0.14	23.80	23.80	0.27
1400	72	85.21	42.02	0.00	78.79	38.82	0.00	70.52	35.16	0.00	61.10	31.22	0.37	50.46	27.03	0.28
	67	71.50	44.69	0.34	63.99	40.99	0.27	55.53	37.10	0.25	45.82	32.87	0.23	35.12	28.35	0.23
	62	58.07	46.71	0.23	50.83	42.93	0.22	42.00	38.69	0.22	35.05	35.05	0.20	30.11	30.11	0.31
1750	72	96.97	47.60	0.00	89.61	44.16	0.00	80.36	40.17	0.00	69.88	35.90	0.38	57.93	31.28	0.32
	67	81.38	51.18	0.35	72.90	47.07	0.31	63.54	42.89	0.29	52.61	38.23	0.27	40.41	33.13	0.27
	62	66.25	53.97	0.27	57.83	49.77	0.26	48.11	45.08	0.26	41.11	41.11	0.24	35.54	35.54	0.35

INDOOR COIL AIR		SATURATED TEMPERATURE LEAVING EVAPORATOR (deg F)														
		35			40			45			50			55		
CFM	EWB	TC	SHC	BF	TC	SHC	BF	TC	SHC	BF	TC	SHC	BF	TC	SHC	BF
SIZE4821																
1200	72	82.67	40.54	0.00	75.74	37.12	0.00	67.32	33.31	0.00	58.01	29.40	0.00	47.62	25.30	0.29
	67	68.76	42.55	0.00	61.07	38.72	0.29	52.81	34.90	0.26	43.36	30.72	0.25	33.06	26.35	0.24
	62	55.61	44.11	0.24	48.35	40.20	0.24	39.74	36.06	0.23	32.85	32.85	0.20	27.90	27.90	0.32
1600	72	97.33	47.62	0.00	89.94	44.01	0.00	80.33	39.82	0.00	69.32	35.28	0.43	56.68	30.51	0.33
	67	81.71	50.84	0.40	72.87	46.55	0.34	63.17	42.12	0.31	52.06	37.34	0.30	39.65	32.12	0.30
	62	66.23	53.17	0.30	57.94	48.90	0.29	47.73	44.04	0.28	40.48	40.48	0.26	34.78	34.78	0.37
2000	72	108.45	53.22	0.00	101.80	49.86	0.00	91.24	45.39	0.00	78.98	40.45	0.44	64.63	35.14	0.37
	67	92.47	57.91	0.42	82.85	53.41	0.37	72.12	48.59	0.35	59.46	43.27	0.34	45.44	37.42	0.33
	62	75.32	61.27	0.33	65.55	56.42	0.33	54.43	51.17	0.32	47.10	47.10	0.31	40.65	40.65	0.41

INDOOR COIL AIR		SATURATED TEMPERATURE LEAVING EVAPORATOR (deg F)														
		35			40			45			50			55		
CFM	EWB	TC	SHC	BF	TC	SHC	BF	TC	SHC	BF	TC	SHC	BF	TC	SHC	BF
SIZE4824																
1200	72	82.41	40.38	0.00	75.57	37.03	0.00	67.27	33.28	0.00	57.99	29.38	0.40	47.65	25.31	0.28
	67	68.61	42.46	0.00	60.96	38.66	0.28	52.77	34.87	0.25	43.37	30.72	0.24	33.12	26.38	0.24
	62	55.52	44.06	0.23	48.30	40.17	0.23	39.74	36.06	0.23	32.87	32.87	0.20	27.93	27.93	0.32
1600	72	96.99	47.43	0.00	89.65	43.86	0.00	80.16	39.74	0.00	69.25	35.25	0.42	57.17	30.61	0.33
	67	81.43	50.67	0.39	72.71	46.47	0.33	63.12	42.10	0.31	52.04	37.34	0.29	39.71	32.17	0.29
	62	66.07	53.09	0.29	57.85	48.87	0.28	47.76	44.10	0.28	40.50	40.50	0.26	34.83	34.83	0.36
2000	72	109.82	53.52	0.00	101.38	49.64	0.00	90.95	45.27	0.00	78.86	40.40	0.43	64.63	35.15	0.36
	67	92.12	57.75	0.40	82.58	53.28	0.36	71.96	48.54	0.34	59.43	43.26	0.33	45.47	37.47	0.33
	62	75.09	61.17	0.33	65.84	56.39	0.32	54.30	51.08	0.32	47.15	47.15	0.31	40.74	40.74	0.40

Manufacturer reserves the right to change, at any time, specifications and designs without notice and without obligations.

Table 3 – Cooling Capacities (MBH) – R-454B (Continued)

INDOOR COIL AIR		SATURATED TEMPERATURE LEAVING EVAPORATOR (deg F)														
		35			40			45			50			55		
CFM	EWB	TC	SHC	BF	TC	SHC	BF	TC	SHC	BF	TC	SHC	BF	TC	SHC	BF
SIZE4924																
1200	72	83.25	40.55	0.00	76.32	37.12	0.00	68.07	33.36	0.00	58.59	29.28	0.36	47.56	24.93	0.24
	67	69.15	42.90	0.33	61.57	39.06	0.25	53.06	35.04	0.22	43.42	30.73	0.21	32.88	26.22	0.20
	62	55.65	44.61	0.20	48.39	40.73	0.20	39.52	36.31	0.19	32.28	32.28	0.17	27.26	27.26	0.29
1600	72	97.95	47.46	0.00	90.55	43.85	0.00	80.92	39.61	0.00	69.97	35.05	0.37	57.53	30.16	0.30
	67	81.94	51.07	0.34	73.20	46.77	0.30	63.40	42.30	0.27	52.00	37.33	0.25	39.51	32.08	0.25
	62	66.28	53.88	0.25	57.49	49.40	0.24	47.48	44.51	0.24	39.82	39.82	0.22	34.01	34.01	0.33
2000	72	110.25	53.08	0.00	101.85	49.25	0.00	91.25	44.71	0.00	79.13	39.79	0.39	65.28	34.45	0.34
	67	92.29	57.90	0.36	82.52	53.19	0.33	71.70	48.35	0.31	59.08	43.00	0.29	44.73	36.98	0.29
	62	74.67	61.58	0.29	65.41	56.85	0.29	53.84	51.49	0.28	46.25	46.25	0.28	39.70	39.70	0.37

INDOOR COIL AIR		SATURATED TEMPERATURE LEAVING EVAPORATOR (deg F)														
		35			40			45			50			55		
CFM	EWB	TC	SHC	BF	TC	SHC	BF	TC	SHC	BF	TC	SHC	BF	TC	SHC	BF
SIZE6021																
1500	72	101.92	49.41	0.00	93.76	45.55	0.00	83.84	41.17	0.00	72.57	36.50	0.38	59.94	31.62	0.28
	67	85.02	52.33	0.36	75.94	47.89	0.27	65.87	43.34	0.24	54.33	38.41	0.22	41.68	33.18	0.22
	62	68.91	54.60	0.22	59.95	50.06	0.21	49.76	45.15	0.21	41.44	41.44	0.19	35.55	35.55	0.31
2000	72	119.53	57.76	0.00	110.62	53.73	0.00	99.33	48.97	0.00	86.33	43.73	0.39	71.52	38.11	0.32
	67	100.45	62.33	0.36	90.11	57.43	0.32	78.46	52.28	0.29	64.93	46.66	0.27	49.82	40.45	0.27
	62	81.61	65.67	0.28	71.66	60.72	0.27	59.37	55.07	0.26	50.97	50.97	0.25	44.14	44.14	0.35
2500	72	134.34	64.86	0.00	124.47	60.63	0.00	111.98	55.52	0.00	97.67	49.91	0.41	81.31	43.81	0.36
	67	112.88	70.78	0.38	101.58	65.50	0.35	88.79	60.01	0.33	73.69	53.89	0.31	57.13	47.26	0.31
	62	92.13	75.35	0.32	80.57	69.93	0.30	67.60	64.00	0.30	59.86	59.86	0.30	51.60	51.60	0.39

INDOOR COIL AIR		SATURATED TEMPERATURE LEAVING EVAPORATOR (deg F)														
		35			40			45			50			55		
CFM	EWB	TC	SHC	BF	TC	SHC	BF	TC	SHC	BF	TC	SHC	BF	TC	SHC	BF
SIZE6024																
1500	72	102.60	49.77	0.00	94.22	45.78	0.00	84.03	41.28	0.00	72.70	36.61	0.41	59.91	31.63	0.30
	67	85.35	52.54	0.40	76.23	48.08	0.29	66.03	43.46	0.26	54.35	38.43	0.24	41.57	33.11	0.24
	62	69.20	54.79	0.24	60.40	50.21	0.24	49.85	45.25	0.23	41.58	41.58	0.20	35.56	35.56	0.32
2000	72	120.13	58.06	0.00	111.18	54.01	0.00	99.62	49.09	0.00	86.35	43.74	0.42	71.44	38.10	0.34
	67	100.96	62.59	0.39	90.34	57.52	0.34	78.48	52.26	0.31	64.92	46.63	0.29	49.67	40.37	0.29
	62	81.90	65.81	0.30	71.84	60.76	0.29	59.49	55.12	0.28	50.96	50.96	0.27	44.00	44.00	0.37
2500	72	135.32	65.35	0.00	125.19	60.95	0.00	112.50	55.74	0.00	97.88	49.99	0.43	81.19	43.77	0.38
	67	113.62	71.13	0.40	102.09	65.74	0.37	89.06	60.10	0.35	73.77	53.89	0.33	57.04	47.19	0.32
	62	92.61	75.57	0.33	80.84	70.07	0.32	67.76	64.04	0.32	59.14	59.14	0.32	51.35	51.35	0.41

Table 3 – Cooling Capacities (MBH) – R-454B (Continued)

INDOOR COIL AIR		SATURATED TEMPERATURE LEAVING EVAPORATOR (deg F)														
		35			40			45			50			55		
CFM	EWB	TC	SHC	BF	TC	SHC	BF	TC	SHC	BF	TC	SHC	BF	TC	SHC	BF
SIZE6121																
1500	72	103.06	49.53	0.00	94.76	45.59	0.00	84.80	41.18	0.00	73.38	36.37	0.33	59.90	31.15	0.24
	67	85.67	52.79	0.29	76.67	48.36	0.24	66.36	43.58	0.21	54.42	38.44	0.19	41.40	32.98	0.19
	62	69.16	55.35	0.19	60.01	50.65	0.18	49.63	45.61	0.18	40.90	40.90	0.16	34.84	34.84	0.28
2000	72	120.52	57.59	0.00	111.65	53.60	0.00	100.15	48.68	0.00	87.04	43.36	0.35	71.33	37.42	0.28
	67	100.92	62.70	0.31	90.57	57.74	0.28	78.70	52.44	0.26	64.85	46.63	0.24	49.44	40.29	0.23
	62	81.71	66.56	0.24	71.22	61.44	0.23	58.99	55.63	0.23	50.71	50.71	0.22	43.27	43.27	0.33
2500	72	134.87	64.31	0.00	124.88	60.00	0.00	112.29	54.77	0.00	97.83	49.03	0.37	80.43	42.64	0.32
	67	112.96	70.85	0.34	101.53	65.51	0.32	88.41	59.76	0.30	73.15	53.56	0.28	55.95	46.55	0.27
	62	91.55	75.92	0.28	79.97	70.52	0.27	66.75	64.52	0.26	58.94	58.94	0.27	50.53	50.53	0.37

INDOOR COIL AIR		SATURATED TEMPERATURE LEAVING EVAPORATOR (deg F)														
		35			40			45			50			55		
CFM	EWB	TC	SHC	BF	TC	SHC	BF	TC	SHC	BF	TC	SHC	BF	TC	SHC	BF
SIZE6124																
1500	72	103.06	49.53	0.00	94.76	45.59	0.00	84.80	41.18	0.00	73.38	36.37	0.33	59.90	31.15	0.24
	67	85.67	52.79	0.29	76.67	48.36	0.24	66.36	43.58	0.21	54.42	38.44	0.19	41.40	32.98	0.19
	62	69.16	55.35	0.19	60.01	50.65	0.18	49.63	45.61	0.18	40.90	40.90	0.16	34.84	34.84	0.28
2000	72	120.52	57.59	0.00	111.65	53.60	0.00	100.15	48.68	0.00	87.04	43.36	0.35	71.33	37.42	0.28
	67	100.92	62.70	0.31	90.57	57.74	0.28	78.70	52.44	0.26	64.85	46.63	0.24	49.44	40.29	0.23
	62	81.71	66.56	0.24	71.22	61.44	0.23	58.99	55.63	0.23	50.71	50.71	0.22	43.27	43.27	0.33
2500	72	134.87	64.31	0.00	124.88	60.00	0.00	112.29	54.77	0.00	97.83	49.03	0.37	80.43	42.64	0.32
	67	112.96	70.85	0.34	101.53	65.51	0.32	88.41	59.76	0.30	73.15	53.56	0.28	55.95	46.55	0.27
	62	91.55	75.92	0.28	79.97	70.52	0.27	66.75	64.52	0.26	58.94	58.94	0.27	50.53	50.53	0.37

CFM - Cubic Ft. per Minute **EWB** - Entering Wet Bulb (_F) **LWB** - Leaving Wet Bulb (_F) **TC** - Gross Cooling Capacity 1000 Btuh

SHC - Gross Sensible Capacity 1000 Btuh **BF** - Bypass Factor **MBH** - 1000 Btuh

COOLING CAPACITIES NOTES:

1. Contact manufacturer for cooling capacities at conditions other than shown in table.
2. Formulas:
   Leaving db = entering db - $\frac{\text{sensible heat cap.}}{1.09 \times \text{CFM}}$
   Leaving wb = wb corresponding to enthalpy of air leaving coil (h_{LWB})

   $h_{LWB} = h_{EWB} - \frac{\text{total capacity (Btuh)}}{4.5 \times \text{CFM}}$
   Where h_{EWB} = enthalpy of air entering coil
3. SHC is based on 80°F db temperature of air entering the evaporator coil.
   Below 80°F db, subtract (Correction Factor x CFM) from SHC.
   Above 80°F db, add (Correction Factor x CFM) to SHC.
4. Direct interpolation is permissible. Do not extrapolate.
5. Fan motor heat has not been deducted.
6. All data points are based on approximately 10°F superheat measured at the suction service valve and use of thermostatic expansion valve (TXV) device.

7. Before using maximum cfm shown in table, check coil static pressure drop to ensure system blower can provide necessary static pressure needed for coil and duct systems.
8. Bypass Factor = 0 indicates no psychometric solution. Use bypass factor of next lower EWB for approximation.

BYPASS FACTOR	ENTERING AIR DRY BULB TEMPERATURE (°F)					
	79	78	77	76	75	Under 75
	81	82	83	84	84	Above 85
	Correction Factor					
0.10 0.20 0.30	0.98 0.87 0.76	1.96 1.74 1.53	2.94 2.62 2.29	3.92 3.49 3.05	4.91 4.36 3.82	Use formula shown below

Interpolation is permissible.

Correction Factor = 1.09 x (1 - BF) x (db - 80)

© 2026 Carrier. All rights reserved.

Manufacturer reserves the right to change, at any time, specifications and designs without notice and without obligations.