# FCMB4
# Ion® Communicating Variable–Speed Fan Coil with R-410A Refrigerant
# Sizes 24 thru 60

Comfortmaker® Air Conditioning & Heating

# Product Data

A200369

## PREMIUM ENVIRONMENTALLY RESPONSIBLE FAN COIL

The latest in technology makes the FCM fan coil models the most advanced air handlers available. With attention to quiet, efficient, and comfortable operation, ICP has developed a new benchmark for homeowner comfort and ease of installation.

The FCM utilizes the Ion Control as a required accessory to enable state of the art smart-diagnostics capability. This enables faster troubleshooting, providing ease of service and repair. The FCM also provides a 4-wire hook up with matching outdoor unit and the Ion Control. This makes installation simpler and a lot quicker than with conventional fan coils. The FCM has advanced technology that allows the fan coil to self-configure with a matching outdoor unit and the Ion Control, cutting down on installation time. Always update to the latest software version when installing the FCM fan coil.

The FCM features R-410A refrigerant, the chlorine-free alternate that is the future for the residential heating and cooling industry. The FCM using R-410A refrigerant maximizes performance for environmentally responsible systems. In addition to environmental safety, these systems are 30 to 40% more efficient than standard heating and cooling systems, thereby combining excellence in efficiency and environmental sustainability.

The FCM provides these benefits due to ICP's command of Electronically Commutating Motor (ECM) technology. These motors are extremely efficient at all speeds, and enable the FCM to operate at the correct speed to deliver airflow precisely, ensuring proper performance across a wide range of duct static pressures. This adaptive efficiency also makes installation quality easier to achieve for today's demanding homeowner.

ICP's command of ECM technology may be most evident in the comfort advantages that an ECM can deliver. For true comfort, the homeowner can achieve command of both temperature and humidity in cooling and heating modes.

Another feature which sets the FCM apart is the factory-installed TXV, which enhances efficiency and provides compressor-protecting operation at all recommended conditions. Grooved tubing, louvered aluminum fins, and the large face areas of the FCM refrigerant coils also provide superior efficiency, for high SEER2 and HSPF2 performance.

ICP leads the way in condensate control, a hallmark of these multipoise fan coils. All of these featured components are protected within a rugged, pre-painted metal cabinet lined with super-thick, high-density insulation. For neat, high quality installations, the unit exterior features sweat refrigerant connections for simple leak free performance, and multiple electrical entry for both high and low voltage service.

Assembled at the factory compliant with low leak requirements of less than 2% cabinet leakage rate at 1.0 inches W.C. and 1.4% cabinet leakage rate at 0.5 inches W.C. when tested in accordance with ASHRAE 193 standard..

## FEATURES

### Smart Diagnostics

- Self configuring (ease of installation)
- Easier troubleshooting, providing faster service and repair
- Energy Tracking capability with the Ion Wall Control. (Energy Tracking has the ability to monitor and estimate the energy consumption of your Ion system.)
- Compatibility with wall control depends on software version. Check the installation instructions for minimum requirements.

### Environmentally Responsible Refrigerant Technology

- R-410A refrigerant – the chlorine-free, non-ozone depleting refrigerant
- Thermostatic Expansion Valve (TXV) designed to maximize performance with R-410A refrigerant. Bi-flow hard-shutoff with mechanical fittings

### Energy Efficient Operation

- Electronically Commutated Motor (ECM) operates efficiently at all speeds
- Maximizes efficiency of heating and cooling systems
- Ultra-low power consumption during fan only operation

### Comfort Control

- Warm, comfortable heating air temperatures
- Unmatched humidity control

## Airflow and Sound Technology

- Logarithmic spiral blower housings for high blower efficiency and quiet operation
- Diffuser air discharge section for high airflow efficiency and quiet, smooth operation
- High duct static capability
- Design meets stringent regulations for cabinet air leakage of less than 2% cabinet leakage rate at 1.0 inches W.C. and 1.4% cabinet leakage rate at 0.5 inches W.C. when tested in accordance with ASHRAE 193 standard.

## Condensate Control and Disposal Technology

- Minimal standing water - less microbial growth for improved IAQ and reduced condensate line clogging and related condensate leakage
- Condensate fittings relocated away from turbulent airflow patterns at the blower entrance for improved condensate control performance
- Overflow feature for slope coil units allows condensate to exit the unit without damage to product under clogged primary and secondary line conditions
- Tested for condensate disposal at conditions much more severe than those required by ARI
- Primary and secondary drain connections to comply with HUD
- All pans constructed of an injection molded glass-filled polycarbonate engineered resin material, with brass drain connections
- High density, super thick cabinetry insulation with vapor barrier
- Pre-painted galvanized sheet metal cabinet

## Heat Transfer Technology

- Grooved tubing
- Lanced sine wave aluminum fins
- Discreet refined counterflow refrigerant circuitry
- Bi-flow hard-shutoff TXV metering device with mechanical fittings

## Quality Assisting, Ease of Installation and Service Features

- Easy 4 wire hook up: convenient and reduces installation time.
- Multipoise unit
- Provision made for suspending from roof or ceiling joints
- Modular cabinet on sizes 36 through 60
- Sweat connections for leak free service
- Multiple electrical entry for application flexibility (high and low voltage)
- Low voltage terminal strip, to safely hold connections within the cabinet
- Cabinet construction features innovations designed to prevent cabinet sweating

## Controls and Electrical Features

- Easy plug connection provided for quick installation of accessory heater packages
- 40VA 208/230v transformer
- Replaceable 3-amp blade-type auto fuse protects against transformer secondary short

## Filter Features

- Factory supplied filter
- New standard sized filter rack fits most common size replacement filters

## Warranty

- 10-year No Hassle Replacement limited warranty:
  - 10-year parts limited warranty with timely registration*. Equipment must be registered within 90 days of original installation, except in jurisdictions where warranty benefits cannot be conditioned on registration.

* Applies to original purchaser/homeowner and not available to subsequent owners, except in jurisdictions where laws dictate otherwise.

**(See warranty certificate for complete details and restrictions.)**

**Table 1 – Models Available**

| 2 Ton | 3 Ton | 4 Ton | 5 Ton |
|---|---|---|---|
| FCMB4X24L0BA | FCMB4B36L0CA | FCMB4B48L0CA | FCMB4B60L0DA |

Use of the AHRI Certified TM Mark indicates a manufacturer's participation in the program For verification of certification for individual products, go to www.ahridirectory.org.

ISO 9001
QMI-SAI Global

A230447

## MODEL NUMBER NOMENCLATURE

| 1 | 2 | 3 | 4 | 5 | 6 | 7 | 8 | 9 | 10 | 11 | 12 |
|---|---|---|---|---|---|---|---|---|---|---|---|
| F | C | M | B | 4 | X | 2 | 4 | L | 0 | B | A |

**Product**

F = Fan Coil

**Type**

C = Ion Series, Variable Speed Constant Airflow (VCA) Motor

**Position**

M = Multipoise

**Major Series**

**Refrigerant**

4 = R410A

**Metering Device**

B = Modular (2-piece), TXV

X = Singular (1-piece), TXV

**Capacity**

24 = 24,000

36 = 36,000

48 = 48,000

60 = 60,000

**Coil Type**

L = Aluminum

**Cabinet Width**

B = 17"

C= 21"

D= 24"

**Series Code**

# DIMENSIONS

| UNIT | SERIES | ELECTRICAL CHARACTERSTICS | | | | A | B | C | D | E | F | G | H | J | COIL CONFIGURATION | | SHIPPING WT (LBS) |
|---|---|---|---|---|---|---|---|---|---|---|---|---|---|---|---|---|---|
| | | | | | | | | | | | | | | | SLOPE | "A" | |
| FCMB4X24 | 01 | X | * | | | 42 11/16" | 17 5/8" | 15 3/4" | 15 5/8" | 10 3/4" | 18 9/16" | 18 1/4" | - | - | - | X | 124 |
| FCMB4B36 | 01 | X | * | | | 53 7/16" | 21 1/8" | 19 1/4" | 19 1/8" | 19 3/16" | 26 15/16" | 27 1/2" | 28 5/16" | 19" | X | - | 146 |
| FCMB4B48 | 01 | X | * | | | 53 7/16" | 21 1/8" | 19 1/4" | 19 1/8" | 19 1/2" | 27 1/4" | 26 15/16" | 28 5/16" | - | - | X | 168 |
| FCMB4B60 | 01 | X | * | | | 59 3/16" | 24 11/16" | 22 3/4" | 22 11/16" | 25 1/4" | 32 15/16" | 32 5/8" | 34 1/16" | - | - | X | 203 |
| | | 208/230-1-60 | 208/230-3-60 | | | | | | | | | | | | | | |

X=YES
O=NO
*=YES, DUE TO AVAILABLE FIELD INSTALLED HEATERS.

NOTE:

1. SERIES DESIGNATION IS THE 13TH & 14TH POSITIONS OF UNIT PRODUCT NUMBER.
2. ALL DIMENSIONS ARE IN "INCHES" UNLESS NOTED.

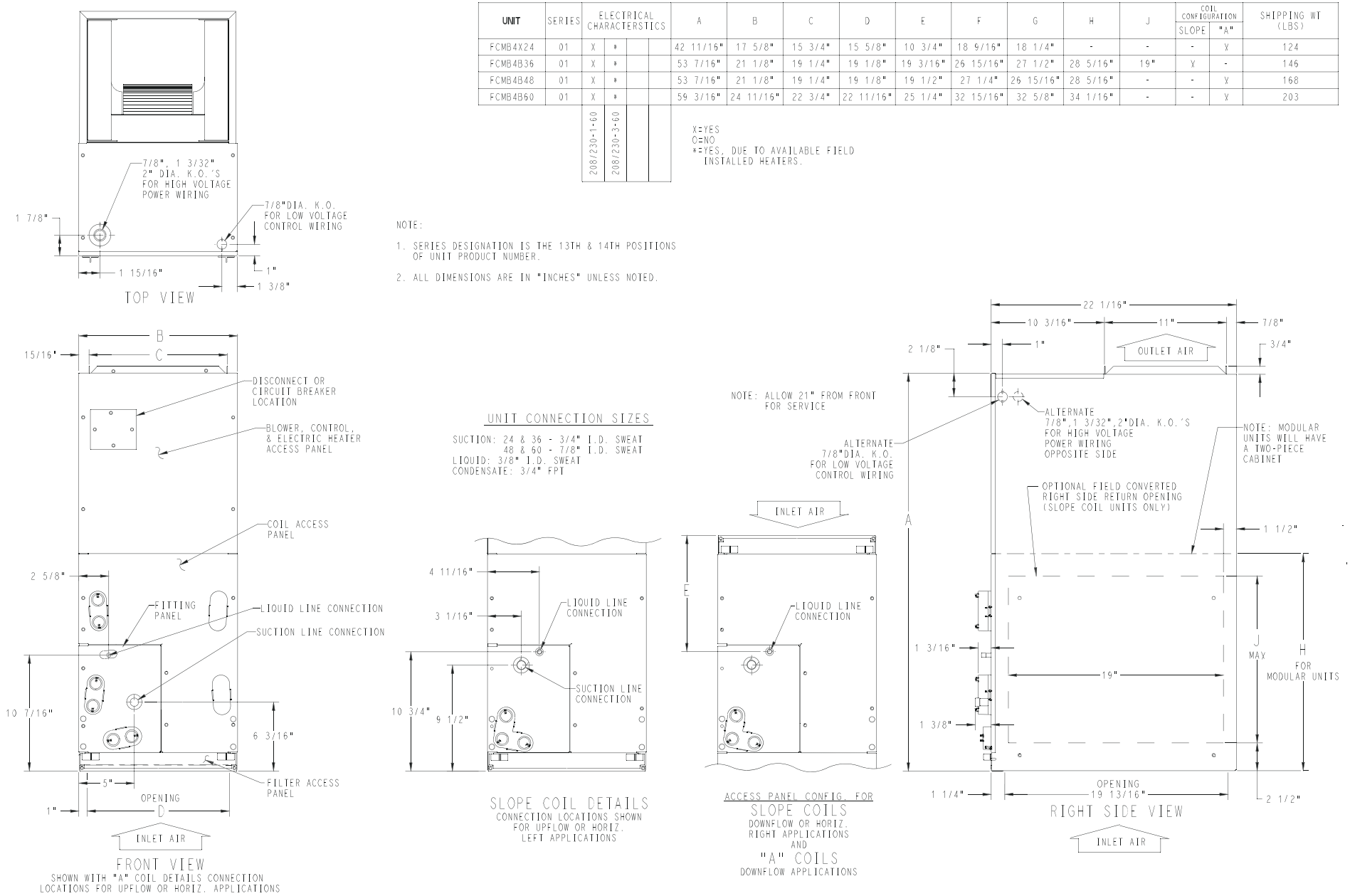


A230464

**Fig. 1 – FCM Dimensional Drawing, sheet 1**

# DIMENSIONS (cont.)

NOTES:

1. CONDENSATE PAN DRAIN CAPS NOT SHOWN FOR CLARITY.
2. ALL DIMENSIONS ARE IN "INCHES" UNLESS NOTED.

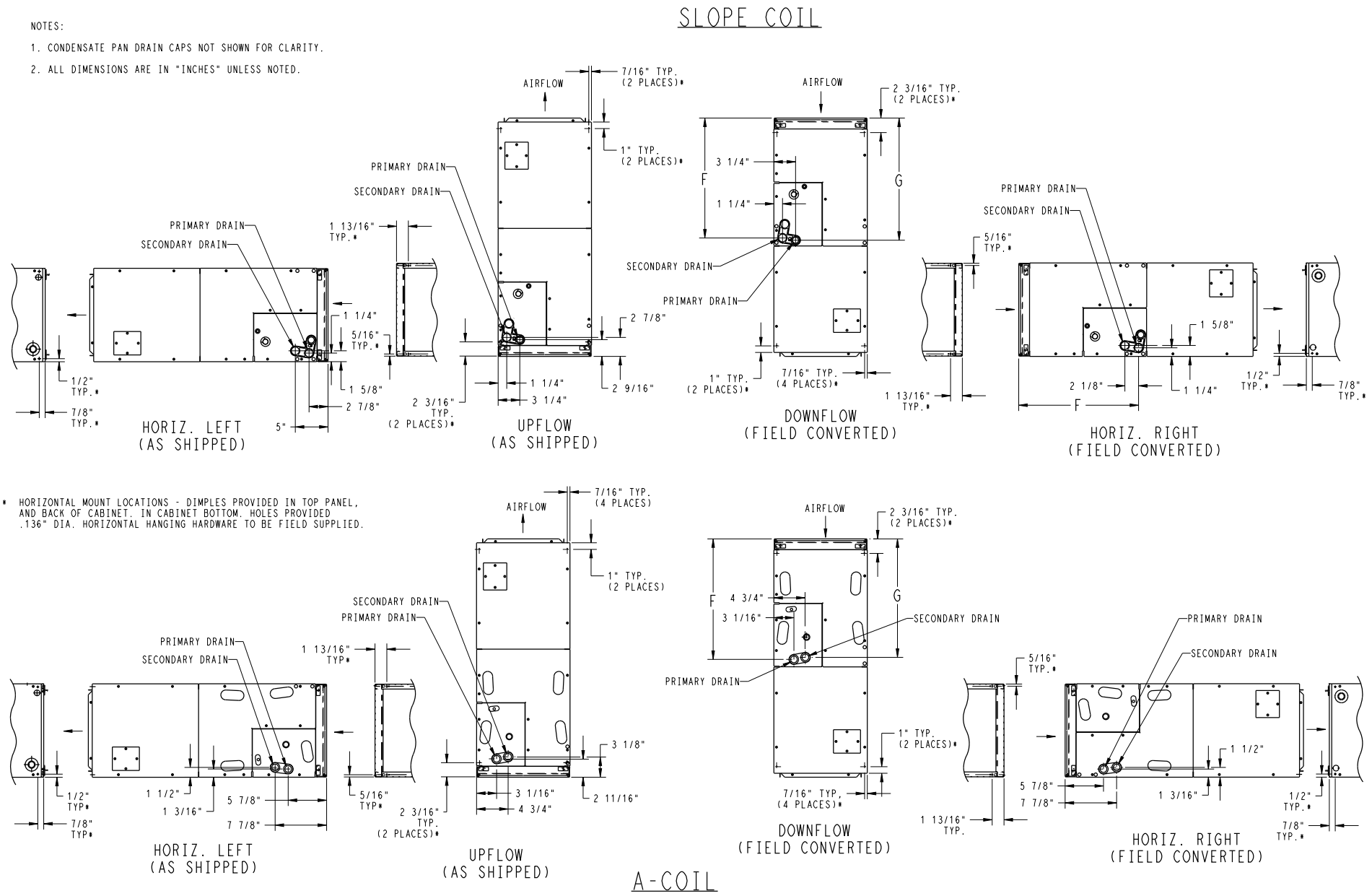


A230465

**Fig. 2 – FCM Dimensional Drawing, sheet 2**

# DIMENSIONS (cont.)

| UNIT | SERIES | ELECTRICAL CHARACTERSTICS | | | | A | B | C | D | E | F | G | H | J | COIL CONFIGURATION | | SHIPPING WT (Kgs) |
|---|---|---|---|---|---|---|---|---|---|---|---|---|---|---|---|---|---|
| | | | | | | | | | | | | | | | SLOPE | "A" | |
| FCMB4X24 | 01 | X | * | | | 1084.3 | 447.7 | 400.0 | 396.9 | 273.0 | 471.5 | 463.6 | - | - | - | X | 56.3 |
| FCMB4B36 | 01 | X | * | | | 1357.3 | 536.6 | 489.0 | 485.8 | 487.4 | 684.2 | 698.5 | 719.1 | 482.6 | X | - | 66.3 |
| FCMB4B48 | 01 | X | * | | | 1357.3 | 536.6 | 489.0 | 485.8 | 495.3 | 692.2 | 684.2 | 719.1 | - | - | X | 76.3 |
| FCMB4B60 | 01 | X | * | | | 1503.4 | 627.1 | 577.8 | 576.3 | 641.4 | 836.6 | 828.7 | 865.2 | - | - | X | 92.2 |
| | | 208/230-1-60 | 208/230-3-60 | | | | | | | | | | | | | | |

X=YES
O=NO
*=YES, DUE TO AVAILABLE FIELD INSTALLED HEATERS.

NOTE:

1. SERIES DESIGNATION IS THE 13TH & 14TH POSITIONS OF UNIT PRODUCT NUMBER.
2. ALL DIMENSIONS ARE IN "MM" UNLESS NOTED.

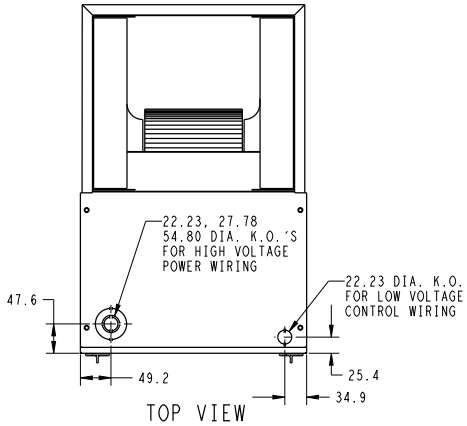


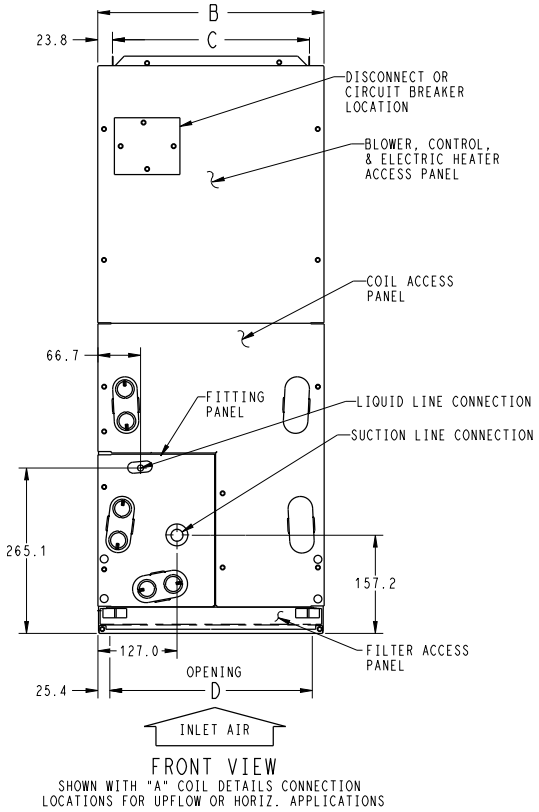


UNIT CONNECTION SIZES

SUCTION: 24 & 36 - 19.05 I.D. SWEAT
48 & 60 - 22.23 I.D. SWEAT
LIQUID: 9.53 I.D. SWEAT
CONDENSATE: 19.0 FPT

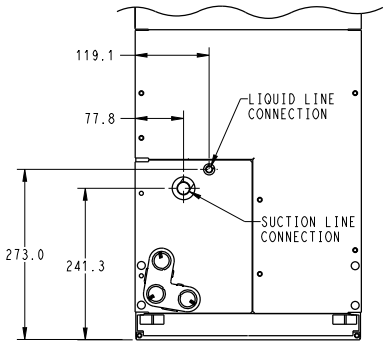


SLOPE COIL DETAILS
CONNECTION LOCATIONS SHOWN
FOR UPFLOW OR HORIZ.
LEFT APPLICATIONS

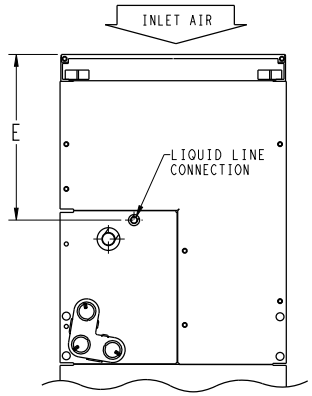


ACCESS PANEL CONFIG. FOR
SLOPE COILS
DOWNFLOW OR HORIZ.
RIGHT APPLICATIONS
AND
"A" COILS
DOWNFLOW APPLICATIONS

NOTE: ALLOW 533.4 FROM FRONT FOR SERVICE

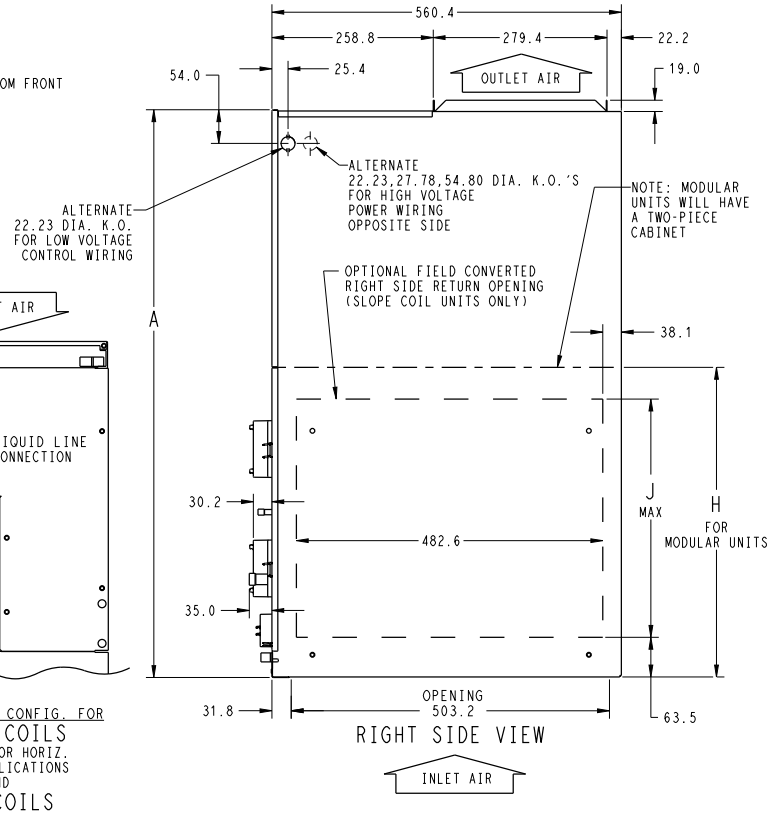


A230466

**Fig. 3 – FCM Dimensional Drawing (metric) sheet 3**

# DIMENSIONS (cont.)

NOTES:

1. CONDENSATE PAN DRAIN CAPS NOT SHOWN FOR CLARITY.
2. ALL DIMENSIONS ARE IN "MM" UNLESS NOTED.

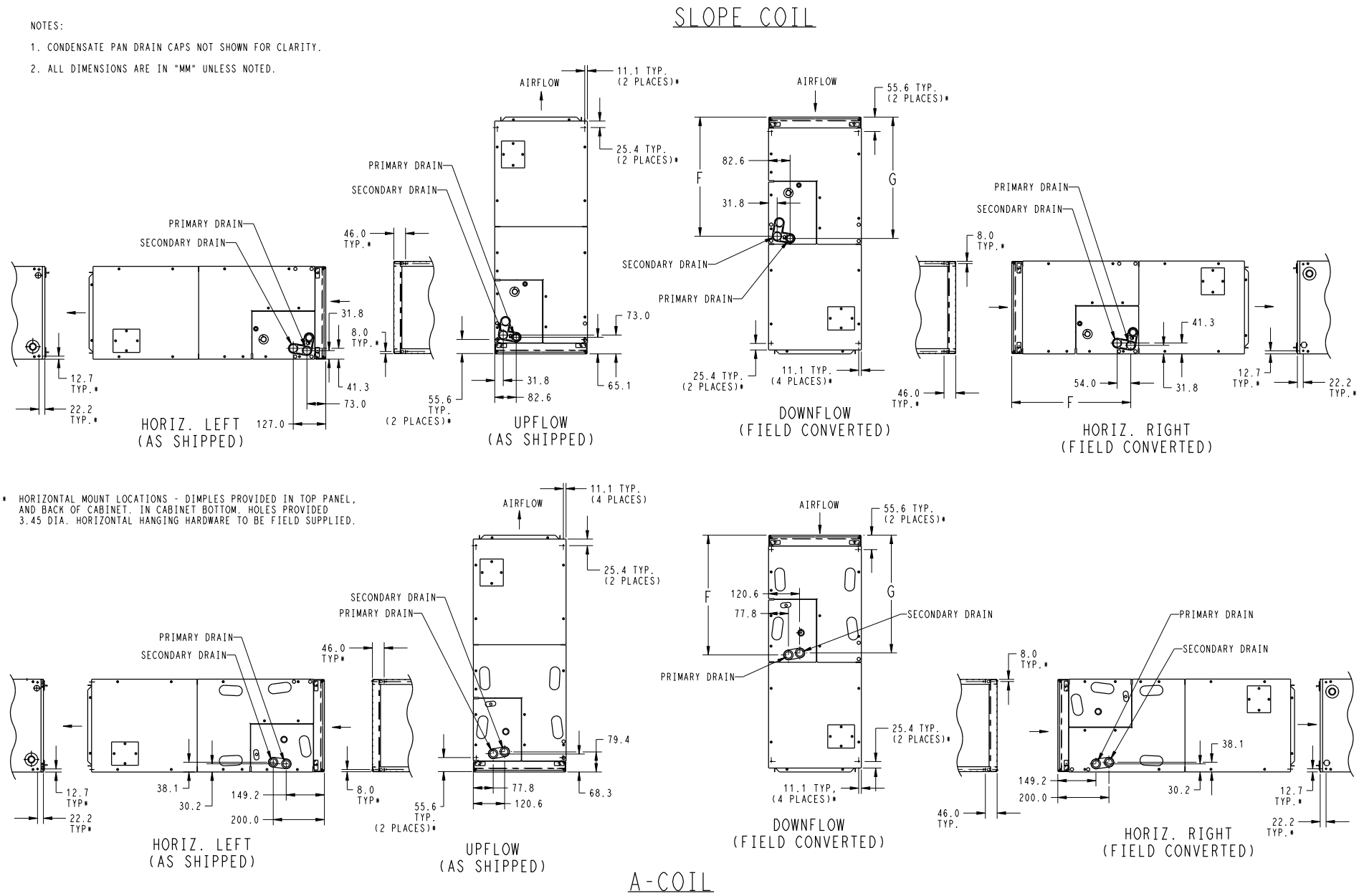


**Fig. 4 – FCM Dimensional Drawing (metric) sheet 4**

**Table 2 – Physical Data**

| MODEL | FIELD-INSTALLED HEAT (kW) | NOMINAL COOLING CAPACITY (BTUH) | DIMENSIONS (In/mm) | | | SHIPPING WEIGHT (LBS / KG) |
|---|---|---|---|---|---|---|
| | | | HEIGHT | WIDTH | DEPTH | |
| **FCMB4X24L0BA** | 5, 8, 9, 10, 15, 20 | 18,000 to 36,000 | 42-11/16 in 1084.3 mm | 17-5/8 in 447.7 mm | 22-1/16 in 560.4 mm | 124 lbs / 56.3 kg |
| **FCMB4B36L0CA** | 5, 8, 9, 10, 15, 18, 20 | 24,000 to 42,000 | 53-7/16 in 1357.3 mm | 21-1/8 in 536.6 mm | 22-1/16 in 560.4 mm | 146 lbs / 66.3 kg |
| **FCMB4B48L0CA** | 5, 8, 9, 10, 15, 18, 20, 24, 30 | 30,000 to 48,000 | 53-7/16 in 1357.3 mm | 21-1/8 in 536.6 mm | 22-1/16 in 560.4 mm | 168 lbs / 76.3 kg |
| **FCMB4B60L0DA** | 8, 9, 10, 15, 18, 20, 24, 30 | 36,000 to 60,000 | 59-3/16 in 1503.4 mm | 24-11/16 in 627.1 mm | 22-1/16 in 560.4 mm | 203 lbs / 92.2 kg |

**Table 3 – Specifications**

| **Size** | 24 | 36 | 48 | 60 |
|---|---|---|---|---|
| **COIL** | | | | |
| **Refrigerant Metering Device** | Refrigerant (R-410A) | | | |
| **TXV Size** | 2 Ton | 3 Ton | 4 Ton | 5 Ton |
| **Rows/Fins Per In.** | 3/14.5 | | | |
| **Face Area (Sq. Ft.)** | 3.46 | | 5.93 | 7.42 |
| **Configuration** | A | Slope | A | |
| **BLOWER AND MOTOR** | | | | |
| **Air Discharge** | Upflow, Downflow, Horizontal | | | |
| **CFM (Nominal Cooling/Heating)** | 525 | 700 | 875 | 1050 |
| | 700 | 875 | 1050 | 1225 |
| | 875 | 1050 | 1225 | 1400 |
| | 1050 | 1225 | 1400 | 1750 |
| **Motor HP (ECM)** | 1/2 | | 3/4 | |
| **FILTER SIZE (W x L), in (mm)** | 16 x 20 (406.4 x 508) | 20 x 20 (508 x 508) | | 23 x 20 (584.2 x 508) |
| | | | | |
| **CABINET CONFIGURATION OPTIONS** | 1 Piece | Modular | | |

# PERFORMANCE DATA

## AIRFLOW DELIVERY — COOLING, HEATING, ELECTRIC HEATING MODES

These fan coils will provide airflow at a rate that is requested by the Integrated System User Interface during air conditioning or heat pump heating (without electric heat) modes. The nominal airflow for both heating and cooling modes is 350 cfm/ton nominal size of the outdoor unit installed. The airflow actually requested by the User Interface is modified by its internal algorithms for zoning, comfort or efficiency concerns. Refer to the documentation for the User Interface for more information on how the User Interface controls the fan coil. Safe operation of electric heaters requires airflow delivery at or above the minimum CFM for electric heater application listed in the chart below. The fan coil will adjust its airflow delivery to maintain safe airflow as operating mode and staging conditions require. See Table 4.

**Table 4 – Airflow Delivery (CFM) — Electric Heating Modes**

| FAN UNIT SIZE | OUTDOOR UNIT CAPACITY BTUH | ELECTRIC HEATER kW RANGE | | | | | | | | | | | |
|---|---|---|---|---|---|---|---|---|---|---|---|---|---|
| | | 0-5 | | | 0-10 | | | 0-15 | | | 0-20 | | |
| | | Lo | Nom | High | Lo | Nom | High | Lo | Nom | High | Lo | Nom | High |
| 24 | 18,000 | 700 | 700 | 805 | 750 | 750 | 863 | — | — | — | — | — | — |
| | 24,000 | 700 | 700 | 805 | 750 | 750 | 863 | 1050 | 1050 | 1208 | — | — | — |
| | 30,000 | 875 | 875 | 1006 | 875 | 875 | 1006 | 1050 | 1050 | 1208 | 1200 | 1200 | 1380 |
| | 36,000 | 1050 | 1050 | 1208 | 1050 | 1050 | 1208 | 1050 | 1050 | 1208 | 1200 | 1200 | 1380 |
| 36 | 24,000 | 700 | 700 | 805 | 750 | 750 | 863 | 1050 | 1050 | 1208 | 1225 | — | — |
| | 30,000 | 875 | 875 | 1006 | 875 | 875 | 1006 | 1050 | 1050 | 1208 | 1225 | — | — |
| | 36,000 | 1050 | 1050 | 1208 | 1050 | 1050 | 1208 | 1050 | 1050 | 1208 | 1225 | 1225 | 1409 |
| | 42,000 | 1225 | 1225 | 1409 | 1225 | 1225 | 1409 | 1225 | 1225 | 1409 | 1225 | 1225 | 1409 |
| FAN UNIT SIZE | OUTDOOR UNIT CAPACITY BTUH | ELECTRIC HEATER kW RANGE | | | | | | | | | | | |
| | | 0-10 | | | 0-15 | | | 0-20 | | | 0-30 | | |
| | | Lo | Nom | High | Lo | Nom | High | Lo | Nom | High | Lo | Nom | High |
| 48 | 30,000 | 1000 | 1000 | 1150 | 1200 | 1200 | 1380 | — | — | — | — | — | — |
| | 36,000 | 1100 | 1100 | 1265 | 1200 | 1200 | 1380 | 1300 | 1300 | 1495 | — | — | — |
| | 42,000 | 1225 | 1225 | 1409 | 1225 | 1225 | 1409 | 1350 | 1350 | 1553 | — | — | — |
| | 48,000 | 1400 | 1400 | 1610 | 1400 | 1400 | 1610 | 1400 | 1400 | 1610 | 1500 | 1500 | 1725 |
| 60 | 36,000 | 1200 | 1200 | 1380 | 1250 | 1250 | 1438 | 1350 | 1350 | 1553 | — | — | — |
| | 42,000 | 1225 | 1225 | 1409 | 1300 | 1300 | 1495 | 1350 | 1350 | 1553 | — | — | — |
| | 48,000 | 1400 | 1400 | 1610 | 1400 | 1400 | 1610 | 1400 | 1400 | 1610 | 1750 | 1750 | 2013 |
| | 60,000 | 1750 | 1750 | 2013 | 1750 | 1750 | 2013 | 1750 | 1750 | 2013 | 1750 | 1750 | 2013 |

NOTE: Lo, Nom, and Hi refer to AC, HP, CFM ADJUST Section
" — " Airlow not recommended for heater/system size.

**Table 5 – Minimum CFM for Electric Heater Application***

| FAN COIL UNIT SIZE (TON) | HEAT PUMP UNIT SIZE (TON) | CFM | | | | |
|---|---|---|---|---|---|---|
| | | HEATER SIZE kW | | | | |
| | | 5 | 8, 9, 10 | 12, 15 | 18, 20 | 24, 30 |
| 24 (2) | Emergency | 700 | 750 | 1050 | 1200 | |
| | 18 (1½) | 700 | 750 | 1050 | 1200 | — |
| | 24 (2) | 700 | 750 | 1050 | 1200 | — |
| | 30 (2½) | 875 | 875 | 1050 | 1200 | — |
| | 36 (3) | 1050 | 1050 | 1050 | 1200 | — |
| 36 (3) | Emergency | 700 | 750 | 1050 | 1225 | |
| | 24 (2) | 700 | 750 | 1050 | 1225 | — |
| | 30 (2½) | 875 | 875 | 1050 | 1225 | — |
| | 36 (3) | 1050 | 1050 | 1050 | 1225 | — |
| | 42 (3½) | 1225 | 1225 | 1225 | 1225 | — |
| 48 (4) | Emergency | 1000 | 1000 | 1200 | 1300 | 1450 |
| | 30 (2½) | 1000 | 1000 | 1200 | 1300 | 1450 |
| | 36 (3) | 1100 | 1100 | 1200 | 1300 | 1450 |
| | 42 (3½) | 1225 | 1225 | 1225 | 1350 | 1450 |
| | 48 (4) | 1400 | 1400 | 1400 | 1400 | 1450 |
| 60 (5) | Emergency | 1200 | 1200 | 1300 | 1350 | 1750 |
| | 36 (3) | 1200 | 1200 | 1250 | 1350 | 1750 |
| | 42 (3½) | 1225 | 1225 | 1300 | 1350 | 1750 |
| | 48 (4) | 1400 | 1400 | 1400 | 1400 | 1750 |
| | 60 (5) | 1750 | 1750 | 1750 | 1750 | 1750 |

*. These airflows are minimum acceptable airflows as UL listed. Actual airflow delivered will be per airflow delivery chart for Electric Heating Modes.

## ACCEPTABLE DUCT CONDITIONS

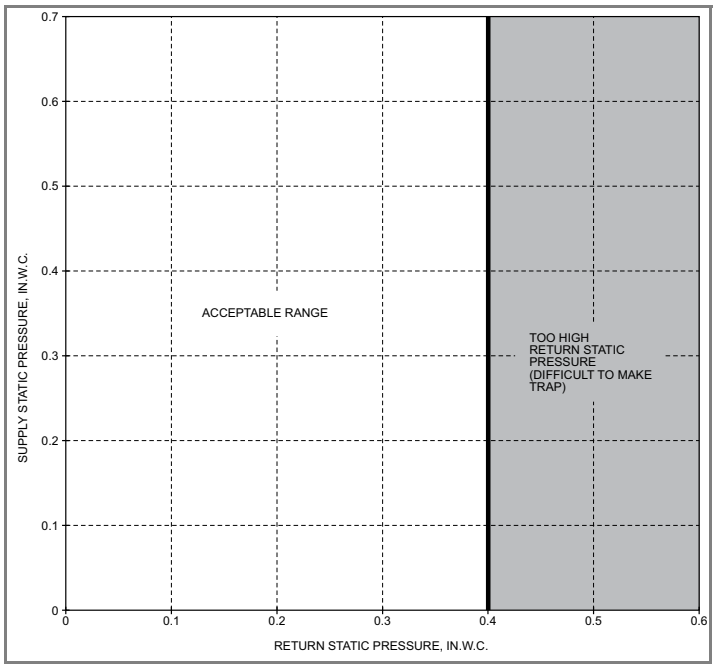


A02296

## Acceptable Duct Conditions

For satisfactory operation (specifically making dry secondary trap), subject fan coils must be installed with duct systems which fall within the "Acceptable Range" illustrated above.

The airflow performance charts for the fan coil depict nominal airflow delivery for heating and cooling mode operation versus duct system static pressure drop. Cooling mode operation is shown as solid vertical lines for all 4 system size selections. Heating mode operation for the 4 system size selections are shown as dashed vertical lines.

The dotted curved lines are static pressure drop characteristics for several fixed-duct systems. These lines can be used to predict the system static pressure drop at any airflow given the actual drop at 1 known point.

For example, a duct system is designed for 0.15 in. water column (in. w.c.) drop at 1200 CFM. The FE4B 5-ton operating at nominal cooling airflow would deliver 1050 CFM with a duct system drop of 0.11 in. w.c.. (See point 1 in the Airflow Performance/Static Pressure figure below.) On the same duct system, the FE4B 5-ton operating at nominal heating airflow would deliver 945 CFM with a duct system drop of 0.09 in. w.c. (See point 2.)

This example is but one of many possible duct system designs. The FE4B 5-ton will deliver the above airflows against much higher static pressures.

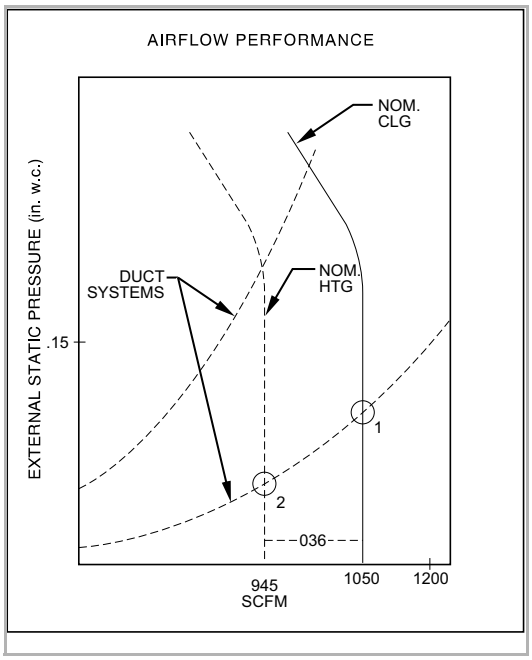


A09339

# PERFORMANCE DATA (cont)

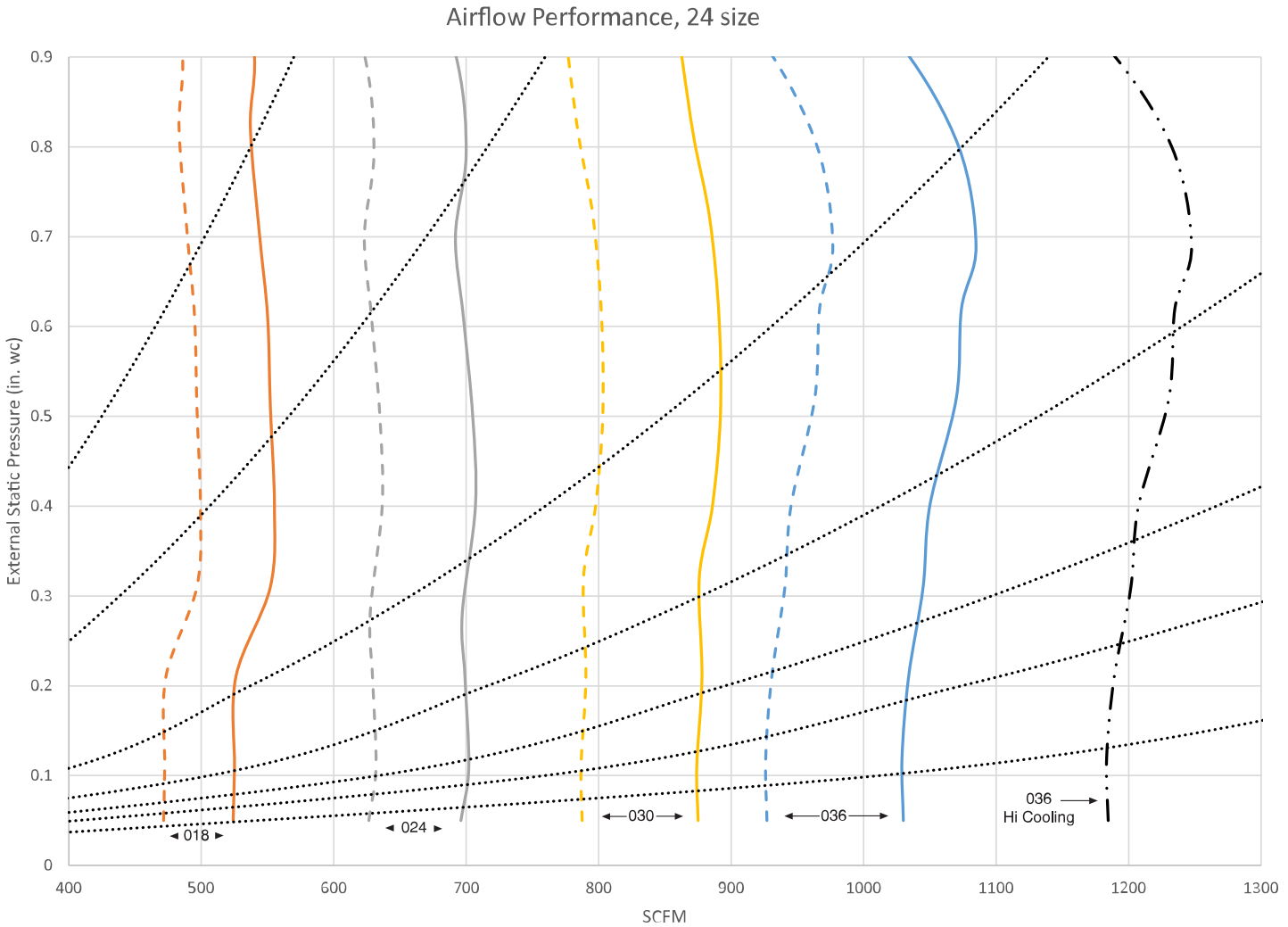


A230434

## 2 Ton

——— Nominal Cooling and Heat Pump Efficiency airflow for each size selection. Airflow can be adjusted +15% to -10%.
---- Nominal Heat Pump Comfort airflow for each size selection. Airflow can be adjusted +15% to -10%.
· - · - Maximum cooling airflow for largest size selection. Adjusted +15% from nominal.
· · · · · · Fixed Duct Systems (See description under Acceptable Duct Conditions.)

## PERFORMANCE DATA (cont)

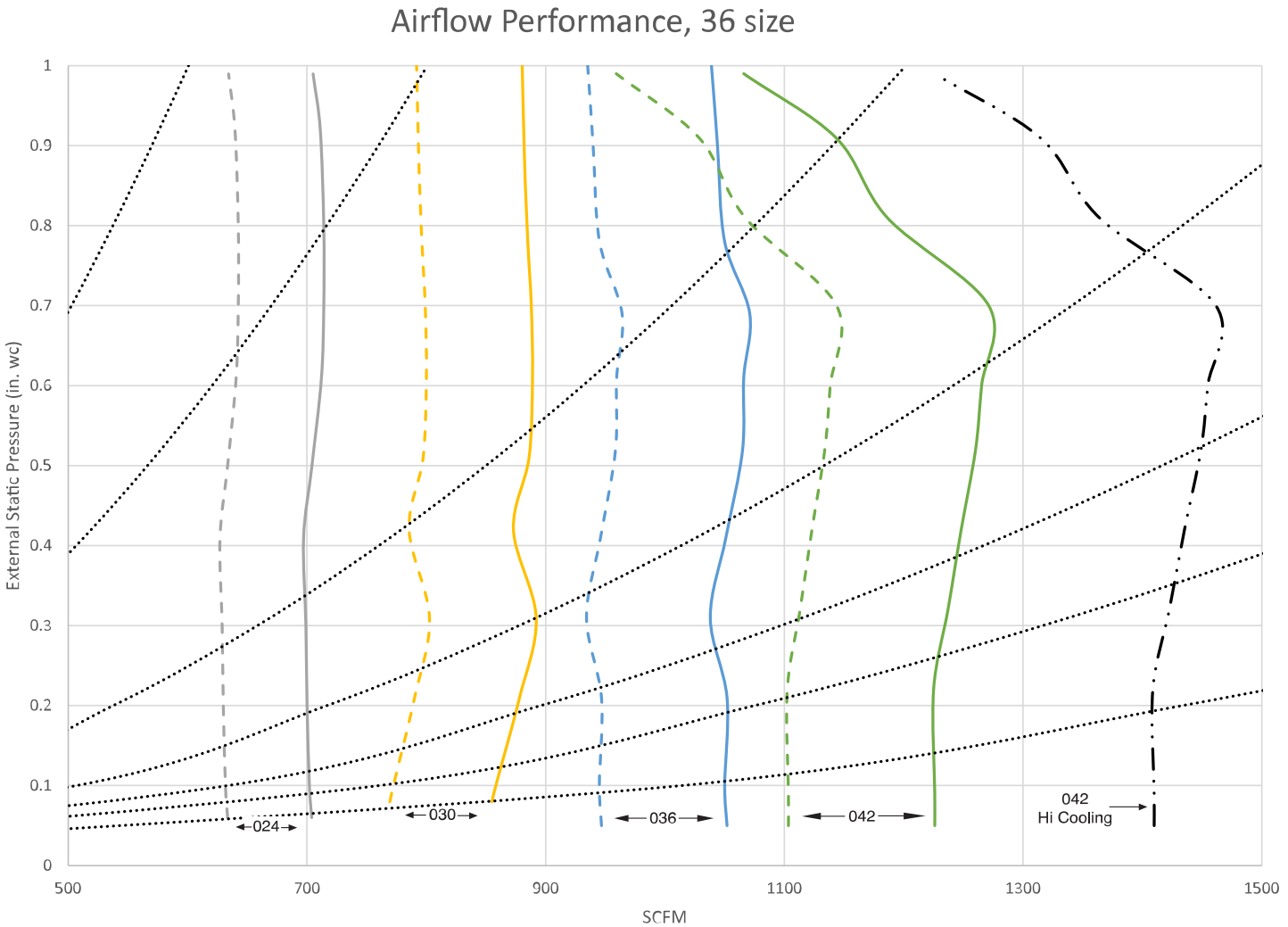


A230435

## 3 Ton

——— Nominal Cooling and Heat Pump Efficiency airflow for each size selection. Airflow can be adjusted +15% to -10%.
---- Nominal Heat Pump Comfort airflow for each size selection. Airflow can be adjusted +15% to -10%.
· - · - Maximum cooling airflow for largest size selection. Adjusted +15% from nominal.
· · · · · · Fixed Duct Systems (See description under Acceptable Duct Conditions.)

# PERFORMANCE DATA (cont)

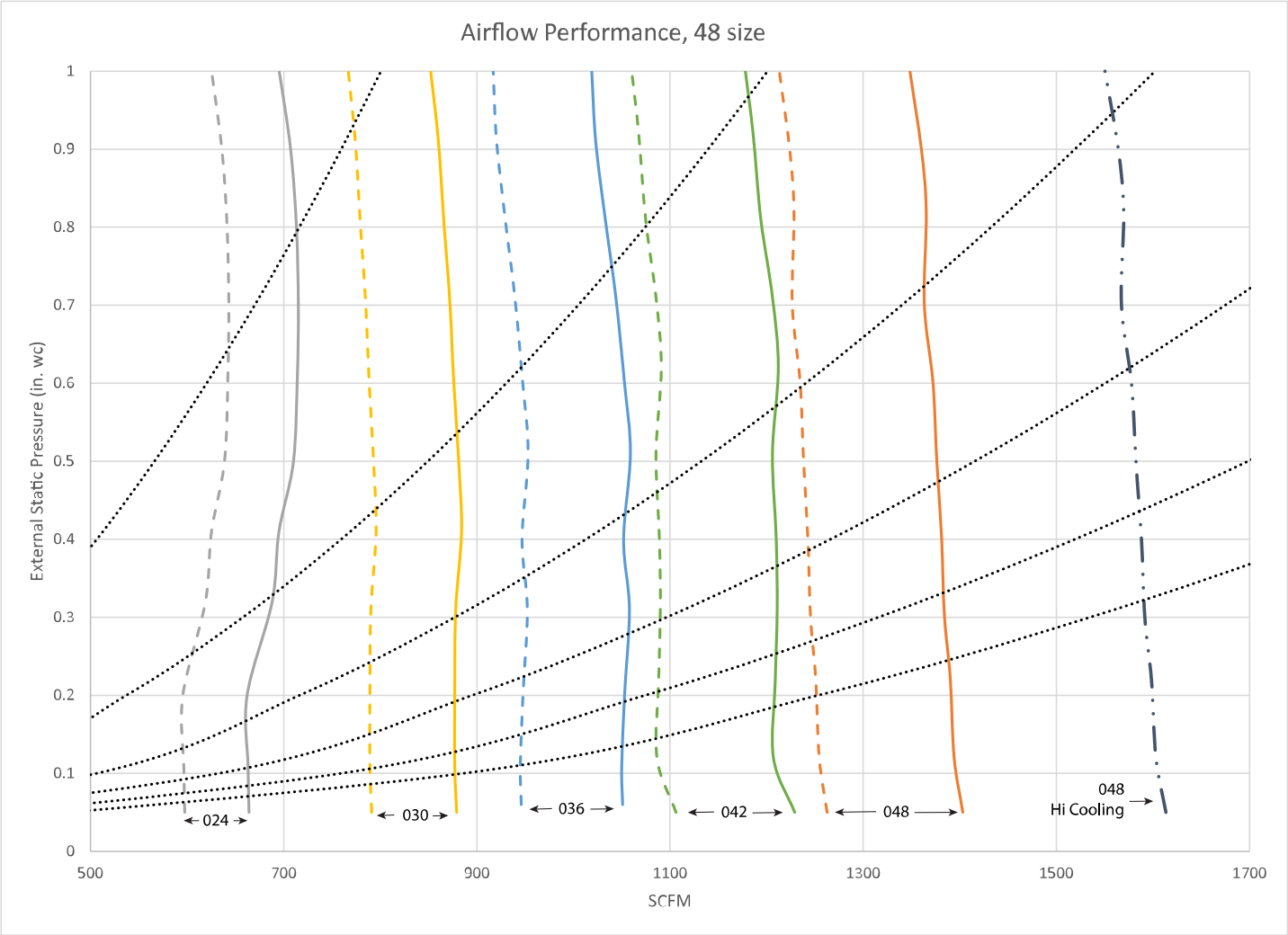


A230436

## 4 Ton

——— Nominal Cooling and Heat Pump Efficiency airflow for each size selection. Airflow can be adjusted +15% to -10%.
---- Nominal Heat Pump Comfort airflow for each size selection. Airflow can be adjusted +15% to -10%.
· - · - Maximum cooling airflow for largest size selection. Adjusted +15% from nominal.
· · · · · · Fixed Duct Systems (See description under Acceptable Duct Conditions.)

# PERFORMANCE DATA (cont)

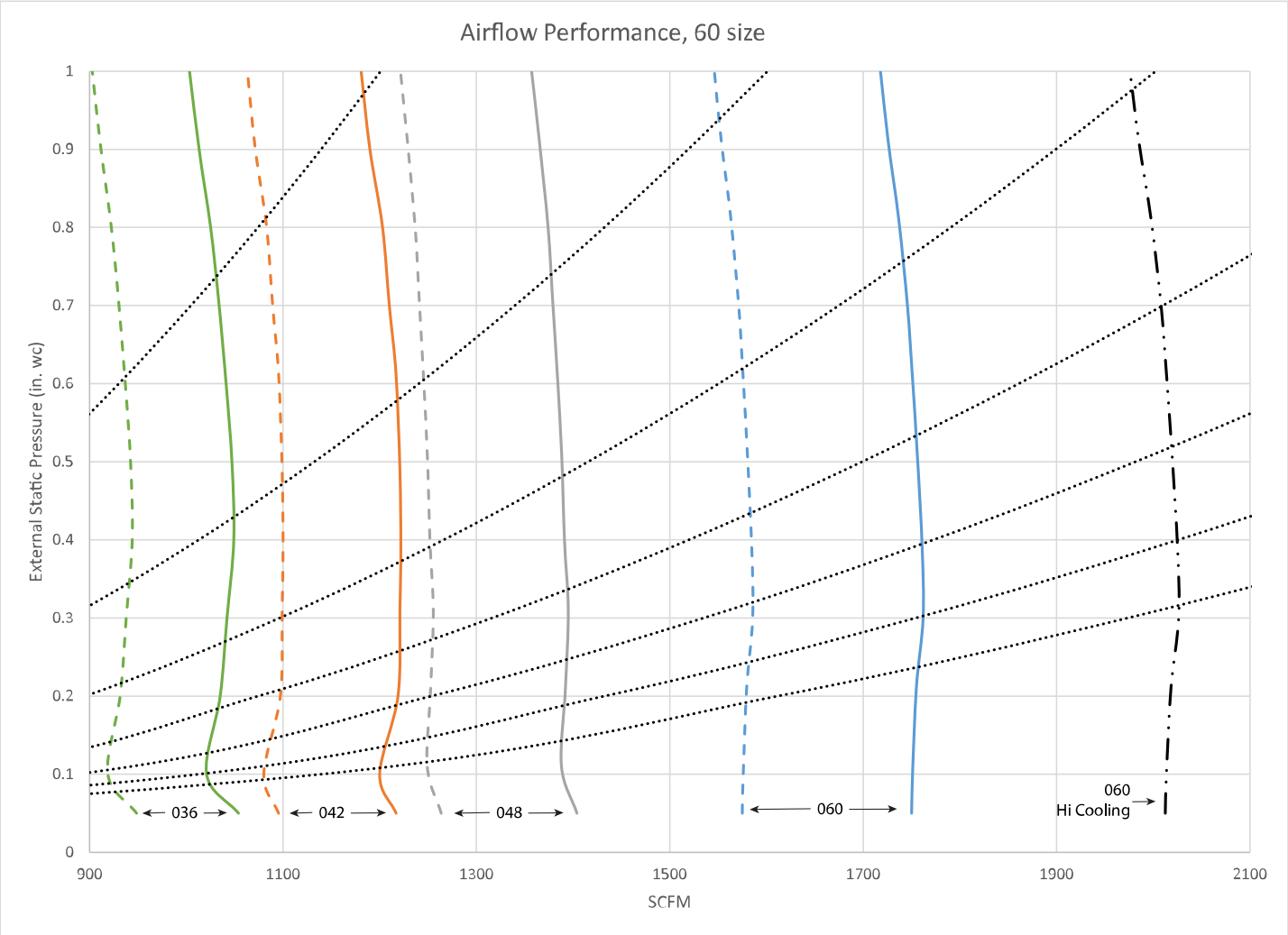


A230437

## 5 Ton

——— Nominal Cooling and Heat Pump Efficiency airflow for each size selection. Airflow can be adjusted +15% to -10%.
---- Nominal Heat Pump Comfort airflow for each size selection. Airflow can be adjusted +15% to -10%.
· - · - Maximum cooling airflow for largest size selection. Adjusted +15% from nominal.
· · · · · · Fixed Duct Systems (See description under Acceptable Duct Conditions.)

**Table 6 – Cooling Capacities (MBtuh)**

| INDOOR COIL AIR | | SATURATED TEMPERATURE LEAVING EVAPORATOR (deg F) | | | | | | | | | | | | | | |
|---|---|---|---|---|---|---|---|---|---|---|---|---|---|---|---|---|
| | | 35 | | | 40 | | | 45 | | | 50 | | | 55 | | |
| CFM | EWB | TC | SHC | BF | TC | SHC | BF | TC | SHC | BF | TC | SHC | BF | TC | SHC | BF |
| **SIZE 24** | | | | | | | | | | | | | | | | |
| 525 | 72 | 37.50 | 19.04 | 0.00 | 33.96 | 17.17 | 0.00 | 29.95 | 15.18 | 0.00 | 25.35 | 13.07 | 0.00 | 20.11 | 10.83 | 0.00 |
| | 67 | 30.71 | 19.50 | 0.00 | 27.01 | 17.49 | 0.00 | 22.82 | 15.38 | 0.00 | 18.08 | 13.17 | 0.00 | 12.92 | 10.93 | 0.00 |
| | 62 | 24.45 | 19.79 | 0.00 | 20.62 | 17.68 | 0.00 | 16.51 | 15.56 | 0.01 | 12.74 | 12.74 | 0.05 | 10.53 | 10.53 | 0.21 |
| 700 | 72 | 46.28 | 23.46 | 0.00 | 42.01 | 21.31 | 0.00 | 37.11 | 18.99 | 0.00 | 31.54 | 16.50 | 0.00 | 25.10 | 13.80 | 0.01 |
| | 67 | 38.08 | 24.46 | 0.01 | 33.62 | 22.14 | 0.01 | 28.52 | 19.62 | 0.01 | 22.62 | 16.92 | 0.01 | 16.16 | 14.14 | 0.01 |
| | 62 | 30.57 | 25.26 | 0.01 | 25.94 | 22.75 | 0.01 | 20.81 | 20.13 | 0.02 | 16.58 | 16.58 | 0.08 | 13.73 | 13.73 | 0.23 |
| 875 | 72 | 53.42 | 27.14 | 0.00 | 48.58 | 24.80 | 0.00 | 42.99 | 22.24 | 0.00 | 36.57 | 19.46 | 0.00 | 29.26 | 16.44 | 0.01 |
| | 67 | 44.14 | 28.75 | 0.02 | 39.07 | 26.18 | 0.02 | 33.23 | 23.40 | 0.01 | 26.53 | 20.34 | 0.02 | 19.00 | 17.14 | 0.02 |
| | 62 | 35.64 | 30.11 | 0.02 | 30.44 | 27.37 | 0.02 | 24.72 | 24.45 | 0.03 | 20.16 | 20.16 | 0.11 | 16.72 | 16.72 | 0.26 |
| 1050 | 72 | 59.25 | 30.25 | 0.00 | 54.00 | 27.79 | 0.01 | 47.91 | 25.05 | 0.02 | 40.85 | 22.05 | 0.02 | 32.69 | 18.77 | 0.02 |
| | 67 | 49.16 | 32.52 | 0.02 | 43.60 | 29.78 | 0.03 | 37.18 | 26.76 | 0.03 | 29.81 | 23.50 | 0.03 | 21.58 | 19.97 | 0.04 |
| | 62 | 39.88 | 34.49 | 0.03 | 34.24 | 31.56 | 0.03 | 28.13 | 28.41 | 0.04 | 23.44 | 23.44 | 0.14 | 19.43 | 19.43 | 0.28 |
| 1225 | 72 | 64.10 | 32.93 | 0.02 | 58.53 | 30.39 | 0.02 | 52.02 | 27.54 | 0.03 | 44.44 | 24.38 | 0.03 | 35.61 | 20.89 | 0.03 |
| | 67 | 53.37 | 35.88 | 0.04 | 47.43 | 33.02 | 0.04 | 40.52 | 29.84 | 0.04 | 32.58 | 26.37 | 0.04 | 23.87 | 22.63 | 0.05 |
| | 62 | 43.50 | 38.51 | 0.04 | 37.52 | 35.42 | 0.04 | 31.22 | 32.09 | 0.06 | 26.46 | 26.46 | 0.17 | 21.98 | 21.98 | 0.31 |
| **SIZE 36** | | | | | | | | | | | | | | | | |
| 700 | 72 | 46.73 | 23.71 | 0.00 | 42.21 | 21.42 | 0.00 | 37.03 | 18.95 | 0.00 | 31.12 | 16.32 | 0.00 | 24.47 | 13.58 | 0.00 |
| | 67 | 38.23 | 24.55 | 0.01 | 33.46 | 22.07 | 0.00 | 28.13 | 19.46 | 0.00 | 22.20 | 16.73 | 0.01 | 15.77 | 13.96 | 0.01 |
| | 62 | 30.47 | 25.19 | 0.01 | 25.73 | 22.64 | 0.01 | 20.64 | 20.02 | 0.02 | 16.45 | 16.45 | 0.08 | 13.57 | 13.57 | 0.24 |
| 875 | 72 | 54.14 | 27.50 | 0.00 | 49.01 | 25.01 | 0.00 | 43.08 | 22.29 | 0.00 | 36.32 | 19.31 | 0.01 | 28.48 | 16.14 | 0.01 |
| | 67 | 44.54 | 28.96 | 0.01 | 39.13 | 26.21 | 0.02 | 32.90 | 23.21 | 0.02 | 25.90 | 20.10 | 0.01 | 18.55 | 16.94 | 0.02 |
| | 62 | 35.68 | 30.12 | 0.02 | 30.20 | 27.22 | 0.02 | 24.46 | 24.28 | 0.03 | 20.00 | 20.00 | 0.11 | 16.52 | 16.52 | 0.26 |
| 1050 | 72 | 60.23 | 30.73 | 0.00 | 54.65 | 28.07 | 0.02 | 48.16 | 25.17 | 0.01 | 40.65 | 21.97 | 0.02 | 31.96 | 18.47 | 0.02 |
| | 67 | 49.80 | 32.84 | 0.02 | 43.85 | 29.89 | 0.03 | 36.97 | 26.66 | 0.03 | 29.12 | 23.18 | 0.03 | 21.00 | 19.69 | 0.04 |
| | 62 | 40.12 | 34.60 | 0.03 | 34.09 | 31.45 | 0.03 | 27.83 | 28.19 | 0.04 | 23.19 | 23.19 | 0.14 | 19.17 | 19.17 | 0.29 |
| 1225 | 72 | 65.33 | 33.52 | 0.01 | 59.35 | 30.77 | 0.02 | 52.41 | 27.71 | 0.03 | 44.36 | 24.34 | 0.03 | 34.94 | 20.62 | 0.03 |
| | 67 | 54.19 | 36.28 | 0.04 | 47.86 | 33.21 | 0.04 | 40.43 | 29.78 | 0.04 | 31.95 | 26.07 | 0.04 | 23.18 | 22.28 | 0.05 |
| | 62 | 43.93 | 38.70 | 0.04 | 37.54 | 35.38 | 0.04 | 30.91 | 31.83 | 0.06 | 26.14 | 26.14 | 0.17 | 21.63 | 21.63 | 0.31 |
| 1400 | 72 | 69.64 | 35.98 | 0.03 | 63.37 | 33.15 | 0.04 | 56.04 | 29.99 | 0.04 | 47.51 | 26.47 | 0.04 | 37.51 | 22.57 | 0.04 |
| | 67 | 57.94 | 39.40 | 0.05 | 51.25 | 36.22 | 0.05 | 43.43 | 32.67 | 0.05 | 34.46 | 28.78 | 0.05 | 25.18 | 24.72 | 0.07 |
| | 62 | 47.26 | 42.51 | 0.05 | 40.58 | 39.04 | 0.06 | 33.84 | 35.26 | 0.08 | 28.85 | 28.85 | 0.20 | 23.92 | 23.91 | 0.34 |
| **SIZE 48** | | | | | | | | | | | | | | | | |
| 875 | 72 | 55.50 | 29.11 | 0.00 | 50.59 | 26.54 | 0.00 | 44.88 | 23.71 | 0.00 | 38.24 | 20.63 | 0.00 | 30.68 | 17.36 | 0.00 |
| | 67 | 45.72 | 30.33 | 0.00 | 40.45 | 27.50 | 0.00 | 34.52 | 24.46 | 0.00 | 27.67 | 21.20 | 0.00 | 19.98 | 17.78 | 0.00 |
| | 62 | 36.75 | 31.31 | 0.00 | 31.36 | 28.31 | 0.00 | 25.38 | 25.13 | 0.01 | 20.06 | 20.06 | 0.06 | 16.66 | 16.66 | 0.22 |
| 1050 | 72 | 62.61 | 32.86 | 0.00 | 57.23 | 30.14 | 0.00 | 50.90 | 27.09 | 0.00 | 43.49 | 23.73 | 0.00 | 34.84 | 20.06 | 0.00 |
| | 67 | 51.82 | 34.75 | 0.00 | 45.98 | 31.70 | 0.00 | 39.25 | 28.31 | 0.00 | 31.53 | 24.69 | 0.01 | 22.90 | 20.87 | 0.01 |
| | 62 | 41.81 | 36.27 | 0.01 | 35.78 | 32.96 | 0.01 | 29.15 | 29.47 | 0.01 | 23.60 | 23.60 | 0.08 | 19.62 | 19.62 | 0.24 |

**Manufacturer reserves the right to change, at any time, specifications and designs without notice and without obligations.**

**Table 6 – Cooling Capacities (MBtuh)**

| | | | | | | | | | | | | | | | | |
|---|---|---|---|---|---|---|---|---|---|---|---|---|---|---|---|---|
| **1225** | 72 | 68.60 | 36.10 | 0.00 | 62.85 | 33.28 | 0.00 | 56.08 | 30.11 | 0.00 | 48.02 | 26.55 | 0.00 | 38.54 | 22.55 | 0.00 |
| | 67 | 57.05 | 38.72 | 0.01 | 50.81 | 35.50 | 0.01 | 43.41 | 31.92 | 0.00 | 34.94 | 27.95 | 0.01 | 25.54 | 23.82 | 0.01 |
| | 62 | 46.23 | 40.86 | 0.01 | 39.68 | 37.32 | 0.01 | 32.60 | 33.60 | 0.02 | 26.95 | 26.95 | 0.10 | 22.46 | 22.46 | 0.25 |
| **1400** | 72 | 73.71 | 38.97 | 0.00 | 67.64 | 36.08 | 0.00 | 60.51 | 32.80 | 0.00 | 52.06 | 29.07 | 0.01 | 41.85 | 24.88 | 0.01 |
| | 67 | 61.55 | 42.32 | 0.01 | 54.96 | 38.99 | 0.01 | 47.17 | 35.23 | 0.01 | 37.95 | 31.04 | 0.01 | 27.97 | 26.64 | 0.02 |
| | 62 | 50.14 | 45.16 | 0.02 | 43.27 | 41.48 | 0.02 | 35.80 | 37.53 | 0.03 | 30.14 | 30.14 | 0.12 | 25.15 | 25.15 | 0.27 |
| **1600** | 72 | 78.67 | 41.89 | 0.00 | 72.30 | 38.96 | 0.00 | 64.83 | 35.58 | 0.01 | 55.92 | 31.76 | 0.01 | 45.16 | 27.34 | 0.02 |
| | 67 | 65.91 | 46.06 | 0.02 | 59.04 | 42.67 | 0.02 | 50.80 | 38.77 | 0.02 | 41.09 | 34.39 | 0.02 | 30.45 | 29.70 | 0.03 |
| | 62 | 54.03 | 49.74 | 0.02 | 46.89 | 45.95 | 0.03 | 39.16 | 41.76 | 0.04 | 33.49 | 33.49 | 0.15 | 28.02 | 28.02 | 0.29 |
| **1750** | 72 | 81.90 | 43.87 | 0.01 | 75.39 | 40.88 | 0.01 | 67.68 | 37.48 | 0.02 | 58.47 | 33.58 | 0.02 | 47.34 | 29.06 | 0.02 |
| | 67 | 68.76 | 48.66 | 0.02 | 61.68 | 45.22 | 0.02 | 53.22 | 41.25 | 0.02 | 43.19 | 36.78 | 0.02 | 32.18 | 31.88 | 0.04 |
| | 62 | 56.62 | 52.98 | 0.03 | 49.32 | 49.11 | 0.03 | 41.57 | 41.19 | 0.05 | 35.82 | 35.82 | 0.17 | 30.02 | 30.02 | 0.30 |
| **SIZE 60** | | | | | | | | | | | | | | | | |
| **1050** | 72 | 79.55 | 38.39 | 0.00 | 72.99 | 35.30 | 0.00 | 65.21 | 31.82 | 0.00 | 56.07 | 27.96 | 0.00 | 45.28 | 23.69 | 0.00 |
| | 67 | 65.98 | 40.54 | 0.00 | 58.84 | 37.05 | 0.00 | 50.47 | 33.18 | 0.00 | 40.84 | 28.98 | 0.00 | 29.88 | 24.50 | 0.00 |
| | 62 | 53.30 | 42.23 | 0.00 | 45.80 | 38.43 | 0.00 | 37.36 | 34.36 | 0.01 | 29.92 | 29.92 | 0.07 | 24.95 | 24.95 | 0.22 |
| **1225** | 72 | 87.50 | 42.31 | 0.00 | 80.43 | 39.08 | 0.00 | 72.12 | 35.46 | 0.00 | 62.20 | 31.35 | 0.00 | 50.39 | 26.76 | 0.00 |
| | 67 | 72.90 | 45.29 | 0.00 | 65.20 | 41.61 | 0.00 | 56.12 | 37.49 | 0.00 | 45.43 | 32.88 | 0.00 | 33.42 | 28.01 | 0.01 |
| | 62 | 59.18 | 47.71 | 0.01 | 50.98 | 43.61 | 0.01 | 41.86 | 39.23 | 0.01 | 34.26 | 34.26 | 0.08 | 28.63 | 28.63 | 0.23 |
| **1400** | 72 | 94.29 | 45.76 | 0.00 | 86.84 | 42.45 | 0.00 | 78.04 | 38.71 | 0.00 | 67.56 | 34.46 | 0.00 | 54.92 | 29.60 | 0.00 |
| | 67 | 78.85 | 49.60 | 0.01 | 70.71 | 45.82 | 0.00 | 61.08 | 41.50 | 0.01 | 49.58 | 36.61 | 0.01 | 36.65 | 31.38 | 0.01 |
| | 62 | 64.33 | 52.82 | 0.01 | 55.68 | 48.55 | 0.01 | 45.98 | 43.88 | 0.02 | 38.38 | 38.38 | 0.10 | 32.14 | 32.14 | 0.25 |
| **1600** | 72 | 100.91 | 49.28 | 0.00 | 93.10 | 45.91 | 0.00 | 83.86 | 42.08 | 0.00 | 72.84 | 37.68 | 0.00 | 59.46 | 32.60 | 0.01 |
| | 67 | 84.67 | 54.09 | 0.01 | 76.18 | 50.22 | 0.01 | 66.02 | 45.76 | 0.01 | 53.86 | 40.66 | 0.01 | 40.02 | 35.07 | 0.02 |
| | 62 | 69.49 | 58.29 | 0.01 | 60.49 | 53.89 | 0.01 | 50.41 | 49.00 | 0.02 | 42.85 | 42.85 | 0.13 | 35.97 | 35.97 | 0.26 |
| **1750** | 72 | 105.21 | 51.67 | 0.00 | 97.24 | 48.25 | 0.01 | 87.70 | 44.38 | 0.01 | 76.28 | 39.90 | 0.01 | 62.50 | 34.70 | 0.01 |
| | 67 | 88.49 | 57.22 | 0.01 | 79.74 | 53.27 | 0.01 | 69.29 | 48.78 | 0.01 | 56.75 | 43.55 | 0.01 | 42.37 | 37.74 | 0.02 |
| | 62 | 72.94 | 62.18 | 0.02 | 63.73 | 57.71 | 0.02 | 53.59 | 52.69 | 0.03 | 46.02 | 46.02 | 0.14 | 38.71 | 38.71 | 0.28 |
| **2000** | 72 | 111.40 | 55.29 | 0.01 | 103.09 | 51.86 | 0.01 | 93.23 | 47.91 | 0.01 | 81.31 | 43.32 | 0.01 | 66.94 | 38.00 | 0.01 |
| | 67 | 93.99 | 62.07 | 0.02 | 84.88 | 58.05 | 0.02 | 74.05 | 53.44 | 0.02 | 61.00 | 48.09 | 0.02 | 46.00 | 41.99 | 0.03 |
| | 62 | 77.95 | 68.26 | 0.02 | 68.57 | 63.72 | 0.03 | 58.99 | 58.28 | 0.06 | 51.02 | 51.02 | 0.17 | 42.96 | 42.96 | 0.30 |

**CFM** - Cubic Ft per Minute **EWB** - Entering Wet Bulb (_F / _C) **LWB** - Leaving Wet Bulb (_F / _C) **TC** - Gross Cooling Capacity 1000 Btuh

**SHC** - Gross Sensible Capacity 1000 Btuh **BF** - Bypass Factor **MBH** - 1000 Btuh

**NOTES:**

1. Contact manufacturer for cooling capacities at conditions other than shown in table.
2. Formulas:
   Leaving db = entering db - $\frac{\text{sensible heat cap.}}{1.09 \times \text{CFM}}$
   Leaving wb = wb corresponding to enthalpy of air leaving coil ($h_{lwb}$)
   $h_{lwb} = h_{ewb} - \frac{\text{total capacity (Btuh)}}{4.5 \times \text{CFM}}$
   where $h_{ewb}$ = enthalpy of air entering coil. Direct interpolation is permissible. Do not extrapolate.
3. SHC is based on 80_F (27_C) db temperature of air entering coil. Below 80_F (27_C) db, subtract (Correction Factor x CFM) from SHC. Above 80_F (27_C) db, add (Correction Factor x CFM) to SHC.
4. Bypass Factor = 0 indicates no psychometric solution. Use bypass factor of next lower EWB for approximation.

**SHC Correction Factor**

| | ENTERING AIR DRY-BULB TEMPERATURE (°F) | | | | | |
|---|---|---|---|---|---|---|
| **BYPASS FACTOR** | 79 | 78 | 77 | 76 | 75 | Under 75 |
| | 81 | 82 | 83 | 84 | 85 | Over 85 |
| | **Correction Factor** | | | | | |
| 0.10 | .098 | 1.96 | 2.94 | 3.92 | 4.91 | Use formula shown below |
| 0.20 | 0.87 | 1.74 | 2.62 | 3.49 | 4.36 | |
| 0.30 | 0.76 | 1.53 | 2.29 | 3.05 | 3.82 | |

Interpolation is permissible. Correction Factor = 1.09 x (1 - BF) x (db - 80)

# PERFORMANCE DATA (cont.)

**Table 7 – Estimated Sound Power Level of Airflow from Duct (dB)**

| UNIT SIZE | CONDITIONS | | OCTAVE BAND CENTER FREQUENCY* | | | | | | |
|---|---|---|---|---|---|---|---|---|---|
| | CFM | Ext Static Pressure | 63 | 125 | 250 | 500 | 1000 | 2000 | 4000 |
| 24 | 400 | 0.50 | 69.0 | 65.0 | 61.0 | 58.0 | 56.0 | 54.0 | 50.0 |
| | 600 | 0.50 | 70.8 | 66.8 | 62.8 | 59.8 | 57.8 | 55.8 | 51.8 |
| | 800 | 0.50 | 72.0 | 68.0 | 64.0 | 61.0 | 59.0 | 57.0 | 53.0 |
| | 1000 | 0.50 | 73.0 | 69.0 | 65.0 | 62.0 | 60.0 | 58.0 | 54.0 |
| | 1200 | 0.50 | 73.8 | 69.8 | 65.8 | 62.8 | 60.8 | 58.8 | 54.8 |
| | 1400 | 0.50 | 74.4 | 70.4 | 66.4 | 63.4 | 61.4 | 59.4 | 55.4 |
| 36 | 400 | 0.50 | 69.0 | 65.0 | 61.0 | 58.0 | 56.0 | 54.0 | 50.0 |
| | 600 | 0.50 | 70.8 | 66.8 | 62.8 | 59.8 | 57.8 | 55.8 | 51.8 |
| | 800 | 0.50 | 72.0 | 68.0 | 64.0 | 61.0 | 59.0 | 57.0 | 53.0 |
| | 1000 | 0.50 | 73.0 | 69.0 | 65.0 | 62.0 | 60.0 | 58.0 | 54.0 |
| | 1200 | 0.50 | 73.8 | 69.8 | 65.8 | 62.8 | 60.8 | 58.8 | 54.8 |
| | 1400 | 0.50 | 74.4 | 70.4 | 66.4 | 63.4 | 61.4 | 59.4 | 55.4 |
| | 1600 | 0.50 | 75.0 | 71.0 | 67.0 | 64.0 | 62.0 | 60.0 | 56.0 |
| 48 | 400 | 0.50 | 69.0 | 65.0 | 61.0 | 58.0 | 56.0 | 54.0 | 50.0 |
| | 600 | 0.50 | 70.8 | 66.8 | 62.8 | 59.8 | 57.8 | 55.8 | 51.8 |
| | 800 | 0.50 | 72.0 | 68.0 | 64.0 | 61.0 | 59.0 | 57.0 | 53.0 |
| | 1000 | 0.50 | 73.0 | 69.0 | 65.0 | 62.0 | 60.0 | 58.0 | 54.0 |
| | 1200 | 0.50 | 73.8 | 69.8 | 65.8 | 62.8 | 60.8 | 58.8 | 54.8 |
| | 1400 | 0.50 | 74.4 | 70.4 | 66.4 | 63.4 | 61.4 | 59.4 | 55.4 |
| | 1600 | 0.50 | 75.0 | 71.0 | 67.0 | 64.0 | 62.0 | 60.0 | 56.0 |
| 60 | 600 | 0.50 | 70.8 | 66.8 | 62.8 | 59.8 | 57.8 | 55.8 | 51.8 |
| | 800 | 0.50 | 72.0 | 68.0 | 64.0 | 61.0 | 59.0 | 57.0 | 53.0 |
| | 1000 | 0.50 | 73.0 | 69.0 | 65.0 | 62.0 | 60.0 | 58.0 | 54.0 |
| | 1200 | 0.50 | 73.8 | 69.8 | 65.8 | 62.8 | 60.8 | 58.8 | 54.8 |
| | 1400 | 0.50 | 74.4 | 70.4 | 66.4 | 63.4 | 61.4 | 59.4 | 55.4 |
| | 1600 | 0.50 | 75.0 | 71.0 | 67.0 | 64.0 | 62.0 | 60.0 | 56.0 |
| | 1800 | 0.50 | 75.5 | 71.5 | 67.5 | 64.5 | 62.5 | 60.5 | 56.5 |
| | 2000 | 0.50 | 76.0 | 72.0 | 68.0 | 65.0 | 63.0 | 61.0 | 57.0 |
| | 2150 | 0.50 | 76.3 | 72.3 | 68.3 | 65.3 | 63.3 | 61.3 | 57.3 |

*. Estimated sound power levels have been derived using the method described in the 1987 ASHRAE HVAC Systems & Applications Handbook, Chapter 52, p. 52.7.

**Table 8 – Air Delivery Performance Correction Component Pressure Drop (in. wc) at Indicated Airflow (Dry to Wet Coil)**

| UNIT SIZE | CFM | | | | | | | | | | |
|---|---|---|---|---|---|---|---|---|---|---|---|
| | 600 | 700 | 800 | 900 | 1000 | 1100 | 1200 | 1300 | 1400 | 1500 | 1600 |
| 24 | 0.012 | 0.016 | 0.022 | 0.028 | 0.034 | 0.040 | 0.049 | — | — | — | — |
| 36 | — | 0.026 | 0.034 | 0.042 | 0.052 | 0.063 | 0.075 | 0.083 | 0.091 | 0.098 | 0.110 |
| 48 | — | 0.006 | 0.008 | 0.010 | 0.012 | 0.015 | 0.017 | 0.020 | 0.023 | 0.027 | 0.030 |
| | CFM | | | | | | | | | | |
| | 1100 | 1200 | 1300 | 1400 | 1500 | 1600 | 1700 | 1800 | 1900 | 2000 | 2100 |
| 60 | 0.013 | 0.016 | 0.018 | 0.020 | 0.023 | 0.027 | 0.030 | 0.034 | 0.039 | 0.044 | 0.048 |

**Table 9 – Factory-Installed Filter Static Pressure Drop (in wc)**

| | CFM | | | | | | | | |
|---|---|---|---|---|---|---|---|---|---|
| Size | 400 | 600 | 800 | 1000 | 1200 | 1400 | 1600 | 1800 | 2000 |
| 24 | 0.020 | 0.044 | 0.048 | 0.072 | 0.100 | — | — | — | — |
| 36 | — | 0.020 | 0.035 | 0.051 | 0.070 | 0.092 | — | — | — |
| 48 | — | — | 0.035 | 0.051 | 0.070 | 0.092 | 0.120 | — | — |
| 60 | — | — | — | 0.038 | 0.053 | 0.070 | 0.086 | 0.105 | 0.133 |

Manufacturer reserves the right to change, at any time, specifications and designs without notice and without obligations.

### Table 10 – Units Without Electric Heat

| UNIT SIZE | VOLTS/PH/HZ | MTR HP | MTR FLA | SINGLE CIRCUIT | | BRANCH CIRCUIT |
|---|---|---|---|---|---|---|
| | | | | MCA | MOCP | Min Wire Size Awg* |
| 24 | 208/230/1/60 | 1/2 | 4 | 5 | 15 | 14 |
| 36 | 208/230/1/60 | 1/2 | 4 | 5 | 15 | 14 |
| 48 | 208/230/1/60 | 3/4 | 5.7 | 7.1 | 15 | 14 |
| 60 | 208/230/1/60 | 3/4 | 5.7 | 7.1 | 15 | 14 |

* Use copper wire only to connect unit. If other than uncoated (non-plated) 75°C ambient, copper wire (solid wire for 10 AWG and smaller, stranded wire for larger than 10 AWG) is used consult applicable tables of the National Electric Code (ANSI/NFPA 70).
**NOTE**: If branch circuit wire length exceeds 100 ft / 30.5 m, consult NEC 210-19a to determine maximum wire length. Use 2% voltage drop.
**FLA** - Full Load Amps

### Table 11 – Electrical Data for Units with Electric Heat

| HEATER PART NO. | kW @ 240 V | VOLTS/PH | STAGES (kW OPERATING) | INTERNAL CIRCUIT PROTECTION | FAN COIL SIZE USED WITH | HEATING CAP.* @ 230V | INTELLIGENT HEAT CAPABLE† (kW) |
|---|---|---|---|---|---|---|---|
| EHC05BKN | 5 | 230/1 | 5 | None | All | 15,700 | - |
| EHC07BKN | 8 | 230/1 | 8 | None | All | 25,100 | - |
| EHC10BKN | 10 | 230/1 | 10 | None | All | 31,400 | - |
| EHC15BKF | 15 | 230/1 | 5, 15 | Fuse‡ | All | 47,100 | 5, 10, 15 |
| EHC20BKF | 20 | 230/1 | 5, 20 | Fuse‡ | All | 62,800 | 5, 15, 20 |
| EHC09BKCN | 9 | 230/1** | 3, 9 | None | All | 28,200 | 3, 6, 9 |
| EHC15BHN | 15 | 230/1 | 5, 15 | None | All | 47,100 | - |
| EHC18BHN | 18 | 230/3†† | 6, 12, 18 | None | All | 56,500 | - |
| EHC25BHCF | 24 | 230/3†† | 8, 16, 24 | Fuse | 48, 60 | 78,300 | 8, 16, 24 |
| EHC30BHCF | 30 | 230/3†† | 10, 20, 30 | Fuse | 48, 60 | 94,100 | 10, 20, 30 |
| EHC05BKB | 5 | 230/1 | 5 | Circuit Breaker | All | 15,700 | - |
| EHC07BKB | 8 | 230/1 | 8 | Circuit Breaker | All | 25,100 | - |
| EHC10BKB | 10 | 230/1 | 10 | Circuit Breaker | All | 31,400 | - |
| EHC15BKB | 15 | 230/1 | 5, 15 | Circuit Breaker | All | 47,100 | 5, 10, 15 |
| EHC20BKB | 20 | 230/1 | 5, 20 | Circuit Breaker | All | 62,800 | 5, 15, 20 |

*. Does not include heat from blower motor.
†. Heaters designed with kW operating values are intelligent heat capable when used with compatible thermostat.
‡. Single circuit application of F15 and F20 heaters requires single-point wiring kit accessory.
**. Field convertible to 3 phase.
††. These heaters are field convertible to 1 phase, single or multiple supply circuit.

NOTE: for 240 volts, multiply 230V heater amps by 1.04.

### Table 12 – Electric Heater Internal Protection

| HEATER kW | PHASE | FUSES QTY / SIZE | CKT BKR QTY / SIZE* |
|---|---|---|---|
| 5 | 1 | — | 1/60 |
| 8 | 1 | — | 1/60 |
| 9 | 1/3 | — | — |
| 10 | 1 | — | 1/60 |
| 15 | 1 | 2/30, 2/60 | 2/60 |
| 15 | 3 | — | — |
| 18 | 3 | — | — |
| 20 | 1 | 4/60 | 2/60 |
| 24 | 1/3 | 6/60 | — |
| 30 | 1/3 | 6/60 | — |

* All circuit breakers are 2 pole.

## Table 13 – Electric Heater Electrical Data

| FC Size | Motor FLA used | HEATER PART NO. | kW | | PHASE | Internal Circuit Protection | HEATER AMPS 208/230V* | | | MIN AMPACITY 208/230V* | | | BRANCH CIRCUIT Min Wire Size (AWG) 208/230V† | | | BRANCH CIRCUIT Min Gnd Wire Size 208/230V† | | | BRANCH CIRCUIT Max Fuse/Ckt Bkr Amps 208/230V | | |
|---|---|---|---|---|---|---|---|---|---|---|---|---|---|---|---|---|---|---|---|---|---|
| | | | | | | | Single Circuit | Dual Circuit | | Single Circuit | Dual Circuit | | Single Circuit | Dual Circuit | | Single Circuit | Dual Circuit | | Single Circuit | Dual Circuit | |
| | | | 240V | 208V | | | | L1,L2 | L3,L4 | | L1,L2 | L3,L4 | | L1,L2 | L3,L4 | | L1,L2 | L3,L4 | | L1,L2 | L3,L4 |
| 24-36 | 4.0 | EHC05BKN | 5 | 3.8 | 1 | None | 17.8/19.7 | — | — | 27.3/29.6 | — | — | 10/10 | — | — | 10/10 | — | — | 30/30 | — | — |
| 24-36 | 4.0 | EHC05BKB | 5 | 3.8 | 1 | Ckt Bkr | 17.8/19.7 | — | — | 27.3/29.6 | — | — | 10/10 | — | — | 10/10 | — | — | 30/30 | — | — |
| 48-60 | 5.7 | EHC05BKN | 5 | 3.8 | 1 | None | 17.8/19.7 | — | — | 29.4/31.8 | — | — | 10/8 | — | — | 10/10 | — | — | 30/35 | — | — |
| 48-60 | 5.7 | EHC05BKB | 5 | 3.8 | 1 | Ckt Bkr | 17.8/19.7 | — | — | 29.4/31.8 | — | — | 10/8 | — | — | 10/10 | — | — | 30/35 | — | — |
| 24-36 | 4.0 | EHC07BKN | 8 | 6.0 | 1 | None | 28.5/31.5 | — | — | 40.6/44.4 | — | — | 8/8 | — | — | 10/10 | — | — | 45/45 | — | — |
| 24-36 | 4.0 | EHC07BKB | 8 | 6.0 | 1 | Ckt Bkr | 28.5/31.5 | — | — | 40.6/44.4 | — | — | 8/8 | — | — | 10/10 | — | — | 45/45 | — | — |
| 48-60 | 5.7 | EHC07BKN | 8 | 6.0 | 1 | None | 28.5/31.5 | — | — | 42.8/46.5 | — | — | 8/8 | — | — | 10/10 | — | — | 45/50 | — | — |
| 48-60 | 5.7 | EHC07BKB | 8 | 6.0 | 1 | Ckt Bkr | 28.5/31.5 | — | — | 42.8/46.5 | — | — | 8/8 | — | — | 10/10 | — | — | 45/50 | — | — |
| 24-36 | 4.0 | EHC10BKN | 10 | 7.5 | 1 | None | 35.6/39.4 | — | — | 49.5/54.3 | — | — | 8/6 | — | — | 10/10 | — | — | 50/60 | — | — |
| 24-36 | 4.0 | EHC10BKB | 10 | 7.5 | 1 | Ckt Bkr | 35.6/39.4 | — | — | 49.5/54.3 | — | — | 8/6 | — | — | 10/10 | — | — | 50/60 | — | — |
| 48-60 | 5.7 | EHC10BKN | 10 | 7.5 | 1 | None | 35.6/39.4 | — | — | 51.6/56.4 | — | — | 6/6 | — | — | 10/10 | — | — | 60/60 | — | — |
| 48-60 | 5.7 | EHC10BKB | 10 | 7.5 | 1 | Ckt Bkr | 35.6/39.4 | — | — | 51.6/56.4 | — | — | 6/6 | — | — | 10/10 | — | — | 60/60 | — | — |
| 36 | 4.0 | EHC09BKCN‡ | 9 | 6.8 | 1 | None | 32.2/35.6 | — | — | 45.3/49.5 | — | — | 8/6 | — | — | 10/10 | — | — | 50/50 | — | — |
| 36 | 4.0 | EHC09BKCN | 9 | 6.8 | 3 | None | 18.6/20.6 | — | — | 28.3/30.8 | — | — | 8/8 | — | — | 10/10 | — | — | 30/35 | — | — |
| 48-60 | 5.7 | EHC09BKCN‡ | 9 | 6.8 | 1 | None | 32.2/35.6 | — | — | 47.4/51.6 | — | — | 8/6 | — | — | 10/10 | — | — | 50/60 | — | — |
| 48-60 | 5.7 | EHC09BKCN | 9 | 6.8 | 3 | None | 18.6/20.6 | — | — | 30.4/32.9 | — | — | 8/8 | — | — | 10/10 | — | — | 35/35 | — | — |
| 24-36 | 4.0 | EHC15BKF** | 15 | 11.3 | 1 | Fuse | 53.4/59.1 | 35.6/39.4 | 17.8/19.7 | 71.8/78.9 | 49.5/54.3 | 22.3/24.6 | 4/4 | 8/6 | 10/10 | 8/8 | 10/10 | 10/10 | 80/80 | 50/60 | 25/25 |
| 24-36 | 4.0 | EHC15BKB | 15 | 11.3 | 1 | Ckt Bkr | — | 35.6/39.4 | 17.8/19.7 | — | 49.5/54.3 | 22.3/24.6 | — | 8/6 | 10/10 | — | 10/10 | 10/10 | — | 50/60 | 25/25 |
| 48-60 | 5.7 | EHC15BKF** | 15 | 11.3 | 1 | Fuse | 53.4/59.1 | 35.6/39.4 | 17.8/19.7 | 73.9/81.0 | 51.6/56.4 | 22.3/24.6 | 4/4 | 6/6 | 10/10 | 8/8 | 10/10 | 10/10 | 80/90 | 60/60 | 25/25 |
| 48-60 | 5.7 | EHC15BKB | 15 | 11.3 | 1 | Ckt Bkr | — | 35.6/39.4 | 17.8/19.7 | — | 51.6/56.4 | 22.3/24.6 | — | 6/6 | 10/10 | — | 10/10 | 10/10 | — | 60/60 | 25/25 |
| 36 | 4.0 | EHC15BHN | 15 | 11.3 | 3 | None | 30.8/34.1 | — | — | 43.5/47.6 | — | — | 8/6 | — | — | 10/10 | — | — | 50/50 | — | — |
| 48-60 | 5.7 | EHC15BHN | 15 | 11.3 | 3 | None | 30.8/34.1 | — | — | 45.6/49.8 | — | — | 8/6 | — | — | 10/10 | — | — | 50/50 | — | — |
| 48-60 | 5.7 | EHC18BHN | 18 | 13.5 | 3 | None | 37.2/41.2 | — | — | 53.6/58.6 | — | — | 6/6 | — | — | 10/10 | — | — | 60/60 | — | — |
| 36 | 4.0 | EHC20BKF** | 20 | 15.0 | 1 | Fuse | 71.2/78.8 | 35.6/39.4 | 35.6/39.4 | 94.0/103.5 | 49.5/54.3 | 44.5/49.3 | 3/2 | 6/6 | 8/8 | 8/6 | 10/10 | 10/10 | 100/110 | 50/60 | 45/50 |
| 36 | 4.0 | EHC20BKB | 20 | 15.0 | 1 | Ckt Bkr | — | 35.6/39.4 | 35.6/39.4 | — | 49.5/54.3 | 44.5/49.3 | — | 6/6 | 8/8 | — | 10/10 | 10/10 | — | 50/60 | 45/50 |
| 48-60 | 5.7 | EHC20BKF** | 20 | 15.0 | 1 | Fuse | 71.2/78.8 | 35.6/39.4 | 35.6/39.4 | 96.3/105.6 | 51.6/56.4 | 44.5/49.3 | 3/2 | 6/6 | 8/8 | 8/6 | 10/10 | 10/10 | 100/110 | 60/60 | 45/50 |
| 48-60 | 5.7 | EHC20BKB | 20 | 15.0 | 1 | Ckt Bkr | — | 35.6/39.4 | 35.6/39.4 | — | 51.6/56.4 | 44.5/49.3 | — | 6/6 | 8/8 | — | 10/10 | 10/10 | — | 60/60 | 45/50 |
| 48-60 | 5.7 | EHC25BHCF†† | 24 | 18.0 | 3 | Fuse | 49.3/54.6 | — | — | 68.8/75.4 | — | — | 4/4 | — | — | 8/8 | — | — | 70/80 | — | — |
| 48-60 | 5.7 | | 24 | 18.0 | 1 | Fuse | 85.5/94.5 | — | — | 114.0/125.3 | — | — | 2/1 | — | — | 6/6 | — | — | 125/150 | — | — |
| 48-60 | 5.7 | EHC30BHCF†† | 30 | 22.5 | 3 | Fuse | 61.7/68.2 | — | — | 84.3/92.4 | — | — | 4/3 | — | — | 8/8 | — | — | 90/100 | — | — |
| 48-60 | 5.7 | | 30 | 22.5 | 1 | Fuse | 106.8/118.1 | — | — | 140.6/154.8 | — | — | 0/00 | — | — | 6/6 | — | — | 150/175 | — | — |

*. For 240V, multiply 230V heater amps by 1.04. Wire sizing and over-current protection may need adjustment per local code requirements.
†. Copper wire must be used. If other than uncoated (non-plated), 75°C ambient, copper wire (solid wire for smaller, and stranded wire for larger than 10 AWG) is used, consult applicable tables of the National Electric Code (ANSI/NFPA 70).
‡. Field convertible to 3 phase.
**. Single circuit application of F15 and F20 heaters requires single-point wiring kit accessory.
††. Field convertible to 1 phase, single or multiple supply circuit.

## Table 14 – Field Multipoint Wiring or 24- and 30-kW Single Phase

| FC Size | Motor FLA used | HEATER PART NO. | kW | | PHASE | HEATER AMPS 208/230V | | | MIN AMPACITY 208/230V* | | | MIN WIRE SIZE (AWG) 208/230V† | | | MIN GND WIRE SIZE 208/230V | MAX FUSE/CKT BKR AMPS 208/230V | | |
|---|---|---|---|---|---|---|---|---|---|---|---|---|---|---|---|---|---|---|
| | | | 240V | 208V | | L1,L2 | L3,L4 | L5,L6 | L1,L2 | L3,L4 | L5,L6 | L1,L2 | L3,L4 | L5,L6 | | L1,L2 | L3,L4 | L5,L6 |
| 48-60 | 5.7 | EHC25DHCF‡ | 24 | 18.0 | 1 | 28.5/31.5 | 28.5/31.5 | 28.5/31.5 | 43.3/47.0 | 35.6/39.4 | 35.6/39.4 | 8/8 | 8/8 | 8/8 | 10/10 | 50/50 | 40/40 | 40/40 |
| 48-60 | 5.7 | EHC30DHCF‡ | 30 | 22.5 | 1 | 35.6/39.4 | 35.6/39.4 | 35.6/39.4 | 52.1/56.9 | 44.5/49.3 | 44.5/49.3 | 6/6 | 8/8 | 8/8 | 10/10 | 60/60 | 45/50 | 45/50 |

*. Includes blower motor amps of largest fan coil used with heater.
†. Copper wire must be used. If other than uncoated (non-plated), 75°C ambient, copper wire (solid wire for 10 AWG and smaller, stranded wire for larger than 10 AWG) is used, consult applicable tables of the NEC (ANSI/NFPA 70).
‡. Field convertible to 1 phase, single or multiple supply circuit.

# Accessories

### REQUIRED ACCESSORY

| ITEM | | ACCESSORY PART NO.* | FAN COIL SIZE USED WITH |
|---|---|---|---|
| 1 | Ion® Control with Wi-Fi® Remote Access Capability | SYST0101CW | All |
| | Ion® Communicating Relay Module (CRM) | SYST0101RM | All |

### ADDITIONAL ACCESSORIES

| ITEM | | ACCESSORY PART NO.* | FAN COIL SIZE USED WITH |
|---|---|---|---|
| 2 | Ion Series Smart Sensor | SYSTXZNSMS01 | All |
| 3 | Ion Remote Room Sensor | SYSTXIIRRS01 | All |
| 4 | Disconnect Kit | KFADK0301DSC | Cooling controls and heaters 3—10-kW |
| 5 | Downflow Base Kit | EBAC02NCB | 24, 36 |
| | | EBAC03NCB | 48 |
| | | EBAC04NCB | 60 |
| 6 | Downflow Conversion Kit | EBAC01DFS | Slope Coil Units—36 |
| | | EBAC02DFA | A-Coil Units—24, 48, 60 |
| 7 | Single-Point Wiring Kit | EBAC01SPK | Only with 15- and 20-kW Fused Heaters |
| 8 | Filter | See Table 3 for filter dimension details | |
| 9 | Fan Coil Filter Cabinet (Fan Coil Filter Media) | AHIC0017A (FAIC0017A2) | 24 |
| | | AHIC0021A (FAIC0021A2) | 36, 48 |
| | | AHIC0024A (FAIC0024A2) | 60 |
| 10 | PVC Condensate Trap Kit (50 pack) | KFAET0150ETK | All |
| 11 | Air Cleaner 240-volt Conversion Kit | KEAVC0201240 | All |
| 12 | Downflow/Horizontal Conversion Gasket Kit | EBAC01GSK | All |
| 13 | Horizontal Water Management Kit (25 pack) | NAMA00125HC | All |
| 14 | Door Gasket Kit ** | 1191140 | All |
| 15 | Hydronic Heat Interface Relay Kit for Communicating Fan Coils | AFAINTHWC01A | All |

* Factory authorized and listed, field installed.
**This kit is for replacement of factory installed gaskets if they are damaged or removed from the fan coil.

# Accessory Kits Description Suggested and Required Use

1. **Ion Control with Integrated Wi-Fi**
   Deluxe programmable wall-mounted system control with integrated Wi-Fi.
   **Ion Control**
   Deluxe programmable wall-mounted system control without remote access.

2. Ion **Smart Sensor**
   Wall control used to monitor temperature and/or fan control.

   SUGGESTED USE: For use in zone systems.

3. Ion **Remote Room Sensor**
   Wired remote temperature sensor for zone control.

   SUGGESTED USE: For use in zone systems.

4. **Disconnect Kit**
   The kit is used to disconnect electrical power to the fan coil so service or maintenance may be performed safely.

   SUGGESTED USE: Units for 3- through 10-kW electric resistance heaters and cooling controls.

5. **Downflow Base Kit**
   This kit is designed to provide a 1-in. minimum clearance between unit discharge plenum, ductwork, and combustible materials. It also provides a gap-free seal with the floor.

   REQUIRED USE: This kit must be used whenever fan coils are used in downflow applications.

6. **Downflow Conversion Kit**
   Fan coils are shipped from the factory for upflow or horizontal-left applications. Downflow conversion kits provide proper condensate water drainage and support for the coil when used in downflow applications. Separate kits are available for slope coils and A-coils.

   REQUIRED USE: This kit must be used whenever fan coils are used in downflow applications.

7. **Single Point Wiring Kit**
   The single point wiring kit acts as a jumper between L1 and L3 lugs, and between the L2 and L4 lugs. This allows the installer to run 2 heavy-gauge, high-voltage wires into the fan coil rather than 4 light-gauge, high-voltage wires.

   SUGGESTED USE: Fan coils with 15- and 20-kW fused heaters only.

8. **Filter Kit (12 pack)**
   The kit consists of 12 fan coil framed filters. These filters collect large dust particles from the return air entering the fan coil and prevents them from collecting on the coil. This process helps to keep the coil clean, which increases heat transfer and, in turn, the efficiency of the system.

   SUGGESTED USE: To replace filters in fan coils.
   REQUIRED USE: All units unless a filter grille is used.

9. **Filter Media Cabinet and Cartridges**
   This cabinet is mounted to the fan coil on the return air end and designed to slip over the outer fan coil casing. The cabinets are insulated using the same insulation as production fan coils. They are designed for the removal of particulates from indoor air using FILXXFNC00(14, 17, 21, 24) media filter cartridges.

   SUGGESTED USE: All fan coils.

10. **PVC Condensate Drain Trap Kit**
    This kit consists of 50 PVC condensate traps. Each trap is pre-formed and ready for field installation. This deep trap helps the system make and hold proper condensate flow even during blower initiation.

    SUGGESTED USE: All fan coils.

11. **Air Cleaner 240-volt Conversion Kit**
    The AIRA electronic air cleaner comes ready for 115V operation.

    REQUIRED USE: This kit is required when running 240-volt circuit to air cleaner.

12. **Downflow/Horizontal Conversion Gasket Kit**
    This kit provides the proper gasketing of units when applied in either a downflow or horizontal application.

    REQUIRED USE: Fan coils in either downflow or horizontal applications.

13. **Horizontal Water Management Kit**
    This kit provides proper installation of fan coils under conditions of high static pressure and high relative humidity.

    SUGGESTED USE: All fan coils (except FE5A and FF1).

14. **Door Gasket Kit**
    This kit consists of specific adhesive-backed foam strips which are applied to the unit door and frame, limiting air leakage.

15. **Hydronic Heat Interface Relay Kit for Communicating Fan Coils**
    This kit provides an interface for coils with Hydronic Heat equipment. It includes a relay with rectifier circuit board, wiring harness pre-wired to the relay with a 12-pin plug to connect to the fan coil heater control, stripped leads, mounting parts and instructions.

    SUGGESTED USE: All communicating fan coils

© 2025 Carrier. All rights reserved.

**Manufacturer reserves the right to change, at any time, specifications and designs without notice and without obligations.**