H4A6S
16 SEER2 Single-Stage Air Conditioner with R-410A Refrigerant
1-1/2 To 5 Tons

ICP COMMERCIAL

Product Specifications

This unit has been designed utilizing R-410A refrigerant. The environmentally sound refrigerant allows you to make a responsible decision in the protection of the earth's ozone layer.

NOTE: Ratings contained in this document are subject to change at any time. Always refer to the AHRI directory (www.ahridirectory.org) for the most up-to-date ratings information.

Features / Benefits

Efficiency
- 13.8 - 17.5 SEER2 (14 - 18.0 SEER) / 11.2 – 14.0 EER2 (11.2 - 14.5 EER)
- Indoor air quality accessories available

Reliability
- R-410A refrigerant - environmentally sound, won't deplete the ozone layer and low lifetime service cost.
- Scroll compressor
- Internal pressure relief valve
- Internal thermal overload

Performance
- Communicating, self-configuring operation when used with Ion® System Control
- Outdoor temperature sensor factory installed
- Compressor sound blanket standard
- Isolation compressor grommets

Durability
- Protection Package:
  – Solid, Durable sheet metal construction

Applications
- Long–line – up to 250 feet (76.20 m) total equivalent length, up to 200 feet (60.96 m) condenser above evaporator, or up to 80 ft. (24.4 m) evaporator above condenser (See Long Line Guide for more information.)
- Low ambient cooling (down to 0°F / -18°C) with approved low ambient accessory kits.

STANDARD FEATURES

Features	18	24	30	36	42	43	48	49	60	61
R-410A Refrigerant	X	X	X	X	X	X	X	X	X	X
SEER2 (Range depending on indoor combination)	14.3 - 16.5	14.3 - 16.5	14.3 - 16.5	14.3 - 16.5	13.8 - 15.5	14.3 - 16	13.8 - 15.5	14 - 16.5	13.8 - 15.2	14 - 16
Scroll Compressor	X	X	X	X	X	X	X	X	X	X
Field Installed Filter Drier	X	X	X	X	X	X	X	X	X	X
Front Seating Service Valves	X	X	X	X	X	X	X	X	X	X
Internal Pressure Relief Valve	X	X	X	X	X	X	X	X	X	X
Internal Thermal Overload	X	X	X	X	X	X	X	X	X	X
Long Line Capability	X	X	X	X	X	X	X	X	X	X
Low Ambient Capability with Kit	X	X	X	X	X	X	X	X	X	X
High Pressure Switch	X	X	X	X	X	X	X	X	X	X
Low Pressure Switch	X	X	X	X	X	X	X	X	X	X
Compressor Sound Blanket	X	X	X	X	X	X	X	X	X	X

MODEL NUMBER NOMENCLATURE

C	4	A	6	S	18	A	K	A	W	A
Brand **H** = Mainline ICP Commercial	**Refrigerant** **4** = R-410A	**Type** **A** = AC	**SEER2** **6**= 16 SEER2	**OD Design Type** **S**= Single Stage	**Nominal Capacity** **18** = 1.5 Tons **24** = 2 Tons **30** = 2.5 Tons **36** = 3 Tons **42** = 3.5 Tons **43** = 3.5 Tons **48** = 4 Tons **49** = 4 Tons **60** = 5 Tons **61** = 5 Tons	**Feature** A = Standard	**Voltage** K = 208/230-60-1	**Special Feature** A = Standard	**Region** W = Standard Southwest AC	**Major Series** A = Initial

Use of the AHRI Certified TM Mark indicates a manufacturer's participation in the program For verification of certification for individual products, go to www.ahridirectory.org.

Quality ISO 9001

This product has been designed and manufactured to meet Energy Star criteria for energy efficiency when matched with appropriate coil components. However, proper refrigerant charge and proper air flow are critical to achieve rated capacity and efficiency. Installation of this product should follow all manufacturing refrigerant charging and air flow instructions. **Failure to confirm proper charge and air flow may reduce energy efficiency and shorten equipment life.**

CATALOG ORDERING NUMBERS

Size	Catalog Ordering Number
18	H4A6S18AKAWA
24	H4A6S24AKAWA
30	H4A6S30AKAWA
36	H4A6S36AKAWA
42	H4A6S42AKAWA
43	H4A6S43AKAWA
48	H4A6S48AKAWA
49	H4A6S49AKAWA
60	H4A6S60AKAWA
61	H4A6S61AKAWA

Manufacturer reserves the right to change, at any time, specifications and designs without notice and without obligations.

Physical Data

Unit Size	18	24	30	36	42	43	48	49	60	61
Compressor Type	Scroll									
REFRIGERANT	R-410A									
Control	TXV (R-410A Hard Shutoff)									
Factory Charge lb (kg)*	5.30 (2.40)	6.10 (2.77)	6.60 (2.99)	6.80 (3.08)	8.10 (3.67)	11.70 (5.31)	8.10 (3.67)	12.40 (5.62)	10.10 4.58)	14.50 (6.58)
COND FAN	Propeller Type, Direct Drive									
Air Discharge	Vertical									
Air Qty (CFM)	2400	2400	2575	3700	3890	3890	3890	4090	4260	4320
Motor HP	1/12	1/12	1/10	1/4	1/4	1/12	1/4	1/3	1/4	1/3
Motor RPM	1100	1100	1100	1100	1100	1100	1100	800	1100	800
COND COIL										
Face Area (Sq ft)	17.2	17.2	19.4	21.5	17.2	17.2	17.2	30.1	21.5	30.1
Fins per In.	25	25	25	25	20	20	20	20	20	20
Rows	1	1	1	1	2	2	2	2	2	2
Circuits	4	4	5	6	8	8	8	10	9	12
VALVE CONNECT. (In. ID)										
Vapor	3/4	3/4	3/4	7/8	7/8	7/8	7/8	7/8	7/8	7/8
Liquid	3/8"									
REFRIGERANT TUBES* (In. OD)										
Rated Vapor†	3/4	3/4	3/4	7/8	7/8	7/8	7/8	7/8	1 1/8	1 1/8
Rated Liquid Line‡	3/8"									

*. For 15 ft. Line Set
†.Units are rated with 25 ft. (7.6m) of lineset length. See Vapor Line Sizing and Cooling Capacity Loss table when using other sizes and lengths of lineset.
‡.See Liquid Line Sizing For Cooling Only Systems with R-410A Refrigerant tables

REFRIGERANT PIPING LENGTH LIMITATIONS

Liquid Line Sizing and Maximum Total Equivalent Lengths for Cooling Only Systems with R-410A Refrigerant:

The maximum allowable length of a residential split system depends on the liquid line diameter and vertical separation between indoor and outdoor units.

See Table below for liquid line sizing and maximum lengths :

Table 1 – Maximum Total Equivalent Length*
Outdoor Unit BELOW Indoor Unit

Size	Liquid Line Connection	Liquid Line Diam. w/ TXV	AC with R-410A Refrigerant Maximum Total Equivalent Length†: Outdoor unit BELOW Indoor Vertical Separation ft (m)								
			0-5 (0-1.5)	6-10 (1.8-3.0)	11-20 (3.4-6.1)	21-30 (6.4-9.1)	31-40 (9.4-12.2)	41-50 (12.5-15.2)	51-60 (15.5-18.3)	61-70 (18.6-21.3)	71-80 (21.6-24.4)
18000	3/8	1/4	150	150	125	100	100	75	--	--	--
		5/16	250*	250*	250*	250*	250*	250*	250*	225*	150
		3/8	250*	250*	250*	250*	250*	250*	250*	250*	250*
24000	3/8	1/4	75	75	75	50	50	--	--	--	--
		5/16	250*	250*	250*	250*	250*	225*	175	125	100
		3/8	250*	250*	250*	250*	250*	250*	250*	250*	250*
30000	3/8	1/4	30	--	--	--	--	--	--	--	--
		5/16	175	225*	200	175	125	100	75	--	--
		3/8	250*	250*	250*	250*	250*	250*	250*	250*	250*
36000	3/8	5/16	175	150	150	100	100	100	75	--	--
		3//8	250*	250*	250*	250*	250*	250*	250*	250*	250*
42000	3/8	5/16	125	100	100	75	75	50	--	--	--
		3/8	250*	250*	250*	250*	250*	250*	250*	250*	150
48000	3/8	3/8	250*	250*	250*	250*	250*	250*	230	160	--
60000	3/8	3/8	250*	250*	250*	225*	190	150	110	--	--

*.Maximum actual length not to exceed 200 ft (61 m)
†.Total equivalent length accounts for losses due to elbows or fitting. See the Long Line Guideline for details.
-- = outside acceptable range

Table 2 – Maximum* Total Equivalent Length
Outdoor Unit ABOVE Indoor Unit

Size	Liquid Line Connection	Liquid Line Diam. w/ TXV	AC with R-410A Refrigerant Maximum Total Equivalent Length†: Outdoor unit ABOVE Indoor Vertical Separation ft (m)							
			25 (7.6)	26-50 (7.9-15.2)	51-75 (15.5-22.9)	76-100 (23.2-30.5)	101-125 (30.8-38.1)	126-150 (38.4-45.7)	151-175 (46.0-53.3)	176-200 (53.6-61.0)
18	3/8	1/4	175	250*	250*	250*	250*	250*	250*	250*
		5/16	250*	250*	250*	250*	250*	250*	250*	250*
		3/8	250*	250*	250*	250*	250*	250*	250*	250*
24	3/8	1/4	100	125	175	200	225*	250*	250*	250*
		5/16	250*	250*	250*	250*	250*	250*	250*	250*
		3/8	250*	250*	250*	250*	250*	250*	250*	250*
30	3/8	1/4	30	--	--	--	--	--	--	--
		5/16	250*	250*	250*	250*	250*	250*	250*	250*
		3/8	250*	250*	250*	250*	250*	250*	250*	250*
36	3/8	5/16	225*	250*	250*	250*	250*	250*	250*	250*
		3/8	250*	250*	250*	250*	250*	250*	250*	250*
42, 43	3/8	5/16	175	200	250*	250*	250*	250*	250*	250*
		3/8	250*	250*	250*	250*	250*	250*	250*	250*
48, 49	3/8	3/8	250*	250*	250*	250*	250*	250*	250*	250*
60, 61	3/8	3/8	250*	250*	250*	250*	250*	250*	250*	250*

*.Maximum actual length not to exceed 200 ft (61 m)
†.Total equivalent length accounts for losses due to elbows or fitting. See the Long Line Guideline for details.
-- = Outside acceptable range

Table 3 – Refrigerant Charge Adjustments

Liquid Line Size	R-410A Charge oz/ft (g/m)
3/8	0.60 (17.74) (Factory charge for lineset = 9 oz / 266.16 g)
5/16	0.40 (11.83)
1/4	0.27 (7.98)

Units are factory charged for 15 ft (4.6 m) of 3/8" liquid line. The factory charge for 3/8" lineset 9 oz.(266.16 g). When using other length or diameter liquid lines, charge adjustments are required per the chart above.

Charging Formula:

[(Lineset oz/ft X total length) – (factory charge for lineset)] = charge adjustment

Example 1: System has 15 ft of lineset* using existing 1/4" liquid line. What charge adjustment is required?

Formula:(.27 oz/ft X 15ft) – (9 oz) = (-4.95) oz.

Net result is to remove 4.95 oz of refrigerant from the system

Example 2: System has 45 ft of existing 5/16" liquid line. What is the charge adjustment?

Formula:(.40 oz/ft. X 45ft) – (9 oz.) = 9 oz.

Net result is to add 9 oz of refrigerant to the system

NOTE: Conditions must be favorable for charging by subcooling method. Indoor temperature must be 70°F to 80°F (21°C to 27°C), and outdoor temperature must be 70°F to 100°F (21°C to 38°C). If outside these conditions, adjust charge for long linesets by weigh-in method.

* When applicable. Refer to Physical Data Table in this PD and to the Installation Instructions for more information.

Long Line Applications

An application is considered Long Line, when the refrigerant level in the system requires the use of accessories to maintain acceptable refrigerant management for systems reliability. See Accessory Usage Guideline table for required accessories. Defining a system as long line depends on the liquid line diameter, actual length of the tubing, and vertical separation between the indoor and outdoor units.

For Air Conditioner systems, the chart below shows when an application is considered Long Line.

Table 4 – AC with R-410A Refrigerant Long Line Description ft (m) Beyond these lengths, a TXV is required

Total Length	Outdoor Unit Above or Below Indoor Unit
TXV required beyond 50 ft. (15.2 m)	TXV required beyond 20 ft. (6.1 m)

Table 5 – AC with R-410A Refrigerant Long Line Description ft (m) (Beyond these lengths, long line accessories are required)

Liquid Line Size	Units On Same Level	Outdoor Below Indoor	Outdoor Above Indoor
1/4 + TXV	No accessories needed within allowed lengths	No accessories needed within allowed lengths	175 (53.3)
5/16 + TXV	120 (36.6)	50 (15.2) vertical or 120 (36.6) total	120 (36.6)
3/8 + TXV	80 (24.4)	35 (10.7) vertical or 80 (24.4) total	80 (24.4)

Note: See Residential Piping and Long Line Guideline for details

VAPOR LINE SIZING AND COOLING CAPACITY LOSS

Acceptable vapor line diameters provide adequate oil return to the compressor while avoiding excessive capacity loss. The suction line diameters shown in the chart below are acceptable for AC systems with **R-410A** refrigerant:

Table 6 – Vapor Line Sizing and Cooling Capacity Losses — R-410A Refrigerant 1-Stage Air Conditioner Applications

Unit Nominal Size (Btuh)	Maximum Liquid Line Diameters (In. OD)	Vapor Line Diameters (In. OD)	Cooling Capacity Loss (%) Total Equivalent Line Length ft. (m) 1-Stage AC with R-410A								
			26-50 (7.9-15.2)	51-80 (15.5-24.4)	81-100 (24.7-30.5)	101-125 (30.8-38.1)	126-150 (38.4-45.7)	151-175 (46.0-53.3)	176-200 (53.6-61.0)	201-225 (61.3-68.6)	226-250 (68.9-76.2)
18	3/8	1/2	1	2	3	5	6	7	8	9	11
		5/8	0	1	1	1	2	2	2	3	3
		3/4	0	0	0	0	1	1	1	1	1
24	3/8	5/8	0	1	2	2	3	3	4	5	5
		3/4	0	0	1	1	1	1	1	2	2
		7/8	0	0	0	0	0	1	1	1	1
30	3/8	5/8	1	2	3	3	4	5	6	7	8
		3/4	0	0	1	1	1	2	2	2	3
		7/8	0	0	0	0	1	1	1	1	1
36	3/8	5/8	1	2	4	5	6	8	9	10	12
		3/4	0	1	1	2	2	3	3	4	4
		7/8	0	0	0	1	1	1	1	2	2
42, 43	3/8	3/4	0	1	2	2	3	4	4	5	6
		7/8	0	0	1	1	1	2	2	2	3
		1 1/8	0	0	0	0	0	0	0	0	0
48, 49	3/8	3/4	0	1	2	3	4	5	5	6	7
		7/8	0	0	1	1	2	2	2	3	3
		1 1/8	0	0	0	0	0	0	0	1	1
60, 61	3/8	3/4	1	2	4	5	6	7	9	10	11
		7/8	0	1	2	2	3	4	4	5	5
		1 1/8	0	0	0	1	1	1	1	1	1

Applications in this area may be long line and may have height restrictions. See the Residential Piping and Long Line Guideline.

ACCESSORIES

KIT NUMBER	KIT NAME	18	24	30	36	42	43	48	49	60	61
NASA00201FS	FRZ THERM KIT	X	X	X	X	X	X	X	X	X	X
NASA001TD	TIME DELAY KIT (90 second TDR)	X	X	X	X	X	X	X	X	X	X
NASA00201TD	TIME DELAY KIT (30 second TDR)	X	X	X	X	X	X	X	X	X	X
NASA401LA	LOW AMBIENT COOLING KIT	X	X	X	X	X	X	X	X	X	X
NASA00301PM	FAN MOTOR KIT*								X		X
NASA012SC	HARD START KIT	X	X	X	X	X	X	X	X	X	X
NASA001AC	CYCLE PROTR KIT	X	X	X	X	X	X	X	X	X	X
NASA00201SF	SPRT FEET KIT	X	X	X	X	X	X	X	X	X	X
NASA401LS	SOL VALVE KIT	X	X	X	X	X	X	X	X	X	X
NASA00201WS	WINTER ST KIT	X	X	X	X	X	X	X	X	X	X
NASA00601CH	CRKC HTR KIT	X	X	X	X						
NASA00501CH	CRKC HTR KIT					X	X	X	S	X	S
NAEA40501TX	TXV KIT (For use with copper coils)	X	X	X							
NAEA40601TX	TXV KIT (For use with copper coils)				X	X	X				
NAEA40701TX	TXV KIT (For use with copper coils)							X	X	X	X
NAEB40501TX	TXV KIT (For use with aluminum coils)	X	X	X							
NAEB40601TX	TXV KIT (For use with aluminum coils)				X	X	X				
NAEB40701TX	TXV KIT (For use with aluminum coils)							X	X	X	X

*.Required for use with low ambient kits. Rated efficiency will not be met with this accessory installed.

X = Accessory
S = Standard

ACCESSORY USAGE GUIDELINE

ACCESSORY	REQUIRED FOR LOW-AMBIENT COOLING APPLICATIONS (Below 55°F/12.8°C)	REQUIRED FOR LONG LINE APPLICATIONS*	REQUIRED FOR SEA COAST APPLICATIONS (Within 2 miles/3.22 km)
Ball Bearing Fan Motor	Standard	Standard	Standard
Compressor Start Assist Capacitor and Relay	Yes	Yes	No
Crankcase Heater	Yes	Yes	No
Evaporator Freeze Thermostat	Yes	No	No
Hard Shut-Off TXV	Yes	Yes	Yes
Liquid Line Solenoid Valve	No	See Long Line Guideline	No
Low-ambient Pressure Switch	Yes†	No	No
Support Feet	Recommended	No	Recommended
Winter Start Control	Yes‡	No	No

*.For tubing set lengths between 80 and 200 ft. (24 and 61 m) horizontal or 35 ft. (10.7 m) vertical differential (total equivalent length), refer to the Residential Split-System Long Line Application Guideline.
†.In units equipped with ECM OD motor, motor and fan needs to be replaced per unit accessory guide to work properly. Unit will not meet AHRI rated efficiency once motor and fan are replaced to use this accessory.
‡.Required if Low Pressure Switch is factory or field installed.

Accessory Description and Usage (Listed Alphabetically)

1. Ball-Bearing Fan Motor

A fan motor with ball bearings which permits speed reduction while maintaining bearing lubrication.

2. Compressor Start Assist - Capacitor and Relay

Start capacitor and relay gives a ”hard” boost to compressor motor at each start up.

Usage Guideline:

Required for single-phase scroll compressors in the following applications:

Long line

Low ambient cooling

Suggested for all compressors in areas with a history of low voltage problems.

3. Crankcase Heater

An electric resistance heater which mounts to the base of the compressor to keep the lubricant warm during off cycles. Improves compressor lubrication on restart and minimizes the chance of liquid slugging.

Usage Guideline:

Required in low ambient cooling applications.

Required in long line applications.

Suggested in all commercial applications.

4. Cycle Protector

The cycle protector is designed to prevent compressor short cycling. This control provides an approximate 5-minute delay after power to the compressor has been interrupted for any reason, including power outage, protector control trip, thermostat jiggling, or normal cycling.

5. Evaporator Freeze Thermostat

An SPST temperature-actuated switch that stops unit operation when evaporator reaches freeze-up conditions.

Usage Guideline:

Required when low ambient kit has been added.

6. Low-Ambient Pressure Switch Kit

A long life pressure switch which is mounted to outdoor unit service valve. It is designed to cycle the outdoor fan motor in order to maintain head pressure within normal operating limits (approximately 100 psig to 225 psig). The control will maintain working head pressure at low-ambient temperatures down to 0°F (-18°C) when properly installed and also using wind baffles. Instructions provided in accessory kit.

Usage Guideline:

A Low-Ambient Pressure Switch must be used when cooling operation is used at outdoor temperatures below 55°F (12.8°C).

7. Outdoor Air Temperature Sensor

This device enables the thermostat to display the outdoor temperature. This device is also required to enable special thermostat features such as auxiliary heat lock out.

Usage Guideline:

Suggested for use with compatible thermostats.

8. Sound Hood

Wraparound sound reducing cover for the compressor. Reduces the sound level of the compressor.

Usage Guideline:

Suggested when unit is installed closer than 15 ft (4.57 m) to quiet areas, bedrooms, etc.

Suggested when unit is installed between two houses less than 10 ft (3 m) apart.

Accessory Description and Usage (Listed Alphabetically) Continued

9. Support Feet

Four or five stick-on plastic feet that raise the unit 4 in. (101.6 mm) above the mounting pad. This allows sand, dirt, and other debris to be flushed from the unit base, minimizing corrosion.

Usage Guideline:

Suggested in the following applications:

Coastal installations.

Windy areas or where debris is normally circulating.

Rooftop installations.

For improved sound ratings.

10. Thermostatic Expansion Valve (TXV)

A modulating flow-control valve which meters refrigerant liquid flow rate into the evaporator in response to the superheat of the refrigerant gas leaving the evaporator.

Kit includes valve, adapter tubes, and external equalizer tube. Hard shut off types are available.

Usage Guideline:

Required to achieve AHRI ratings in certain equipment combinations. Refer to combination ratings.

Hard shut off TXV or LLS required in air conditioner long line applications.

Required for use on all zoning systems.

11. Time-Delay Relay

An SPST delay relay which briefly continues operation of indoor blower motor to provide additional cooling after the compressor cycles off.

NOTE: Most indoor unit controls include this feature. For those that do not, use the guideline below.

Usage Guideline:

For improved efficiency ratings for certain combinations of indoor and outdoor units. Refer to AHRI Directory of Certified Product Performance (AHRI Directory).

When a Time-Delay Relay (TDR) is called for in the AHRI Directory, use a 30 second TDR for MicroChannel Indoor units and use a 90 second TDR for Round Tube Plate Fin Indoor units.

12. Winter Start Control

This control is designed to alleviate nuisance opening of the low-pressure switch by bypassing it for the first 3 minutes of operation.

AHRI RATINGS

For AHRI ratings certificates, please refer to the AHRI directory www.ahridirectory.org
Additional ratings and system combinations can be accessed via the Ratings Database here: ICP Commercial Ratings

Electrical Data

UNIT SIZE	V/PH	OPER VOLTS*		COMPR		FAN	MCA	MAX FUSE† or CKT BRK AMPS
		MAX	MIN	LRA	RLA	FLA		
18	208/230/1	253	197	42.6	8.8	0.50	11.5	20
24				49.7	9.3	0.50	12.1	20
30				71.3	11.7	0.60	15.2	25
36				80.1	12.2	1.40	16.7	25
42				120.0	25.0	1.52	32.8	50
43				109.0	16.7	0.50	21.4	35
48				120.0	25.0	1.52	32.8	50
49				124.0	18.5	2.80	25.9	40
60				150.0	25.6	1.40	33.4	50
61				140.6	26.3	2.80	35.7	50

*.Permissible limits of the voltage range at which the unit will operate satisfactorily
†.Time-Delay fuse.

FLA- Full Load Amps
LRA - Locked Rotor Amps
MCA- Minimum Circuit Amps
RLA- Rated Load Amps
NOTE:Control circuit is 24V on all units and requires external power source. Copper wire must be used from service disconnect to unit.
All motors/compressors contain internal overload protection.
Complies with requirements of ASHRAE Standards 90.1
Short Circuit Current Rating (SCCR): 5kA rms

A-Weighted Sound Power (dBA)

UNIT SIZE	STANDARD RATING	TYPICAL OCTAVE BAND SPECTRUM (without tone adjustment)						
		125	250	500	1000	2000	4000	8000
18	74	67.1	66.8	69.3	68.2	64.3	59.9	53.1
24	73	69.9	66.6	69.9	70.5	61.8	58.2	51.6
30	71	62.9	64.5	66.7	69.1	61.3	57.4	52.3
36	74	68.8	69.2	70.1	67.3	64.0	60.5	56.0
42	73	73.8	72.9	70.9	69.4	62.9	60.1	54.8
43	70	72.0	66.0	67.0	65.0	62.0	60.0	55.0
48	73	73.8	72.9	70.9	69.4	62.9	60.1	54.8
49	72	63.9	67.0	71.5	66.2	59.8	56.8	52.9
60	72	71.6	71.6	70.2	67.8	62.4	59.2	58.4
61	72	67.5	68.6	68.0	68.7	59.4	55.8	52.0

NOTE: Tested in compliance with AHRI 270 but not listed with AHRI.

Charging Subcooling (TXV-Type Expansion Device)

UNIT SIZE	REQUIRED SUBCOOLING °F (°C)	Indoor
18	8 (4)	TXV
24	8 (4)	
30	10 (6)	
36	8 (4)	
42	10 (6)	
43	12 (7)	
48	10 (6)	
49	8 (4)	
60	14 (8)	
61	9 (5)	

DIMENSIONS

UNIT	SERIES	ELECTRICAL CHARACTERISTICS				A		B		C		D		E		F		G		H		I		J		K		OPERATING WEIGHT		SHIPPING WEIGHT		SHIPPING LENGTH / WIDTH (Sq.)		SHIPPING HEIGHT	
						INCH	MM	INCH	MM	INCH	MM	INCH	MM	INCH	MM	INCH	MM	INCH	MM	INCH	MM	INCH	MM	INCH	MM	INCH	MM	Lbs	Kgs	Lbs	Kgs	INCH	MM	INCH	MM
H4A6S18**AWA	A	Y	N	N	N	31 3/16	792.5	32 1/8	815.6	3/4	19.1	6 9/16	166.1	24 11/16	626.3	9 1/8	231.3	5/16	7.9	3	76.2	15	381.0	14	355.6	15	381.0	154	69.9	174	78.9	34 1/4	870.0	37 3/16	944.9
H4A6S24**AWA	A	Y	N	N	N	31 3/16	792.5	32 1/8	815.6	3/4	19.1	6 9/16	166.1	24 11/16	626.3	9 1/8	231.3	5/16	7.9	3	76.2	15 1/2	393.7	15	381.0	16	406.4	159	72.1	179	81.2	34 1/4	870.0	37 3/16	944.9
H4A6S30**AWA	A	Y	N	N	N	31 3/16	792.5	35 1/2	902.0	3/4	19.1	6 9/16	166.1	24 11/16	626.3	9 1/8	231.3	5/16	7.9	3	76.2	15	381.0	15	381.0	16 1/2	419.1	164	74.4	182	82.6	34 1/4	870.0	40 5/8	1031.3
H4A6S36**AWA	A	Y	N	N	N	31 3/16	792.5	38 15/16	988.4	7/8	22.2	6 9/16	166.1	24 11/16	626.3	9 1/8	231.3	5/16	7.9	3	76.2	16	406.4	15	381.0	18 1/2	469.9	176	79.8	197	89.4	34 1/4	870.0	44	1117.6
H4A6S42**AWA	A	Y	N	N	N	31 3/16	792.5	32 1/8	815.6	7/8	22.2	6 9/16	166.1	24 11/16	626.3	9 1/8	231.3	5/16	7.9	3	76.2	15	381.0	15	381.0	13 1/2	342.9	204	92.5	225	102.1	34 1/4	870.0	37 3/16	944.9
H4A6S43**AWA	A	Y	N	N	N	35	889.0	40 3/8	1026.3	7/8	22.2	6 9/16	166.1	28 7/16	722.8	9 1/8	231.3	5/16	7.9	3	76.2	17 1/2	444.5	16 1/4	412.8	18	457.2	295	133.8	317	143.8	37 13/16	960.0	45 3/16	1147.4
H4A6S48**AWA	A	Y	N	N	N	31 3/16	792.5	32 1/8	815.6	7/8	22.2	6 9/16	166.1	24 11/16	626.3	9 1/8	231.3	5/16	7.9	3	76.2	15	381.0	15	381.0	13 1/2	342.9	204	92.5	225	102.1	34 1/4	870.0	37 3/16	944.9
H4A6S49**AWA	A	Y	N	N	N	35	889.0	47 3/16	1199.0	7/8	22.2	6 9/16	166.1	28 7/16	722.8	9 1/8	231.3	5/16	7.9	3	76.2	18	457.2	18	457.2	19 1/2	495.3	276	125.2	300	136.1	37 13/16	960.0	52	1320.1
H4A6S60**AWA	A	Y	N	N	N	31 3/16	792.5	38 15/16	988.4	7/8	22.2	6 9/16	166.1	24 11/16	626.3	9 1/8	231.3	5/16	7.9	3	76.2	15	381.0	15 1/2	393.7	20	508.0	221	100.2	242	109.8	34 1/4	870.0	44	1117.6
H4A6S61**AWA	A	Y	N	N	N	35	889.0	47 3/16	1199.0	7/8	22.2	6 9/16	166.1	28 7/16	722.8	9 1/8	231.3	5/16	7.9	3	76.2	17 1/2	444.5	16 1/2	419.1	24	609.6	280	127.0	304	137.9	37 13/16	960.0	52	1320.1
		208-230-1-60	208/230-3-60	460-3-60	575-3-60	Y=YES N=NO																													

NOTES:

1. CENTER OF GRAVITY .

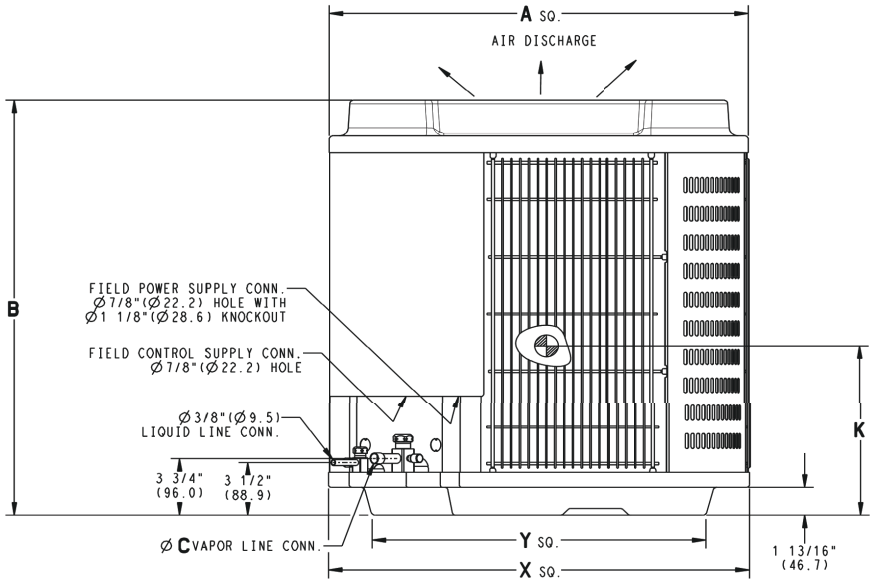

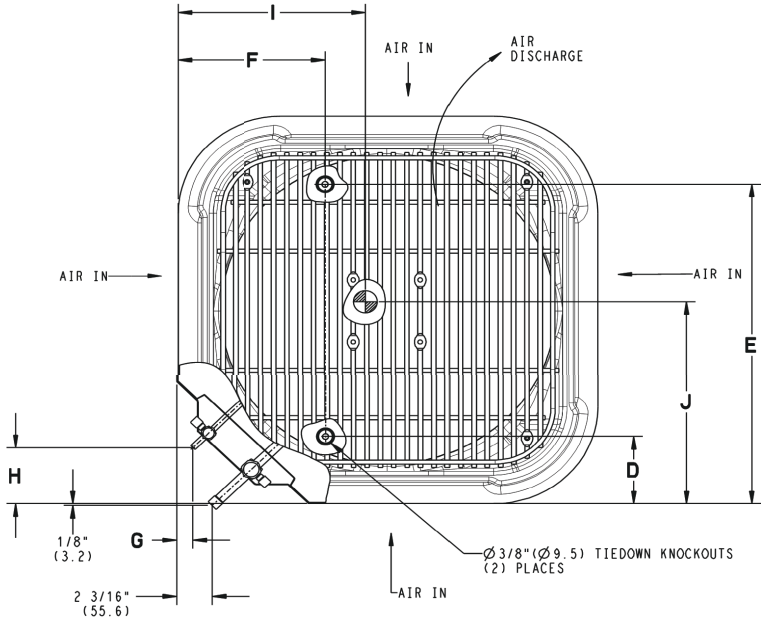

UNIT SIZE	"X" MINIMUM GROUND MOUNTING PAD APPLICATION DIMENSIONS		"Y" MINIMUM ROOF-TOP MOUNTING PAD APPLICATION DIMENSIONS	
-	23 1/8	587.3	17 7/8	454.6
-	25 3/4	654.0	20 7/16	518.5
18,24,30,36,42,48,60	31 3/16	792.5	22 15/16	583.2
43,49,61	35	889.0	26 3/4	679.7

NOTE: ALL DIMENSIONS IN INCH (MM)

U.S. ECCN: Not Subject to Regulation (N.S.R.)

SD5706-4 (1) REV. D

Manufacturer reserves the right to change, at any time, specifications and designs without notice and without obligations.

CLEARANCES

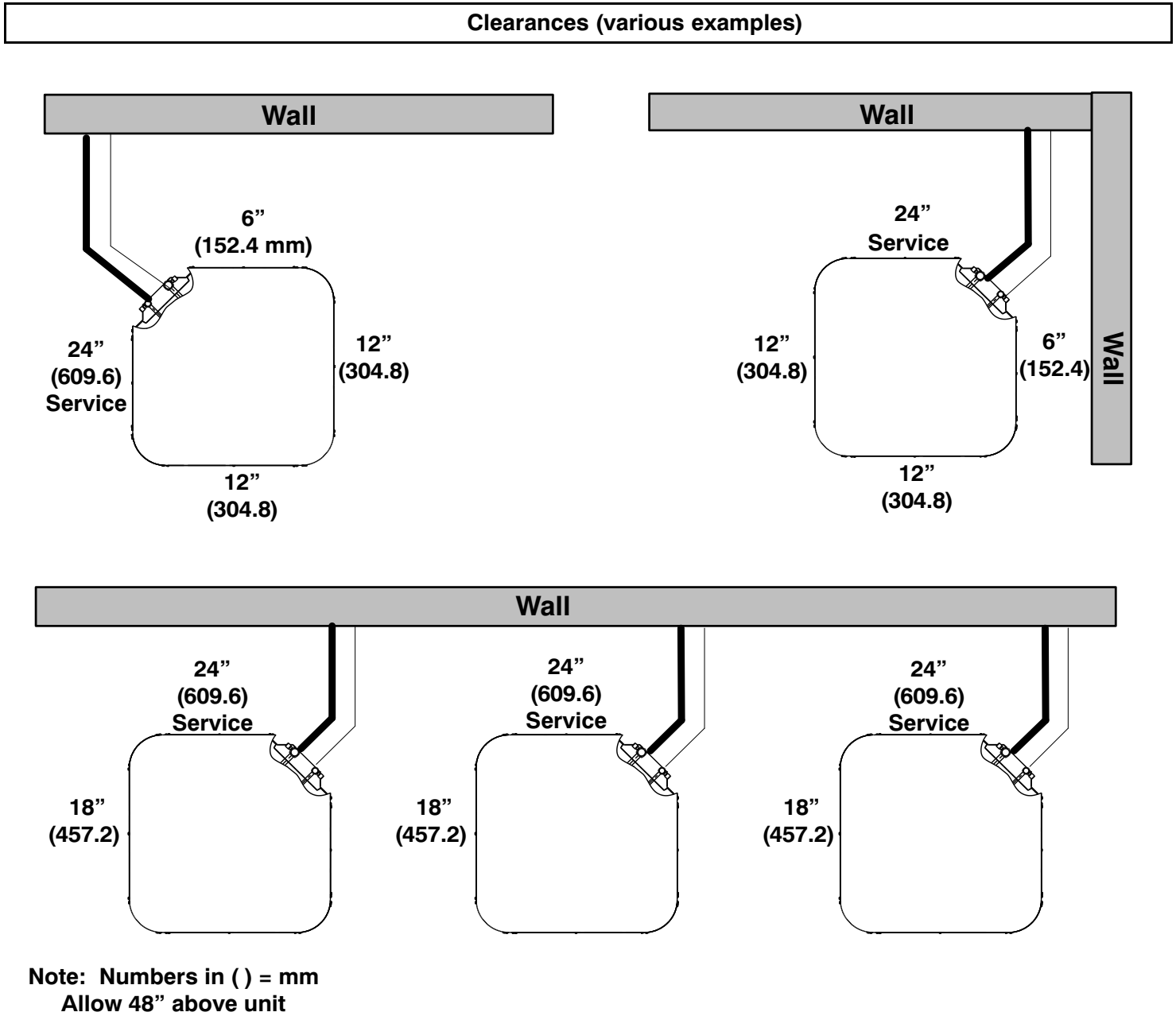

Note: Numbers in ( ) = mm
Allow 48” above unit

IMPORTANT: When installing multiple units in an alcove, roof well, or partially enclosed area, ensure there is adequate ventilation to prevent re-circulation of discharge air.

DETAILED COOLING CAPACITIES#

EVAPORATOR AIR		CONDENSER ENTERING AIR TEMPERATURES °F (°C)																	
		75 (23.9)			85 (29.4)			95 (35)			105 (40.6)			115 (46.1)			125 (51.7)		
CFM	EWB	Capacity MBtuh		Total Sys. kW**	Capacity MBtuh		Total Sys. kW**	Capacity MBtuh		Total Sys. kW**	Capacity MBtuh		Total Sys. kW**	Capacity MBtuh		Total Sys. kW**	Capacity MBtuh		Total Sys. kW**
		Total	Sens‡		Total	Sens‡		Total	Sens‡		Total	Sens‡		Total	Sens‡		Total	Sens‡	
H4A6S18*K*WAA* Outdoor Section With ESD4X24M14A* Indoor Section																			
525	72 (22.2)	21.27	10.54	1.11	20.26	10.21	1.24	19.26	9.83	1.39	18.26	9.39	1.55	17.06	9.00	1.74	15.81	8.52	1.96
	67 (19.4)	19.22	12.74	1.12	18.38	12.42	1.25	17.49	12.04	1.40	16.60	11.61	1.56	15.50	11.12	1.75	14.33	10.69	1.96
	63 (17.2)††	17.81	12.28	1.13	16.96	11.91	1.26	16.06	11.45	1.40	15.25	11.07	1.57	14.28	10.62	1.75	13.17	10.12	1.97
	62 (16.7)	17.44	14.86	1.13	16.66	14.55	1.26	15.86	14.15	1.40	14.90	13.68	1.56	14.00	13.28	1.76	13.23	13.23	1.97
	57 (13.9)	17.14	17.14	1.14	16.21	16.21	1.26	15.57	15.57	1.40	14.88	14.88	1.57	14.03	14.03	1.76	13.10	13.10	1.96
610	72 (22.2)	21.80	11.01	1.15	20.72	10.62	1.28	19.69	10.23	1.42	18.60	9.88	1.59	17.38	9.43	1.78	16.09	8.94	2.00
	67 (19.4)	19.72	13.50	1.16	18.85	13.19	1.29	17.90	12.77	1.43	16.88	12.35	1.60	15.81	11.85	1.78	14.58	11.40	2.00
	63 (17.2)††	18.26	12.97	1.17	17.39	12.61	1.30	16.43	12.13	1.44	15.55	11.77	1.60	14.52	11.25	1.79	13.39	10.80	2.01
	62 (16.7)	17.96	15.99	1.17	17.10	15.63	1.30	16.15	15.11	1.44	15.17	15.10	1.60	14.72	14.71	1.79	13.74	13.74	2.00
	57 (13.9)	17.79	17.79	1.17	16.99	16.99	1.30	16.21	16.21	1.44	15.40	15.40	1.60	14.65	14.65	1.79	13.77	13.77	2.00
675	72 (22.2)	22.13	11.35	1.17	21.05	11.00	1.30	19.98	10.60	1.45	18.88	10.14	1.62	17.57	9.72	1.80	16.24	9.22	2.02
	67 (19.4)	20.02	14.02	1.19	19.12	13.72	1.31	18.14	13.30	1.46	17.11	12.84	1.63	15.99	12.38	1.81	14.71	11.83	2.03
	63 (17.2)††	18.52	13.46	1.20	17.63	13.10	1.32	16.71	12.67	1.47	15.73	12.20	1.63	14.67	11.76	1.82	13.51	11.27	2.04
	62 (16.7)	18.26	16.81	1.20	17.34	16.39	1.33	16.39	16.39	1.47	15.95	15.95	1.63	15.02	15.02	1.82	13.99	13.99	2.03
	57 (13.9)	18.31	18.31	1.20	17.48	17.48	1.32	16.70	16.70	1.47	15.87	15.87	1.63	15.00	15.00	1.81	14.02	14.01	2.03
H4A6S24*K*WAA* Outdoor Section With ESD4X24M14A* Indoor Section																			
700	72 (22.2)	28.29	13.93	1.50	26.83	13.50	1.67	25.48	12.99	1.87	24.11	12.32	2.08	22.52	11.86	2.33	20.89	11.22	2.61
	67 (19.4)	25.78	16.87	1.52	24.67	16.40	1.69	23.40	15.85	1.87	22.07	15.29	2.08	20.65	14.68	2.33	19.11	14.13	2.61
	63 (17.2)††	23.85	16.26	1.53	22.78	15.85	1.69	21.62	15.31	1.87	20.34	14.76	2.08	19.12	14.08	2.32	17.69	13.51	2.60
	62 (16.7)	23.50	19.78	1.53	22.35	19.32	1.69	21.34	18.88	1.88	20.11	18.14	2.08	18.74	17.58	2.32	17.32	17.32	2.60
	57 (13.9)	22.77	22.77	1.54	21.73	21.72	1.69	20.80	20.80	1.87	19.86	19.86	2.08	18.77	18.77	2.33	17.69	17.69	2.61
800	72 (22.2)	28.70	14.52	1.54	27.35	14.01	1.72	26.14	13.38	1.91	24.56	12.79	2.13	22.94	12.22	2.38	21.17	11.67	2.66
	67 (19.4)	26.31	17.71	1.56	25.02	17.30	1.73	23.82	16.64	1.92	22.46	16.07	2.13	20.95	15.45	2.38	19.33	14.89	2.65
	63 (17.2)††	24.47	17.05	1.57	23.31	16.55	1.74	22.00	16.06	1.92	20.80	15.42	2.13	19.40	14.87	2.38	17.92	14.21	2.65
	62 (16.7)	24.02	20.98	1.57	22.82	20.48	1.74	21.63	19.92	1.92	20.42	19.29	2.13	19.06	19.06	2.37	18.24	18.24	2.65
	57 (13.9)	23.37	23.37	1.58	22.56	22.56	1.74	21.58	21.58	1.92	20.58	20.58	2.13	19.45	19.44	2.38	18.22	18.22	2.65
900	72 (22.2)	29.02	14.94	1.58	27.76	14.45	1.76	26.46	13.81	1.96	24.79	13.20	2.18	23.20	12.62	2.43	21.38	11.98	2.71
	67 (19.4)	26.75	18.46	1.60	25.49	17.95	1.77	24.15	17.40	1.96	22.72	16.80	2.18	21.17	16.17	2.42	19.53	15.51	2.70
	63 (17.2)††	24.74	17.79	1.62	23.63	17.30	1.78	22.36	16.74	1.97	21.06	16.09	2.18	19.58	15.40	2.41	18.10	14.79	2.70
	62 (16.7)	24.41	22.05	1.62	23.24	21.50	1.78	22.21	20.48	1.97	21.19	21.19	2.18	19.96	19.96	2.42	18.63	18.63	2.69
	57 (13.9)	24.17	24.17	1.62	23.13	23.13	1.78	22.32	22.32	1.97	21.16	21.16	2.18	19.94	19.94	2.43	18.64	18.64	2.70
H4A6S30*K*WAA* Outdoor Section With EVD4X30M17A* Indoor Section																			
875	72 (22.2)	34.76	16.74	1.98	32.77	16.17	2.19	30.95	15.49	2.42	29.32	14.83	2.70	27.38	14.05	3.00	25.34	13.44	3.36
	67 (19.4)	31.61	20.37	1.97	29.89	19.61	2.17	28.37	19.09	2.41	26.81	18.36	2.67	25.00	17.57	2.97	23.16	16.94	3.34
	63 (17.2)††	29.29	19.65	1.96	27.62	18.98	2.16	26.31	18.37	2.39	24.85	17.66	2.66	23.15	16.86	2.95	21.49	16.12	3.31
	62 (16.7)	28.84	23.81	1.96	27.16	23.16	2.16	25.90	22.56	2.39	24.41	21.83	2.65	22.76	21.00	2.95	21.53	21.53	3.31
	57 (13.9)	27.77	27.77	1.96	26.46	26.46	2.16	25.43	25.43	2.39	24.24	24.24	2.65	22.79	22.78	2.96	21.42	21.42	3.31
990	72 (22.2)	35.51	17.32	2.04	33.61	16.71	2.25	31.63	15.97	2.48	29.74	15.38	2.76	27.77	14.57	3.06	25.70	13.83	3.42
	67 (19.4)	32.26	21.30	2.03	30.43	20.51	2.23	28.80	19.98	2.46	27.22	19.25	2.73	25.37	18.43	3.03	23.51	17.69	3.40
	63 (17.2)††	29.98	20.55	2.02	28.11	19.83	2.22	26.76	19.21	2.45	25.25	18.49	2.71	23.50	17.66	3.01	21.75	16.90	3.37
	62 (16.7)	29.46	25.16	2.02	27.65	24.47	2.22	26.32	23.84	2.45	24.80	23.13	2.71	23.60	23.60	3.01	22.06	22.06	3.38
	57 (13.9)	28.86	28.86	2.02	27.37	27.37	2.21	26.29	26.28	2.45	25.04	25.04	2.71	23.48	23.48	3.02	22.10	22.10	3.37
1125	72 (22.2)	35.99	17.93	2.10	34.08	17.27	2.32	32.09	16.50	2.55	30.17	15.86	2.82	28.10	15.11	3.13	25.97	14.36	3.49
	67 (19.4)	32.82	22.27	2.09	31.09	21.74	2.30	29.23	20.99	2.53	27.56	20.25	2.79	25.65	19.37	3.10	23.65	18.57	3.45
	63 (17.2)††	30.52	21.46	2.08	28.72	20.67	2.29	27.15	20.12	2.51	25.58	19.39	2.78	23.77	18.53	3.08	21.95	17.75	3.44
	62 (16.7)	29.97	26.60	2.08	28.23	25.77	2.28	26.65	25.40	2.51	25.81	25.81	2.78	24.16	24.15	3.09	22.68	22.68	3.44
	57 (13.9)	29.84	29.84	2.08	28.35	28.35	2.28	27.09	27.09	2.52	25.78	25.78	2.78	24.14	24.14	3.09	22.41	22.41	3.43

Manufacturer reserves the right to change, at any time, specifications and designs without notice and without obligations.

DETAILED COOLING CAPACITIES# (Continued)

EVAPORATOR AIR		CONDENSER ENTERING AIR TEMPERATURES °F (°C)																	
		75 (23.9)			85 (29.4)			95 (35)			105 (40.6)			115 (46.1)			125 (51.7)		
CFM	EWB	Capacity MBtuh		Total Sys. kW**	Capacity MBtuh		Total Sys. kW**	Capacity MBtuh		Total Sys. kW**	Capacity MBtuh		Total Sys. kW**	Capacity MBtuh		Total Sys. kW**	Capacity MBtuh		Total Sys. kW**
		Total	Sens‡		Total	Sens‡		Total	Sens‡		Total	Sens‡		Total	Sens‡		Total	Sens‡	
H4A6S36*K*WAA* Outdoor Section With EVD4X37M21A* Indoor Section																			
1050	72 (22.2)	40.80	19.67	2.33	38.77	19.12	2.58	36.76	18.39	2.85	34.74	17.49	3.15	32.37	16.64	3.51	29.86	15.74	3.92
	67 (19.4)	37.10	24.07	2.34	35.57	23.40	2.60	33.72	22.64	2.87	31.71	21.81	3.17	29.58	20.95	3.52	27.26	20.02	3.93
	63 (17.2)††	34.33	23.13	2.35	32.75	22.59	2.60	31.24	21.87	2.87	29.40	20.96	3.17	27.47	20.13	3.52	25.29	19.19	3.93
	62 (16.7)	33.82	28.48	2.35	32.19	27.68	2.60	30.66	26.86	2.87	28.91	26.07	3.17	28.63	23.07	3.52	25.57	25.57	3.92
	57 (13.9)	32.88	32.88	2.35	31.55	31.55	2.61	30.35	30.35	2.88	28.92	28.92	3.17	27.25	27.25	3.53	25.50	25.50	3.93
1175	72 (22.2)	41.48	20.31	2.39	39.51	19.64	2.64	37.41	18.87	2.91	35.21	18.07	3.21	32.86	17.37	3.56	30.11	16.28	3.97
	67 (19.4)	37.78	25.05	2.40	36.05	24.38	2.65	34.20	23.63	2.92	32.17	22.81	3.22	29.88	21.89	3.57	27.51	20.95	3.98
	63 (17.2)††	34.97	24.09	2.40	33.30	23.54	2.66	31.58	22.78	2.93	29.84	21.98	3.23	27.79	21.02	3.58	25.55	20.05	3.98
	62 (16.7)	34.41	29.88	2.41	32.71	29.09	2.66	31.07	28.26	2.93	29.81	29.80	3.23	28.13	28.13	3.58	26.15	26.15	3.99
	57 (13.9)	33.88	33.88	2.41	32.53	32.53	2.66	31.25	31.25	2.93	29.73	29.73	3.23	28.06	28.06	3.58	26.12	26.12	3.99
1350	72 (22.2)	42.22	21.12	2.47	40.15	20.42	2.72	38.02	19.64	2.99	35.69	18.80	3.29	33.09	17.90	3.64	30.36	16.98	4.05
	67 (19.4)	38.45	26.31	2.48	36.67	25.70	2.73	34.71	24.96	3.00	32.51	24.04	3.30	30.29	23.17	3.65	27.74	22.17	4.06
	63 (17.2)††	35.66	25.36	2.49	34.00	24.68	2.74	32.19	23.91	3.01	30.22	23.03	3.31	28.09	22.16	3.66	25.76	21.17	4.07
	62 (16.7)	35.06	31.68	2.49	33.35	30.89	2.74	32.75	30.22	3.01	30.62	30.62	3.31	28.89	28.89	3.66	26.76	26.76	4.06
	57 (13.9)	35.13	35.13	2.48	33.67	33.67	2.74	32.29	32.29	3.01	30.56	30.56	3.32	28.84	28.84	3.66	26.79	26.79	4.06
H4A6S42*K*WAA* Outdoor Section With EVD4X48M21A* Indoor Section																			
1225	72.0 (22.2)	52.90	26.93	3.25	50.65	25.98	3.57	48.20	24.96	3.93	45.60	23.90	4.35	42.71	22.74	4.81	39.54	21.47	5.33
	67.0 (19.4)	47.91	32.34	3.23	46.02	31.37	3.55	43.86	30.35	3.91	41.51	29.24	4.33	38.85	28.10	4.79	36.05	26.72	5.31
	63.0 (17.2)††	44.43	31.26	3.22	42.58	30.32	3.54	40.61	29.29	3.90	38.44	28.20	4.31	35.89	27.06	4.78	33.39	25.70	5.30
	62.0 (16.7)	43.63	37.40	3.22	41.81	36.44	3.54	39.87	35.40	3.90	37.73	34.30	4.31	35.37	33.08	4.77	32.77	31.77	5.29
	57.0 (13.9)	41.31	41.31	3.21	39.86	39.86	3.53	38.36	38.36	3.89	36.64	36.64	4.30	34.77	34.77	4.77	32.67	32.67	5.29
1435	72.0 (22.2)	54.39	28.09	3.35	51.98	27.13	3.67	49.42	26.11	4.04	46.63	24.99	4.45	43.59	23.77	4.92	40.28	22.49	5.44
	67.0 (19.4)	49.47	34.15	3.33	47.31	33.16	3.65	45.00	32.10	4.02	42.49	30.94	4.43	39.73	29.69	4.90	36.72	28.34	5.42
	63.0 (17.2)††	45.68	32.91	3.33	43.80	32.00	3.64	41.67	30.92	4.00	39.37	29.80	4.41	36.83	28.54	4.88	34.00	27.18	5.40
	62.0 (16.7)	44.93	39.90	3.32	42.99	38.89	3.64	40.90	37.83	4.00	38.62	36.66	4.41	36.13	35.42	4.88	34.00	34.00	5.40
	57.0 (13.9)	43.32	43.32	3.32	41.78	41.78	3.64	40.11	40.11	4.00	38.29	38.29	4.41	36.25	36.25	4.88	33.97	33.97	5.40
1575	72.0 (22.2)	55.18	28.83	3.42	52.71	27.82	3.74	50.03	26.77	4.10	47.16	25.62	4.52	44.02	24.39	4.99	40.63	23.07	5.50
	67.0 (19.4)	50.22	35.30	3.40	47.98	34.26	3.72	45.59	33.16	4.09	42.99	31.98	4.50	39.98	30.59	4.97	37.04	29.33	5.48
	63.0 (17.2)††	46.51	34.01	3.39	44.43	33.01	3.71	42.23	31.93	4.07	39.84	30.76	4.48	37.21	29.48	4.95	34.33	28.11	5.47
	62.0 (16.7)	45.62	41.44	3.39	43.59	40.42	3.71	41.43	39.31	4.07	39.08	38.16	4.48	36.51	36.89	4.94	34.71	34.71	5.47
	57.0 (13.9)	44.47	44.47	3.38	42.71	42.71	3.70	41.11	41.11	4.07	39.20	39.20	4.48	37.06	37.06	4.95	34.67	34.67	5.47
H4A6S43*K*WAA* Outdoor Section With EVD4X48M21A* Indoor Section																			
1225	72 (22.2)	48.56	25.46	2.69	46.32	24.64	2.96	43.94	23.77	3.27	41.41	22.87	3.62	38.69	21.91	4.01	35.81	20.91	4.44
	67 (19.4)	44.05	31.34	2.68	42.05	30.53	2.96	39.91	29.67	3.26	37.65	28.77	3.61	35.20	27.81	4.00	32.59	26.79	4.43
	63 (17.2)††	40.83	30.10	2.68	38.99	29.30	2.95	37.02	28.45	3.26	34.93	27.56	3.60	32.69	26.61	3.99	30.28	25.60	4.42
	62 (16.7)	40.17	37.10	2.68	38.40	36.26	2.95	36.55	35.32	3.26	34.91	33.61	3.60	32.91	32.91	3.99	30.91	30.91	4.42
	57 (13.9)	39.31	39.31	2.67	37.88	37.88	2.95	36.35	36.35	3.25	34.68	34.68	3.60	32.86	32.86	3.99	30.87	30.87	4.42
1400	72 (22.2)	49.39	26.84	2.76	47.05	26.01	3.04	44.56	25.13	3.35	41.92	24.20	3.69	39.11	23.23	4.08	36.12	22.21	4.51
	67 (19.4)	44.87	33.55	2.75	42.76	32.72	3.03	40.54	31.84	3.34	38.18	30.92	3.68	35.65	29.93	4.07	32.97	28.89	4.50
	63 (17.2)††	41.60	32.16	2.75	39.67	31.33	3.02	37.63	30.47	3.33	35.45	29.55	3.67	33.13	28.57	4.06	30.65	27.52	4.49
	62 (16.7)	41.21	40.88	2.75	39.55	39.55	3.02	37.88	37.88	3.33	36.08	36.08	3.68	34.11	34.11	4.06	31.97	31.97	4.50
	57 (13.9)	41.04	41.04	2.75	39.49	39.49	3.02	37.83	37.83	3.33	36.03	36.03	3.68	34.06	34.06	4.06	31.93	31.93	4.50
1575	72 (22.2)	49.99	28.17	2.83	47.56	27.32	3.11	44.99	26.43	3.42	42.27	25.49	3.76	39.37	24.51	4.15	36.31	23.48	4.58
	67 (19.4)	45.46	35.68	2.82	43.29	34.83	3.10	40.99	33.92	3.41	38.57	32.98	3.75	35.98	31.96	4.14	33.24	30.85	4.57
	63 (17.2)††	42.18	34.13	2.82	40.19	33.28	3.09	38.07	32.39	3.40	35.84	31.44	3.74	33.46	30.42	4.13	30.94	29.30	4.56
	62 (16.7)	42.50	42.50	2.82	40.83	40.83	3.09	39.05	39.05	3.40	37.14	37.14	3.75	35.04	35.04	4.14	32.78	32.78	4.57
	57 (13.9)	42.43	42.43	2.82	40.77	40.77	3.09	39.00	39.00	3.40	37.09	37.09	3.75	35.00	35.00	4.14	32.75	32.75	4.57

DETAILED COOLING CAPACITIES# (Continued)

EVAPORATOR AIR		CONDENSER ENTERING AIR TEMPERATURES °F (°C)																	
		75 (23.9)			85 (29.4)			95 (35)			105 (40.6)			115 (46.1)			125 (51.7)		
CFM	EWB	Capacity MBtuh		Total Sys. kW**	Capacity MBtuh		Total Sys. kW**	Capacity MBtuh		Total Sys. kW**	Capacity MBtuh		Total Sys. kW**	Capacity MBtuh		Total Sys. kW**	Capacity MBtuh		Total Sys. kW**
		Total	Sens‡		Total	Sens‡		Total	Sens‡		Total	Sens‡		Total	Sens‡		Total	Sens‡	
H4A6S48*K*WAA* Outdoor Section With EVD4X48M21A* Indoor Section																			
1435	72 (22.2)	56.17	27.88	3.46	53.06	26.59	3.79	51.03	25.80	4.17	48.19	24.67	4.60	44.96	23.47	5.08	41.55	22.23	5.62
	67 (19.4)	50.82	33.77	3.45	48.68	32.66	3.78	46.50	31.71	4.15	43.79	30.53	4.58	41.00	29.35	5.06	37.89	28.01	5.60
	63 (17.2)††	47.21	32.61	3.43	44.75	31.36	3.76	42.88	30.50	4.13	40.60	29.44	4.56	38.00	28.22	5.04	35.09	26.88	5.58
	62 (16.7)	46.39	39.50	3.43	44.28	38.34	3.76	42.08	37.32	4.13	39.88	36.26	4.56	37.31	35.03	5.04	35.06	35.06	5.58
	57 (13.9)	44.53	44.52	3.43	42.81	42.81	3.75	41.46	41.46	4.13	39.31	39.31	4.55	37.35	37.35	5.04	34.93	34.93	5.58
1600	72 (22.2)	56.74	28.76	3.54	54.58	27.61	3.88	51.76	26.58	4.25	48.77	25.44	4.68	45.53	24.20	5.16	41.97	22.92	5.70
	67 (19.4)	51.72	35.04	3.53	49.46	33.89	3.86	47.20	32.92	4.23	44.31	31.69	4.66	41.49	30.55	5.14	38.27	29.17	5.68
	63 (17.2)††	48.11	33.82	3.52	45.85	32.70	3.84	43.31	31.52	4.21	41.18	30.58	4.64	38.23	29.22	5.12	35.48	27.97	5.66
	62 (16.7)	47.25	41.26	3.51	44.64	39.97	3.84	42.68	39.06	4.21	40.43	37.98	4.64	38.31	37.74	5.12	35.94	35.92	5.67
	57 (13.9)	45.94	45.94	3.51	43.96	43.96	3.83	42.29	42.29	4.21	40.39	40.39	4.64	38.32	38.32	5.13	35.75	35.74	5.66
1800	72 (22.2)	58.10	29.60	3.64	55.44	28.51	3.98	52.47	27.46	4.35	49.38	26.30	4.78	45.99	25.02	5.26	42.34	23.72	5.80
	67 (19.4)	52.74	36.52	3.63	50.45	35.49	3.96	47.85	34.35	4.33	44.82	33.05	4.75	41.94	31.93	5.24	38.60	30.52	5.78
	63 (17.2)††	48.94	35.19	3.61	46.74	34.16	3.94	43.72	32.72	4.31	41.73	31.90	4.74	38.90	30.62	5.22	35.80	29.22	5.76
	62 (16.7)	48.07	43.35	3.61	45.68	42.15	3.94	44.31	37.24	4.32	41.78	41.78	4.74	39.47	39.19	5.23	36.65	36.65	5.77
	57 (13.9)	47.33	47.33	3.61	45.58	45.58	3.94	43.41	43.41	4.31	41.52	41.52	4.74	39.30	39.30	5.23	36.61	36.61	5.77
H4A6S49*K*WAA* Outdoor Section With EA*4X60L24A* Indoor Section																			
1410	72.0 (22.2)	55.67	28.40	3.17	53.33	27.55	3.48	50.86	26.68	3.85	48.24	25.75	4.26	45.42	24.79	4.74	42.40	23.73	5.27
	67.0 (19.4)	50.38	34.86	3.17	48.24	34.01	3.48	46.00	33.13	3.83	43.61	32.20	4.25	41.04	31.21	4.72	38.26	30.14	5.24
	63.0 (17.2)††	46.63	33.46	3.17	44.64	32.61	3.47	42.55	31.73	3.82	40.33	30.80	4.23	37.92	29.80	4.70	35.33	28.72	5.23
	62.0 (16.7)	46.02	41.24	3.17	44.12	40.35	3.47	42.16	39.38	3.82	40.12	40.12	4.23	38.20	38.20	4.70	36.07	36.07	5.23
	57.0 (13.9)	45.05	45.05	3.17	43.50	43.50	3.47	41.85	41.85	3.82	40.08	40.08	4.23	38.14	38.14	4.70	36.02	36.02	5.23
1600	72.0 (22.2)	56.59	29.77	3.26	54.15	28.91	3.57	51.58	28.02	3.94	48.86	27.08	4.36	45.97	26.10	4.83	42.82	25.03	5.36
	67.0 (19.4)	51.23	37.05	3.26	49.00	36.19	3.57	46.67	35.29	3.92	44.20	34.33	4.34	41.55	33.31	4.81	38.71	32.22	5.34
	63.0 (17.2)††	47.42	35.49	3.26	45.36	34.63	3.56	43.19	33.72	3.92	40.99	32.76	4.33	38.41	31.74	4.79	35.73	30.61	5.32
	62.0 (16.7)	47.09	44.07	3.26	45.35	42.74	3.56	43.44	43.44	3.92	41.54	41.54	4.33	39.49	39.49	4.80	37.23	37.23	5.33
	57.0 (13.9)	46.80	46.80	3.26	45.14	45.14	3.56	43.37	43.37	3.92	41.48	41.48	4.33	39.43	39.43	4.80	37.18	37.18	5.33
1800	72.0 (22.2)	57.30	31.14	3.35	54.77	30.27	3.67	52.12	29.37	4.03	49.32	28.42	4.45	46.34	27.41	4.93	43.10	26.34	5.46
	67.0 (19.4)	51.89	39.26	3.35	49.60	38.37	3.66	47.19	37.44	4.02	44.69	36.48	4.44	41.98	35.43	4.91	39.08	34.28	5.44
	63.0 (17.2)††	48.05	37.53	3.35	45.92	36.64	3.66	43.69	35.71	4.01	41.33	34.72	4.42	38.80	33.65	4.89	36.10	32.49	5.42
	62.0 (16.7)	48.38	48.38	3.35	46.61	46.61	3.66	44.75	44.75	4.01	42.75	42.75	4.43	40.58	40.58	4.90	38.21	38.21	5.43
	57.0 (13.9)	48.31	48.31	3.35	46.55	46.55	3.66	44.69	44.69	4.01	42.70	42.70	4.43	40.53	40.53	4.90	38.16	38.16	5.43
H4A6S60*K*WAA* Outdoor Section With EVD4X61M24A* Indoor Section																			
1765	72 (22.2)	68.32	33.70	4.22	65.36	32.54	4.62	62.00	31.31	5.08	58.66	30.05	5.60	54.86	28.70	6.20	50.75	27.23	6.86
	67 (19.4)	62.01	41.32	4.20	59.07	40.36	4.59	56.50	38.85	5.04	53.37	37.53	5.57	49.89	36.04	6.16	46.16	34.58	6.82
	63 (17.2)††	57.40	39.80	4.18	54.38	38.69	4.56	51.79	37.47	5.01	49.30	36.03	5.53	46.18	34.65	6.12	42.69	33.10	6.79
	62 (16.7)	56.24	48.57	4.18	53.56	47.44	4.56	50.87	46.18	5.00	48.29	44.74	5.53	46.44	44.13	6.13	43.08	43.08	6.79
	57 (13.9)	54.82	54.82	4.17	52.62	52.62	4.55	50.48	50.47	5.00	48.15	48.14	5.53	45.69	45.69	6.12	42.84	42.84	6.79
2000	72 (22.2)	69.65	34.98	4.33	66.51	33.83	4.73	63.25	32.56	5.20	59.62	31.27	5.72	55.67	29.85	6.32	51.42	28.33	6.98
	67 (19.4)	63.30	43.23	4.32	60.49	42.09	4.71	57.43	40.74	5.17	54.11	39.44	5.69	50.54	37.98	6.28	46.70	36.38	6.94
	63 (17.2)††	58.59	41.65	4.30	55.93	40.46	4.69	53.04	39.11	5.14	50.00	37.76	5.65	46.77	36.36	6.25	43.18	34.79	6.91
	62 (16.7)	57.56	51.23	4.30	54.86	50.08	4.68	52.11	49.07	5.13	50.02	45.77	5.66	47.28	47.28	6.26	44.25	44.25	6.92
	57 (13.9)	56.82	56.82	4.29	54.73	54.73	4.68	52.25	52.25	5.13	49.52	49.52	5.65	47.12	47.12	6.25	44.23	44.23	6.92
2250	72 (22.2)	70.90	36.21	4.46	67.56	35.02	4.86	64.07	33.76	5.32	60.32	32.38	5.85	56.25	30.97	6.44	51.83	29.40	7.10
	67 (19.4)	64.31	45.21	4.44	61.36	44.04	4.84	58.18	42.68	5.29	54.74	41.32	5.82	51.04	39.82	6.41	47.05	38.25	7.07
	63 (17.2)††	59.47	43.38	4.43	56.79	42.26	4.81	53.85	40.90	5.27	50.52	39.45	5.78	47.26	38.05	6.37	43.52	36.46	7.03
	62 (16.7)	58.28	54.13	4.42	56.78	52.87	4.82	54.15	54.15	5.27	51.34	51.34	5.79	48.49	48.49	6.39	45.47	45.47	7.05
	57 (13.9)	58.56	58.56	4.42	56.16	56.15	4.81	53.89	53.89	5.27	51.28	51.28	5.79	48.47	48.47	6.39	45.32	45.32	7.06

Manufacturer reserves the right to change, at any time, specifications and designs without notice and without obligations.

DETAILED COOLING CAPACITIES# (Continued)

EVAPORATOR AIR		CONDENSER ENTERING AIR TEMPERATURES °F (°C)																	
		75 (23.9)			85 (29.4)			95 (35)			105 (40.6)			115 (46.1)			125 (51.7)		
CFM	EWB	Capacity MBtuh		Total Sys. kW**	Capacity MBtuh		Total Sys. kW**	Capacity MBtuh		Total Sys. kW**	Capacity MBtuh		Total Sys. kW**	Capacity MBtuh		Total Sys. kW**	Capacity MBtuh		Total Sys. kW**
		Total	Sens‡		Total	Sens‡		Total	Sens‡		Total	Sens‡		Total	Sens‡		Total	Sens‡	
H4A6S61*K*WAA* Outdoor Section With EVD4X61M24A* Indoor Section																			
1800	72 (22.2)	67.32	34.67	3.83	64.20	33.48	4.22	60.99	32.28	4.66	57.90	31.00	5.15	54.34	29.68	5.72	50.64	28.27	6.35
	67 (19.4)	60.90	42.50	3.80	58.64	41.14	4.19	55.50	40.08	4.62	52.42	38.75	5.12	49.21	37.39	5.68	45.62	35.84	6.32
	63 (17.2)††	56.36	40.94	3.78	54.06	39.62	4.17	51.28	38.52	4.59	48.35	37.20	5.09	45.29	35.88	5.65	42.13	34.30	6.28
	62 (16.7)	55.24	50.04	3.78	52.84	48.82	4.16	50.32	47.80	4.59	47.69	46.92	5.08	45.54	45.54	5.65	42.78	42.78	6.29
	57 (13.9)	54.18	54.18	3.78	52.35	52.35	4.16	50.05	50.05	4.59	47.86	47.86	5.08	45.41	45.41	5.65	42.67	42.67	6.29
2000	72 (22.2)	68.30	35.79	3.93	65.12	34.59	4.31	61.99	33.35	4.75	58.61	32.05	5.25	55.02	30.70	5.82	51.12	29.27	6.45
	67 (19.4)	61.98	44.30	3.90	59.29	43.17	4.28	56.24	41.80	4.72	53.07	40.45	5.21	49.71	39.07	5.77	46.11	37.51	6.41
	63 (17.2)††	57.27	42.55	3.88	54.74	41.37	4.26	51.98	40.09	4.69	48.88	38.72	5.18	45.89	37.29	5.74	42.54	35.82	6.37
	62 (16.7)	56.17	52.45	3.88	53.64	51.38	4.25	51.47	51.12	4.69	49.23	49.23	5.19	46.64	46.64	5.76	43.88	43.88	6.39
	57 (13.9)	55.82	55.82	3.88	53.85	53.85	4.26	51.55	51.55	4.69	49.18	49.18	5.19	46.61	46.61	5.75	43.03	43.03	6.38
2250	72 (22.2)	69.32	37.07	4.05	66.00	35.83	4.43	62.79	34.57	4.87	59.31	33.25	5.37	55.63	31.88	5.94	51.58	30.40	6.57
	67 (19.4)	62.95	46.32	4.02	60.02	45.07	4.40	56.97	43.78	4.84	53.68	42.40	5.33	50.22	40.98	5.90	46.52	39.45	6.53
	63 (17.2)††	58.15	44.42	4.00	55.51	43.23	4.38	52.64	41.90	4.81	49.61	40.53	5.30	46.39	39.10	5.86	42.91	37.53	6.49
	62 (16.7)	57.14	55.48	3.99	56.05	55.64	4.38	53.03	53.03	4.81	50.69	50.69	5.31	47.85	47.85	5.88	44.94	44.94	6.52
	57 (13.9)	57.55	57.55	4.00	55.45	55.45	4.38	53.13	53.13	4.81	50.50	50.50	5.31	47.86	47.86	5.88	44.77	44.77	6.52

† Total and sensible capacities are net capacities based on 25 feet line set at DOE Appendix M1 test levels.

‡ Sensible capacities shown are based on 80°F (27°C) entering air at the indoor coil. For sensible capacities at other than 80°F (27°C), deduct 835 Btuh (245 kW) per 1000 CFM (480 L/S) of indoor coil air for each degree below 80°F (27°C), or add 835 Btuh (245 kW) per 1000 CFM (480 L/S) of indoor coil air per degree above 80°F (27°C).

Detailed cooling capacities are based on indoor and outdoor unit at the same elevation per AHRI standard 210/240-2023. If additional tubing length and/or indoor unit is located above outdoor unit, a slight variation in capacity may occur.

** System kW is total of indoor and outdoor unit kilowatts.

†† At TVA rating indoor condition (75°F edb/63°F ewb). All other indoor air temperatures are at 80°F edb.

NOTE: When the required data falls between the published data, interpolation may be performed. Extrapolation is not an acceptable practice.

EWB — Entering Wet Bulb

Manufacturer reserves the right to change, at any time, specifications and designs without notice and without obligations.

CONDENSER ONLY RATINGS

SST °F (°C)		CONDENSER ENTERING AIR TEMPERATURES °F (°C)						
		55.0 (12.8)	65.0 (18.3)	75.0 (23.9)	85.0 (29.4)	95.0 (35.0)	105.0 (40.6)	115.0 (46.1)
H4A6S18*K*WAA*								
30.0 (-1.1)	TCG	14.83	13.90	13.04	12.21	11.37	10.52	9.62
	SDT	65.54	75.07	84.64	94.24	103.83	113.38	122.93
	KW	0.76	0.87	1.00	1.13	1.28	1.45	1.65
35.0 (1.7)	TCG	16.35	15.37	14.45	13.55	12.65	11.73	10.74
	SDT	66.41	75.92	85.46	95.02	104.58	113.91	123.58
	KW	0.75	0.87	0.99	1.13	1.28	1.45	1.65
40.0 (4.4)	TCG	18.00	16.96	15.98	15.01	14.03	13.02	11.95
	SDT	67.38	76.86	86.33	95.86	105.37	114.82	124.28
	KW	0.74	0.86	0.98	1.12	1.27	1.45	1.65
45.0 (7.2)	TCG	19.79	18.69	17.63	16.58	15.52	14.41	13.27
	SDT	68.38	77.83	87.30	96.79	106.25	115.70	124.93
	KW	0.73	0.85	0.97	1.11	1.27	1.44	1.64
50.0 (10.0)	TCG	21.71	20.56	19.42	18.29	17.13	15.93	14.67
	SDT	69.54	78.86	88.30	97.74	107.16	116.55	125.86
	KW	0.72	0.84	0.96	1.10	1.26	1.44	1.64
55.0 (12.8)	TCG	23.81	22.57	21.36	20.14	18.89	17.58	16.21
	SDT	70.67	80.05	89.35	98.74	108.11	117.44	126.73
	KW	0.71	0.83	0.95	1.09	1.25	1.43	1.64
H4A6S24*K*WAA*								
30.0 (-1.1)	TCG	20.66	19.50	18.37	17.26	16.08	14.89	13.63
	SDT	67.58	77.03	86.52	95.82	105.52	114.98	124.48
	KW	1.06	1.19	1.33	1.49	1.68	1.90	2.16
35.0 (1.7)	TCG	22.74	21.49	20.26	19.03	17.78	16.48	15.06
	SDT	68.64	78.05	87.50	96.92	106.37	115.81	125.28
	KW	1.05	1.18	1.33	1.49	1.68	1.90	2.16
40.0 (4.4)	TCG	24.95	23.62	22.29	20.95	19.60	18.19	16.68
	SDT	69.80	79.09	88.49	97.90	107.26	116.66	125.78
	KW	1.03	1.17	1.32	1.49	1.69	1.91	2.16
45.0 (7.2)	TCG	27.33	25.89	24.45	23.00	21.52	20.01	18.42
	SDT	70.90	80.17	89.52	98.88	108.23	117.52	126.87
	KW	1.00	1.15	1.31	1.49	1.69	1.91	2.17
50.0 (10.0)	TCG	29.87	28.30	26.75	25.18	23.56	21.93	20.22
	SDT	72.06	81.29	90.59	99.91	109.34	118.49	127.74
	KW	0.97	1.13	1.30	1.49	1.69	1.92	2.18
55.0 (12.8)	TCG	32.55	30.86	29.18	27.48	25.74	23.97	22.13
	SDT	73.28	82.52	91.73	101.08	110.34	119.45	128.60
	KW	0.92	1.10	1.28	1.48	1.69	1.93	2.19
H4A6S30*K*WAA*								
30.0 (-1.1)	TCG	25.87	24.58	23.14	21.61	20.02	18.41	16.75
	SDT	70.63	80.16	89.60	98.97	108.29	117.58	126.79
	KW	1.15	1.35	1.55	1.75	1.96	2.19	2.46
35.0 (1.7)	TCG	28.58	27.14	25.55	23.86	22.15	20.44	18.68
	SDT	71.99	81.41	90.78	100.21	109.36	118.45	127.76
	KW	1.16	1.36	1.56	1.76	1.97	2.21	2.49
40.0 (4.4)	TCG	31.45	29.85	28.11	26.29	24.41	22.55	20.67
	SDT	73.39	82.70	92.06	101.34	110.58	119.66	128.79
	KW	1.17	1.37	1.57	1.77	1.99	2.23	2.52
45.0 (7.2)	TCG	34.50	32.73	30.84	28.87	26.85	24.83	22.80
	SDT	74.83	84.13	93.32	102.52	111.71	120.78	129.93
	KW	1.19	1.39	1.58	1.78	2.01	2.25	2.55
50.0 (10.0)	TCG	37.72	35.77	33.72	31.60	29.43	27.25	25.07
	SDT	76.28	85.55	94.71	103.79	112.90	121.93	131.01
	KW	1.20	1.40	1.60	1.80	2.03	2.28	2.58
55.0 (12.8)	TCG	41.09	38.97	36.75	34.46	32.14	29.80	27.47
	SDT	77.77	87.02	96.14	105.18	114.14	123.18	132.12
	KW	1.22	1.42	1.61	1.82	2.05	2.31	2.61

Manufacturer reserves the right to change, at any time, specifications and designs without notice and without obligations.

CONDENSER ONLY RATINGS (Continued)

SST °F (°C)		CONDENSER ENTERING AIR TEMPERATURES °F (°C)						
		55.0 (12.8)	65.0 (18.3)	75.0 (23.9)	85.0 (29.4)	95.0 (35.0)	105.0 (40.6)	115.0 (46.1)
H4A6S36*K*WAA*								
30.0 (-1.1)	TCG	29.51	27.83	26.26	24.71	23.13	21.48	19.72
	SDT	68.00	77.50	86.97	96.46	105.99	115.44	124.84
	KW	1.28	1.59	1.87	2.12	2.38	2.65	2.96
35.0 (1.7)	TCG	32.53	30.73	29.02	27.33	25.60	23.82	21.97
	SDT	69.08	78.52	87.98	97.41	106.85	116.13	125.19
	KW	1.29	1.60	1.88	2.13	2.39	2.67	2.97
40.0 (4.4)	TCG	35.75	33.84	31.98	30.13	28.22	26.24	24.14
	SDT	70.32	79.61	89.00	98.42	107.83	117.10	126.38
	KW	1.31	1.61	1.88	2.14	2.40	2.68	3.01
45.0 (7.2)	TCG	39.23	37.17	35.15	33.12	31.04	28.87	26.55
	SDT	71.49	80.75	90.09	99.44	108.75	118.00	127.28
	KW	1.32	1.61	1.88	2.13	2.40	2.69	3.02
50.0 (10.0)	TCG	42.95	40.71	38.53	36.28	34.00	31.66	29.13
	SDT	72.76	82.03	91.21	100.64	109.89	118.74	128.03
	KW	1.33	1.61	1.87	2.13	2.40	2.68	3.02
55.0 (12.8)	TCG	46.92	44.49	42.10	39.67	37.17	34.58	31.83
	SDT	74.03	83.29	92.50	101.77	110.97	119.96	129.03
	KW	1.33	1.61	1.86	2.12	2.38	2.68	3.02
H4A6S42*K*WAA*								
30.0 (-1.1)	TCG	40.38	38.28	36.23	34.16	31.99	29.73	27.24
	SDT	69.06	78.37	87.73	97.09	106.44	115.76	125.05
	KW	2.13	2.38	2.65	2.96	3.32	3.72	4.17
35.0 (1.7)	TCG	44.47	42.19	39.96	37.69	35.34	32.88	30.23
	SDT	70.37	79.61	88.90	98.20	107.48	116.73	125.97
	KW	2.15	2.39	2.66	2.98	3.33	3.74	4.20
40.0 (4.4)	TCG	48.89	46.41	43.97	41.49	38.93	36.25	33.38
	SDT	71.77	80.94	90.15	99.39	108.60	117.78	126.97
	KW	2.16	2.40	2.68	2.99	3.35	3.76	4.22
45.0 (7.2)	TCG	53.64	50.94	48.27	45.57	42.77	39.83	36.72
	SDT	73.28	82.37	91.51	100.66	109.81	118.92	128.03
	KW	2.17	2.42	2.69	3.01	3.37	3.78	4.25
50.0 (10.0)	TCG	58.72	55.78	52.88	49.91	46.86	43.66	40.28
	SDT	74.91	83.91	92.97	102.05	111.11	120.12	129.14
	KW	2.19	2.43	2.71	3.03	3.40	3.81	4.27
55.0 (12.8)	TCG	64.15	60.95	57.77	54.54	51.20	47.72	44.01
	SDT	76.66	85.58	94.55	103.53	112.49	121.41	130.32
	KW	2.20	2.45	2.73	3.05	3.42	3.83	4.30
H4A6S43*K*WAA*								
30 (-1.11)	TCG	38.90	37.10	35.20	33.20	31.10	29.00	22.90
	SDT	67.00	76.50	86.10	95.60	105.10	114.60	122.70
	KW	1.74	1.96	2.20	2.47	2.78	3.12	3.44
35 (1.67)	TCG	42.90	40.90	38.80	36.60	34.40	32.00	29.50
	SDT	68.10	77.60	87.10	96.60	106.00	115.50	124.80
	KW	1.75	1.97	2.21	2.48	2.79	3.13	3.52
40 (4.44)	TCG	47.30	45.00	42.70	40.30	37.80	35.30	32.60
	SDT	69.40	78.90	88.30	97.70	107.10	116.40	125.70
	KW	1.75	1.98	2.22	2.50	2.80	3.15	3.53
45 (7.22)	TCG	52.00	49.50	46.90	44.30	41.60	38.80	35.80
	SDT	70.80	80.20	89.50	98.90	108.20	117.40	126.60
	KW	1.76	1.98	2.23	2.51	2.82	3.16	3.55
50 (10.0)	TCG	57.10	54.30	51.50	48.60	45.60	42.50	39.30
	SDT	72.30	81.60	90.90	100.10	109.40	118.50	127.70
	KW	1.77	1.99	2.24	2.52	2.83	3.18	3.57
55 (12.78)	TCG	62.60	59.50	56.40	53.30	50.00	46.60	43.10
	SDT	73.90	83.10	92.30	101.50	110.60	119.70	128.80
	KW	1.77	2.00	2.25	2.53	2.84	3.19	3.59

Manufacturer reserves the right to change, at any time, specifications and designs without notice and without obligations.

CONDENSER ONLY RATINGS (Continued)

SST °F (°C)		CONDENSER ENTERING AIR TEMPERATURES °F (°C)						
		55.0 (12.8)	65.0 (18.3)	75.0 (23.9)	85.0 (29.4)	95.0 (35.0)	105.0 (40.6)	115.0 (46.1)
H4A6S48*K*WAA*								
30.0 (-1.1)	TCG	41.73	39.56	37.44	35.30	33.06	30.72	28.03
	SDT	69.10	78.41	87.76	97.12	106.47	115.79	125.05
	KW	2.22	2.47	2.76	3.08	3.45	3.87	4.33
35.0 (1.7)	TCG	45.96	43.60	41.29	38.95	36.52	33.97	31.24
	SDT	70.40	79.64	88.93	98.23	107.52	116.76	126.00
	KW	2.23	2.48	2.77	3.10	3.47	3.89	4.36
40.0 (4.4)	TCG	50.52	47.96	45.43	42.88	40.23	37.46	34.49
	SDT	71.81	80.98	90.19	99.43	108.64	117.82	127.00
	KW	2.24	2.50	2.78	3.11	3.48	3.91	4.39
45.0 (7.2)	TCG	55.43	52.64	49.88	47.09	44.20	41.16	37.95
	SDT	73.33	82.41	91.55	100.70	109.85	118.96	128.06
	KW	2.26	2.51	2.80	3.13	3.51	3.93	4.41
50.0 (10.0)	TCG	60.68	57.65	54.64	51.58	48.42	45.11	41.62
	SDT	74.96	83.96	93.02	102.09	111.15	120.17	129.19
	KW	2.27	2.53	2.82	3.15	3.53	3.96	4.44
55.0 (12.8)	TCG	66.29	62.99	59.70	56.36	52.91	49.30	45.47
	SDT	76.71	85.63	94.61	103.58	112.53	121.45	130.36
	KW	2.29	2.55	2.84	3.18	3.56	3.98	4.47
H4A6S49*K*WAA*								
30.0 (-1.1)	TCG	39.56	37.52	35.53	33.51	31.44	29.27	26.98
	SDT	68.73	78.29	87.88	97.50	107.13	116.77	126.41
	KW	2.06	2.26	2.50	2.80	3.14	3.54	4.00
35.0 (1.7)	TCG	43.54	41.34	39.17	36.98	34.72	32.39	29.90
	SDT	69.91	79.42	88.98	98.55	108.17	117.72	127.34
	KW	2.06	2.26	2.51	2.81	3.16	3.56	4.03
40.0 (4.4)	TCG	47.86	45.46	43.11	40.73	38.27	35.74	33.06
	SDT	71.21	80.65	90.16	99.61	109.25	118.76	128.31
	KW	2.06	2.27	2.52	2.82	3.18	3.59	4.05
45.0 (7.2)	TCG	52.52	49.93	47.37	44.78	42.11	39.36	36.46
	SDT	72.56	82.00	91.43	100.90	110.41	119.87	129.36
	KW	2.06	2.27	2.53	2.83	3.19	3.61	4.08
50.0 (10.0)	TCG	57.56	54.75	51.96	49.10	46.26	43.27	40.12
	SDT	74.05	83.40	92.80	102.31	111.64	121.05	130.48
	KW	2.06	2.27	2.53	2.85	3.21	3.63	4.11
55.0 (12.8)	TCG	63.00	59.96	56.92	53.86	50.72	47.47	44.07
	SDT	75.66	84.93	94.27	103.62	112.97	122.31	131.67
	KW	2.05	2.27	2.54	2.86	3.23	3.65	4.13
H4A6S60*K*WAA*								
30.0 (-1.1)	TCG	50.80	48.21	45.65	43.05	40.34	37.49	34.43
	SDT	70.45	79.72	89.03	98.37	107.69	116.98	126.21
	KW	2.75	3.01	3.33	3.70	4.14	4.64	5.22
35.0 (1.7)	TCG	55.93	53.14	50.36	47.53	44.58	41.49	38.19
	SDT	71.88	81.09	90.34	99.61	108.86	118.08	127.26
	KW	2.77	3.04	3.36	3.74	4.18	4.69	5.27
40.0 (4.4)	TCG	61.47	58.45	55.43	52.35	49.15	45.79	42.19
	SDT	73.42	82.56	91.74	100.93	110.12	119.28	128.37
	KW	2.79	3.06	3.39	3.77	4.22	4.73	5.32
45.0 (7.2)	TCG	67.45	64.16	60.88	57.35	54.05	50.40	46.54
	SDT	75.10	84.15	93.24	102.31	111.49	120.56	129.58
	KW	2.80	3.08	3.41	3.80	4.26	4.78	5.37
50.0 (10.0)	TCG	73.86	70.30	66.73	62.97	59.29	55.32	51.15
	SDT	76.91	85.87	94.90	103.89	112.95	121.92	130.85
	KW	2.81	3.10	3.44	3.83	4.30	4.82	5.42
55.0 (12.8)	TCG	80.72	76.86	72.98	68.99	64.89	60.59	56.06
	SDT	78.86	87.74	96.66	105.60	114.52	123.38	132.17
	KW	2.81	3.11	3.46	3.87	4.34	4.87	5.47

Manufacturer reserves the right to change, at any time, specifications and designs without notice and without obligations.

CONDENSER ONLY RATINGS (Continued)

SST °F (°C)		CONDENSER ENTERING AIR TEMPERATURES °F (°C)						
		55.0 (12.8)	65.0 (18.3)	75.0 (23.9)	85.0 (29.4)	95.0 (35.0)	105.0 (40.6)	115.0 (46.1)
H4A6S61*K*WAA*								
30.0 (-1.1)	TCG	48.32	45.96	43.56	41.07	38.45	35.71	32.78
	SDT	70.94	80.43	89.94	99.46	109.03	118.48	127.95
	KW	2.30	2.60	2.92	3.29	3.71	4.18	4.72
35.0 (1.7)	TCG	53.32	50.68	48.03	45.33	42.49	39.54	36.39
	SDT	72.28	81.74	91.23	100.67	110.18	119.59	129.01
	KW	2.32	2.62	2.95	3.31	3.74	4.22	4.76
40.0 (4.4)	TCG	58.65	55.73	52.85	49.91	46.82	43.63	40.25
	SDT	73.79	83.21	92.59	101.97	111.45	120.76	130.12
	KW	2.34	2.64	2.97	3.34	3.77	4.25	4.80
45.0 (7.2)	TCG	64.35	61.21	58.03	54.81	51.50	48.00	44.37
	SDT	75.43	84.69	94.02	103.34	112.65	122.05	131.30
	KW	2.36	2.66	3.00	3.37	3.80	4.29	4.84
50.0 (10.0)	TCG	70.48	67.02	63.56	60.04	56.43	52.69	48.80
	SDT	77.10	86.32	95.56	104.82	114.10	123.32	132.52
	KW	2.38	2.69	3.03	3.41	3.84	4.33	4.88
55.0 (12.8)	TCG	76.97	73.22	69.45	65.61	61.71	57.68	53.47
	SDT	79.02	88.06	97.22	106.41	115.57	124.70	133.74
	KW	2.41	2.72	3.06	3.44	3.88	4.37	4.93

KW - Outdoor Unit Kilowatts Only.
SDT -Saturated Temperature Leaving Compressor (°F)
SST -Saturated Temperature Entering Compressor (°F/°C)
TCG -Gross Cooling Capacity (1000 Btuh)

GUIDE SPECIFICATIONS

Air-cooled, split-system air conditioner H4A6S 1-1/2 to 5 nominal tons

GENERAL

System Description

Outdoor-mounted, air-cooled, split-system air conditioner unit suitable for ground or rooftop installation. Unit consists of a hermetic compressor, an air-cooled coil, propeller-type condenser fan, and a control box. Unit will discharge supply air upward as shown on contract drawings. Unit will be used in a refrigeration circuit to match up to a packaged fan coil or coil unit.

Quality Assurance

- Unit will be rated in accordance with the latest edition of AHRI Standard 210/240.
- Unit will be certified for capacity and efficiency, and listed in AHRI directory.
- Unit construction will comply with latest edition of ANSI/ ASHRAE and with NEC.
- Unit will be constructed in accordance with UL standards and will carry the UL label of approval. Unit will have c-UL-us approval.
- Unit cabinet will be capable of withstanding Federal Test Method Standard No. 141 (Method 6061) 500-hr salt spray test.
- Air-cooled condenser coils will be leak tested at 150 psig and pressure tested at 470 psig.
- Unit constructed in ISO9001 approved facility.

Delivery, Storage, and Handling

- Unit will be shipped as single package only and is stored and handled per unit manufacturer's recommendations.

Warranty (for inclusion by specifying engineer)

- U.S. and Canada only.

PRODUCTS

Equipment

Factory assembled, single piece, air-cooled air conditioner unit. Contained within the unit enclosure is all factory wiring, piping, controls, compressor, refrigerant charge R-410A, and special features required prior to field start-up.

Unit Cabinet

- Unit cabinet will be constructed of galvanized steel, bonderized, and coated with a powder coat paint.

Fans

- Condenser fan will be direct-drive propeller type, discharging air upward.
- Condenser fan motors will be totally enclosed, 1-phase type with class B insulation and permanently lubricated bearings. Shafts will be corrosion resistant.
- Fan blades will be statically and dynamically balanced.
- Condenser fan openings will be equipped with coated steel wire safety guards.

Compressor

- Compressor will be hermetically sealed.
- Compressor will be mounted on rubber vibration isolators.

Condenser Coil

- Condenser coil will be air cooled.
- Coil will be constructed of aluminum fins mechanically bonded to copper or aluminum tubes which are then cleaned, dehydrated, and sealed.

Refrigeration Components

- Refrigeration circuit components will include liquid-line shutoff valve with sweat connections, vapor-line shutoff valve with sweat connections, system charge of R-410Arefrigerant, and compressor oil.
- Unit will be equipped with low and high pressure switches and shipped with filter drier for R-410A refrigerant.

Operating Characteristics

- The capacity of the unit will meet or exceed _____ Btuh at a suction temperature of _____ °F/°C. The power consumption at full load will not exceed _____ kW.
- Combination of the unit and the evaporator or fan coil unit will have a total net cooling capacity of _____ Btuh or greater at conditions of _____ CFM entering air temperature at the evaporator at _____ °F/°C wet bulb and _____ °F/°C dry bulb, and air entering the unit at _____ °F/°C.
- The system will have a SEER2 of _____ Btuh/watt or greater at DOE conditions.

Electrical Requirements

- Nominal unit electrical characteristics will be _____ v, single phase, 60 Hz. The unit will be capable of satisfactory operation within voltage limits of _____ v to _____ v.
- Nominal unit electrical characteristics will be _____ v, three phase, 60 Hz. The unit will be capable of satisfactory operation within voltage limits of _____ v to _____ v.
- Unit electrical power will be single point connection.
- Control circuit will be 24v.

Special Features

- Refer to section of this literature identifying accessories and descriptions for specific features and available enhancements.

Manufacturer reserves the right to change, at any time, specifications and designs without notice and without obligations.

© 2023 Carrier. All rights reserved.

Manufacturer reserves the right to change, at any time, specifications and designs without notice and without obligations.