820SA/821SA
80% AFUE, Non-Communicating, Single Stage, ECM Motor, Variable Speed, 4-Way Multipoise, Non-Condensing Gas Furnace

Installation, Start–Up, Operating and Service and Maintenance Instructions

Read the entire instruction manual before starting the installation.

TABLE OF CONTENTS

SAFETY CONSIDERATIONS 3
INTRODUCTION 4
LOCATION 5
Table 1 – Minimum Free Area Required for Each Combustion Air opening of Duct to Outdoors 7
Table 2 – Minimum Space Volumes for 100% Combustion, Ventilation, and Dilution from Indoors 8
INSTALLATION 9
Table 3 – Opening Dimensions - In. (mm) 11
AIR DUCTS 12
GAS PIPING. 13
Table 4 – Maximum Capacity of Pipe 13
ELECTRICAL CONNECTIONS. 14
Table 5 – Electrical Data 16
NOTES FOR THERMOSTAT WIRING DIAGRAMS. 19
VENTING. 19
Table 6 – Minimum Allowable Input Rating of Space-Heating Appliance in Thousands of BTUh per Hour 20
Table 7 – Combined Appliance Maximum Input Rating in Thousands of BTUh per Hour 21
Table 8 – Recommended Minimum Vent Height Per Furnace and Vent Orientation 22
START-UP, ADJUSTMENT, AND SAFETY CHECK 24
SERVICE LABEL 26
WIRING DIAGRAM 26
Table 9 – Altitude Derate Multiplier for U.S.A. 28
Table 10 – Orifice Size* and Manifold Pressure (In. W.C.) for Gas Input Rate 29
Table 11 – Gas Rate (CU ft./hr). 29
Table 12 – Blower Off Delay Setup Switch 30
Table 13 – Air Delivery - CFM (With Filter)* 31
SERVICE AND MAINTENANCE PROCEDURES. 35
CARE AND MAINTENANCE 36
Table 14 – Filter Size Information - In. (mm) 37
SEQUENCE OF OPERATION 39
TROUBLESHOOTING GUIDE 42
PARTS REPLACEMENT INFORMATION GUIDE 44

ISO 9001 Quality

Use of the AHRI Certified TM Mark indicates a manufacturer's participation in the program. For verification of certification for individual products, go to www.ahridirectory.org.

⚠ WARNING

CARBON MONOXIDE POISONING HAZARD

Failure to follow this warning could result in personal injury and/or death.

Carbon Monoxide (CO) is a colorless, odorless, and tasteless poisonous gas that can be fatal when inhaled. Follow all installation, maintenance, and service instructions. See additional information below regarding the installation of a CO Alarm.

Most states in the USA and jurisdictions in Canada have laws that require the use of Carbon Monoxide (CO) alarms with fuel burning products. Examples of fuel burning products are furnaces, boilers, space heaters, generators, water heaters, stoves/ranges, clothes dryers, fireplaces, incinerators, automobiles, and other internal combustion engines. Even if there are no laws in your jurisdiction requiring a CO Alarm, it's highly recommended that whenever any fuel burning product is used in or around the home or business that the dwelling be equipped with a CO Alarm(s). The Consumer Product Safety Commission recommends the use of CO Alarm(s). The CO Alarm(s) must be installed, operated, and maintained according to the CO Alarm manufacturer's instructions. For more information about Carbon Monoxide, local laws, or to purchase a CO Alarm online, please visit the following website. https://www.kidde.com.

Portions of the text and tables are reprinted from NFPA 54/ANSI Z223.1E, with permission of National Fire Protection Association, Quincy, MA 02269 and American Gas Association, Washington DC 20001. This reprinted material is not the complete and official position of the NFPA or ANSI on the referenced subject, which is represented only by the standard in its entirety.

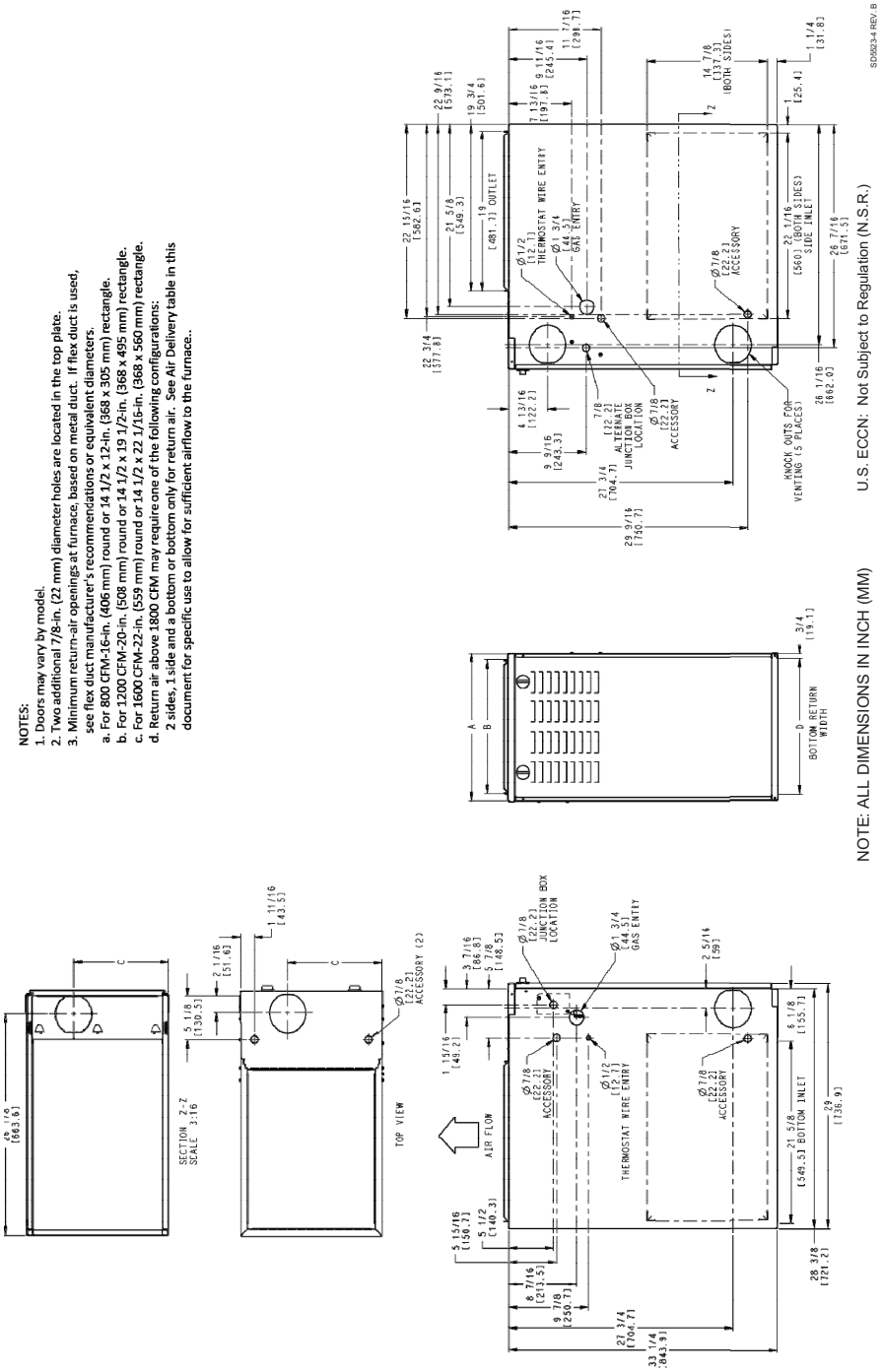

Fig. 1 – Dimensional Drawing

FURNACE SIZE	A CABINET WIDTH	B OUTLET WIDTH	C TOP AND BOTTOM FLUE COLLAR	D BOTTOM INLET WIDTH	VENT CONNECTION SIZE	SHIP WT. LB (KG)	ACCESSORY FILTER MEDIA CABINET SIZE
36045V14	14-3/16 (360)	12-9/16 (319)	9-5/16 (237)	12-11/16 (322)	4 (102)	112 (50.8)	16 (406)
48045V17	17-1/2 (445)	15-7/8 (403)	11-9/16 (294)	16 (406)	4 (102)	120 (54)	16 (406)
48070V17	17-1/2 (445)	15-7/8 (403)	11-9/16 (294)	16 (406)	4 (102)	129 (59)	16 (406)
60070V21	21 (533)	19-3/8 (492)	13-5/16 (338)	19-1/2 (495)	4 (102)	141 (63)	20 (506)
60090V21	21 (533)	19-3/8 (492)	13-5/16 (338)	19-1/2 (495)	4 (102)	143 (65)	20 (506)
60090V24	24-1/2 (622)	22-7/8 (581	15-1/16 (383)	23 (584)	4 (102)	150 (68)	24 (610)
66110V24	24-1/2 (622)	22-7/8 (581	15-1/16 (383)	23 (584)	4 (102)	153.5 (70)	24 (610)

SAFETY CONSIDERATIONS

⚠ WARNING

FIRE, EXPLOSION, ELECTRICAL SHOCK, AND CARBON MONOXIDE POISONING HAZARD

Failure to follow this warning could result in dangerous operation, personal injury, death, or property damage.

Improper installation, adjustment, alteration, service, maintenance, or use can cause carbon monoxide poisoning, explosion, fire, electrical shock, or other conditions which may cause personal injury or property damage. Consult a qualified service agency, local gas supplier, or your distributor or branch for information or assistance. The qualified service agency must use only factory-authorized and listed kits or accessories when modifying this product.

⚠ CAUTION

FURNACE RELIABILITY HAZARD

Failure to follow this caution may result in unit component damage.

Application of this furnace should be indoors with special attention given to vent sizing and material, gas input rate, air temperature rise, unit leveling, and unit sizing.

Installing and servicing heating equipment can be hazardous due to gas and electrical components. Only trained and qualified personnel should install, repair, or service heating equipment. Untrained personnel can perform basic maintenance functions such as cleaning and replacing air filters. All other operations must be performed by trained service personnel. When working on heating equipment, observe precautions in literature, on tags, and on labels attached to or shipped with furnace and other safety precautions that may apply.

These instructions cover minimum requirements and conform to existing national standards and safety codes. In some instances, these instructions exceed certain local codes and ordinances, especially those that may not have kept up with changing residential construction practices. We require these instructions as a minimum for a safe installation.

⚠ CAUTION

CUT HAZARD

Failure to follow this caution may result in personal injury.

Sheet metal parts may have sharp edges or burrs. Use care and wear appropriate protective clothing, safety glasses and gloves when handling parts, and servicing furnaces.

Wear safety glasses, protective clothing and work gloves. Have fire extinguisher available during start-up and adjustment procedures and service calls.

This is the safety-alert symbol ⚠. When you see this symbol on the furnace and in instructions or manuals, be alert to the potential for personal injury.

Understand the signal words DANGER, WARNING, and CAUTION. These words are used with the safety-alert symbol. DANGER identifies the most serious hazards which will result in severe personal injury or death. WARNING signifies a hazard which could result in personal injury or death. CAUTION is used to identify hazards which may result in minor personal injury or product and property damage. NOTE is used to highlight suggestions which will result in enhanced installation, reliability, or operation.

The following additional safety considerations should be followed for gas furnaces:

1. Use only with type of gas approved for this furnace. Refer to the furnace rating plate.
2. Install this furnace only in a location and position as specified in the “Location” section of these instructions.
3. Provide adequate combustion and ventilation air to the furnace space as specified in “Air for Combustion and Ventilation” section.
4. Combustion products must be discharged outdoors. Connect this furnace to an approved vent system only, as specified in the “Venting” section of these instructions.
5. Never test for gas leaks with an open flame. Use a commercially available soap solution made specifically for the detection of leaks to check all connections, as specified in the “Gas Piping” section.
6. Always install furnace to operate within the furnace’s intended temperature-rise range with a duct system which has an external static pressure within the allowable range, as specified in the “Start-Up, Adjustments, and Safety Check” section. See furnace rating plate.
7. When a furnace is installed so that supply ducts carry air circulated by the furnace to areas outside the space containing the furnace, the return air shall also be handled by duct(s) sealed to the furnace casing and terminating outside the space containing the furnace. See “Air Ducts” section.
8. A gas-fired furnace for installation in a residential garage must be installed as specified in the warning box in the “Location” section.
9. The furnace may be used for construction heat provided that the furnace installation and operation complies with the first CAUTION in the LOCATION section of these instructions.
10. These Multipoise Gas-Fired Furnaces are CSA (formerly A.G.A. and C.G.A.) design-certified for use with natural and propane gases (see furnace rating plate) and for installation in alcoves, attics, basements, closets, utility rooms, crawlspaces, and garages. The furnace is factory-shipped for use with natural gas. A CSA (A.G.A. and C.G.A.) listed accessory gas conversion kit is required to convert furnace for use with propane gas.
11. See Fig. 2 for required clearances to combustible construction.
12. Maintain a 1-in. (25 mm) clearance from combustible materials to supply air ductwork for a distance of 36 in. (914 mm) horizontally from the furnace. See NFPA 90B or local code for further requirements.
13. These furnaces SHALL NOT be installed directly on carpeting, tile, or any other combustible material other than wood flooring. In downflow installations, factory accessory floor base **MUST** be used when installed on combustible materials and wood flooring. Special base is not required when this furnace is installed on manufacturer’s Coil Assembly Part No. CNRV, CNPV, CAP, or CAR or when Coil Box Part No. KCAKC is used. See Fig. 2 for clearance to combustible construction information.

INTRODUCTION

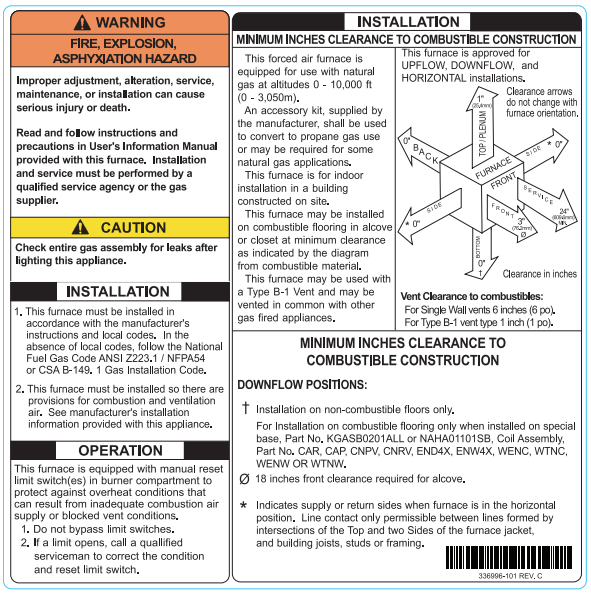

A10269

Fig. 2 – Clearances to Combustibles

This 4-way multipoise Category I fan-assisted furnace is CSA (formerly A.G.A. and C.G.A.) design-certified. A Category I fan-assisted furnace is an appliance equipped with an integral mechanical means to either draw or force products of combustion through the combustion chamber and/or heat exchanger. The furnace is factory-shipped for use with natural gas. This furnace is not approved for installation in mobile homes, recreational vehicles, or outdoors.

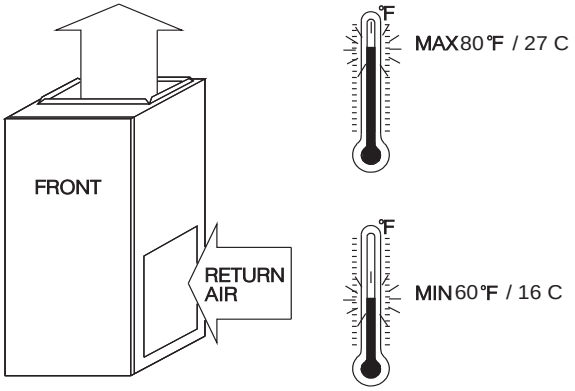

A06745

This furnace is designed for minimum continuous return-air temperature of 60°F (15°C) db or intermittent operation down to 55°F (13°C)db such as when used with a night setback thermostat. Return-air temperature must not exceed 80°F (27°C) db. Failure to follow these return-air temperature limits may affect reliability of heat exchangers, motors, and controls, see Fig. 5.

For accessory installation details, refer to the applicable instruction literature.

NOTE: Remove all shipping brackets and materials before operating the furnace.

⚠ WARNING

FIRE, INJURY OR DEATH HAZARD

Failure to follow this warning could result in personal injury, death and/or property damage.

When the furnace is installed in a residential garage, the burners and ignition sources must be located at least 18 in. (457 mm) above the floor. The furnace must be located or protected to avoid damage by vehicles. When the furnace is installed in a public garage, airplane hangar, or other building having a hazardous atmosphere, the furnace must be installed in accordance with the NFPA 54/ANSI Z223.1, see Fig. 3.

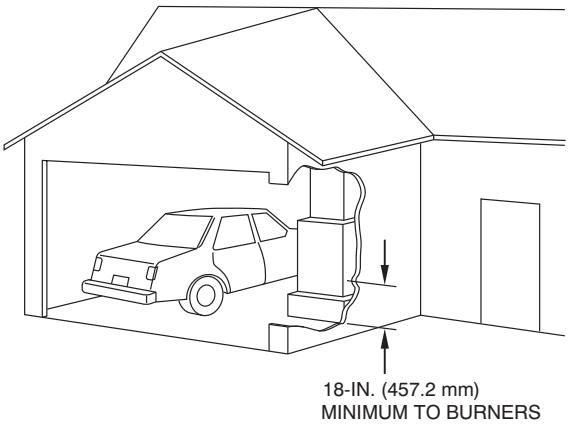

A93044

Fig. 3 – Installation in a Garage

CODES AND STANDARDS

Follow all national and local codes and standards in addition to these instructions. The installation must comply with regulations of the serving gas supplier, local building, heating, plumbing, and other codes. In absence of local codes, the installation must comply with the national codes listed below and all authorities having jurisdiction.

In the United States, follow all codes and standards for the following:

Safety

NFPA 54/ANSI Z223.1 and the Installation Standards, Warm Air Heating and Air Conditioning Systems ANSI/NFPA 90B.

General Installation

Current edition of the NFGC and the NFPA 90B. For copies, contact the National Fire Protection Association Inc., Batterymarch Park, Quincy, MA 02269; (www.NFPA.org) or for only the NFGC, contact the American Gas Association, 400 N. Capitol Street, N.W., Washington, DC 20001 (www.AGA.org.).

Combustion and Ventilation Air

Section 9.3 NFPA 54/ANSI Z223.1, Air for Combustion and Ventilation.

Duct Systems

Air Conditioning Contractors Association (ACCA) Manual D, Sheet Metal and Air Conditioning Contractors National Association (SMACNA), or American Society of Heating, Refrigeration, and Air Conditioning Engineers (ASHRAE) 2001 Fundamentals Handbook Chapter 35 or 2005 HVAC Systems and Equipment Handbook Chapters 9 and 16.

Acoustical Lining and Fibrous Glass Duct

Current edition of SMACNA and NFPA 90B as tested by UL Standard 181 for Class I Rigid Air Ducts

Gas Piping and Gas Pipe Pressure Testing

NFPA 54/ANSI Z223.1 ; chapters 5, 6, and 7 and National Plumbing Codes.

Electrical Connections

National Electrical Code (NEC) ANSI/NFPA70.

Venting

NFPA 54/ANSI Z223.1; chapters 12 and 13.

ELECTROSTATIC DISCHARGE (ESD) PRECAUTIONS PROCEDURE

1. Disconnect all power to the furnace. Multiple disconnects may be required. DO NOT TOUCH THE CONTROL OR ANY WIRE CONNECTED TO THE CONTROL PRIOR TO DISCHARGING YOUR BODY'S ELECTROSTATIC CHARGE TO GROUND.
2. Firmly touch the clean, unpainted, metal surface of the furnace chassis which is close to the control. Tools held in a person's hand during grounding will be satisfactorily discharged.

⚠ CAUTION

FURNACE RELIABILITY HAZARD

Failure to follow this caution may result in unit component damage.

Electrostatic discharge can affect electronic components. Take precautions during furnace installation and servicing to protect the furnace electronic control. Precautions will prevent electrostatic discharges from personnel and hand tools which are held during the procedure. These precautions will help to avoid exposing the control to electrostatic discharge by putting the furnace, the control, and the person at the same electrostatic potential.

3. After touching the chassis, you may proceed to service the control or connecting wires as long as you do nothing to recharge your body with static electricity (for example; DO NOT move or shuffle your feet, do not touch ungrounded objects, etc.).
4. If you touch ungrounded objects (and recharge your body with static electricity), firmly touch a clean, unpainted metal surface of the furnace again before touching control or wires.
5. Use this procedure for installed and uninstalled (ungrounded) furnaces.
6. Before removing a new control from its container, discharge your body's electrostatic charge to ground to protect the control from damage. If the control is to be installed in a furnace, follow items 1 through 4 before bringing the control or yourself in contact with the furnace. Put all used and new controls into containers before touching ungrounded objects.
7. An ESD service kit (available from commercial sources) may also be used to prevent ESD damage.

⚠ CAUTION

PERSONAL INJURY AND/OR PROPERTY DAMAGE HAZARD

Improper use or installation of this furnace may result in premature furnace component failure. This gas furnace may be used for heating buildings under construction provided that:

-The furnace is permanently installed with all electrical wiring, piping, venting and ducting installed according to these installation instructions. A return air duct is provided, sealed to the furnace casing, and terminated outside the space containing the furnace. This prevents a negative pressure condition as created by the circulating air blower, causing a flame rollout and/or drawing combustion products into the structure.

-The furnace is controlled by a thermostat. It may not be "hot wired" to provide heat continuously to the structure without thermostatic control.

-Clean outside air is provided for combustion. This is to minimize the corrosive effects of adhesives, sealers and other construction materials. It also prevents the entrainment of drywall dust into combustion air, which can cause fouling and plugging of furnace components.

-The temperature of the return air to the furnace is maintained between 55°F (13°C) and 80°F (27°C), with no evening setback or shutdown. The use of the furnace while the structure is under construction is deemed to be intermittent operation per our installation instructions.

-The air temperature rise is within the rated rise range on the furnace rating plate, and the gas input rate has been set to the nameplate value.

-The filters used to clean the circulating air during the construction process must be either changed or thoroughly cleaned prior to occupancy.

-The furnace, ductwork and filters are cleaned as necessary to remove drywall dust and construction debris from all HVAC system components after construction is completed.

-Verify proper furnace operating conditions including ignition, gas input rate, air temperature rise, and venting according to these installation instructions.

LOCATION

GENERAL

This multipoise furnace is shipped in packaged configuration. Some assembly and modifications are required when used in any of the four applications (shown in Fig. 4).

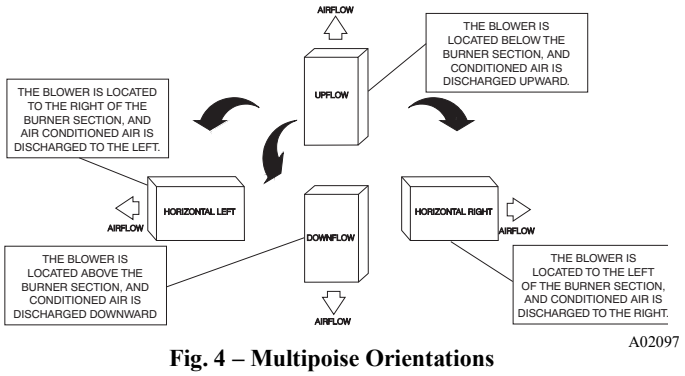

Fig. 4 – Multipoise Orientations

This furnace must:

- be installed so the electrical components are protected from water.
- not be installed directly on any combustible material other than wood flooring (refer to SAFETY CONSIDERATIONS).
- be located close to the chimney or vent and attached to an air distribution system. Refer to Air Ducts section.
- be provided ample space for servicing and cleaning. Always comply with minimum fire protection clearances shown on the furnace clearance to combustible construction label.

⚠ CAUTION

CARBON MONOXIDE POISONING / COMPONENT DAMAGE HAZARD

Failure to follow this warning could result in personal injury or death and unit component damage.

Corrosive or contaminated air may cause failure of parts containing flue gas, which could leak into the living space. Air for combustion must not be contaminated by halogen compounds, which include fluoride, chloride, bromide, and iodide. These elements can corrode heat exchangers and shorten furnace life. Air contaminants are found in aerosol sprays, detergents, bleaches, cleaning solvents, salts, air fresheners, and other household products. Do not install furnace in a corrosive or contaminated atmosphere. Make sure all combustion and circulating air requirements are met, in addition to all local codes and ordinances.

The following types of furnace installations may require OUTDOOR AIR for combustion due to chemical exposures:

- Commercial buildings
- Buildings with indoor pools
- Laundry rooms
- Hobby or craft rooms, and
- Chemical storage areas

If air is exposed to the following substances, it should not be used for combustion air, and outdoor air may be required for combustion:

- Permanent wave solutions
- Chlorinated waxes and cleaners
- Chlorine based swimming pool chemicals
- Water softening chemicals
- De-icing salts or chemicals
- Carbon tetrachloride
- Halogen type refrigerants
- Cleaning solvents (such as perchloroethylene)
- Printing inks, paint removers, varnishes, etc.
- Hydrochloric acid
- Cements and glues
- Antistatic fabric softeners for clothes dryers
- Masonry acid washing materials

All fuel-burning equipment must be supplied with air for fuel combustion. Sufficient air must be provided to avoid negative pressure in the equipment room or space. A positive seal must be made between the furnace cabinet and the return-air duct to prevent pulling air from the burner area and from draft safeguard opening.

⚠ CAUTION

FURNACE CORROSION HAZARD

Failure to follow this caution may result in furnace damage.

Air for combustion must not be contaminated by halogen compounds, which include fluoride, chloride, bromide, and iodide. These elements can corrode heat exchangers and shorten furnace life. Air contaminants are found in aerosol sprays, detergents, bleaches, cleaning solvents, salts, air fresheners, and other household products.

⚠ WARNING

FIRE HAZARD

Failure to follow this warning could result in personal injury, death and/or property damage.

Do not install the furnace on its back or hang furnace with control compartment facing downward. Safety control operation will be adversely affected. Never connect return-air ducts to the back of the furnace, see Fig. 5.

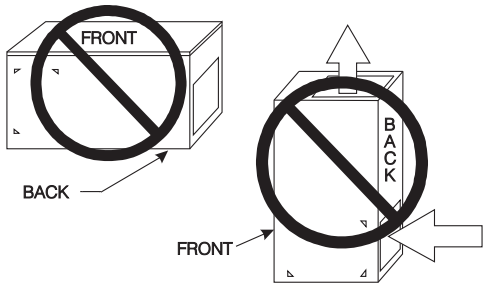

A02054

Fig. 5 – Prohibit Installation on Back

LOCATION RELATIVE TO COOLING EQUIPMENT

The cooling coil must be installed parallel with, or on the downstream side of the unit to avoid condensation in the heat exchangers. When installed parallel with the furnace, dampers or other flow control must prevent chilled air from entering the furnace. If the dampers are manually operated, they must be equipped with means to prevent operation of either unit unless the damper is in the full-heat or full-cool position.

AIR FOR COMBUSTION AND VENTILATION

Provisions for adequate combustion, ventilation, and dilution air must be provided in accordance with:

- U.S. Installations: Section 9.3 of the NFPA 54/ANSI Z223.1 , Air for Combustion and Ventilation and applicable provisions of the local building codes.

⚠ CAUTION

CARBON MONOXIDE POISONING HAZARD

Failure to follow this warning could result in personal injury or death.

The operation of exhaust fans, kitchen ventilation fans, clothes dryers, attic exhaust fans or fireplaces could create a NEGATIVE PRESSURE CONDITION at the furnace. Make-up air **MUST** be provided for the ventilation devices, in addition to that required by the furnace. Refer to the Carbon Monoxide Poisoning Hazard warning in the venting section of these instructions to determine if an adequate amount of make-up air is available.

The requirements for combustion and ventilation air depend upon whether or not the furnace is located in a space having a volume of at least 50 cubic feet per 1,000 BTUh input rating for all gas appliances installed in the space.

- Spaces having less than 50 cubic feet per 1,000 BTUh require the OUTDOOR COMBUSTION AIR METHOD.
- Spaces having at least 50 cubic feet per 1,000 BTUh may use the INDOOR COMBUSTION AIR, STANDARD or KNOWN AIR INFILTRATION METHOD.

Outdoor Combustion Air Method

1. Provide the space with sufficient air for proper combustion, ventilation, and dilution of flue gases using permanent horizontal or vertical duct(s) or opening(s) directly communicating with the outdoors or spaces that freely communicate with the outdoors.
2. Fig. 6 illustrates how to provide TWO OUTDOOR OPENINGS, one inlet and one outlet combustion and ventilation air opening, to the outdoors.
   a. One opening **MUST** commence within 12 in. (300 mm) of the ceiling and the second opening **MUST** commence within 12 in. (300 mm) of the floor.
   b. Size openings and ducts per Fig. 6 and Table 1.
   c. TWO HORIZONTAL DUCTS require 1 sq. in. (645 sq. mm) of free area per 2,000 BTUh (1,100 mm^2/kW) of combined input for all gas appliances in the space per Fig. 6 and Table 1.
   d. TWO OPENINGS OR VERTICAL DUCTS require 1 sq. in. (645 sq. mm) of free area per 4,000 BTUh (550 mm^2/kW) for combined input of all gas appliances in the space per Fig. 6 and Table 1.
3. ONE OUTDOOR OPENING requires:
   a. 1 sq. in. (645 sq. mm) of free area per 3,000 BTUh (734 mm^2/kW) for combined input of all gas appliances in the space per Table 1 and
   b. Not less than the sum of the areas of all vent connectors in the space.

The opening shall commence within 12 in. (300 mm) of the ceiling. Appliances in the space shall have clearances of at least 1 in. (25 mm) from the sides and back and 6 in. (150 mm) from the front. The opening shall directly communicate with the outdoors or shall communicate through a vertical or horizontal duct to the outdoors or spaces (crawl or attic) that freely communicate with the outdoors.

–In**door Combustion Air**© NFPA & AGA

–**Standard and Known-Air-Infiltration Rate** Methods

–**Indoor air** is permitted for combustion, ventilation, and dilution, if the **Standard** or **Known-Air-Infiltration** Method is used.

WARNING

CARBON MONOXIDE POISONING HAZARD

Failure to follow this warning could result in personal injury or death.
Many homes require air to be supplied from outdoors for furnace combustion, ventilation, and dilution of flue gases.
The furnace combustion air supply must be provided in accordance with this instruction manual.

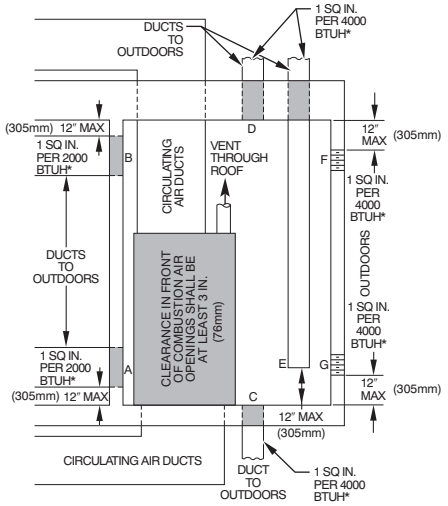

* Minimum dimensions of 3-in. (76 mm).
NOTE: Use any of the following combinations of openings:
A & B C & D D & E F & G

A03174

Fig. 6 – Air for Combustion, Ventilation, and Dilution for Outdoors

Table 1 – Minimum Free Area Required for Each Combustion Air opening of Duct to Outdoors

FURNACE INPUT (BTUH)	TWO HORIZONTAL DUCTS (1 SQ. IN./2,000 BTUH) (1,100 SQ. MM/KW)		SINGLE DUCT OR OPENING (1 SQ. IN./3,000 BTUH) (734 SQ. MM/KW)		TWO OPENINGS OR VERTICAL DUCTS (1 SQ. IN./4,000 BTUH) (550 SQ. MM/KW)	
	Free Area of Opening and Duct Sq. In. (Sq. mm)	Round Duct Dia. In. (mm)	Free Area of Opening and Duct Sq. In. (Sq. mm)	Round Duct Dia. In. (mm)	Free Area of Opening and Duct Sq. In. (Sq. mm)	Round Duct Dia. In. (mm)
44,000	22 (14194)	6 (152)	14.7 (9484)	5 (127)	11 (7096)	4 (102)
66,000	33 (21290)	7 (178)	22 (14193)	6 (152)	16.5 (10645)	5 (127)
88,000	44 (28387)	8 (203)	29.3 (18903)	7 (178)	22 (14193)	6 (152)
110,000	55 (35484)	9 (229)	36.7 (23677)	7 (178)	27.5 (17742)	6 (152)
132,000	66 (42580)	10 (254)	44 (28387)	8 (203)	33 (21290)	7 (178)
154,000	77 (49677)	10 (254)	51.3 (33096)	9 (229)	38.5 (24839)	8 (203)

Note: Not all models have these sizes.

EXAMPLES: Determining Free Area

FURNACE		WATER HEATER		TOTAL INPUT		
110,000	+	30,000	=	(140,000 divided by 4,000)	=	35.0 Sq. In. for each two Vertical Ducts or Openings
66,000	+	40,000	=	(106,000 divided by 3,000)	=	35.3 Sq. In. for a Single Duct or Opening
88,000	+	30,000	=	(118,000 divided by 2,000)	=	59.0 Sq. In. for each of two Horizontal Ducts

Table 2 – Minimum Space Volumes for 100% Combustion, Ventilation, and Dilution from Indoors

OTHER THAN FAN-ASSISTED TOTAL (1,000'S BTUH GAS INPUT RATE)				FAN-ASSISTED TOTAL (1,000'S BTUH GAS INPUT RATE)					
ACH	30	40	50	44	66	88	110	132	154
	Space Volume Ft^3 (M^3)								
0.60	1,050 (29.7)	1,400 (39.6)	1,750 (49.5)	1,100 (31.1)	1,650 (46.7)	2,200 (62.2)	2,750 (77.8)	3,300 (93.4)	3,850 (109.0)
0.50	1,260 (35.6)	1,680 (47.5)	2,100 (59.4)	1,320 (37.3)	1,980 (56.0)	2,640 (74.7)	3,300 (93.4)	3,960 (112.1)	4,620 (130.8)
0.40	1,575 (44.5)	2,100 (59.4)	2,625 (74.3)	1,650 (46.7)	2,475 (70.0)	3,300 (93.4)	4,125 (116.8)	4,950 (140.1)	5,775 (163.5)
0.30	2,100 (59.4)	2,800 (79.2)	3,500 (99.1)	2,200 (62.2)	3,300 (93.4)	4,400 (124.5)	5,500 (155.7)	6,600 (186.8)	7,700 (218.0)
0.20	3,150 (89.1)	4,200 (118.9)	5,250 (148.6)	3,300 (93.4)	4,950 (140.1)	6,600 (186.8)	8,250 (233.6)	9,900 (280.3)	11,550 (327.0)
0.10	6,300 (178.3)	8,400 (237.8)	10,500 (297.3)	6,600 (186.8)	9,900 (280.3)	13,200 (373.7)	16,500 (467.2)	19,800 (560.6)	23,100 (654.1)
0.00	NP	NP	NP	NP	NP	NP	NP	NP	NP

NP = Not Permitted
Note: Not all models have these sizes.

The Standard Method

Use the **Standard Method** if:

1. The space has no less volume than 50 cubic feet per 1,000 BTUh of the maximum input ratings for all gas appliances installed in the space and
2. The air infiltration rate is not known to be less than 0.40 air changes per hour (ACH).

Use the **Known Air Infiltration Rate Method** if the infiltration rate is known to be:

1. Less than 0.40 ACH and
2. Equal to or greater than 0.10 ACH

Infiltration rates greater than 0.60 ACH shall not be used. The minimum required volume of the space varies with the number of ACH and shall be determined per Table 2 or Equations 1 and 2. Determine the minimum required volume for each appliance in the space and add the volumes together to get the total minimum required volume for the space.

Table 2 - Minimum Space Volumes were determined by using the following equations from the National Fuel Gas Code ANSI Z223.1/NFPA 54, 9.3.2.2:

1. For other than fan-assisted appliances, such as a draft hood-equipped water heater:

$$\text{Volume}_{\text{Other}} = \frac{21\text{ft}^3}{\text{ACH}}\left(\frac{I_{\text{other}}}{1000\ \text{Btu/hr}}\right)$$

A04002

2. For fan-assisted appliances such as this furnace:

$$\text{Volume}_{\text{Fan}} = \frac{15\text{ft}^3}{\text{ACH}}\left(\frac{I_{\text{fan}}}{1000\ \text{Btu/hr}}\right)$$

A04003

If the following is applied to either equation:

- I_{other} = combined input of all other than fan-assisted appliances in BTUh/hr
- I_{fan} = combined input of all fan-assisted appliances in BTUh/hr
- ACH = air changes per hour (ACH shall not exceed 0.60.)

Then the following requirements apply to the **Standard Method** and to the **Known Air Infiltration Rate Method**.

1. Adjoining rooms can be considered part of a space if:
   a. There are no closeable doors between rooms.
   b. Combining spaces on same floor level. Each opening shall have free area of at least 1 in.^{2}/1,000 BTUh (2,000 mm^2/kW) of the total input rating of all gas appliances in the space, but not less than 100 in.^{2} (0.06 m^2). One opening shall commence within 12 in. (300 mm) of the ceiling and the second opening shall commence within 12 in. (300 mm) of the floor. The minimum dimension of air openings shall be at least 3 in. (80 mm), see Fig. 7.
   c. Combining space on different floor levels. The volumes of spaces on different floor levels shall be considered as communicating spaces if connected by one or more permanent openings in doors or floors having free area of at least 2 in.^{2}/1,000 BTUh (4,400 mm^2/kW) of total input rating of all gas appliances

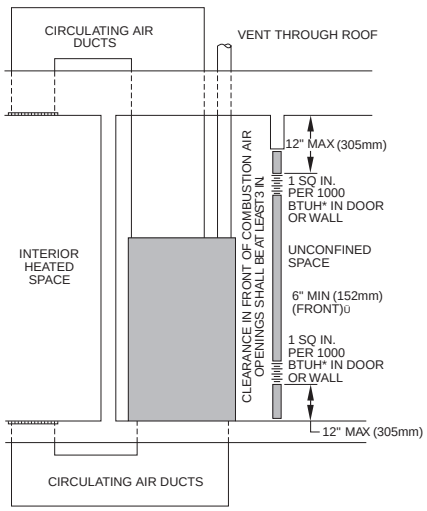

* Minimum opening size is 100 sq in. (64516 sq. mm) with minimum dimensions of 3 in. (76 mm)
† Minimum of 3 in. (76 mm) when type-B1 vent is used.

a03175

Fig. 7 – Air for Combustion, Ventilation, and Dilution from Indoors

2. An attic or crawlspace may be considered a space that freely communicates with the outdoors provided there are adequate permanent ventilation openings directly to outdoors having free area of at least 1-in.^{2}/4,000 BTUh of total input rating for all gas appliances in the space.
3. In spaces that use the **Indoor Combustion Air Method**, infiltration should be adequate to provide air for combustion, permanent ventilation and dilution of flue gases. However, in buildings with unusually tight construction, additional air **MUST** be provided using the methods described in the **Outdoor Combustion Air Method** section.
4. Unusually tight construction is defined as Construction with:
   a. Walls and ceilings exposed to the outdoors have a continuous, sealed vapor barrier. Openings are gasketed or sealed and

b. Doors and openable windows are weatherstripped and

c. Other openings are caulked or sealed. These include joints around window and door frames, between sole plates and floors, between wall-ceiling joints, between wall panels, at penetrations for plumbing, electrical and gas lines, etc.

Combination of Indoor and Outdoor Air

1. Indoor openings shall comply with the Indoor Combustion Air Method below and,
2. Outdoor openings shall be located as required in the Outdoor Combustion Air Method mentioned previously and,
3. Outdoor openings shall be sized as follows:

   a. Calculate the Ratio of all Indoor Space volume divided by required volume for Indoor Combustion Air Method below.

   b. Outdoor opening size reduction Factor is 1 minus the Ratio in a. above.

   c. Minimum size of Outdoor openings shall be the size required in Outdoor Combustion Air Method above multiplied by reduction Factor in b. above. The minimum dimension of air openings shall be not less than 3 in. (80 mm).

INSTALLATION

UPFLOW INSTALLATION

Bottom Return Air Inlet

These furnaces are shipped with bottom closure panel installed in bottom return-air opening. Remove and discard this panel when bottom return air is used. To remove bottom closure panel, perform the following:

1. Tilt or raise furnace and remove 2 screws holding bottom filler panel, see Fig. 8.
2. Rotate bottom filler panel downward to release holding tabs.
3. Remove bottom closure panel.
4. Reinstall bottom filler panel and screws.

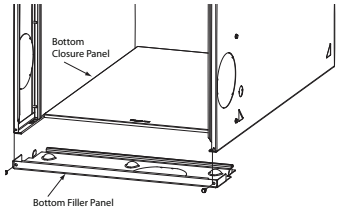

A10273

Fig. 8 – Removing Bottom Closure Panel

Side Return Air Inlet

These furnaces are shipped with bottom closure panel installed in bottom return-air opening. This panel **MUST** be in place when only side return air is used.

NOTE: Side return-air openings can be used in UPFLOW and most HORIZONTAL configurations. Do not use side return-air openings in DOWNFLOW configuration.

Leveling Legs (If Desired)

In upflow position with side return inlet(s), leveling legs may be used, see Fig. 9. Install field-supplied, 5/16 x 1-1/2 in. (8 x 38 mm) (max) corrosion-resistant machine bolts, washers and nuts.

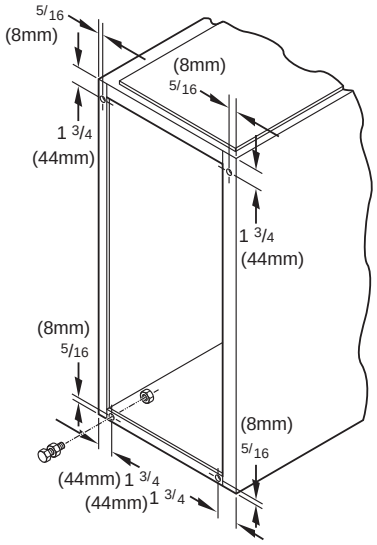

A89014

Fig. 9 – Leveling Legs

NOTE: Bottom closure must be used when leveling legs are used. It may be necessary to remove and reinstall bottom closure panel to install leveling legs. To remove bottom closure panel, see Item 1 in Bottom Return Air Inlet section in Step 1 above.

To install leveling legs:

1. Position furnace on its back. Locate and drill a hole in each bottom corner of furnace, see Fig. 9.
2. For each leg, install nut on bolt and then install bolt with nut in hole. (Install flat washer if desired.)
3. Install another nut on other side of furnace base. (Install flat washer if desired.)
4. Adjust outside nut to provide desired height, and tighten inside nut to secure arrangement.
5. Reinstall bottom closure panel if removed.

DOWNFLOW INSTALLATION

NOTE: For downflow applications, this furnace is approved for use on combustible flooring when any one of the following 3 accessories are used:

- Special Base, KGASB
- Cased Coil Assembly Part No. CNPV, CNRV, CAP, or CAR
- Coil Box Part No. KCAKC

1. Determine application being installed from Table 3.
2. Construct hole in floor, see Table 3 and Fig. 10.
3. Construct plenum to dimensions specified, see Table 3 and Fig. 10.

NOTE: It is recommended that the perforated supply-air duct flanges be completely folded over or removed from furnace when installing the furnace on a factory-supplied cased coil or coil box. To remove the supply-air duct flange, use wide duct pliers or hand seamers to bend flange back and forth until it breaks off. Be careful of sharp edges. (Refer to Duct Flanges (Fig.16) in the “Air Ducts” section.)

Bottom Return Air Inlet

These furnaces are shipped with bottom closure panel installed in bottom return-air opening. Remove and discard this panel when bottom return air is used. To remove bottom closure panel, perform the following:

1. Tilt or raise furnace and remove 2 screws holding bottom filler panel, see Fig. 8.
2. Rotate bottom filler panel downward to release holding tabs.
3. Remove bottom closure panel.
4. Reinstall bottom filler panel and screws.

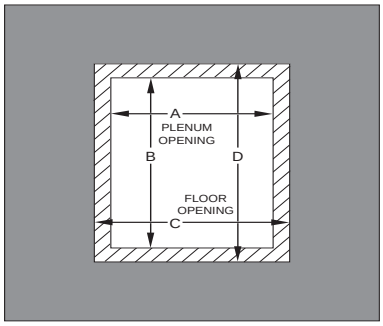

A96283

Fig. 10 – Floor and Plenum Opening Dimensions

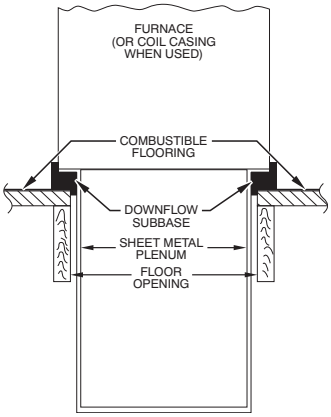

A96285

Fig. 11 – Furnace, Plenum, and Subbase Installed on a Combustible Floor

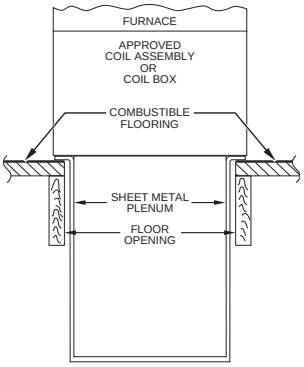

A08556

Fig. 12 – Furnace, Plenum, and Coil Assembly or Coil Box Installed on a Combustible Floor

HORIZONTAL INSTALLATION

The furnace can be installed horizontally in an attic or crawlspace on either the left-hand (LH) or right-hand (RH) side. The furnace can be hung from floor joists, rafters or trusses or installed on a non-combustible platform, blocks, bricks or pad.

Suspended Furnace Support

The furnace may be supported under each end with threaded rod, angle iron or metal plumber's strap as shown, see Fig. 14 and Fig. 15. Secure angle iron to bottom of furnace as shown. Heavy-gauge sheet metal straps (plumber's straps) may be used to suspend the furnace from each bottom corner. To prevent screws from pulling out, use 2 #8 x 3/4 in. screws into the side and 2 #8 x in. screws in the bottom of the furnace casing for each strap, see Fig. 14 and Fig. 15.

If the screws are attached to ONLY the furnace sides and not the bottom, the straps must be vertical against the furnace sides and not pull away from the furnace sides, so that the strap attachment screws are not in tension (are loaded in shear) for reliable support.

Platform Furnace Support

Construct working platform at location where all required furnace clearances are met, see Fig. 2 and Fig. 13. For furnaces with 1-in. (25 mm) clearance requirement on side, set furnace on non-combustible blocks, bricks or angle iron. For crawlspace installations, if the furnace is not suspended from the floor joists, the ground underneath furnace must be level and the furnace set on blocks or bricks.

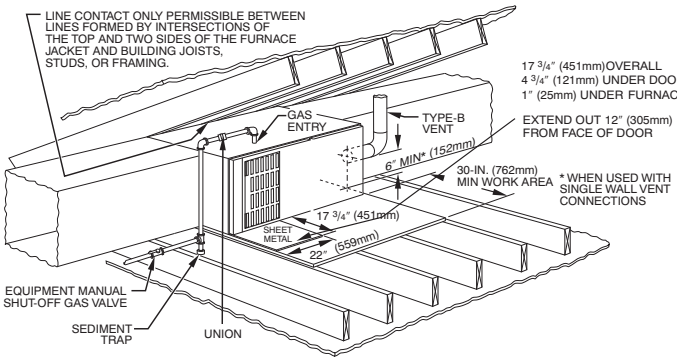

A10164

Fig. 13 – Typical Attic Installation

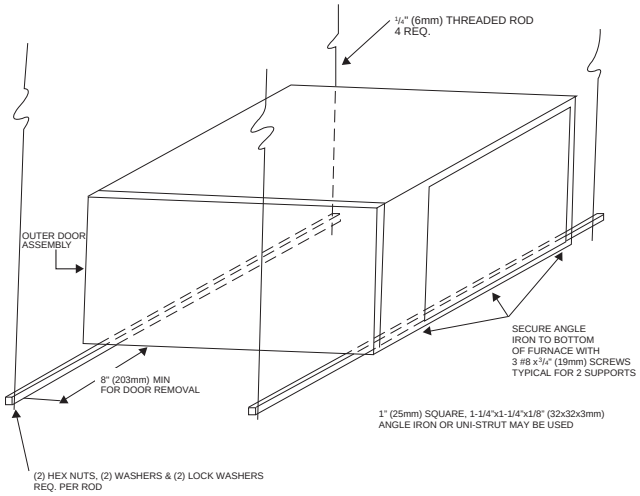

A10130

Fig. 14 – Horizontal Unit Suspension

Table 3 – Opening Dimensions - In. (mm)

FURNACE CASING WIDTH	APPLICATION	PLENUM OPENING		FLOOR OPENING	
		A	B	C	D
14–3/16 (360)	Upflow Applications on Combustible or Noncombustible Flooring (subbase not required)	12-11/16 (322)	21-5/8 (549)	13-5/16 (338)	22-1/4 (565)
	Downflow Applications on Noncombustible Flooring (subbase not required)	12-9/16 (319)	19 (483)	13-3/16 (335)	19-5/8 (498)
	Downflow Applications on Combustible Flooring (subbase required)	11-13/16 (284)	19 (483)	13-7/16 (341)	20-5/8 (600)
	Downflow Applications on Combustible Flooring with Cased Coil (subbase not required)	12-5/16 (319)	19 (483)	13-5/16 (338)	20 (508)
17–1/2 (445)	Upflow Applications on Combustible or Noncombustible Flooring (subbase not required)	16 (406)	21-5/8 (549)	16-5/8 (422)	22-1/4 (565)
	Downflow Applications on Noncombustible Flooring (subbase not required)	15-7/8 (403)	19 (483)	16-1/2 (419)	19-5/8 (498)
	Downflow Applications on Combustible Flooring (subbase required)	15-1/8 (384)	19 (483)	16-3/4 (425)	20-5/8 (600)
	Downflow Applications on Combustible Flooring with Cased Coil (subbase not required)	15-1/2 (394)	19 (483)	16-1/2 (419)	20 (508)
21 (533)	Upflow Applications on Combustible or Noncombustible Flooring (subbase not required)	19-1/2 (495)	21-5/8 (549)	20-1/8 (511)	22-1/4 (565)
	Downflow Applications on Noncombustible Flooring (subbase not required)	19-3/8 (492)	19 (483)	20 (508)	19-5/8 (498)
	Downflow Applications on Combustible Flooring (subbase required)	18-5/8 (473)	19 (483)	20-1/4 (514)	20-5/8 (600)
	Downflow Applications on Combustible Flooring with Cased Coil (subbase not required)	19 (483)	19 (483)	20 (508)	20 (508)
24-1/2 (622)	Upflow Applications on Combustible or Noncombustible Flooring (subbase not required)	23 (584)	21-1/8 (537)	23-5/8 (600)	22-1/4 (565)
	Downflow Applications on Noncombustible Flooring (subbase not required)	22-7/8 (581)	19 (483)	23-1/2 (597)	19-5/8 (498)
	Downflow Applications on Combustible Flooring (subbase required)	22-1/8 (562)	19 (483)	23-3/4 (603)	20-5/8 (600)
	Downflow Applications on Combustible Flooring with Cased Coil (subbase not required)	22-1/2 (572)	19 (483)	23-1/2 (597)	20 (508)

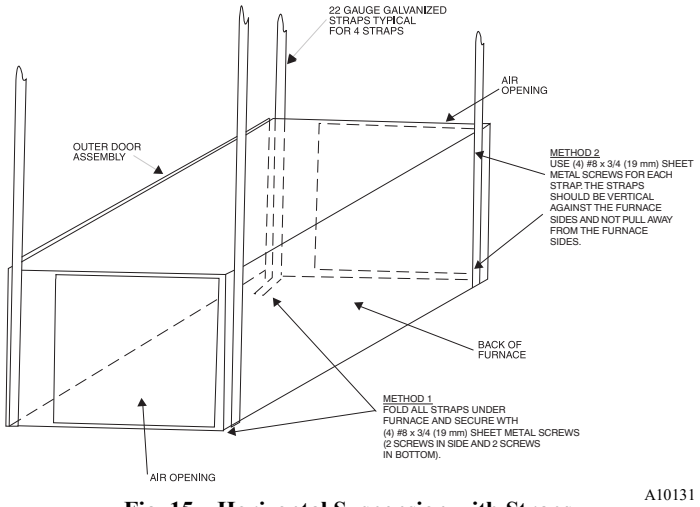

Fig. 15 – Horizontal Suspension with Straps

Roll-Out Protection

Provide a minimum 17-3/4-in. X 22-in. (451 X 559 mm) piece of sheet metal for flame roll-out protection in front of burner area for furnaces closer than 12-in. (305 mm) above the combustible deck or suspended furnaces closer than 12-in. (305 mm) to joists. The sheet metal **MUST** extend underneath the furnace casing by 1-in. (25 mm) with the door removed.

The bottom closure panel on furnaces of widths 17-1/2-in. (445 mm) and larger may be used for flame roll-out protection when bottom of furnace is used for return air connection. See Fig. 13 for proper orientation of roll-out shield.

Bottom Return Air Inlet

These furnaces are shipped with bottom closure panel installed in bottom return-air opening. Remove and discard this panel when bottom return air is used. To remove bottom closure panel, perform the following:

1. Tilt or raise furnace and remove two screws holding bottom filler panel, see Fig. 8.
2. Rotate bottom filler panel downward to release holding tabs.
3. Remove bottom closure panel.
4. Reinstall bottom filler panel and screws.

Side Return Air Inlet

These furnaces are shipped with bottom closure panel installed in bottom return-air opening. This panel **MUST** be in place when side return air inlet(s) are used without a bottom return air inlet.

Not all horizontal furnaces are approved for side return air connections, see Fig. 17.

⚠ WARNING

FIRE, EXPLOSION, AND CARBON MONOXIDE POISONING HAZARD

Failure to follow this warning could result in personal injury, death, or property damage.

Do not install the furnace on its back or hang furnace with control compartment facing downward. Safety control operation will be adversely affected. Never connect return-air ducts to the back of the furnace.

Filter Arrangement

⚠ WARNING

CARBON MONOXIDE POISONING HAZARD

Failure to follow this warning could result in personal injury, or death.

Never operate a furnace without a filter or with filter access door removed.

There are no provisions for an internal filter rack in these furnaces. A field-supplied accessory external filter rack is required. Refer to the instructions supplied with the external filter rack for assembly and installation options.

AIR DUCTS

GENERAL REQUIREMENTS

The duct system should be designed and sized according to accepted national standards such as those published by: Air Conditioning Contractors Association (ACCA), Sheet Metal and Air Conditioning Contractors National Association (SMACNA) or American Society of Heating, Refrigerating and Air Conditioning Engineers (ASHRAE) or consult *The Air Systems Design Guidelines* reference tables available from your local distributor. The duct system should be sized to handle the required system design CFM at the design external static pressure. The furnace airflow rates are provided in Table 13-Air Delivery-CFM (With Filter). When a furnace is installed so that the supply ducts carry air circulated by the furnace to areas outside the space containing the furnace, the return air shall also be handled by duct(s) sealed to the furnace casing and terminating outside the space containing the furnace.

Secure ductwork with proper fasteners for type of ductwork used. Seal supply- and return-duct connections to furnace with code approved tape or duct sealer.

NOTE: Flexible connections should be used between ductwork and furnace to prevent transmission of vibration.

Ductwork passing through unconditioned space should be insulated to enhance system performance. When air conditioning is used, a vapor barrier is recommended.

Maintain a 1-in. (25 mm) clearance from combustible materials to supply air ductwork for a distance of 36-in. (914 mm) horizontally from the furnace. See NFPA 90B or local code for further requirements.

Ductwork Acoustical Treatment

NOTE: Metal duct systems that do not have a 90 degree elbow and 10 ft. (3 M) of main duct to the first branch take-off may require internal acoustical lining. As an alternative, fibrous ductwork may be used if constructed and installed in accordance with the latest edition of SMACNA construction standard on fibrous glass ducts. Both acoustical lining and fibrous ductwork shall comply with NFPA 90B as tested by UL Standard 181 for Class 1 Rigid air ducts.

SUPPLY AIR CONNECTIONS

For a furnace not equipped with a cooling coil, the outlet duct shall be provided with a removable access panel. This opening shall be accessible when the furnace is installed and shall be of such a size that the heat exchanger can be viewed for possible openings using light assistance or a probe can be inserted for sampling the air stream. The cover attachment shall prevent leaks.

Upflow and Horizontal Furnaces

Connect supply-air duct to flanges on furnace supply-air outlet. Bend flange upward to 90° with wide duct pliers, see Fig. 16. The supply-air duct must be connected to ONLY the furnace supply-outlet-air duct flanges or air conditioning coil casing (when used). DO NOT cut main furnace casing side to attach supply air duct, humidifier, or other accessories. All accessories **MUST** be connected to duct external to furnace main casing.

NOTE: For horizontal applications, the top most flange may be bent past 90° to allow the evaporator coil to hang on the flange temporarily while the remaining attachment and sealing of the coil are performed.

Downflow Furnaces

Connect supply-air duct to supply-air outlet on furnace. Bend flange inward past 90° with wide duct pliers (See Fig. 16). The supply-air duct must be connected to ONLY the furnace supply outlet or air conditioning coil casing (when used). When installed on combustible material, supply-air duct must be connected to ONLY the factory-approved accessory subbase, or a factory-approved air conditioning coil casing. DO NOT cut main furnace casing to attach supply side air duct, humidifier, or other accessories. All accessories **MUST** be connected to duct external to furnace casing.

RETURN AIR CONNECTIONS

⚠ WARNING

FIRE HAZARD

A failure to follow this warning could cause personal injury, death and/or property damage.

Never connect return-air ducts to the back of the furnace. Follow instructions below.

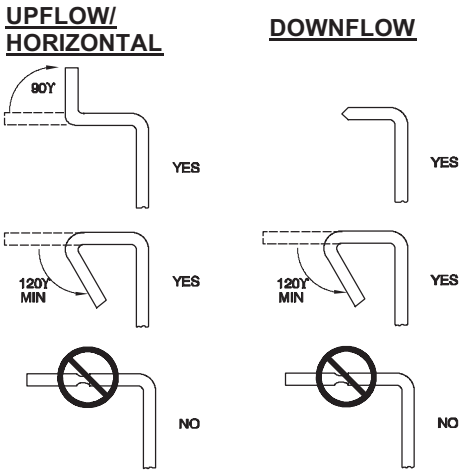

A190346

Fig. 16 – Duct Flanges

Downflow Furnaces

The return-air duct must be connected to return-air opening bottom inlet, see Fig. 1. DO NOT cut into casing sides (left or right). Side opening is permitted for only upflow and certain horizontal furnaces. Bypass humidifier connections should be made at ductwork or coil casing sides exterior to furnace, see Fig. 17.

Upflow and Horizontal Furnaces

The return-air duct must be connected to bottom, sides (left or right), or a combination of bottom and side(s) of main furnace casing, see Fig. 1. Bypass humidifier may be attached into unused return air side of the furnace casing, see Fig. 18 and Fig. 19. Not all upflow and horizontal furnace models are approved for side return air connections, see Fig. 18 and Fig. 19.

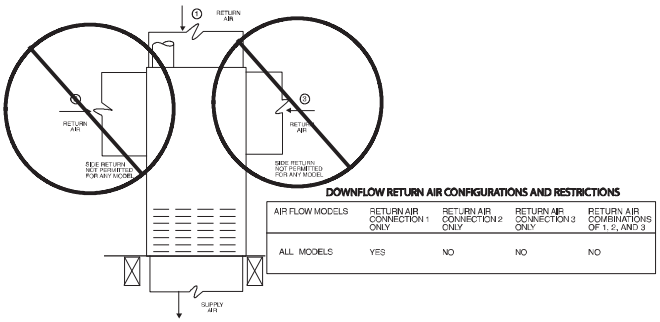

AIR FLOW MODELS	RETURN AIR CONNECTION 1 ONLY	RETURN AIR CONNECTION 2 ONLY	RETURN AIR CONNECTION 3 ONLY	RETURN AIR COMBINATIONS OF 1, 2, AND 3
ALL MODELS	YES	NO	NO	NO

A190271

Fig. 17 – Downflow Return Air Configurations and Restriction

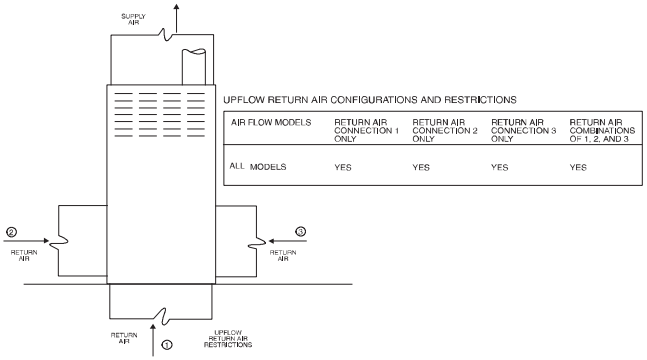

UPFLOW RETURN AIR CONFIGURATIONS AND RESTRICTIONS

AIR FLOW MODELS	RETURN AIR CONNECTION 1 ONLY	RETURN AIR CONNECTION 2 ONLY	RETURN AIR CONNECTION 3 ONLY	RETURN AIR COMBINATIONS OF 1, 2, AND 3
ALL MODELS	YES	YES	YES	YES

A190270

Fig. 18 – Upflow Return Air Configurations and Restrictions

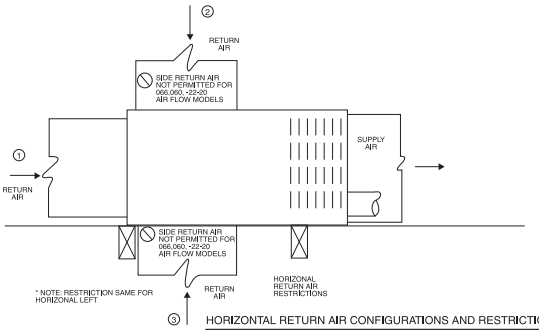

HORIZONTAL RETURN AIR CONFIGURATIONS AND RESTRICTIONS

AIR FLOW MODELS	RETURN AIR CONNECTION 1 ONLY	RETURN AIR CONNECTION 2 ONLY	RETURN AIR CONNECTION 3 ONLY	RETURN AIR COMBINATIONS OF 1, 2, AND 3
066,060, -22 AND -20 MODELS	YES	NO	NO	NO
ALL OTHER MODELS	YES	YES	YES	YES

A02162

Fig. 19 – Horizontal Return Air Configurations and Restrictions

GAS PIPING

⚠ WARNING

FIRE OR EXPLOSION HAZARD

Failure to follow this warning could result in personal injury, death, and/or property damage.

Never purge a gas line into a combustion chamber. Never test for gas leaks with an open flame. Use a commercially available soap solution made specifically for the detection of leaks to check all connections. A fire or explosion may result causing property damage, personal injury or loss of life.

⚠ WARNING

FIRE OR EXPLOSION HAZARD

Failure to follow this warning could result in personal injury, death, and/or property damage.

Use proper length of pipe to avoid stress on gas control manifold and gas valve.

⚠ WARNING

FIRE OR EXPLOSION HAZARD

Failure to follow this warning could result in personal injury, death, and/or property damage.

Gas valve inlet and/or inlet pipe must remain capped until gas supply line is permanently installed to protect the valve from moisture and debris. Also, install a sediment trap in the gas supply piping at the inlet to the gas valve.

Gas piping must be installed in accordance with national and local codes. Refer to current edition of NFGC in the U.S.

Installations must be made in accordance with all authorities having jurisdiction. If possible, the gas supply line should be a separate line running directly from meter to furnace.

NOTE: In the state of Massachusetts:

1. Gas supply connections **MUST** be performed by a licensed plumber or gas fitter.
2. When flexible connectors are used, the maximum length shall not exceed 36 in. (915 mm).
3. When lever handle type manual equipment shutoff valves are used, they shall be T-handle valves.
4. The use of copper tubing for gas piping is NOT approved by the state of Massachusetts.

Table 4 – Maximum Capacity of Pipe

NOMINAL IRON PIPE SIZE IN. (MM)	INTERNAL DIA. IN. (MM)	LENGTH OF PIPE - FT (M)				
		10 (3.0)	20 (6.0)	30 (9.1)	40 (12.1)	50 (15.2)
1/2 (12.7)	0.622(158)	175	120	97	82	73
3/4 (19.0)	0.824 (20.9)	360	250	200	170	151
1 (25.4)	1.049 (26.6)	680	465	375	320	285
1-1/4 (31.8)	1.380 (35.0)	1400	950	770	660	580
1-1/2 (38.1)	1.610 (40.9)	2100	1460	1180	990	900

* Cubic ft of gas per hr for gas pressures of 0.5 psig (14-in. w.c.) or less and a pressure drop of 0.5-in. w.c. (based on a 0.60 specific gravity gas). Ref: Table 7 and 9.2 NFGC.

Refer to Table 4 for recommended gas pipe sizing. Risers must be used to connect to furnace and to meter. Support all gas piping with appropriate straps, hangers, etc. Use a minimum of 1 hanger every 6 ft. (1.8 M). Joint compound (pipe dope) should be applied sparingly and only to male threads of joints. Pipe dope must be resistant to the action of propane gas.

⚠ WARNING

FIRE OR EXPLOSION HAZARD

A failure to follow this warning could result in personal injury, death, and/or property damage.

If local codes allow the use of a flexible gas appliance connector, always use a new listed connector. Do not use a connector which has previously served another gas appliance. Black iron pipe shall be installed at the furnace gas control valve and extend a minimum of 2-in. (51 mm) outside the furnace.

⚠ CAUTION

FURNACE DAMAGE HAZARD

Failure to follow this caution may result in furnace damage.

Connect gas pipe to furnace using a backup wrench to avoid damaging gas controls and burner misalignment.

An accessible manual equipment shutoff valve **MUST** be installed external to furnace casing and within 6 ft. (1.8 M) of furnace. A 1/8-in. (3 mm) NPT plugged tapping, accessible for test gauge connection, **MUST** be installed immediately upstream of gas supply connection to furnace and downstream of manual equipment shutoff valve.

NOTE: The furnace gas control valve inlet pressure tap connection is suitable to use as test gauge connection providing test pressure DOES NOT exceed maximum 0.5 psig (14-in. w.c.) stated on gas control valve, see Fig. 20.

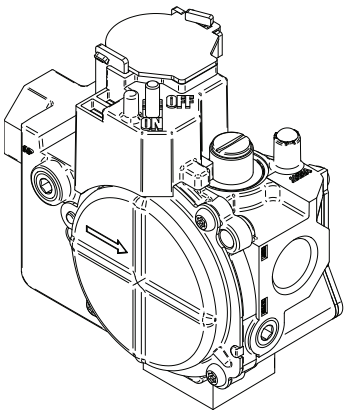

A06666

Fig. 20 – Redundant Automatic Gas Control Valve

Some installations require gas entry on right side of furnace (as viewed in upflow), see Fig. 21.

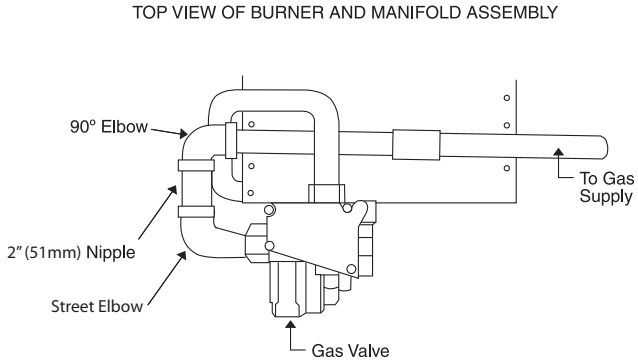

A08551

Fig. 21 – Burner and Manifold

Install a sediment trap in riser leading to furnace, see Fig. 22. Connect a capped nipple into lower end of tee. Capped nipple should extend below level of furnace gas controls. Place a ground joint union between furnace gas control valve and exterior manual equipment gas shutoff valve.

A 1/8-in. (3 mm) NPT plugged tapping, accessible for test gauge connection, **MUST** be installed immediately upstream of gas supply connection to furnace and downstream of manual equipment shutoff valve.

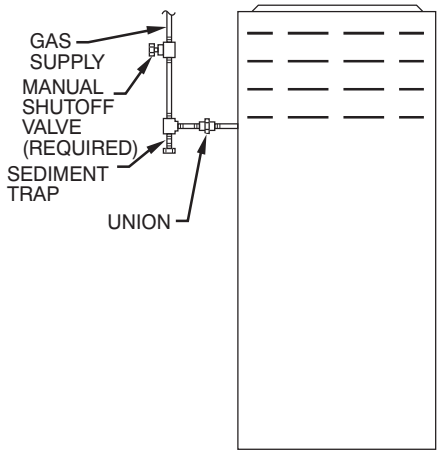

A02035

Fig. 22 – Typical Gas Pipe Arrangement

Piping should be pressure and leak tested in accordance with the current addition of the NFGC in the United States, local, and national plumbing and gas codes before the furnace has been connected. After all connections have been made, purge lines and check for leakage at furnace prior to operating furnace.

If pressure exceeds 0.5 psig (14-in. w.c.), gas supply pipe must be disconnected from furnace and capped before and during supply pipe pressure test. If test pressure is equal to or less than 0.5 psig (14-in. w.c.), turn off electric shutoff switch located on furnace gas control valve and accessible manual equipment shutoff valve before and during supply pipe pressure test. After all connections have been made, purge lines and check for leakage at furnace prior to operating furnace.

The gas supply pressure shall be within the maximum and minimum inlet supply pressures marked on the rating plate with the furnace burners ON and OFF.

ELECTRICAL CONNECTIONS

See Fig. 25 for field wiring diagram showing typical field 115-v wiring. Check all factory and field electrical connections for tightness.

Field-supplied wiring shall conform with the limitations of 63°F (33°C) rise.

⚠ WARNING

ELECTRICAL SHOCK, FIRE OR EXPLOSION HAZARD

Failure to follow safety warnings could result in dangerous operation, serious injury, death or property damage.

Improper servicing could result in dangerous operation, serious injury, death or property damage.

- Before servicing, disconnect all electrical power to furnace.
- When servicing controls, label all wires prior to disconnection. Reconnect wires correctly.
- Verify proper operation after servicing.

⚠ WARNING

ELECTRICAL SHOCK HAZARD

Failure to follow this warning could result in personal injury or death.

Blower access panel door switch opens 115-v power to control. No component operation can occur. Do not bypass or close switch with panel removed.

⚠ WARNING

ELECTRICAL SHOCK AND FIRE HAZARD

Failure to follow this warning could result in personal injury, death, or property damage.

The cabinet **MUST** have an uninterrupted or unbroken ground according to NEC NFPA 70 or local codes to minimize personal injury if an electrical fault should occur. This may consist of electrical wire, conduit approved for electrical ground or a listed, grounded power cord (where permitted by local code) when installed in accordance with existing electrical codes. Refer to the power cord manufacturer's ratings for proper wire gauge. Do not use gas piping as an electrical ground.

⚠ CAUTION

FURNACE MAY NOT OPERATE HAZARD

Failure to follow this caution may result in intermittent furnace operation.

Furnace control must be grounded for proper operation or else control will lock out. Control must remain grounded through green/yellow wire routed to gas valve and manifold bracket screw.

115-V WIRING

Verify that the voltage, frequency, and phase correspond to that specified on unit rating plate. Also, check to be sure that service provided by utility is sufficient to handle load imposed by this equipment. Refer to rating plate or Table 5 for equipment electrical specifications.

U.S. Installations: Make all electrical connections in accordance with National Electrical Code (NEC) NFPA 70 and any local codes or ordinances that might apply.

Use a separate, fused branch electrical circuit with a properly sized fuse or circuit breaker for this furnace. See Table 5 for wire size and fuse specifications. A readily accessible means of electrical disconnect must be located within sight of the furnace.

NOTE: Proper polarity must be maintained for 115-v wiring. If polarity is incorrect, control LED status indicator light will show rapidly and furnace will NOT operate.

⚠ WARNING

FIRE HAZARD

Failure to follow this warning could result in personal injury, death, or property damage.

Do not connect aluminum wire between disconnect switch and furnace. Use only copper wire, see Fig. 23.

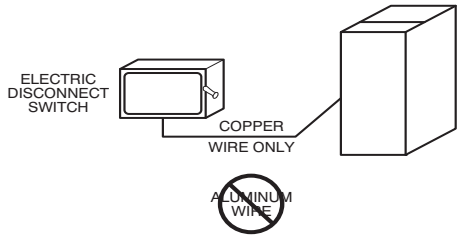

A190279

Fig. 23 – Copper Wire Only

J-BOX RELOCATION

NOTE: If factory location of J-Box is acceptable, go to next section (ELECTRICAL CONNECTION to J-Box).

NOTE: On 14-in. (356 mm) wide casing models, the J-Box shall not be relocated to other side of furnace casing when the vent pipe is routed within the casing.

1. Remove and save two screws holding J-Box, see Fig. 24.

NOTE: The J-Box cover need not be removed from the J-Box in order to move the J-Box. Do NOT remove green ground screw inside J-Box, see Fig. 24.

2. Cut wire tie on loop in furnace wires attached to J-Box.
3. Move J-Box to desired location.
4. Fasten J-Box to casing with the two screws removed in Step 1.
5. Route J-Box wires within furnace away from sharp edges, rotating parts and hot surfaces.

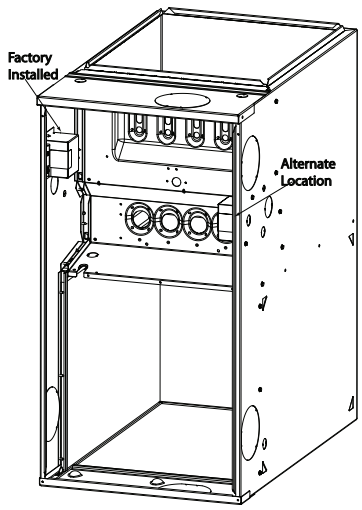

A10291

Fig. 24 – Relocating J-Box

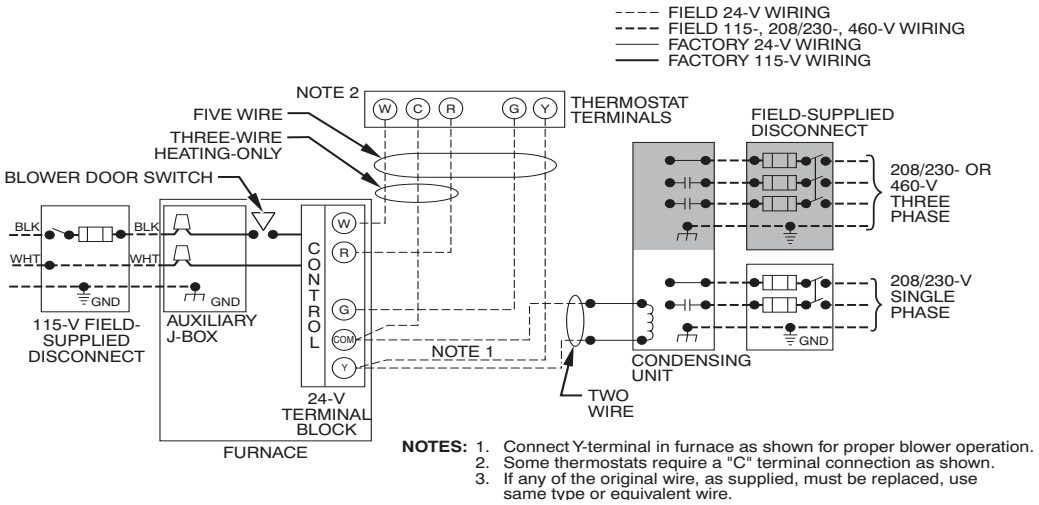

Fig. 25 – Field Wiring Diagram

Electrical Connection to J-Box Electrical Box on Furnace Casing Side

WARNING

FIRE OR ELECTRICAL SHOCK HAZARD

Failure to follow this warning could result in personal injury, death, or property damage.

If field-supplied manual disconnect switch is to be mounted on furnace casing side, select a location where a drill or fastener cannot damage electrical or gas components.

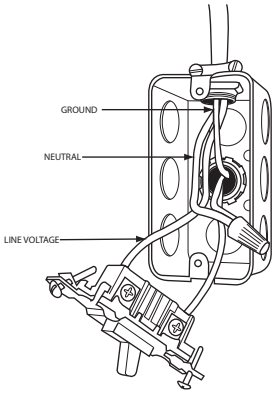

Fig. 26 – Field-Supplied Electrical Box on Furnace Casing

1. Select and remove a hole knockout in the casing where the electrical box is to be installed.

NOTE: Check that duct on side of furnace will not interfere with installed electrical box.

2. Remove the desired electrical box hole knockout and position the hole in the electrical box over the hole in the furnace casing.
3. Fasten the electrical box to casing by driving two field-supplied screws from inside electrical box into casing steel.
4. Remove and save two screws holding J-Box, see Fig. 24.
5. Pull furnace power wires out of 1/2-in. (12 mm) diameter hole in J-Box. Do not loosen wires from strain-relief wire-tie on outside of J-Box.
6. Route furnace power wires through holes in casing and electrical box and into electrical box.
7. Pull field power wires into electrical box.Remove cover from furnace J-Box.
8. Route field ground wire through holes in electrical box and casing, and into furnace J-Box.
9. Reattach furnace J-Box to furnace casing with screws removed in Step 4.
10. Secure field ground wire to J-Box green ground screw.
11. Complete electrical box wiring and installation. Connect line voltage leads, see Fig. 26. Use best practices (NEC in U.S. for wire bushings, strain relief, etc.
12. Reinstall cover to J-Box. Do not pinch wires between cover and bracket.

Table 5 – Electrical Data

FURNACE SIZE	VOLTS - HERTZ - PHASE	OPERATING VOLTAGE RANGE*		UNIT AMPACITY†	MAX WIRE LENGTH FT (M)‡	MAX. FUSE OR CKT. BKR AMPS**†	MIN. WIRE GAUGE
		Max.	Min.				
36045V14	115-60-1	127	104	10.7	34 (10.6)	15	14
48045V17	115-60-1	127	104	10.7	34 (10.6)	15	14
48070V17	115-60-1	127	104	14.3	25 (7.9)	15	14
60070V21	115-60-1	127	104	17.3	33 (10.1)	20	12
60090V21	115-60-1	127	104	14.6	25 (7.7)	15	14
60090V24	115-60-1	127	104	14.6	25 (7.7)	15	14
66110V24	115-60-1	127	104	18.1	31 (9.7)	20	12

*. Permissible limits of the voltage range at which the unit operates satisfactorily.
†. Unit ampacity = 125 percent of largest operating component's full load amps plus 100 percent of all other potential operating components' (EAC, humidifier, etc.) full load amps.
‡. Length shown is as measured 1 way along wire path between furnace and service panel for maximum 2 percent voltage drop.
**. Time-delay type is recommended.

Power Cord Installation in Furnace J-Box

NOTE: Power cords must be able to handle the electrical requirements listed in Table 5. Refer to power cord manufacturer's listings.

1. Remove cover from J-Box.
2. Route listed power cord through 7/8-in. (22 mm) diameter hole in J-Box.
3. Secure power cord to J-Box bracket with a strain relief bushing or a connector approved for the type of cord used.
4. Secure field ground wire to green ground screw on J-Box bracket.
5. Connect line voltage leads, see Fig. 25.
6. Reinstall cover to J-Box. Do not pinch wires between cover and bracket.

BX Cable Installation in Furnace J-Box

1. Remove cover from J-Box.
2. Route BX cable into 7/8-in. (22 mm) diameter hole in J-Box.
3. Secure BX cable to J-Box bracket with connectors approved for the type of cable used.
4. Secure field ground wire to green ground screw on J-Box bracket.
5. Connect line voltage leads, see Fig. 25.
6. Reinstall cover to J-Box. Do not pinch wires between cover and bracket.

24-V Wiring

Make field 24-v connections at the 24-v terminal strip, see Fig. 25 - Fig. 27. Connect terminal Y/Y2 as shown in Fig. 28 for proper cooling operation. Use only AWG No. 18, color-coded, copper thermostat wire.

The 24-v circuit contains an automotive-type, 3-amp. fuse located on the control. Any direct shorts during installation, service, or maintenance could cause this fuse to blow. If fuse replacement is required, use ONLY a 3-amp. fuse of identical size.

ACCESSORIES

1. Electronic Air Cleaner (EAC)
   Connect an accessory Electronic Air Cleaner (if used) using 1/4-in female quick connect terminals to the two male 1/4-in quick-connect terminals on the control board marked EAC-1 and EAC-2. The terminals are rated for 115VAC, 1.0 amps maximum and are energized during blower motor operation, see Fig. 27.
2. Humidifier (HUM)
   Connect an accessory 24 VAC, 0.5 amp. maximum humidifier (if used) to the 1/4-in male quick-connect HUM terminal and COM-24V screw terminal on the control board thermostat strip. The HUM terminal is energized when blower is energized in heating, see Fig. 27.

NOTE: DO NOT connect furnace control HUM terminal to HUM (humidifier) terminal on Thermidistat©, Zone Controller or similar device. See Thermidistat, Zone Controller, thermostat, or controller manufacturer's instructions for proper connection.

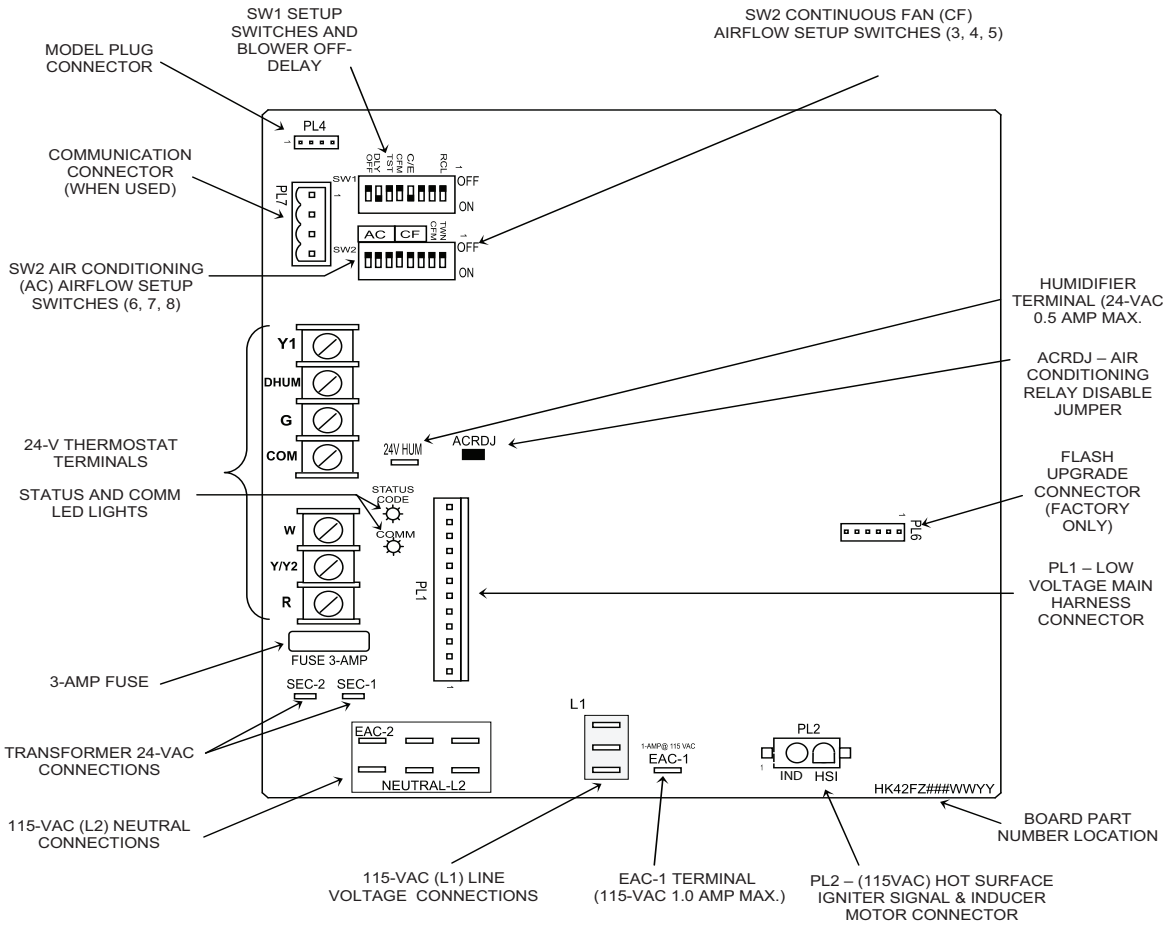

Fig. 27 – Variable Speed ECM Blower Motor

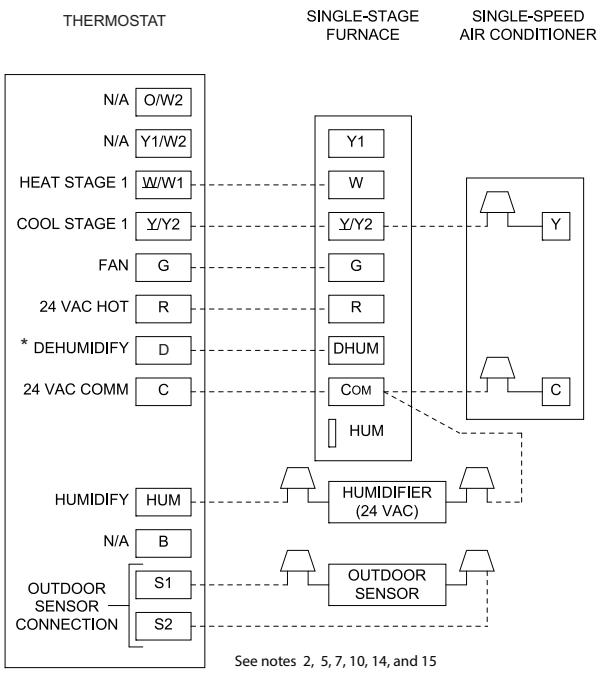

Single-Stage Furnace with Single-Speed Air Conditioner

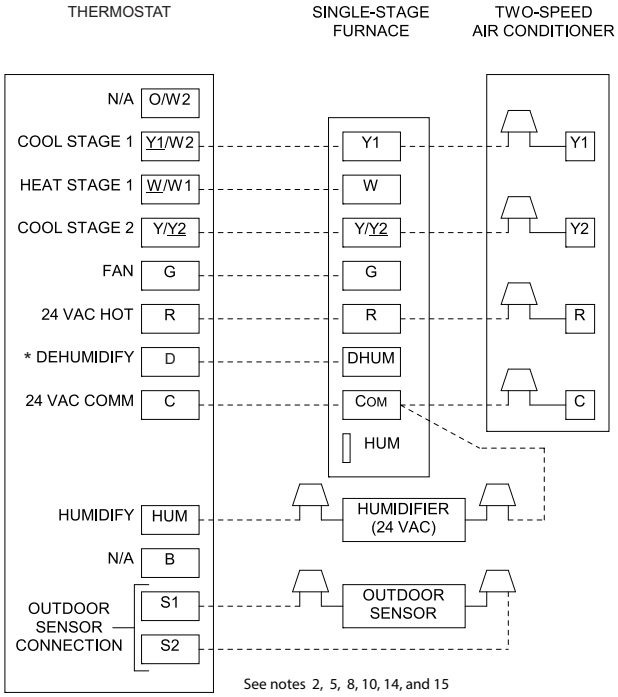

Single-Stage Furnace with Two-Speed Air Conditioner

A12223A

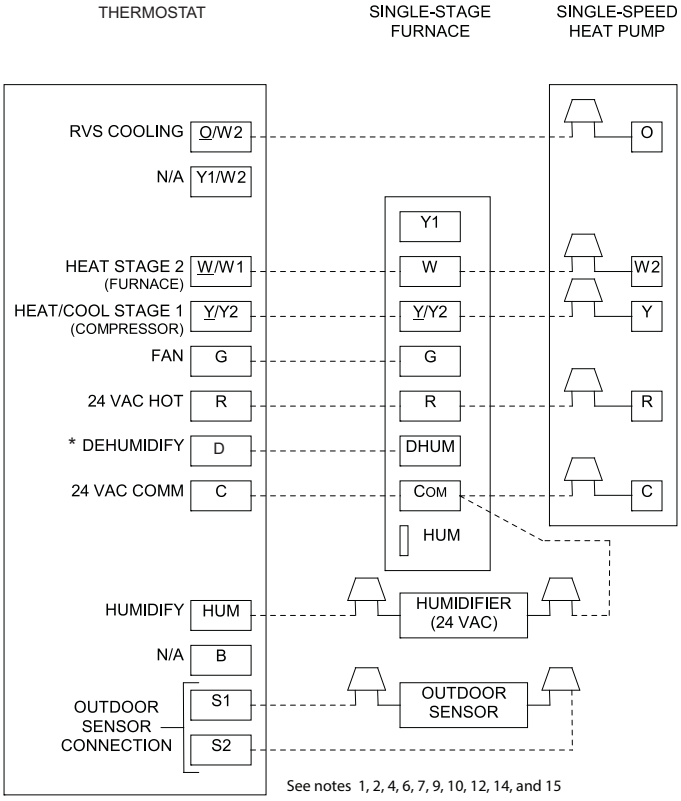

Single-Stage Furnace with Single-Speed Heat Pump

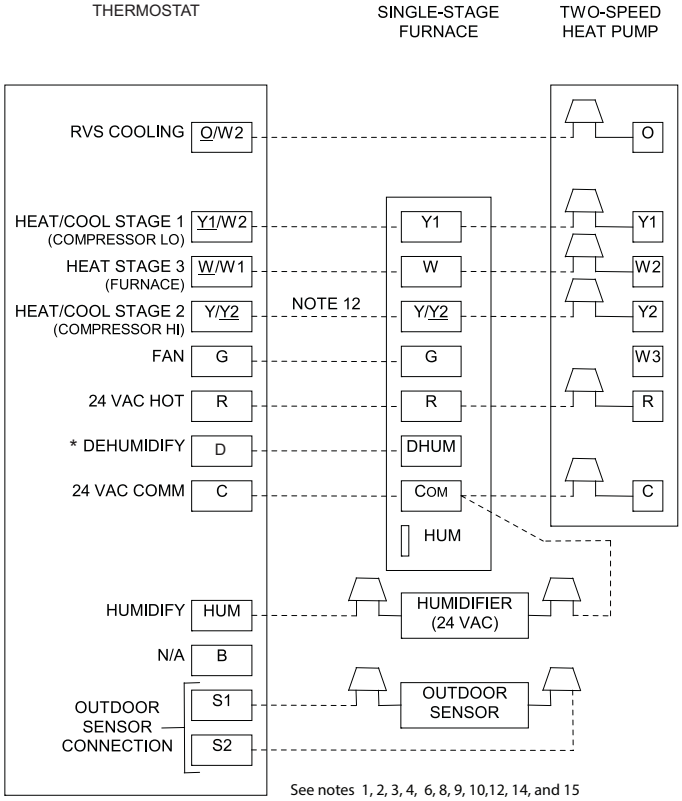

Single-Stage Furnace with Two-Speed Heat Pump

A12223B

Fig. 28 – Thermostat Wiring Diagrams

NOTES FOR THERMOSTAT WIRING DIAGRAMS

1. Heat pump **MUST** have a high pressure switch for HYBRID HEAT® dual fuel applications.
2. Refer to outdoor equipment Installation Instructions for additional information and setup procedure.
3. If the heat pump date code is 1501E or earlier, select the "ZONE" position on the two speed heat pump control. Heat pumps with date code 1601E and later do not have or require a "ZONE" selection.
4. Outdoor Air Temperature Sensor must be attached in all HYBRID HEAT® dual fuel applications.
5. Configure the thermostat for air conditioner installations. Refer to thermostat instructions.
6. Configure thermostat for heat pump installations. Refer to thermostat instructions.
7. Configure thermostat for single-stage compressor operation. Refer to thermostat instructions.
8. Configure thermostat for HYBRID HEAT® dual fuel operation. Refer to thermostat instructions.
9. NO connection should be made to the furnace HUM terminal when using a thermostat with a 24-volt humidifier output.
10. The RVS Sensing terminal "L" should not be connected. This is used internally to sense defrost operation.
11. If thermostat has internal control of heat pump balance point, DO NOT SELECT the "FURNACE INTERFACE" or "BALANCE POINT" option on the two-speed heat pump control board. Refer to thermostat instructions.
12. Thermostat signals may vary. Consult thermostat installation instructions for more information.

VENTING

The furnace shall be connected to a listed factory built chimney or vent, or a clay-tile lined masonry or concrete chimney. Venting into an unlined masonry chimney or concrete chimney is prohibited.

When an existing Category I furnace is removed or replaced, the original venting system, may no longer be sized to properly vent the attached appliances. An improperly sized Category I venting system could cause the formation of condensate in the furnace and vent, leakage of condensate and combustion products, and spillage of combustion products into the living space.

Vent system or vent connectors may need to be resized. Vent systems or vent connectors must be sized to approach minimum size as determined using appropriate table found in the current edition of NFGC.

GENERAL VENTING REQUIREMENTS

Follow all safety codes for proper vent sizing and installation requirements, including local building codes, the National Fuel Gas Code NFPA 54/ANSI Z223.1 (NFGC), Parts 12 and 13 in the United States, the local building codes, and furnace and vent manufacturers' instructions.

These furnaces are design-certified as Category I furnaces in accordance with ANSI Z21.47/CSA 2.3 and operate with a non-positive vent static pressure to minimize the potential for vent gas leakage. Category I furnaces operate with a flue loss not less than 17% to minimize the potential for condensation in the venting system. These furnaces are approved for common venting and multi-story venting with other fan assisted or draft hood equipped appliances in accordance with the NFCG, local building codes, and furnace and vent manufacturers' instructions.

The following information and warning must be considered in addition to the requirements defined in the NFGC.

⚠ WARNING

CARBON MONOXIDE POISONING HAZARD

Failure to follow this warning could result in personal injury or death. Do not bypass the draft safeguard switch, as an unsafe condition could exist which must be corrected.

1. If a vent (common or dedicated) becomes blocked, the furnace will be shut off by the draft safeguard switch located on the vent elbow.
2. Do not vent this Category I furnace into a single wall dedicated or common vent. The dedicated or common vent is considered to be the vertical portion of the vent system that terminates outdoors.
3. Vent connectors serving Category I furnaces shall not be connected into any portion of a mechanical draft system operating under positive pressure.
4. Do not vent this appliance with any solid fuel burning appliance.
5. Category I furnaces must be vented vertically or nearly vertically unless equipped with a listed mechanical venter. See SIDEWALL VENTING section.
6. Do not vent this appliance into an unlined masonry chimney. (Refer to Chimney Inspection Chart, Fig. 29).

⚠ WARNING

CARBON MONOXIDE POISONING HAZARD

Failure to follow the steps outlined below for each appliance connected to the venting system being placed into operation could result in carbon monoxide poisoning or death.

The following steps shall be followed for each appliance connected to the venting system being placed into operation, while all other appliances connected to the venting system are not in operation:

1. Seal any unused openings in venting system.
2. Inspect the venting system for proper size and horizontal pitch, as required in the National Fuel Gas Code, NFPA 54/ANSI Z223.1 and these instructions. Determine that there is no blockage or restriction, leakage, corrosion and other deficiencies, which could cause an unsafe condition.
3. As far as practical, close all building doors and windows and all doors between the space in which the appliance(s) connected to the venting system are located and other spaces of the building.
4. Close fireplace dampers.
5. Turn on clothes dryers and any appliance not connected to the venting system. Turn on any exhaust fans, such as range hoods and bathroom exhausts, so they are operating at maximum speed. Do not operate a summer exhaust fan.
6. Follow the lighting instructions. Place the appliance being inspected into operation. Adjust the thermostat so appliance is operating continuously.
7. Test for spillage from draft hood equipped appliances at the draft hood relief opening after 5 minutes of main burner operation. Use the flame of a match or candle.
8. If improper venting is observed during any of the above tests, the venting system must be corrected in accordance with the National Fuel Gas Code, NFPA 54/ANSI Z223.1.
9. After it has been determined that each appliance connected to the venting system properly vents when tested as outlined above, return doors, windows, exhaust fans, fireplace dampers and any other gas-fired burning appliance to their previous conditions of use.

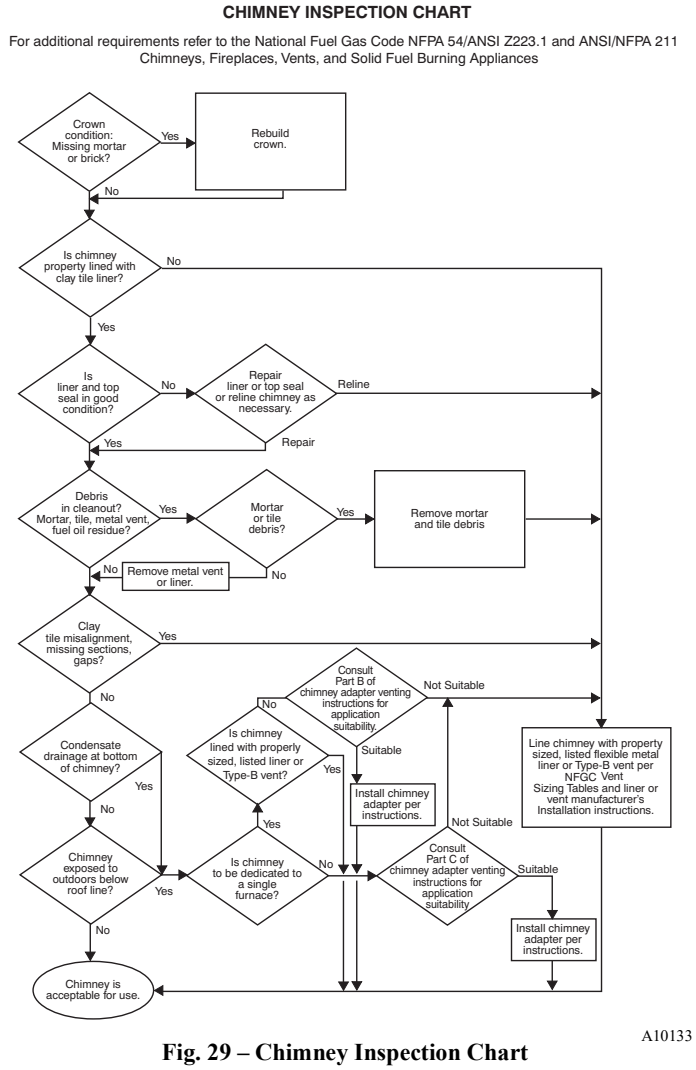

Fig. 29 – Chimney Inspection Chart

Masonry Chimney Requirement

NOTE: These furnaces are CSA design-certified for use in exterior tile-lined masonry chimneys with a factory accessory Chimney Adapter Kit. Refer to the furnace rating plate for correct kit usage. The Chimney Adapter Kits are for use with ONLY furnaces having a Chimney Adapter Kit number marked on the furnace rating plate.

If a clay tile-lined masonry chimney is being used and it is exposed to the outdoors below the roof line, relining might be required. Chimneys shall conform to the Standard for Chimneys, Fireplaces, Vents, and Solid Fuel Burning Appliances ANSI/NFPA 211 in the United States and must be in good condition.

U.S.A. - Refer to Sections 13.1.8 and 13.2.20 of the NFPA 54/ANSI Z223.1 or the authority having jurisdiction to determine whether relining is required. If relining is required, use a properly sized listed metal liner, Type-B vent, or a listed alternative venting design.

NOTE: See the NFPA 54/ANSI Z223.1 13.1.9 and 13.2.20 regarding alternative venting design and the exception, which cover installations such as our Chimney Adapter Kits which are listed for use with these furnaces. See Product Data Sheet for accessory listing.

The Chimney Adapter Kit is a listed alternative venting system for these furnaces. See the kit instructions for complete details.

This furnace is permitted to be vented into a clay tile-lined masonry chimney that is exposed to the outdoors below the roof line, provided:

1. Vent connector is Type-B double-wall, and
2. This furnace is common vented with at least 1 draft hood equipped appliance, and
3. The combined appliance input rating is less than the maximum capacity given in Table 7, and
4. The input rating of each space heating appliance is greater than the minimum input rating given in Table 6 for the local 99% Winter Design Temperature. Chimneys having internal areas greater than 38 sq. in. (24516 sq. mm) require furnace input ratings greater than the input ratings of these furnaces. See footnote at bottom of Table 6, and
5. The authority having jurisdiction approves.

Table 6 – Minimum Allowable Input Rating of Space-Heating Appliance in Thousands of BTUh per Hour

VENT HEIGHT FT. (M)	INTERNAL AREA OF CHIMNEY SQ. IN. (SQ. MM)			
	12 (7741)	19 (12258)	28 18064)	38 (24516)
Local 99% Winter Design Temperature: 17 to 26 degrees F				
6	0	55	99	141
8	52	74	111	154
10	NR	90	125	169
15	NR	NR	167	212
20	NR	NR	212	258
30	NR	NR	NR	362
Local 99% Winter Design Temperature: 5 to 16 degrees F*				
6	NR	78	121	166
8	NR	94	135	182
10	NR	111	149	198
15	NR	NR	193	247
20	NR	NR	NR	293
30	NR	NR	NR	377
Local 99% Winter Design Temperature: -10 to 4 degrees F*				
6	NR	NR	145	196
8	NR	NR	159	213
10	NR	NR	175	231
15	NR	NR	NR	283
20	NR	NR	NR	333
30	NR	NR	NR	NR
Local 99% Winter Design Temperature: -11 degrees F or lower				
Not recommended for any vent configuration.				

*The 99.6% heating (db) temperatures found in the 1997 or 2001 ASHRAE Fundamentals Handbook, Climatic Design Information chapter, Table 1A (United States) and 2A (Canada) or the 2005 ASHRAE Fundamentals handbook, Climatic Design Information chapter, and the CD-ROM included with the 2005 ASHRAE Fundamentals Handbook.

If all of these conditions cannot be met, an alternative venting design shall be used, such as the listed chimney adapter kit with a furnace listed for use with the kit, a listed chimney-lining system, or a Type-B common vent.

Inspections before the sale and at the time of installation will determine the acceptability of the chimney or the need for repair and/or (re)lining. Refer to the Fig. 29 to perform a chimney inspection. If the inspection of a previously used tile-lined chimney:

a. Shows signs of vent gas condensation, the chimney should be relined in accordance with local codes and the authority having jurisdiction. The chimney should be relined with a listed metal liner, Type-B vent, or a listed chimney adapter kit shall be used to reduce condensation. If a condensate drain is required by local code, refer to the NFPA 54/ANSI Z223.1, Section 12.10 for additional information on condensate drains.

b. Indicates the chimney exceeds the maximum permissible size in the tables, the chimney should be rebuilt or relined to conform to the requirements of the equipment being installed and the authority having jurisdiction.

A chimney without a clay tile liner, which is otherwise in good condition, shall be rebuilt to conform to ANSI/NFPA 211 or be lined with a UL listed metal liner or UL listed Type-B vent. Relining with a listed metal liner or Type-B vent is considered to be a vent-in-a-chase.

If a metal liner or Type-B vent is used to line a chimney, no other appliance shall be vented into the annular space between the chimney and the metal liner.

EXTERIOR MASONRY CHIMNEY FAN + NAT INSTALLATIONS WITH TYPE-B DOUBLE-WALL VENT CONNECTORS ©NFPA & AGA

Table 7 – Combined Appliance Maximum Input Rating in Thousands of BTUh per Hour

VENT HEIGHT FT (M)	INTERNAL AREA OF CHIMNEY SQ. IN. (SQ. MM)			
	12 (7741)	19 (12258)	28 (18064)	38 (24516)
6 (1.8)	74	119	178	257
8 (2.4)	80	130	193	279
10 (3.0)	84	138	207	299
15 (4.5)	NR	152	233	334
20 (6.0)	NR	NR	250	368
30 (9.1)	NR	NR	NR	404

Appliance Application Requirements

Appliance operation has a significant impact on the performance of the venting system. If the appliances are sized, installed, adjusted, and operated properly, the venting system and/or the appliances should not suffer from condensation and corrosion. The venting system and all appliances shall be installed in accordance with applicable listings, standards, and codes.

The furnace should be sized to provide 100 percent of the design heating load requirement plus any margin that occurs because of furnace model size capacity increments. Heating load estimates can be made using approved methods available from Air Conditioning Contractors of America (Manual J); American Society of Heating, Refrigerating, and Air-Conditioning Engineers; or other approved engineering methods. Excessive oversizing of the furnace could cause the furnace and/or vent to fail prematurely.

When a metal vent or metal liner is used, the vent must be in good condition and be installed in accordance with the vent manufacturer's instructions.

To prevent condensation in the furnace and vent system, the following precautions must be observed:

1. The return-air temperature must be at least 60°F db except for brief periods of time during warm-up from setback at no lower than 55°F (13°C) db or during initial start-up from a standby condition.
2. Adjust the gas input rate per the installation instructions. Low gas input rate causes low vent gas temperatures, causing condensation and corrosion in the furnace and/or venting system. Derating is permitted only for altitudes above 2000 Ft. (610 M).
3. Adjust the air temperature rise to the midpoint of the rise range or slightly above. Low air temperature rise can cause low vent gas temperature and potential for condensation problems.
4. Set the thermostat heat anticipator or cycle rate to reduce short cycling.

⚠ CAUTION

BURN HAZARD

Failure to follow this caution may result in personal injury.

Hot vent pipe is within reach of small children when installed in downflow position.

See the following instruction.

Air for combustion must not be contaminated by halogen compounds which include chlorides, fluorides, bromides, and iodides. These compounds are found in many common home products such as detergent, paint, glue, aerosol spray, bleach, cleaning solvent, salt, and air freshener, and can cause corrosion of furnaces and vents. Avoid using such products in the combustion-air supply. Furnace use during construction of the building could cause the furnace to be exposed to halogen compounds, causing premature failure of the furnace or venting system due to corrosion.

Vent dampers on any appliance connected to the common vent can cause condensation and corrosion in the venting system. Do not use vent dampers on appliances common vented with this furnace.

Additional Venting Requirements

A 4-in. (102 mm) round vent elbow is supplied with the furnace. A 5-in. (127 mm) or 6- in. (152 mm) vent connector may be required for some model furnaces. A field-supplied 4-in. (102 mm) to 5-in. (127 mm) or 4-in. (102 mm) to 6-in. (152 mm) sheet metal increaser fitting is required when 5-in. (127 mm) or 6-in. (152 mm) vent connector is used. Refer to Table 8 to determine the minimum vertical vent height for various furnace and vent orientations. See Fig. 30 - Fig. 43 Venting Orientation for approved vent configurations.

NOTE: Vent connector length for connector sizing starts at furnace vent elbow. The 4-in. (102 mm) vent elbow is shipped for upflow configuration and may be rotated for other positions. Remove the three screws that secure vent elbow to furnace, rotate furnace vent elbow to position desired, reinstall screws. The factory-supplied vent elbow does NOT count as part of the number of vent connector elbows.

The vent connector can exit the furnace through one of five locations on the casing.

⚠ CAUTION

CUT HAZARD

Failure to follow this caution may result in personal injury.

Sheet metal parts may have sharp edges or burrs. Use care and wear appropriate protective clothing, safety glasses and gloves when handling parts, and servicing furnaces.

1. Attach the single wall vent connector to the furnace vent elbow, and fasten the vent connector to the vent elbow with at least two field-supplied, corrosion-resistant, sheet metal screws located 180° apart.

NOTE: An accessory flue extension is available to extend from the furnace elbow to outside the furnace casing. See Product Data Sheet for accessory listing. If flue extension is used, fasten the flue extension to the vent elbow with at least two field-supplied, corrosion-resistant, sheet metal screws located 180° apart. Fasten the vent connector to the flue extension with at least two field-supplied, corrosion resistant sheet metal screws located 180° apart.

2. Vent the furnace with the appropriate connector, see Fig. 30 - Fig. 42.
3. Determine the correct location of the knockout to be removed.

4. Use a hammer and screwdriver to strike a sharp blow between the tie points and work the slug back and forth until the slug breaks free.

An accessory Vent Guard Kit is REQUIRED for downflow applications for use where the vent exits through the lower portion of the furnace casing. Refer to the Vent Guard Kit Instructions for complete details. See Product Data Sheet for accessory listing.

The horizontal portion of the venting system shall slope upwards not less than 1/4-in. per linear ft. (21 mm/m) from the furnace to the vent and shall be rigidly supported every 5 ft. (1.5 M) or less with metal hangers or straps to ensure there is no movement after installation.

Sidewall Venting

This furnace is not approved for direct sidewall horizontal venting.

Per section 12.4.3 of the NFPA 54/ANSI Z223.1, any listed mechanical venter may be used, when approved by the authority having jurisdiction.

Select the listed mechanical venter to match the BTUh input of the furnace being vented. Follow all manufacturer's installation requirements for venting and termination included with the listed mechanical venter.

Caution!! For the following applications, use the minimum vertical heights as specified below. For all other applications, follow exclusively the National Fuel Gas Code.

Table 8 – Recommended Minimum Vent Height Per Furnace and Vent Orientation

FURNACE ORIENTATION	VENT ORIENTATION	FURNACE INPUT (BTUH/HR)	MIN. VENT DIAMETER IN. (mm)*	MIN. VERTICAL VENT HEIGHT FT. (M)**
Downflow	Vent elbow up then left Fig. 32	110,000	5 (127)	10 (3.0)
Downflow	Vent elbow left, then up Fig. 34	110,000	5 (127)	12 (3.6)
Downflow	Vent elbow up, then right Fig. 35	110,000	5 (127)	10 (3.0)

NOTE: All vent configurations must also meet National Fuel Gas Code venting requirements NFGC.
*4-in. (102 mm) inside casing or vent guard
**Including 4 in. (102 mm) vent section(s)

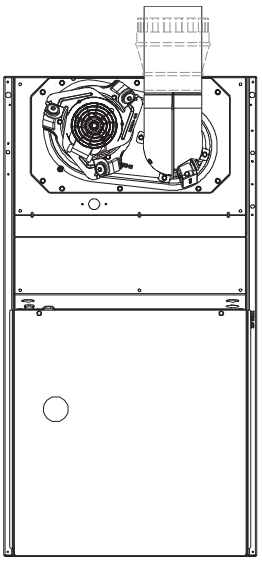

SEE NOTES: 1,2,4,7,8,9 on the page following these figures

A03208

Fig. 30 – Upflow Application - Vent Elbow Up

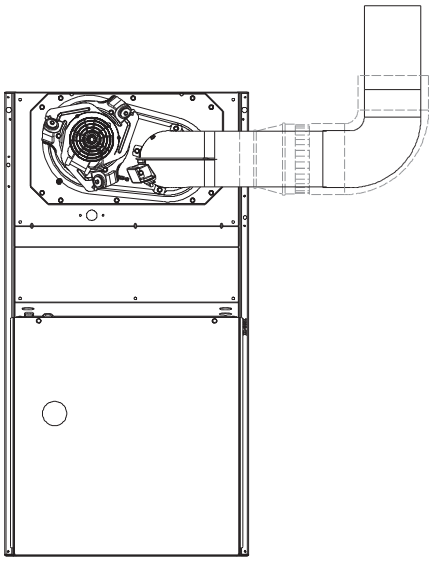

SEE NOTES: 1,2,3,4,7,8,9 on the pages following these figures

A03209

Fig. 31 – Upflow Application - Vent Elbow Right

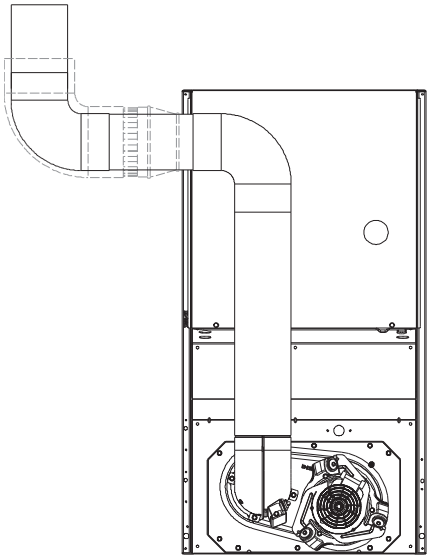

SEE NOTES:1,2,3,4,5,7,8,9
on the page following
these figures

A03210

Fig. 32 – Downflow Application - Vent Elbow Up then Left

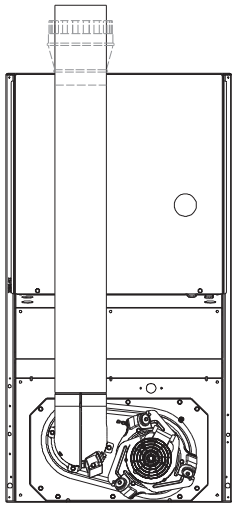

SEE NOTES: 1,2,4,5,7,8,9
on the page following
these figures

A03211

Fig. 33 – Downflow Application - Vent Elbow Up

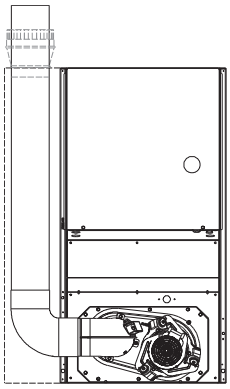

SEE NOTES: 1,2,4,5,6,7,8,9
on the page following these figures

A03207

Fig. 34 – Downflow Application - Vent Elbow Left then Up

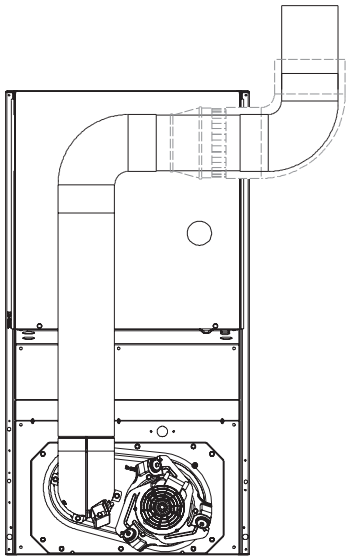

SEE NOTES:1,2,3,4,5,7,8,9
on the page following
these figures.

A03212

Fig. 35 – Downflow Application - Vent Elbow Up then Right

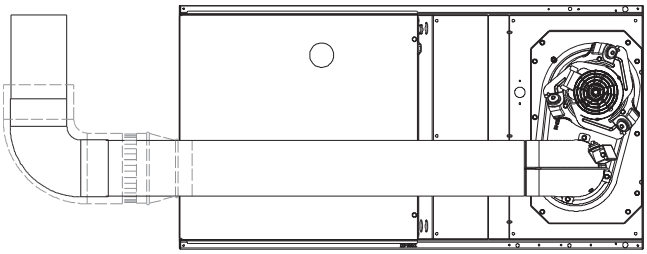

SEE NOTES: 1,2,4,5,7,8,9

A02068

Fig. 36 – Horizontal Right Application - Vent Elbow Left

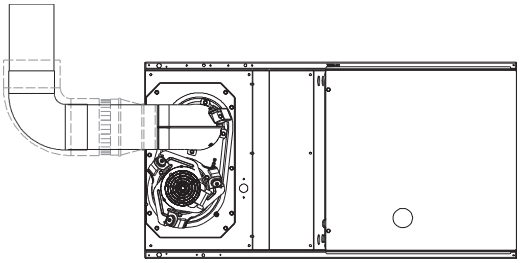

SEE NOTES: 1,2,4,7,8,9 on the page
following these figures

A03213

Fig. 37 – Horizontal Left Application - Vent Elbow Left

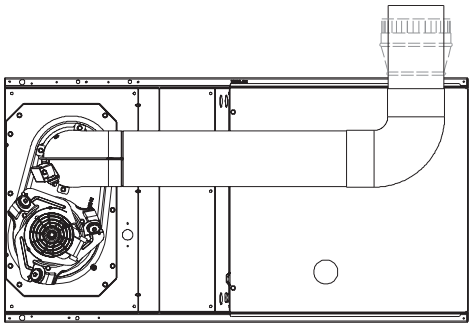

SEE NOTES: 1,2,4,5,7,8,9 on the page following these figures

A03214

Fig. 38 – Horizontal Left Application - Vent Elbow Right then Up

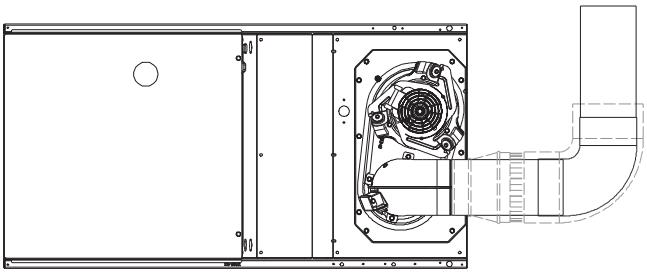

SEE NOTES: 1,2,4,7,8,9 on the page following these figures

A03218

Fig. 39 – Horizontal Right Application-Vent Elbow Right

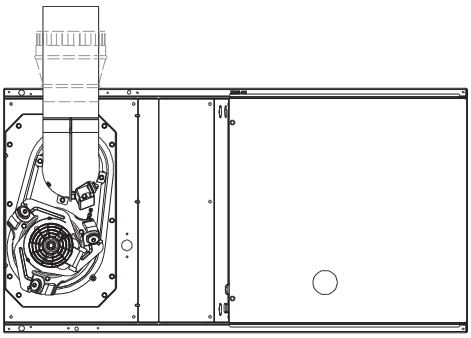

SEE NOTES: 1,2,4,5,7,8,9 on the page following these figures

A03215

Fig. 40 – Horizontal Left Application - Vent Elbow Up

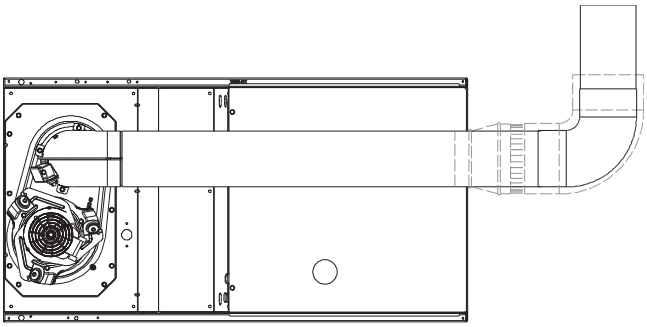

SEE NOTES: 1,2,4,5,7,8,9 on the page following these figures

A03216

Fig. 41 – Horizontal Left Application - Vent Elbow Right

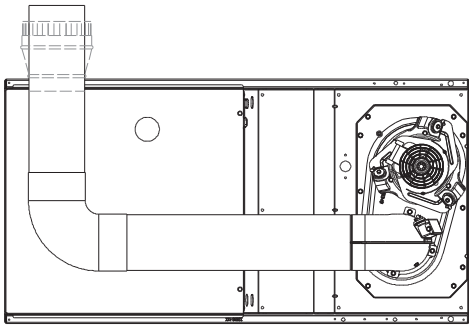

SEE NOTES: 1,2,4,5,7,8,9 on the page following these figures

A03219

Fig. 42 – Horizontal Right Application - Vent Elbow Left then Up

Venting Notes for Fig. 31 - Fig. 42

1. For common vent, vent connector sizing and vent material: United States-use the NFGC.
2. Immediately increase to 5-in. (102 mm) or 6-in. (152 mm) vent connector outside furnace casing when 5-in. (127 mm) vent connector is required, refer to Note 1 above.
3. Side outlet vent for upflow and downflow installations must use Type B vent immediately after exiting the furnace, except when factory-approved Downflow Vent Guard Kit is used in the downflow position. See Product Data Sheet for accessory listing.
4. Type-B vent where required, refer to Note 1 above.
5. A 4-in.(102 mm) single-wall (26 ga. min.) vent must be used inside furnace casing and when the factory-approved Downflow Vent Guard Kit is used external to the furnace. See Product Data Sheet for accessory listing.
6. Accessory Downflow Vent Guard Kit required in downflow installations with lower vent configuration. See Product Data Sheet for accessory listing.
7. Chimney Adapter Kit may be required for exterior masonry chimney applications. Refer to Chimney Adapter Kit for sizing and complete application details. See Product Data Sheet for accessory listing.
8. Secure vent connector to furnace elbow with (2) corrosion-resistant sheet metal screws, spaced approximately 180° apart.
9. Secure all other single wall vent connector joints with (3) corrosion resistant screws spaced approximately 120° apart. Secure Type-B vent connectors per vent connector manufacturer's recommendations.

START-UP, ADJUSTMENT, AND SAFETY CHECK

⚠ WARNING

FIRE HAZARD

Failure to follow this warning could result in personal injury, death or property damage.

This furnace is equipped with manual reset limit switches in the gas control area. The switches open and shut off power to the gas valve, if a flame rollout or overheating condition occurs in the gas control area. DO NOT bypass the switches. Correct problem before resetting the switches.

GENERAL

1. Maintain 115-v wiring and ground. Improper polarity will result in showing status code 10 and no furnace operation.
2. Make thermostat wire connections at the 24-v terminal block on the furnace control. Failure to make proper connections will result in improper operation, see Fig. 25 - Fig. 27.
3. Gas supply pressure to the furnace must be greater than 4.5-in. w.c. (0.16 psig) but not exceed 14-in. w.c. (0.5 psig).
4. Check all manual-reset switches for continuity.
5. Replace blower compartment door. Door must be in place to operate furnace.
6. Setup switch descriptions. The variable speed furnace control has DIP switches to select thermostat staging, blower off delay timings, air flow selection and other operational or service related functions, see Fig. 27 and Fig. 44 and Fig. 45.

⚠ CAUTION

CUT HAZARD

Failure to follow this caution may result in personal injury.

Sheet metal parts may have sharp edges or burrs. Use care and wear appropriate protective clothing, safety glasses and gloves when handling parts, and servicing furnaces.

Start-Up Procedures

⚠ WARNING

FIRE OR EXPLOSION HAZARD

Failure to follow this warning could result in personal injury, death, and/or property damage.

Never purge a gas line into a combustion chamber. Never test for gas leaks with an open flame. Use a commercially available soap solution made specifically for the detection of leaks to check all connections. A fire or explosion may result causing property damage, personal injury or loss of life.

1. Purge gas lines after all connections have been made.
2. Check gas lines for leaks.

⚠ WARNING

ELECTRICAL SHOCK HAZARD

Failure to follow this warning could result in personal injury, or death.

Blower access door switch opens 115-v power to control. No component operation can occur unless switch is closed. Caution must be taken when manually closing this switch for service purposes.

3. To Begin Component Self-Test:
   a. Remove Blower Access Door.
   b. Disconnect the thermostat R lead from furnace control board.
   c. Manually close blower door switch.
   d. Turn Setup DIP switch SW1-6 ON, see Fig. 27 and Fig. 44 and Fig. 45.

NOTE: The furnace control allows all components, except the gas valve, to be run for short period of time. This feature helps diagnose a system problem in case of a component failure. Component test feature will not operate if any thermostat signal is present at the control.
Refer to service label attached to furnace (or see Fig. 43).

4. Component test sequence is as follows:
   a. Inducer motor starts and continues to run until Step d. of component test sequence.
   b. Hot surface igniter is energized for 15 sec., then off.
   c. Blower motor operates for 15 sec.
   d. After component test is completed, a status code 11 will show. See component test section of service label (Fig. 43) in furnace for explanation of status codes.

NOTE: To repeat component test, turn setup switch SW1-6 OFF, then back ON.

5. Turn setup DIP switch SW1-6 OFF. Reconnect R lead to furnace control board, release blower door switch and reinstall blower access door.
6. Operate furnace per instruction on inner door.
7. Verify furnace shut down by lowering thermostat setting below room temperature.
8. Verify furnace restarts by raising thermostat setting above room temperature.

Adjustments

Furnace gas input rate on rating plate is for installations at altitudes up to 2000 Ft. (610 M). Furnace input rate must be within +/-2 percent of furnace rating plate input.

⚠ WARNING

FIRE HAZARD

Failure to follow this warning could result in personal injury, death and/or property damage.

DO NOT bottom out gas valve regulator adjusting screw. This can result in unregulated manifold pressure and result in excess overfire and heat exchanger failures.

Perform the following steps:

1. Determine the correct gas input rate.
   The input rating for altitudes above 2,000 ft. (610 M) must be reduced by 4 percent for each 1,000 ft. (305 M) above sea level.
   For installations below 2000 Ft. (610 M), refer to the unit rating plate. For installations above 2000 Ft. (610 M), multiply the input on the rating plate by the de-rate multiplier in Table 9 for the correct input rate.

SERVICE LABEL

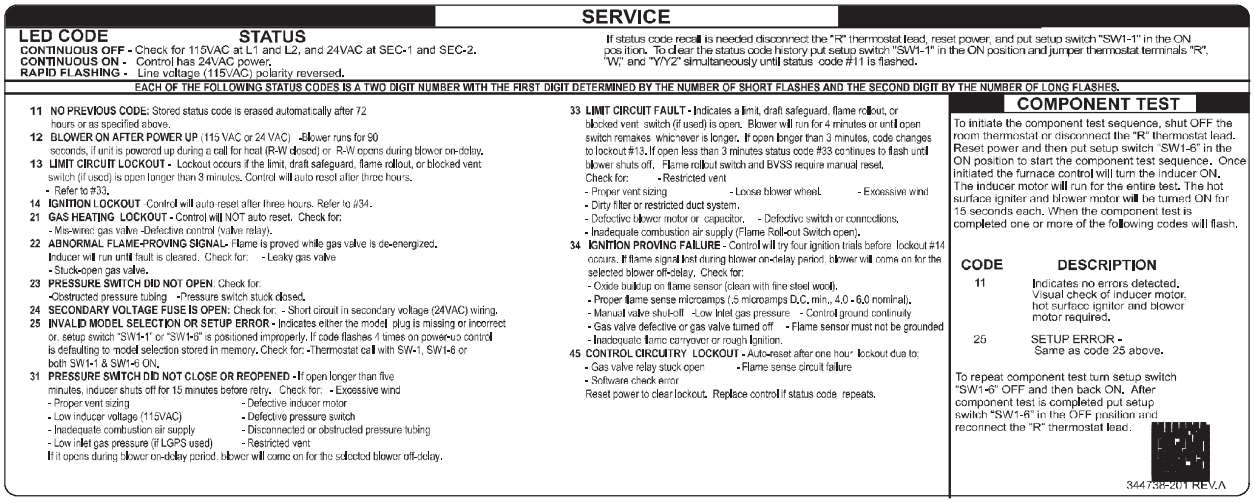

SERVICE

LED CODE STATUS
CONTINUOUS OFF - Check for 115VAC at L1 and L2, and 24VAC at SEC-1 and SEC-2.
CONTINUOUS ON - Control has 24VAC power.
RAPID FLASHING - Line voltage (115VAC) polarity reversed.

If status code recall is needed disconnect the "R" thermostat lead, reset power, and put setup switch "SW1-1" in the ON position. To clear the status code history put setup switch "SW1-1" in the ON position and jumper thermostat terminals "R", "W," and "Y/Y2" simultaneously until status code #11 is flashed.

EACH OF THE FOLLOWING STATUS CODES IS A TWO DIGIT NUMBER WITH THE FIRST DIGIT DETERMINED BY THE NUMBER OF SHORT FLASHES AND THE SECOND DIGIT BY THE NUMBER OF LONG FLASHES.

11 NO PREVIOUS CODE: Stored status code is erased automatically after 72 hours or as specified above.
12 BLOWER ON AFTER POWER UP (115 VAC or 24 VAC) -Blower runs for 90 seconds, if unit is powered up during a call for heat (R-W closed) or R-W opens during blower on-delay.
13 LIMIT CIRCUIT LOCKOUT - Lockout occurs if the limit, draft safeguard, flame rollout, or blocked vent switch (if used) is open longer than 3 minutes. Control will auto reset after three hours.
- Refer to #33.
14 IGNITION LOCKOUT -Control will auto-reset after three hours. Refer to #34.
21 GAS HEATING LOCKOUT - Control will NOT auto reset. Check for:
- Mis-wired gas valve -Defective control (valve relay).
22 ABNORMAL FLAME-PROVING SIGNAL- Flame is proved while gas valve is de-energized. Inducer will run until fault is cleared. Check for: - Leaky gas valve
- Stuck-open gas valve.
23 PRESSURE SWITCH DID NOT OPEN: Check for:
-Obstructed pressure tubing -Pressure switch stuck closed.
24 SECONDARY VOLTAGE FUSE IS OPEN: Check for. - Short circuit in secondary voltage (24VAC) wiring.
25 INVALID MODEL SELECTION OR SETUP ERROR - Indicates either the model plug is missing or incorrect or, setup switch "SW1-1" or "SW1-6" is positioned improperly. If code flashes 4 times on power-up control is defaulting to model selection stored in memory. Check for: -Thermostat call with SW-1, SW1-6 or both SW1-1 & SW1-6 ON.
31 PRESSURE SWITCH DID NOT CLOSE OR REOPENED - If open longer than five minutes, inducer shuts off for 15 minutes before retry. Check for: - Excessive wind
- Proper vent sizing - Defective inducer motor
- Low inducer voltage (115VAC) - Defective pressure switch
- Inadequate combustion air supply - Disconnected or obstructed pressure tubing
- Low inlet gas pressure (if LGPS used) - Restricted vent
If it opens during blower on-delay period, blower will come on for the selected blower off-delay.
33 LIMIT CIRCUIT FAULT - Indicates a limit, draft safeguard, flame rollout, or blocked vent switch (if used) is open. Blower will run for 4 minutes or until open switch remakes, whichever is longer. If open longer than 3 minutes, code changes to lockout #13. If open less than 3 minutes status code #33 continues to flash until blower shuts off. Flame rollout switch and BVSS require manual reset.
Check for: - Restricted vent
- Proper vent sizing - Loose blower wheel - Excessive wind
- Dirty filter or restricted duct system.
- Defective blower motor or capacitor. - Defective switch or connections.
- Inadequate combustion air supply (Flame Roll-out Switch open).
34 IGNITION PROVING FAILURE - Control will try four ignition trials before lockout #14 occurs. If flame signal lost during blower on-delay period, blower will come on for the selected blower off-delay. Check for:
- Oxide buildup on flame sensor (clean with fine steel wool).
- Proper flame sense microamps (.5 microamps D.C. min., 4.0 - 6.0 nominal).
- Manual valve shut-off -Low inlet gas pressure - Control ground continuity
- Gas valve defective or gas valve turned off - Flame sensor must not be grounded
- Inadequate flame carryover or rough ignition.
45 CONTROL CIRCUITRY LOCKOUT - Auto-reset after one hour lockout due to:
- Gas valve relay stuck open - Flame sense circuit failure
- Software check error
Reset power to clear lockout. Replace control if status code repeats.

COMPONENT TEST

To initiate the component test sequence, shut OFF the room thermostat or disconnect the "R" thermostat lead. Reset power and then put setup switch "SW1-6" in the ON position to start the component test sequence. Once initiated the furnace control will turn the inducer ON. The inducer motor will run for the entire test. The hot surface igniter and blower motor will be turned ON for 15 seconds each. When the component test is completed one or more of the following codes will flash.

CODE	DESCRIPTION
11	Indicates no errors detected. Visual check of inducer motor, hot surface igniter and blower motor required.
25	SETUP ERROR - Same as code 25 above.

To repeat component test turn setup switch "SW1-6" OFF and then back ON. After component test is completed put setup switch "SW1-6" in the OFF position and reconnect the "R" thermostat lead.

344738-201 REV.A

A190204

Fig. 43 – Service Label

WIRING DIAGRAM

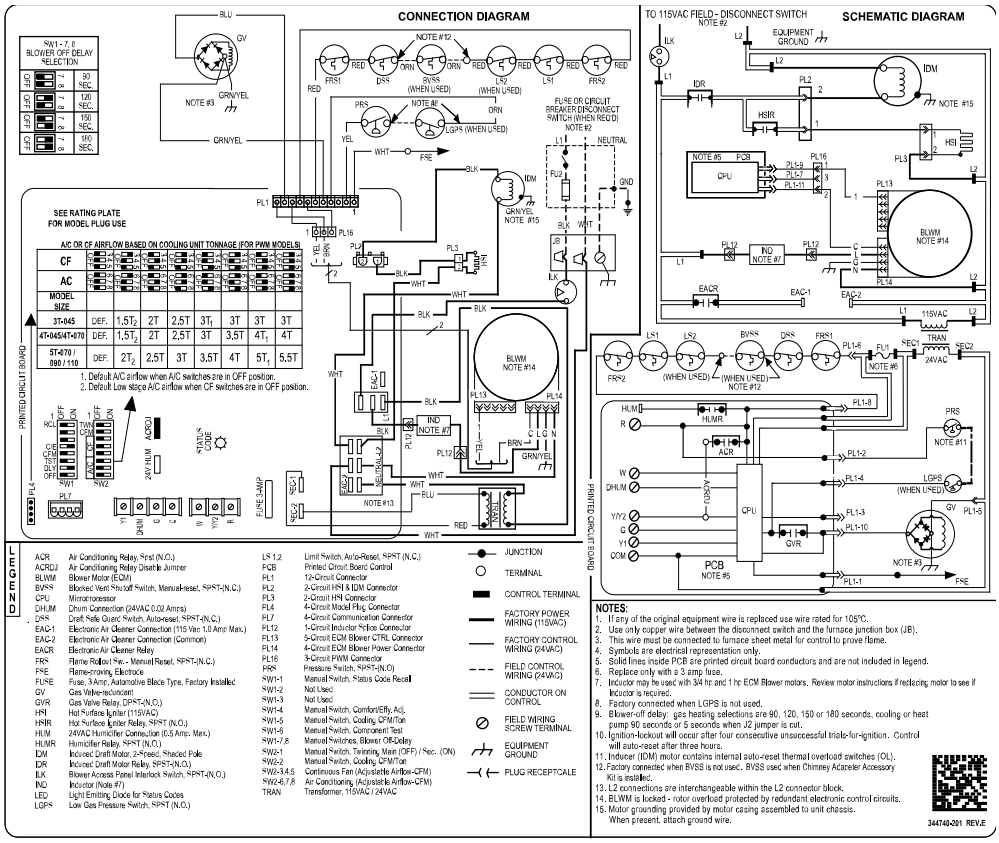

A210176

Fig. 44 – Wiring Diagram

DIP SWITCH CONFIGURATION

SW1

Switch	Description		Factory
1	**Status Code Recovery -** Turn ON to retrieve status codes.	See manual for use.	OFF
3	**Not used**		OFF
4	**Comfort/Efficiency Adjust -** Turn ON to decrease low- approximately 10% for maximum comfort.	heat airflow by approximately 7% and high-heat	ON
5	**CFM per Ton Adjust -** See Airflow Tables in manual for	desired settings. Also see SW2 - 2.	OFF
6	**Component Self Test -** Turn ON to initiate Component disconnected, Turn OFF when Self Test is completed.	Self Test for troubleshooting assistance when R TSTAT lead is	OFF
7 & 8	**Blower Off Delay -** See manual or unit wiring diagram for Factory default is 120 Seconds.	settings. Adjustable 90 - 180 seconds.	7-ON 8-OFF

SW2

Switch	Description		Factory
1	**Twinning -** When Twinned furnace setup is required, SW2 - 1 SW2-1 ON selects the secondary furnace unit. See kit instructions	OFF selects the main furnace unit. for further details.	OFF
2	**CFM per Ton Adjust -** See Airflow Tables in manual for	desired settings. Also see SW1 - 5.	OFF
3-5	**CF Setup Switches -** The Continuous Fan setup switch selects airflow. See Cooling Air Delivery Tables and Continuous Fan delivery	desired CF and low-stage cooling (two-stage A/C units) Tables (when present) for specific switch settings.	ALL OFF
6-8	**A/C Setup Switches -** The Air Conditioning setup switch units) airflow. See Cooling Air Delivery Tables in manual for specific	selects desired cooling or high-stage cooling (two-stage switch settings.	ALL OFF

A190272

Fig. 45 – Furnace Setup Switch Description

A/C OR CF AIRFLOW BASED ON COOLING UNIT TONNAGE (FOR PWM MODELS)

CF	3 4 5 OFF	3 4 5 OFF	3 4 5 OFF	3 4 5 OFF	3 4 5 OFF	3 4 5 OFF	3 4 5 OFF	3 4 5 OFF
AC	6 7 8 OFF	6 7 8 OFF	6 7 8 OFF	6 7 8 OFF	6 7 8 OFF	6 7 8 OFF	6 7 8 OFF	6 7 8 OFF
MODEL SIZE								
3T-045	DEF.	$1.5T_2$	2T	2.5T	$3T_1$	3T	3T	3T
4T-045/4T-070	DEF.	$1.5T_2$	2T	2.5T	3T	3.5T	$4T_1$	4T
5T-070 / 090 / 110	DEF.	$2T_2$	2.5T	3T	3.5T	4T	$5T_1$	5.5T

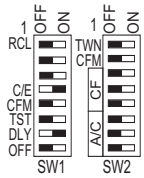

1. Default A/C airflow when A/C switches are in OFF position.
2. Default Low stage A/C airflow when CF switches are in OFF position.

A200303

Fig. 46 – Airflow Selection (based on 350 CFM/TON) for A/C (SW2-6, 7, 8) and *CF (SW2-3, 4, 5)

⚠ CAUTION

FURNACE DAMAGE HAZARD

Failure to follow this caution may result in reduced furnace life.

DO NOT redrill orifices. Improper drilling (burrs, out-of-round holes, etc.) can cause excessive burner noise and misdirection of burner flames. This can result in flame impingement of heat exchangers, causing failures, see Fig. 47.

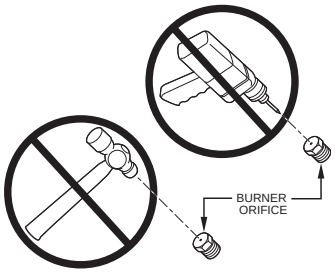

A93059

Fig. 47 – Orifice Hole

2. Determine the correct orifice and manifold pressure adjustment. All models in all positions use Table 10 (22,000 BTUh per burner.) See input listed on rating plate.
   a. Obtain average yearly gas heat value (at installed altitude) from local gas supplier.
   b. Obtain average yearly gas specific gravity from local gas supplier.
   c. Find installation altitude in Table 10.
   d. Find closest natural gas heat value and specific gravity in Table 10.
   e. Follow heat value and specific gravity lines to point of intersection to find orifice size and manifold pressure settings for proper operation.
   f. Check and verify burner orifice size in furnace. NEVER ASSUME ORIFICE SIZE. ALWAYS CHECK AND VERIFY.

NOTE: If orifice hole appears damaged or it is suspected to have been redrilled, check orifice hole with a numbered drill bit of correct size. Never redrill an orifice. A burr-free and squarely aligned orifice hole is essential for proper flame characteristics.

   g. Replace orifice with correct size, if required by Table 10. Use only factory-supplied orifices. See EXAMPLE 1.

3. Adjust manifold pressure to obtain correct input rate, see Fig. 20.

a. Turn gas valve ON/OFF switch to OFF.

⚠ WARNING

ELECTRICAL SHOCK HAZARD

Failure to follow this warning could result in personal injury or death. Disconnect 115-v electrical power and install lockout tag before changing speed tap.

b. Remove manifold pressure tap plug from gas valve.

c. Connect a water column manometer or similar device to manifold pressure tap.

d. Turn gas valve ON/OFF switch to ON.

e. Manually close blower door switch.

f. Jumper R and W thermostat connections on control to start furnace, see Fig. 27.

g. Remove regulator seal cap and turn regulator adjusting screw counterclockwise (out) to decrease input rate of clockwise (in) to increase input rate.

NOTE: DO NOT set manifold pressure less than 3.2-in. w.c. or more than 3.8-in. w.c. for natural gas at sea level. If manifold pressure is outside this range, change main burner orifices.

h. Install regulator seal cap.

i. Leave manometer or similar device connected and proceed to Step 4.

Table 9 – Altitude Derate Multiplier for U.S.A.

ALTITUDE FT. (M)	PERCENT OF DERATE	DERATE MULTIPLIER FACTOR*
0–2000 (0-610)	0	1.00
2001–3000 (610-914)	8–12	0.90
3001–4000 (914-1219)	12–16	0.86
4001–5000 (1219-1524)	16–20	0.82
5001–6000 1524-1829)	20–24	0.78
6001–7000 (1829-2134)	24–28	0.74
7001–8000 (2134-2438)	28–32	0.70
8001–9000 (2438-2743)	32–36	0.66
9001–10,000 (2743-3048)	36–40	0.62

EXAMPLE 1: 0–2000 ft. (0-610 M) altitude

For 22,000 BTUh per burner application use Table 10.

Heating value = 1000 BTUh/cu ft.

Specific gravity = 0.62

Therefore: Orifice No. 43*

Manifold pressure: 3.7-in. w.c.

* Furnace is shipped with No. 43 orifices. In this example all main burner orifices are the correct size and do not need to be changed to obtain proper input rate.

4. Verify natural gas input rate by clocking meter.

NOTE: Gas valve regulator adjustment cap must be in place for proper input to be clocked.

a. Turn off all other gas appliances and pilots served by the meter.

b. Run furnace for 3 minutes in heating operation.

c. Measure time (in sec) for gas meter to complete 1 revolution and note reading. The 2 or 5 cubic feet dial provides a more accurate measurement of gas flow.

d. Refer to Table 10 for cubic ft. of gas per hr.

e. Multiply gas rate (cu ft./hr) by heating value (BTUh/cu ft.) to obtain input.

f. If clocked rate does not match required input from Step 1, increase manifold pressure to increase input or decrease manifold pressure to decrease input. Repeat steps b through e until correct input is achieved. Reinstall regulator seal cap on gas valve.

Table 10 – Orifice Size* and Manifold Pressure (In. W.C.) for Gas Input Rate

(TABULATED DATA BASED ON 22,000 BTUH PER BURNER, DERATED 4%/1000 FT (305M) ABOVE SEA LEVEL)

ALTITUDE RANGE ft (m)		AVG. GAS HEAT VALUE AT ALTITUDE (Btu/cu ft)	SPECIFIC GRAVITY OF NATURAL GAS 0.58 Orifice No.	0.58 Manifold Pressure	0.60 Orifice No.	0.60 Manifold Pressure	0.62 Orifice No.	0.62 Manifold Pressure	0.64 Orifice No.	0.64 Manifold Pressure
U.S.A.	0 (0) to 2000 (610)	900	42	3.5	42	3.6	42	3.7	41	3.5
		925	42	3.3	42	3.4	42	3.5	42	3.7
		950	**43**	**3.8**	42	3.3	42	3.4	42	3.5
		975	**43**	**3.6**	**43**	**3.8**	42	3.2	42	3.3
		1000	**43**	**3.5**	**43**	**3.6**	**43**	**3.7**	**43**	**3.8**
		1025	**43**	**3.3**	**43**	**3.4**	**43**	**3.5**	**43**	**3.6**
		1050	44	3.6	**43**	**3.2**	**43**	**3.4**	**43**	**3.5**
		1075	44	3.4	44	3.5	**43**	**3.2**	**43**	**3.3**
		1100	44	3.3	44	3.4	44	3.5	**43**	**3.2**
U.S.A.	2001 (611) to 3000 (914)	800	42	3.4	42	3.5	42	3.6	42	3.7
		825	42	3.2	42	3.3	42	3.4	42	3.5
		850	**43**	**3.7**	**43**	**3.8**	42	3.2	42	3.3
		875	**43**	**3.5**	**43**	**3.6**	**43**	**3.7**	**43**	**3.8**
		900	**43**	**3.3**	**43**	**3.4**	**43**	**3.5**	**43**	**3.6**
		925	**43**	**3.1**	**43**	**3.2**	**43**	**3.3**	**43**	**3.4**
		950	**43**	**2.9**	**43**	**3.0**	**43**	**3.1**	**43**	**3.2**
		975	**43**	**2.8**	**43**	**2.9**	**43**	**3.0**	**43**	**3.1**
		1000	**43**	**2.6**	**43**	**2.7**	**43**	**2.8**	**43**	**2.9**
U.S.A.	3001 (915) to 4000 (1219)	775	42	3.2	42	3.3	42	3.4	42	3.5
		800	**43**	**3.6**	**43**	**3.8**	42	3.2	42	3.3
		825	**43**	**3.4**	**43**	**3.5**	**43**	**3.7**	**43**	**3.8**
		850	**43**	**3.2**	**43**	**3.3**	**43**	**3.4**	**43**	**3.6**
		875	**43**	**3.0**	**43**	**3.1**	**43**	**3.3**	**43**	**3.4**
		900	**43**	**2.9**	**43**	**3.0**	**43**	**3.1**	**43**	**3.2**
		925	**43**	**2.7**	**43**	**2.8**	**43**	**2.9**	**43**	**3.0**
		950	**43**	**2.6**	**43**	**2.7**	**43**	**2.8**	**43**	**2.8**
U.S.A.	4001 (1220) to 5000 (1524)	750	**43**	**3.6**	**43**	**3.8**	42	3.2	42	3.3
		775	**43**	**3.4**	**43**	**3.5**	**43**	**3.6**	**43**	**3.8**
		800	**43**	**3.2**	**43**	**3.3**	**43**	**3.4**	**43**	**3.5**
		825	**43**	**3.0**	**43**	**3.1**	**43**	**3.2**	**43**	**3.3**
		850	**43**	**2.8**	**43**	**2.9**	**43**	**3.0**	**43**	**3.1**
		875	**43**	**2.7**	**43**	**2.8**	**43**	**2.9**	**43**	**2.9**
		900	**43**	**2.5**	**43**	**2.6**	**43**	**2.7**	**43**	**2.8**
		925	**43**	**2.4**	**43**	**2.5**	**43**	**2.6**	**43**	**2.6**
U.S.A.	5001 (1525) to 6000 (1829)	725	**43**	**3.4**	**43**	**3.5**	**43**	**3.6**	**43**	**3.7**
		750	**43**	**3.2**	**43**	**3.3**	**43**	**3.4**	**43**	**3.5**
		775	**43**	**3.0**	**43**	**3.1**	**43**	**3.2**	**43**	**3.3**
		800	**43**	**2.8**	**43**	**2.9**	**43**	**3.0**	**43**	**3.1**
		825	**43**	**2.6**	**43**	**2.7**	**43**	**2.8**	**43**	**2.9**
		850	**43**	**2.5**	**43**	**2.5**	**43**	**2.6**	**43**	**2.7**
		875	**43**	**2.3**	**43**	**2.4**	**43**	**2.5**	**43**	**2.6**
		900	**43**	**2.2**	**43**	**2.3**	**43**	**2.3**	**43**	**2.4**
U.S.A.	6001 (1830) to 7000 (2133)	675	**43**	**3.4**	**43**	**3.5**	**43**	**3.6**	**43**	**3.7**
		700	**43**	**3.1**	**43**	**3.3**	**43**	**3.4**	**43**	**3.5**
		725	**43**	**2.9**	**43**	**3.0**	**43**	**3.1**	**43**	**3.2**
		750	**43**	**2.7**	**43**	**2.8**	**43**	**2.9**	**43**	**3.0**
		775	**43**	**2.6**	**43**	**2.7**	**43**	**2.7**	**43**	**2.8**
		800	**43**	**2.4**	**43**	**2.5**	**43**	**2.6**	**43**	**2.7**
		825	**43**	**2.3**	**43**	**2.3**	**43**	**2.4**	**43**	**2.5**
		850	**43**	**2.1**	**43**	**2.2**	**43**	**2.3**	**43**	**2.4**

A10180

(TABULATED DATA BASED ON 22,000 BTUH PER BURNER, DERATED 4%/1000 FT (305M) ABOVE SEA LEVEL)

ALTITUDE RANGE ft (m)		AVG. GAS HEAT VALUE AT ALTITUDE (Btu/cu ft)	SPECIFIC GRAVITY OF NATURAL GAS 0.58 Orifice No.	0.58 Manifold Pressure	0.60 Orifice No.	0.60 Manifold Pressure	0.62 Orifice No.	0.62 Manifold Pressure	0.64 Orifice No.	0.64 Manifold Pressure
U.S.A.	7001 (2134) to 8000 (2438)	650	**43**	**3.1**	**43**	**3.2**	**43**	**3.4**	**43**	**3.5**
		675	**43**	**2.9**	**43**	**3.0**	**43**	**3.1**	**43**	**3.2**
		700	**43**	**2.7**	**43**	**2.8**	**43**	**2.9**	**43**	**3.0**
		725	**43**	**2.5**	**43**	**2.6**	**43**	**2.7**	**43**	**2.8**
		750	**43**	**2.4**	**43**	**2.4**	**43**	**2.5**	**43**	**2.6**
		775	**43**	**2.2**	**43**	**2.3**	**43**	**2.4**	**43**	**2.4**
		800	**43**	**2.1**	**43**	**2.1**	**43**	**2.2**	**43**	**2.3**
		825	48	3.7	**43**	**2.0**	**43**	**2.1**	**43**	**2.2**
U.S.A.	8001 (2439) to 9000 (2743)	625	**43**	**2.9**	**43**	**3.0**	**43**	**3.1**	**43**	**3.2**
		650	**43**	**2.7**	**43**	**2.8**	**43**	**2.9**	**43**	**3.0**
		675	**43**	**2.5**	**43**	**2.6**	**43**	**2.7**	**43**	**2.8**
		700	**43**	**2.3**	**43**	**2.4**	**43**	**2.5**	**43**	**2.6**
		725	**43**	**2.2**	**43**	**2.2**	**43**	**2.3**	**43**	**2.4**
		750	**43**	**2.0**	**43**	**2.1**	**43**	**2.2**	**43**	**2.2**
		775	48	3.6	48	3.7	**43**	**2.0**	**43**	**2.1**
U.S.A.	9001 (2744) to 10000 (3048)	600	**43**	**2.7**	**43**	**2.8**	**43**	**2.9**	**43**	**3.0**
		625	**43**	**2.5**	**43**	**2.6**	**43**	**2.6**	**43**	**2.7**
		650	**43**	**2.3**	**43**	**2.4**	**43**	**2.4**	**43**	**2.5**
		675	**43**	**2.1**	**43**	**2.2**	**43**	**2.3**	**43**	**2.3**
		700	48	3.7	**43**	**2.0**	**43**	**2.1**	**43**	**2.2**
		725	48	3.5	48	3.6	48	3.7	**43**	**2.0**

* Orifice numbers shown in **BOLD** are factory-installed.

A10180A

Table 11 – Gas Rate (CU ft./hr)

SECONDS FOR 1 REV	SIZE OF TEST DIAL 1 Cu Ft.	2 Cu Ft.	5 Cu Ft.	SECONDS FOR 1 REV	SIZE OF TEST DIAL 1 Cu Ft.	2 Cu Ft.	5 Cu Ft.
10	360	720	1800	50	72	144	360
11	327	655	1636	51	71	141	355
12	300	600	1500	52	69	138	346
13	277	555	1385	53	68	136	340
14	257	514	1286	54	67	133	333
15	240	480	1200	55	65	131	327
16	225	450	1125	56	64	129	321
17	212	424	1059	57	63	126	316
18	200	400	1000	58	62	124	310
19	189	379	947	59	61	122	305
20	180	360	900	60	60	120	300
21	171	343	857	62	58	116	290
22	164	327	818	64	56	112	281
23	157	313	783	66	54	109	273
24	150	300	750	68	53	106	265
25	144	288	720	70	51	103	257
26	138	277	692	72	50	100	250
27	133	267	667	74	48	97	243
28	129	257	643	76	47	95	237
29	124	248	621	78	46	92	231
30	120	240	600	80	45	90	225
31	116	232	581	82	44	88	220
32	113	225	563	84	43	86	214
33	109	218	545	86	42	84	209
34	106	212	529	88	41	82	205
35	103	206	514	90	40	80	200
36	100	200	500	92	39	78	196
37	97	195	486	94	38	76	192
38	95	189	474	96	38	75	188
39	92	185	462	98	37	74	184
40	90	180	450	100	36	72	180
41	88	176	439	102	35	71	178
42	86	172	429	104	35	69	173
43	84	167	419	106	34	68	170
44	82	164	409	108	33	67	167
45	80	160	400	110	33	65	164
46	78	157	391	112	32	64	161
47	76	153	383	116	31	62	155
48	75	150	375	120	30	60	150
49	73	147	367				

5. Set temperature rise. The furnace must operate within the temperature rise ranges specified on the furnace rating plate. Do not exceed temperature rise range specified on unit rating plate. Determine the temperature rise as follows:

NOTE: Blower access door must be installed when taking temperature rise reading. Leaving blower access door off will result in incorrect temperature measurements. When setup switch SW1-4 is ON, operation will be near the high end of the rise range for improved comfort. Furnace must operate within ranges of temperature rise specified on the furnace rating plate.

6. Determine the temperature rise as follows:
   a. Place thermometers in return and supply ducts as close to furnace as possible. Be sure thermometers do not see radiant heat from heat exchangers. Radiant heat affects temperature rise readings. This practice is particularly important with straight-run ducts.

b. When thermometer readings stabilize, subtract return-air temperature from supply-air temperature to determine air temperature rise.

NOTE: If the temperature rise is outside this range, first check:

(1.) Gas input for heating operation.

(2.) Derate for altitude if applicable.

(3.) Return and supply ducts for excessive restrictions causing static pressures greater than 0.50-in. w.c.

(4.) Ensure Comfort/Efficiency SW 1-4 on furnace control is in OFF=Efficiency position when a bypass humidifier is used, see Fig. 27 for switch location.

(5.) Make sure proper model plug is installed.

c. Turn thermostat down below room temperature and remove blower access door.

d. To increase heating airflow, set Comfort/Efficiency SW1-4 of furnace control to OFF=Efficiency position.

e. Careful not to put tension on any wire connections

f. Repeat steps a through e.

g. When correct input rate and temperature rise is achieved, turn gas valve ON/OFF switch to OFF.

h. Remove manometer or similar device from gas valve.

⚠ WARNING

FIRE HAZARD

Failure to follow this warning could result in personal injury, death, and/or property damage.

Reinstall manifold pressure tap plug in gas valve to prevent gas leak.

i. Reinstall manifold pressure tap plug in gas valve.

j. Turn gas valve ON/OFF switch to ON.

⚠ CAUTION

FURNACE OVERHEATING HAZARD

Failure to follow this caution may result in reduced furnace life.

Recheck temperature rise. It must be within limits specified on the rating plate. Recommended operation is at the mid-point of rise range or slightly above.

7. Set thermostat heat anticipator.

a. Mechanical thermostat - Set thermostat heat anticipator to match the amp. draw of the electrical components in the R-W circuit. Accurate amp. draw readings can be obtained at the wires normally connected to thermostat subbase terminals, R and W. The thermostat anticipator should NOT be in the circuit while measuring current.

(1.) Remove thermostat from subbase or from wall.

(2.) Connect an amp. meter as shown in Fig. 48 across the R and W subbase terminals or R and W wires at wall.

(3.) Record amp. draw across terminals when furnace is in heating and after blower starts.

(4.) Set heat anticipator on thermostat per thermostat instructions and install on subbase or wall.

b. Electronic thermostat: Set cycle rate for 4 cycles per hr.

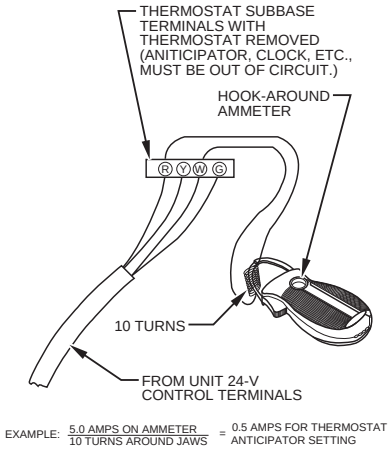

A96316

Fig. 48 – Amp. Draw Check with Ammeter

8. Adjust blower off delay The blower off delay has 4 adjustable settings from 90 sec to 180 sec. The blower off delay jumpers are located on the furnace control board, see Fig. 27.

To change the blower off delay setting, move the jumper from one set of pins on the control to the pins used for the selected blower off delay. Factory off delay setting is 120 sec, see Table 12.

Table 12 – Blower Off Delay Setup Switch

DESIRED HEATING MODE BLOWER OFF DELAY (SEC.)	SETUP SWITCH (SW-7 AND -8) POSITION	
	SW1-7	SW1-8
90	OFF	OFF
120	ON	OFF
150	OFF	ON
180	ON	ON

9. Set Airflow for Air Conditioning-Single Stage and High Stage Cooling

The ECM blower can be adjusted for a range of airflow for Low Speed or High Speed cooling. See Table 13-Air Delivery-CFM (With Filter).

The cooling airflow is adjusted by turning Setup switches SW2-6, SW2-7 and SW2-8 either ON or OFF. Select the required airflow from Fig. 46.

NOTE: 5.5 ton airflow will truncate at 2200 CFM on applicable models. For a complete explanation of cooling airflow, refer to the section titled "Sequence of Operation."

10. The Continuous Fan airflow selection via Setup switches SW2-3, SW2-4, SW2-5 is also the switch setting for low-speed cooling when the furnace is used with a two-speed cooling or heat pump unit. Refer to Fig. 45 and Fig. 46 and the Adjustments section for setup switch configurations. This setup feature allows continuous fan airflow or low-cooling airflow to be adjusted.

The continuous fan speed can be further adjusted at the thermostat using the Continuous Blower Speed Selection from Thermostat function. Changing the continuous fan speed at the thermostat DOES NOT change the low speed cooling airflow selected at the control board. See the section titled Continuous Blower Speed Selection from Thermostat in the Sequence of Operation section of this document.

Check Safety Controls

The flame sensor, gas valve, and pressure switch were all checked in the Start-up procedure section as part of normal operation.

1. Check Main Limit Switch

This control shuts off combustion system and energizes air-circulating blower motor, if furnace overheats. By using this

method to check limit control, it can be established that limit is functioning properly and will operate if there is a restricted return-air supply or motor failure. If limit control does not function during this test, cause must be determined and corrected.

a. Run furnace for at least 5 minutes.
b. Gradually block off return air with a piece of cardboard or sheet metal until the limit trips.
c. Unblock return air to permit normal circulation.
d. Burners will re-light when furnace cools down.

2. Check draft safeguard switch. The purpose of this control is to cause the safe shutdown of the furnace during certain blocked vent conditions.
   a. Verify vent pipe is cool to the touch.
   b. Disconnect power to furnace and remove vent connector from furnace vent elbow.
   c. Restore power to furnace and set room thermostat above room temperature.
   d. After normal start-up, allow furnace to operate for 2 minutes, then block vent elbow in furnace 80 percent of vent area with a piece of flat sheet metal.
   e. Furnace should cycle off within 2 minutes. If gas does not shut off within 2 minutes, determine reason draft safeguard switch did not function properly and correct condition.

NOTE: Should switch remain open longer than 3 minutes, furnace control board will lockout the furnace for 3 hours. To reset furnace control board, turn thermostat below room temperature or from HEAT to OFF and turn 115-v power OFF, then back ON.

   f. Remove blockage from furnace vent elbow.
   g. Switch will auto-reset when it cools.
   h. Re-install vent connector.

3. Check Pressure Switch(es)
   This control proves operation of the draft inducer blower.
   a. Turn off 115-v power to furnace.
   b. Disconnect inducer motor lead wires from wire harness.
   c. Turn on 115-v power to furnace.
   d. Set thermostat to “call for heat” and wait 1 minute. When pressure switch is functioning properly, hot surface igniter should NOT glow and control diagnostic light flashes a status code 32. If hot surface igniter glows when inducer motor is disconnected, shut down furnace immediately.
   e. Determine reason pressure switch did not function properly and correct condition.
   f. Turn off 115-v power to furnace.
   g. Reconnect inducer motor wires, replace outer door, and turn on 115-v power.
   h. Blower will run for 90 seconds before beginning the call for heat again.
   i. Furnace should ignite normally.

Checklist

1. Put away tools and instruments. Clean up debris.
2. Verify that blower OFF-DELAY time is selected as desired.
3. Verify that blower and burner access doors are properly installed.
4. Cycle test furnace with room thermostat.
5. Check operation of accessories per manufacturer’s instructions.
6. Review User’s Guide with owner.
7. Attach literature packet to furnace.

Table 13 – Air Delivery - CFM (With Filter)*

COOLING[4] AND HEATING AIR DELIVERY - CFM (Bottom Return[5] with Filter)													
(SW1-5 and SW2-2 set to OFF, except as indicated. See Notes 1 and 2.)													
Unit Size: 36045V14	**Clg/CF Switch settings**			**External Static Pressure (ESP)**									
Clg Switches:	**SW2-8**	**SW2-7**	**SW2-6**	**0.1**	**0.2**	**0.3**	**0.4**	**0.5**	**0.6**	**0.7**	**0.8**	**0.9**	**1.0**
Clg Default:	OFF	OFF	OFF	1175	1140	1105	1075	1040	1015	980	945	910	875
Cooling (SW2-8,7,6)	OFF	OFF	ON	610	560	500	440	380	See Note 4				
	OFF	ON	OFF	805	760	720	670	625	575	530	485	See Note 4	
	OFF	ON	ON	1010	970	930	895	860	825	785	745	705	665
	ON	OFF	OFF	1175	1140	1105	1075	1040	1015	980	945	910	875
	ON	OFF	ON	1345	1310	1280	1250	1220	1190	1165	1140	1095	1015
	ON	ON	OFF	1480	1435	1395	1350	1310	1265	1220	1185	1115	1015
	ON	ON	ON	1480	1435	1395	1350	1310	1265	1220	1185	1115	1015
	Maximum Clg Airflow[2]			1480	1435	1395	1350	1310	1265	1220	1185	1115	1015
CF Switches	**SW2-5**	**SW2-4**	**SW2-3**	**0.1**	**0.2**	**0.3**	**0.4**	**0.5**	**0.6**	**0.7**	**0.8**	**0.9**	**1.0**
Low-Clg Default:	OFF	OFF	OFF	610	560	500	440	380	See Note 4				
Low-Cooling (SW2-5,4,3)	OFF	OFF	ON	610	560	500	440	380	See Note 4				
	OFF	ON	OFF	805	760	720	670	625	575	530	485	See Note 4	
	OFF	ON	ON	1010	970	930	895	860	825	785	745	705	665
	ON	OFF	OFF	1175	1140	1105	1075	1040	1015	980	945	910	875
	ON	OFF	ON	1345	1310	1280	1250	1220	1190	1165	1140	1095	1015
	ON	ON	OFF	1480	1435	1395	1350	1310	1265	1220	1185	1115	1015
	ON	ON	ON	1480	1435	1395	1350	1310	1265	1220	1185	1115	1015
Cont. Fan Default:	OFF	OFF	OFF	610	560	500	440	380	See Note 4				
Continuous Fan (SW2-5,4,3)	OFF	OFF	ON	610	560	500	440	380	See Note 4				
	OFF	ON	OFF	805	760	720	670	625	575	530	485	See Note 4	
	OFF	ON	ON	1010	970	930	895	860	825	785	745	705	665
	ON	OFF	OFF	1010	970	930	895	860	825	785	745	705	665
	ON	OFF	ON	1010	970	930	895	860	825	785	745	705	665
	ON	ON	OFF	1010	970	930	895	860	825	785	745	705	665
	ON	ON	ON	1010	970	930	895	860	825	785	745	705	665
Heating (SW1)	Heat Airflow[3]			870	825	785	745	700	655	615	570	530	480

Table 13 – Air Delivery - CFM (With Filter)* (Continued)

COOLING[4] AND HEATING AIR DELIVERY - CFM (Bottom Return[5] with Filter)													
(SW1-5 and SW2-2 set to OFF, except as indicated. See Notes 1 and 2.)													
Unit Size: 48045V17	**Clg/CF Switch settings**			**External Static Pressure (ESP)**									
Clg Switches:	**SW2-8**	**SW2-7**	**SW2-6**	**0.1**	**0.2**	**0.3**	**0.4**	**0.5**	**0.6**	**0.7**	**0.8**	**0.9**	**1.0**
Clg Default:	OFF	OFF	OFF	1525	1490	1445	1400	1350	1300	1250	1200	1140	1035
Cooling (SW2-8,7,6)	OFF	OFF	ON	655	590	530	465	390	335	See Note 4			
	OFF	ON	OFF	825	770	715	665	615	560	495	445	395	350
	OFF	ON	ON	1025	980	940	895	850	810	765	725	680	630
	ON	OFF	OFF	1200	1160	1125	1085	1050	1010	975	935	900	860
	ON	OFF	ON	1385	1350	1320	1285	1250	1215	1180	1145	1110	1030
	ON	ON	OFF	1525	1490	1445	1400	1350	1300	1250	1200	1140	1035
	ON	ON	ON	1525	1490	1445	1400	1350	1300	1250	1200	1140	1035
	Maximum Clg Airflow[2]			1525	1490	1445	1400	1350	1300	1250	1200	1140	1035
CF Switches	**SW2-5**	**SW2-4**	**SW2-3**	**0.1**	**0.2**	**0.3**	**0.4**	**0.5**	**0.6**	**0.7**	**0.8**	**0.9**	**1.0**
Low-Clg Default:	OFF	OFF	OFF	655	590	530	465	390	335	See Note 4			
Low-Cooling (SW2-5,4,3)	OFF	OFF	ON	655	590	530	465	390	335	See Note 4			
	OFF	ON	OFF	825	770	715	665	615	560	495	445	395	350
	OFF	ON	ON	1025	980	940	895	850	810	765	725	680	630
	ON	OFF	OFF	1200	1160	1125	1085	1050	1010	975	935	900	860
	ON	OFF	ON	1385	1350	1320	1285	1250	1215	1180	1145	1110	1030
	ON	ON	OFF	1525	1490	1445	1400	1350	1300	1250	1200	1140	1035
	ON	ON	ON	1525	1490	1445	1400	1350	1300	1250	1200	1140	1035
Cont. Fan Default:	OFF	OFF	OFF	655	590	530	465	390	335	See Note 4			
Continuous Fan (SW2-5,4,3)	OFF	OFF	ON	655	590	530	465	390	335	See Note 4			
	OFF	ON	OFF	825	770	715	665	615	560	495	445	395	350
	OFF	ON	ON	1025	980	940	895	850	810	765	725	680	630
	ON	OFF	OFF	1025	980	940	895	850	810	765	725	680	630
	ON	OFF	ON	1025	980	940	895	850	810	765	725	680	630
	ON	ON	OFF	1025	980	940	895	850	810	765	725	680	630
	ON	ON	ON	1025	980	940	895	850	810	765	725	680	630
Heating (SW1)	Heat Airflow[3]			925	875	830	780	735	685	635	590	540	490
Unit Size: 48070V17	**Clg/CF Switch settings**			**External Static Pressure (ESP)**									
Clg Switches:	**SW2-8**	**SW2-7**	**SW2-6**	**0.1**	**0.2**	**0.3**	**0.4**	**0.5**	**0.6**	**0.7**	**0.8**	**0.9**	**1.0**
Clg Default:	OFF	OFF	OFF	1595	1560	1520	1485	1445	1410	1375	1335	1300	1265
Cooling (SW2-8,7,6)	OFF	OFF	ON	660	585	515	445	370	See Note 4				
	OFF	ON	OFF	825	765	705	645	590	530	470	410	365	310
	OFF	ON	ON	1025	970	915	860	810	760	705	640	585	530
	ON	OFF	OFF	1225	1180	1135	1085	1040	995	950	910	865	820
	ON	OFF	ON	1390	1350	1305	1265	1225	1180	1140	1100	1060	1020
	ON	ON	OFF	1595	1560	1520	1485	1445	1410	1375	1335	1300	1265
	ON	ON	ON	1855	1815	1785	1750	1720	1675	1625	1575	1525	1475
	Maximum Clg Airflow[2]			1855	1815	1785	1750	1720	1675	1625	1575	1525	1475
CF Switches	**SW2-5**	**SW2-4**	**SW2-3**	**0.1**	**0.2**	**0.3**	**0.4**	**0.5**	**0.6**	**0.7**	**0.8**	**0.9**	**1.0**
Low-Clg Default:	OFF	OFF	OFF	660	585	515	445	370	See Note 4				
Low-Cooling (SW2-5,4,3)	OFF	OFF	ON	660	585	515	445	370	See Note 4				
	OFF	ON	OFF	825	765	705	645	590	530	470	410	365	310
	OFF	ON	ON	1025	970	915	860	810	760	705	640	585	530
	ON	OFF	OFF	1225	1180	1135	1085	1040	995	950	910	865	820
	ON	OFF	ON	1390	1350	1305	1265	1225	1180	1140	1100	1060	1020
	ON	ON	OFF	1595	1560	1520	1485	1445	1410	1375	1335	1300	1265
	ON	ON	ON	1855	1815	1785	1750	1720	1675	1625	1575	1525	1475
Cont. Fan Default:	OFF	OFF	OFF	660	585	515	445	370	See Note 4				
Continuous Fan (SW2-5,4,3)	OFF	OFF	ON	660	585	515	445	370	See Note 4				
	OFF	ON	OFF	825	765	705	645	590	530	470	410	365	310
	OFF	ON	ON	1025	970	915	860	810	760	705	640	585	530
	ON	OFF	OFF	1025	970	915	860	810	760	705	640	585	530
	ON	OFF	ON	1025	970	915	860	810	760	705	640	585	530
	ON	ON	OFF	1025	970	915	860	810	760	705	640	585	530
	ON	ON	ON	1025	970	915	860	810	760	705	640	585	530
Heating (SW1)	Heat Airflow[3]			1395	1350	1310	1270	1230	1185	1145	1105	1065	1025

Table 13 – Air Delivery - CFM (With Filter)* (Continued)

COOLING[4] AND HEATING AIR DELIVERY - CFM (Bottom Return[5] with Filter)													
(SW1-5 and SW2-2 set to OFF, except as indicated. See Notes 1 and 2.)													
Unit Size: 60070V21	**Clg/CF Switch settings**			**External Static Pressure (ESP)**									
Clg Switches:	**SW2-8**	**SW2-7**	**SW2-6**	**0.1**	**0.2**	**0.3**	**0.4**	**0.5**	**0.6**	**0.7**	**0.8**	**0.9**	**1.0**
Clg Default:	OFF	OFF	OFF	1930	1895	1855	1815	1775	1740	1700	1665	1630	1595
Cooling (SW2-8,7,6)	OFF	OFF	ON	810	735	660	585	505	See Note 4				
	OFF	ON	OFF	1010	945	885	820	760	695	625	565	510	455
	OFF	ON	ON	1205	1150	1090	1040	985	930	875	820	760	705
	ON	OFF	OFF	1400	1345	1295	1245	1200	1155	1105	1060	1005	960
	ON	OFF	ON	1580	1540	1495	1445	1405	1360	1320	1275	1235	1190
	ON	ON	OFF	1930	1895	1855	1815	1775	1740	1700	1665	1630	1595
	ON	ON	ON	2245	2195	2145	2095	2045	1995	1935	1885	1835	1785
	Maximum Clg Airflow[2]			2245	2195	2145	2095	2045	1995	1935	1885	1835	1785
CF Switches	**SW2-5**	**SW2-4**	**SW2-3**	**0.1**	**0.2**	**0.3**	**0.4**	**0.5**	**0.6**	**0.7**	**0.8**	**0.9**	**1.0**
Low-Clg Default:	OFF	OFF	OFF	810	735	660	585	505	See Note 4				
Low-Cooling (SW2-5,4,3)	OFF	OFF	ON	585	490	See Note 4							
	OFF	ON	OFF	810	735	660	585	505	See Note 4				
	OFF	ON	ON	1010	945	885	820	760	695	625	565	510	455
	ON	OFF	OFF	1205	1150	1090	1040	985	930	875	820	760	705
	ON	OFF	ON	1400	1345	1295	1245	1200	1155	1105	1060	1005	960
	ON	ON	OFF	1580	1540	1495	1445	1405	1360	1320	1275	1235	1190
	ON	ON	ON	1930	1895	1855	1815	1775	1740	1700	1665	1630	1595
Cont. Fan Default:	OFF	OFF	OFF	810	735	660	585	505	See Note 4				
Continuous Fan (SW2-5,4,3)	OFF	OFF	ON	585	490	See Note 4							
	OFF	ON	OFF	810	735	660	585	505	See Note 4				
	OFF	ON	ON	1010	945	885	820	760	695	625	565	510	455
	ON	OFF	OFF	1205	1150	1090	1040	985	930	875	820	760	705
	ON	OFF	ON	1400	1345	1295	1245	1200	1155	1105	1060	1005	960
	ON	ON	OFF	1400	1345	1295	1245	1200	1155	1105	1060	1005	960
	ON	ON	ON	1400	1345	1295	1245	1200	1155	1105	1060	1005	960
Heating (SW1)	Heat Airflow[3]			1435	1385	1335	1290	1245	1195	1145	1100	1050	1000
Unit Size: 60090V21	**Clg/CF Switch settings**			**External Static Pressure (ESP)**									
Clg Switches:	**SW2-8**	**SW2-7**	**SW2-6**	**0.1**	**0.2**	**0.3**	**0.4**	**0.5**	**0.6**	**0.7**	**0.8**	**0.9**	**1.0**
Clg Default:	OFF	OFF	OFF	1985	1935	1885	1835	1785	1735	1685	1630	1583	1532
Cooling (SW2-8,7,6)	OFF	OFF	ON	860	755	650	545	445	See Note 4				
	OFF	ON	OFF	1085	1000	910	830	735	655	565	485	405	310
	OFF	ON	ON	1255	1180	1105	1025	950	870	790	715	640	570
	ON	OFF	OFF	1425	1355	1290	1220	1150	1085	1015	940	870	800
	ON	OFF	ON	1630	1575	1515	1455	1395	1330	1270	1210	1155	1090
	ON	ON	OFF	1985	1935	1885	1835	1785	1735	1685	1630	1583	1532
	ON	ON	ON	2100	2055	2010	1960	1915	1870	1820	1775	1715	1640
	Maximum Clg Airflow[2]			2100	2055	2010	1960	1915	1870	1820	1775	1715	1640
CF Switches	**SW2-5**	**SW2-4**	**SW2-3**	**0.1**	**0.2**	**0.3**	**0.4**	**0.5**	**0.6**	**0.7**	**0.8**	**0.9**	**1.0**
Low-Cooling (SW2-5,4,3)	OFF	OFF	ON	700	575	See Note 4							
	OFF	ON	OFF	860	755	650	545	445	See Note 4				
	OFF	ON	ON	1085	1000	910	830	735	655	565	485	405	310
	ON	OFF	OFF	1255	1180	1105	1025	950	870	790	715	640	570
	ON	OFF	ON	1425	1355	1290	1220	1150	1085	1015	940	870	800
	ON	ON	OFF	1630	1575	1515	1455	1395	1330	1270	1210	1155	1090
	ON	ON	ON	1985	1935	1885	1835	1785	1735	1685	1630	1583	1532
Cont. Fan Default:	OFF	OFF	OFF	860	755	650	545	445	See Note 4				
Continuous Fan (SW2-5,4,3)	OFF	OFF	ON	700	575	See Note 4							
	OFF	ON	OFF	860	755	650	545	445	See Note 4				
	OFF	ON	ON	1085	1000	910	830	735	655	565	485	405	310
	ON	OFF	OFF	1255	1180	1105	1025	950	870	790	715	640	570
	ON	OFF	ON	1425	1355	1290	1220	1150	1085	1015	940	870	800
	ON	ON	OFF	1630	1575	1515	1455	1395	1330	1270	1210	1155	1090
	ON	ON	ON	1630	1575	1515	1455	1395	1330	1270	1210	1155	1090
Heating (SW1)	Heat Airflow[3]			1830	1775	1725	1675	1625	1570	1520	1465	1410	1360

Table 13 – Air Delivery - CFM (With Filter)* (Continued)

COOLING[4] AND HEATING AIR DELIVERY - CFM (Bottom Return[5] with Filter)													
(SW1-5 and SW2-2 set to OFF, except as indicated. See Notes 1 and 2.)													
Unit Size: 60090V24	**Clg/CF Switch settings**			**External Static Pressure (ESP**									
Clg Switches:	**SW2-8**	**SW2-7**	**SW2-6**	**0.1**	**0.2**	**0.3**	**0.4**	**0.5**	**0.6**	**0.7**	**0.8**	**0.9**	**1.0**
Clg Default:	OFF	OFF	OFF	1970	1915	1865	1815	1765	1715	1660	1605	1545	1485
Cooling (SW2-8,7,6)	OFF	OFF	ON	980	885	770	675	585	See Note 4				
	OFF	ON	OFF	1115	1030	930	840	755	670	575	510	415	330
	OFF	ON	ON	1280	1205	1130	1045	960	885	810	740	670	595
	ON	OFF	OFF	1450	1380	1315	1250	1165	1090	1020	955	890	825
	ON	OFF	ON	1630	1570	1510	1450	1385	1320	1250	1185	1125	1070
	ON	ON	OFF	1970	1915	1865	1815	1765	1715	1660	1605	1545	1485
	ON	ON	ON	2135	2090	2035	1990	1940	1895	1850	1795	1745	1690
	Maximum Clg Airflow[2]			2175	2125	2080	2030	1980	1935	1890	1840	1795	1735
CF Switches	**SW2-5**	**SW2-4**	**SW2-3**	**0.1**	**0.2**	**0.3**	**0.4**	**0.5**	**0.6**	**0.7**	**0.8**	**0.9**	**1.0**
Low-Clg Default:	OFF	OFF	OFF	980	885	770	675	585	See Note 4				
Low-Cooling (SW2-5,4,3)	OFF	OFF	ON	790	670	See Note 4							
	OFF	ON	OFF	980	885	770	675	585	See Note 4				
	OFF	ON	ON	1115	1030	930	840	755	670	575	510	415	330
	ON	OFF	OFF	1280	1205	1130	1045	960	885	810	740	670	595
	ON	OFF	ON	1450	1380	1315	1250	1165	1090	1020	955	890	825
	ON	ON	OFF	1630	1570	1510	1450	1385	1320	1250	1185	1125	1070
	ON	ON	ON	1970	1915	1865	1815	1765	1715	1660	1605	1545	1485
Cont. Fan Default:	OFF	OFF	OFF	980	885	770	675	585	See Note 4				
Continuous Fan (SW2-5,4,3)	OFF	OFF	ON	790	670	See Note 4							
	OFF	ON	OFF	980	885	770	675	585	See Note 4				
	OFF	ON	ON	1115	1030	930	840	755	670	575	510	415	330
	ON	OFF	OFF	1280	1205	1130	1045	960	885	810	740	670	595
	ON	OFF	ON	1450	1380	1315	1250	1165	1090	1020	955	890	825
	ON	ON	OFF	1630	1570	1510	1450	1385	1320	1250	1185	1125	1070
	ON	ON	ON	1630	1570	1510	1450	1385	1320	1250	1185	1125	1070
Heating (SW1)	Heat Airflow[3]			1740	1680	1625	1570	1510	1445	1385	1325	1265	1205
Unit Size:66110V24	**Clg/CF Switch settings**			**External Static Pressure (ESP)**									
Clg Switches:	**SW2-8**	**SW2-7**	**SW2-6**	**0.1**	**0.2**	**0.3**	**0.4**	**0.5**	**0.6**	**0.7**	**0.8**	**0.9**	**1.0**
Clg Default:	OFF	OFF	OFF	2040	1980	1920	1865	1805	1750	1700	1640	1575	1525
Cooling (SW2-8,7,6)	OFF	OFF	ON	910	795	690	580	495	See Note 4				
	OFF	ON	OFF	1140	1050	955	865	775	See Note 4				
	OFF	ON	ON	1305	1220	1140	1055	975	895	815	745	680	605
	ON	OFF	OFF	1480	1405	1325	1255	1180	1105	1035	975	895	830
	ON	OFF	ON	1680	1610	1540	1475	1415	1345	1275	1215	1150	1095
	ON	ON	OFF	2040	1980	1920	1865	1805	1750	1700	1640	1575	1525
	ON	ON	ON	2280	2230	2175	2125	2075	2025	1980	1930	1880	1830
	Maximum Clg Airflow[2]			2485	2430	2380	2330	2280	2230	2185	2140	2090	2030
CF Switches	**SW2-5**	**SW2-4**	**SW2-3**	**0.1**	**0.2**	**0.3**	**0.4**	**0.5**	**0.6**	**0.7**	**0.8**	**0.9**	**1.0**
Low-Clg Default:	OFF	OFF	OFF	910	795	690	580	495	See Note 4				
Low-Cooling (SW2-5,4,3)	OFF	OFF	ON	730	665	See Note 4							
	OFF	ON	OFF	910	795	690	580	495	See Note 4				
	OFF	ON	ON	1140	1050	955	865	775	See Note 4				
	ON	OFF	OFF	1305	1220	1140	1055	975	895	815	745	680	605
	ON	OFF	ON	1480	1405	1325	1255	1180	1105	1035	975	895	830
	ON	ON	OFF	1680	1610	1540	1475	1415	1345	1275	1215	1150	1095
	ON	ON	ON	2040	1980	1920	1865	1805	1750	1700	1640	1575	1525
Cont. Fan Default:	OFF	OFF	OFF	910	795	690	580	495	See Note 4				
Continuous Fan (SW2-5,4,3)	OFF	OFF	ON	730	665	See Note 4							
	OFF	ON	OFF	910	795	690	580	495	See Note 4				
	OFF	ON	ON	1140	1050	955	865	775	See Note 4				
	ON	OFF	OFF	1305	1220	1140	1055	975	895	815	745	680	605
	ON	OFF	ON	1480	1405	1325	1255	1180	1105	1035	975	895	830
	ON	ON	OFF	1480	1405	1325	1255	1180	1105	1035	975	895	830
	ON	ON	ON	1480	1405	1325	1255	1180	1105	1035	975	895	830
Heating (SW1)	Heat Airflow[3]			2120	2065	2005	1950	1895	1845	1790	1735	1680	1625

See Notes following table.

1. Nominal 350 CFM/ton cooling airflow is delivered with SW1-5 and SW2-2 set to OFF.
   Set both SW1-5 and SW2-2 to ON for +7% airflow (nominal 370 CFM/ton).
   Set SW1-5 to ON and SW2-2 to OFF for +15% airflow (nominal 400 CFM/ton).
   Set SW2-2 to ON and SW1-5 to OFF for -7% airflow (nominal 325 CFM/ton).
   The above adjustments in airflow are subject to motor horsepower range/capacity.
   This applies to Cooling and Low-Cooling airflow, but does not affect continuous fan airflow.
2. Maximum cooling airflow is achieved when switches SW2-6, SW2-7, SW2-8 and SW1-5 are set to ON, and SW2-2 is set to OFF.
3. All heating CFM's are when comfort/efficiency adjustment switch (SW1-4) is set to OFF
4. Ductwork must be sized for heating CFM within the operational range of ESP. Operation within blank areas of the chart is not recommended because heat operation will be above 1.0 ESP.
5. All airflows on 21" casing size furnaces are 5% less on side return only installations.
6. Side returns for 24.5" casing sizes require two sides, or side and bottom, to allow sufficient airflow at the return of the furnace.
7. Airflows over 1800 CFM require bottom return, two-side return, or bottom and side return or excessive watt draw may result. A minimum filter size of 20x25" (508 x 635 mm) is required.

SERVICE AND MAINTENANCE PROCEDURES

Untrained personnel can perform basic maintenance functions such as cleaning and replacing air filters. All other operations must be performed by trained service personnel. A qualified service person should inspect the furnace once a year.

⚠ WARNING

FIRE, INJURY OR DEATH HAZARD

Failure to follow this warning could result in personal injury, death and/or property damage.

The ability to properly perform maintenance on this equipment requires certain knowledge, mechanical skills, tools, and equipment. If you do not possess these, do not attempt to perform any maintenance on this equipment other than those procedures recommended in the User's Manual.

⚠ CAUTION

ENVIRONMENTAL HAZARD

Failure to follow this caution may result in environmental pollution.

Remove and recycle all components or materials (i.e. oil, refrigerant, control board, etc.) before unit final disposal.

⚠ WARNING

ELECTRICAL SHOCK, FIRE OR EXPLOSION HAZARD

Failure to follow this warning could result in personal injury or death, or property damage.

Before installing, modifying, or servicing system, main electrical disconnect switch must be in the OFF position and install a lockout tag. There may be more than one disconnect switch. Lock out and tag switch with a suitable warning label. Verify proper operation after servicing.

⚠ CAUTION

ELECTRICAL OPERATION HAZARD

Failure to follow this caution may result in improper furnace operation or failure of furnace.

Label all wires prior to disconnection when servicing controls. Wiring errors can cause improper and dangerous operation.

GENERAL

These instructions are written as if the furnace is installed in an upflow application. An upflow furnace application is where the blower is located below the combustion and controls section of the furnace, and conditioned air is discharged upward. Since this furnace can be installed in any of the 4 positions (see Fig. 4), you must revise your orientation to component location accordingly.

ELECTRICAL CONTROLS AND WIRING

The electrical ground and polarity for 115-v wiring must be properly maintained. See Fig. 25 for field wiring information and Fig. 44 for furnace wiring information.

⚠ WARNING

ELECTRICAL SHOCK HAZARD

Failure to follow this warning could result in personal injury or death.

There may be more than one electrical supply to the furnace. Check accessories and cooling unit for additional electrical supplies that must be shut off during furnace servicing. Lock out and tag switch with a suitable warning label.

NOTE: If the polarity is not correct, the STATUS LED on the control will flash rapidly , and prevent the furnace from heating. The control system also requires an earth ground for proper operation of the control and flame-sensing electrode.

The 24-v circuit contains an automotive-type, 3-amp. fuse located on the control, see Fig. 27. Any shorts of the 24-v wiring during installation, service, or maintenance will cause this fuse to blow. If fuse replacement is required, use ONLY a 3-amp. fuse. The control LED will display status code 24 when fuse needs to be replaced.

Proper instrumentation is required to service electrical controls. The control in this furnace is equipped with a Status Code LED (Light-Emitting Diode) to aid in installation, servicing, and troubleshooting. Status codes can be viewed at the sight glass in blower access door. The amber furnace control LED is either ON continuously, rapid flashing, or a code composed of 2 digits. The first digit is the number of short flashes, the second digit is the number of long flashes.

For an explanation of status codes, refer to service label located on blower access door (or see Fig. 43).

See the brief Troubleshooting Guide (Fig.).

The stored status codes will NOT be erased from the control memory, when 115- or 24-v power is interrupted. The control will store up to the last 7 Status Codes in order of occurrence.

1. To retrieve status codes, proceed with the following:

NOTE: NO thermostat signal may be present at control, and all blower-OFF delays must be completed.

   a. Leave 115-v power to furnace turned on.
   b. Remove outer access door.
   c. Look into blower access door sight glass for current LED status.
   d. Remove blower access door.

NOTE: The Status Codes cannot be retrieved by disconnecting the limit switch or draft safeguard switch. To retrieve Status Codes, follow the procedure below.

2. Turn Setup Switch, SW1-1 "ON."

3. Manually close blower access door switch.
4. Control will flash up to 7 Status Codes.
5. The last Status Code, or 8th Code, will be Code 11.
6. Turn SW1-1 "OFF."
7. A continuously-lit Amber LED will appear and indicates proper operation.
8. Release blower access door switch, install blower access door and replace outer door or refer to the SERVICE label on the front of the blower access door for more information.

COMPONENT SELF-TEST

Component Test can ONLY be initiated by performing the following:

1. Remove outer access door.
2. Remove blower access door.
3. Remove the wire from the "R" terminal of the control board.
4. Turn Setup Switch, SW-1-6 "ON."
5. Manually close blower access door switch.

Blower access door switch opens 115-v power to control. No component operation can occur unless switch is closed. Caution must be taken when manually closing this switch for service purposes.

⚠ WARNING

ELECTRICAL SHOCK HAZARD

Failure to follow this warning could result in personal injury, or death.
Blower access door switch opens 115-v power to furnace control. No component operation can occur unless switch is closed. Exercise caution to avoid electrical shock from exposed electrical components when manually closing this switch for service purposes.

6. Component Test sequence will function as follows:
   a. Inducer motor starts and continues to run until Step (d.) of component test sequence.
   b. Hot surface igniter is energized for 15 sec, then deenergized.
   c. Blower operates for 15 sec, then turns off.
   d. After component test is completed, one or more status code 11 will flash. See component test section of service label for explanation of status codes.
   e. Turn setup switch SW1-6 OFF.

NOTE: To repeat component test, turn setup switch SW1-6 OFF then back ON.

7. RELEASE BLOWER ACCESS DOOR SWITCH, reattach wire to "R" terminal on furnace control board, replace blower access door, and replace outer access door.

CARE AND MAINTENANCE

⚠ WARNING

FIRE OR EXPLOSION HAZARD

Failure to follow this warning could result in personal injury, death and/or property damage.
Never store anything on, near, or in contact with the furnace, such as:

1. Spray or aerosol cans, rags, brooms, dust mops, vacuum cleaners, or other cleaning tools.
2. Soap powders, bleaches, waxes or other cleaning compounds, plastic or plastic containers, gasoline, kerosene, cigarette lighter fluid, dry cleaning fluids, or other volatile fluids.
3. Paint thinners and other painting compounds, paper bags, or other paper products. Exposure to these materials could lead to corrosion of the heat exchangers.

For continuing high performance and to minimize possible furnace failure, periodic maintenance must be performed on this furnace. Consult your local dealer about proper frequency of maintenance and the availability of a maintenance contract.

⚠ WARNING

ELECTRICAL SHOCK AND FIRE HAZARD

Failure to follow this warning could result in personal injury, death, and/or property damage.
Turn off the gas and electrical supplies to the furnace and install lockout tag before performing any maintenance or service. Follow the operating instructions on the label attached to the furnace.

⚠ WARNING

CARBON MONOXIDE POISONING AND FIRE HAZARD

Failure to follow this warning could result in personal injury, death and/or property damage.
Never operate furnace without a filter or with filter access door removed.

⚠ CAUTION

CUT HAZARD

Failure to follow this caution may result in personal injury.
Sheet metal parts may have sharp edges or burrs. Use care and wear appropriate protective clothing, safety glasses and gloves when handling parts, and servicing furnaces.

The minimum maintenance on this furnace is as follows:

1. Check and clean air filter each month or more frequently if required. Replace if torn.
2. Check blower motor and wheel for cleanliness each heating and cooling season. Clean as necessary.
3. Check electrical connections for tightness and controls for proper operation each heating season. Service as necessary.
4. Inspect burner compartment before each heating season for rust, corrosion, soot or excessive dust. If necessary, have furnace and burner serviced by a qualified service agency.
5. Inspect the vent pipe/vent system before each heating season for rust, corrosion, water leakage, sagging pipes or broken fittings. Have vent pipes/vent system serviced by a qualified service agency.
6. Inspect any accessories attached to the furnace such as a humidifier or electronic air cleaner. Perform any service or maintenance to the accessories as recommended in the accessory instructions.

Cleaning and/or Replacing Air Filter

The air filter arrangement will vary depending on the application.

NOTE: If the filter has an airflow direction arrow, the arrow must point towards the blower.

⚠ CAUTION

CUT HAZARD

Failure to follow this caution may result in personal injury.
Sheet metal parts may have sharp edges or burrs. Use care and wear appropriate protective clothing, safety glasses and gloves when handling parts, and servicing furnaces.

Media cabinet filter procedures:

1. Turn off electrical supply to furnace before removing filter access door.
2. Remove filter cabinet door.
3. Slide filter out of cabinet.
4. If equipped with permanent, washable 3/4-in. (19 mm) filter, clean filter by spraying cold tap water through filter in opposite direction of airflow. Rinse filter and let dry. Oiling or coating of the filter is not recommended. See Table 14 for size information.
5. If equipped with factory-specified disposable media filter, replace only with media filter having the same part number and size. For expandable replacement media, refer to the instructions included with the replacement media.
6. Slide filter into cabinet.
7. Replace filter cabinet door.
8. Turn on electrical supply to furnace.

Table 14 – Filter Size Information - In. (mm)

FURNACE CASING WIDTH	FILTER SIZE		FILTER TYPE
	SIDE RETURN	BOTTOM RETURN	
14-1/2 (368)	16 X 25 X 3/4 (406 X 635 X 19)	14 X 25 X 3/4 (356 X 635 X 19)	Washable*
17-1/2 (445)	16 X 25 X 3/4 (406 X 635 X 19)	16 X 25 X 3/4 (406 X 635 X 19)	Washable*
21 (533)	16 X 25 X 3/4 (406 X 635 X 19)	20 X 25 X 3/4 (508 X 635 X 19)	Washable*
24 (610)	16 X 25 X 3/4 (406 X 635 X 19)	24 X 25 X 3/4 (610 X 635 X 19)	Washable*

* Recommended

Blower Motor and Wheel

The following steps should be performed by a qualified service agency.

To ensure long life and high efficiency, clean accumulated dirt and grease from blower wheel and motor annually.

The inducer and blower motors are pre-lubricated and require no additional lubrication. These motors can be identified by the absence of oil ports on each end of the motor.

⚠ WARNING

ELECTRICAL SHOCK HAZARD
Failure to follow this warning could result in personal injury or death. Blower access door switch opens 115-v power to control. No component operation can occur unless switch is closed. Caution must be taken when manually closing this switch for service purposes.

NOTE: The blower wheel should not be dropped or bent as balance will be affected.

Clean blower motor and wheel as follows:

1. Turn off electrical supply to furnace.
2. Remove outer door.
3. For downflow or horizontal furnaces having vent pipes within the furnace that pass in front of the blower access door:
   a. Disconnect vent connector from furnace vent elbow.
   b. Disconnect and remove short piece of vent pipe from within furnace.
4. Remove screws from blower access door and remove blower access door.
5. All factory wires can be left connected, but field thermostat connections may need to be disconnected depending on their length and routing.
6. Remove 2 screws holding blower assembly to blower deck and slide blower assembly out of furnace.
7. Clean blower wheel and motor using a vacuum with soft brush attachment. Blower wheel blades may be cleaned with a small paint or flux brush. Do not remove or disturb balance weights (clips) on blower wheel blades.
8. Vacuum any loose dust from blower housing, wheel and motor.
9. If a greasy residue is present on blower wheel, remove wheel from the blower housing and wash it with an appropriate degreaser.

NOTE: Before disassembly, mark blower mounting arms, motor, and blower housing so motor and each arm is positioned at the same location during reassembly.

To remove wheel:

   a. Disconnect ground wire attached to blower housing.
   b. Remove screws securing cutoff plate and remove cutoff plate from housing.
   c. Loosen set screw holding blower wheel on motor shaft (160+/-20 in.-lb. when assembling).
   d. Remove bolts holding motor to blower housing and slide motor out of wheel (40+/-10 in.-lb. when reassembling).
   e. Remove blower wheel from housing.
   f. Clean wheel and housing.
10. Reassemble motor and blower by reversing steps 9a, through 9e. Be sure to reattach ground wire to the blower housing.
11. Verify that blower wheel is centered in blower housing and set screw contacts the flat portion of the motor shaft. Loosen set screw on blower wheel and reposition if necessary.
12. Spin the blower wheel by hand to verify that the wheel does not rub on the housing.
13. Reinstall blower assembly in furnace.
14. Reinstall 2 screws securing blower assembly to blower deck.
15. Reconnect blower leads to furnace control. Refer to furnace wiring diagram, and connect thermostat leads if previously disconnected.
16. To check blower for proper rotation:
   a. Turn on electrical supply.

⚠ WARNING

ELECTRICAL SHOCK HAZARD
Failure to follow this warning could result in personal injury, or death. Blower access door switch opens 115-v power to furnace control. No component operation can occur unless switch is closed. Exercise caution to avoid electrical shock from exposed electrical components when manually closing this switch for service purposes.

   b. Manually close blower access door switch.

NOTE: If R-W thermostat terminals are jumpered at the time blower access door switch is closed, blower will run for 90 sec before beginning a heating cycle.

   c. Perform component self-test as shown at the bottom of the SERVICE label, located on the front of blower access door.
   d. Verify blower is rotating in the correct direction
17. If furnace is operating properly, RELEASE BLOWER ACCESS DOOR SWITCH. Remove any jumpers or reconnect any disconnected thermostat leads. Replace blower access door.
18. Downflow or horizontal furnaces with vent pipe through furnace only:

a. Install and connect short piece of vent pipe inside furnace to existing vent.

b. Connect vent connector to vent elbow.

19. Reinstall outer door.
20. Turn on gas supply and cycle furnace through one complete heating and cooling cycle. Verify the furnace temperature rise as shown in Adjustments Section. Adjust temperature rise as shown in Adjustments Section. If outdoor temperature is below 70°F, turn off circuit breaker to outdoor unit before running furnace in the cooling cycle. Turn outdoor circuit breaker on after completing cooling cycle.

Cleaning Heat Exchanger

The following steps should be performed by a qualified service agency.

NOTE: If the heat exchangers get a heavy accumulation of soot and carbon, they should be replaced rather than trying to clean them thoroughly. A build-up of soot and carbon indicates that a problem exists which needs to be corrected, such as improper adjustment of manifold pressure, insufficient or poor quality combustion air, incorrect size or damaged manifold orifice(s), improper gas, or a restricted heat exchanger. Action must be taken to correct the problem.

If it becomes necessary to clean the heat exchangers because of dust or corrosion, proceed as follows:

1. Turn OFF gas and electrical power to furnace.
2. Remove outer access door.
3. Disconnect vent connector from furnace vent elbow.
4. For downflow or horizontal furnace having an internal vent pipe, remove internal vent pipe within the casing.
5. Disconnect wires to the following components. Mark wires to aid in reconnection (be careful when disconnecting wires from switches because damage may occur):

   a. Draft safeguard switch.

   b. Inducer motor.

   c. Pressure switches.

   d. Limit overtemperature switch.

   e. Gas valve.

   f. Hot surface igniter.

   g. Flame-sensing electrode.

   h. Flame rollout switches.
6. Remove screws that fasten the collector box assembly to the cell panel. Be careful not to damage the collector box. Inducer assembly and elbow need not be removed from collector box.
7. Disconnect gas line from gas manifold.
8. Remove the four screws that attach the burner assembly to the cell panel. The gas valve and individual burners need not be removed from support assembly. Remove NOx baffles, if installed.

NOTE: Be very careful when removing burner assembly to avoid breaking igniter. See Fig. 49 and Fig. 50 for correct igniter location.

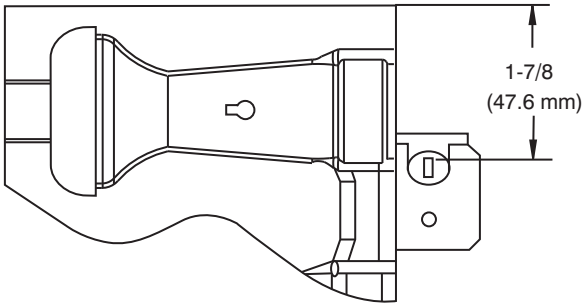

A05026

Fig. 49 – Igniter Position - Top View

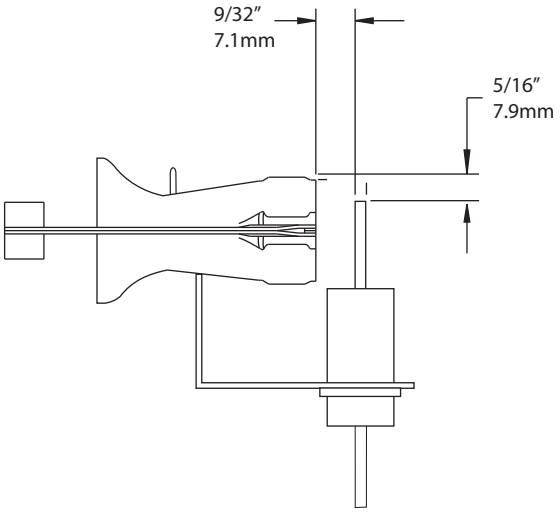

A05025

Fig. 50 – Igniter Position - Side View

NOTE: The materials needed in item 9 can usually be purchased at local hardware stores.

9. Using field-provided 25-caliber rifle cleaning brush; a 36-in. (914 mm) long, 1/4-in. (6 mm) diameter steel spring cable; and a variable speed drill, do the following:

   a. Remove metal screw fitting from wire brush to allow insertion into cable.

   b. Insert the twisted wire end of brush into end of spring cable, and crimp tight with crimping tool or crimp by striking with ball-peen hammer. TIGHTNESS IS VERY IMPORTANT.

      (1.) Attach variable-speed, reversible drill to the end of spring cable (end opposite brush).

      (2.) Insert brush end of cable into the outlet opening of cell and slowly rotate with drill. DO NOT force cable. Gradually insert cable into upper pass of cell, see Fig. 51.

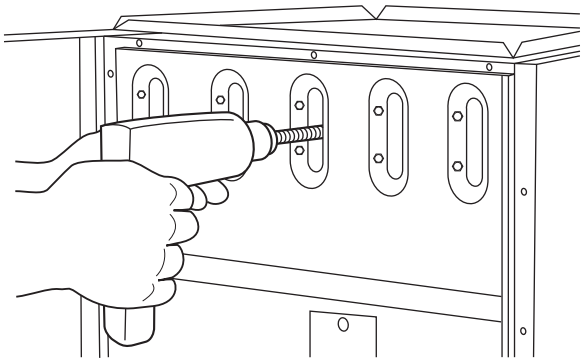

A91252

Fig. 51 – Cleaning Heat Exchanger Cell

(3.) Work cable in and out of cell 3 or 4 times to obtain sufficient cleaning. DO NOT pull cable with great force. Reverse drill and gradually work cable out.
(4.) Insert brush end of cable in burner inlet opening of cell, and proceed to clean 2 lower passes of cell in same manner as upper pass.
(5.) Repeat foregoing procedures until each cell in furnace has been cleaned.
(6.) Using vacuum cleaner, remove residue from each cell.
(7.) Using vacuum cleaner with soft brush attachment, clean burner assembly.
(8.) Clean flame sensor with fine steel wool.
(9.) Reinstall burner assembly. Center burners in cell openings.

10. Remove old sealant from cell panel and collector box flange.
11. Spray releasing agent on the heat exchanger cell panel where collector box assembly contacts cell panel.

NOTE: A releasing agent such as cooking spray or equivalent (must not contain corn or canola oil, aromatic or halogenated hydrocarbons or inadequate seal may occur) and RTV sealant (G.E. 162, 6702, or Dow-Corning 738) are needed before starting installation. DO NOT substitute any other type of RTV sealant. G.E. 162 (P771-9003) is available through RCD in 3-oz tubes.

12. Apply new sealant to flange of collector box and attach to cell panel using existing screws, making sure all screws are secure.
13. Reconnect wires to the following components (Use connection diagram on wiring label, if wires were not marked for reconnection locations.):
    a. Draft safeguard switch.
    b. Inducer motor.
    c. Pressure switches.
    d. Limit overtemperature switch.
    e. Gas valve.
    f. Hot surface igniter.
    g. Flame-sensing electrode.
    h. Flame rollout switches.
14. Reinstall internal vent pipe, if applicable.
15. Reinstall vent connector on furnace vent elbow. Securely fasten vent connector to vent elbow with 2 field-supplied, corrosion-resistant, sheet metal screws located 180° apart.
16. Replace blower access door only if it was removed.
17. Set thermostat above room temperature and check furnace for proper operation.
18. Verify blower airflow and speed changes between heating and cooling.

⚠ WARNING

FIRE OR EXPLOSION HAZARD

Failure to follow this warning could result in personal injury, death, and/or property damage.

Never purge a gas line into a combustion chamber. Never test for gas leaks with an open flame. Use a commercially available soap solution made specifically for the detection of leaks to check all connections. A fire or explosion may result causing property damage, personal injury or loss of life.

19. Check for gas leaks.

SEQUENCE OF OPERATION

NOTE: Furnace control must be grounded for proper operation or control will lock out. Control is grounded through green/yellow wire routed to gas valve and manifold bracket screw. Using the schematic diagram, follow the sequence of operation through the different modes. Read and follow the wiring diagram very carefully.

NOTE: If a power interruption occurs during a call for heat (W), the control will start a 90-sec blower-only ON period two seconds after power is restored, if the thermostat is still calling for gas heating. The amber LED light will flash code 12 during the 90-sec period, after which the LED will be ON continuous, as long as no faults are detected. After the 90-sec period, the furnace will respond to the thermostat normally.

The blower door must be installed for power to be conducted through the blower door interlock switch ILK to the furnace control CPU, transformer TRAN, inducer motor IDM, blower motor BLWM, hot-surface igniter HSI, and gas valve GV.

1. **Heating**
   The wall thermostat "calls for heat," closing the R-to-W circuit. The furnace control performs a self-check, verifies the pressure switch contacts PRS are open, and starts the inducer motor IDM.
   a. **Inducer Prepurge Period**- As the inducer motor IDM comes up to speed, the pressure switch contacts PRS close, 24 VAC power is supplied for a field installed humidifier at the HUM terminal and the control begins a 15-sec prepurge period.
   b. **Igniter Warm-Up**- At the end of the prepurge period, the Hot-Surface igniter HSI is energized for a 17-second igniter warm-up period.
   c. **Trial-for-Ignition Sequence**- When the igniter warm-up period is completed, the main gas valve relay contacts GVR close to energize the gas valve GV, the gas valve opens, The gas valve GV permits gas flow to the burners where it is ignited by the HSI. Five seconds after the GVR closes, a 2-second flame proving period begins. The HSI igniter will remain energized until the flame is sensed or until the 2-second flame proving period begins.
   d. **Flame-Proving**- When the burner flame is proved at the flame-proving sensor electrode FSE, the furnace control CPU begins the blower-ON delay period and continues to hold the gas valve GV open. If the burner flame is not proved within two seconds, the control CPU will close the gas valve GV, and the control CPU will repeat the ignition sequence for up to three more Trials-For-Ignition before going to Ignition-Lockout. **Lockout will be reset** automatically after three hours or by momentarily interrupting 115 vac power to the furnace, or by interrupting 24 vac power at SEC1 or SEC2 to the furnace control CPU (not at W, G, R, etc.) If flame is proved when flame should not be present, the furnace control CPU will lock out of Gas-Heating mode and operate the inducer motor IDM until flame is no longer proved.
   e. **Blower-On Delay**- If the burner flame is proven, the blower motor is energized on HEAT speed 25 sec after the gas valve GV is energized.
   Simultaneously, the electronic air cleaner terminal EAC-1 is energized and remains energized as long as the blower motor BLWM is energized.
   f. **Heat-Off Delay**- When the thermostat is satisfied, the R-to-W circuit is opened, de-energizing the gas valve GV, stopping gas flow to the burners, and de-energizing the 24-v humidifier terminal 24VAC HUM. The inducer motor IDM will remain energized for a 5-second post-purge period. Then turn off the inducer motor. The blower motor BLWM and air cleaner terminal EAC 1 will remain energized for 90, 120, 150, or 180 seconds (depending on the HEAT-OFF delay selection). The furnace control CPU is factory-set for a 120-second Heat-Off Delay.
2. **Cooling mode**
   The thermostat "calls for cooling".

a. **Single-Speed Cooling-**
See Fig. 28 for thermostat connections
The thermostat closes the R-to-G-and-Y circuits. The R-to- Y circuit starts the outdoor unit, and the R-to-G-and-Y/Y2 circuits start the furnace blower motor BLWM on cooling airflow. Cooling airflow is based on the A/C selection (shown in Fig. 46). The electronic air cleaner terminal EAC-1 is energized with 115 vac when the blower motor BLWM is operating.
When the thermostat is satisfied, the R-to-G-and-Y circuits are opened. The outdoor unit will stop, and the furnace blower motor BLWM will continue operating at cooling airflow for an additional 90 seconds. Jumper Y/Y2 to DHUM to reduce the cooling off-delay to 5 seconds, see Fig. 44.

b. **Single-Stage Thermostat and Two-Speed Cooling (Adaptive Mode) -**
See Fig. 28 for thermostat connections.

This furnace can operate a two-speed cooling unit with a single-stage thermostat because the furnace control CPU includes a programmed adaptive sequence of controlled operation, which selects low-cooling or high-cooling operation. This selection is based upon the stored history of the length of previous cooling period of the single-stage thermostat.

NOTE: The air conditioning relay disable jumper ACRDJ must be connected to enable the adaptive cooling mode in response to a call for cooling, see Fig. 44. When ACRDJ is in place the furnace control CPU can turn on the air conditioning relay ACR to energize the Y/Y2 terminal and switch the outdoor unit to high-cooling.

The furnace control CPU can start up the cooling unit in either low- or high-cooling. If starting up in low-cooling, the furnace control CPU determines the low-cooling on-time (from 0 to 20 minutes) which is permitted before switching to high-cooling. If the power is interrupted, the stored history is erased and the furnace control CPU will select low-cooling for up to 20 minutes and then energize the air conditioning relay ACR to energize the Y/Y2 terminal and switch the outdoor unit to high-cooling, as long as the thermostat continues to call for cooling. Subsequent selection is based on stored history of the thermostat cycle times.
The wall thermostat “calls for cooling”, closing the R-to-G-and-Y circuits. The R-to-Y1 circuit starts the outdoor unit on low-cooling speed, and the R-to-G-and-Y1 circuits starts the furnace blower motor BLWM at low-cooling airflow which is the true on-board CF selection, see Fig. 46.
If the furnace control CPU switches from low-cooling to high-cooling, the furnace control CPU will energize the air conditioning relay ACR. When the air conditioning relay ACR is energized the R-to-Y1-and-Y2 circuits switch the outdoor unit to high-cooling speed, and the R-to-G-and-Y1-and-Y/Y2 circuits transition the furnace blower motor BLWM to high-cooling airflow. High-cooling airflow is based on the A/C selection, see Fig. 46.

NOTE: When transitioning from low-cooling to high-cooling the outdoor unit compressor will shut down for 1 minute while the furnace blower motor BLWM transitions to run at high-cooling airflow.
The electronic air cleaner terminal EAC-1 is energized with 115 vac whenever the blower motor BLWM is operating.

When the thermostat is satisfied, the R-to-G-and-Y circuit are opened. The outdoor unit stops, and the furnace blower BLWM and electronic air cleaner terminal EAC-1 will remain energized for an additional 90 seconds. Jumper Y1 to DHUM to reduce the cooling off-delay to 5 seconds, see Fig. 44.

c. **Two-Stage Thermostat and Two-Speed Cooling**
See Fig. 28 for thermostat connections

NOTE: The air conditioning relay disable jumper ACRDJ must be disconnected to allow thermostat control of the outdoor unit staging, see Fig. 44.

The thermostat closes the R-to-G-and-Y1 circuits for low-cooling or closes the R-to-G-and-Y1-and-Y2 circuits for high-cooling. The R-to-Y1 circuit starts the outdoor unit on low-cooling speed, and the R-to-G-and-Y1 circuit starts the furnace blower motor BLWM at low-cooling airflow which is the true on-board CF selection as shown in Table 13 (and also Fig. 46). The R-to-Y1-and-Y2 circuits start the outdoor unit on high-cooling speed, and the R-to- G-and-Y/Y2 circuits start the furnace blower motor BLWM at high-cooling airflow. High-cooling airflow is based on the A/C (air conditioning) selection, see Fig. 46.
The electronic air cleaner terminal EAC-1 is energized with 115 vac whenever the blower motor BLWM is operating.
When the thermostat is satisfied, the R-to-G-and-Y1 or R-to-G-and-Y1-and-Y2 circuits are opened. The outdoor unit stops, and the furnace blower BLWM and electronic air cleaner terminal EAC-1 will remain energized for an additional 90 seconds. Jumper Y1 to DHUM to reduce the cooling off-delay to 5 seconds, see Fig. 44.

3. **Thermidistat Mode**
See Fig. 28 for thermostat connections.
The dehumidification output, DHUM on the thermostat should be connected to the furnace control thermostat terminal DHUM. When there is a dehumidify demand, the DHUM input is activated, which means 24 vac signal is removed from the DHUM input terminal. In other words, the DHUM input logic is reversed. The DHUM input is turned ON when no dehumidify demand exists. Once 24 vac is detected by the furnace control on the DHUM input, the furnace control operates in Thermidistat mode. If the DHUM input is low for more than 48 hours, the furnace control reverts back to non-Thermidistat.
The cooling operation described in item 3. above also applies to operation with a thermostat with humidity control. The exceptions are listed below:
   a. **Low cooling**-When the R-to-G-and-Y1 circuit is closed and there is a demand for dehumidification, the furnace blower motor BLWM will drop the blower airflow to 90 percent of low-cooling airflow which is the true on-board CF selection as shown in Table 13 and Fig. 46.
   b. **High cooling**-When the R-to-G-and Y/Y2 circuit is closed and there is a demand for dehumidification, the furnace blower motor BLWM will drop the blower airflow to 90 percent of high-cooling airflow. High-cooling airflow is based on the A/C (air conditioning) selection shown in Fig. 46.
   c. **Cooling off-delay**-When the “call for cooling” is satisfied and there is a demand for dehumidification, the cooling blower-off delay is decreased from 90 seconds to 5 seconds.
4. **Continuous Blower Mode**
When the R-to-G circuit is closed by the thermostat, the blower motor BLWM will operate at continuous blower airflow. Continuous blower airflow selection is initially based on the CF selection shown in Table 13 and Fig. 46 Factory default is shown in Table 13. Terminal EAC-1 is energized as long as the blower motor BLWM is energized.

During a call for heat, the furnace control CPU will transition the blower motor BLWM to continuous blower airflow or heat airflow whichever is lowest. The blower motor BLWM will remain ON until the main burners ignite then shut OFF and remain OFF for the blower-ON delay (25 seconds in heat), allowing the furnace heat exchangers to heat up more quickly, then restarts at the end of the blower-ON delay period at heat.

The blower motor BLWM will revert to continuous-blower airflow after the heating cycle is completed.

When the thermostat "calls for low-cooling", the blower motor BLWM will switch to operate at low-cooling airflow. When the thermostat is satisfied, the blower motor BLWM will operate an additional 90 seconds at low-cooling airflow before transitioning back to continuous-blower airflow.

When the thermostat "calls for high-cooling", the blower motor BLWM will operate at high cooling airflow. When the thermostat is satisfied, the blower motor BLWM will operate an additional 90 seconds at high-cooling airflow before transitioning back to continuous-blower airflow. When the R-to-G circuit is opened, the blower motor BLWM will continue operating for an additional 5 seconds, if no other function requires blower motor BLWM operation.

Continuous Blower Speed Selection from Thermostat To select different continuous-blower airflow from the room thermostat, momentarily turn off the FAN switch or push button on the room thermostat for 1-3 seconds after the blower motor BLWM is operating. The furnace control CPU will shift the continuous-blower airflow from the factory setting to the next highest CF selection airflow as shown in Table 13 and Fig. 46. Momentarily turning off the FAN switch again at the thermostat will shift the continuous-blower airflow up one more increment. If you repeat this procedure enough you will eventually shift the continuous-blower airflow to the lowest CF selection as shown in Table 13 and Fig. 46. The selection can be changed as many times as desired and is stored in the memory to be automatically used following a power interruption.

NOTE: If the blower-off delay is set to the maximum, the adjustable continuous-fan feature is locked (i.e., fan speed cannot be changed from its current setting).

5. **Heat pump**
   See Fig. 28 for thermostat connections.
   When installed with a heat pump, the furnace control automatically changes the timing sequence to avoid long blower off times during demand defrost cycles. Whenever W/W1 is energized along with Y1 or Y/Y2, the furnace control CPU will transition to or bring on the blower motor BLWM at cooling airflow or low-heat airflow, whichever is lowest. The blower motor BLWM will remain on until the main burners ignite then shut OFF and remain OFF for 25 seconds before coming back on at heating airflow. When the W/W1 input signal disappears, the furnace control begins a normal inducer post-purge period while changing the blower airflow. If Y/Y2 input is still energized the furnace control CPU will transition the blower motor BLWM airflow to cooling airflow. If Y/Y2 input signal disappears and the Y1 input is still energized the furnace control CPU will transition the blower motor BLWM to low-cooling airflow. If both the Y1 and Y/Y2 signals disappear at the same time, the blower motor BLWM will remain on at low-heat airflow for the selected blower-OFF delay period. At the end of the blower- OFF delay, the blower motor BLWM will shut OFF unless G is still energized, in which case the blower motor BLWM will operate at continuous blower airflow.
6. **Component test**
   The furnace features a component test system to help diagnose a system problem in the case of a component failure. To initiate the component test procedure, ensure that there are no thermostat inputs to the control and all time delays have expired. Turn on setup switch SW1-6, see Fig. 45.

NOTE: The component test feature will not operate if the control is receiving any thermostat signals or until all time delays have expired.

The component test sequence is as follows:

a. The furnace control CPU turns the inducer motor ON and keeps it ON through step c.
b. After waiting 10 seconds the furnace control CPU turns the hot surface igniter ON for 15 seconds, then OFF.
c. The furnace control CPU then turns the blower motor BLWM on at 50 percent torque for 15 seconds, then OFF.

NOTE: The EAC terminals are energized when the blower is operating.

After the component test is completed, status code 11 will show. See component test section or Service Label (Fig. 43) for explanation of status codes.

NOTE: To repeat component test, turn setup switch SW1-6 to OFF and then back ON.

Wiring Diagram

Refer to Fig. 44 for wiring diagram.

Troubleshooting

Refer to the service label (see Fig. 43). The Troubleshooting Guide (see Fig.) can be a useful tool in isolating furnace operation problems. Beginning with the word "Start," answer each question and follow the appropriate arrow to the next item. The Guide will help to identify the problem or failed component. After replacing any component, verify correct operation sequence.

TROUBLESHOOTING GUIDE

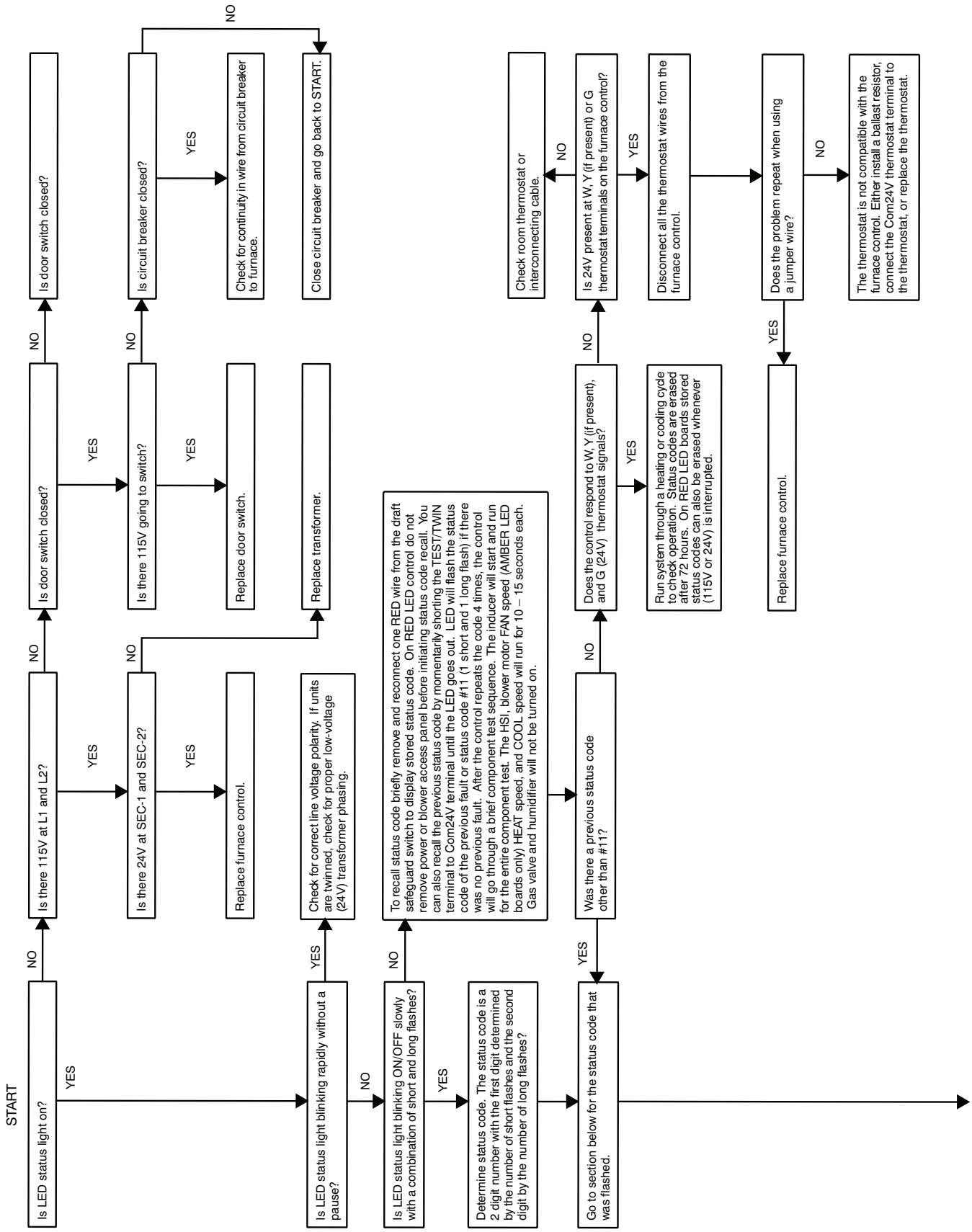

A190024

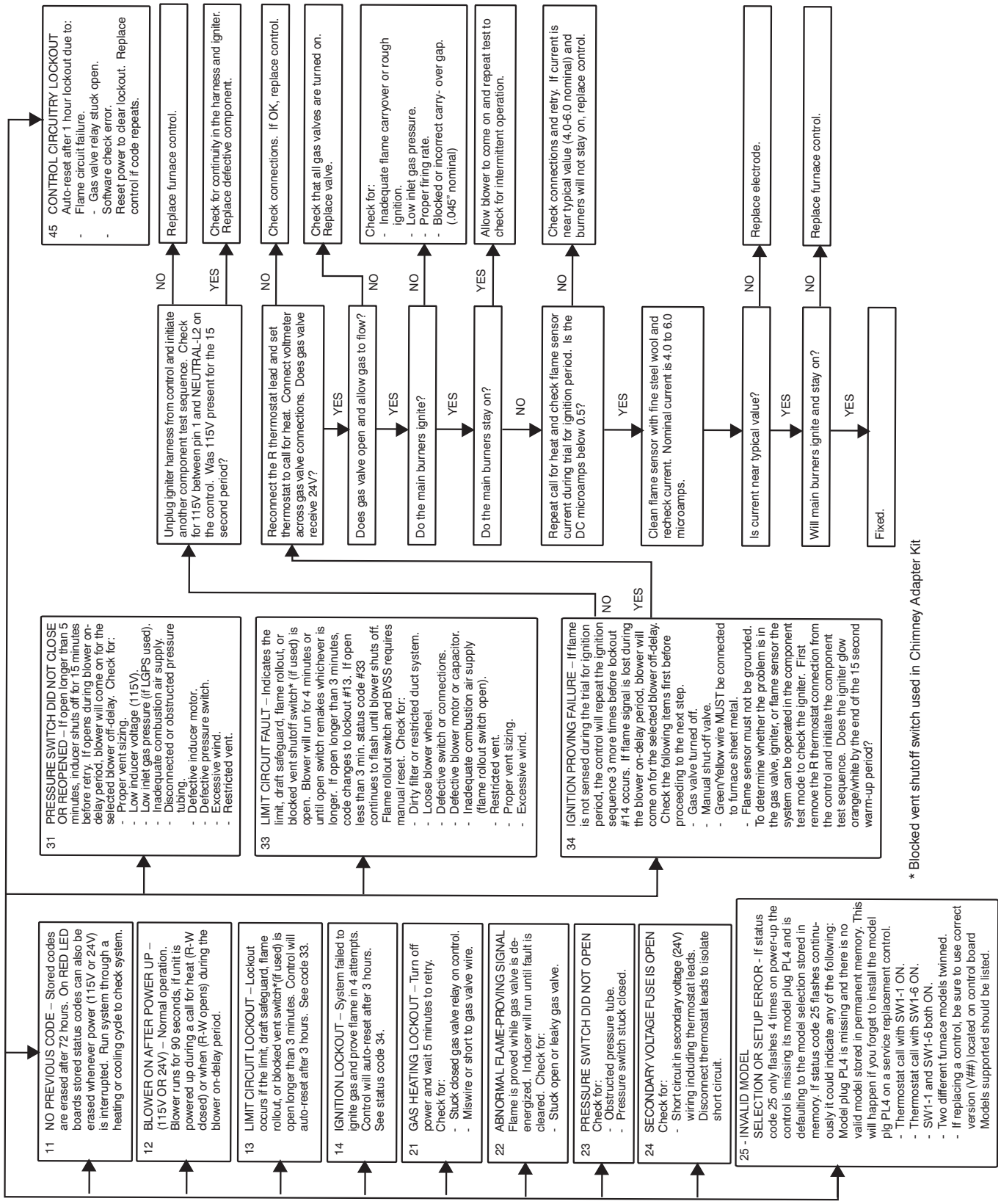

A200304

Fig. 52 – Troubleshooting Guide

PARTS REPLACEMENT INFORMATION GUIDE

CASING GROUP

Outer door and Blower door
Top filler plate
Bottom filler plate
Bottom enclosure

ELECTRICAL GROUP

Control bracket
Junction box
Limit switch(es)
Circuit board
Door switch
Transformer
Wiring harness 115v
Wiring harness 24v

BLOWER GROUP

Blower cutoff and Blower motor
Blower housing
Blower wheel
Grommet and Power choke (where used)

GAS CONTROL GROUP

Manifold
Burner assembly
Orifice
Flame sensor
Hot surface igniter
Gas valve
Manual reset limit switches
Burner support assembly

HEAT EXCHANGER GROUP

Heat exchanger cell
Cell panel
Lox NOx baffle (California models only)

INDUCER GROUP

Inducer motor and Inducer wheel
Pressure switch
Housing assembly
Vent elbow assembly
Draft safeguard switch

TO OBTAIN INFORMATION ON PARTS: Consult your installing dealer or classified section of your local telephone directory under “Heating Equipment” or “Air Conditioning Contractors and Systems” headings for dealer listing by brand name or contact:

BRYANT HEATING & COOLING SYSTEMS
Consumer Relations Department
P.O. Box 4952
Syracuse, New York 13221-4952
1-800-428-4326

Have available the model number, series number, and serial number located on the unit rating plate to ensure correct replacement part.

Example of Model Number

MODEL	MAJOR SERIES	CLG CAPACITY	HTG INPUT	MOTOR TYPE	WIDTH	VOLTAGE
820S	A	48	070	V	17	-

⚠ WARNING

FIRE, EXPLOSION, ELECTRICAL SHOCK AND CARBON MONOXIDE POISONING HAZARD

Failure to follow this warning could result in dangerous operation, personal injury, death or property damage.
Improper installation, adjustment, alteration, service, or maintenance can cause personal injury, property damage, or death. Consult a qualified installer, service agency, or your local gas supplier for information or assistance. The qualified installer or service agency must use only factory-authorized replacement parts, kits, or accessories when modifying this product.

© 2021 Carrier. All rights reserved.
Edition Date: 08/21
Catalog No:II820SA-02 REV A
A Carrier Company
Replaces:II820SA-02
Manufacturer reserves the right to change, at any time, specifications and designs without notice and without obligations.