BABATTRY
DC Power System

Installation Instructions

NOTE: This optional accessory is intended for use with 249VAN outdoor unit ONLY. Read the entire instruction manual before starting installation.

SAFETY CONSIDERATIONS 1
GENERAL 2
DC Power System Installation Guidelines 2
Overview 2
Permitted Installation Locations 2
Prohibited Installation Locations 2
Application Restrictions 2
Altitude Limitation 2
Drainage Requirement 2
Consequences of Non-Compliance 2
Pre-Installation Checklist for DC Power System 2
INSTALLATION 3
Install on Level Concrete or Composite Mounting Pad 3
Check Equipment and Job Site 3
General Clearance Requirements 3
Location and Environmental Considerations 3
Code Compliance and Safety Distances 3
Installation Weather Conditions 5
Install DC Power System Enclosure 5
Make Electrical Connections Between ODU and DC Power System 5
Install Battery Into Enclosure 6
Install Cellular Antenna 7
Install Electrical Accessories 7
Start-Up 8
Apply Safety Labels 8
WIRING DIAGRAM 9
DIMENSIONS 10
FINAL CHECKS 11
DC POWER SYSTEM SERVICE AND MAINTENANCE 11
TECHNICAL SPECIFICATIONS 12

SAFETY CONSIDERATIONS

IMPORTANT: This appliance shall only be installed by EPA qualified personnel having appropriate certification. This appliance is not intended for use by persons (including children) with reduced physical, sensory or mental capabilities or lack of experience and knowledge, unless they have been given supervision or instruction concerning use of the appliance by a person responsible for their safety.

Improper installation, adjustment, alteration, service, maintenance, or use can cause explosion, fire, electrical shock, or other conditions which may cause death, personal injury, or property damage. Consult a qualified installer, service agency, or your distributor or branch for information or assistance. The qualified installer or agency must use factory-authorized kits or accessories when modifying this product. Refer to the individual instructions packaged with the kits or accessories when installing.

Follow all safety codes. Wear safety glasses, protective clothing, and work gloves. Have a fire extinguisher rated for use with lithium batteries available. Before servicing / operating on the DC Power System make sure the AC disconnect is in the OFF position.

Read these instructions thoroughly and follow all warnings or cautions included in literature and attached to the unit. Consult local building codes and current editions of the National Electrical Code (NEC) NFPA 70. In Canada, refer to current editions of the Canadian electrical code CSA 22.1.

Recognize safety information. This is the safety-alert symbol ⚠. When you see this symbol on the unit and in instructions or manuals, be alert to the potential for personal injury.

Understand these signal words; DANGER, WARNING, and CAUTION. These words are used with the safety-alert symbol. DANGER identifies the most serious hazards which will result in severe personal injury or death. WARNING signifies hazards which could result in personal injury or death. CAUTION is used to identify unsafe practices which may result in minor personal injury or product and property damage. NOTE is used to highlight suggestions which will result in enhanced installation, reliability, or operation.

UL 9540A has been performed by UL in project 4791758128.1 dated 05/30/2025.

⚠ WARNING

ELECTRICAL SHOCK HAZARD

Failure to follow this warning could result in personal injury or death.

Before installing, modifying, or servicing system, main electrical disconnect switch must be in the OFF position. There may be more than one (1) disconnect switch. Lock out and tag switch with a suitable warning label.

⚠ WARNING

EXPLOSION HAZARD

Failure to follow this warning could result in death, serious personal injury, and/or property damage.

- Do not expose battery to open flame or flammable materials as it may lead to fire or explosion.
- Do not place battery in direct sunlight for extended periods.

⚠ CAUTION

PERSONAL INJURY AND/OR UNIT DAMAGE HAZARD

Failure to follow this CAUTION could lead to unit or property damage.

- Store in cool dry place with ample ventilation.
- Do not store near water sources.
- Store product on flat surface.
- Store product out of reach of children and animals.

⚠ WARNING

PERSONAL INJURY, FIRE AND/OR UNIT DAMAGE HAZARD

Do not damage unit by dropping, impacting, cutting or penetrating with sharp object as it may result in leakage of electrolyte or fire.

Do not touch any liquid spilled from the product.

Always handle the battery wearing insulated gloves.

Do not charge or discharge damaged battery.

⚠ WARNING

ELECTRICAL SHOCK HAZARD

Failure to follow this warning could result in personal injury or death. The unit cabinet must have an uninterrupted or unbroken ground to minimize personal injury if an electrical fault should occur. The ground may consist of electrical wire or metal conduit when installed in accordance with existing electrical codes.

GENERAL

DC Power System Installation Guidelines

Requirements and Restrictions for Residential Applications

Overview

The DC Power System is designed and approved exclusively for single dwelling residential applications. To ensure safe operation, system reliability, and warranty protection, strict adherence to the following installation requirements is mandatory.

Permitted Installation Locations

- Concrete pad at ground level
- Composite pad at ground level

Installation must occur only on a ground-level concrete or composite pad. This ensures system stability, proper grounding, and compliance with manufacturer safety protocols.

Prohibited Installation Locations

- Rooftops
- Racks
- Frames
- Any structure other than a ground-level concrete or composite pad
- Flood zones

The DC Power System must not be installed on rooftops, racks, frames, or any elevated or alternative structures. Installation in flood zones or areas lacking adequate drainage is strictly prohibited. Such practices may result in system malfunction, increased safety hazards, and/or voided warranty.

Application Restrictions

- Single dwelling residential properties only
- Multi-dwelling residences, commercial, or industrial properties are not permitted

This system is intended solely for single dwelling residential use. Installation in any other property type is not allowed and may void system certification and warranty.

Altitude Limitation

Maximum installation altitude: 6,500 ft. (2,000 meters) above sea level.

Do not install the DC Power System above the specified altitude limit, as performance and safety may be compromised beyond this threshold.

Drainage Requirement

Installation should be carried out only in areas with adequate drainage to prevent water accumulation and potential damage to the system.

Consequences of Non-Compliance

Failure to comply with the above requirements may result in:

- System malfunction
- Voided warranty
- Safety hazards

For optimal performance and safety, follow all installation guidelines precisely.

Pre-Installation Checklist for DC Power System

Checklist for Installing or Servicing the DC Power System

1. **Turn Off Power**: Before beginning any installation or service work, always turn off power to the Outdoor Unit using the outdoor unit disconnect switch.
2. **Consult Site Plan:** Review the site plan to confirm the designated installation location of the DC Power System.
3. **Verify Proper Location:** Ensure the unit is installed at least 3 feet away from windows, doors, and other units according to NFPA 855 and IRC requirements.
4. **Inspect Components:** Before installation, carefully inspect all components of the DC Power System for any signs of damage or corrosion, including the battery, cable harnesses, control boards, and electrical panels.
5. **Check Shipping Packing List:** Verify that all components listed on the shipping packing list are present and accounted for.
6. **Ensure Weather-Proofing:** Confirm that the DC Power System control board enclosures are weather-proof to prevent exposure and damage.
7. **Document and Report Issues:** If any damage or missing components are discovered, document the findings and report them to the Supplier. Do not install any component that appears damaged.
8. **Verify Grounding:** Check that the DC Power System is properly grounded according to NFPA 855.15.4.1. Refer to “Connecting Quick Connect Cables to the Battery” section of the installation instructions for proper ground connection procedures.

Following this checklist will help ensure a safe, compliant, and successful installation or servicing of your DC Power System.

DC Power System Shipping Contents

The following items will be included in the DC Power System shipment:

- Daughter Board
- Necessary harness
- Anchor straps
- Labels

Please verify that all listed components are present upon receipt. If any items are missing, contact your supplier or technical support team for assistance.

INSTALLATION

IMPORTANT: Check rating plate to be sure unit matches job specifications.

Install on Level Concrete or Composite Mounting Pad

This unit is required to be attached to a ground-level concrete or composite pad. Anchor straps for tie down must be used and screwed to the outdoor unit base pan as well as the Enclosure top and base pan (see Fig. 1). Refer to unit mounting pattern in Fig. 3 to determine anchor strap tie down locations.

Anchor straps provided with unit are required for all installations.

For seismic and hurricane requirements contact local distributor for details and PE (Professional Engineer) certification, if required. Contact local distributor for details and PE (Professional Engineer) certification, if required.

NOTE: Unit must be level to within ±2° (±3/8 in./ft.±9.5 mm/m) per compressor manufacturer specifications.

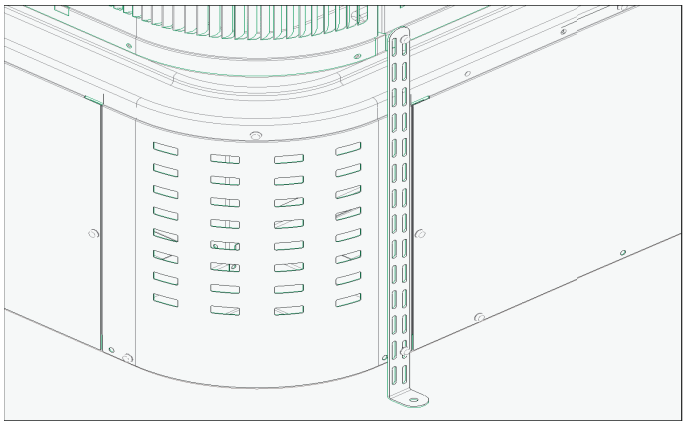

Fig. 1 – Anchor Strap Tiedown and Location

Maximum allowed elevation for this DC Power System is 6,500 feet (2,000 meters) above sea level. Consult the Application Guideline and Service Manual - Residential Split System Air Conditioners and Heat Pumps for wind baffle construction.

Check Equipment and Job Site

Unpack Unit

Move the unit to final location. Remove carton taking care not to damage unit.

Inspect Equipment

File claim with shipping company prior to installation if shipment is damaged or incomplete. Locate unit rating plate on unit corner panel.

General Clearance Requirements

Refer to Fig. 2. When installing the unit, it is essential to allow adequate space for airflow, wiring, refrigerant piping, and service access. To ensure safe and efficient operation, maintain the following clearances:

- Allow at least 24 inches (610 mm) of clearance at the Battery access panel.
- Maintain a minimum of 96 inches (2.4 m) of clearance above the unit.
- Provide 6 inches (152 mm) of clearance on one side of the unit and 12 inches (305 mm) on all remaining sides for proper airflow.
- Keep a distance of 36 inches (914 mm) between units and between the unit and any doors or windows.

Location and Environmental Considerations

Position the unit so that water, snow, or ice from the roof or eaves cannot fall directly onto it. This helps prevent potential damage and ensures reliable operation.

Additionally, the installation site should allow water to drain away from the unit.

Code Compliance and Safety Distances

According to NFPA 855 and the International Residential Code (IRC), units should be installed at least 3 feet away from doors, windows, and other units. Separation distances from walls and other units should follow the allowances determined by UL9540A testing.

When anchoring the straps to the concrete or composite pad, ensure the straps are adequately secured. In some cases, field supplied hardware may be required to ensure straps do not become detached from pad.

Always consult the latest code requirements and manufacturer guidelines when planning installation.

NOTE: The following image is an example image. 6 inches is allowed on one side of the unit adjacent to the control box. The remaining side adjacent to the control box should be 24 inches.

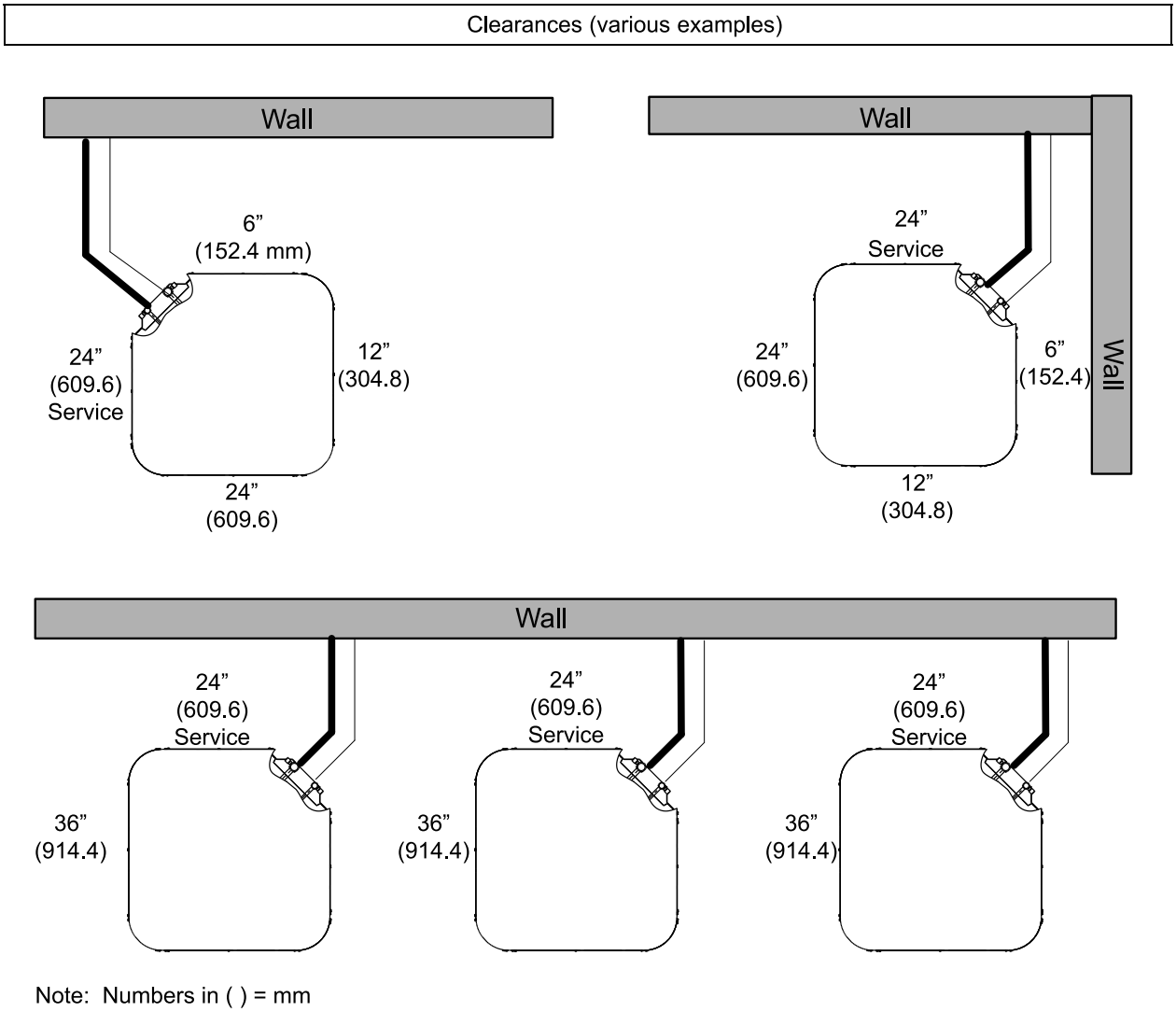

Fig. 2 – Clearance Requirements

C

Installation Weather Conditions

The installation of the DC Power System should only occur for outdoor ambient temperature in the range of 34°F to 118°F (1°C to 48°C) and humidity below 95%.

Avoid direct sunlight, rain and/or snow exposure to the Battery during installation.

Do not install the DC Power System outside the recommended temperature and humidity range.

Install DC Power System Enclosure

⚠ CAUTION

CUT HAZARD

Failure to follow this caution may result in personal injury.

Sheet metal parts may have sharp edges or burrs. Use care and wear appropriate protective clothing and gloves when handling parts.

1. Install the Enclosure onto the pad in the orientation that matches with the ODU Refrigeration Service Disconnects. Match the line set and harness corner.
2. Once the Enclosure is installed, the outdoor unit can be installed on top of the Enclosure. See Fig. 3.

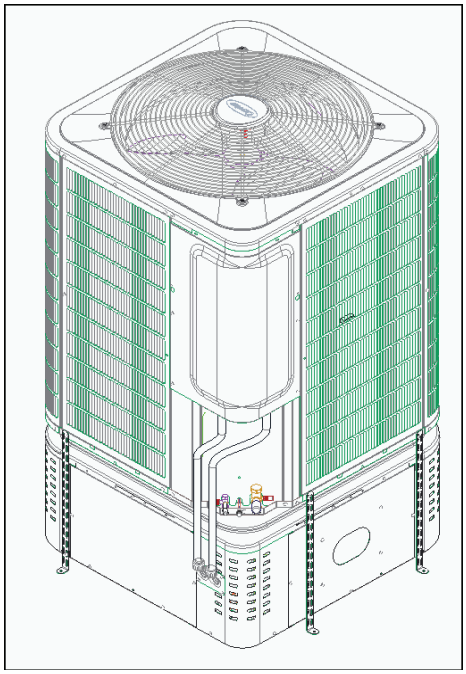

Fig. 3 – ODU Unit Installed on Enclosure

3. Install required anchor strap tie downs. Refer to Fig. 1

IMPORTANT: Do not block access panels when installing anchors.

NOTE: SEE ODU Installation Instructions for installation of the ODU refrigeration lines and electrical connections.

⚠ WARNING

PERSONAL INJURY, FIRE AND/OR UNIT DAMAGE HAZARD

Use caution when brazing near the DC Power System and the DC Power Harness Electrical Connections (as seen in Fig. 4).

Make Electrical Connections Between ODU and DC Power System

⚠ WARNING

EECTRICAL SHOCK HAZARD

Failure to follow this warning could result in personal injury or death.

Turn of AC disconnect.

Avoid physical contact with terminals.

Residual voltage is always present on DC terminals and the battery modules cannot be turned off.

1. Turn off AC disconnect.
2. Route harness from the Enclosure to the ODU Control VFD box.
   a. Knockouts on the base of the ODU control box need to be removed (using a screwdriver).
   b. Use separate knockouts for the DC Power Harness and the Communication Harness and wires. See Fig. 4.

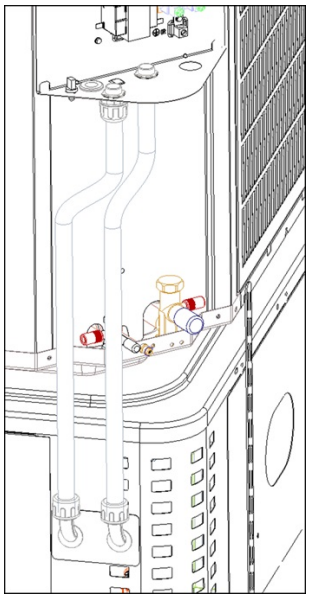

Fig. 4 – DC Power Harness and Communication Harness

3. Replace VFD cover with the daughter-board-included VFD Cover (snap in). See Fig. 5. Attach Daughter Board communication cables between the VFD Daughter Board. Daughter Board will be sent with one end plugged into the Daughter Board so only the ODU control board will need to be plugged in.

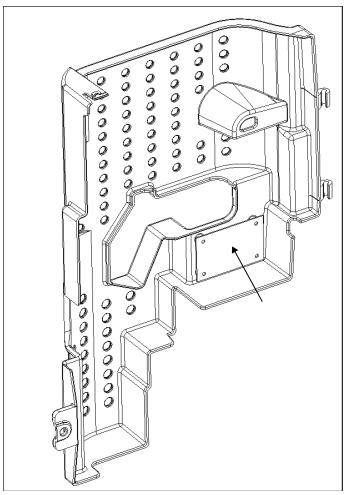

Fig. 5 – Daughter Board Installed in VFD Cover

4. Connect the Wire Harness labeled RS485 to the J2 Connector on the Daughter Board as shown in Fig. 6 .
5. Attach DC Power Harness quick-connect wires DC+, DC - to the ODU Control Board Connectors (CN29 & CN28). See Fig. 6 .

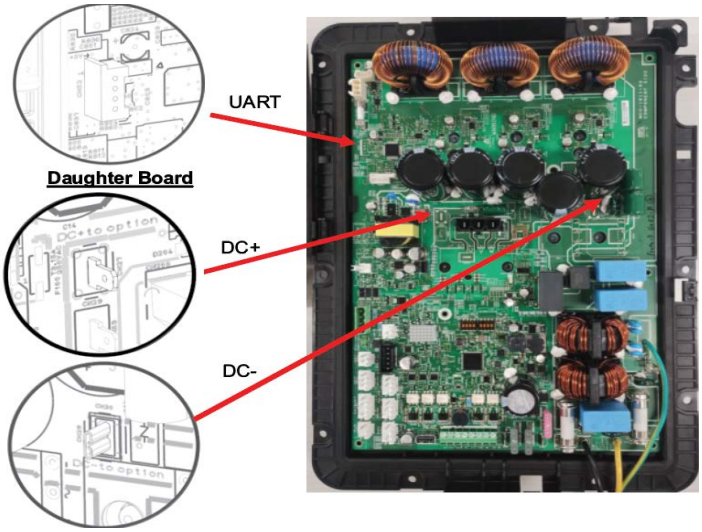

Fig. 6 – ODU Control Board Connectors

6. Attach the CCN Harness to the ODU CCN (Green) Connector.
7. Connect ground wire from control panel to unit.
8. Secure the conduit for the DC Power Harness and Communication Harness to the knockout holes on the bottom of the ODU Control Box following the routing shown in Fig. 4 and secure by tightening the nut on the harnesses.

Install Battery Into Enclosure

NOTE: System is designed and limited to hold one (1) 5kwh battery. Verify residential limit of kWh storage determined by local code.

⚠ WARNING

PERSONAL INJURY HAZARD

Failure to follow this warning could result in personal injury.

Battery is heavy (120 lb / 54 kg). Lifting can cause muscle strain or back injury. Use lifting aids and proper lifting techniques when moving.

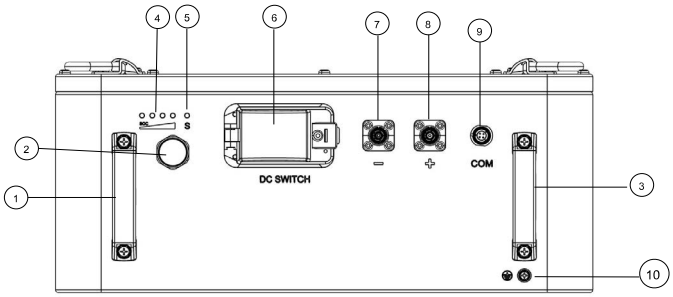

No.	Description	No.	Description
1	Handle - A	6	DC Switch
2	Valve	7	DC -
3	Handle - B	8	DC+
4	Indicating LED	9	DCDC COM
5	Status Indicating LED	10	Ground Terminal

Fig. 7 – Battery Components

1. Carefully remove Battery from cardboard box taking care not to damage it.

NOTE: Place Battery in horizontal orientation with silver handles on top.

2. Inspect the Battery for external damage.
3. DO NOT INSTALL if the Battery has been dropped or appears damaged.
4. Open the panel on the Enclosure near battery entrance by removing the four (4) screws on the front panel (see Fig. 8).

NOTE: While installing the Battery, take notice of the Quick Connect Harness. Move the harness out of the Enclosure tray to have easier access for the Battery to slide into the Enclosure.

5. Ensure that the DC Switch located on the Battery is in the OFF position (see Fig. 7, No. 6).
6. Slide the Battery into the Enclosure.

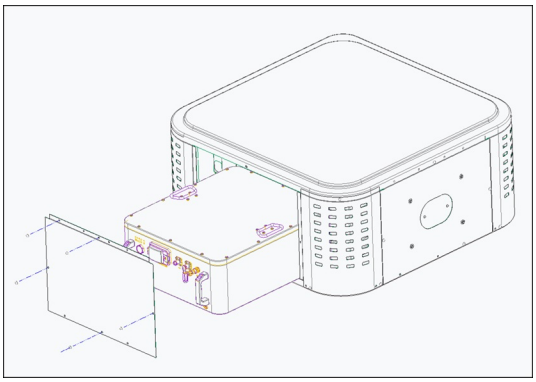

Fig. 8 – Battery Placement into Enclosure and Screw Locations

7. Remove the dust covers from the 3 quick-connect connectors on the battery for "+", "-" and "COM".
8. Properly align the orange power cable with the orange "+" connector on the battery, press the button on the side of the connector in and carefully connect the cables to the battery until you hear an audible "click". Repeat this for the black power cable and the black "-" connector on battery. See Fig. 9.

NOTE: The "+" and "-" connectors on the battery should match the colors of the cables and will make an audible "click" when properly seated. These connectors are keyed and need to be properly aligned before connecting. DO NOT twist the connectors. When removing the cables, fully depress the button on the slide and carefully disconnect, ensuring not to twist the connectors.

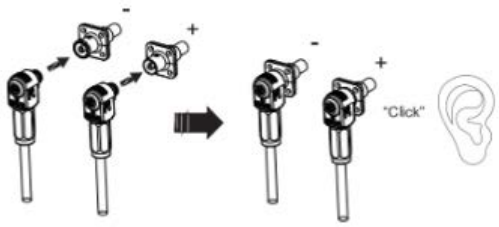

Fig. 9 – Connecting Quick Connect Cables to the Battery

9. Align the "COM" cable with the "COM" connector on the battery and attach the cable to the battery. Secure the connection with the screw connector. See Fig. 10.

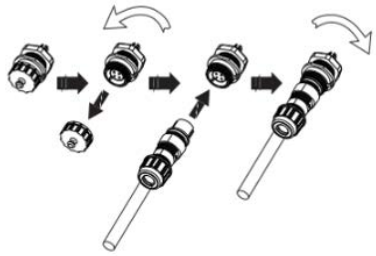

Fig. 10 – Connecting COM Cable with COM Connector

10. Connect Grounding Cable and separate System Ground Cable to specified location under right handle. Refer to Fig. 7, No. 10 for grounding terminal location.
11. Turn the DC Switch located on the front of the Battery (Fig. 7, No. 6) to the ON position.
12. Close the Enclosure Panel for the Battery and re-install the screws removed in step 4.

Install Cellular Antenna

1. Route the antenna cable through the hole in the Enclosure from the antenna location at the top of the outdoor unit and connect the antenna cable to the plastic system controller box inside the DC Power System enclosure.
2. Before removing the adhesive backing, place the antenna on top of the outdoor unit and verify successful connectivity test to ensure best cellular performance.
3. Peel off the adhesive backing and mount the cellular antenna onto the top corner of the Outdoor Unit with the best cellular performance (see Fig. 11)

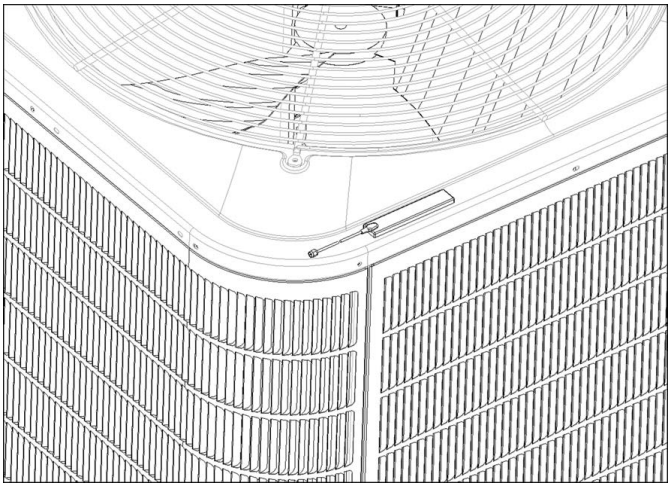

Fig. 11 – Cellular Antenna Installation

Make Electrical Connections

⚠ WARNING

ELECTRICAL SHOCK HAZARD

Failure to follow this warning could result in personal injury or death.

Before installing, modifying, or servicing system, main electrical disconnect switch must be in the OFF position. There may be more than one (1) disconnect switch. Lock out and tag switch with a suitable warning label. Battery DC Switch (Fig. 7, No. 6) must be in the OFF position when the DC Power System is open.

⚠ WARNING

ELECTRICAL SHOCK HAZARD

Failure to follow this warning could result in personal injury or death.

The unit cabinet must have an uninterrupted or unbroken ground to minimize personal injury if an electrical fault should occur. The ground may consist of electrical wire or metal conduit when installed in accordance with existing electrical codes.

Final Wiring Check

IMPORTANT: : Check factory wiring and field wire connections to ensure terminations are secured properly. Check wire routing to ensure wires are not in contact with tubing, sheet metal, etc.

Install Electrical Accessories

Refer to the individual instructions packaged with kits or accessories when installing.

Start-Up

Commissioning Steps:

1. Perform the following before starting the commissioning steps.
   - Verify correct placement of DC Power System
   - Verify correct wiring
   - Verify correct (physical) Cellular Antenna placement
   - Verify correct signage
2. Close electrical disconnects to energize system.
3. Power On Sequence
   - Turn AC service disconnect ON
   - Wait 1 minute for the DC Power System to power ON and allow it to run/complete Power On Self Test
4. Connect Service Tech App (STA) to the DC Power System.
   - Utilizing the STA, perform cloud telemetry/commands test report results
     Note: Safely pause cloud Control commands if you need to re-commission.
   - Follow the steps displayed on STA for commissioning.
   - STA will display results screen of commissioning
   - STA will save/email commissioning report to key stakeholders
   - Disconnect STA

Communication Protocols:

- DC power system uses CAN and RS485 communication protocols.

Follow these steps to properly start up system:

1. After system is evacuated, fully open liquid and vapor service valves.
2. Unit is shipped with valve stem(s) front seated (closed) and caps installed. Replace stem caps after system is opened to refrigerant flow. Replace caps finger-tight and tighten with wrench an additional 1/12 turn.
3. Set room thermostat at desired temperature. Be sure set point is below indoor ambient temperature.
4. Set room thermostat to COOL and fan control to ON or AUTO mode, as desired. Operate unit for 15 minutes. Check system refrigerant charge.

Apply Safety Labels

Install safety labels in accordance to local code, ensure proper labels are installed.

WIRING DIAGRAM

WARNING

ELECTRICAL SHOCK HAZARD

Failure to follow this warning could result in personal injury or death.

Do not supply power to unit with compressor terminal box cover removed.

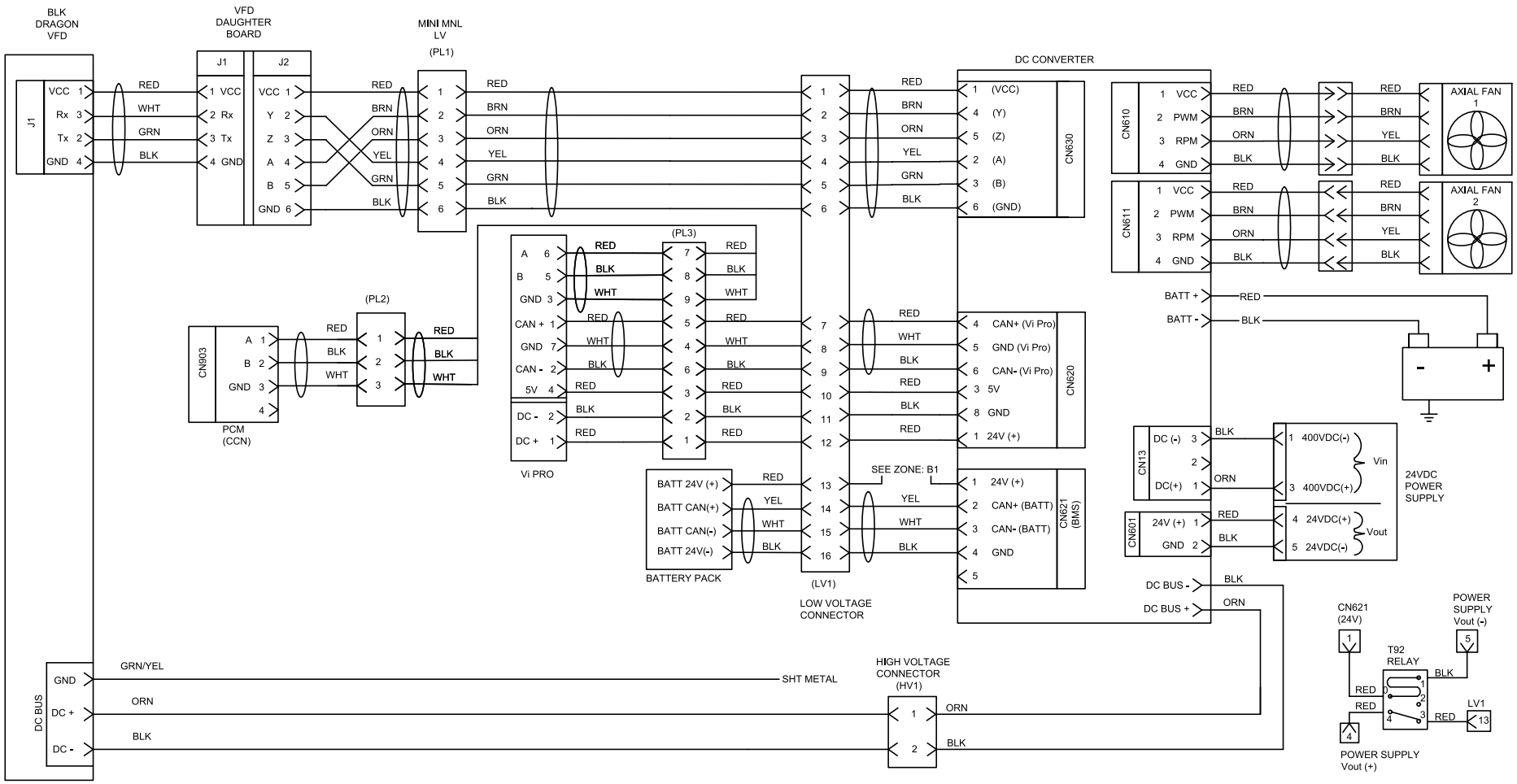

Manufacturer reserves the right to change, at any time, specifications and designs without notice and without obligations.

DIMENSIONS

PACKAGING DIM (IN)	PACKAGING DIM (mm)	SHIPPING WT (LBS)
(23.5,36,36)	(597,914,914)	131

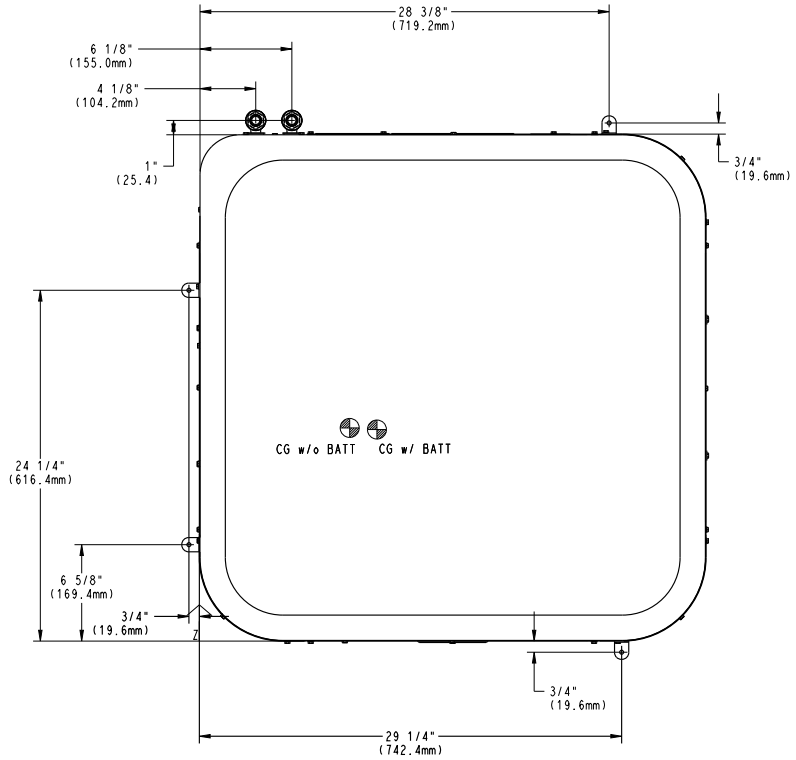

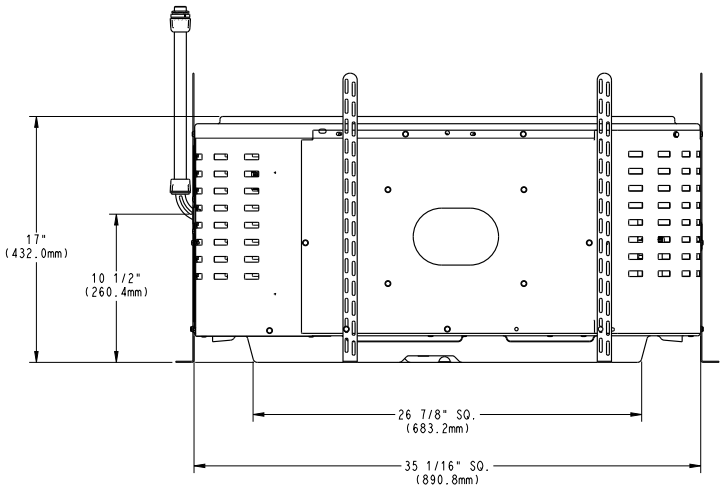

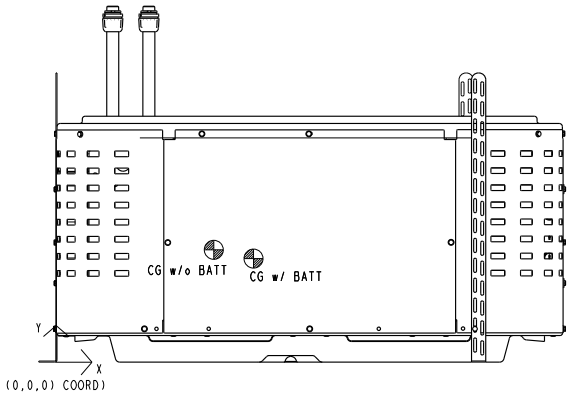

CG COOPD w/ BATT (mm)	CG COORD w/o BATT (mm)
(402.9,177.2,443.6)	(345.8,190.8,441.1)

U.S. EXPORT CLASSIFICATION: Not Subject to Regulation (N.S.R) **MEASUREMENT- DUAL**

PART NUMBER	SHT	REV
SD6094-4	1	-
NEXT SHEET 2		

AUTH

FINAL CHECKS

IMPORTANT: Before leaving job, be sure to do the following:

1. Ensure that all wiring is routed away from tubing and sheet metal edges to prevent rub-through or wire pinching.
2. Ensure that all wiring is secure in unit before adding panels and covers. Securely fasten all panels and covers.
3. Tighten service valve stem caps to 1/12-turn past finger tight.
4. Leave Owner's Manual with owner. Explain system operation and periodic maintenance requirements outlined in manual.
5. Fill out Dealer Installation Checklist and place in customer file.

DC POWER SYSTEM SERVICE AND MAINTENANCE

⚠ WARNING

ELECTRICAL SHOCK HAZARD

Failure to follow this warning could result in personal injury or death.

Before installing, modifying, or servicing system, main electrical disconnect switch must be in the OFF position. There may be more than one (1) disconnect switch. Lock out and tag switch with a suitable warning label.

Service and Maintenance Safety

The DC Power System contains live hazardous voltage and shall only be serviced and maintained by Bryant trained personnel. Read this entire document to understand risks and hazards before servicing this equipment. Prior to service, always shut off or remove the AC disconnect to the HVAC equipment which will disable the electronics in the DC Power System and prevent any system remote control. Always ensure AC power is disconnected before service or maintenance. The AC disconnect on the sub-panel is used to energize the HVAC system. and accessory DC Power System. Additionally, the DC Switch on the Battery MUST be turned to the "OFF" position when the DC Power System is open for service or maintenance. Turn the DC Switch back to the "ON" position before closing the DC Power System and re-energizing the system with the AC disconnect on the sub-panel.

In certain circumstances, Bryant may maintain and/or control the DC Power System and have the ability to start/stop equipment from operating.

⚠ CAUTION

REDUCED SYSTEM STABILITY AND/OR UNIT DAMAGE HAZARD

Failure to follow this CAUTION could result in reduced system stability and/or equipment damage..

Do not remove more than two (2) exterior panels at the same time from the DC Power System. Exterior panels are structural members and provide stability to the DC Power System and associated HVAC accessory components.

Periodic Maintenance

For continuing high performance and to minimize possible equipment failure, periodic maintenance must be performed on this equipment.

Frequency of maintenance may vary depending upon geographic areas, such as coastal applications. See Owner's Manual for information.

Battery Handling, Decommissioning, and Disposal

For the decommissioning and recycling of the LFP battery pack for Bryant's Battery enabled heat pump, you must contact Bryant Support to initiate the process. Only qualified, trained professionals can handle the complex, potentially hazardous LFP battery pack. The decommissioning process includes system shutdown, disconnection, removal and shipment by Bryant authorized partners, in accordance with DOT guidelines, to specialized recycling facilities, ensuring 100% of materials are recovered and never landfilled.

Component Replacement, Service, and Accessories

In certain circumstances, the DC Power System may be maintained, monitored, controlled, and/or serviced by Bryant. No maintenance or ongoing inspection of the DC Power System is required by the homeowner. Telemetry from the system will be monitored remotely and any issues observed will be addressed by Bryant. DC Power System Removal, replacement, service and maintenance shall be managed through Bryant and/or its authorized representatives and will only be performed by trained personnel. This equipment has no scheduled maintenance or service needed unless determined by Bryant.

Homeowner Responsibility

Following installation, the homeowner shall ensure that debris does not accumulate around the unit and that minimum service and airflow clearances are maintained at all times. Accumulation of debris around the unit may restrict airflow and service access. The homeowner shall maintain required clearances by keeping the area around the unit free of obstructions.

Manufacturer reserves the right to change, at any time, specifications and designs without notice and without obligations.

TECHNICAL SPECIFICATIONS

	Model Number	BABATTRY
System Technical Specifications	HVAC Nominal Grid Voltage (Input)	208V-230 VAC
	HVAC Grid Type	Split Phase
	HVAC Grid Frequency	60Hz
	HVAC Overcurrent Protection Device	AC Disconnect (MCA) rating
	HVAC Refrigerant Type	R-454B
	Grid Interface	Non Exporting
	DC Power System Connectivity	Cellular, Wi-Fi
	DC Power System Protections	DC Disconnect, DC Reverse Polarity
	Customer Interface	Bryant SmartHome App
Battery Pack Technical Specifications	Battery Type	LiFePO4 (LFP)
	Nominal Battery Energy	5kWh DC
	Maximum Continuous Discharge Power	5kW
	Maximum Continuous Charge Power	5kW
	Battery Operating Voltage	95.7V - 120.5V
	Maximum Continuous Current	50A
Environmental Specifications	Operating Temperature	-10 - 125°F (-23.3 - 51.6°C)
	Operating Humidity	5 - 95%
	Storage Temperature	-10 - 125°F (-23.3 - 51.6°C)
	Maximum Elevation	2000m
	Environment	Outdoor Rated
	DC Power Ingress Rating	IP24
	Battery Ingress Rating	IP65
Compliance Information	Grid Connection	United States
	Certification	Battery - UL 1973, UL 9540A (Tested), DC Converter – UL 60730-1 DC Power System - UL 9540 Heat Pump - UL 60335-2-40 (UL/CSA)
Mechanical Specifications	Dimensions	See dimensional drawing for details
	Weight	See dimensional drawing for details
	Mounting Options	Ground Mounted

Training

My Learning Center is your central location for professional residential HVAC training resources that help strengthen careers and businesses. We believe in providing high quality learning experiences both online and in the classroom.

Access My Learning Center with your HVACpartners credentials at www.mlctraining.com. Please contact us a mylearning@carrier.com with questions.

© 2026 Carrier. All rights reserved.
Edition Date: 06/26
Catalog No: IIBABATTRY001A-03
A Carrier Company
Replaces: IIBABATTRY001A-02

Manufacturer reserves the right to change, at any time, specifications and designs without notice and without obligations.