38MHR
Outdoor Unit Single Zone Ductless System
Sizes 09 to 24

Installation Instructions

NOTE: Read the entire instruction manual before starting the installation.

TABLE OF CONTENTS

	PAGE
SAFETY CONSIDERATIONS	2
PARTS LIST	3
SYSTEM REQUIREMENTS	4
DIMENSIONS − OUTDOOR	5
CLEARANCES − OUTDOOR	8
INSTALLATION TIPS	9
OUTDOOR UNIT INSTALLATION	9
ELECTRICAL DATA	11
CONNECTION DIAGRAMS	11
SYSTEM VACUUM AND CHARGE	12
START−UP	13
OUTDOOR UNIT DIAGNOSTIC GUIDES	13

SAFETY CONSIDERATIONS

Installing, starting up, and servicing air−conditioning equipment can be hazardous due to system pressures, electrical components, and equipment location (roofs, elevated structures, etc.).

Only trained, qualified installers and service mechanics should install, start−up, and service this equipment.

Untrained personnel can perform basic maintenance functions such as coil cleaning. All other operations should be performed by trained service personnel only.

When working on the equipment, observe the precautions in the literature and on tags, stickers, and labels attached to the equipment.

Follow all safety codes. Wear safety glasses and work gloves. Keep a quenching cloth and a fire extinguisher nearby when brazing. Use care in handling, rigging, and setting bulky equipment.

Read these instructions thoroughly and follow all warnings or cautions included in literature and attached to the unit. Consult local building codes and National Electrical Code (NEC) for special requirements. Recognize safety information.

This is the safety−alert symbol ⚠. When you see this symbol on the unit and in instructions or manuals, be alert to the potential for personal injury. Understand these signal words: **DANGER**, **WARNING**, and **CAUTION**. These words are used with the safety−alert symbol. **DANGER** identifies the most serious hazards which **will** result in severe personal injury or death. **WARNING** signifies hazards which **could** result in personal injury or death. **CAUTION** is used to identify unsafe practices which **may** result in minor personal injury or product and property damage.

NOTE is used to highlight suggestions which **will** result in enhanced installation, reliability, or operation.

⚠ WARNING

ELECTRICAL SHOCK HAZARD

Failure to follow this warning could result in personal injury or death.

Before installing, modifying, or servicing system, main electrical disconnect switch must be in the **OFF** position. There may be more than 1 disconnect switch. Lock out and tag switch with a suitable warning label.

⚠ WARNING

EXPLOSION HAZARD

Failure to follow this warning could result in death, serious personal injury, and/or property damage.

Never use air or gases containing oxygen for leak testing or operating refrigerant compressors. Pressurized mixtures of air or gases containing oxygen can lead to an explosion.

⚠ CAUTION

EQUIPMENT DAMAGE HAZARD

Failure to follow this caution may result in equipment damage or improper operation.

Do not bury more than 36 in. (914 mm) of refrigerant pipe in the ground. If any section of pipe is buried, there must be a 6 in. (152 mm) vertical rise to the valve connections on the outdoor units. If more than the recommended length is buried, refrigerant may migrate to the cooler buried section during extended periods of system shutdown. This causes refrigerant slugging and could possibly damage the compressor at start−up.

PARTS LIST

Table 1—Parts List

PART NO.	PART NAME	QTY.
1	Outdoor unit	1
–	Literature package including installation instructions and warranty	1
–	Grommet to secure the outdoor unit (helps with vibration prevention during unit operation)	4
–	Drain Joint	1
–	Drain Hose	1

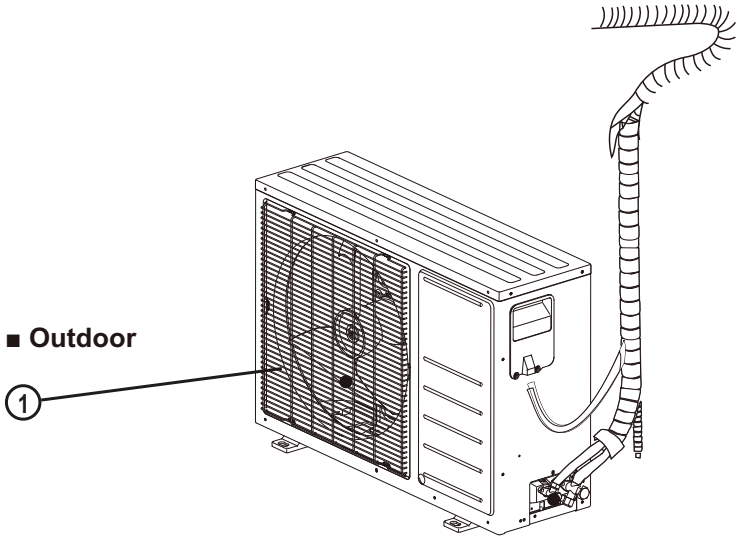

A150766

Fig. 1 – Parts List

NOTE:

- If the outdoor unit is higher than the indoor unit, prevent rain from flowing into the indoor unit along the connection pipe by making a downward arc in the connection pipe before it enters the wall to the indoor unit. This ensures that rain drips from the connection pipe before it enters the wall.
- Piping and the interconnecting wiring are field supplied.
- The illustration above is only a sketch. Different models may be slightly different.

The following units are covered in these installation instructions.

Table 2—Unit Sizes

	SYSTEM TONS	BTUh	VOLTAGE – PHASE	OUTDOOR MODEL
Cooling Only	0.75	9,000	115–1	38MHRC09A––1
	1.00	12,000	115–1	38MHRC12A––1
	0.75	9,000	208/230–1	38MHRC09A––3
	1.00	12,000	208/230–1	38MHRC12A––3
	1.50	18,000	208/230–1	38MHRC18A––3
	2.00	24,000	208/230–1	38MHRC24A––3
Heating Pump	0.75	9,000	115–1	38MHRQ09A––1
	1.00	12,000	115–1	38MHRQ12A––1
	0.75	9,000	208/230–1	38MHRQ09A––3
	1.00	12,000	208/230–1	38MHRQ12A––3
	1.50	18,000	208/230–1	38MHRQ18A––3
	2.00	24,000	208/230–1	38MHRQ24A––3

SYSTEM REQUIREMENTS

Allow sufficient space for airflow and service of the unit. See Fig. 5 for the required minimum distances between the unit, walls or ceilings.

Piping

IMPORTANT: **Both refrigerant lines must be insulated separately.**

- Table 3 contains piping information for the product covered within this document.

Table 3—Piping and Refrigerant Information

	System Size		9K (115V)	12V (115V)	9K (208−230V)	12K (208−230V)	18 (208−230V)	24K (208−230V)
Piping	Min. Piping Length	ft. (m)	10(3)	10(3)	10(3)	10(3)	10(3)	10(3)
	Standard Piping Length	ft. (m)	25(7.5)	25(7.5)	25(7.5)	25(7.5)	25(7.5)	25(7.5)
	Max. outdoor−indoor height difference (OU higher than IU)	ft. (m)	33(10)	33(10)	33(10)	33(10)	33(10)	33(10)
	Max. outdoor−indoor height difference (IU higher than OU)	ft. (m)	33(10)	33(10)	33(10)	33(10)	33(10)	33(10)
	Max. Piping Length with no additional refrigerant charge per System (Standard Piping length)	ft. (m)	25(7.5)	25(7.5)	25(7.5)	25(7.5)	25(7.5)	25(7.5)
	Total Max. Piping Length per system	ft. (m)	82(25)	82(25)	82(25)	82(25)	98(30)	164(50)
	Additional refrigerant charge (between Standard – Max piping length)	Oz/ft (g/m)	0.161(15)	0.161(15)	0.161(15)	0.161(15)	0.161(15)	0.322(30)
	Suction Pipe (size − connection type)	In (mm)	3/8(9.52)	1/2(12.7)	3/8(9.52)	1/2(12.7)	1/2(12.7)	5/8(15.9)
	Liquid Pipe (size − connection type)	In (mm)	1/4(6.35)	1/4(6.35)	1/4(6.35)	1/4(6.35)	1/4(6.35)	3/8(9.52)
	Refrigerant Type	Type	R410A	R410A	R410A	R410A	R410A	R410A
Refrigerant	Cooling Only Models Charge Amount	Lbs (kg)	1.06(0.48)	1.30(0.59)	1.06(0.48)	1.30(0.59)	2.09(0.95)	2.65(1.2)
	Heat Pump Models Charge Amount	Lbs (kg)	1.76(0.8)	2.12(0.96)	1.76(0.8)	2.12(0.96)	3.30(1.5)	3.968(1.8)

All outdoor units have an electronic expansion valve to manage the refrigerant flow of the fan coil connected.

Wiring

All wires must be sized per NEC (National Electrical Code) or CEC (Canadian Electrical Code) and local codes. Use the Electrical Data table MCA (minimum circuit amps) and MOCP (maximum over current protection) to correctly size the wires and the disconnect fuse or breakers respectively.

Per the caution note, only stranded copper conductors with a 600 volt rating and double insulated copper wire must be used. The use of BX cable is not recommended.

Recommended Connection Method for Power and Communication Wiring − Power and Communication Wiring:

The main power is supplied to the outdoor unit. The field supplied 14/3 power/communication wiring from the outdoor unit to the indoor unit consists of four (4) wires and provides the power for the indoor unit. Two wires are high voltage AC power, one is communication wiring and the other is a ground wire.

Recommended Connection Method for Power and Communication Wiring (To minimize communication wiring interference) Power Wiring:

The main power is supplied to the outdoor unit. The field supplied power wiring from the outdoor unit to the indoor unit consists of three (3) wires and provides the power for the indoor unit. Two wires are high voltage AC power and one is a ground wire. To minimize voltage drop, the factory recommended wire size is 14/2 stranded with a ground.

Communication Wiring:

A separate shielded stranded copper conductor only, with a 600 volt rating and double insulated copper wire, must be used as the communication wire from the outdoor unit to the indoor unit. Please use a separate shielded 16GA stranded control wire.

⚠ CAUTION

EQUIPMENT DAMAGE HAZARD

Failure to follow this caution may result in equipment damage or improper operation.

- Wires should be sized based on NEC and local codes.
- Use copper conductors only with a minimum 600 volt rating and double insulated copper wire.

DIMENSIONS – OUTDOOR

Table 4—Dimensions and Weights

	System Size		Height (H) in. (mm)	Width (W) in. (mm)	Depth (D) in. (mm)	Weight–Net lbs. (kg)
Cooling Only	9K	(115)	21.85(555)	30.31(770)	11.81(300)	57.3(26)
	12K	(115V)	21.85(555)	30.31(770)	11.81(300)	57.8(26.2)
	9K	(208/230V)	21.85(555)	30.31(770)	11.81(300)	54.7(24.8)
	12K	(208/230V)	21.85(555)	30.31(770)	11.81(300)	53.8(24.4)
	18K	(208/230V)	21.81(554)	31.50(800)	13.11(333)	70.1(31.8)
	24K	(208/230V)	27.64(702)	33.27(845)	14.29(363)	88.6(40.2)
Heat Pump	System Size		Height (H) in. (mm)	Width (W) in. (mm)	Depth (D) in. (mm)	Weight–Net lbs. (kg)
	9K	(115)	21.85(555)	30.31(770)	11.81(300)	61.5(27.9)
	12K	(115V)	21.85(555)	30.31(770)	11.81(300)	65.0(29.5)
	9K	(208/230V)	21.85(555)	30.31(770)	11.81(300)	57.1(25.9)
	12K	(208/230V)	21.85(555)	30.31(770)	11.81(300)	60.6(27.5)
	18K	(208/230V)	21.81(554)	31.50(800)	13.11(333)	94.6(42.9)
	24K	(208/230V)	27.64(702)	33.27(845)	14.29(363)	105.2(47.7)

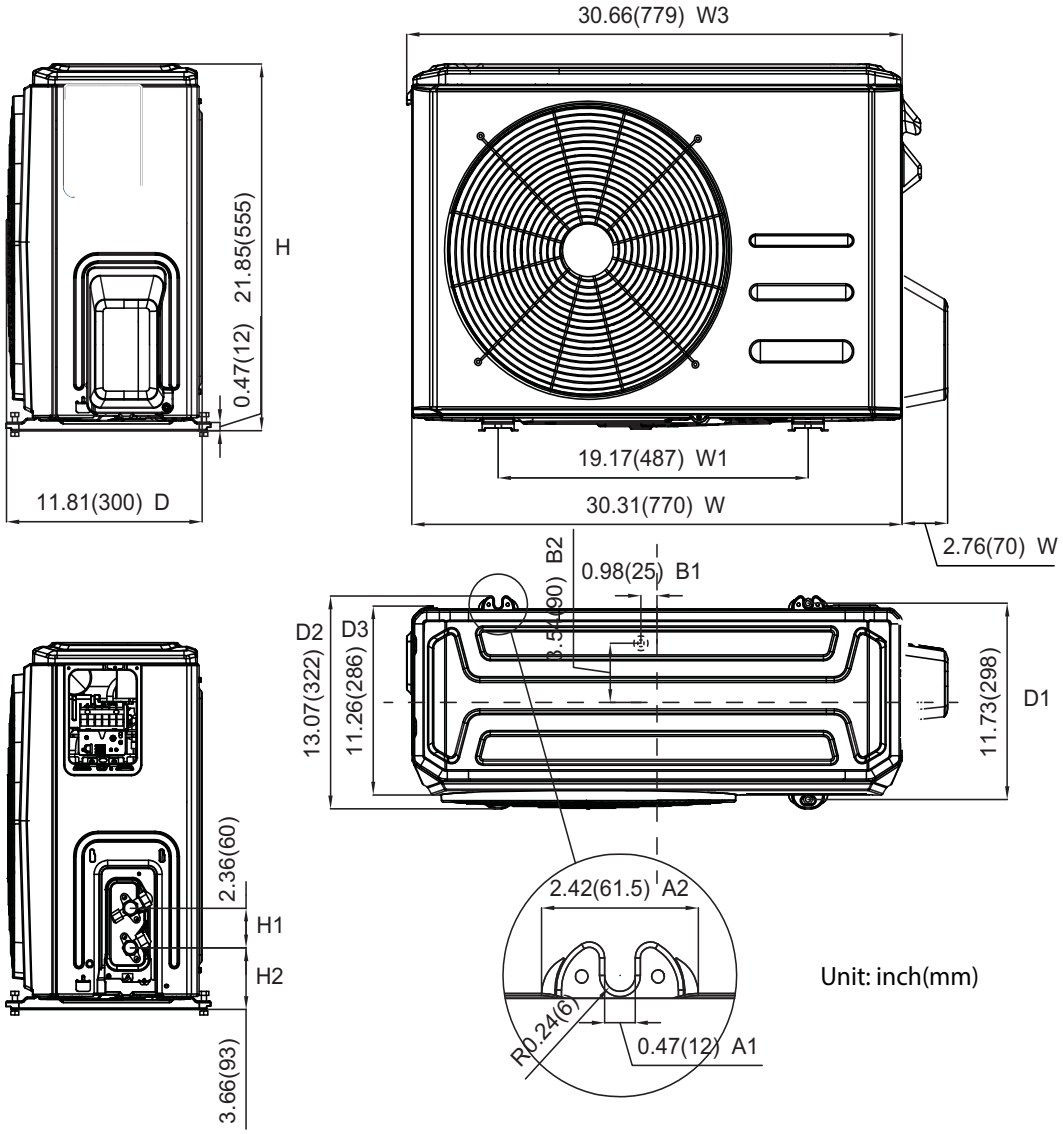

Fig. 2 – Sizes 9K and 12K

DIMENSIONS − OUTDOOR (CONT)

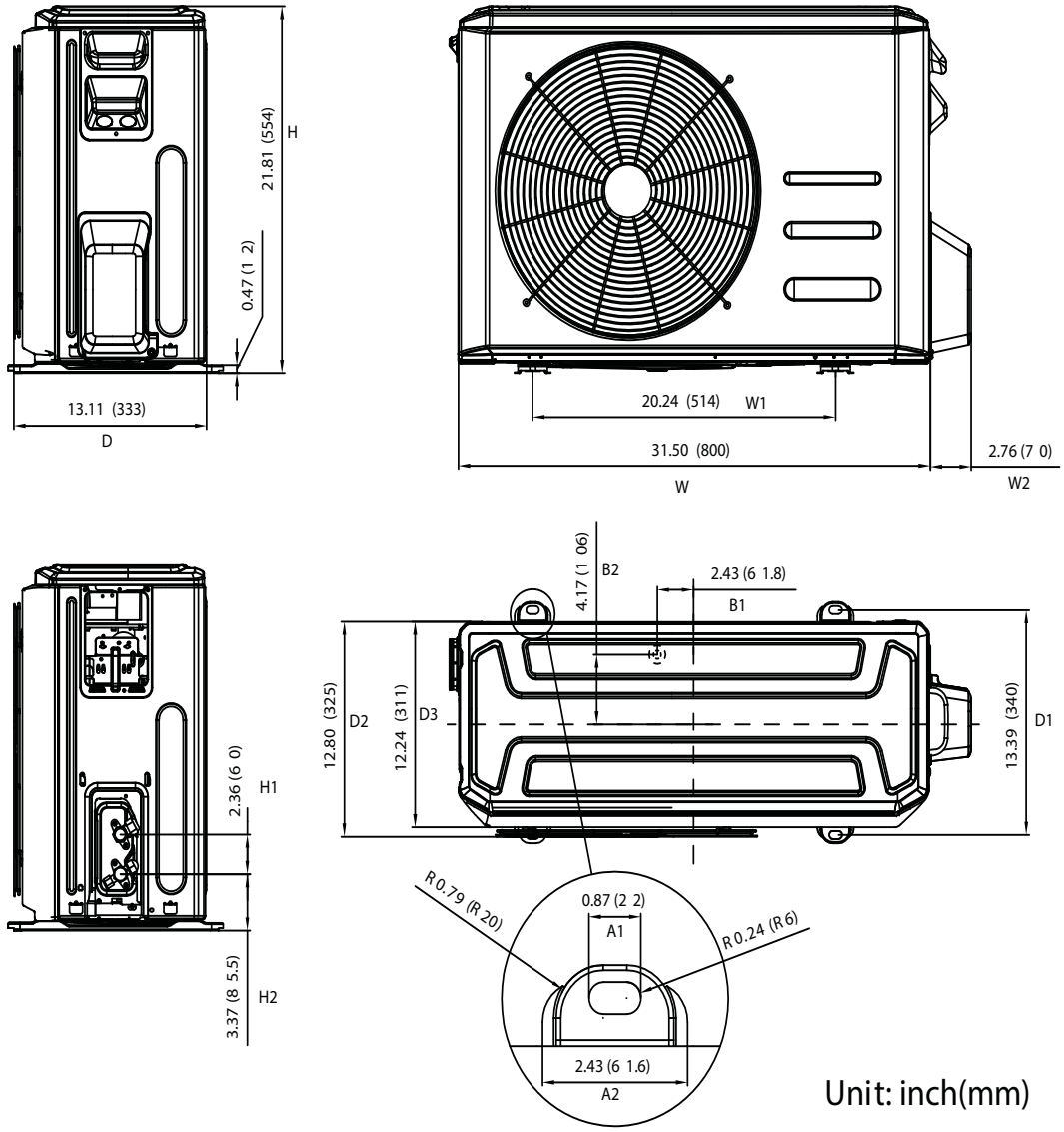

Fig. 3 − Size 18K

DIMENSIONS − OUTDOOR (CONT)

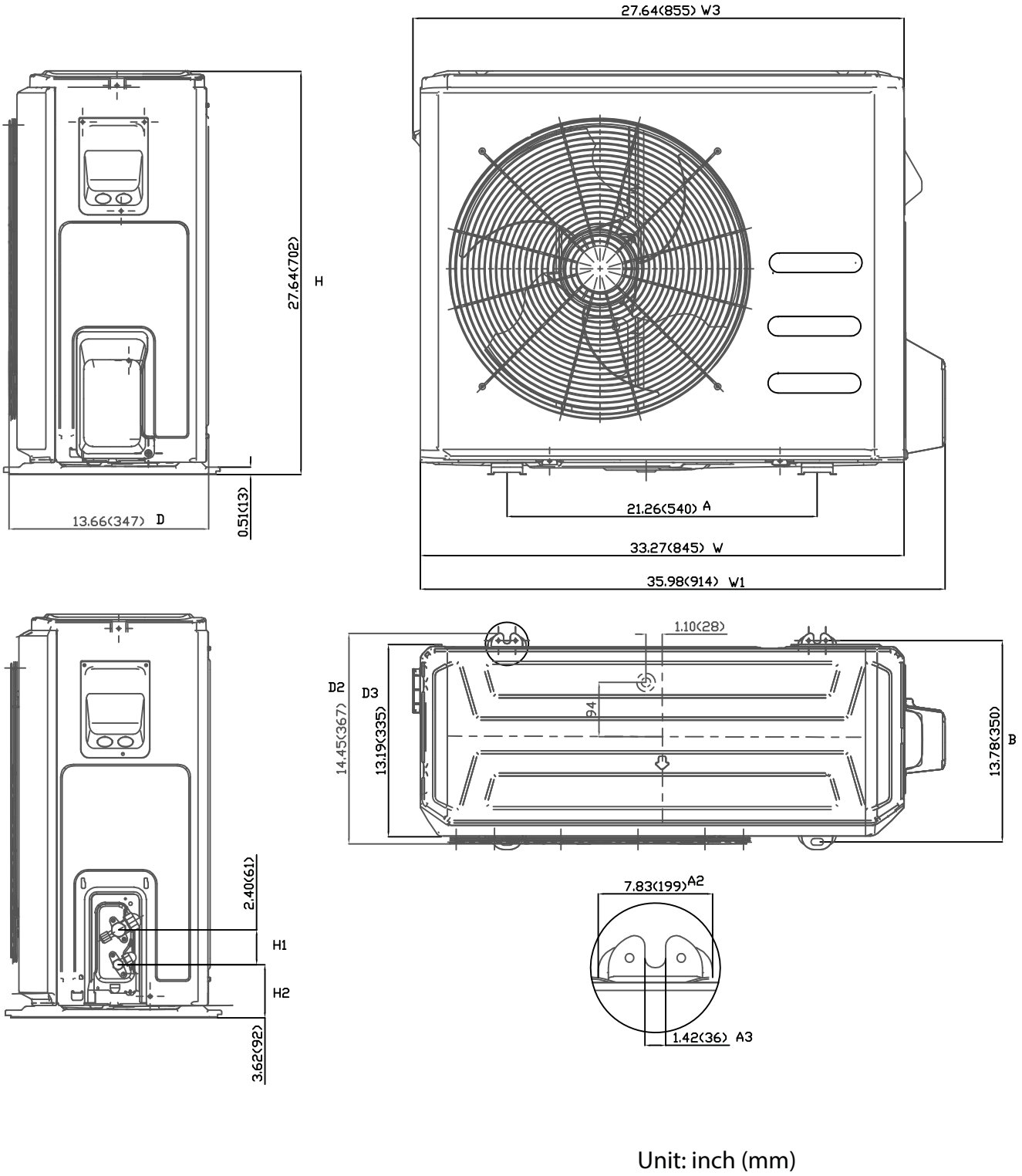

Fig. 4 — Size 24K

CLEARANCES − OUTDOOR

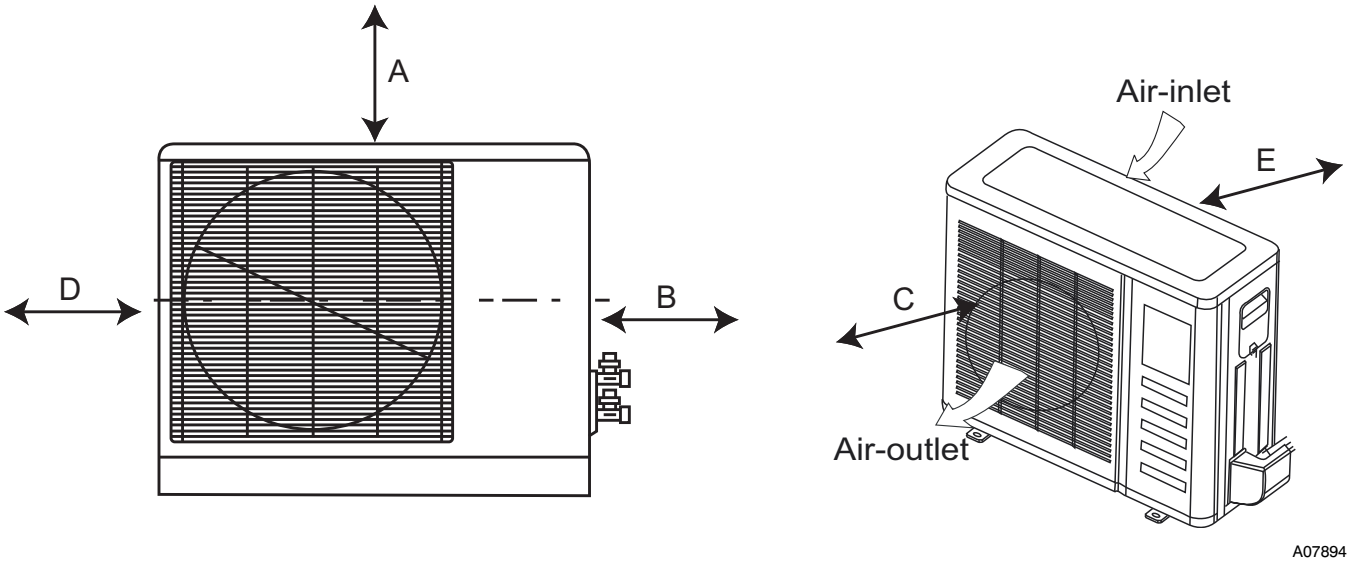

Fig. 5 — Outdoor Unit Clearance

Table 5—Outdoor Unit Clearance Dimensions

UNIT	MINIMUM VALUE in. (mm)
A	24 (610)
B	24 (610)
C	24 (610)
D	4 (101)
E	4 (101)

NOTE: The outdoor unit must be mounted at least 2in. (50mm) above the maximum anticipated snow depth.

INSTALLATION TIPS

Ideal installation locations include:

Outdoor Unit

- A location which is convenient to installation and not exposed to strong winds.
- A location which can bear the weight of the outdoor unit and where the outdoor unit can be mounted in a level position.
- A location which provides appropriate clearances (see Fig. 5).
- Do not install the indoor or outdoor units in a location with special environmental conditions. For those applications, contact your Ductless representative.

OUTDOOR UNIT INSTALLATION

1. Use a rigid base to support the unit in a level position.
2. Locate the outdoor unit and connect piping and wiring.

⚠ CAUTION

EQUIPMENT DAMAGE HAZARD

Failure to follow this caution may result in equipment damage or improper operation.

In regions with snowfall and cold temperatures, avoid installing the outdoor unit in areas where it can be covered by snow. If the outdoor unit is installed in areas where heavy snow is expected, a field supplied ice or snow stand and/or field supplied−installed wind baffle should be installed to protect the unit from snow accumulation and/or blocked air intake. Blocking the air intake may result in reduced airflow, significantly reduced performance and damage to the equipment.

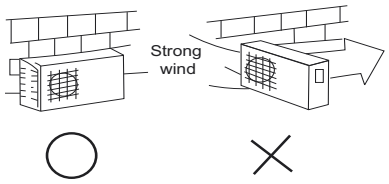

A07350

Fig. 6 — High Wind Installation

MAKE REFRIGERANT PIPING CONNECTIONS (OUTDOOR UNIT)

IMPORTANT: **Use refrigeration grade tubing ONLY. No other type of tubing may be used. Use of other types of tubing will void the manufacturer's warranty.**

Do not open the service valves or remove the protective caps from the tubing ends until all connections are made.

Bend the tubing with bending tools to avoid kinks and flat spots.

Keep the tubing free of dirt, sand, moisture, and other contaminants to avoid damaging the refrigerant system.

Avoid sags in the suction line to prevent the formation of oil traps. Insulate each tube with a minimum 3/8−in. (10 mm) wall thermal pipe insulation. Inserting the tubing into the insulation before making the connections will save time and improve installation quality.

1. Remove the service valve cover, if provided with the unit.
2. Cut the pipe, with a pipe cutter, at 90 degrees (see Fig. 7).
3. Remove the service connection, if provided with the unit.

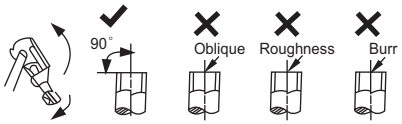

A150767

Fig. 7 — Cut the Pipe

4. Remove all the burrs from the cut cross section of the pipe avoiding any burrs inside the tubes.
5. Remove the flare nuts attached to the indoor and outdoor units.
6. Install the correct size flare nut onto the tubing and make a flare connection. Refer to Table 6 for the flare nut spaces.

Table 6—Flare Nut Spacing

OUTER DIAM. (mm)	A (mm)	
	Max.	Min.
Ø1/4"(6.35)	0.05 (1.3)	0.03(0.7)
Ø3/8"(9.52)	0.06 (1.6)	0.04(1.0)
Ø1/2"(12.7)	0.07 (1.8)	0.04(1.0)
Ø5/8"(15.88)	0.09 (2.2)	0.08(2.0)

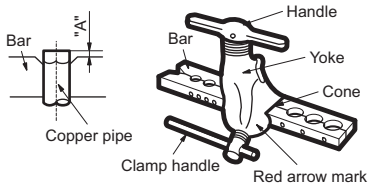

A150768

Fig. 8 — Flare Nut Spacing

7. Apply a small amount of refrigerant oil to the flare connection on the tubing.
8. Align the center of the pipes and/or service valve.

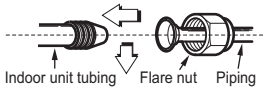

A150769

Fig. 9 — Align Pipe Center

9. Connect both the liquid and gas piping to the indoor unit.
10. Tighten the flare nut using a torque wrench as specified in Table 7.
11. Complete the installation.

Table 7—Tightening Torque

PIPE DIAMETER In.(mm)	TIGHTENING TORQUE	
	Ft—lb	N—m
Ø1/4" (6.35)	10 to 13	13.6 to 17.6
Ø3/8" (9.52)	24 to 31	32.5 to 42.0
Ø1/2" (12.7)	37 to 46	50.1 to 62.3
Ø5/8" (15.88)	50 to 60	67.7 to 81.3

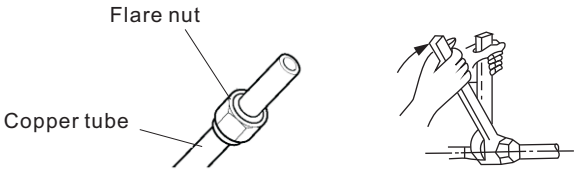

A150770

Fig. 10 — Tighten the Flare Nut

⚠ CAUTION

EQUIPMENT DAMAGE HAZARD

Failure to follow this caution may result in equipment damage or improper operation.

Excessive torque can break the flare nut depending on installation conditions.

INSTALL ALL POWER AND INTERCONNECTING WIRING TO OUTDOOR UNITS

1. Mount the outdoor power disconnect.
2. Run the power wiring from the main box to disconnect per NEC and local codes.
3. Remove the field wiring cover from the unit by loosening the screws.
4. Remove the caps on the conduit panel.
5. Connect the conduit to conduit panel (see Fig. 11).
6. Properly connect both the power supply and control lines to the terminal block per the connection diagram for the appropriate unit capacity and voltage.
7. Ground the unit in accordance with NEC and local electrical codes.
8. Use the lock nuts to secure the conduit.
9. Reinstall the field wiring cover.

⚠ CAUTION

EQUIPMENT DAMAGE HAZARD

Failure to follow this caution may result in equipment damage or improper operation.

- Be sure to comply with local codes while running wire from indoor unit to outdoor unit.
- Every wire must be connected firmly. Loose wiring may cause the terminal to overheat or result in unit malfunction. A fire hazard may also exist. Therefore, ensure all wiring is tightly connected.
- No wire should be allowed to touch the refrigerant tubing, compressor or any moving parts.
- Disconnecting means must be provided and shall be located within sight and readily accessible from the air conditioner.
- Connecting cable with the conduit shall be routed through hole in the conduit panel.

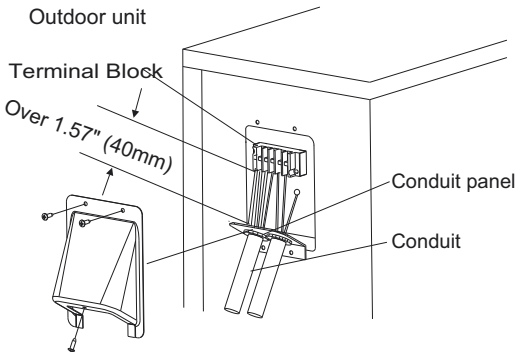

A07455

Fig. 11 — Field Wiring

DRAIN CONNECTIONS

Install drains must meet local sanitation codes.

Install the outdoor unit drain joint

Fit the seal into the drain joint, then insert the drain joint into the base pan hole of the outdoor unit. Rotate 90° to securely assemble them. Connect the drain joint with an extension drain hose to avoid condensate from draining off the outdoor unit during heating mode.

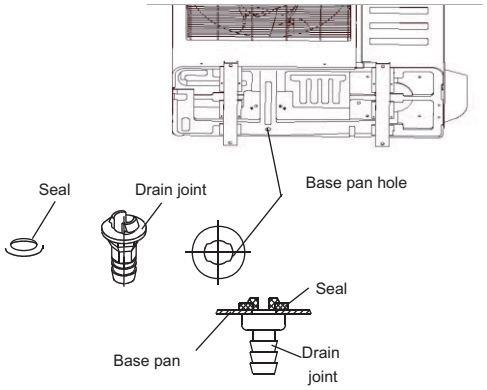

Fig. 12 — Drain Joint

Images are for illustration purposes only.

⚠ CAUTION

In cold climates, ensure the drain hose is as vertical as possible to ensure swift water drainage.

If water drains too slowly, it can freeze in the hose and flood the unit.

ELECTRICAL DATA

Table 8—Electrical Data (Cooling Only)

	Outdoor Unit Size	9K	12K	9K	12K	18K	24K
Cooling Only	**Volts—PH—Hz**	**(115V)**	**(115V)**	**(208/230V)**	**(208/230V)**	**(208/230V)**	**(208/230V)**
	Max – Min* Oper. Voltage	**127—104**	**127—104**	**253—187**	**253—187**	**253—187**	**253—187**
Power Supply	MCA	13	13	7	7	11	16
	MOCP	20	20	15	15	15	25
Compressor	RLA	9	9.5	4.5	4.5	7	11
Outdoor Fan Motor	FLA	0.6	0.6	0.4	0.4	0.5	0.6
	Rated HP	0.054	0.054	0.054	0.054	0.065	0.068
	Output	40	40	40	40	48	45

Table 9—Electrical Data (Heat Pump)

	Outdoor Unit Size	9K	12K	9K	12K	18K	24K
Heat Pump	**Volts—PH—Hz**	**(115V)**	**(115V)**	**(208/230V)**	**(208/230V)**	**(208/230V)**	**(208/230V)**
	Max – Min* Oper. Voltage	**127—104**	**127—104**	**253—187**	**253—187**	**253—187**	**253—187**
Power Supply	MCA	13	13	8	10	15	18
	MOCP	20	20	15	15	20	25
Compressor	RLA	9	9.5	5.5	6.8	10.5	12
Outdoor Fan Motor	FLA	0.7	0.7	0.4	0.4	0.6	0.6
	Rated HP	0.043	0.043	0.043	0.043	0.065	0.085
	Output	32	32	32	32	48	63

*Permissible limits of the voltage range at which the unit will operate satisfactorily.

LEGEND

FLA — Full Load Amps

MCA — Minimum Circuit Amps

MOCP — Maximum Over—Current Protection

RLA — Rated Load Amps

CONNECTION DIAGRAMS

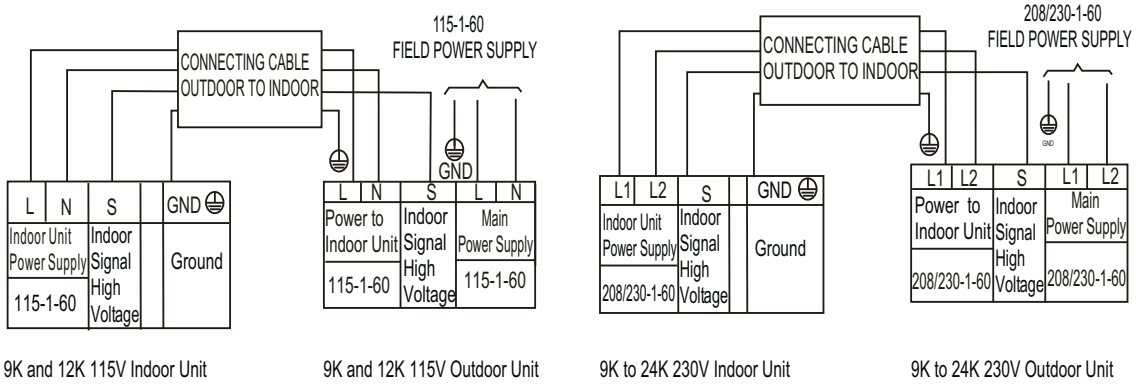

Fig. 13 — Connection Diagrams

Notes:
1. Do not use the thermostat wire for any connection between indoor and outdoor units.
2. All connections between indoor and outdoor units must be as shown. **The connections are sensitive to polarity and will result in a fault code.**

SYSTEM VACUUM AND CHARGE

⚠ CAUTION

UNIT DAMAGE HAZARD

Failure to follow this caution may result in equipment damage or improper operation.

Never use the system compressor as a vacuum pump.

Refrigerant tubes and the indoor coil should be evacuated using the recommended 500 microns deep vacuum method. The alternate triple evacuation method may be used if the procedure outlined below is followed.

NOTE: Always break a vacuum with dry nitrogen.

Using Vacuum Pump

1. Completely tighten flare nuts A, B, C, D, connect the manifold gage charge hose to a charge port of the low side service valve (see Fig. 14).
2. Connect the charge hose to vacuum pump.
3. Fully open the low side of manifold gage (see Fig. 15).
4. Start the vacuum pump.
5. Evacuate using either the deep vacuum or triple evacuation method.
6. After evacuation is complete, fully close the low side of manifold gage and stop the vacuum pump operation.
7. The factory charge contained in the outdoor unit is good for up to 25 ft. (8 m) of line length. For refrigerant lines longer than 25 ft. (8 m), add refrigerant, up to the allowable length, as specified in the System Requirements section.
8. Disconnect the charge hose from the charge connection of the low side service valve.
9. Fully open service valves B and A.
10. Securely tighten the service valve caps.

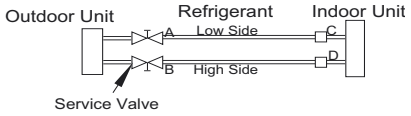

A07360

Fig. 14 — Service Valve

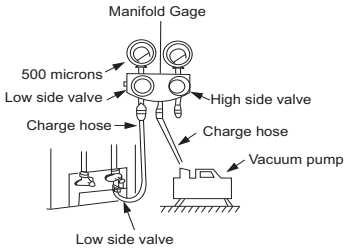

A07361

Fig. 15 — Manifold

Deep Vacuum Method

The deep vacuum method requires a vacuum pump capable of pulling a vacuum of 500 microns and a vacuum gage capable of accurately measuring this vacuum depth. The deep vacuum method is the best way to assure a system is free of air and liquid water (see Fig. 16).

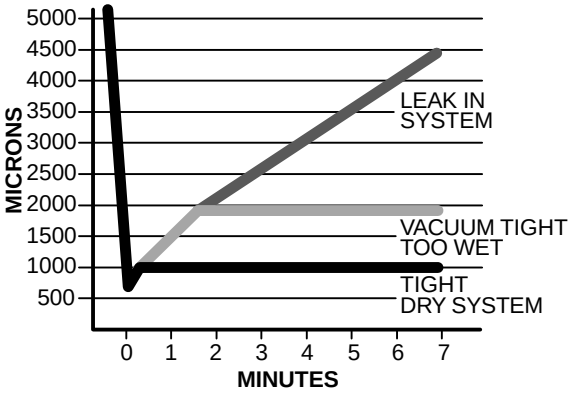

A95424

Fig. 16 — Deep Vacuum Graph

Triple Evacuation Method

The triple evacuation method should only be used when the vacuum pump is only capable of pumping down to 28 in. of mercury vacuum and the system does not contain any liquid water.

Refer to Fig. 17 and proceed as follows:

1. Pump the system down to 28 in. of mercury and allow the pump to continue operating for an additional 15 minutes.
2. Close the service valves and shut off the vacuum pump.
3. Connect a nitrogen cylinder and regulator to the system and open until the system pressure is 2 psig.
4. Close the service valve and allow the system to stand for 1 hr. During this time, dry nitrogen can diffuse throughout the system absorbing moisture.
5. Repeat this procedure as indicated in Fig. 17. The system will then be free of any contaminants and water vapor.

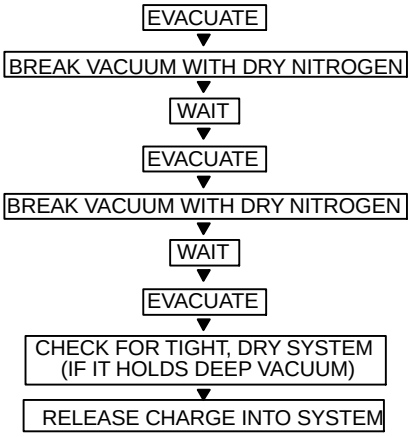

A95425

Fig. 17 — Triple Evacuation Method

Final Tubing Check

IMPORTANT: Check to be certain factory tubing on both the indoor and outdoor unit has not shifted during shipment. Ensure tubes are not rubbing against each other or any sheet metal. Pay close attention to the feeder tubes, making sure wire ties on feeder tubes are secure and tight.

START−UP

Test Operation

Perform a test operation after completing a gas leak and electrical safety check. See the indoor unit installation instructions and owner's manual for additional start up information.

SYSTEM CHECKS

1. Conceal the tubing where possible.
2. Make sure that the drain tube slopes downward along its entire length.
3. Ensure all tubing and connections are properly insulated.
4. Fasten the tubes to the outside wall, when possible.
5. Seal the hole through which the cables and tubing pass.

OUTDOOR UNIT

1. Are there unusual noises or vibrations during operation?

Explain the Following Items to the Customer (with the aid of the Owner's Manual):

1. Explain care and maintenance.
2. Present the installation instructions to the customer.

OUTDOOR UNIT DIAGNOSTIC GUIDES

For ease of service, the systems are equipped with a diagnostic code display LEDs on both the indoor and outdoor units. The outdoor diagnostic is displayed on the outdoor unit microprocessor board.

There may be a few error codes displayed in the indoor unit that might relate to the outdoor unit's problems. If possible, always check the diagnostic codes displayed on the indoor unit first.

The diagnostic codes displayed on the outdoor units are listed on Table 10.

Table 10—Unit Diagnostic Guides

DISPLAY	LED STATUS
E1	Communication malfunction between indoor and outdoor units.
F0	Protection of over−current
F1	Open circuit or short circuit of outdoor ambient temperature sensor T4
F2	Open circuit or short circuit of condenser coil temperature sensor T3
F3	Open circuit or short circuit of Compressor discharge temperature sensor T5
F4	Outdoor unit EEPROM error
F5	Outdoor fan speed has been out of control
P0	IPM malfunction
P1	Over voltage or over low voltage protection
P2	High temperature protection of compressor top
P3	Outdoor low temperature protection
P4	Inverter compressor drive error
P7	Outdoor IGBT temperature sensor error
J0	High temperature protection of indoor coil in heating
J1	Outdoor temperature protection of outdoor coil in cooling
J2	Discharge temperature protection
J3	Protection of active PFC module
J4	Communication error between control board and IPM board
J5	High−pressure switch protection
J6	Low−pressure switch protection
J8	AC voltage protection

For additional diagnostic information, refer to the Service Manual.

Copyright 2016 CAC/BDP. • 7310 W. Morris St. • Indianapolis, IN 46231

Manufacturer reserves the right to change, at any time, specifications and designs without notice and without obligations.