PF5T

Fan Coil, 2-Stage, for R-454B Refrigerant
2 thru 5 Ton

Installation Instructions

NOTE: Read the entire instruction manual before starting the installation.

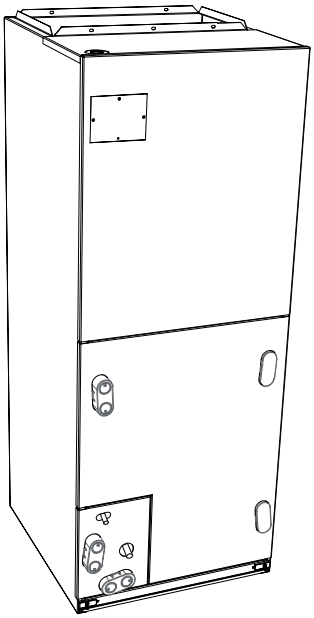

A02332A

Fig. 1 – Typical Unit

Table of Contents

Safety Considerations 1
Introduction. 2
Installation 2
Check Equipment. 2
Mount Fan Coil 2
Upflow Installation 2
Modular Units 4
Horizontal Installations 4
Downflow Installations 6
Manufactured and Mobile Home Housing Applications 6
Air Ducts 6
Electrical Connections 7
Heat Staging Option. 9
Manufactured Housing. 10
Refrigerant Tubing Connection and Evacuation 10
Condensate Drain. 10
Leak Dissipation System 11
Leak Dissipation System Self-Test 12
Troubleshooting 13
Unit Start-Up. 13
Easy Select Configuration Taps. 13
Accessory Installation 15
Fan Coil Sequence of Operation 16
Troubleshooting ECM Motor and Controls. 16
Start-Up Procedures 17
Care and Maintenance 17

Safety Considerations

Improper installation, adjustment, alteration, service, maintenance, or use can cause explosion, fire, electrical shock, or other conditions which may cause death, personal injury or property damage. Consult a qualified installer, service agency, or your distributor or branch for information or assistance. The qualified installer or agency must use factory-authorized kits or accessories when modifying this product. Refer to the individual instructions packaged with the kits or accessories when installing.

Follow all safety codes. Wear safety glasses, protective clothing, and work gloves. Use quenching cloth for brazing operations. Have fire extinguisher available. Read these instructions thoroughly and follow all warning or cautions included in literature and attached to the unit. Consult local building codes and the current editions of the National Electrical Code (NEC) NFPA 70.

In Canada, refer to the current editions of the Canadian Electrical Code CSA C22.1.

Recognize safety information. When you see this symbol ⚠ on the unit and in instructions or manuals, be alert to the potential for personal injury. Understand the signal words DANGER, WARNING, CAUTION, and NOTE. These words are used with the safety-alert symbol. DANGER identifies the most serious hazards which will result in severe personal injury or death. WARNING signifies hazards which could result in personal injury or death. CAUTION is used to identify unsafe practices which may result in minor personal injury or product and property damage. NOTE is used to highlight suggestions which will result in enhanced installation, reliability, or operation.

⚠ WARNING

PROPERTY OR PERSONAL INJURY HAZARD

Risk of fire. Flammable refrigerant used.

To be repaired only by trained service personnel. Do not puncture refrigerant tubing.

Auxiliary devices which may be ignition sources shall not be installed in the ductwork, other than auxiliary devices listed for use with the specific appliance. See instructions.

Dispose of refrigerant properly in accordance with federal or local regulations.

Failure to follow proper R-454B mitigation system installation instructions can result in property damage, personal injury, or death. If any fault codes are listed, please troubleshoot to prevent system malfunction.

⚠ WARNING

PERSONAL INJURY / PROPERTY DAMAGE HAZARD

Failure to follow this warning could result in property damage, personal injury, or death.

For continued performance, reliability, and safety, the only approved accessories and replacement parts are those specified by the equipment manufacturer. The use of non-manufacturer approved parts and accessories could invalidate the equipment limited warranty and result in fire risk, equipment malfunction, and failure. Please review manufacturer's instructions and replacement part catalogs available from your equipment supplier.

⚠ WARNING

ELECTRICAL OPERATION HAZARD

Failure to maintain proper clearances could result in personal injury or death.

Before installing or servicing unit, always turn off all power to unit. There may be more than 1 disconnect switch. Turn off accessory heater power if applicable.

⚠ CAUTION

CUT HAZARD

Failure to follow this caution may result in personal injury.

Sheet metal parts may have sharp edges or burrs. Use care and wear appropriate protective clothing, safety glasses and gloves when handling parts.

⚠ CAUTION

HOT TUBE WARNING

Failure to follow this caution could result in personal injury and/or property damage.

Refrigerant lines can reach or exceed 130 °F (54 °C). Avoid contact with the vapor header or vapor line, especially in Heating Mode. Do not service A2L refrigerant fan coils while these components are hot to avoid risk of ignition source.

Introduction

Model PF5T Fan Coil units are designed for flexibility and can be used for upflow, horizontal, or downflow (kits required on manufactured and mobile home) applications. These units are designed specifically for R-454B refrigerant and must be used only with R-454B refrigerant air conditioners and heat pumps as shipped.

These units leave the factory compliant with low leak requirements of less than 2% cabinet leakage rate at 1.0 inches W.C. and 1.4% cabinet leakage rate at 0.5 inches W.C. when tested in accordance with ASHRAE 193 standard. Because of this, the units need special attention in the condensate pan and drain connection area and when brazing tubing.

These units are available for application in systems of 18,000 through 60,000 Btuh nominal cooling capacities. Factory-authorized, field-installed electric heater packages are available in 5 through 30 kW. See Product Data for available accessory kits.

Installation

Check Equipment

Unpack unit and move to final location. Remove carton taking care not to damage unit.

Inspect equipment for damage prior to installation. File claim with shipping company if shipment is damaged or incomplete. Locate unit rating plate which contains proper installation information. Check rating plate to be sure unit matches job specifications.

NOTE: If the door gasket is damaged or missing, the unit may not meet the ASHRAE 193 standard for cabinet air leakage. See the Product Data for this model or contact your supplier to order the gasket kit.

Mount Fan Coil

Unit can stand or lie on floor, or hang from ceiling or wall. Allow space for wiring, piping, and servicing unit.

IMPORTANT: When unit is installed over a finished ceiling and/or living area, building codes may require a field-supplied secondary condensate pan to be installed under the entire unit. Some localities may allow the alternative of running a separate, secondary condensate line. Consult local codes for additional restrictions or precautions.

NOTE: Nuisance sweating may occur if the unit is installed in a high humidity environment with low airflow.

PF5T Fan Coils can be installed for upflow and horizontal-left applications as factory shipped. Units can be installed for horizontal-right applications with field modifications. Units may be converted for downflow applications using factory-authorized accessory kits.

NOTE: To ensure proper drainage for horizontal installations, unit must be installed so it is within 1/8 in. (3.2mm) level of the length and width of unit.

Upflow Installation

If return air is to be ducted, install duct flush with floor. Set unit on floor over opening. Only use return-air opening provided. All return air must pass through the coil (Fig. 2).

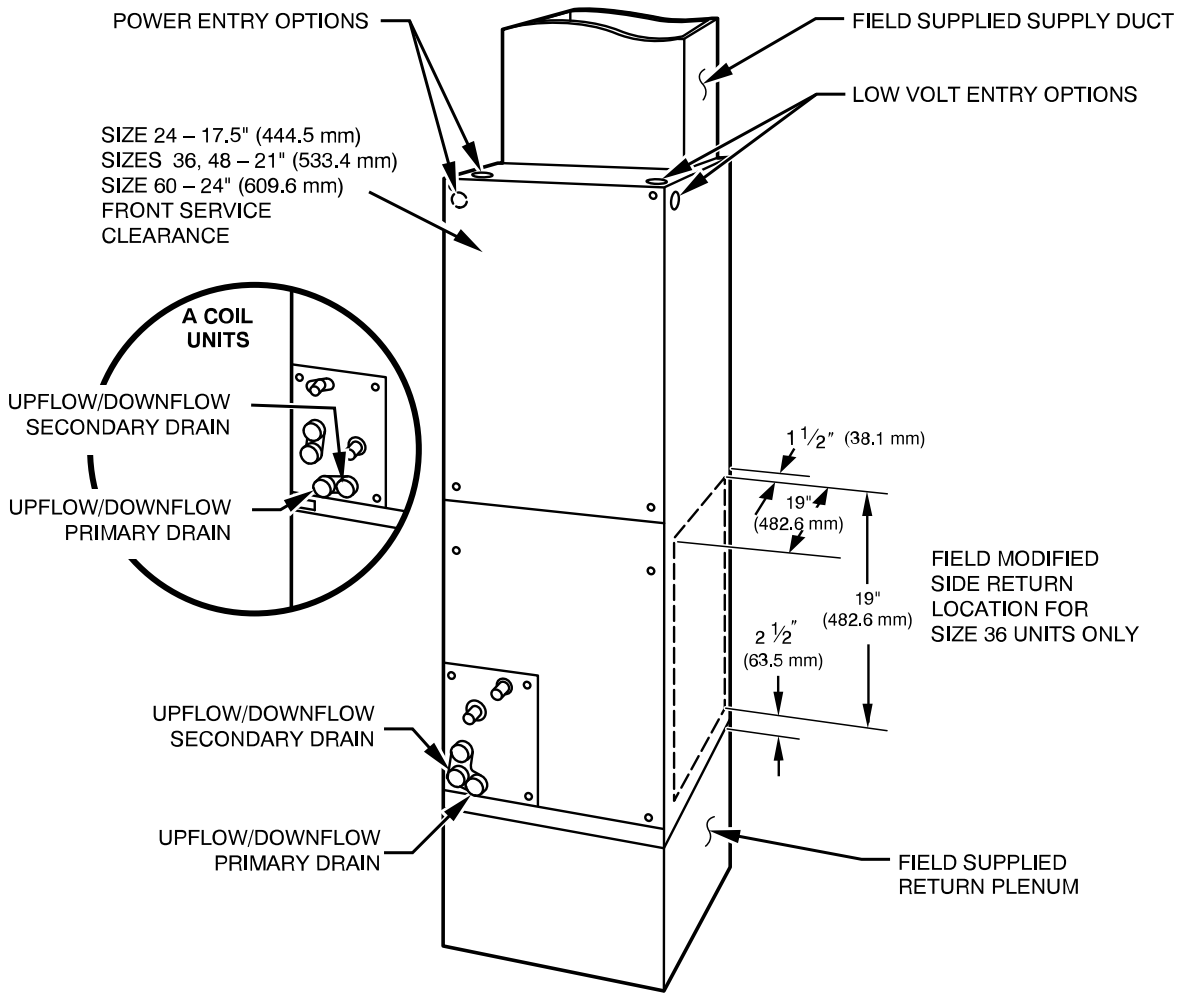

A07139A

Fig. 2 – Slope Coil Unit in Upflow Application

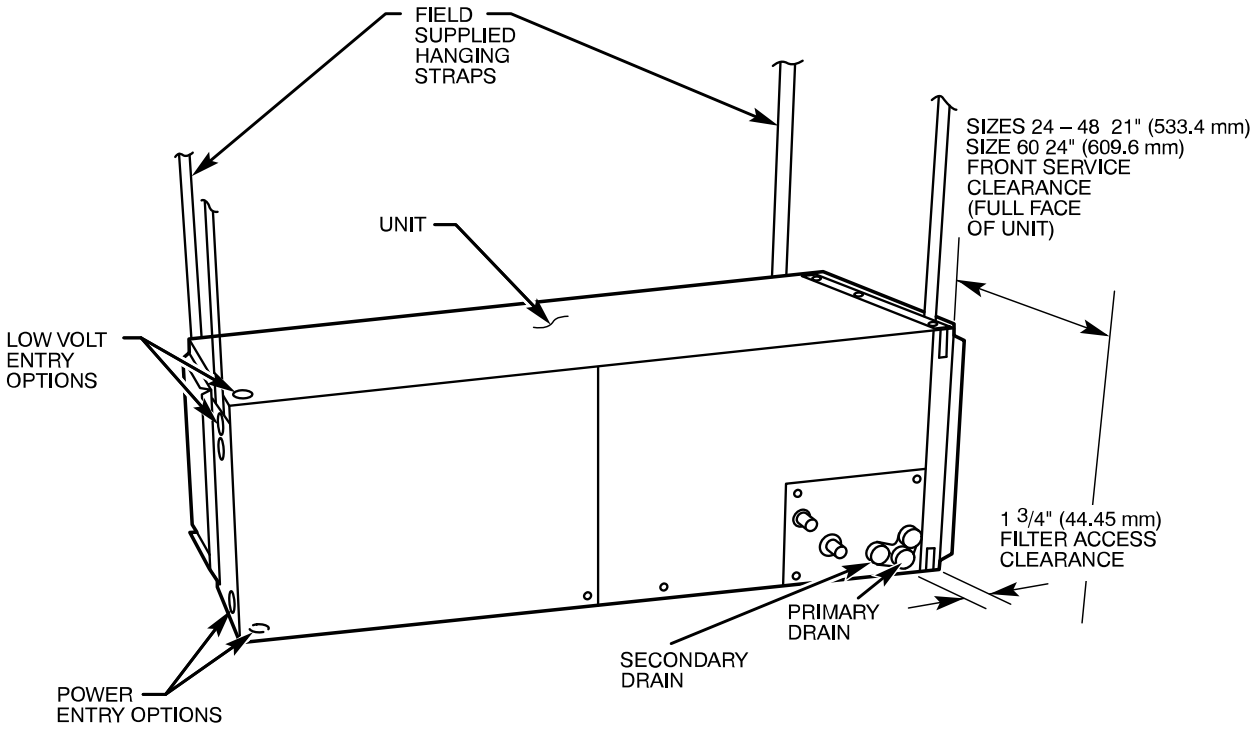

A07140B

Fig. 3 – Slope Coil in Horizontal-Left Application (Factory Ready)

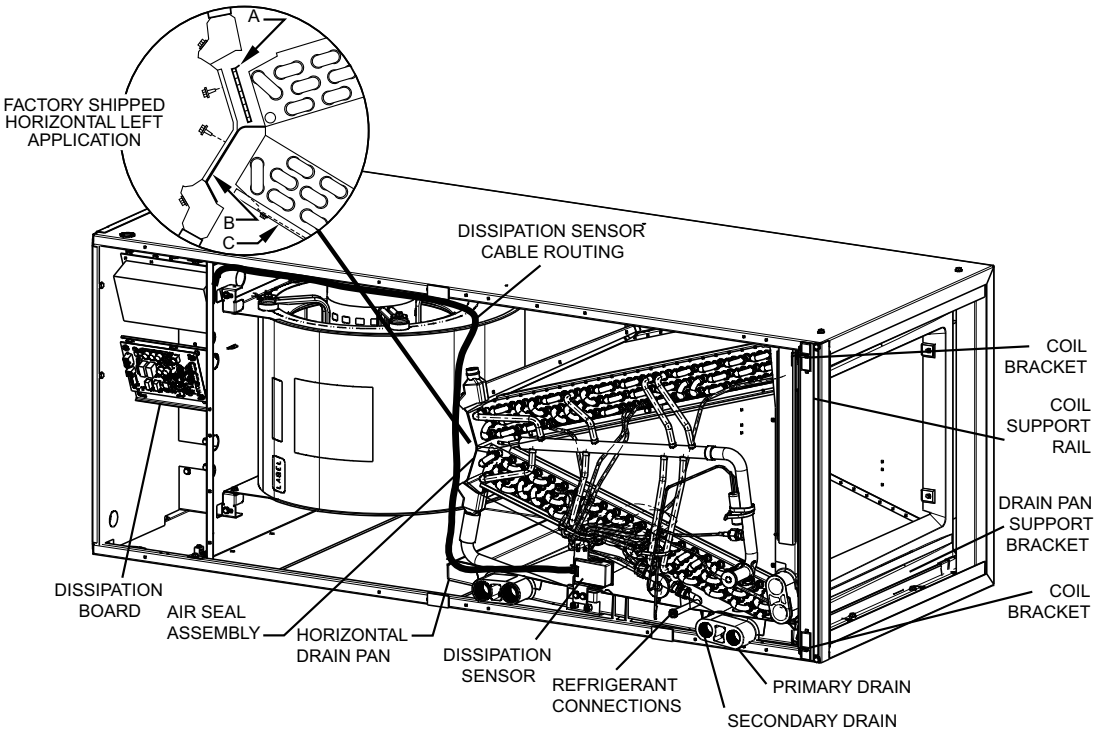

A240079

Fig. 4 – A-Coil in Horizontal-Left Application (Factory Ready)

Modular Units

Some sizes of the Fan Coils are available in 2-piece modular construction. Modular construction allows installer to disassemble unit into 2 components, coil box and blower box, for ease of installation (refer to Product Data Sheet, and Fig. 5.

To disassemble unit, remove rear corner brackets by removing 2 screws which secure brackets. Remove either 2 screws in each front corner of coil box, or 2 screws in blower box. Do not remove all 4 screws in each corner. Sections may now be separated by lifting top section from lower section.

To reassemble, reverse above procedure. Be certain to reinstall all fasteners when reassembling.

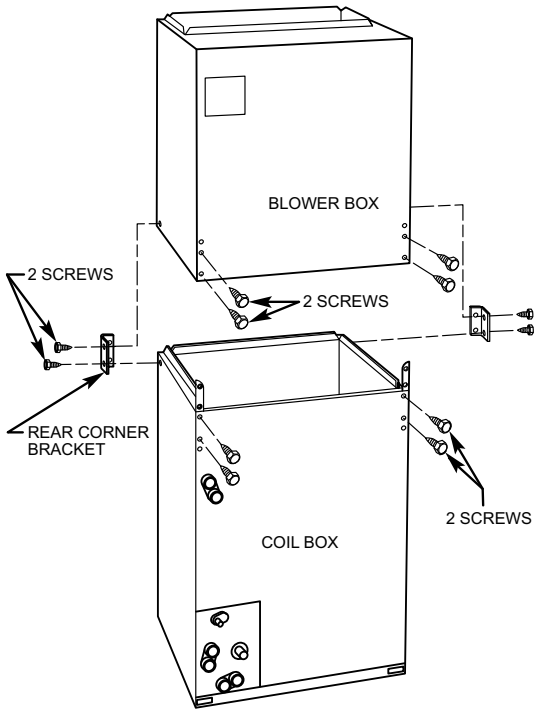

A95293

Fig. 5 – Modular Unit Assembly

Horizontal Installations

Be sure installation complies with all applicable building codes that may require installation of a secondary condensate pan.

1. Arrange support for unit by setting it in or above secondary condensate pan.
2. When suspending unit from ceiling dimples in casing indicate proper location of screws for mounting metal support straps (Fig. 4).

Horizontal-Right Conversion of Units with Slope Coils

⚠ CAUTION

PROPERTY DAMAGE HAZARD

Failure to follow this caution may result in property damage.

A gasket kit is required for horizontal slope coil conversion to maintain low air leak/low sweat performance. See Product Data or contact your supplier for the kit number.

1. Remove blower and coil access panels and fitting panel (Fig. 6).
2. Disconnect sensor on drain pan and cut wire tie securing sensor harness to the coil.
3. Undo sensor wire routing and place entire harness in the control box.
4. Remove coil mounting screw securing coil assembly to right side casing flange.
5. Remove coil assembly.
6. Lay fan coil on its right side and reinstall coil assembly with condensate pan down (Fig. 6).
7. Attach coil to casing flange using previously removed coil mounting screw.
8. Reconnect sensor wire harness by following routing shown (Fig. 6).

IMPORTANT: Sensor must be installed with the connector facing down or facing horizontally. Sensor should never be positioned with connector facing upward. Incorrect sensor position could result in premature failure.

9. Make sure pan cap in fitting door is properly seated on fitting door to retain low air leak rating of the unit.
10. Add gaskets from kit per kit instructions. See Product Data for kit number.
11. Align holes with tubing connections and condensate pan connections. Reinstall access panels and fitting panel.
12. Make sure liquid and suction tube grommets are in place to prevent air leaks and cabinet sweating. Install grommets after brazing.

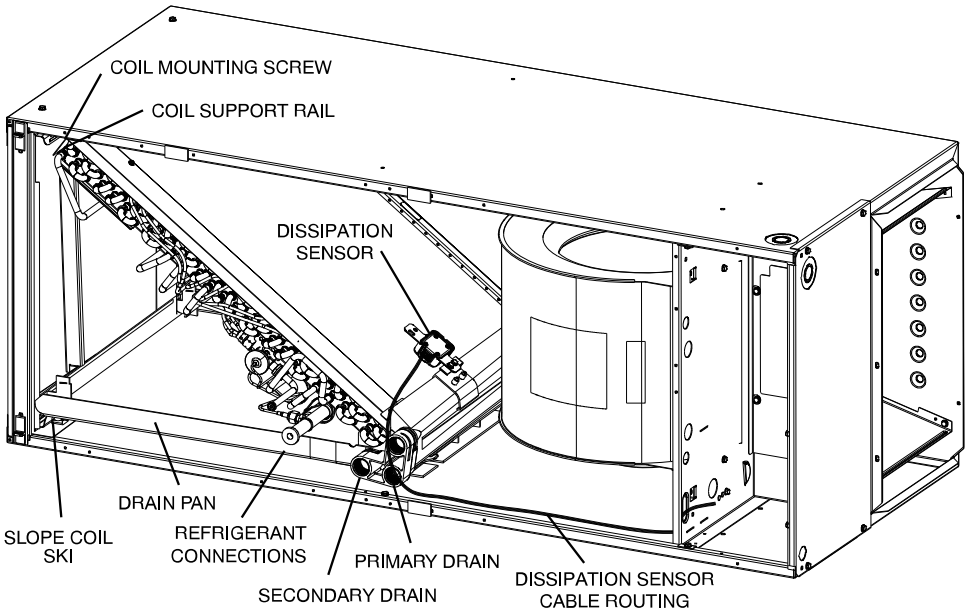

A230499

Fig. 6 – Slope Coil in Horizontal-Right Application

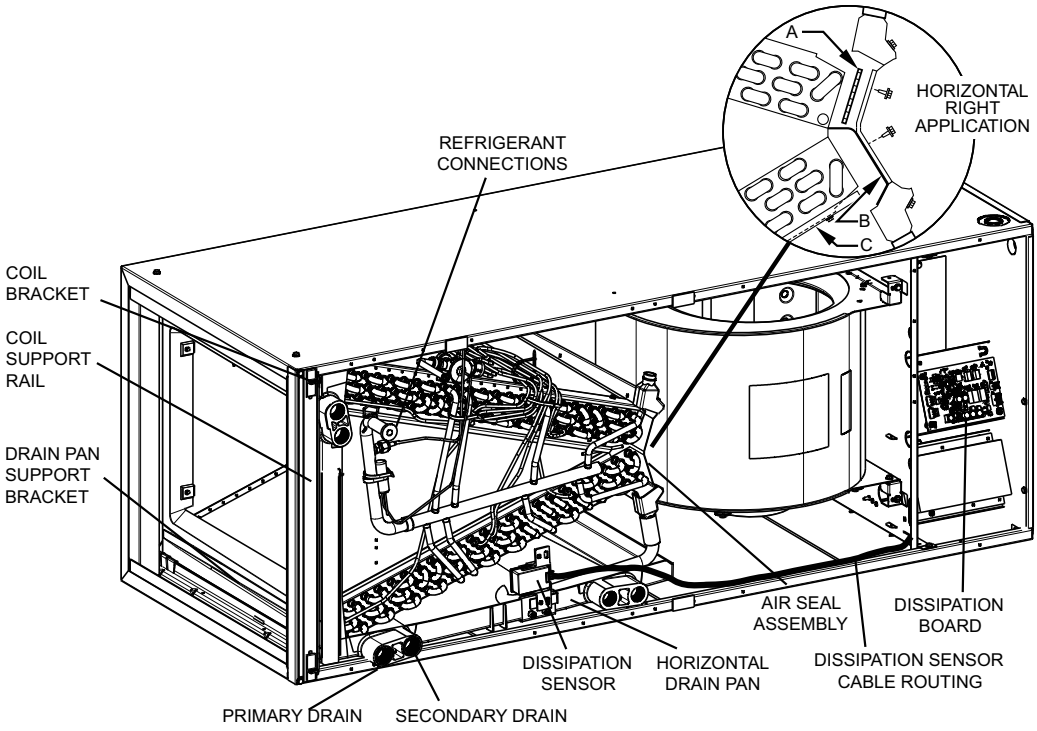

A240080

Fig. 7 – A-Coil in Horizontal-Right Application

Horizontal Right Conversion of Units With A-Coil

1. Remove blower and coil access panels (Fig. 7).
2. Disconnect and remove sensor on delta plate and install on horizontal drain pan clip (Fig. 17).

IMPORTANT: Sensor must be installed with the connector facing down or facing horizontally. Sensor should never be positioned with connector facing upward. Incorrect sensor position could result in premature failure.

3. Undo sensor wire harness routing and place entire harness in the control box.
4. Remove metal clip securing fitting panel to condensate pan. Remove fitting panel.
5. Remove 2 snap-in clips securing A-coil in unit.
6. Slide coil and pan assembly out of unit.
7. Remove horizontal drain pan support bracket from coil support rail on left side of unit and reinstall on coil support rail on right side of unit.

8. Convert air seal assembly for horizontal right.
   a. Remove air seal assembly from coil by removing 4 screws (Fig. 18).
   b. Remove air splitter (B) from coil seal assembly by removing 3 screws (Fig. 7 inset).
   c. Remove filler plate (A) and install air splitter (B) in place of filler plate.
   d. Install filler plate (A) as shown in horizontal right application.
   e. Remove condensate troughs (C) and install on opposite tube sheets.
   f. Install hose onto plastic spout.
9. Install horizontal pan on right side of coil assembly.
10. Slide coil assembly into casing. Be sure coil bracket on each corner of vertical pan engages coil support rails.
11. Reinstall 2 snap-in clips to correctly position and secure coil assembly in unit. Be sure clip with large offsets is used on right side of unit to secure horizontal pan.
12. Reconnect the sensor wire harness by following the routing shown in Fig. 7.
13. Remove two oval fitting caps from left side of the coil, access panel, and fitting panel.
14. Remove insulation knockouts on right side of coil access panel.
15. Remove 2 oval coil access panel plugs and reinstall into holes on left side of coil access panel and fitting panel.
16. Install condensate pan fitting caps (from Step 13.) in right side of coil door making sure that cap snaps and seats cleanly on back side of the coil door. Make sure no insulation interferes with seating of cap.
17. Reinstall access and fitting panels, aligning holes with tubing connections and condensate pan connections. Be sure to reinstall metal clip between fitting panel and vertical condensate pan.
18. Make sure liquid and suction tube grommets are in place to prevent air leaks and cabinet sweating.

Downflow Installations

⚠ CAUTION

UNIT OR PROPERTY DAMAGE HAZARD

Failure to follow this caution may result in product or property damage.

The conversion of the fan coil to downflow requires special procedures for the condensate drains on both A-coil and slope units. The vertical drains have an overflow hole between the primary and secondary drain holes. This hole is plugged for all applications except downflow, but must be used for downflow. During the conversion process, remove the plastic cap covering the vertical drains only and discard. Remove the plug from the overflow hole and discard. At completion of the downflow installation, caulk around the vertical pan fitting to door joint to retain the low air leak performance of the unit.

In this application, field conversion of the evaporator is required using accessory downflow kit along with an accessory base kit. Use fireproof resilient gasket, 1/8- to 1/4-in. (3.2 to 6.4mm) thick, between duct, unit, and floor.

NOTE: To convert units for downflow applications, refer to Installation Instructions supplied with kit for proper installation. See the Product Data or contact your supplier for the kit number. Use fireproof resilient gasket, 1/8- to 1/4-in. (3.2 to 6.4mm) thick, between duct, unit, and floor.

⚠ CAUTION

PROPERTY DAMAGE HAZARD

Failure to follow this caution may result in property damage.

A gasket kit is required for horizontal slope coil conversion to maintain low air leak/low sweat performance. See Product Data or contact your supplier for the kit number.

Manufactured and Mobile Home Housing Applications

1. Fan coil unit must be secured to the structure using field-supplied hardware.
2. Allow a minimum of 24" (610 mm) clearance from access panels.
3. Recommended method of securing for typical applications
   a. If fan coil is away from wall, attach pipe strap to top of fan coil using No. 10 self tapping screws. Angle strap down and away from back of fan coil, remove all slack, and fasten to wall stud of structure using 5/16-in. (8mm) diameter lag screws. Typical both sides of fan coil.
   b. If fan coil is against wall, secure fan coil to wall stud using 1/8-in. (3mm) thick right-angle brackets. Attach brackets to fan coil using No. 10 self tapping screws and to wall stud using 5/16-in. (8mm) diameter lag screws (Fig. 7).

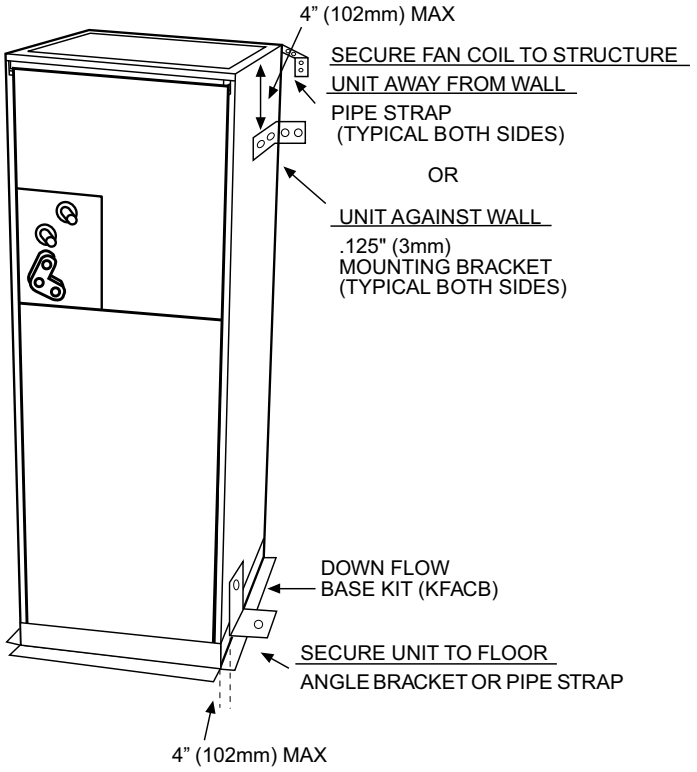

Fig. 8 – A-Coil

Air Ducts

Connect supply-air duct over outside of 3/4-in. (19mm) flange provided on supply-air opening. Secure duct to flange with proper fasteners for type of duct used, and seal duct-to-unit joint.

Duct connection flanges are provided on unit air discharge connection. When using Fan Coil units with 20-, 24-, and 30-kW electric heaters, maintain a 1-in. (25mm) clearance from combustible materials to discharge plenum and ductwork for a distance of 36 in. (914mm) from unit. Use accessory downflow base to maintain proper clearance on downflow installations.

Use flexible connectors between ductwork and unit to prevent transmission of vibration. When electric heater is installed, use heat resistant material for flexible connector between ductwork and unit at discharge connection. Ductwork passing through unconditioned space must be insulated and covered with vapor barrier.

⚠ WARNING

EXPLOSION AND PERSONAL HEALTH HAZARD

Failure to follow this warning could result in personal injury, death, and/or unit damage.

Ensure to keep any required ventilation openings clear of obstruction.

Air ducts connected to the appliance shall not contain a POTENTIAL IGNITION SOURCE.

Auxiliary devices which may be a POTENTIAL IGNITION SOURCE shall not be installed in the duct work. Examples of such POTENTIAL IGNITION SOURCES are hot surfaces with a temperature exceeding 1292°F (700°C) and electric switching devices. Ensure only manufacturer approved auxiliary devices are installed.

Ductwork Acoustical Treatment

Metal duct systems that do not have a 90° elbow and 10 ft (3m) of main duct to first branch takeoff may require internal acoustical insulation lining.

As an alternative, fibrous ductwork may be used if constructed and installed in accordance with the latest edition of SMACNA construction standard on fibrous glass ducts. Both acoustical lining and fibrous ductwork shall comply with National Fire Protection Association Standards 90A or B as tested by UL Standard 181 for Class 1 air ducts.

Electrical Connections

On units with a factory installed disconnect with pull-out removed, service and maintenance can be safely performed on only the load side of the control package.

⚠ WARNING

ELECTRICAL SHOCK HAZARD

Failure to follow this warning could result in personal injury or death.

Field wires on the line side of the disconnect found in the fan coil unit remain live, even when the pull-out is removed. Service and maintenance to incoming wiring cannot be performed until the main disconnect switch (remote to the unit) is turned off.

⚠ CAUTION

Units may contain plastic plugs for the high and low voltage electrical connections. These plugs should only be removed when these ports are used for install or servicing and should be discarded after removal.

Line-Voltage Connections

To pair an electric heater with the fan coil, remove and discard power plug from fan coil and connect the heater plug to the plug from unit wiring harness. (See Electric Heater Installation Instructions.)

For units without electric heat:

1. Connect 208/230V power leads from field disconnect to yellow and black stripped leads.
2. Connect ground wire to unit ground lug.

Check all factory wiring per unit wiring diagram and inspect factory wiring connections to be sure none were loosened in transit or installation.

⚠ WARNING

ELECTRICAL SHOCK HAZARD

Failure to follow this warning could result in personal injury or death.

Before installing or servicing system, always turn off main power to system. There may be more than one disconnect switch. Tag disconnect switch with a suitable warning label. Turn off accessory heater power if applicable.

⚠ CAUTION

PROPERTY DAMAGE HAZARD

Failure to follow this caution may result in product or property damage.

If a disconnect switch is to be mounted on unit, select a location where drill or fastener will not contact electrical or refrigerant components.

NOTE: Before proceeding with electrical connections, make certain that supply voltage, frequency, and phase are as specified on unit rating plate.

Be sure that electrical service provided by the utility is sufficient to handle the additional load imposed by this equipment. See unit wiring label for proper field high- and low-voltage wiring. Make all electrical connections in accordance with NEC and any local codes or ordinances that may apply. Use copper wire only. The unit must have a separate branch electric circuit with a field-supplied disconnect switch located within sight from, and readily accessible from the unit.

24V Control System Connections to Unit Printed Circuit Board (PCB)

Refer to unit wiring instructions for recommended wiring procedures. Use No. 18 AWG color-coded, insulated (35°C minimum) wires to make low-voltage connections between thermostat and unit. If thermostat is located more than 100 ft (30m) from unit (as measured along the low-voltage wires), use No. 16 AWG color-coded, insulated (35°C minimum) wires. PCB is circuited for single-stage heater operation. When additional heater staging is desired as applicable, remove Jumper J2 on PCB to enable staging.

Connect low-voltage leads to thermostat and outdoor unit (Fig. 9 thru Fig. 12).

Easy Select Board Jumpers

J1 – This jumper must be pulled to activate dehumidification mode. The jumper connects R to DH. With the jumper in, the DH terminal is always energized. With the jumper pulled, the DH terminal is de-energized. A control such as the thermidistat must be used to supply the 24V signal when there is no call for dehumidification, and turn off the 24V when there is a call for dehumidification.

J2 – This jumper activates heat staging. The jumper connects the W1 and W2 terminals together. If either is energized, W2 airflow is delivered. With the jumper pulled, there are separate airflows for W1 and W2.

J4 – This jumper is for OD pairing flexibility and should be field installed. Connect Y1 to Y/Y2 when pairing the fan coil with the single-stage outdoor unit.

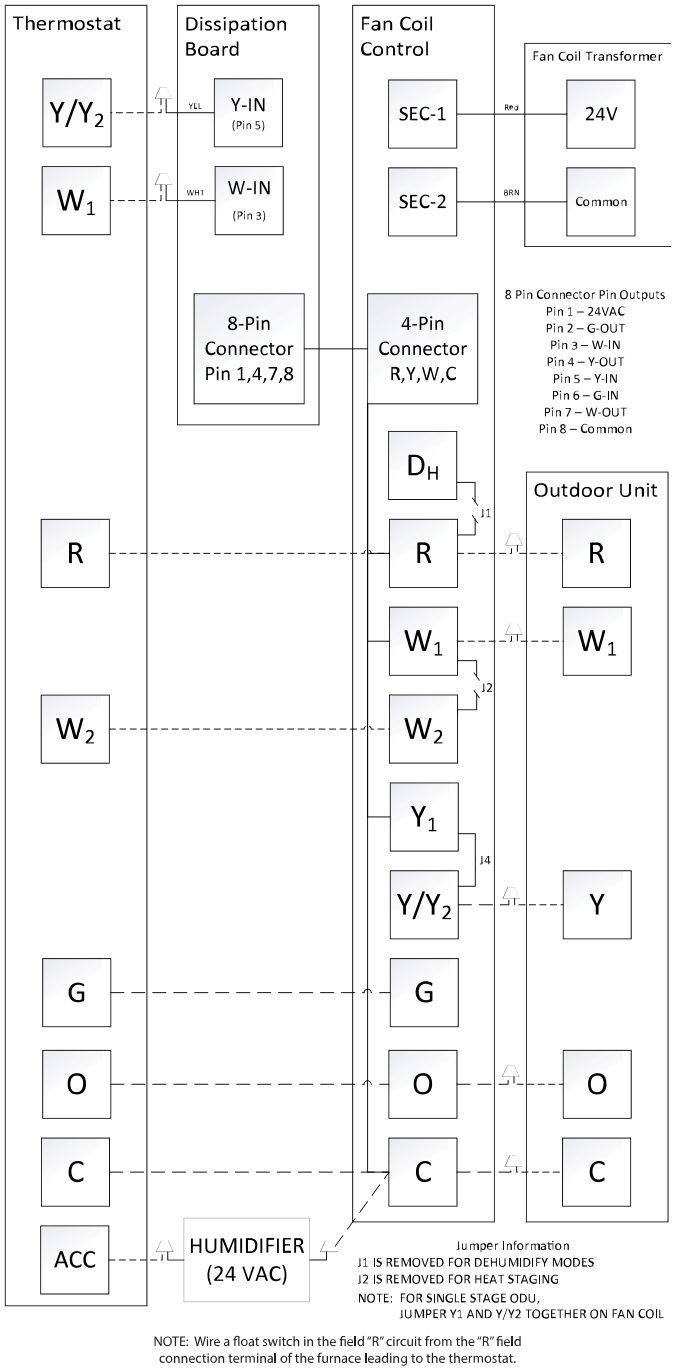

Fig. 9 – Fan Coil Wiring with Single-Stage Heat Pump A240476BICP

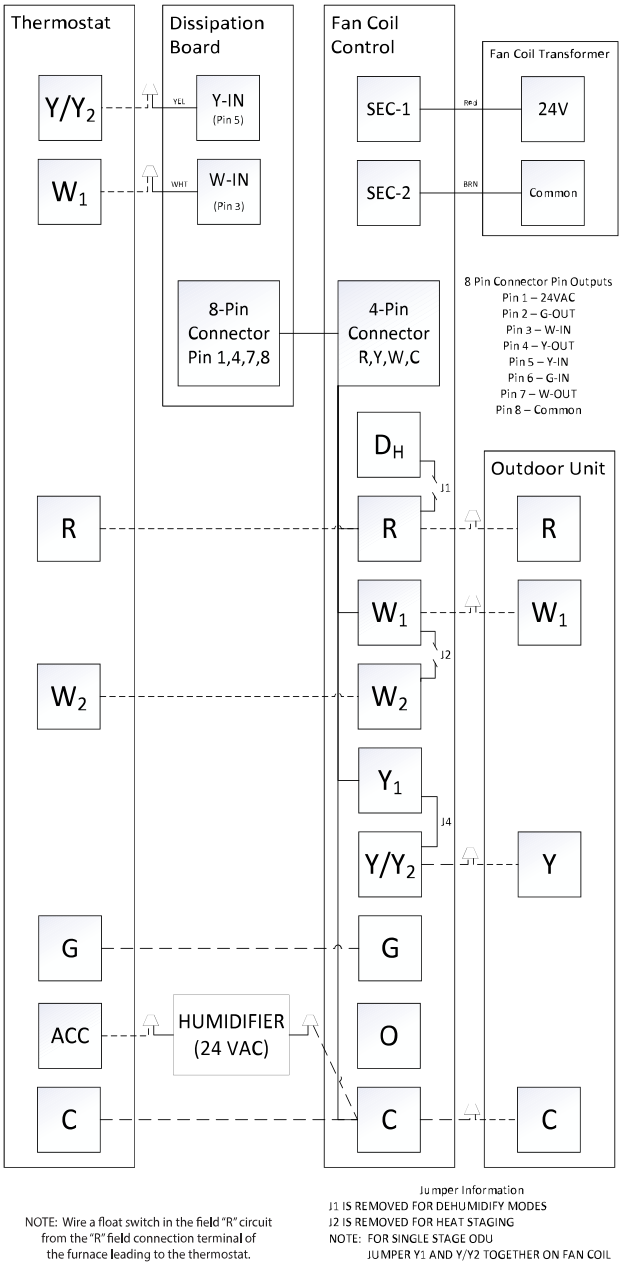

Fig. 10 – Fan Coil Wiring with Single-Stage Air Conditioner A240477BICP

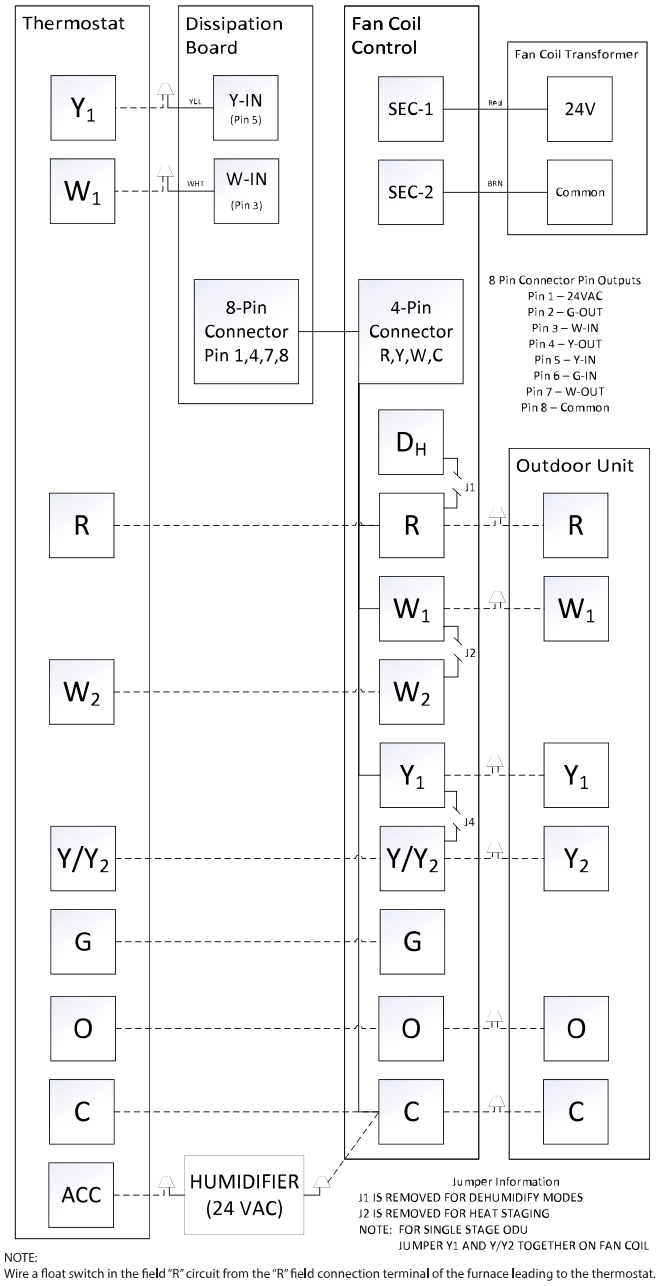

A240478AICP

Fig. 11 – Fan Coil Wiring with Two-Stage Heat Pump

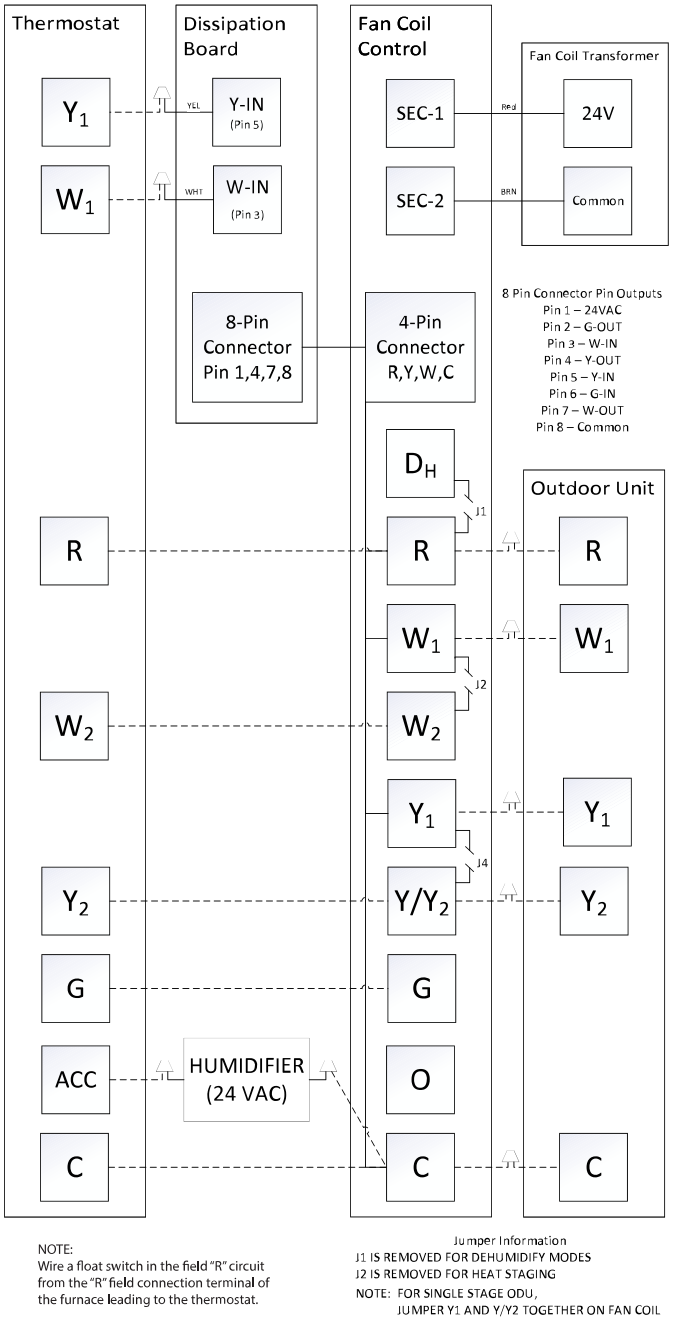

A240479BICP

Fig. 12 – Fan Coil Wiring with Two-Stage Air Conditioner

Heat Staging Option

Heat staging of the electric heat package is possible when the Fan Coil is installed as a part of a single speed heat pump system using a corporate 2-speed thermostat or capable zoning control and any one of the following electric heat packages:

Relay Heaters

KFFEH2901N09	**KFFEH3001F15**	**KFFEH3101C15**
KFFEH3201F20	**KFFEH3301C20**	

Complete system low-voltage wiring as shown in Fig. 9 thru Fig. 12.

NOTE: Where local codes require thermostat wiring be routed through conduit or raceways, splices can be made inside the fan coil unit. All wiring must be NEC Class l and must be separated from incoming power leads.

A factory authorized disconnect kit is available for installation of all single phase 3kW – 10kW heaters. When electric heat packages with circuit breakers are installed, the circuit breaker can be used as a disconnect. The factory installed location for the dissipation board interferes with the 24kW, and 30kW heaters. To account for this, an enclosure is included with the heater kit. Follow all Electric Heat Instructions on how to move the dissipation board into the enclosure on the outside of the unit.. Transformer is factory wired for 230V operation. For 208V applications, disconnect black wire from 230V terminal on transformer and connect it to 208V terminal (Fig. 13).

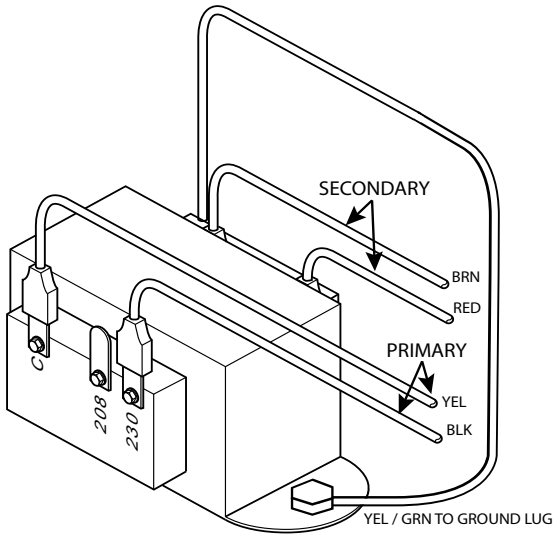

A05182A

Fig. 13 – Transformer Connections

The secondary circuit of transformer is protected by a 5-amp fuse mounted on printed-circuit board.

Manufactured Housing

In manufactured housing applications, the Code of Federal Regulations, Title 24, Chapter XX, Part 3280.714 requires that supplemental electric heat be locked out at outdoor temperatures above 40°F (4°C) except for a heat pump defrost cycle. A corporate thermostat in conjunction with an outdoor sensor can be used to lock out supplemental heat above 40°F (4°C). Refer to thermostat instructions for details. If a non-corporate thermostat is used, an outdoor thermostat may be required.

Ground Connections

⚠ WARNING

ELECTRICAL SHOCK HAZARD

Failure to follow this warning could result in personal injury or death.

According to NEC, NFPA 70, and local codes, the cabinet must have an uninterrupted or unbroken ground to minimize personal injury if an electrical fault should occur. The ground may consist of electrical wire or metal conduit when installed in accordance with existing electrical codes. If conduit connection uses reducing washers, a separate ground wire must be used.

NOTE: Use UL listed conduit and conduit connector to connect supply wire(s) to unit and obtain proper grounding. Grounding may also be accomplished by using grounding lug provided in control box.

Use of dual or multiple supply circuits will require grounding of each circuit to ground lugs provided on unit and heaters.

Refrigerant Tubing Connection and Evacuation

Insulate entire suction tube. Do not use damaged, dirty, or contaminated tubing because it may plug refrigerant flow control device.

Always evacuate coil and field-supplied tubing to 500 microns before opening outdoor unit service valves.

⚠ CAUTION

PRODUCT DAMAGE HAZARD

Failure to follow this caution may result in product or property damage.

A brazing shield MUST be used when tubing sets are being brazed to the unit connections to prevent damage to the unit surface and condensate pan fitting caps.

Units have sweat suction and liquid tube connections. Make suction tube connection first.

1. Cut tubing to correct length.
2. Insert tube into sweat connection on unit until it bottoms.
3. Braze connection using silver bearing or non-silver bearing brazing materials. Do not use solder (materials which melt below 800°F).

Consult local code requirements.

⚠ CAUTION

PRODUCT DAMAGE HAZARD

Failure to follow this caution may result in product or property damage.

Wrap a wet cloth around rear of fitting to prevent damage to TXV and factory-made joints.

4. Evacuate coil and tubing system to 500 microns using deep vacuum method.

Condensate Drain

To connect drains the cap openings must be removed. Use a knife to start the opening near the tab and using pliers, pull the tab to remove the disk. Clean the edge of the opening if necessary and install the condensate line. Finally caulk around the lines where they exit the fitting to retain the low leak rating of the unit.

⚠ CAUTION

UNIT OR PROPERTY DAMAGE HAZARD

Failure to follow this caution may result in product or property damage.

The conversion of the fan coil to downflow requires special procedures for the condensate drains on both A-coil and slope units. The vertical drains have an overflow hole between the primary and secondary drain holes. This hole is plugged for all applications except downflow, but must be used for downflow. During the conversion process, remove the plastic cap covering the vertical drains only and discard. Remove the plug from the overflow hole and discard. At completion of the downflow installation, caulk around the vertical pan fitting to door joint to retain the low air leak performance of the unit.

Units are equipped with primary and secondary 3/4-in. (19mm) FPT drain connections. For proper condensate line installation, see Fig. 2, Fig. 4, Fig. 5, Fig. 6, and Fig. 8.

To prevent property damage and achieve optimum drainage performance, BOTH primary and secondary drain lines should be installed and include properly-sized condensate traps (Fig. 14) and (Fig. 16). Factory-approved condensate traps are available. Be sure to install plastic push-in plugs in unused condensate drain fittings. It is recommended that PVC fittings be used on the plastic condensate pan. Do not over-tighten. Finger-tighten plus 1-1/2 turns. Use pipe dope.

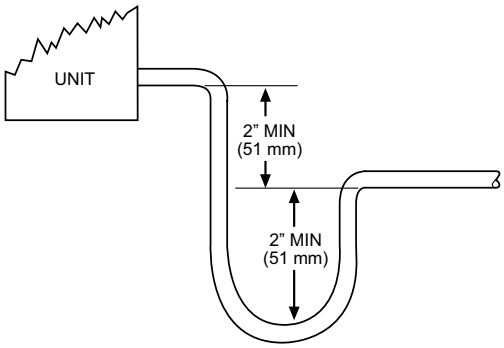

A03002

Fig. 14 – Recommended Condensate Trap

⚠ CAUTION

PROPERTY DAMAGE HAZARD

Failure to follow this caution may result in product or property damage.

Shallow running traps are inadequate and DO NOT allow proper condensate drainage (Fig. 15).

A03013

Fig. 15 – Insufficient Condensate Trap

NOTE: When connecting condensate drain lines, avoid blocking filter access panel, thus preventing filter removal. After connection, prime both primary and secondary condensate traps.

NOTE: If unit is located in or above a living space, where damage may result from condensate overflow, a field-supplied, external condensate pan should be installed underneath the entire unit, and a secondary condensate line (with appropriate trap) should be run from the unit into the pan. Any condensate in this external condensate pan should be drained to a noticeable place. As an alternative to using an external condensate pan, some localities may allow the running of a separate 3/4 inch (19 mm) condensate line (with appropriate trap) per local code to a place where the condensate will be noticeable. The property owner must be informed that when condensate flows from the secondary drain or external condensate pan, the unit requires servicing or property damage may occur.

To further protect against water damage, the International Mechanical Code (IMC) and local code may require a float switch to be installed to shut the equipment OFF if the drainage system is blocked. In 24V wired systems, a float switch listed to UL508 should be wired in the field “R” circuit from the “R” field connection terminal of the furnace leading to the thermostat. When communicating equipment is installed and wired with a communicating wall control, follow unit instructions for wiring the float switch and configuring the wall control.

⚠ WARNING

FIRE HAZARD

Failure to follow this warning could result in property damage, personal injury, or death.

When using a float switch in a secondary condensate pan or drain line, DO NOT wire the switch to break the 24V power directly from the transformer “R” circuit, as this will defeat the refrigerant leak dissipation and mitigation functions.

Install traps in the condensate lines as close to the coil as possible (Fig. 16). Make sure that the outlet of each trap is below its connection to the condensate pan to prevent condensate from overflowing the drain pan. Prime all traps, test for leaks, and insulate traps if located above a living area. Condensate drain lines should be pitched downward at a minimum slope of 1" (25 mm) for every 10 ft (3 m) of length. Consult local codes for additional restrictions or precautions.

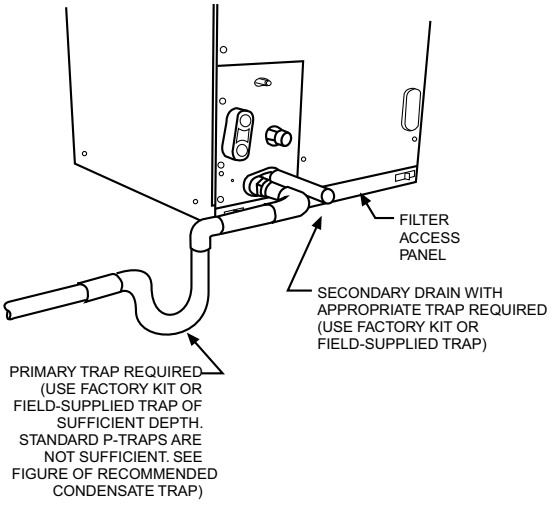

A03003

Fig. 16 – Proper Condensate Trap

⚠ CAUTION

UNIT COMPONENT HAZARD

Failure to follow this caution may result in product damage.

Never operate unit without a filter. Damage to blower motor or coil may result. Factory authorized filter kits must be used when locating the filter inside the unit. For those applications where access to an internal filter is impractical, a field-supplied filter must be installed in the return duct system.

IMPORTANT: Factory authorized filters must be used when locating the filter inside the unit (Table 1).

Table 1 – Filter Kits

	PART NUMBER	SIZE USED WITH
FILTER KIT (12 PACK)	AFAFLTMED12A	24
	AFAFLTLRG12A	36, 48
	AFAFLTXXL12A	60

Leak Dissipation System

⚠ WARNING

PERSONAL INJURY OR PROPERTY DAMAGE HAZARD

Failure to follow proper R-454B mitigation system installation instructions can result in property damage, personal injury, or death.

If any fault codes are listed, please troubleshoot to prevent system malfunction.

The 24-60 size units come equipped with a factory wired R-454B leak detection and dissipation system to ensure safe operation during a leak. The system consists of a bracket, a PCB, a A2L Detection Sensor, and a drain pan clip. Failure to install this system will result in potentially hazardous conditions and improper equipment operation, and void all system warranties and liabilities.

All units are shipped with the A2L Detection Sensor located in the upflow position. For sizes 36, the sensor will always be installed on the drain pan clip.

⚠ WARNING

PRODUCT OPERATION / INJURY HAZARD

Failure to follow this warning could cause property damage or personal injury.

Make sure the sensor is not exposed to significant amounts of dust/dirt contamination. This could clog the sensor and prevent proper functioning. For sensor cleaning instructions, refer to service manual.

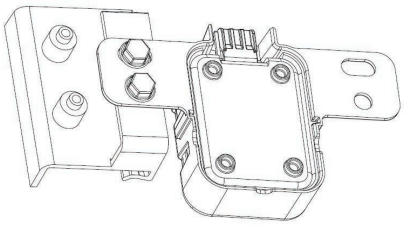

Fig. 17 – Dissipation Sensor Mounted on Drain Clip A230490

For sizes 24, 48-60, the sensor comes factory installed on the delta plate (Fig. 18), (Fig. 19). For horizontal right and left, the sensor will need to be moved to the drain pan clip (Fig. 4), (Fig. 6), (Fig. 7).

IMPORTANT: Sensor must be installed with the connector facing down or facing horizontally. Sensor should never be positioned with connector facing upward. Incorrect sensor position could result in premature failure.

⚠ WARNING

PRODUCT OPERATION / INJURY HAZARD

Failure to follow this warning could cause product damage or personal injury.

Make sure the sensor is not exposed to significant amounts of dust/dirt contamination. This could clog the sensor and prevent proper functioning. For sensor cleaning instructions, refer to service manual.

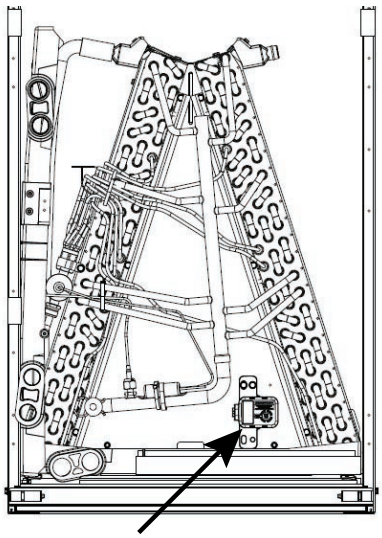

Fig. 18 – A-Coil Vertical Dissipation Sensor Factory Location A230501

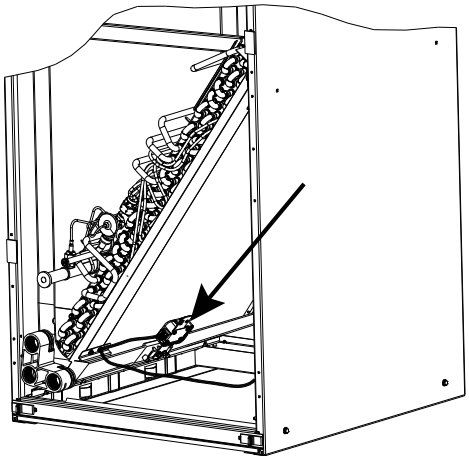

Fig. 19 – Slope Coil Vertical Dissipation Sensor Factory Location A230502

The A2L Detection Sensor is attached to a wiring harness that connects the sensor to the dissipation board. In upflow, the routing of the wire harness is up the right side of the unit behind the wire retainers for the cabinet insulation. At each wire retainers, the harness is attached using two wire ties. When converting unit to horizontal or downflow, follow routing shown in Fig. 4, Fig. 6, or Fig. 7. When converting the unit to any orientation, ensure the sensor wiring harness is disconnected and the wire harness has been placed in the control box before any components are moved.

Refer to Fig. 9 through Fig. 12 for low voltage field connections between the dissipation board and the thermostat. All control wires are labeled with the wire function and landing point.

Leak Dissipation System Self-Test

Power on the unit and verify proper functioning of equipment. The yellow LED on the dissipation board should be steady. If flash codes are present, see Troubleshooting on p13.

NOTE: Operation of the Test Mode is only possible if no faults exist on the dissipation board.

IMPORTANT: Press the Test button for roughly ONE SECOND to enter Test Mode. Pressing the Test button for a longer periods enables different functions ((Table 2)).

Press the Test button on the dissipation system control board to ensure proper dissipation system operation under each test condition listed below. After pressing the Test button, system will enter Dissipation Mode for 60 seconds to help verify correct operation.

Table 2 – Dissipation Board Test Button Functions

Hold Button Time (sec)	Function
1 - 4	Dissipation Mode for 60 seconds
5 - 29	Display flash code history
30+	Flash code 6
3 rapid presses	Clear flash code history

Ensure that the fan coil is able to meet the minimum required dissipation mode airflows. These required minimum airflow rates during Dissipation Mode are listed in Table 4. They are based on the total system refrigerant charge quantity.

Table 3 – Required Operational Checks to Ensure Proper Dissipation System Function

Normal Operation				
Test #	**T-Stat Call**	**Compressor**	**Indoor Fan**	**Electric/Gas Heat**
1	None	Off	Off	Off
2	Cool	On	On	Off
3	Heat	Off	On	On
Dissipation Activated				
4	None	Off	On	Off
5	Cool	Off	On	Off
6	Heat	Off	On	Off

Table 4 – Required Minimum Dissipation Mode Airflows, based on Total System Refrigerant Charge Quantity

Total System Charge (lb)	Minimum Required Dissipation Airflow (CFM)	Total System Charge (lb)	Minimum Required Dissipation Airflow (CFM)
5	133	16	426
6	160	17	452
7	186	18	479
8	213	19	505
9	239	20	532
10	266	21	559
11	293	22	585
12	319	23	612
13	346	24	639
14	372	25	665
15	399		

Troubleshooting

For all flash codes, first try power cycling the system to remove the code.

No Power

Verify the wiring to/from pins 1 and 8 on the power harness plug. Check the 24V system wiring from the transformer.

Flashing 1

Check for refrigerant leaks using an independent R-454B detector. If no leaks are present, replace the sensor.

Flashing 2

Check both ends of the sensor wire harness to ensure proper attachment. Power cycle the system to check whether the flash code has been removed. If the flash code is still present, replace the sensor.

Flashing 3

Check for refrigerant leaks using an independent R-454B detector.

Flashing 4

If the code does not clear after power cycling the system, replace the dissipation board.

Flashing 5

If the code does not clear after power cycling the system, replace the sensor.

Flashing 6

Press the test button repeatedly. Power cycle the system. If the button cannot be reset, replace the dissipation board.

Flashing 7

Verify wiring of all "Y" and "W" wires in the applicable wiring diagram.

Flashing 8

Verify wiring of all "Y" and "W" wires in the applicable wiring diagram.

Table 5 – Flash Code Chart

Yellow LED	Reason	Mode
Solid	Normal Operation	Normal Operation
Flashing 1	Sensor >= 20% LFL	Dissipation
Flashing 2	Sensor Open	Dissipation
Flashing 3	Normal Mitigation after Leak	Dissipation
Flashing 4	No Power to G Output	Dissipation with no Blower
Flashing 5	Fault with A2L Digital Sensor	Dissipation
Flashing 6	Test Button Stuck (>30 s)	Dissipation
Flashing 7	Y or W Wiring Inverted	Normal Operation
Flashing 8	Y or W Shorted	Normal Operation

Unit Start-Up

Refer to outdoor unit Installation Instructions for system start-up instructions and refrigerant charging method details.

Easy Select Configuration Taps

Easy Select taps are used by the installer to configure a system. The ECM motor uses the selected taps to modify its operation to a pre-programmed table of airflows (see (Table 8) and (Table 10)). Airflows are based on system size or mode of operation and those airflows are modified in response to other inputs such as the need for de-humidification. See Fig. 20, Fig. 21 and Table 6).

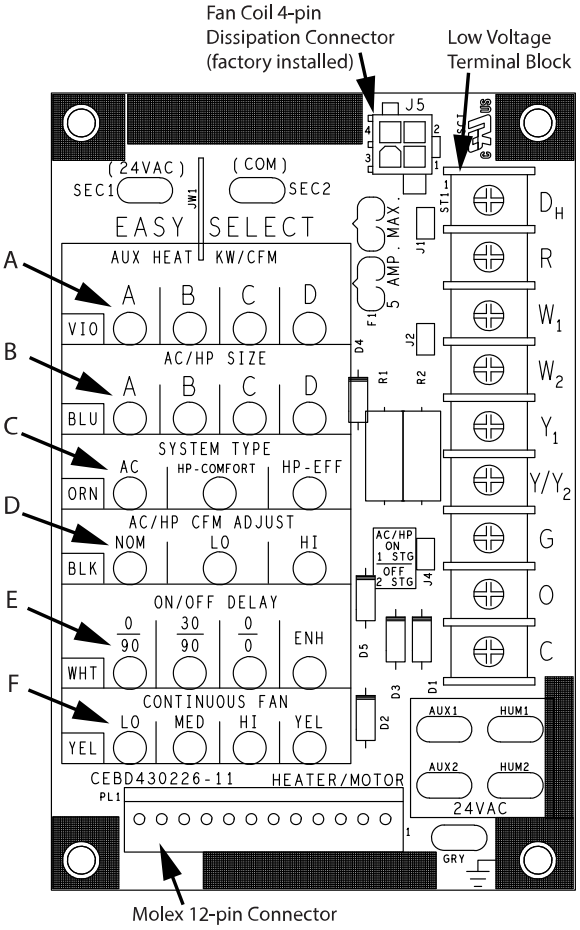

A95275AA

Fig. 20 – Detail of Printed-Circuit Board

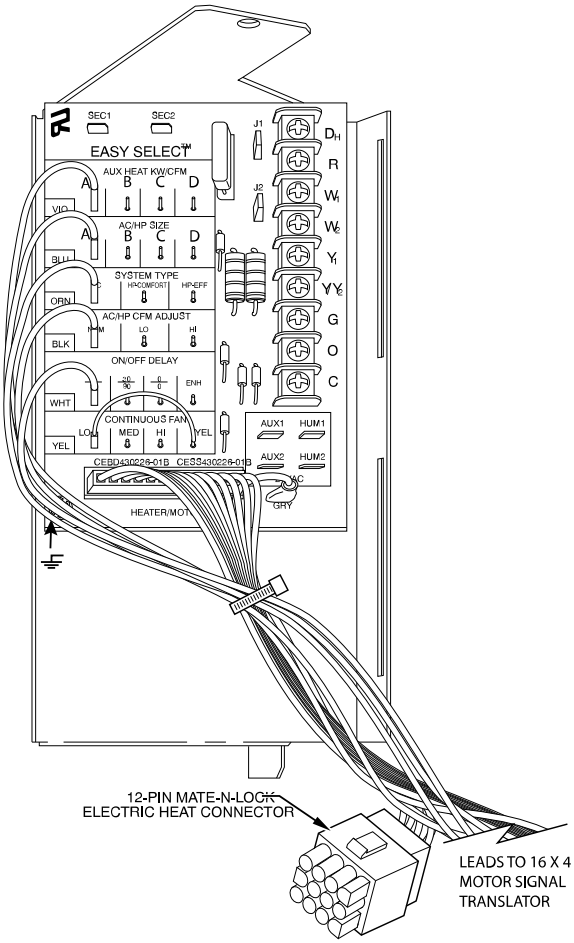

Fig. 21 – Connection Detail of Printed-Circuit Board (also showing 12-pin cable) PF5T

The Fan Coil must be configured to operate properly with system components with which it is installed. To successfully configure a basic system (see information printed on circuit board label located next to select pins), move the 6 select wires to the pins which match the components used.

A 16x4 motor signal translator is present for the translation of data from the board to the motors and is mounted on the back of the PCB bracket. Ensure that the connections are secure.

Table 6 – Airflow Adjustment Table

Unit Size	AUX Heat Range (kW/CFM)			
VIO	A	B	C	D
24	0-20 / 1200	0-15 / 1050	0-10 / 750	0-5 / 700
36	0-20 / 1225	0-15 / 1050	0-10 / 750	0-5 / 700
48	0-30 / 1500	0-20 / 1350	0-15 / 1200	0-10 / 1000
60	0-30 / 1750	0-20 / 1350	0-15 / 1250	0-10 / 1200
	AC/HP Size			
BLU	A	B	C	D
24	036	030	024	018
36	042	036	030	024
48	048	042	036	030
60	060	048	042	036

AUX HEAT KW/CFM - Select Heater Range For Size of Electric Heater Installed

Installer must select the auxiliary heat airflow approved for application with kW size heater installed. If no heater is installed, this step can be skipped. Each select pin is marked with a range of heaters for which airflow, also marked, is approved. For increased comfort select the narrowest kW range matching the heater size, for example, 0-10 for 10-kW heater. This airflow must be greater than the minimum CFM for electric heater application with the size system installed for safe and continuous operation (see (Table 11) and (Table 12) for airflow delivery and minimum CFM). Note that airflow marked is the airflow which will be supplied in emergency heat mode and heating mode on air conditioners when electric heat is the primary heating source. In heat pump heating mode when electric heaters are energized, the ECM motor will run the higher of heat pump heating airflow and electric heater airflow to ensure safe heater operation. The factory selection is the largest heater range approved (see Fig. 20, A as indicated).

AC/HP SIZE - Select System Size Installed

The factory setting for air conditioner or heat pump size is the largest unit meant for application with the model of fan coil purchased. Installer needs to select air conditioner or heat pump size to ensure that airflow delivered falls within proper range for the size unit installed. This applies to all operational modes with the exception of electric heat modes (see (Fig. 20), B as indicated).

SYSTEM TYPE - Select System Type Installed AC or HP

The type of system must be selected:

1. AC - Air conditioner
2. HP-COMFORT - Heat Pump Comfort provides approximately 315 CFM per ton for higher normal heating air delivery temperature. Provides approximately 350 CFM per ton cooling airflow for good humidity removal.
3. HP-EFF - Heat Pump Efficiency provides same airflow for heating and cooling modes to increase overall HP efficiency; approximately 350 CFM per ton. The factory setting is AC (see Fig. 20, C as indicated).

AC/HP CFM ADJUST - Select Medium, Low, or High Airflow

To provide airflow at rates described above, the AC/HP ADJUST select is factory set to the nominal (nom) tap. The adjust selections HI/LO will regulate airflow supplied for all operational modes, except non-heat pump heating modes. HI provides 15% airflow over nominal unit size selected and LO provides 10% airflow below nominal unit size selected. Adjust selection options are provided to adjust airflow supplied to meet individual installation needs for such things as noise, comfort, and humidity removal (see (Fig. 20), D as indicated).

ON/OFF DELAY - Select Desired Time Delay Profile

NOTE: Delay selections are active in cooling and heat pump heating modes only. Auxiliary heating modes have a 1-minute off-delay and zero on-delay programmed into the ECM motor that cannot be overridden.

Four motor operation delay profiles are provided to customize and enhance system operation (see Fig. 20, E as indicated). Selection options are:

1. The standard 90-second off-delay (Factory setting) at 100% airflow.
2. No-delay option used for servicing unit or when a thermostat is utilized to perform delay functions.
3. A 30-second on-delay with no airflow / 90-second off-delay at 100% airflow profile is used when it is desirable to allow system coils time to heat-up/cool-down in conjunction with the airflow.

4. ENH, enhanced selection, provides a 30-second on-delay with no airflow / plus 150-second at 70% airflow / no off-delay for added comfort. This profile will minimize cold blow in heat pump operation and could enhance system efficiency.

CONTINUOUS FAN - Select Desired Fan Speed When Thermostat is Set on Continuous Fan

NOTE: If installed with a 2-speed outdoor unit, do not select HI speed continuous fan. If HI is selected, low speed compression will also run HI speed possibly resulting in insufficient dehumidification.

1. LO speed - factory setting, 50% cooling mode airflow.
2. MED speed - move connector to MED, 80% cooling mode airflow.
3. HI speed - move connector of HI, 100% cooling mode airflow (see Fig. 20, F as indicated).

The low-voltage circuit is fused by a board-mounted 5-amp automotive fuse placed in series with the transformer 24VAC () and the R circuit. The C circuit of the transformer is referenced to chassis ground through a printed circuit run at COM () connected to metal standoff marked with ground symbol.

Basic Fan Coil Configuration

The following basic configuration of the fan coil will provide ARI rated performance of the heat pump:

1. AUX HEAT KW/CFM - Select the heater range for the size electric heater installed.
2. AC/HP SIZE - Select system size installed.
3. SYSTEM TYPE - Select system type HP-EFF.
4. AC/HP CFM ADJUST - Select NOM.
5. ON/OFF DELAY - Select 0/90 profile.
6. CONTINUOUS FAN - Select desired fan speed when thermostat is set to continuous fan.

COMFORT OPTIONS - Warmer Heating

The PF5T Fan Coils provide better than average humidity control and heated air temperature. This configuration will improve the comfort provided by the heat pump system if more humidity removal or if warmer heating air is desired. While providing this improved comfort, the heat pump system will operate efficiently, but not at the published HSPF or ARI SEER efficiency.

The following fan coil configuration is recommended for maximum heating and cooling/dehumidifying comfort (Fig. 20):

1. AUX HEAT KW/CFM - Select narrowest heater range to match size of electric heater installed (skip this step if no heater is installed).
2. AC/HP SIZE - Select system size installed.
3. SYSTEM TYPE - Select system type HP-COMFORT (for heat pump system) or AC (for air conditioner system).
4. AC/HP CFM ADJUST - Select LO.
5. ON/OFF DELAY - Select ENH profile.
6. CONTINUOUS FAN - Select desired fan speed when thermostat is set to continuous fan.
7. If the fan coil is installed with Heat Staging capable electric heaters, remove jumper J2 (Fig. 20).

NOTE: If configuring to run warmer heating, do not remove jumper J2 when using 5-, 8-, or 10-kW heaters.

8. Remove jumper J1 to activate dehumidify modes.
9. Wire low voltage connections as shown in Fig. 9 thru Fig. 12.

This configuration provides the following comfort enhancements:

a. A 30-second blower-on delay with 150 seconds at 70% airflow to allow the indoor coil to warm up or cool down before the blower is asked to deliver 100% airflow reducing the cold blow sensation at start-up in heating and allowing the indoor coil to more quickly reach wet coil operating conditions in cooling.
b. No blower off-delay eliminates cold blow which may be associated with running the blower after shut down of the compressor and avoids re-evaporation of condensed moisture after cooling/dehumidifying operation.
c. Lower airflow while the compressor is running to reduce draft effects and increase heating air temperature and improved humidity control during cooling operation.
d. Staging of the electric heater elements to more closely match heating load requirements and provide more consistent heating air temperatures.

Accessory Installation

Accessory Electric Heaters

Electric heaters may be installed with the Fan Coil per instructions supplied with electric heater package. See unit rating plate for factory-approved electric heater kits.

NOTE: Units installed without electric heat should have a sheet metal block-off plate covering the heater opening. This reduces air leakage and formation of exterior condensation.

Auxiliary Terminals

The AUX and HUM terminals on the Easy Select Board are tied directly to the G terminal, and provide a 24VAC signal whenever the G terminal is energized (Fig. 20).

Electronic Air Cleaner Connections

The AUX1 and AUX2 terminals are not always energized during blower operation, as described above. When using an electronic air cleaner with the Fan Coil, use Airflow Sensor Part No. KEAAC0101AAA. The airflow sensor turns on electronic air cleaner when the fan coil blower is operating.

Humidifier/Humidistat Connections

Easy Select Board terminals HUM1 and HUM2 are provided for direct connection to the low-voltage control of a humidifier through a standard humidistat (Fig. 22). These terminals are energized with 24VAC when G thermostat signal is present (Fig. 23). Alternately, the 24VAC signal may be sourced from the W and C terminal block connections when electric heaters are used as primary heating source.

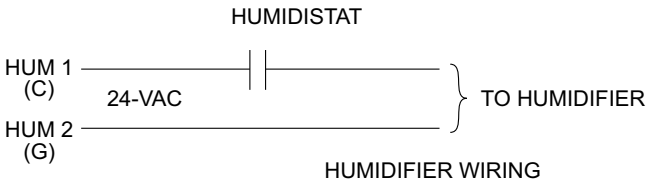

A95317

Fig. 22 – Humidifier Wiring

Dehumidify Capability with Standard Humidistat Connection

Latent capacities for systems using the Fan Coil are better than average systems. If increased latent capacity is an application requirement, the field wiring terminal block provides connection terminals for use of a standard humidistat. The Fan Coil will detect the humidistat contacts opening on increasing humidity and reduce its airflow to approximately 80% of nominal cooling mode airflow. This reduction will increase the system latent capacity until the humidity falls to a level which causes the humidistat to close its contacts. When the contacts close, the airflow will return to 100% of the selected cooling airflow. To activate this mode, remove Jumper J1 and wire in a standard humidistat (Fig. 23).

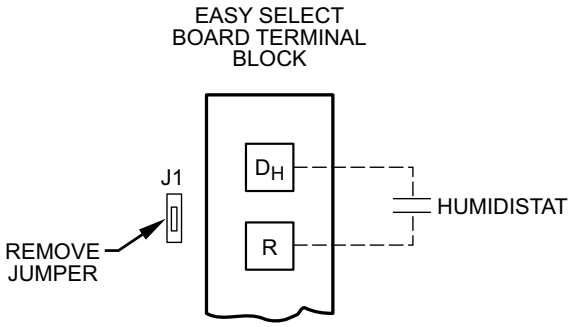

A95316

Fig. 23 – Humidistat Wiring for De-Humidify Mode

Dehumidify Capabilities

This model fan coil is capable of responding to a signal from indoor system control. No special setup or wiring of fan coil is required.

Fan Coil Sequence of Operation

The PF5T will supply airflow in a range which is more than twice the range of a standard fan coil. It is designed to provide nominal cooling capacities at a 50°F (10°C) evaporator temperature and the required airflow which enables it to match with 4 air conditioner or heat pump system sizes. Table 7 outlines the CFM range for the different Fan Coil sizes.

Continuous Fan

- Thermostat closes circuit R to G.
- The blower runs at continuous fan airflow.

Cooling Mode - Single Speed

- If indoor temperature is above temperature set point and humidity is below humidity set point, thermostat closes circuits R to G, R to Y/Y2 and R to O.
- The fan coil delivers single speed cooling airflow.

Cooling Mode - Dehumidification

- If indoor temperature is above temperature set point and humidity is above humidity set point, thermostat closes circuits R to G, R to O, and R to Y/Y2, and humidistat opens R to DH.
- The fan coil delivers airflow which is approximately 80% of the nominal cooling airflow to increase the latent capacity of the system.

Electric Heat Heating Mode

- Thermostat closes circuit R to W/W1, or W2.
- The fan coil delivers the selected electric heat airflow.

Heat Pump Heating Mode - Single Speed

- Thermostat closes circuits R to G and R to Y/Y2.
- The fan coil delivers single speed heat pump heating airflow.

Heat Pump Heating with Auxiliary Electric Heat

- Thermostat closes circuits R to G, R to Y/Y2 and/or R to Y1 with R to W/W1 or W2 (and R to O in the case of defrost).
- In the event that electric heating is called for by the thermostat while the heat pump is also operating in either heating or defrost modes, the motor will modify its airflow output, if necessary, to provide an airflow which is defined as safe for the operation of the electric heater during heat pump operation. That airflow is the greater of the heat pump heating airflow and the electric heater only airflow.

Leak Dissipation Mode

- Thermostat energizes appropriate signals to the dissipation board based on operation mode.
- The dissipation board energizes G output, which energizes the fan relay on the PCB to complete the circuit to the indoor blower motor.
- The dissipation board opens switches for W and Y. This de-energizes signals going to electric heat and outdoor compressor which opens the electric heat relay(s).

Troubleshooting ECM Motor and Controls

WARNING

ELECTRICAL SHOCK HAZARD

Failure to follow this caution may result in personal injury.

High voltage is always present at motor. Disconnect power to unit before removing or replacing connectors or servicing motor. Wait at least 5 min after disconnecting power before opening motor.

The ECM motor used with this product contains two parts: the control module and motor winding section. Do not assume the motor or module is defective if it will not start. Go through the steps described below before replacing control module, Easy Select Board or entire motor. The control module is available as a replacement part.

If Motor Turns Slowly:

1. Replace the panel. Motor may appear to run slowly if the access panel is removed.
2. It is normal operation to run noticeably slower if G terminal is not energized in cooling or heat-pump modes.

If Motor Does Not Run:

Turn off power and check the following:

1. Check 5 amp fuse on Easy Select Board.
2. Check for 24VAC on SEC1 and SEC2. If no voltage is present, check transformer.
3. Check all plugs and receptacles for any deformation which could cause loose connections. Be sure plugs are fully seated.
4. Verify that approximately 230VAC is present at motor.
5. Verify low-voltage control signals to motor. The motor receives its control signals through the 12-pin plug (PL-1) on Easy Select Board and 16-pin plug on wiring harness (see Troubleshooting Example). The combinations of pins energized will determine motor speed (Fig. 23). See(Fig. 20) for circuit board, low-voltage screw terminals energized and for voltage present at each pin on 12-pin plug (PL-1). See Fig. 20 for pin number on 16-pin plug which should have voltage when Easy Select Board screw terminals have 24VAC.

Use Following Procedure To Check Control Signals:

THERMOSTAT

1. Remove all thermostat wires from Easy Select Board.
2. Jumper screw terminals (1 at a time): R-G, R-Y/Y2, R-Y1, R-W1. If motor runs in all cases, thermostat is mis-wired, configured incorrectly or defective. If motor runs in some cases, but not others, continue to check wiring harness and circuit board.

WIRING HARNESS

1. Shut off power to unit; wait 5 min.
2. Remove 5-pin plug from motor.
3. Remove 16-pin plug from motor.
4. Remove 4-pin plug from motor.
5. Replace 5-pin plug and turn power on.
6. Check for appropriate voltages on 16-pin connector with screw terminals jumpered. (See Fig. 20 for values and see examples below.)

If signals check correctly and motor does not run, inspect wiring harness for loose pins or damaged plastic that could cause poor connections. If connections are good, either control module or motor is defective. If proper signals are not present, check circuit board using procedure below:

12-PIN PLUG (PL-1) ON EASY SELECT BOARD

1. Unplug harness from board.
2. Check for appropriate voltages on pins with Easy Select Board screw terminals jumpered (see Fig. 20 for values and see example below).

If proper signals are not present, replace Easy Select Board. If present at board and not at 16-pin connector, wiring harness is defective.

TROUBLESHOOTING EXAMPLE:

Motor is not running on a call for heat-pump heating. System is a single-speed heat pump.

1. After performing checks in Thermostat section, follow steps 1 thru 5 in Wiring Harness section. Then proceed with example.
2. With all thermostat wires removed from Easy Select Board, place a jumper wire between R and Y/Y2 low-voltage screw terminals on the Easy Select board.
3. Check Fig. 20 for pin number on 16-pin connector associated with the Y/Y2 signal. The correct pin is #14. The far right column shows that (-)12vdc should be present between pin #14 and pin #1 (common) on the 16-pin connector.
4. Set meter to read DC voltage. Place meter between pins #1 and #14 and check for (-)12VDC (common side of meter on pin #1). If signal is present, the problem is in the module or motor. If signal is not, problem is either in wiring harness or Easy Select Board.

These steps can be repeated for other modes of operation.

To check Easy Select Board:

1. Leave jumper wire in place between R and Y/Y2.
2. Check Fig. 20 under "Wiring Harness Connection to Easy Select Board" column and row for pin #14 to see pin# on Easy Select Board that should have voltage. The correct pin is #2. The column on far right will show voltage that should be present between pin #2 and #9 (or #10 common).
3. Place meter between pins #2 and #9 on Easy Select Board and check for (-)12VDC.
4. Remove 4-pin plug from the Motor Signal Translator.
5. If voltage is present, the wiring harness is bad; if not, the Easy Select Board is bad.

Verify Motor Winding Section:

Before proceeding with module replacement, check the following to ensure motor winding section is functional. With control module removed and unplugged from winding section:

1. The resistance between any 2 motor leads should be similar.
2. The resistance between any motor lead and the unpainted motor end plate should be greater than 100K ohms.

If motor winding section fails one of these tests, it is defective and must be replaced.

Start-Up Procedures

Refer to outdoor unit Installation Instructions for system start-up instructions and refrigerant charging method details.

Care and Maintenance

⚠ WARNING

ELECTRICAL SHOCK HAZARD

Failure to follow this warning could result in personal injury or death.

Disconnect all power to unit before servicing field wires or removing control package. The disconnect (when used) on access panel does not disconnect power to the line side of disconnect, but does allow safe service to all other parts of unit. If unit does not have a disconnect, disregard the foregoing. Instead, make sure that a disconnecting means is within sight from, and is readily accessible from, the unit. Disconnect all electrical power to unit before performing any maintenance or service on it.

For continuing high performance, and to minimize possible equipment failure, it is essential that periodic maintenance be performed on this equipment. The only required maintenance that may be performed by the consumer is filter maintenance.

The minimum maintenance requirements for this equipment are as follows:

1. Inspect and clean or replace air filter each month or as required.
2. Inspect cooling coil, drain pan, and condensate drain each cooling season for cleanliness. Clean as necessary.
3. Inspect blower motor and wheel for cleanliness each heating and cooling season. Clean as necessary.
4. Inspect electrical connections for tightness and controls for proper operation each heating and cooling season. Service as necessary.

Consult Fan Coil Service Manual available from equipment distributor for maintenance procedures.

⚠ CAUTION

CUT HAZARD

Failure to follow this caution may result in personal injury.

Sheet metal parts may have sharp edges or burrs. Use care and wear appropriate protective clothing and gloves when handling parts.

Use the outdoor unit's Owner's/User Manual to explain the system operation to the consumer, with particular emphasis on indoor fan coil operation sounds and filter maintenance.

Table 7 – CFM Range

FAN COIL SIZE	SYSTEM SIZES	CFM RANGE
24	24, 30, 36	315-1210
36	24, 30, 36, 42	315-1410
48	36, 42, 48	395-1800
60	42, 48, 60	475-2015

Manufacturer reserves the right to change, at any time, specifications and designs without notice and without obligations.

Table 8 – Airflow Delivery (CFM) in Cooling Mode

OPERATING MODE										
UNIT SIZE	OUTDOOR UNIT CAPACITY	SINGLE—SPEED APPLICATION		TWO—SPEED APPLICATION				FAN ONLY		
				High Speed		Low Speed				
		Nominal A/C Cooling	A/C Cooling Dehumidity	Nominal A/C Cooling	A/C Cooling Dehumidity	Nominal A/C Cooling	A/C Cooling Dehumidity	Lo	Med	High
24	18	525	420	—	—	—	—	350	420	525
	24	700	560	700	560	560	450	350	560	700
	30	875	700	—	—	—	—	435	700	875
	36	1050	840	1050	840	840	670	525	840	1050
36	24	700	560	700	560	560	450	350	560	700
	30	875	700	—	—	—	—	435	700	875
	36	1050	840	1050	840	840	670	525	840	1050
	42	1225	980	—	—	—	—	610	980	1225
48	30	875	700	—	—	—	—	434	700	875
	36	1050	840	1050	840	840	670	525	840	1050
	42	1225	980	—	—	—	—	610	980	1225
	48	1400	1120	1400	1120	1120	895	700	1120	1400
60	36	1050	840	1050	840	840	670	525	840	1050
	42	1225	980	—	—	—	—	610	980	1225
	48	1400	1120	1400	1120	1120	895	700	1120	1400
	60	1750	1400	1750	1400	1400	1120	875	1400	1750

NOTES:

1.The above airflows result with the AC, HP CFM ADJUST select jumper set on NOM.

2.Air flow can be adjusted +15% or -10% by selecting HI or LO respectively for all modes except fan only.

3.Dry coil at 230 volts and with 10KW heater and filter installed.

4.Airflows shown are at standard air conditions.

Table 9 – Cooling Airflow Delivery (CFM) when pairing with D5CU* (2-Speed ODU)

OPERATING MODE								
UNIT SIZE	OUTDOOR UNIT CAPACITY	TWO—SPEED APPLICATION				FAN ONLY		
		High Speed		Low Speed				
		Nominal A/C Cooling	A/C Cooling Dehumidity	Nominal A/C Cooling	A/C Cooling Dehumidity	Lo	Med	High
24	18	525	420	420	350	350	420	525
	24	700	560	560	450	350	560	700
	30	875	700	700	560	435	700	875
	36	1050	840	840	670	525	840	1050
36	24	700	560	560	450	350	560	700
	30	875	700	700	560	435	700	875
	36	1050	840	840	670	525	840	1050
	42	1225	980	980	450	610	980	1225
48	30	875	700	700	560	434	700	875
	36	1050	840	840	670	525	840	1050
	42	1225	980	980	785	610	980	1225
	48	1400	1120	1120	895	700	1120	1400
60	36	1050	840	840	670	525	840	1050
	42	1225	980	980	785	610	980	1225
	48	1400	1120	1120	895	700	1120	1400
	60	1750	1400	1400	1120	875	1400	1750

Table 10 – Airflow Delivery (CFM) in Heat Pump Only Heating Mode

OPERATING MODE										
UNIT SIZE	OUTDOOR UNIT CAPACITY	SINGLE—SPEED APPLICATION		TWO—SPEED APPLICATION				FAN ONLY		
				High Speed		Low Speed				
		Heat Pump Comfort	Heat Pump Efficiency	Heat Pump Comfort	Heat Pump Efficiency	Heat Pump Comfort	Heat Pump Efficiency	Lo	Med	High
24	18	470	525	—	—	—	—	350	420	525
	24	630	700	630	700	505	560	350	560	700
	30	785	875	—	—	—	—	435	700	875
	36	945	1050	945	1050	755	840	525	840	1050
36	24	630	700	630	700	505	560	350	560	700
	30	785	875	—	—	—	—	435	700	875
	36	945	1050	945	1050	755	840	525	840	1050
	42	1100	1225	—	—	—	—	610	980	1225
48	30	787.5	875	—	—	—	—	435	700	875
	36	945	1050	945	1050	755	840	525	840	1050
	42	1100	1225	—	—	—	—	610	980	1225
	48	1260	1400	1260	1400	1010	1120	700	1120	1400
60	36	945	1050	945	1050	755	840	525	840	1050
	42	1100	1225	—	—	—	—	610	980	1225
	48	1260	1400	1260	1400	1010	1120	700	1120	1400
	60	1575	1750	1575	1750	1260	1400	875	1400	1750

NOTES:
1.The above airflows result with the AC, HP CFM ADJUST select jumper set on NOM.
2.Air flow can be adjusted +15% or -10% by selecting HI or LO respectively for all modes except fan only.
3.Dry coil at 230 volts and with 10KW heater and filter installed.
4.Airflows shown are at standard air conditions.

Table 11 – Airflow Delivery (CFM)

FAN UNIT SIZE	OUTDOOR UNIT CAPACITY BTUH	ELECTRIC HEATER kW RANGE											
		0-5			0-10			0-15			0-20		
		Lo	Nom	High	Lo	Nom	High	Lo	Nom	High	Lo	Nom	High
24	18,000	700	700	805	750	750	863	—	—	—	—	—	—
	24,000	700	700	805	750	750	863	1050	1050	1208	—	—	—
	30,000	875	875	1006	875	875	1006	1050	1050	1208	1200	1200	1380
	36,000	1050	1050	1208	1050	1050	1208	1050	1050	1208	1200	1200	1380
36	24,000	700	700	805	750	750	863	1050	1050	1208	1225	—	—
	30,000	875	875	1006	875	875	1006	1050	1050	1208	1225	—	—
	36,000	1050	1050	1208	1050	1050	1208	1050	1050	1208	1208	1225	1409
	42,000	1225	1225	1409	1225	1225	1409	1225	1225	1409	1225	1225	1409
FAN UNIT SIZE	OUTDOOR UNIT CAPACITY BTUH	ELECTRIC HEATER kW RANGE											
		0-10			0-15			0-20			0-30		
		Lo	Nom	High	Lo	Nom	High	Lo	Nom	High	Lo	Nom	High
48	30,000	1000	1000	1150	1200	1200	1380	—	—	—	—	—	—
	36,000	1000	1000	1265	1200	1200	1380	1300	1300	1495	—	—	—
	42,000	1225	1225	1409	1225	1225	1409	1350	1350	1553	—	—	—
	48,000	1400	1400	1610	1400	1400	1610	1400	1400	1610	1500	1500	1725
60	36,000	1200	1200	1380	1250	1250	1438	1350	1350	1553	—	—	—
	42,000	1225	1225	1409	1300	1300	1495	1350	1350	1553	—	—	—
	48,000	1400	1400	1610	1400	1400	1610	1400	1400	1610	1750	1750	2013
	60,000	1750	1750	2013	1750	1750	2013	1750	1750	2013	1750	1750	2013

NOTE: Lo, NOM, and HI refer to AC, HP CFM ADJUST selection.
— Airflow not recommended for heater/system size.

Table 12 – Minimum CFM for Electric Heater Application

FAN COIL UNIT SIZE	HEAT PUMP UNIT SIZE	CFM				
		HEATER SIZE kW				
		5	8, 9, 10	12, 15	18, 20	24, 30
24	18	700	750	—	—	—
	24	700	750	1050	—	—
	30	875	875	1050	1200	—
	36	1050	1050	1050	1200	—
36	24	700	700	1050	—	—
	30	875	875	1050	—	—
	36	1050	1050	1050	1208	—
	42	1225	1225	1225	1409	—
48	30	—	1000	1200	—	—
	36	—	1100	1200	1300	—
	42	—	1225	1225	1350	—
	48	—	1400	1400	1400	1500
60	36	—	1200	1250	1350	—
	42	—	1225	1300	1350	—
	48	—	1400	1400	1400	1750
	60	—	1750	1750	1750	1750

NOTES: These airflows are minimum acceptable airflows as UL listed. Actual airflow delivered will be per airflow delivery chart for Electric Heating Modes.

© 2025 Carrier. All rights reserved.

Manufacturer reserves the right to change, at any time, specifications and designs without notice and without obligations.