PG95MSUA
Up to 95% AFUE, Single-Stage, Upflow/Horizontal
Ultra Low NOx, 35-in. Tall, Condensing Gas Furnace

Installation, Start-up, Operating and Service Maintenance Instructions

NOTE: Read the entire instruction manual before starting the installation

Approved for installations up to 5,400 feet (1646 meters)

TABLE OF CONTENTS

REQUIRED NOTICE FOR MASSACHUSETTS INSTALLATIONS
IMPORTANT 2
Table 1 – Dimension 3
SAFETY CONSIDERATIONS 3
Table 2 – Minimum Clearances to Combustible Materials for All Units 5
INTRODUCTION 5
Table 3 – Loose Parts Bag 6
CODES AND STANDARDS 6
ELECTROSTATIC DISCHARGE (ESD) PRECAUTIONS PROCEDURE 7
LOCATION 7
AIR FOR COMBUSTION AND VENTILATION 8
Table 4 – Minimum Free Area Required for Each Combustion Air Opening or Duct to Outdoors 10
Table 5 – Minimum Space Volumes for 100% Combustion, Ventilation and Dilution Air from Outdoors 10
CONDENSATE TRAP 11
Table 6 – Condensate Trap Configurations 13
INSTALLATION 13
Table 7 – Evaporator Coil Spacer or Shield Requirements. 17
FILTER ARRANGMENT 21
Table 8 – Air Filter Selection and Duct Sizing - In. (mm) 22
Table 9 – Opening Dimensions - In. (mm) 22
Table 10 – Filter Media Pressure Drop (Clean) Versus Airflow - in. w.c. (Pa) 22
Table 11 – Filter Media Pressure Drop (Clean) Versus Face Velocity-in. w.c. (Pa) 22
AIR DUCTS 23
GAS PIPING 23
Table 12 – Maximum Capacity of Pipe 24
ELECTRICAL CONNECTIONS 25
ACCESSORIES 27
Table 13 – Electrical Data 28
VENTING 28
Table 14 – Vent Termination Kit for Direct Vent (2-pipe) Systems29
Table 15 – Approved Combustion-Air and Vent Pipe, Fitting and Cement Materials (U.S.A. Installations) 29
Table 16 – Maximum Equivalent Vent Length - Ft. 37
Table 17 – Deductions from Maximum Equivalent Vent Length - Ft. (M) 37
Table 18 – Maximum Allowable Exposed Vent Length in Unconditioned Space - Ft. 39
Table 19 – Hanger Spacing 41
AIR DELIVERY - CFM 44
Table 20 – Air Delivery - CFM (with filter) 44
Table 21 – Airflow Settings 45
FURNACE CONTROL PROGRAMMING AND NAVIGATION 45
Table 22 – System Status Display Codes 45
Table 23 – Main Menu Options 46
SERVICE LABEL 48
START-UP, ADJUSTMENT, AND SAFETY CHECK 48
Table 24 – Test Sequence 49
WIRING DIAGRAM 49
Table 25 – Altitude Derate Multiplier for USA 50
Table 26 – Gas Rate (CU ft./hr) 52
Table 27 – Gas Valve Outlet Pressure for Gas Heat Values at Altitude - 40,000 53
Table 28 – Gas Valve Outlet Pressure for Gas Heat Values at Altitude - 60,000 53
Table 29 – Gas Valve Outlet Pressure for Gas Heat Values at Altitude - 80,000 54
Table 30 – Gas Valve Outlet Pressure for Gas Heat Values at Altitude - 100,000 54
SERVICE AND MAINTENANCE PROCEDURES 55
CARE AND MAINTENANCE 56
WINTERIZATION 60
SEQUENCE OF OPERATION 60
TROUBLESHOOTING 62
PARTS REPLACEMENT INFORMATION GUIDE 65
MODEL NOMENCLATURE 65

To learn more about this appliance and installation via a mobile device, go to https://www.payne.com/NFC or use the QR code below. To access airflow tables or troubleshooting guide on your mobile device go to mlctraining.com/training/techdocs/41/ or use the QR code below.

Mobile App QR Code Airflow QR Code

A220955

A200352

Portions of the text and tables are reprinted from NFPA 54/ANSI Z223.1E, with permission of National Fire Protection Association, Quincy, MA 02269 and American Gas Association, Washington DC 20001. This reprinted material is not the complete and official position of the NFPA or ANSI on the referenced subject, which is represented only by the standard in its entirety.

REQUIRED NOTICE FOR MASSACHUSETTS INSTALLATIONS IMPORTANT

The Commonwealth of Massachusetts requires compliance with regulation 248 CMR as follows:

5.08: Modifications to NFPA-54, Chapter 10

2) Revise 10.8.3 by adding the following additional requirements:

a. For all side wall horizontally vented gas fueled equipment installed in every dwelling, building or structure used in whole or in part for residential purposes, including those owned or operated by the Commonwealth and where the side wall exhaust vent termination is less than seven (7) feet above finished grade in the area of the venting, including but not limited to decks and porches, the following requirements shall be satisfied:

1. INSTALLATION OF CARBON MONOXIDE DETECTORS. At the time of installation of the side wall horizontal vented gas fueled equipment, the installing plumber or gasfitter shall observe that a hard wired carbon monoxide detector with an alarm and battery back-up is installed on the floor level where the gas equipment is to be installed. In addition, the installing plumber or gasfitter shall observe that a battery operated or hard wired carbon monoxide detector with an alarm is installed on each additional level of the dwelling, building or structure served by the side wall horizontal vented gas fueled equipment. It shall be the responsibility of the property owner to secure the services of qualified licensed professionals for the installation of hard wired carbon monoxide detectors
   a. In the event that the side wall horizontally vented gas fueled equipment is installed in a crawl space or an attic, the hard wired carbon monoxide detector with alarm and battery back-up may be installed on the next adjacent floor level.
   b. In the event that the requirements of this subdivision can not be met at the time of completion of installation, the owner shall have a period of thirty (30) days to comply with the above requirements; provided, however, that during said thirty (30) day period, a battery operated carbon monoxide detector with an alarm shall be installed.
2. APPROVED CARBON MONOXIDE DETECTORS. Each carbon monoxide detector as required in accordance with the above provisions shall comply with NFPA 720 and be ANSI/UL 2034 listed and IAS certified.
3. SIGNAGE. A metal or plastic identification plate shall be permanently mounted to the exterior of the building at a minimum height of eight (8) feet above grade directly in line with the exhaust vent terminal for the horizontally vented gas fueled heating appliance or equipment. The sign shall read, in print size no less than one-half (1/2) inch in size, ”GAS VENT DIRECTLY BELOW. KEEP CLEAR OF ALL OBSTRUCTIONS”.
4. INSPECTION. The state or local gas inspector of the side wall horizontally vented gas fueled equipment shall not approve the installation unless, upon inspection, the inspector observes carbon monoxide detectors and signage installed in accordance with the provisions of 248 CMR 5.08(2)(a)1 through 4.
5. EXEMPTIONS: The following equipment is exempt from 248 CMR 5.08(2)(a)1 through 4:
   (1.) The equipment listed in Chapter 10 entitled ”Equipment Not Required To Be Vented” in the most current edition of NFPA 54 as adopted by the Board; and
   (2.) Product Approved side wall horizontally vented gas fueled equipment installed in a room or structure separate from the dwelling, building or structure used in whole or in part for residential purposes.
   a. MANUFACTURER REQUIREMENTS - GAS EQUIPMENT VENTING SYSTEM PROVIDED. When the manufacturer of Product Approved side wall horizontally vented gas equipment provides a venting system design or venting system components with the equipment, the instructions provided by the manufacturer for installation of the equipment and the venting system shall include:
1. Detailed instructions for the installation of the venting system design or the venting system components; and
2. A complete parts list for the venting system design or venting system.
   a. MANUFACTURER REQUIREMENTS - GAS EQUIPMENT VENTING SYSTEM NOT PROVIDED. When the manufacturer of a Product Approved side wall horizontally vented gas fueled equipment does not provide the parts for venting the flue gases, but identifies “special venting systems”, the following requirements shall be satisfied by the manufacturer:
3. The referenced “special venting system” instructions shall be included with the appliance or equipment installation instructions; and
4. The “special venting systems” shall be Product Approved by the Board, and the instructions for that system shall include a parts list and detailed installation instructions.
   a. A copy of all installation instructions for all Product Approved side wall horizontally vented gas fueled equipment, all venting instructions, all parts lists for venting instructions, and/or all venting design instructions shall remain with the appliance or equipment at the completion of the installation.

For questions regarding these requirements, please contact the Commonwealth of Massachusetts Board of State Examiners of Plumbers and Gas Fitters, 239 Causeway Street, Boston, MA 02114. 617-727-9952.

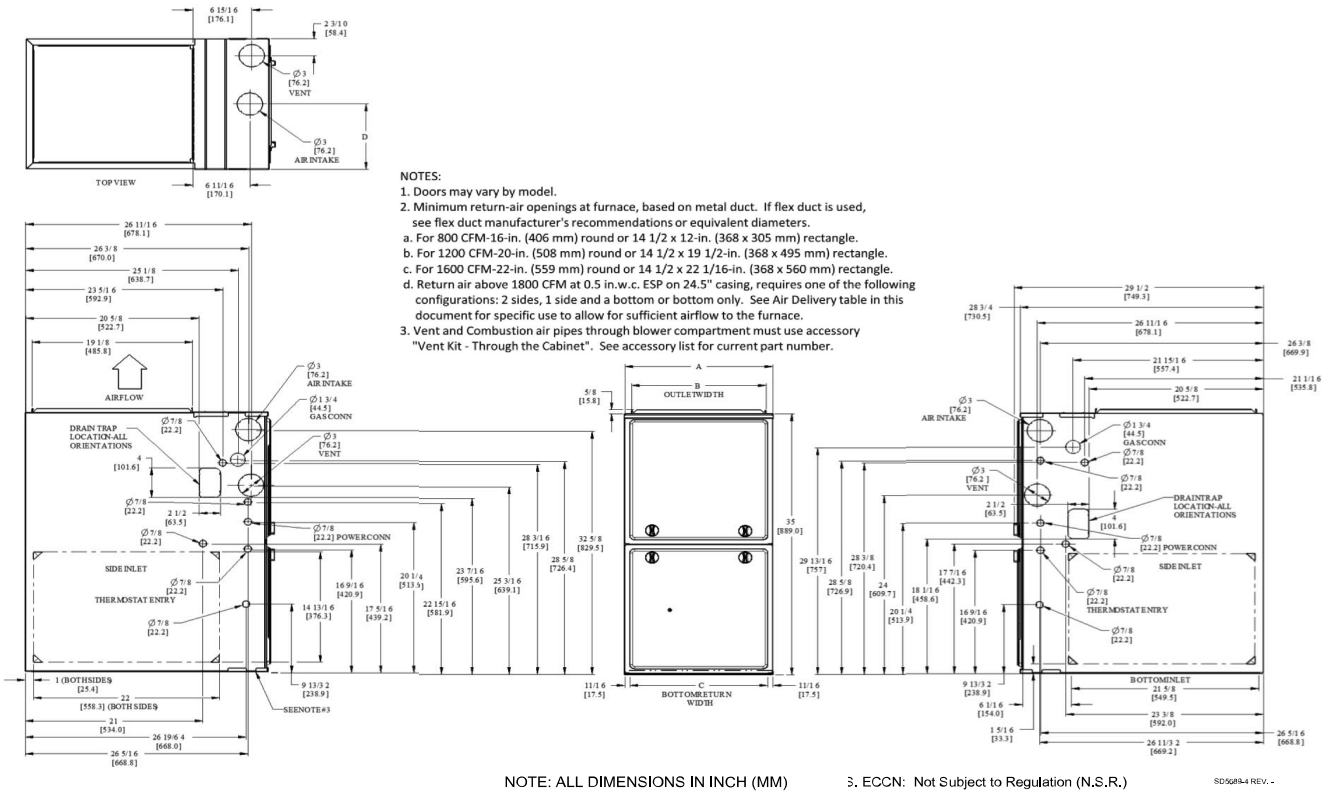

A210784

Fig. 1 – Dimensional Drawing

Table 1 – Dimension

FURNACE SIZE	A	B	C	D	SHIP WT.
	CABINET WIDTH	OUTLET WIDTH	BOTTOM INLET WIDTH	AIR INTAKE	LB (KG)
36040B	17-1/2 (445)	15-7/8 (403)	16 (406)	8-3/4 (222)	136 (62)
48060B	17-1/2 (445)	15-7/8 (403)	16 (406)	8-3/4 (222)	141 (64)
60080C	21 (533)	19-3/8 (492)	19-1/2 (495)	10-1/2 (267)	161 (73)
60100C	21 (533)	19-3/8 (492)	19-1/2 (495)	10-1/2 (267)	167 (76)

⚠ WARNING

CARBON MONOXIDE POISONING HAZARD

Failure to follow this warning could result in personal injury and/or death.

Carbon Monoxide (CO) is a colorless, odorless, and tasteless poisonous gas that can be fatal when inhaled. Follow all installation, maintenance, and service instructions. See additional information below regarding the installation of a CO Alarm.

Most states in the USA and jurisdictions in Canada have laws that require the use of Carbon Monoxide (CO) alarms with fuel burning products. Examples of fuel burning products are furnaces, boilers, space heaters, generators, water heaters, stoves/ranges, clothes dryers, fireplaces, incinerators, automobiles, and other internal combustion engines. Even if there are no laws in your jurisdiction requiring a CO Alarm, it's highly recommended that whenever any fuel burning product is used in or around the home or business that the dwelling be equipped with a CO Alarm(s). The Consumer Product Safety Commission recommends the use of CO Alarm(s). The CO Alarm(s) must be installed, operated, and maintained according to the CO Alarm manufacturer's instructions. For more information about Carbon Monoxide, local laws, or to purchase a CO Alarm online, please visit the following website. https://www.kidde.com.

SAFETY CONSIDERATIONS

⚠ WARNING

FIRE, EXPLOSION, ELECTRICAL SHOCK, AND CARBON MONOXIDE POISONING HAZARD

Failure to follow this warning could result in dangerous operation, personal injury, death, or property damage.

Improper installation, adjustment, alteration, service, maintenance, or use can cause carbon monoxide poisoning, explosion, fire, electrical shock, or other conditions which may cause personal injury or property damage. Consult a qualified service agency, local gas supplier, or your distributor or branch for information or assistance. The qualified service agency must use only factory-authorized accessories and replacement parts when installing and servicing this product.

⚠ WARNING

FIRE, EXPLOSION, ELECTRICAL SHOCK, AND CARBON MONOXIDE POINSING HAZARD

Failure to follow this warning could result in dangerous operation, personal injury, death, or property damage.

Furnaces shall NOT be twinned (i.e. tandem or staged operation) unless approved in factory technical specifications literature for the furnace. A factory authorized, field-supplied Twinning Kit MUST be used. Consult furnace pre-sale literature for specific models approved for twinning and the correct twinning kit. Twinned furnaces must be installed on both a common supply AND a common return duct system as shown in the Twinning Kit Installation Instructions. Only two furnaces can be twinned on a common supply and return duct system using a factory authorized twinning kit.

⚠ WARNING

FIRE, EXPLOSION, ELECTRICAL SHOCK, AND CARBON MONOXIDE POISONING HAZARD

Failure to follow this warning could result in dangerous operation, personal injury, death, or property damage.

Furnaces shall NOT be twinned. These furnaces are not approved for installation in recreational vehicles, outdoors or in manufactured/mobile homes.

⚠ WARNING

FIRE HAZARD

Failure to follow this warning could result in personal injury, death, or property damage.

Solvents, cements and primers are combustible. Keep away from heat, sparks and open flame. Use only in well-ventilated areas. Avoid breathing in vapor or allowing contact with skin or eyes.

⚠ CAUTION

FURNACE RELIABILITY HAZARD

Failure to follow this caution may result in unit component damage.

Application of this furnace should be indoors with special attention given to vent sizing and material, gas input rate, air temperature rise, unit leveling, and unit sizing.

⚠ WARNING

FIRE, INJURY, OR DEATH HAZARD

Failure to follow this warning could result in property damage, personal injury, or death.

Do not bypass any of the safety controls in the furnace, including but not limited to the main limit switch, rollout or burner thermal switch, and pressure switch/pressure transducer.

⚠ WARNING

PERSONAL INJURY AND PROPERTY DAMAGE HAZARD

Failure to follow this warning could result in property damage, personal injury, or death.

For continued performance, reliability, and safety, the only approved accessories and replacement parts are those specified by the equipment manufacturer. The use of non-manufacturer approved parts and accessories could invalidate the equipment limited warranty and result in fire risk, equipment malfunction, and failure. Please review manufacturer's instructions and replacement part catalogs available from your equipment supplier

Improper installation, adjustment, alteration, service, maintenance, or use can cause explosion, fire, electrical shock, or other conditions which may cause death, personal injury, or property damage. Consult a qualified installer, service agency, or your distributor or branch for information or assistance. The qualified installer or agency must use factory-authorized kits or accessories when modifying this product. Refer to the individual instructions packaged with the kits or accessories when installing.

Installing and servicing heating equipment can be hazardous due to gas and electrical components. Only trained and qualified personnel should install, repair, or service heating equipment. Untrained personnel can perform basic maintenance functions such as cleaning and replacing air filters. All other operations must be performed by trained service personnel. When working on heating equipment, observe precautions in literature, on tags, and on labels attached to or shipped with furnace and other safety precautions that may apply.

These instructions cover minimum requirements and conform to existing national standards and safety codes. In some instances, these instructions exceed certain local codes and ordinances, especially those that may not have kept up with changing residential construction practices. We require these instructions as a minimum for a safe installation.

Follow all safety codes. Wear safety glasses, protective clothing, and work gloves. Have a fire extinguisher available. Read these instructions thoroughly and follow all warnings or cautions included in literature and attached to the unit.

⚠ CAUTION

CUT HAZARD

Failure to follow this caution may result in personal injury.

Sheet metal parts may have sharp edges or burrs. Use care and wear appropriate protective clothing, safety glasses and gloves when handling parts, and servicing furnaces.

This is the safety-alert symbol ⚠. When you see this symbol on the furnace and in instructions or manuals, be alert to the potential for personal injury.

Understand the signal words DANGER, WARNING, and CAUTION. These words are used with the safety-alert symbol. DANGER identifies the most serious hazards which will result in severe personal injury or death. WARNING signifies a hazard which could result in personal injury or death. CAUTION is used to identify hazards which may result in minor personal injury or product and property damage. NOTE and NOTICE are used to highlight suggestions which will result in enhanced installation, reliability, or operation.

1. Use only with type of gas approved for this furnace. Refer to the furnace rating plate.

2. Install this furnace only in a location and position as specified in the "Location" section of these instructions.
3. Provide adequate combustion and ventilation air to the furnace space as specified in "Air for Combustion and Ventilation" section.
4. Combustion products must be discharged outdoors. Connect this furnace to an approved vent system only, as specified in the "Venting" section of these instructions.
5. Never test for gas leaks with an open flame. Use a commercially available soap solution made specifically for the detection of leaks to check all connections, as specified in the "Gas Piping" section.
6. Always install furnace to operate within the furnace's intended temperature-rise range with a duct system which has an external static pressure within the allowable range, as specified in the "Start-Up, Adjustments, and Safety Check" section. See furnace rating plate.
7. When a furnace is installed so that supply ducts carry air circulated by the furnace to areas outside the space containing the furnace, the return air shall also be handled by duct(s) sealed to the furnace casing and terminating outside the space containing the furnace. See "Air Ducts" section.
8. A gas-fired furnace for installation in a residential garage must be installed as specified in the warning box in the "Location" section.
9. The furnace is not permitted to be used for heating of buildings under construction.
10. These Upflow/Horizontal Gas-Fired Furnaces are CSA design-certified for use with natural gas (see furnace rating plate) and for installation in alcoves, attics, basements, closets, utility rooms, crawlspaces, and garages. The furnace is factory-shipped for use with natural gas and cannot be converted to propane gas.
11. For required clearances to combustible construction (Table 2). Ensure sufficient clearance for furnace condensate trap installation. See Location and Condensate Trap sections for required and recommended clearances (see Fig. 6 and Fig. 7).

Table 2 – Minimum Clearances to Combustible Materials for All Units

POSITION	CLEARANCE
REAR	1 in.
FRONT (Combustion air openings in furnace and in structure)	1 in.
Required for service	24 in.*
All Sides of Supply Plenum	1 in.
Sides	1 in. †
Vent	0
Top of Furnace	1 in.

*. Consult local building codes.
†. Additional clearance is required for condensate trap installation.

NOTE: Furnace edge contact is permissible with combustible materials unless local codes state otherwise.

12. Maintain a 1-in. (25 mm) clearance from combustible materials to supply air ductwork for a distance of 36 in. (914 mm) horizontally from the furnace. See NFPA 90B or local code for further requirements.
13. These furnaces SHALL NOT be installed directly on carpeting, combustible tile, or any other combustible material other than wood flooring. Special base is not required when this furnace is installed on manufacturer's cased evaporator coils or when manufacturer's evaporator coil casing is used. Clearance to combustible construction information (Table 2).
14. Inspect and ensure all casing opening not used for vent, gas, electrical or auxiliary are filled with knockouts or casing plugs.

⚠ NOTICE

IMPORTANT INSTALLATION AND START-UP PROCEDURES

Failure to follow this procedure may result in a nuisance smoke or odor complaint.

The manifold pressure, gas rate by meter clocking, temperature rise and operation must be checked after installation. Minor smoke and odor may be present temporarily after start-up from the manufacturing process. Some occupants are more sensitive to this minor smoke and odor. It is recommended that doors and windows be open during the first heat cycle.

⚠ WARNING

CARBON MONOXIDE POISONING HAZARD

Failure to follow this warning could result in personal injury and/or death.

Carbon Monoxide (CO) is a colorless, odorless, and tasteless poisonous gas that can be fatal when inhaled. Follow all installation, maintenance, and service instructions. See additional information below regarding the installation of a CO Alarm.

Most states in the USA and jurisdictions in Canada have laws that require the use of Carbon Monoxide (CO) alarms with fuel burning products. Examples of fuel burning products are furnaces, boilers, space heaters, generators, water heaters, stoves/ranges, clothes dryers, fireplaces, incinerators, automobiles, and other internal combustion engines. Even if there are no laws in your jurisdiction requiring a CO Alarm, it's highly recommended that whenever any fuel burning product is used in or around the home or business that the dwelling be equipped with a CO Alarm(s). The Consumer Product Safety Commission recommends the use of CO Alarm(s). The CO Alarm(s) must be installed, operated, and maintained according to the CO Alarm manufacturer's instructions. For more information about Carbon Monoxide, local laws, or to purchase a CO Alarm online, please visit the following website. https://www.kidde.com

INTRODUCTION

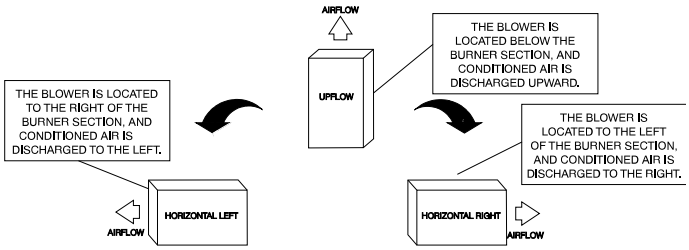

NOTE: Downflow not permitted.

Fig. 2 – Upflow/Horizontal Orientations

This Upflow/Horizontal Category IV condensing furnace is CSA design-certified as a direct-vent (2-pipe) furnace using outside air for combustion. (see Fig. 2). It is also certified as a non-direct vent (1-pipe) furnace using indoor air for combustion or air from a well-ventilated attic or crawl space, where permitted by local code.

The furnace is factory-shipped for use with natural gas only and cannot be converted to propane gas.

These furnaces are not approved for installation in recreational vehicles outdoors, or in manufactured/mobile homes. When installed on a wood floor, the furnace must be installed on a factory-supplied accessory combustible floor base or evaporator coil casing.

This furnace is designed for minimum continuous return-air temperature of 60°F (15°C) db or intermittent operation down to 55°F (13°C) db such as when used with a night setback thermostat. Return-air temperature must not exceed 80°F (27°C) db. Failure to follow these return-air temperature limits may affect reliability of heat exchangers, motors, and controls (see Fig. 3).

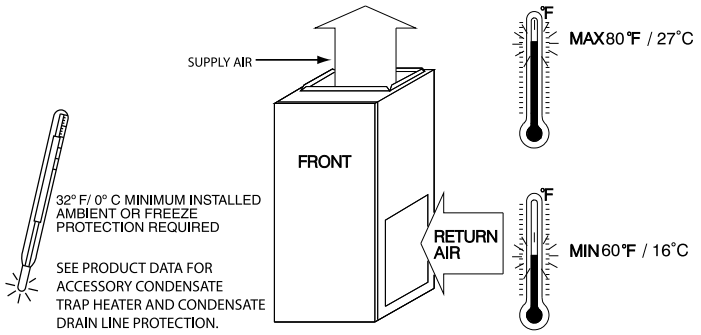

Fig. 3 – Freeze Protection and Return Air Temperature

The furnace should be sized to provide 100 percent of the design heating load requirement plus any margin that occurs because of furnace model size capacity increments. None of the furnace model sizes can be used if the heating load is less than half of the furnace model's output capacity. Use Air Conditioning Contractors of America (Manual J and S); American Society of Heating, Refrigerating, and Air-Conditioning Engineers; or other approved engineering method to calculate heating load estimates and select the furnace. Excessive oversizing of the furnace may cause the furnace and/or vent to fail prematurely, customer discomfort and/or vent freezing.

Failure to follow these guidelines is considered faulty installation and/or misapplication of the furnace; and resulting failure, damage, or repairs may impact warranty coverage.

For accessory installation details, refer to the applicable instruction literature.

NOTE: Remove all shipping materials, loose parts bags, and literature before operating the furnace (Table 3). The Ultra Low NOx condensing furnaces also contain an additional parts bag for the condensate trap, see Condensate Trap section.

Table 3 – Loose Parts Bag

DESCRIPTION	QTY
Air Intake Pipe Flange	1
Vent Pipe Flange	1
Pipe Flange Gaskets	2
Sharp Tip Screws (Vent and Inlet Flanges)	10
Vent Pipe Coupling	1
Vent Pipe Coupling Clamps	2
Gas Line Grommet	1
Junction Box Cover	1
Junction Box Base	1
Green Ground Screw	1
Blunt Tip Screws (Junction Box)	3
Thermostat Wire Grommet	1
Rubber Drain Elbow	1
Drain Tube Clamps	2
1/2-in. CPVC to 3/4-in. PVC Pipe Adapter	1

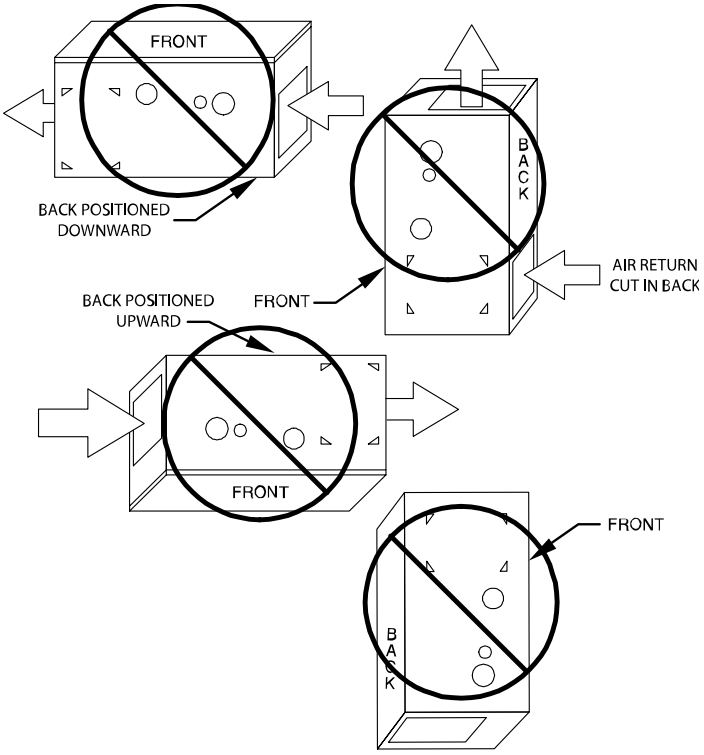

NOTE: Downflow not permitted with any return air configuration.

Fig. 4 – Prohibited Installations

WARNING

FIRE HAZARD

Failure to follow this warning could result in personal injury, death and/or property damage.

Do not install the furnace on its back or hang furnace with control compartment facing downward. Safety control operation will be adversely affected. Never connect return-air ducts to the back of the furnace (see Fig. 4).

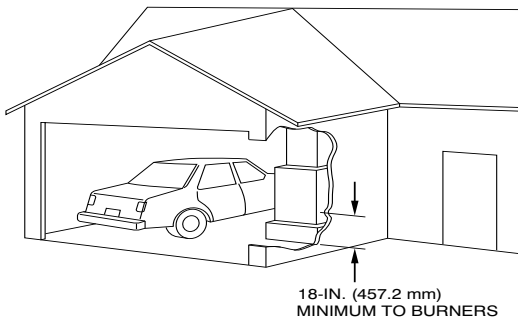

Fig. 5 – Installation in a Garage

CODES AND STANDARDS

Follow all national and local codes and standards in addition to these instructions. The installation must comply with regulations of the serving gas supplier, local building, heating, plumbing, and other codes. In absence of local codes, the installation must comply with the national codes listed below and all authorities having jurisdiction.

In the United States, follow all codes and standards for the following:

Safety

- Current edition of US: National Fuel Gas Code NFPA 54/ANSI Z223.1 and the Installation Standards, Warm Air Heating and Air Conditioning Systems ANSI/NFPA 90B

General Installation

- US: NFPA 54/ANSI Z223.1 and the NFPA 90B. For copies, contact the National Fire Protection Association Inc., Batterymarch Park, Quincy, MA 02269; or for only the NFPA 54/ANSI Z223.1 contact the American Gas Association, 400 N. Capitol, N.W., Washington DC 20001

Combustion and Ventilation Air

- US: Current edition of Section 9.3 of the NFPA54/ANSI Z223.1 Air for Combustion and Ventilation

Duct Systems

- US: Current edition of Air Conditioning Contractors Association (ACCA) Manual D, Sheet Metal and Air Conditioning Contractors National Association (SMACNA), or American Society of Heating, Refrigeration, and Air Conditioning Engineers (ASHRAE) Fundamentals Handbook Chapter 35

Acoustical Lining and Fibrous Glass Duct

- US: Current edition of SMACNA, NFPA 90B as tested by UL Standard 181 for Class I Rigid Air Ducts

Gas Piping and Gas Pipe Pressure Testing

- US: Current edition of NFPA 54/ANSI Z223.1; Chapters 5, 6, 7, and 8 and national plumbing codes.

In the state of Massachusetts:

- This product must be installed by a licensed plumber or gas fitter.
- When flexible connectors are used, the maximum length shall not exceed 36 in. (914 mm).
- When lever type gas shutoffs are used they shall be T-handle type.
- The use of copper tubing for gas piping is not approved by the state of Massachusetts.

Electrical Connections

- US: Current edition of National Electrical Code (NEC) NFPA 70

Condensate Drain Connection

- US: Current edition of National Standard Plumbing Code, Section 8.7.

ELECTROSTATIC DISCHARGE (ESD) PRECAUTIONS PROCEDURE

⚠ CAUTION

FURNACE RELIABILITY HAZARD

Failure to follow this caution may result in unit component damage.

Electrostatic discharge can affect electronic components. Take precautions during furnace installation and servicing to protect the furnace electronic control. Precautions will prevent electrostatic discharges from personnel and hand tools which are held during the procedure. These precautions will help to avoid exposing the control to electrostatic discharge by putting the furnace, the control, and the person at the same electrostatic potential.

1. Disconnect all power to the furnace. Multiple disconnects may be required. DO NOT TOUCH THE CONTROL OR ANY WIRE CONNECTED TO THE CONTROL PRIOR TO DISCHARGING YOUR BODY'S ELECTROSTATIC CHARGE TO GROUND.
2. Firmly touch the clean, unpainted, metal surface of the furnace chassis which is close to the control. Tools held in a person's hand during grounding will be satisfactorily discharged.
3. After touching the chassis, you may proceed to service the control or connecting wires as long as you do nothing to recharge your body with static electricity (for example; DO NOT move or shuffle your feet, do not touch ungrounded objects, etc.).
4. If you touch ungrounded objects (and recharge your body with static electricity), firmly touch a clean, unpainted metal surface of the furnace again before touching control or wires.
5. Use this procedure for installed and uninstalled (ungrounded) furnaces.
6. Before removing a new control from its container, discharge your body's electrostatic charge to ground to protect the control from damage. If the control is to be installed in a furnace, follow items 1 through 4 before bringing the control or yourself in contact with the furnace. Put all used and new controls into containers before touching ungrounded objects.
7. An ESD service kit (available from commercial sources) may also be used to prevent ESD damage.

Accessories

See Product Data Sheet for a list of accessories for this product.

LOCATION

⚠ CAUTION

PERSONAL RELIABILITY HAZARD

Failure to follow this caution may result in unit component damage.

Furnace may not be used for heating buildings under construction.

IMPORTANT: Clearances for Condensate Trap. Before locating furnace, refer to condensate trap installation instructions section for required clearances for trap installation.

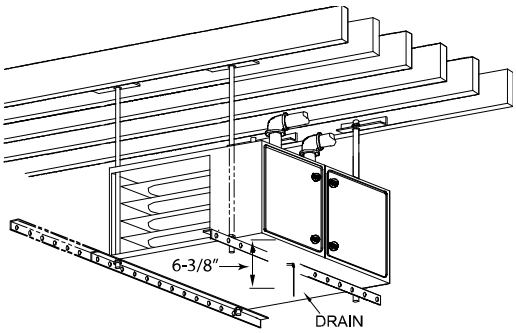

ADDITIONAL 1" CLEARANCE BELOW TRAP RECOMMENDED FOR SERVICE

A200083

Fig. 6 – Trap Clearance in Horizontal Application

NOTE: Local codes may require a drain pan and condensate tray when a condensing furnace is installed over a finished ceiling.

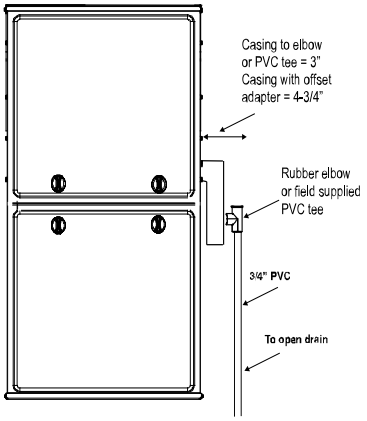

A200084

Fig. 7 – Trap Clearance in Upflow Application

General

These furnaces are shipped with materials to assist in proper furnace installation. These materials are shipped in the main blower compartment.

Loose parts bag contents (Table 3).

This furnace must:

- be installed so the electrical components are protected from water.
- not be installed directly on any combustible material other than wood flooring (refer to SAFETY CONSIDERATIONS).
- be located close to the chimney or vent and attached to an air distribution system. Refer to Air Ducts section.
- be provided ample space for servicing and cleaning. Always comply with minimum fire protection clearances (Table 2).

⚠ WARNING

CARBON MONOXIDE POISONING / COMPONENT DAMAGE HAZARD

Failure to follow this warning could result in personal injury or death and unit component damage.

Corrosive or contaminated air may cause failure of parts containing flue gas, which could leak into the living space. Air for combustion must not be contaminated by halogen compounds, which include fluoride, chloride, bromide, and iodide. These elements can corrode heat exchangers and shorten furnace life. Air contaminants are found in aerosol sprays, detergents, bleaches, cleaning solvents, salts, air fresheners, and other household products. Do not install furnace in a corrosive or contaminated atmosphere. Make sure all combustion and circulating air requirements are met, in addition to all local codes and ordinances.

The following types of furnace installations may require OUTDOOR AIR for combustion due to chemical exposures:

- Commercial buildings
- Buildings with indoor pools
- Laundry rooms
- Hobby or craft rooms
- Chemical storage areas

If air is exposed to the following substances, it should not be used for combustion air, and outdoor air may be required for combustion:

- Permanent wave solutions
- Chlorinated waxes and cleaners
- Chlorine based swimming pool chemicals
- Water softening chemicals
- De-icing salts or chemicals
- Carbon tetrachloride
- Halogen type refrigerants
- Cleaning solvents (such as perchloroethylene)
- Printing inks, paint removers, varnishes, etc.
- Hydrochloric acid
- Cements and glues
- Antistatic fabric softeners for clothes dryers
- Masonry acid washing materials

All fuel-burning equipment must be supplied with air for fuel combustion. Sufficient air must be provided to avoid negative pressure in the equipment room or space. A positive seal must be made between the furnace cabinet and the return-air duct to prevent pulling air from the burner area.

⚠ WARNING

FIRE, INJURY OR DEATH HAZARD

Failure to follow this warning could result in personal injury, death and/or property damage.

When the furnace is installed in a residential garage, the burners and burner ignition devices must be located at least 18 in. (457 mm) above the floor. The furnace must be located or protected to avoid damage by vehicles. When the furnace is installed in a public garage, airplane hangar, or other building having a hazardous atmosphere, the furnace must be installed in accordance with the current edition of NFPA 54/ANSI Z223.1 or CAN/CSA B149.2 (see Fig. 5).

Location Relative to Cooling Equipment

The cooling coil must be installed parallel with, or on the downstream side of the unit to avoid condensation in the heat exchangers. When installed parallel with the furnace, dampers or other flow control must prevent chilled air from entering the furnace. If the dampers are manually operated, they must be equipped with means to prevent operation of either unit unless the damper is in the full-heat or full-cool position. Refer to Installation of Evaporator Coil section for install requirements for unshielded coils (Table 7).

AIR FOR COMBUSTION AND VENTILATION

Introduction

2-pipe Applications

When the furnace is installed as a 2-pipe furnace, no special provisions for air for combustion are required. However, other gas appliances installed in the space with the furnace may require outside air for combustion. Follow the guidelines below to ensure that other gas appliances have sufficient air for combustion.

1-pipe Applications

When the furnace is installed as a 1-pipe furnace, it will be necessary to ensure there is adequate air for combustion. Other gas appliances installed with the furnace may also require air for combustion and ventilation in addition to the amount of combustion air and ventilation air required for the furnace. Follow the guidelines below to ensure that the furnace and other gas appliances have sufficient air for combustion.

Ventilated Combustion Air Applications (for U.S. Only)

When the furnace is installed using the ventilated combustion air option, the attic or crawlspace must freely communicate with the outdoor to provide sufficient air for combustion. The combustion air pipe cannot be terminated in attics or crawlspaces that use ventilation fans designed to operate during the heating season. If ventilation fans are present in these areas, the combustion air pipe must terminate outdoors as a 2-Pipe system.

All air for combustion is piped directly to the furnace from a space that is well ventilated with outdoor air (such as an attic, crawl space or equipment closet) and the space is well isolated from the living space or

garage. In addition, other gas appliances installed in the space with the furnace may require outside air for combustion. Follow the guidelines below to ensure that the roof or crawlspace walls have sufficient free area to provide sufficient air for combustion and ventilation for the furnaces. The guidelines below can be used to ensure that other gas appliances have sufficient air for combustion.

Provisions for adequate combustion, ventilation, and dilution air must be provided in accordance with:

- U.S.A. Installations: Current edition of Section 9.3 of the NFPA 54/ANSI Z223.1, Air for Combustion and Ventilation and applicable provisions of the local building codes.

⚠ CAUTION

FURNACE CORROSION HAZARD

Failure to follow this caution may result in furnace damage.

Air for combustion must not be contaminated by halogen compounds, which include fluoride, chloride, bromide, and iodide. These elements can corrode heat exchangers and shorten furnace life. Air contaminants are found in aerosol sprays, detergents, bleaches, cleaning solvents, salts, air fresheners, and other household products.

⚠ WARNING

CARBON MONOXIDE POISONING HAZARD

Failure to follow this warning could result in personal injury or death.

The operation of exhaust fans, kitchen ventilation fans, clothes dryers, attic exhaust fans or fireplaces could create a NEGATIVE PRESSURE CONDITION at the furnace. Make-up air MUST be provided for the ventilation devices, in addition to that required by the furnace. Refer to the Carbon Monoxide Poisoning Hazard warning in the venting section of these instructions to determine if an adequate amount of make-up air is available.

The requirements for combustion and ventilation air depend upon whether or not the furnace is located in a space having a volume of at least 50 cubic feet per 1,000 BTUh input rating for all gas appliances installed in the space.

- Spaces having less than 50 cubic feet per 1,000 BTUh (4.8 cubic meters per kW) require the Outdoor Combustion Air Method.
- Spaces having at least 50 cubic feet per 1,000 BTUh (4.8 cubic meters per kW) may use the Indoor Combustion Air, Standard or Known Air Infiltration Method.

Outdoor Combustion Air Method

1. Provide the space with sufficient air for proper combustion, ventilation, and dilution of flue gases using permanent horizontal or vertical duct(s) or opening(s) directly communicating with the outdoors or spaces that freely communicate with the outdoors.
2. Provide TWO OUTDOOR OPENINGS, one inlet and one outlet combustion and ventilation air opening, to the outdoors (see Fig. 8).
   a. One opening MUST commence within 12 in. (300 mm) of the ceiling and the second opening MUST commence within 12 in. (300 mm) of the floor.
   b. Size openings and ducts (see Fig. 8 and Table 4).
   c. TWO HORIZONTAL DUCTS require 1 sq. in. (645 sq. mm) of free area per 2,000 BTUh (1,100 mm2/kW) of combined input for all gas appliances in the space (see Fig. 8 and Table 4).
   d. TWO OPENINGS OR VERTICAL DUCTS require 1 sq. in. (645 sq. mm) of free area per 4,000 BTUh (550 mm2/kW) for combined input of all gas appliances in the space (see Fig. 8 and Table 4).
3. ONE OUTDOOR OPENING requires:
   a. 1 sq. in. (645 sq. mm) of free area per 3,000 BTUh (734 mm2/kW) for combined input of all gas appliances in the space (see Fig. 8 and Table 4).
   b. Not less than the sum of the areas of all vent connectors in the space.

The opening shall commence within 12 in. (300 mm) of the ceiling. Appliances in the space shall have clearances of at least 1 in. (25 mm) from the sides and back and 6 in. (150 mm) from the front. The opening shall directly communicate with the outdoors or shall communicate through a vertical or horizontal duct to the outdoors or spaces (crawl or attic) that freely communicate with the outdoors.

Indoor Combustion Air© NFPA & AGA Standard and Known-Air-Infiltration Rate Methods

Indoor air is permitted for combustion, ventilation, and dilution, if the Standard or Known-Air-Infiltration Method is used.

⚠ WARNING

CARBON MONOXIDE POISONING HAZARD

Failure to follow this warning could result in personal injury or death.

Many homes require air to be supplied from outdoors for furnace combustion, ventilation, and dilution of flue gases.

The furnace combustion air supply must be provided in accordance with this instruction manual.

Standard Method

1. The space has no less volume than 50 cubic feet per 1,000 BTUh of the maximum input ratings for all gas appliances installed in the space and
2. The air infiltration rate is not known to be less than 0.40 air changes per hour (ACH).

The Known Air Infiltration Rate Method shall be used, if the infiltration rate is known to be:

1. Less than 0.40 ACH and
2. Equal to or greater than 0.10 ACH

Infiltration rates greater than 0.60 ACH shall not be used. The minimum required volume of the space varies with the number of ACH and shall be determined (Table 5) or Equations 1 and 2. Determine the minimum required volume for each appliance in the space and add the volumes together to get the total minimum required volume for the space.

Table 5 - Minimum Space Volumes were determined by using the following equations from the current edition of the National Fuel Gas Code ANSI Z223.1/NFPA 54, 9.3.2.2:

1. For other than fan-assisted appliances, such as a draft hood-equipped water heater:

$$\text{Volume}_{\text{Other}} = \frac{21\,\text{ft}^3}{\text{ACH}}\left(\frac{I_{\text{other}}}{1000\ \text{Btu/hr}}\right)$$

A04002

2. For fan-assisted appliances such as this furnace:

$$\text{Volume}_{\text{Fan}} = \frac{15\,\text{ft}^3}{\text{ACH}}\left(\frac{I_{\text{fan}}}{1000\ \text{Btu/hr}}\right)$$

A04003

If: I_{other} = combined input of all other than fan-assisted appliances in BTUh/hr

I_{fan} = combined input of all fan-assisted appliances in BTUh/hr

ACH = air changes per hour (ACH shall not exceed 0.60.)

The following requirements apply to the Standard Method and to the Known Air Infiltration Rate Method.

1. Adjoining rooms can be considered part of a space if:
   a. There are no closeable doors between rooms.

b. Combining spaces on same floor level. Each opening shall have free area of at least 1 in.2/1,000 BTUh (2,000 mm2/kW) of the total input rating of all gas appliances in the space, but not less than 100 in.2 (0.06 m2). One opening shall commence within 12 in. (300 mm) of the ceiling and the second opening shall commence within 12 in. (300 mm) of the floor. The minimum dimension of air openings shall be at least 3 in. (80 mm). (see Fig. 9)

c. Combining space on different floor levels. The volumes of spaces on different floor levels shall be considered as communicating spaces if connected by one or more permanent openings in doors or floors having free area of at least 2 in.2/1,000 BTUh (4,400 mm2/kW) of total input rating of all gas appliances.

2. An attic or crawlspace may be considered a space that freely communicates with the outdoors provided there are adequate permanent ventilation openings directly to outdoors having free area of at least 1-in.2/4,000 BTUh of total input rating for all gas appliances in the space.
3. In spaces that use the Indoor Combustion Air Method, infiltration should be adequate to provide air for combustion, permanent ventilation and dilution of flue gases. However, in buildings with unusually tight construction, additional air MUST be provided using the methods described in the Outdoor Combustion Air Method section.
4. Unusually tight construction is defined as Construction with:
   a. Walls and ceilings exposed to the outdoors have a continuous, sealed vapor barrier. Openings are gasketed or sealed and
   b. Doors and openable windows are weatherstripped and
   c. Other openings are caulked or sealed. These include joints around window and door frames, between sole plates and floors, between wall-ceiling joints, between wall panels, at penetrations for plumbing, electrical and gas lines, etc.

Combination of Indoor and Outdoor Air

1. Indoor openings shall comply with the Indoor Combustion Air Method below and,
2. Outdoor openings shall be located as required in the Outdoor Combustion Air Method mentioned previously and,
3. Outdoor openings shall be sized as follows:
   a. Calculate the Ratio of all Indoor Space volume divided by required volume for Indoor Combustion Air Method below.
   b. Outdoor opening size reduction Factor is 1 minus the Ratio in a. above.
   c. Minimum size of Outdoor openings shall be the size required in Outdoor Combustion Air Method above multiplied by reduction Factor in b. above. The minimum dimension of air openings shall be not less than 3 in. (80 mm).

Table 4 – Minimum Free Area Required for Each Combustion Air Opening or Duct to Outdoors

FURNACE INPUT (BTUH)	TWO HORIZONTAL DUCTS (1 SQ. IN./2,000 BTUH) (1,100 SQ. MM/KW)		SINGLE DUCT OR OPENING (1 SQ. IN./3,000 BTUH) (734 SQ. MM/KW)		TWO OPENINGS OR VERTICAL DUCTS (1 SQ. IN./4,000 BTUH) (550 SQ. MM/KW)	
	Free Area of Opening and Duct Sq. In (Sq. mm)	Round Duct In. (mm) Dia	Free Area of Opening and Duct Sq. In (Sq. mm)	Round Duct In. (mm) Dia	Free Area of Opening and Duct Sq. In (mm)	Round Duct In. (mm) Dia.
40,000	20 (12904)	5 (127)	14 (8696)	5 (127)	10 (6452)	4 (102)
60,000	30 (19355)	6 (152)	20 (13043)	5 (127)	15 (9678)	5 (127)
80,000	40 (25807)	7 (178)	27 (17391)	6 (152)	20 (12904)	5 (127)
100,000	50 (32258)	8 (203)	34 (21739)	7 (178)	25 (16130)	6 (152)

EXAMPLES: Determining Free Area

FURNACE		WATER HEATER		TOTAL INPUT		
60,000	+	40,000	=	(100,000 divided by 3,000)	=	33.3 Sq. In. for each Single Duct or Opening
80,000	+	30,000	=	(110,000 divided by 2,000)	=	55.0 Sq. In. for each two Horizontal Ducts
100,000	+	30,000	=	(130,000 divided by 4,000)	=	32.5 Sq. In. for each two Vertical Ducts or Openings

Table 5 – Minimum Space Volumes for 100% Combustion, Ventilation and Dilution Air from Outdoors

AIR CHANGES PER HOUR (ACH)	OTHER THAN FAN-ASSISTED TOTAL (1,000'S BTUH GAS INPUT RATE)			FAN-ASSISTED TOTAL (1,000'S BTUH GAS INPUT RATE)						
	30	40	50	26	40	60	80	100	120	140
	Space Volume Ft3 (M3)									
0.60	1,050 (29.7)	1,400 (39.6)	1,750 (49.5)	910 (25.8)	1,400 (39.6)	1,500 (42.5)	2,000 (56.6)	2,500 (70.8)	3,000 (84.9)	3,500 (99.1)
0.50	1,260 (35.6)	1,680 (47.5)	2,100 (59.4)	1092 (30.9)	1,680 (47.5)	1,800 (51.0)	2,400 (67.9)	3,000 (84.9)	3,600 (101.9)	4,200 (118.9)
0.40	1,575 (44.5)	2,100 (59.4)	2,625 (74.3)	1365 (38.7)	2,100 (59.4)	2,250 (63.7)	3,000 (84.9)	3,750 (106.1)	4,500 (127.3)	5,250 (148.6)
0.30	2,100 (59.4)	2,800 (79.2)	3,500 (99.1)	1820 (51.5)	2,800 (79.2)	3,000 (84.9)	4,000 (113.2)	5,000 (141.5)	6,000 (169.8)	7,000 (198.1)
0.20	3,150 (89.1)	4,200 (118.9)	5,250 (148.6)	2730 (77.3)	4,200 (118.9)	4,500 (127.3)	6,000 (169.8)	7,500 (212.2)	9,000 (254.6)	10,500 (297.1)
0.10	6,300 (178.0)	8,400 (237.8)	10,500 (297.3)	5460 (154.6)	8,400 (237.8)	9,000 (254.6)	12,000 (339.5)	15,000 (424.4)	18,000 (509.2)	21,000 (594.1)
0.00	NP	NP	NP	NP	NP	NP	NP	NP	NP	NP

NP = Not Permitted

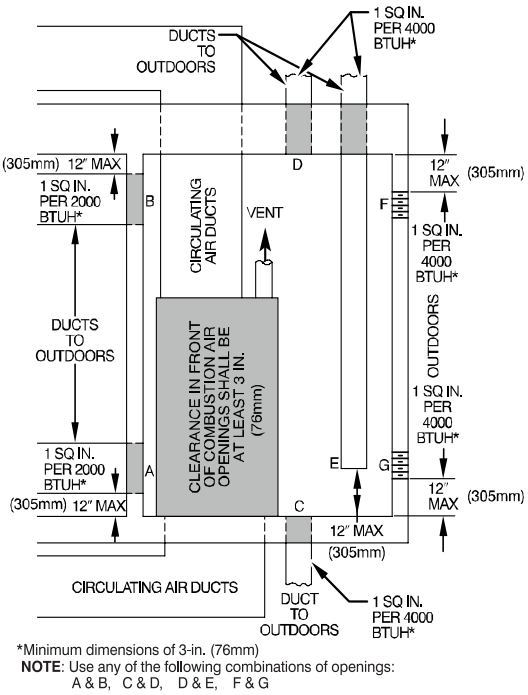

L12F012

Fig. 8 – Air for Combustion, Ventilation, and Dilution for Outdoors

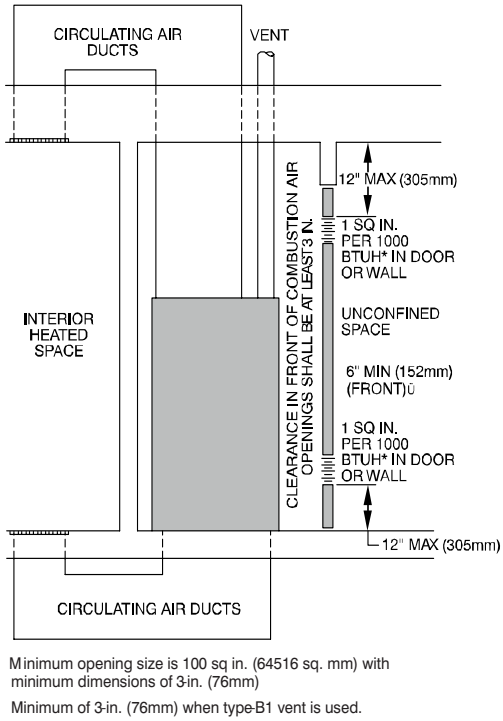

L12F013

Fig. 9 – Air for Combustion, Ventilation, and Dilution from Indoors

CONDENSATE TRAP

Condensate Trap

The condensate trap is a field installed trap. A bag of loose parts needed to install the trap is provided with the furnace. How to install the trap is shown in the Installation section of this manual. Only use the trap provided with the furnace.

⚠ WARNING

CARBON MONOXIDE POISONING AND PROPERTY DAMAGE HAZARD

Failure to follow this warning could result in property damage, personal injury or death.

The condensate trap provided with furnace must be installed per the furnace installation instructions. Do not modify the trap or substitute a different trap.

⚠ NOTICE

The condensate trap extends below the underside of the casing in the horizontal position. A minimum of 6⅜-in. of physical clearance is required and 1-in. of additional clearance is recommended between the casing side and the furnace platform for the trap to extend out of the casing in the horizontal position. Allow at least 1/4-in. per foot of slope down.

Condensate Drain Connections

⚠ CAUTION

FROZEN AND BURST WATER PIPE HAZARD

Failure to protect against the risk of freezing may result in property damage.

Special precautions MUST be made if installing furnace in an area which may drop below freezing. This can cause improper operation or damage to equipment. If furnace environment has the potential of freezing, the drain trap and drain line must be protected. The use of accessory electric heat tape and/or RV antifreeze is required for these installations.

⚠ CAUTION

PROPERTY DAMAGE HAZARD

Failure to follow this caution may result in burst water pipes and/or property damage.

If a condensate pump is installed, a plugged condensate drain or a failed pump may cause the furnace to shut down. Do not leave the home unattended during freezing weather without turning off water supply and draining water pipes or otherwise protecting against the risk of frozen pipes.

DO NOT trap condensate water in the drain line in any other location than at the condensate drain trap supplied with the furnace. If possible, DO NOT route the drain line where it may freeze. The drain line must terminate at an inside drain to prevent freezing of the condensate and possible property damage.

Special precautions MUST be made if installing furnace in an area which may drop below 32°F (0°C). This can cause improper operation or damage to the equipment. If the furnace environment has the potential of freezing, the drain trap and drain line must be protected. In areas where the temperature may be below 32°F (0°C), a Condensate Freeze Protection heat tape kit is strongly recommended. Refer to the Accessory section of the Product Data Sheet for current kit number. A self-regulating, shielded and waterproof heat tape rated at 3 to 6 watt per foot (10 to 20 watt per meter) at 115 volt, 40°F (4°C) may be used to provide freeze protection of the remaining condensate drain line. Wrap the drain trap and drain line with the heat tape and secure with

appropriate plastic ties. Follow the heat tape manufacturer's recommendations. Prime the trap before furnace operation.

The condensate drain line must be supported and/or secured per local codes. Supports and clamps should be spaced to prevent the drain line from sagging or being dislocated from the furnace or termination point. In the absence of local codes, consult the current edition of the National Standard Plumbing Code, in the U.S.

An indoor coil condensate drain or humidifier drain can be connected to the external furnace condensate drain provided:

- The drains are not hard piped together, and
- There is an air gap at the point where the two drain lines meet or
- All condensate piping is at least 3/4" PVC and there is a relief tee at the top of condensate drain piping as shown (see Fig. 11).

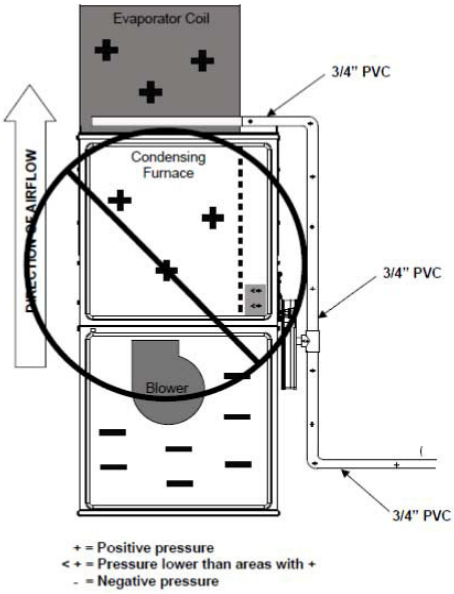

A200069

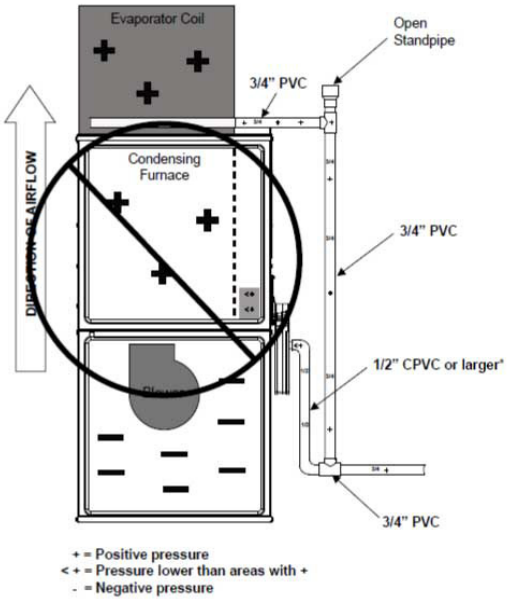

A200070

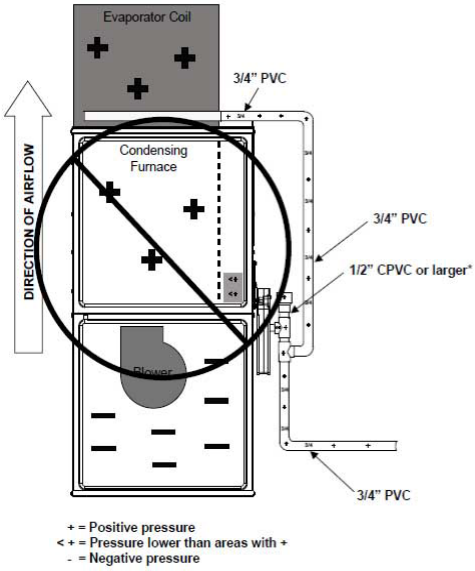

A200071

Fig. 10 – Example of Field Drain Attachment (Not Allowed)

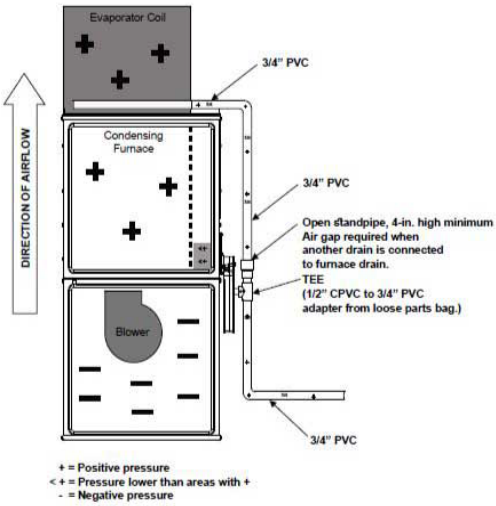

A200072

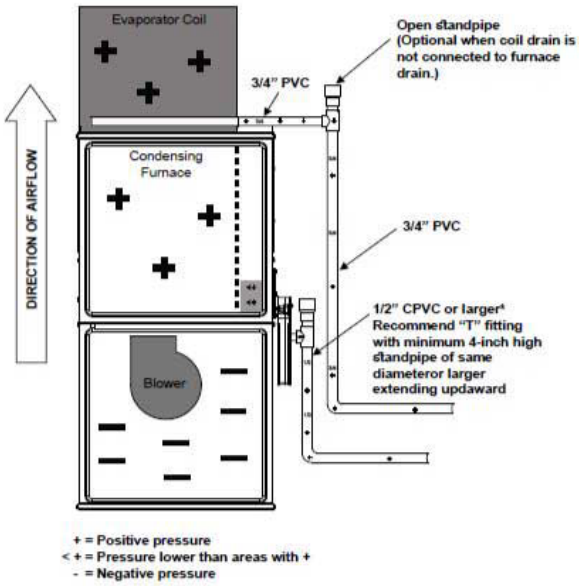

A200073

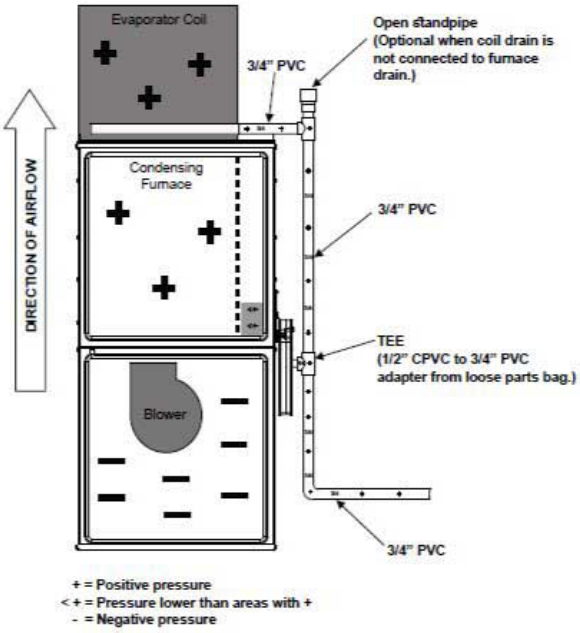

A200074

NOTE: Coil may require metal spacer or shield between furnace and coil. See coil install requirements (Table 7).

Fig. 11 – Example of Field Drain Attachment

Table 6 – Condensate Trap Configurations

Part	Installation Configuration		
	Horizontal	Upflow	Upflow Offset
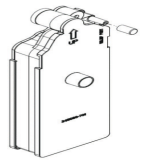 A200090 **Main Trap**	Required	Required	Required
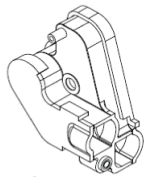 A200091 **Adapter**	Not Required	Required	Required
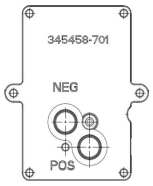 A200092 **Plate**	Not Required	Required	Required
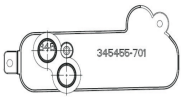 A200093 **Offset Adapter**	Not Required	Not Required	Required (accessory kit purchased separately)

⚠ NOTICE

Upflow installations utilizing the right side air return opening should follow the Upflow Specific Steps - Offset Installation to ensure the full opening is available for return ductwork.

INSTALLATION

Preparing the Furnace – Before Setting in Place

1. Remove appropriate knockout or plug based off the installation orientation.

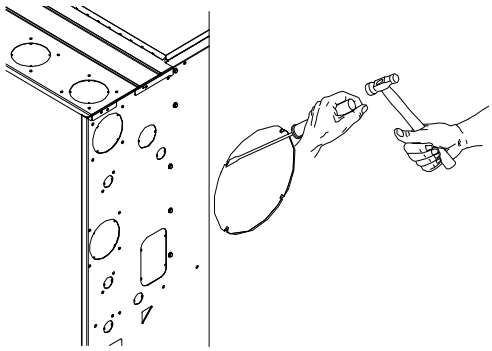

L12F019B

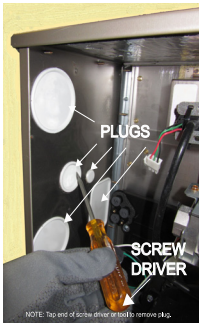

A230035

NOTE: Locate the plug that needs to be removed. Using a screw driver or tool, place end against rim on plug. Tap on the butt end of screwdriver or other tool to remove plug.

⚠ CAUTION

CUT HAZARD

Failure to follow this caution may result in personal injury.

Sheet metal parts may have sharp edges or burrs. Use care and wear appropriate protective clothing, safety glasses and gloves when handling parts, and servicing furnaces.

Fig. 12 – Knockout Removal or Plug Removal

2. Remove two of the factory-installed drain plugs from collector box. Orientation specific drain plugs (see Fig. 13).
3. Check that all pre-installed gaskets on trap components are present, adhered, and undamaged.

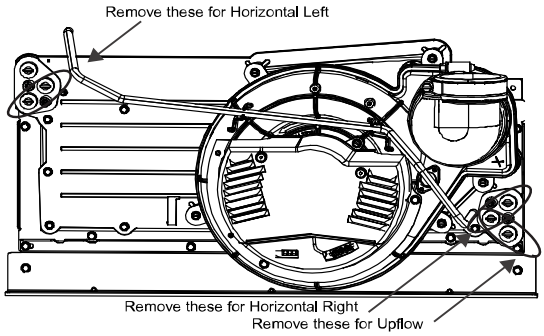

A200075

Fig. 13 – Drain Plugs

⚠ WARNING

CARBON MONOXIDE POISONING HAZARD

Failure to follow this warning could result in property damage, personal injury or death.

Missing or damaged gaskets on trap components may result in flue gas leakage and water leakage.

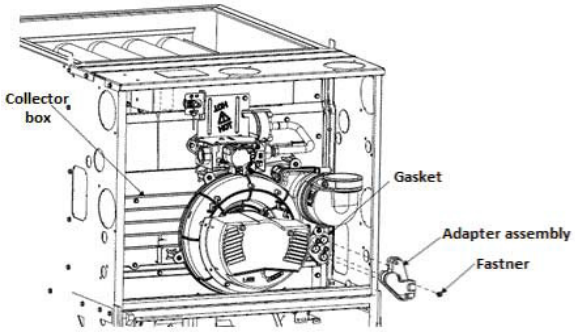

A200076

Fig. 14 – Upflow Example of Trap Adapter Installation

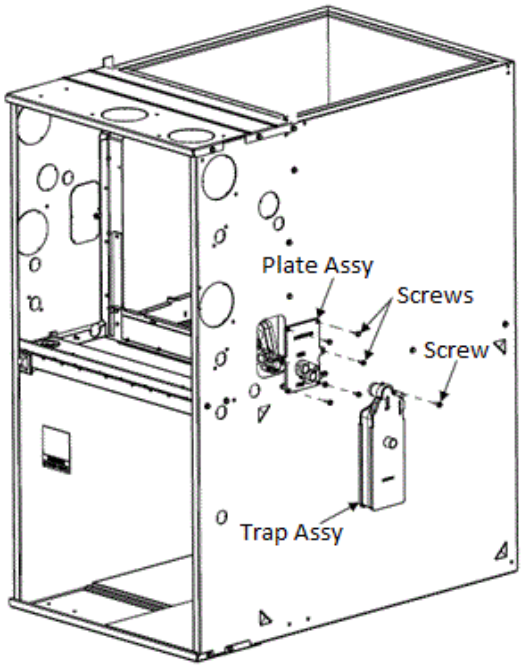

A200064

Fig. 15 – Upflow Condensate Drain

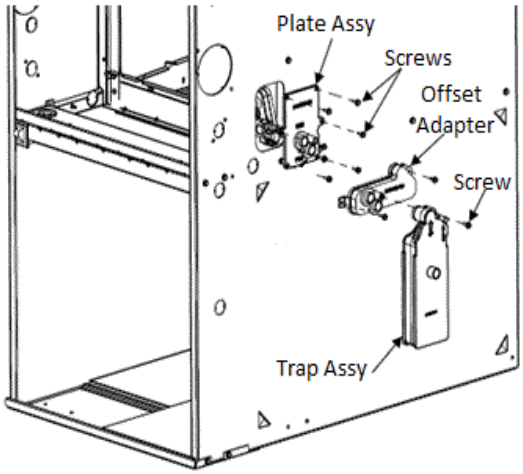

A200065

Fig. 16 – Upflow - Offset of Condensate Drain

⚠ NOTICE

Upflow installations utilizing the right side air return opening should follow the Upflow Specific Steps - Offset Installation to ensure the full opening is available for return ductwork.

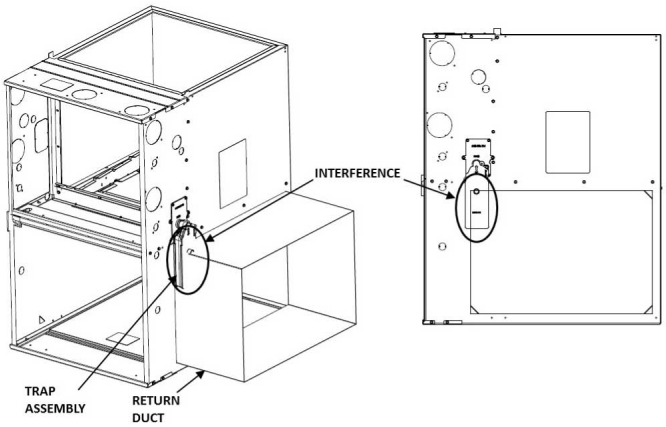

A200119

Fig. 17 – Upflow Right Side Return Configuration - Trap Interference

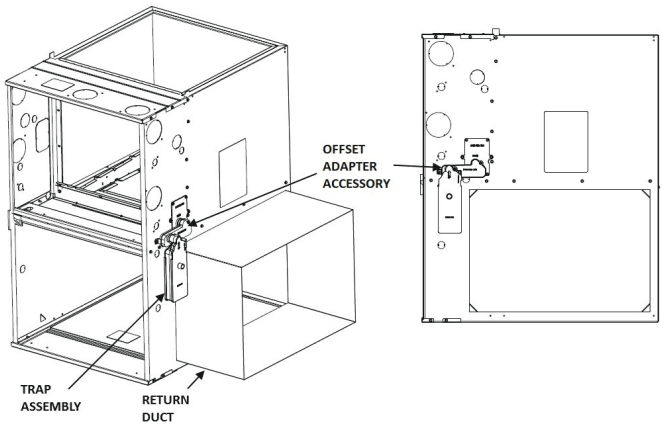

A200120

Fig. 18 – Upflow Right Side Return Configuration - Required Upflow Offset Installation

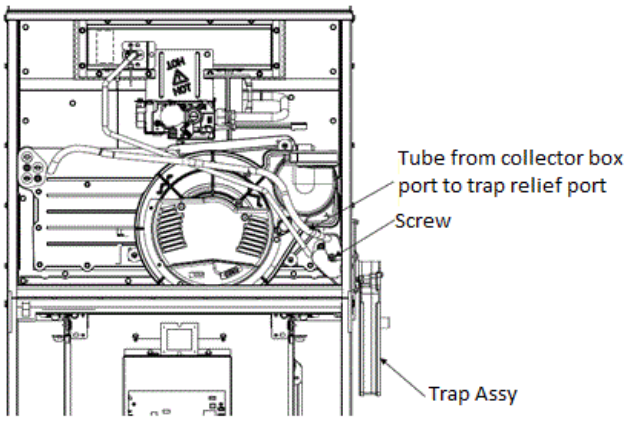

A200077

Fig. 19 – Example of Tube Connection

Upflow Specific Steps – Standard Installation

1. Install trap adapter to the collector box using provided 5/8" (16 mm) machine screw (see Fig. 14).
2. Screw the adapter plate to the trap adapter using provided machine screw (see Fig. 15).
3. Screw the adapter plate to the side of casing using six (6) of the provided sheet metal screws (see Fig. 15). Drilling pilot holes is recommended to better align the plate with the rectangle opening.
4. Screw the trap to the adapter plate using provided machine screw (see Fig. 15).
5. Remove factory-installed collector box cap. Run tube from port on upper left of the collector box to the relief port on the trap adapter (see Fig. 19). If the tube is too long, cut any extra length from the tube.

Upflow Specific Steps – Offset Installation

1. Trap Offset Adapter Accessory Kit (purchased separately) is required. Instead of installing the trap to the adapter plate, screw the trap offset adapter to the adapter plate (see Fig. 16).
2. Screw the trap to the trap offset adapter (see Fig. 16).
3. Screw the trap adapter plate to the casing using the supplied sheet metal screw (see Fig. 16).
4. Remove factory-installed collector box cap. Run tube from port on upper left of the collector box to the relief port on the trap adapter (Fig 19). If the tube is too long, cut any extra length from the tube.

Horizontal Specific Steps

1. Accessory Horizontal Installation Kit (trap grommet) is required for all direct-vent horizontal installations (only). The kit contains a rubber casing grommet designed to seal between the furnace casing and the condensate trap. (see Fig. 20).

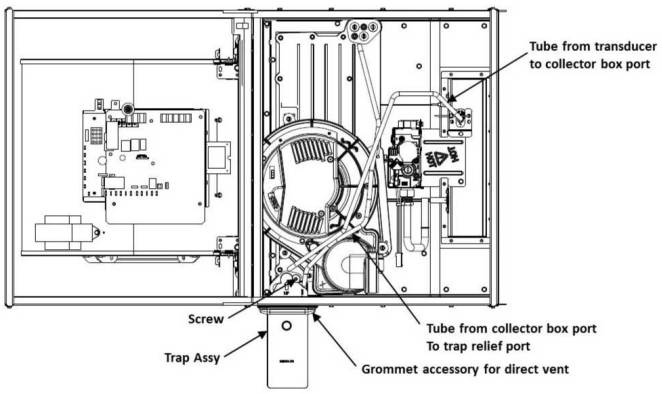

A200067

Fig. 20 – Horizontal Right - Trap Assembly Aid

2. Install the grommet in the casing when required for direct-vent horizontal applications.
3. Allow for 6-3/8" (162 mm) of clearance underneath the furnace for the condensate trap and drain line. It is recommended to leave an additional 1" clearance under the trap for service (see Fig. 21).
4. Remove appropriate collector box drain plug (see Fig. 13).
5. Attach trap to collector box using provided 3/8" (9.5 mm) machine screw (Fig. 20).

⚠ NOTICE

POSSIBLE DAMAGE TO COLLECTOR BOX

Must use 3/8" (9.5 mm) machine screw. Using longer provided screw will not properly seat the trap or may damage the collector box.

6. For horizontal right side down:
   a. Remove factory-installed collector box cap.
   b. Remove the factory-installed cap from the relief port on the trap and run tube from port on the collector box corner opposite of the trap to the relief port on the trap (see Fig. 20). If the tube is too long, cut any extra length from the tube. In the installed position, the transducer tubing should be in the lower pressure port and the relief tubing should be in the higher port.

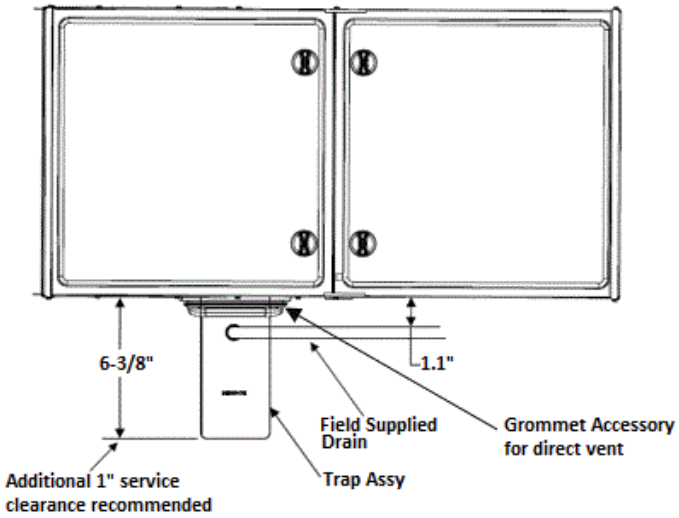

A200066

Fig. 21 – Trap Clearance in Horizontal Application (Note: Drain line can be run horizontally or vertically)

NOTE: Field Supplied Drain can be routed horizontally from the trap, allow at least 1/4-in. per foot of slope down.

⚠ NOTICE

Extra water in transducer pressure tubing may inhibit furnace operation because of incorrect pressure readings.

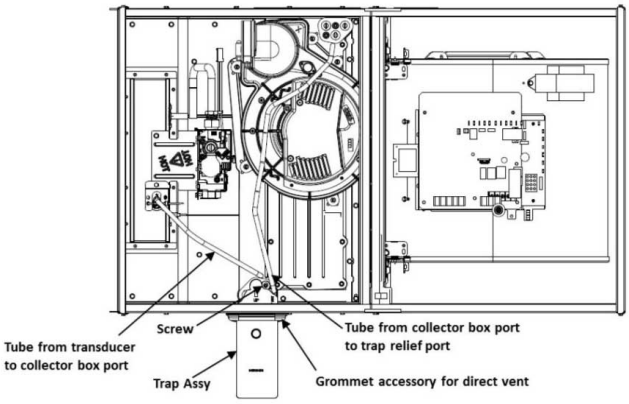

A200125

Fig. 22 – Horizontal Left - Trap Assembly Aid

7. For horizontal left side down:
   a. Remove factory-installed collector box cap.
   b. Remove the factory-installed cap from the relief port on the trap and run tube from port on the collector box corner opposite of the trap to the relief port on the trap (see Fig. 22). This will require removing the transducer pressure tubing from the factory-installed position. If the tube is too long, cut any extra length from the tube.
   c. Install transducer pressure tubing on the collector box port closest to the trap where the factory-installed collector box cap was installed (see Fig. 22). Trim transducer pressure tubing length ensuring no traps of loops for extra water collections. In the installed position, the transducer tubing should be in the lower pressure port and the relief tubing should be in the higher port.

It is permissible to run the trap up to 5 ft. away from the furnace to an area with the required trap clearance provided the following steps and conditions are followed.

Alternate Horizontal Option - Remote Trap Installation Specific Steps

1. The trap can be installed using a second adapter plate purchased separately.
   Install trap adapter to the collector box using provided machine screw (see Fig. 14).
2. Screw the adapter plate to the side of casing using six (6) of the provided sheet metal screws (see Fig. 15).
3. Screw the adapter plate to the trap adapter using provided machine screw (see Fig. 23). Drilling pilot holes is recommended to better align the plate with the rectangle opening.
4. Install the second trap plate at the remote location, 5 ft. or less away from the furnace (Fig. 23).
5. Using two field supplied 1/2-in. CPVC tubes of the desired length (5 ft. or less) and 2 field supplied CPVC elbows, run the drain from the adapter plate on the furnace to the remote adapter plate (Fig. 23).
6. Screw the trap to the adapter plate using provided machine screw (Fig. 23). Ensure trap is firmly secured and supported.
7. Follow steps 6 and 7 in the above section, Horizontal Specific Steps, for the proper routing of pressure tubing depending on furnace orientation. Substitute the relief port on the trap adapter for the relief port on the trap in remote trap installations. The factory-installed cap over the relief port on the trap should remain in place. Tubing should remain inside the furnace.

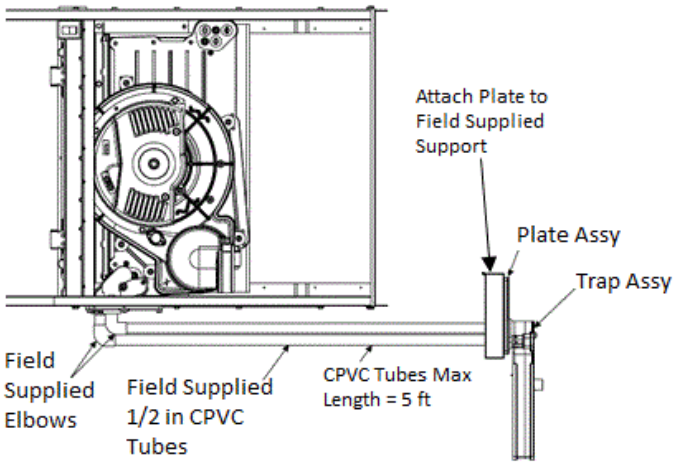

A200068

Fig. 23 – Alternate Horizontal Option - Remote Trap

Condensate Drain Connection

1. Use of the condensate drain elbow in the loose parts bag is required to make a connection to the field supplied drain.
2. Remove the pre-formed rubber drain elbow, and two spring clamps from the loose parts bag.
3. Connect the full elbow to the outlet of the condensate trap with one spring clamp. Avoid misalignment of the drain pipe which may cause kinks in the elbow or grommet (See Fig. 24).
4. The remaining drain line can be constructed from field- supplied 1/2-in. CPVC or 3/4-in. PVC pipe, in compliance with local building codes. A factory-supplied 1/2-in. CPVC to 3/4-in. PVC adapter is supplied in the loose parts bag for use as required.
5. Install the adapter or connect the 1/2-in. CPVC pipe by sliding a spring clamp over the open end of the elbow or grommet on the outside the furnace casing.
6. Open the spring clamp and insert the long end of the adapter or the 1/2-in. CPVC pipe into the outlet stub on the drain tube (See Fig. 24).
7. Connect additional condensate piping to a code-approved drain, or to a condensate pump approved for use with acidic furnace condensate and compatible with mineral and vegetable oils, such as canola oil.
8. Allow at least 1/4-in. per foot (20 mm per meter) of slope down and away from the furnace in horizontal sections of drain line.

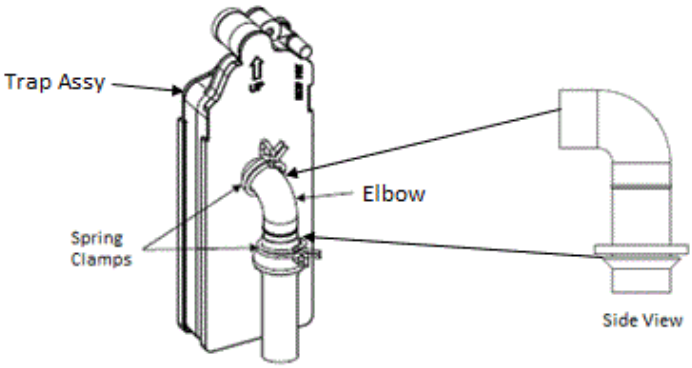

A200094

Fig. 24 – Condensate Drain Connection

Installation of Evaporator Coils

When installing the evaporator coil, refer to the allowed installation configurations (Table 7). Some coils require an 8-in. tall sheet metal spacer between the furnace and the coil or some require a metal shield between the drain pan of the coil and the discharge flanges of the furnace. This is to protect the composite drain pan of the evaporator coil.

The coil offset adapter kits in the product accessory list will require an additional field fabricated adapter to ensure the 8-in. separation.

WARNING

FIRE HAZARD

When installing evaporator coils that have composite (plastic) drain pans and are exposed directly to the furnace heat exchanger, a sheet metal spacer/transition or drain pan shield is required.

Failure to protect the coil composite drain pan could result in fire, personal injury, or death. (Table 7)

Table 7 – Evaporator Coil Spacer or Shield Requirements.

Type of Coil	Install Flush to Furnace	Install with 8-in. Spacer	Install with Metal Shield
Furnace Manufacturer's Shielded (Examples: N-Coil, V-Coil, Sloped Coil)	Allowed	Not Required	Not Required
Furnace Manufacturer's Unshielded (Example: A-Coil	Not Allowed	Allowed (Except 100k BTU size in Horizontal Right - MUST use shield)	Allowed (See Note 2)
3rd Party Coil - Factory Shielded (See Note 1)	Allowed	Not Required	Not Required
3rd Party Coil - Unshielded	Not Allowed	Allowed (Except 100k BTU size in Horizontal Right - MUST use shield)	Allowed (See Note 3)

NOTE:

1. 3rd Party Coils that are factory-supplied with a metallic shield over the plastic composite drain pan must completely shield all plastic composite materials from direct exposure to any part of the heat exchanger. Consult with 3rd Party Manufacturer to ensure coil is properly shielded. Coils that are only partially shielded should be treated as un-shielded and require a spacer.
2. Field-fabricated metallic shield must completely shield all plastic composite materials from direct exposure to any part of the heat exchanger. Coils that are only partially shielded should be treated as un-shielded and require a spacer. Dimensional requirements (see Fig. 26).
3. For 3rd party unshielded coils, consult manufacturer for design of a field-fabricated shield that completely shields all plastic composite materials from direct exposure to any part of the heat exchanger.

All adapters are field fabricated according to the dimensions for the metal shield (see Fig. 25) and for the 8-in. tall sheet metal spacer (see Fig. 26).

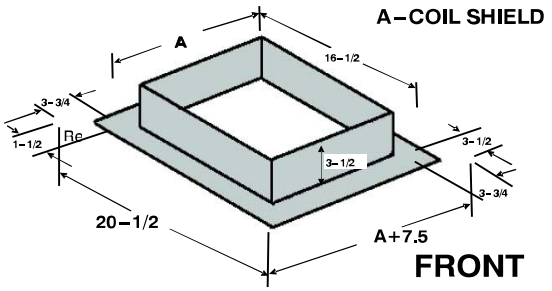

A190295

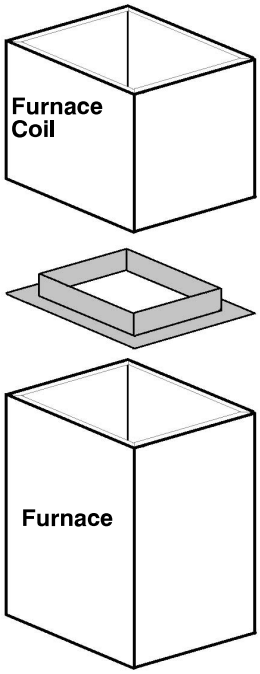

A190296

Cabinet Size	Dimension "A"
17-in.	10-in.
21-in.	13.5-in.

Fig. 25 – Dimensions Metal Shield

NOTE: The metal shield in the figure above is only recommended for use with furnace manufacturer's A-Coil and may not be compatible with 3rd party coils. In the event the shield shown above is incompatible with the desired coil, use a spacer or consult 3rd Party Manufacturer for recommended dimensions and design of suitable shield.

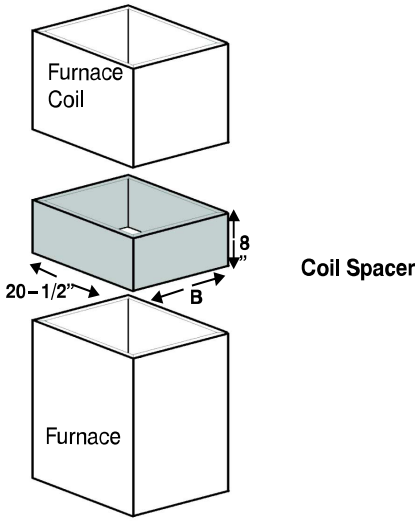

Representative drawing only, some models may vary.

A190301

Cabinet Size	Dimension "B"
17-in.	17-1/2-in.
21-in.	21-in.

Fig. 26 – Dimensions of 8-in. Tall Metal Spacer

NOTE: The allowable use of the 8-in. spacer demonstration (Table 7 and Fig. 26). The spacer may taper to accommodate different coil/furnace width combinations but must always keep an 8-in.

minimum height if used. Space between the top of the furnace casing and the bottom of the coil.

NOTE: When the indoor coil is placed in an unconditioned space, insulation should be applied and wrapped around the outside of coil casing, 8-in. adapter and supply duct contact point.

1. Create field fabricated adapter (if needed, Table 7).
2. If adapter is needed, place field fabricated adapter on furnace. Adapter should be tapered to fit coil/furnace combination when one of them is larger than the other.
3. Set coil on adapter.
4. Ensure coil is level for proper condensate drainage. In upflow application, do not tip coil toward condensate drain. In the horizontal application, ensure coil cabinet is level side to side and front to back. It is allowable to add up to 1/2-in additional slope over length and depth of coil cabinet in the direction of drain pan connection.
5. Attach coil casing to furnace using sheet metal screws. If 8-in. spacer is required, attach coil casing to spacer and attach spacer to furnace using sheet metal screws.
6. Seal joints between coil casing, adapter (if needed, Table 7), and furnace to create an air tight seal using locally approved materials.

Upflow Installation

NOTE: The furnace must be pitched for proper condensate drainage (see Fig. 31).

Supply Air Connections

For a furnace not equipped with a cooling coil, the outlet duct shall be provided with a removable access panel. This opening shall be accessible when the furnace is installed and shall be of such a size that the heat exchanger can be viewed for possible openings using light assistance or a probe can be inserted for sampling the air stream. The cover attachment shall prevent leaks.

Connect supply-air duct to flanges on furnace supply-air outlet. Bend flange upward to 90° with wide duct pliers (see Fig. 27). The supply-air duct must be connected to ONLY the furnace supply-outlet-air duct flanges or air conditioning coil casing (when used). DO NOT cut main furnace casing side to attach supply air duct, humidifier, or other accessories. All supply-side accessories MUST be connected to duct external to furnace main casing.

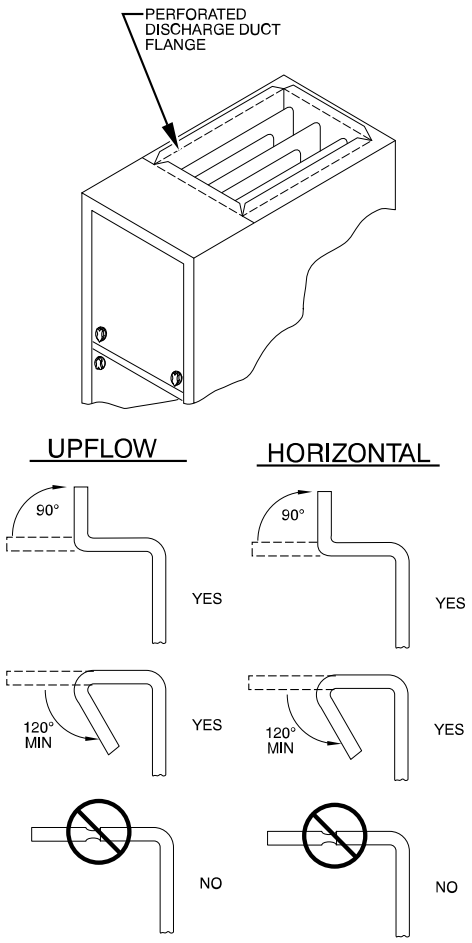

A190216

Fig. 27 – Duct Flanges

NOTE: Coil offset kits do not meet the 8-in. separation between the coil pan and furnace if required (Table 7). Additional metal shield or an extension to achieve an 8-in. total separation is required.

Return Air Connections

WARNING

FIRE HAZARD

A failure to follow this warning could cause personal injury, death and/or property damage.

Never connect return-air ducts to the back of the furnace. Follow instructions below.

The return-air duct must be connected to bottom, sides (left or right), or a combination of bottom and side(s) of main furnace casing. Bypass humidifier may be attached into unused return air side of the furnace casing (see Fig. 28 and Fig. 29).

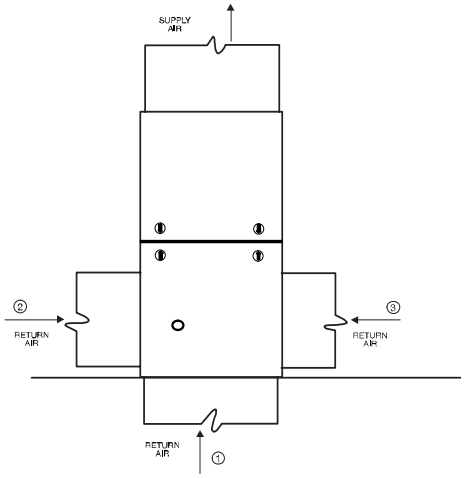

A200426

Fig. 28 – Upflow Return Air Configurations and Restrictions

NOTE: For Upflow Right Side Return, use upflow offset installation for condensate trap.

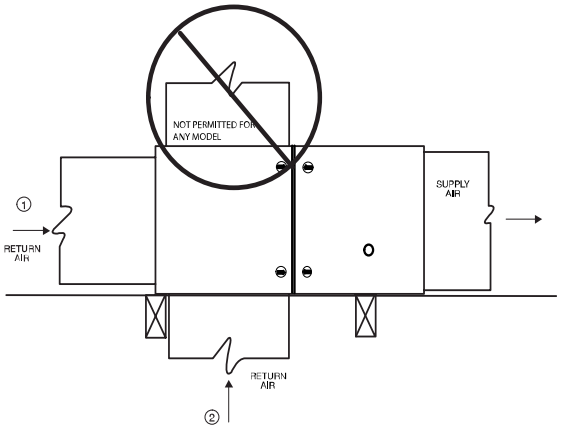

A200425

Fig. 29 – Horizontal Return Air Configurations and Restrictions

Bottom Return Air Inlet

These furnaces are shipped with bottom closure panel installed in bottom return-air opening. Remove and discard this panel when bottom return air is used. To remove bottom closure panel (see Fig. 34).

Side Return Air Inlet

These furnaces are shipped with bottom closure panel installed in bottom return-air opening. This panel MUST be in place when only side return air is used. Where required by code, seal bottom closure to furnace with tape, mastic or other durable sealing method.

NOTE: For allowable side returns in horizontal configurations (see Fig. 29).

NOTICE

Upflow installations utilizing the right side air return opening should follow the Upflow Specific Steps - Offset Installation to ensure the full opening is available for return ductwork.

Leveling Legs (If Desired)

In upflow position with side return inlet(s), leveling legs may be used. (see Fig. 30). Install field-supplied, 5/16 x 1-1/2 in. (8 x 38 mm) (max) corrosion-resistant machine bolts, washers and nuts.

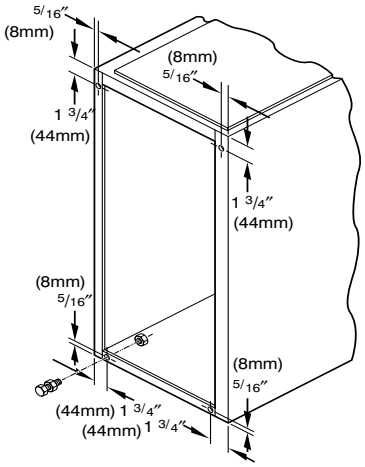

A89014

Fig. 30 – Leveling Legs

NOTE: Bottom closure must be used when leveling legs are used. It may be necessary to remove and reinstall bottom closure panel to install leveling legs. To remove bottom closure panel (see Fig. 34).

To install leveling legs:

1. Position furnace on its back. Locate and drill a hole in each bottom corner of furnace.
2. For each leg, install nut on bolt and then install bolt with nut in hole. (Install flat washer if desired.)
3. Install another nut on other side of furnace base. (Install flat washer if desired.)
4. Adjust outside nut to provide desired height, and tighten inside nut to secure arrangement.
5. Reinstall bottom closure panel if removed.

CAUTION

CUT HAZARD

Failure to follow this caution may result in personal injury.

Sheet metal parts may have sharp edges or burrs. Use care and wear appropriate protective clothing, safety glasses and gloves when handling parts, and servicing furnaces.

Horizontal Installation

NOTE: The furnace must be pitched forward for proper condensate drainage (see Fig. 31).

WARNING

FIRE, EXPLOSION, AND CARBON MONOXIDE POISONING HAZARD

Failure to follow this warning could result in personal injury, death, or property damage.

Do not install the furnace on its back or hang furnace with control compartment facing downward. Safety control operation will be adversely affected. Never connect return-air ducts to the back of the furnace.

⚠ CAUTION

MINOR PROPERTY HAZARD

Failure to follow this caution may result in minor property damage.

Local codes may require a drain pan under entire furnace and condensate trap when a condensing furnace is used in an attic application or over a finished ceiling.

The furnace can be installed horizontally in an attic or crawlspace on either the left-hand (LH) or right-hand (RH) side. The furnace can be hung from floor joists, rafters or trusses or installed on a non-combustible platform, blocks, bricks or pad.

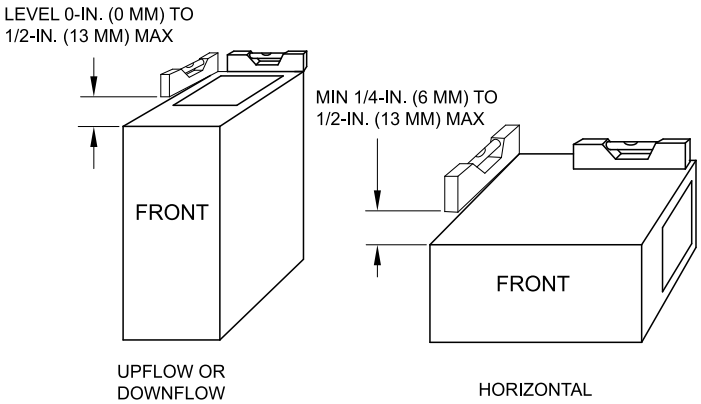

A11237

Fig. 31 – Furnace Pitch Requirements

Platform Furnace Support

Construct working platform at location where all required furnace clearances are met. (Table 2 and Fig. 32) For furnaces with 1-in. (25 mm) clearance requirement on side, set furnace on non-combustible blocks, bricks or angle iron. For crawlspace installations, if the furnace is not suspended from the floor joists, the ground underneath furnace must be level and the furnace set on blocks or bricks. Condensate Trap section for required and recommended clearances for trap installation (see Fig. 6, Fig. 21, and Fig. 32).

Suspended Furnace Support

The furnace must be supported under the entire length of the furnace with threaded rod and angle iron (see Fig. 33). Secure angle iron to bottom of furnace as shown.

Roll-Out Protection

Provide a minimum 12-in. x 22-in. (305 x 559 mm) piece of sheet metal for flame roll-out protection in front of burner area for furnaces closer than 12-in. (305 mm) above the combustible deck or suspended furnaces closer than 12-in. (305 mm) to joists. The sheet metal MUST extend underneath the furnace casing by 1-in. (25 mm) with the door removed.

The bottom closure panel on furnaces of widths 17-1/2-in. (445 mm) and larger may be used for flame roll-out protection when bottom of furnace is used for return air connection.

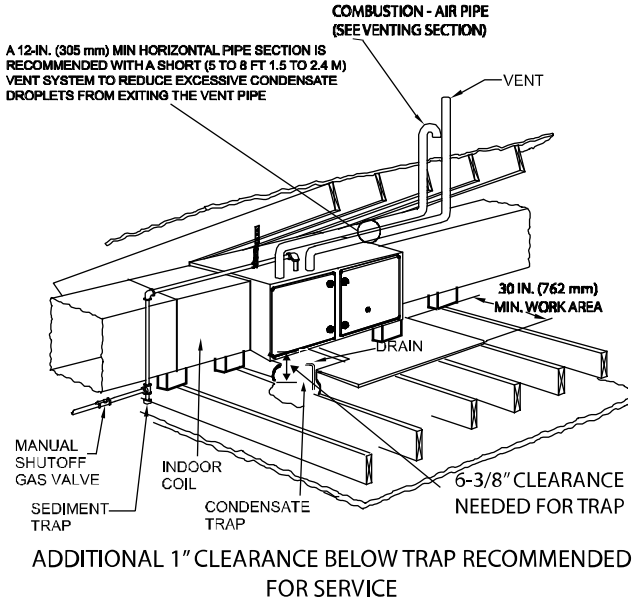

A200088

Fig. 32 – Working Platform for Attic Installation

NOTE: Furnace shown is a direct vent application. Refer to the venting section for allowable vent configurations.

NOTE: N Coil only, add 8-in. separation between coil and furnace for all other unshielded coils. (See evaporator coil spacer or shield requirements.)

NOTE: Local codes may require a drain pan and condensate trap when a condensing furnace is installed over a finished ceiling.

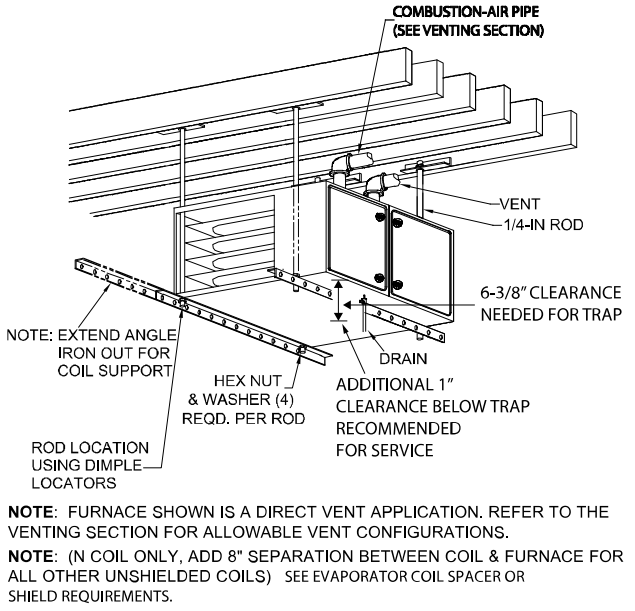

A200085

Fig. 33 – Suspended Furnace Installation

NOTE: Furnace shown is a direct vent application. Refer to the venting section for allowable vent configurations.

NOTE: N Coil only, add 8-in. separation between coil and furnace for all other unshielded coils. (See evaporator coil spacer or shield requirements.)

NOTE: Local codes may require a drain pan and condensate trap when a condensing furnace is installed over a finished ceiling.

Supply Air Connections

For a furnace not equipped with a cooling coil, the outlet duct shall be provided with a removable access panel. This opening shall be accessible when the furnace is installed and shall be of such a size that

the heat exchanger can be viewed for possible openings using light assistance or a probe can be inserted for sampling the air stream. The cover attachment shall prevent leaks.

Connect supply-air duct to flanges on furnace supply-air outlet. Bend flange upward to 90° with wide duct pliers (see Fig. 27). The supply-air duct must be connected to ONLY the furnace supply-outlet-air duct flanges or air conditioning coil casing (when used). DO NOT cut main furnace casing side to attach supply air duct, humidifier, or other accessories. All supply-side accessories MUST be connected to duct external to furnace main casing.

Return Air Connections

The return-air duct may be connected to bottom of the furnace. The side of casing that faces downward may also be used for return air connection. A combination of the bottom and downward facing side may also be used. The upward facing side of the casing cannot be used as a return air connection (see Fig. 29).

Bottom Return Air Inlet

These furnaces are shipped with bottom closure panel installed in bottom return-air opening. Remove and discard this panel when bottom return air is used. To remove bottom closure panel (see Fig. 34).

Side Return Air Inlet

These furnaces are shipped with bottom closure panel installed in bottom return-air opening. This panel MUST be in place when side return air inlet(s) are used without a bottom return air inlet.

Not all horizontal furnaces are approved for side return air connections (see Fig. 29). Where required by code, seal bottom closure to furnace with tape, mastic, or other durable sealing method.

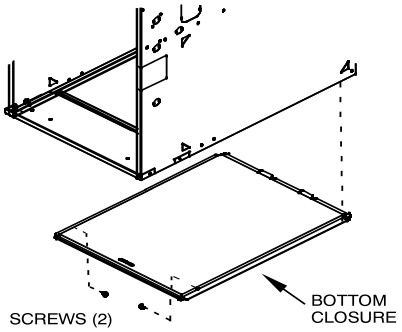

Representative drawing. Models may vary.

1. Lay furnace on the back or side
2. Remove the two (2) screws that secure the bottom closure panel to the furnace casing and remove the panel

A170123

1. Lay furnace on the back or side
2. Remove the two (2) screws that secure the bottom closure panel to the furnace casing and remove the panel

Fig. 34 – Removing Bottom Closure Panel (2 Screws)

FILTER ARRANGMENT

WARNING

FIRE, CARBON MONOXIDE AND POISONING HAZARD

Failure to follow this warning could result in fire, personal injury or death.

Never operate a furnace without a filter or filtration device installed. Never operate a furnace with filter or filtration device access doors removed.

There are no provisions for an internal filter in these furnaces. An external filter rack is required and is purchased separately. A field supplied accessory air cleaner may also be used in place of the filter rack.

For upflow applications, the filter can be installed on either side of the furnace, the bottom of the furnace or any combination of side and bottom of the furnace (see Fig. 28).

For horizontal applications, the filter rack (or field supplied accessory air cleaner) can be connected to the bottom opening on the furnace. For side return use in the horizontal position (see Fig. 29). If both side and bottom openings are used (see Fig. 29), each opening used will require a filter.

A filter rack or any field supplied accessory air cleaner can also be installed in the common return duct prior to entering the return air opening in any orientation.

The furnace may be used with an optional external media filter cabinet. The optional media filter cabinet uses either a standard 1-in. (25 mm) filter or 4-in. (102 mm) wide media filter which can be purchased separately. A field supplied accessory air cleaner may also be used in place of the media cabinet.

Filter and Return Duct Sizing

Pressure drop must be taken into account when sizing filters, filter racks, IAQ devices, and associated system ductwork. For a comparison of Pressure Drop (initial/clean resistance to airflow) versus Airflow for a variety of filter media types and sizes (Table 10). These are representative numbers. Consult the filter or IAQ device manufacturers' specification sheet for performance data for a particular filter media or IAQ device.

Design the filter and associated ductwork for the best match of pressure drop versus filter size. Best practice usually chooses filter systems with pressure drops under 0.2 in. w.c. (50 Pa), with the best blower electrical efficiency and system airflow performance occurring with filter pressure drops under 0.1 in. w.c. (25 Pa).

Due to the relatively high pressure drops of 1-in. (25 mm) thick after-market filter media, it is recommended that the filtration system be designed for at least 2-in. (51 mm) thick media.

TIPS FROM CONTRACTORS: Install a media cabinet capable of incorporating a 4-in. (102 mm) thick media filter. This allows room for future upgrades to other IAQ devices.

NOTICE

Design the duct system FIRST to determine how much pressure drop may be allowed in the filter system. See the Air Ducts section. Excessive filter pressure drop often compromises system airflow and duct performance, causes inadequate airflow to the furthest ends of the duct system, as well as causes excess noise and higher than anticipated electrical consumption.

Provide duct transitions, as required, to smoothly transition airflow from the return duct system to the filter (or IAQ device) to the furnace when the dimensions of the ductwork or furnace return air opening do not match the required filter or IAQ device dimensions. See the instructions supplied with factory-accessory duct adapters.

Table 8 – Air Filter Selection and Duct Sizing - In. (mm)

FURNACE CASING WIDTH	FILTER SIZE		FILTER TYPE*
	SIDE RETURN	BOTTOM RETURN	
14-3/16 (360)†	16 x 25 x 3/4 (406 x 635 x 19)	14 x 25 x 3/4 (356 x 635 x 19)	Washable
17-1/2 (445)	16 x 25 x 3/4 (406 x 635 x 19)	16 x 25 x 3/4 (406 x 635 x 19)	Washable
21 (533)	16 x 25 x 3/4 (406 x 635 x 19)	20 x 25 x 3/4 (508 x 635 x 19)	Washable
24-1/2 (622)	16 x 25 x 3/4 (406 x 635 x 19)	24 x 25 x 3/4 (610 x 635 x 19)	Washable

*. Recommended to maintain air filter face velocity. See Product Data for part number.
†. Not all families have these models.

Table 9 – Opening Dimensions - In. (mm)

FURNACE CASING WIDTH IN. (mm)	APPLICATION	PLENUM OPENING		FLOOR OPENING	
		A	B	C	D
14–3/16 (360)*	Upflow Applications on Combustible or Noncombustible Flooring (subbase not required)	12-11/16 (322)	21-5/8 (549)	13-5/16 (338)	22-1/4 (565)
17–1/2 (445)	Upflow Applications on Combustible or Noncombustible Flooring (subbase not required)	16 (406)	21-5/8 (549)	16-5/8 (422)	22-1/4 (565)
21 (533)	Upflow Applications on Combustible or Noncombustible Flooring (subbase not required)	19-1/2 (495)	21-5/8 (549)	20-1/8 (511)	22-1/4 (565)
24-1/2 (622)*	Upflow Applications on Combustible or Noncombustible Flooring (subbase not required)	23 (584)	21-5/8 (549)	23-5/8 (600)	22-1/4 (565)

*. Not all families have these models.

Table 10 – Filter Media Pressure Drop (Clean) Versus Airflow - in. w.c. (Pa)

16 x 25 Filter (406 x 635 mm)		Factory-Accessory Washable		Factory-Accessory Media*		Representative After-Market Filter Media*							
						Fiberglass*				Pleated*			
CFM	L/s	(1-in. / 2.5 cm)		(4-in. / 10 cm)		(1-in. / 2.5 cm)		(2-in. / 5 cm)		(1-in. / 2.5 cm)		(2-in. / 5 cm)	
600	(283)	0.04	(10)	0.05	(13)	0.06	(15)	0.09	(22)	0.20	(51)	0.13	(34)
800	(378)	0.05	(13)	0.07	(18)	0.08	(21)	0.13	(32)	0.29	(72)	0.20	(49)
1000	(472)	0.06	(16)	0.11	(28)	0.11	(28)	0.17	(43)	-	-	0.27	(67)
1200	(566)	0.07	(18)	0.15	(37)	0.14	(36)	0.22	(56)	-	-	-	-
1400	(661)	0.08	(21)	0.19	(48)	0.18	(45)	0.28	(70)	-	-	-	-
1600	(755)	0.09	(23)	0.24	(60)	0.21	(54)	-	-	-	-	-	-
1800	(850)	0.10	(25)	-	-	0.26	(64)	-	-	-	-	-	-
20 x 25 Filter (508 x 635 mm)		Factory-Accessory Washable		Factory-Accessory Media*		Representative After-Market Filter Media*							
						Fiberglass*				Pleated*			
CFM	(L/s)	(1-in. / 2.5 cm)		(4-in. / 10 cm)		(1-in. / 2.5 cm)		(2-in. / 5 cm)		(1-in. / 2.5 cm)		(2-in. / 5 cm)	
800	(378)	0.04	(11)	0.05	(12)	0.06	(16)	0.09	(24)	0.22	(55)	0.15	(37)
1000	(472)	0.05	(13)	0.07	(18)	0.08	(21)	0.13	(32)	0.29	(72)	0.20	(49)
1200	(566)	0.06	(15)	0.09	(22)	0.11	(27)	0.16	(41)	-	-	0.25	(63)
1400	(661)	0.07	(17)	0.12	(31)	0.13	(33)	0.20	(51)	-	-	0.31	(79)
1600	(755)	0.08	(19)	0.15	(38)	0.16	(40)	0.24	(61)	-	-	-	-
1800	(850)	0.08	(21)	0.18	(47)	0.18	(47)	0.29	(73)	-	-	-	-
2000	(944)	0.09	(23)	0.22	(56)	0.21	(54)	-	-	-	-	-	-
2200	(1038)	0.09	(24)	0.26	(66)	0.25	(62)	-	-	-	-	-	-

If the filter size that you are looking for is not contained in Table 10, Table 11 for a comparison of Pressure Drop (initial/clean resistance to airflow) versus Face Velocity for a variety of filter media types.

The following equations relate Face Velocity (FPM), Filter Area and Airflow (CFM):

Filter Face Velocity = Airflow / Filter Area

Minimum Filter Area = Rated System Airflow / Maximum Filter Face Velocity

Table 11 – Filter Media Pressure Drop (Clean) Versus Face Velocity- in. w.c. (Pa)

Face Velocity		Factory-Accessory Washable		Representative After-Market Filter Media*							
				Fiberglass*				Pleated*			
FPM	(m/s)	(1-in. / 2.5 cm)		(1-in. / 2.5 cm)		(2-in. / 5 cm)		(1-in. / 2.5 cm)		(2-in. / 5 cm)	
200	(1)	0.04	(10)	0.05	(13)	0.08	(20)	0.18	(47)	0.12	(31)
300	(1.5)	0.05	(14)	0.09	(22)	0.13	(34)	0.30	(75)	0.21	(52)
400	(2)	0.07	(17)	0.13	(32)	0.20	(50)	-	-	0.31	(78)
500	(2.5)	0.08	(21)	0.18	(44)	0.27	(69)	-	-	-	-
600	(3)	0.09	(23)	0.23	-	-	-	-	-	-	-
700	(3.6)	0.10	(26)	0.29	-	-	-	-	-	-	-

*. Representative estimates from filter manufacturer data sheets.
See manufacturers' specifications for pressure drop versus airflow data for specific filter media.

AIR DUCTS

NOTICE

Many states, provinces and localities are considering or have implemented standards and/or restrictions on duct sizing practices, ductwork leakage, and/or ductwork thermal, airflow and electrical efficiencies. CONSULT LOCAL CODE OFFICIALS for ductwork design and performance requirements in your area.

General Requirements

The duct system should be designed and sized according to accepted national standards such as those published by: Air Conditioning Contractors Association (ACCA Manual D), Sheet Metal and Air Conditioning Contractors National Association (SMACNA) or American Society of Heating, Refrigerating and Air Conditioning Engineers (ASHRAE) or consult *The Air Systems Design Guidelines* reference tables available from your local distributor. The duct system should be sized to handle the required system design CFM at the design external static pressure. The furnace airflow rates are provided Table 20 - CFM (with Filter). When a furnace is installed so that the supply ducts carry air circulated by the furnace to areas outside the space containing the furnace, the return air shall also be handled by duct(s) sealed to the furnace casing and terminating outside the space containing the furnace.

Secure ductwork with proper fasteners for type of ductwork used. Seal supply- and return-duct connections to furnace with code approved tape or duct sealer.

NOTICE

Cabinet air leakage is less than 2% at 1.0 in. w.c. Cabinet air leakage is less than 1.4% at 0.5 in. w.c. when tested in accordance with ASHRAE Standard 193.

NOTE: Flexible connections should be used between ductwork and furnace to prevent transmission of vibration.

Ductwork passing through unconditioned space should be insulated to enhance system performance. When air conditioning is used, a vapor barrier is recommended.

Maintain a 1-in. (25 mm) clearance from combustible materials to supply air ductwork for a distance of 36-in. (914 mm) horizontally from the furnace. See NFPA 90B or local code for further requirements.

Return Duct Sizing

Refer to the Filter Selection and Duct Sizing section for information on the proper selection of filter sizes and the associated ductwork and duct transitions. Improperly designed filtering systems and return ductwork are the most common causes of airflow and/or noise complaints in HVAC systems.

Ductwork Acoustical Treatment

NOTE: Metal duct systems that do not have a 90 degree elbow and 10 ft. (3 M) of main duct to the first branch take-off may require internal acoustical lining. As an alternative, fibrous ductwork may be used if constructed and installed in accordance with the latest edition of SMACNA construction standard on fibrous glass ducts. Both acoustical lining and fibrous ductwork shall comply with NFPA 90B as tested by UL Standard 181 for Class 1 Rigid air ducts.

NOTE: For horizontal applications, the top most flange may be bent past 90° to allow the evaporator coil to hang on the flange temporarily while the remaining attachment and sealing of the coil are performed.

GAS PIPING

WARNING

FIRE OR EXPLOSION HAZARD

Failure to follow this warning could result in personal injury, death, and/or property damage.

Never purge a gas line into a combustion chamber. Never test for gas leaks with an open flame. Use a commercially available soap solution made specifically for the detection of leaks to check all connections. A fire or explosion may result causing property damage, personal injury or loss of life.

WARNING

FIRE OR EXPLOSION HAZARD

Failure to follow this warning could result in personal injury, death, and/or property damage.

Use proper length of pipe to avoid stress on gas control manifold and gas valve.

WARNING

FIRE OR EXPLOSION HAZARD

Failure to follow this warning could result in personal injury, death, and/or property damage.

Gas valve inlet and/or inlet pipe must remain capped until gas supply line is permanently installed to protect the valve from moisture and debris. Also, install a sediment trap in the gas supply piping at the inlet to the gas valve.

Gas piping must be installed in accordance with national and local codes. Refer to current edition of NFPA 54/ANSI Z223.1 in the U.S.A.

Installations must be made in accordance with all authorities having jurisdiction. If possible, the gas supply line should be a separate line running directly from meter to furnace.

NOTE: Use a back-up wrench on the inlet of the gas valve when connecting the gas line to the gas valve.

NOTICE

In the state of Massachusetts:

1. Gas supply connections MUST be performed by a licensed plumber or gas fitter.
2. When flexible connectors are used, the maximum length shall not exceed 36 in. (915 mm).
3. When lever handle type manual equipment shutoff valves are used, they shall be T-handle valves.
4. The use of copper tubing for gas piping is NOT approved by the state of Massachusetts.

For recommended gas pipe sizing (Table 12). Risers must be used to connect to furnace and to meter. Support all gas piping with appropriate straps, hangers, etc. Use a minimum of one hanger every 6 ft. (2 M). Joint compound (pipe dope) should be applied sparingly and only to male threads of joints.

⚠ WARNING

FIRE OR EXPLOSION HAZARD

A failure to follow this warning could result in personal injury, death, and/or property damage.

If local codes allow the use of a flexible gas appliance connector, always use a new listed connector. Do not use a connector which has previously served another gas appliance. Black iron pipe shall be installed at the furnace gas control valve and extend a minimum of 2-in. (51 mm) outside the furnace.

⚠ CAUTION

FURNACE DAMAGE HAZARD

Failure to follow this caution may result in furnace damage.

Connect gas pipe to furnace using a backup wrench to avoid damaging gas controls and burner misalignment.

An accessible manual equipment shutoff valve MUST be installed external to furnace casing and within 6 ft. (2 M) of furnace.

Install a sediment trap externally in the riser leading to furnace (see Fig. 37). Connect a capped nipple into lower end of tee. Capped nipple should extend below level of furnace gas controls. Place a ground joint union between furnace gas control valve and exterior manual equipment gas shutoff valve.

A 1/8-in. (3 mm) NPT plugged tapping, accessible for test gauge connection, MUST be installed immediately upstream of gas supply connection to furnace and downstream of manual equipment shutoff valve.

Piping should be pressure and leak tested in accordance with the current edition of the NFPA 54/ANSI Z223.1 in the United States, local, and national plumbing and gas codes before the furnace has been connected. After all connections have been made, purge lines and check for leakage at furnace prior to operating furnace.

NOTE: The furnace gas control valve inlet pressure tap connection is suitable to use as test gauge connection providing test pressure DOES NOT exceed maximum 0.5 psig (14-in. w.c.) stated on gas control valve (see Fig. 64).

If pressure exceeds 0.5 psig (14-in. w.c.), gas supply pipe must be disconnected from furnace and capped before and during supply pipe pressure test. If test pressure is equal to or less than 0.5 psig (14-in. w.c.), turn off electric shutoff switch located on furnace gas control valve and accessible manual equipment shutoff valve before and during supply pipe pressure test. After all connections have been made, purge lines and check for leakage at furnace prior to operating furnace.

The gas supply pressure shall be within the maximum and minimum inlet supply pressures marked on the rating plate with the furnace burners ON and OFF.

Gas entry can be from left or right side, or top panel (see Fig. 35 and Fig. 36).

Gas Pipe Grommet

For direct vent (2-pipe) applications, the casing hole for the gas pipe must be sealed to prevent air leakage. Remove the knockout or casing plug, install the grommet in the hole, then insert the gas pipe. The grommet is included in the loose parts bag (see Fig. 35).

Table 12 – Maximum Capacity of Pipe

Nominal:	1/2 (12.7)	3/4 (19.0)	1 (25.4)	1-1/4 (31.8)	1-1/2 (38.1)
Actual ID:	0.622	0.824	1.049	1.380	1.610
Length (ft)	Capacity in Cubic Feet of Gravity				
10 (3.0)	172	360	678	1390	2090
20 (6.0)	118	247	466	957	1430
30 (9.1)	95	199	374	768	1150
40 (12.1)	81	170	320	657	985
50 (15.2)	72	151	284	583	873

NOTE: Cubic ft. of natural gas per hr for gas pressures of 0.5 psig (14-in. w.c.) or less and a pressure drop of 0.5-in. w.c. (based on a 0.60 specific gravity gas). Ref: Chapter 6 current edition of ANSI Z223/NFPA 54.

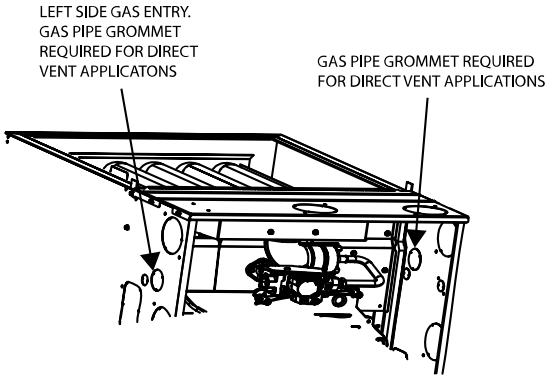

A190265

Fig. 35 – Gas Entry

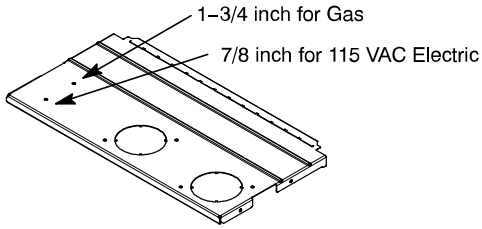

A230050

Fig. 36 – Alternate Gas and Electric Entry

NOTE: Top plate may be field drilled for alternate gas and 115 VAC electric entry

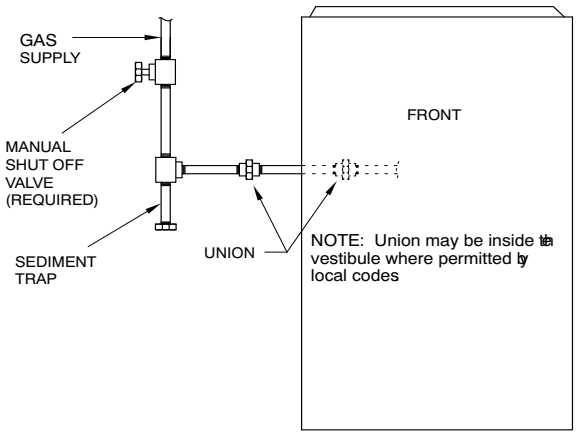

A11035

Fig. 37 – Typical Gas Pipe Arrangement

ELECTRICAL CONNECTIONS

WARNING

ELECTRICAL SHOCK, FIRE OR EXPLOSION HAZARD

Failure to follow safety warnings could result in dangerous operation, serious injury, death or property damage.

Improper servicing could result in dangerous operation, serious injury, death or property damage.

- Before servicing, disconnect all electrical power to furnace.
- When servicing controls, label all wires prior to disconnection. Reconnect wires correctly.
- Verify proper operation after servicing.
- Always reinstall access doors after completing service and maintenance.

WARNING

ELECTRICAL SHOCK HAZARD

Failure to follow this warning could result in personal injury or death.

Blower door switch opens 115-V power to control. No component operation can occur. Do not bypass or close switch with blower door removed.

Field wiring diagram showing typical field 115-V wiring (see Fig. 41). Check all factory and field electrical connections for tightness.

Field-supplied wiring shall conform with the limitations of 63°F (35°C) rise.

WARNING

ELECTRICAL SHOCK AND FIRE HAZARD

Failure to follow this warning could result in personal injury, death, or property damage.

The cabinet MUST have an uninterrupted or unbroken ground according to NEC NFPA 70 or local codes to minimize personal injury if an electrical fault should occur. This may consist of electrical wire, conduit approved for electrical ground or a listed, grounded power cord (where permitted by local code) when installed in accordance with existing electrical codes. Refer to the power cord manufacturer's ratings for proper wire gauge. Do not use gas piping as an electrical ground.

CAUTION

FURNACE MAY NOT OPERATE HAZARD

Failure to follow this caution may result in intermittent furnace operation.

Furnace control must be grounded for proper operation or else control will lock out. Control must remain grounded through green/yellow wire routed to gas valve and manifold bracket screw.

115-V Wiring

Furnace must have a 115-V power supply properly connected and grounded.

NOTE: Proper polarity must be maintained for 115-V wiring. If polarity is incorrect, control LED status indicator light will flash Status code (10 . 1) is displayed. The and furnace will NOT operate.

Verify that the voltage, frequency, and phase correspond to that specified on unit rating plate. Also, check to be sure that service provided by utility is sufficient to handle load imposed by this equipment. Refer to rating plate or equipment electrical specifications (Table 13).

U.S.A. Installations: Make all electrical connections in accordance with the current edition of the National Electrical Code (NEC) NFPA 70 and any local codes or ordinances that might apply.

WARNING

FIRE HAZARD

Failure to follow this warning could result in personal injury, death, or property damage.

Do not connect aluminum wire between disconnect switch and furnace. Use only copper wire (see Fig. 38).

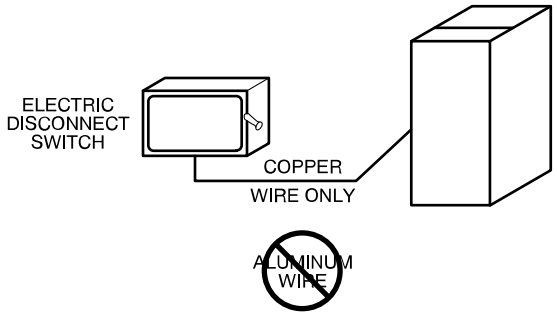

A190279

Fig. 38 – Field-Supplied External Electrical Box on Furnace Casing

Use a separate, fused branch electrical circuit with a properly sized fuse or circuit breaker for this furnace. For wire size and fuse specifications (Table 13). A readily accessible means of electrical disconnect must be located within sight of the furnace

Furnace is shipped with extended-length high voltage wire leads to reach all potential mounting locations of the J-Box. Reduce excess high voltage wire length from inside the furnace vestibule by pulling the wires entirely through the J-Box opening or field supplied strain relief and shortening the leads to no more than 4-inches inside the J-Box.

J-Box Installation

WARNING

FIRE OR ELECTRICAL SHOCK HAZARD

Failure to follow this warning could result in personal injury, death, or property damage.

High voltage field connections must be located in with furnace, or in field supplied external disconnect mounted to furnace.

If field-supplied manual disconnect switch is to be mounted on furnace casing side, select a location where a drill or fastener cannot damage electrical or gas components.

The J-Box must be used when field line voltage electrical connections are made to the furnace wiring harness inside the furnace casing. The J-Box cover is not required if a field-supplied external electrical box is attached to the outside of the furnace casing. The field ground wire and furnace main ground wire are grounded when the J-Box bracket is attached to the furnace and the field ground wire and factory ground wire are secured to the bracket grounding screw. If the J-Box cover is not used, the field and factory spliced connections must be located inside the external electrical box. Do not leave splice connections unprotected inside the furnace.

The J-Box cover, mounting bracket and screws are shipped in the loose parts bag included with the furnace. J-Box mounting locations (see Fig. 39).

The J-Box mounting bracket and green ground screw is used as a grounding point for all line voltage wiring options. The J-Box cover may be omitted when electrical connections are made inside an external electrical box mounted external to the casing.

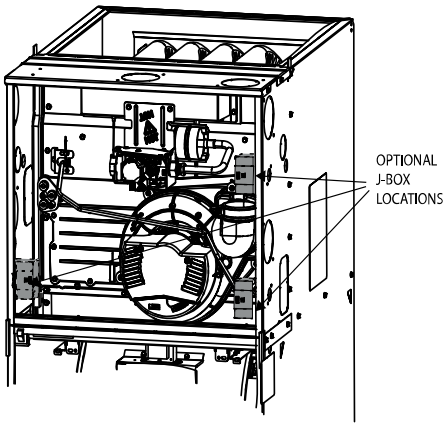

A190263

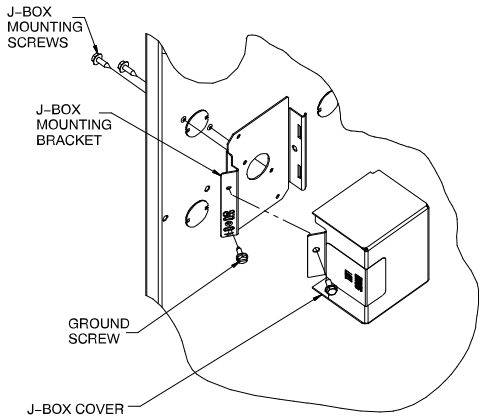

A190264

Fig. 39 – Installing J-Box (When Used)

External Electrical Box on Furnace Casing

NOTE: Check to ensure that external electrical box does not interfere with duct work, gas piping or the indoor coil drain. Alternate electric entry through top panel (see Fig. 36).

1. Select and remove 7/8-in. (22 mm) knock-out on the desired side of the casing. Remove the knock-out from the casing.

NOTE: If electrical entry through the furnace top panel is used, a 7/8-in. (22 mm) hole must be drilled through the top panel.

2. Drill two (2) 1/8-in. (3 mm) pilot holes through the dimples in the furnace casing near the 7/8-in. knock-out.

NOTE: If electrical entry through the furnace top panel is used, mark the screw hole locations using the mounting holes in the external electrical box as a template.

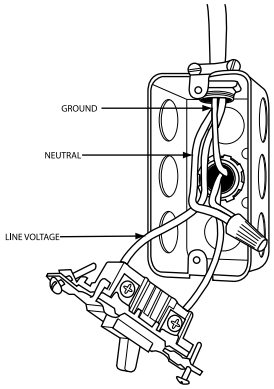

A190278

Fig. 40 – Field-Supplied External Electrical Box on Furnace Casing

For a side-mounted external electrical box, complete the following:

1. Align the J-Box bracket with the knock-out inside the furnace casing.
2. Install the threaded end of a strain-relief bushing through the J-Box bracket and the furnace casing. Strain-relief bushing should be installed so that the bushing can be tightened around the wiring harness inside the furnace casing.
3. Align the external electrical box with the 7/8-in. (22 mm) knock-out.
4. Install and tighten the lock-nut on the strain-relief bushing inside the external electrical box.
5. Fasten the external electrical box to the furnace casing using two (2) sheet metal screws.
6. Route field power wiring into external electrical box.
7. Pull furnace line voltage power wires through strain-relief bushing of the external electrical box.
8. Pull the ground wire of the field line voltage wiring through the strain-relief bushing into the furnace casing.
9. Install the green ground screw to the J-Box bracket and attach both ground wires to the green ground screw.
10. Connect any code required external disconnect(s) to field power wiring.
11. Connect field power and neutral leads to furnace power leads inside the external electrical box (see Fig. 32).

For a top panel-mounted external electrical box, complete the following:

1. Drill two (2) 1/8-in. (3 mm) pilot holes through the dimples in the furnace casing near the 7/8-in. knock-out on the side of the casing. Do not remove the knock-out in the side of the casing.
2. Align the J-Box bracket with the pilot holes inside the furnace casing.
3. Install 2 screws through the outside of the casing to secure the J-Box bracket to the furnace casing.
4. Route field power wiring into external electrical box.
5. Pull furnace line voltage power wires through strain-relief bushing of the external electrical box.
6. Pull the ground wire of the field line voltage wiring through the strain-relief bushing into the furnace casing.
7. Install the green ground screw to the J-Box bracket and attach both ground wires to the green ground screw.
8. Connect any code required external disconnect(s) to field power wiring.
9. Connect field power and neutral leads to furnace power leads inside the external electrical box (see Fig. 34).

Power Cord Installation in Furnace J-Box

NOTE: Power cords must be able to handle the electrical requirements (Table 13). Refer to power cord manufacturer's listings.

1. Install J-Box mounting bracket to inside of furnace casing (see Fig. 39).
2. Route listed power cord through 7/8-in. (22 mm) diameter hole in casing and J-Box bracket.
3. Secure power cord to J-Box bracket with a strain relief bushing or a connector approved for the type of cord used.
4. Pull furnace power wires through 1/2-in. (12 mm) diameter hole in J-Box. If necessary, loosen power wires from strain—relief wire-tie on furnace wiring harness.
5. Connect field ground wire and factory ground wire to green ground screw on J-Box mounting bracket (see Fig. 39).
6. Connect power cord power and neutral leads to furnace power leads (see Fig. 41).
7. Attach furnace J-Box cover to mounting bracket with screws supplied in loose parts bag. Do not pinch wires between cover and bracket (see Fig. 39).

BX Cable Installation in Furnace J-Box

1. Install J-Box mounting bracket to inside of furnace casing (see Fig. 39).
2. Route BX connector through 7/8-in. (22 mm) diameter hole in casing and J-Box bracket.
3. Secure BX cable to J-Box bracket with connectors approved for the type of cable used.
4. Connect field ground wire and factory ground wire to green ground screw on J-Box mounting bracket (see Fig. 39).
5. Connect field power and neutral leads to furnace power leads (see Fig. 41).
6. Attach furnace J-Box cover to mounting bracket with screws supplied in loose parts bag. Do not pinch wires between cover and bracket.

⚠ WARNING

FIRE, EXPLOSION, ELECTRICAL SHOCK, AND CARBON MONOXIDE POISONING HAZARD

Failure to follow this warning could result in dangerous operation, personal injury, death, or property damage.

Do not drill into blower shelf of furnace to route control wiring. Route any control or accessory wiring to the blower compartment through external holes provided on the casing.

24-V Wiring

Make field 24-V connections at the 24-V terminal strip. (see Fig. 42) Connect terminal Y (see Fig. 61) for proper cooling operation. Use only AWG No. 18, color-coded, copper thermostat wire.

NOTE: Use AWG No. 18 color-coded copper thermostat wire for lengths up to 100 ft. (31 M). For wire lengths over 100 ft., use AWG No. 16 wire.

The 24-V circuit contains an automotive-type, 3-amp. fuse located on the control. Any direct shorts during installation, service, or maintenance could cause this fuse to blow. If fuse replacement is required, use ONLY a 3-amp. fuse of identical size (see Fig. 42).

ACCESSORIES

1. Electronic Air Cleaner (EAC)
   Connect an accessory Electronic Air Cleaner (if used) using 1/4-in female quick connect terminals to the two male 1/4-in quick-connect terminals on the control board marked EAC and NEUTRAL. The terminals are rated for 115 VAC, 1.0 amps maximum and are energized during blower motor operation.
2. Humidifier (HUM)
   Connect an accessory 24 VAC, 0.5 amp. maximum humidifier (if used) to the 1/4-in male quick-connect HUM terminal and COM-24V screw terminal on the control board thermostat strip. The HUM terminal is energized when the pressure switch closes during a call for heat (See Fig. 42)

NOTE: DO NOT connect furnace control HUM terminal to HUM (humidifier) terminal on humidity sensing thermostat, zone controller or similar device. See humidity sensing thermostat, zone controller, thermostat, or controller manufacturer's instructions for proper connection.

NOTE: For 24V & 115V EAC or Humidifier Accessory details, see Accessory instructions.

Alternate Power Supplies

This furnace is designed to operate on utility generated power which has a smooth sinusoidal waveform. If the furnace is to be operated on a generator or other alternate power supply, the alternate power supply must produce a smooth sinusoidal waveform for compatibility with the furnace electronics. The alternate power supply must generate the same voltage, phase, and frequency (Hz) (Table 13) or the furnace rating plate.

Power from an alternate power supply that is non-sinusoidal may damage the furnace electronics or cause erratic operation.

Contact the alternate power supply manufacturer for specifications and details.

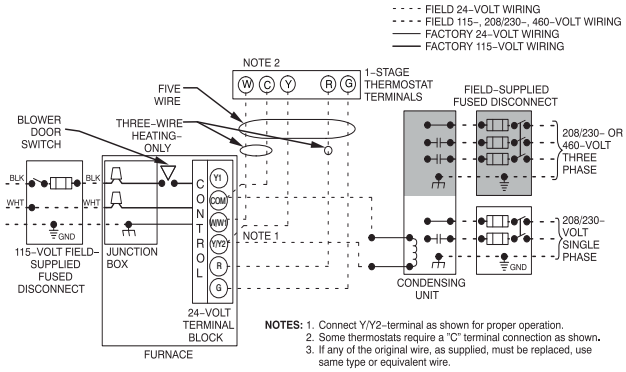

Fig. 41 – Typical Single-Stage Wiring Diagram

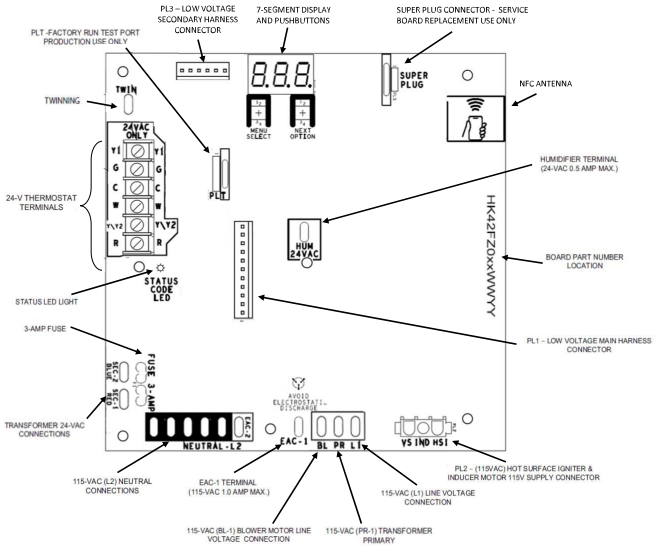

Fig. 42 – Example of Single Stage Furnace Control

Table 13 – Electrical Data

FURNACE SIZE	VOLTS-HERTZ-PHASE	OPERATING VOLTAGE RANGE*		MAXIMUM UNIT AMPS	UNIT AMPACITY†	MINIMUM WIRE SIZE AWG	MAXIMUM WIRE LENGTH FT (M)‡	MAXIMUM FUSE OR CKT BKR AMPS**
		Maximum	Minimum					
36040B	115-60-1	127	104	8.8	11.5	14	32 (9.8)	15
48060B	115-60-1	127	104	11.5	14.8	14	25 (7.6)	15
60080C	115-60-1	127	104	13.8	17.7	12	32 (9.9	20
60100C	115-60-1	127	104	13.8	17.7	12	32 (9.9)	20

*. Permissible limits of the voltage range at which the unit operates satisfactorily.
†. Unit ampacity = 125 percent of largest operating component's full load amps plus 100 percent of all other potential operating components' (EAC, humidifier, etc.) full load amps.
‡. Length shown is as measured one way along wire path between furnace and service panel for maximum 2 percent voltage drop.
**. Time-delay type is recommended.

VENTING

WARNING

CARBON MONOXIDE POISONING HAZARD

Failure to follow the steps outlined below for each appliance connected to the venting system being placed into operation could result in carbon monoxide poisoning or death.

The following steps shall be followed for each appliance connected to the venting system being placed into operation, while all other appliances connected to the venting system are not in operation:

- Seal any unused openings in venting system.
- Inspect the venting system for proper size and horizontal pitch, as required in the National Fuel Gas Code, ANSI Z223.1/NFPA 54 or the CSA B149 Natural Gas and Propane Installation Code and these instructions. Determine that there is no blockage or restriction, leakage, corrosion and other deficiencies, which could cause an unsafe condition.
- As far as practical, close all building doors and windows and all doors between the space in which the appliance(s) connected to the venting system are located and other spaces of the building.
- Close fireplace dampers.
- Turn on clothes dryers and any appliance not connected to the venting system. Turn on any exhaust fans, such as range hoods and bathroom exhausts, so they are operating at maximum speed. Do not operate a summer exhaust fan.
- Follow the lighting instructions. Place the appliance being inspected into operation. Adjust the thermostat so appliance is operating continuously.
- Test for spillage from draft hood equipped appliances at the draft hood relief opening after 5 minutes of main burner operation. Use the flame of a match or candle.
- If improper venting is observed during any of the above tests, the venting system must be corrected in accordance with the National Fuel Gas Code, ANSI Z223.1/NFPA 54 and/or CSA B149.1 Natural Gas and Propane Installation Code.
- After it has been determined that each appliance connected to the venting system properly vents when tested as outlined above, return doors, windows, exhaust fans, fireplace dampers and any other gas-fired burning appliance to their previous conditions of use.

NOTE: Planning for the venting system should be done in conjunction with planning for the ductwork, drainage, and furnace accessories, such as air cleaners and humidifiers. Begin assembling the venting system **AFTER** the furnace is set in place in the required orientation.

Venting for this furnace shall follow all Local codes for Category IV venting systems. This furnace is CSA approved for venting with PVC/ABS DWV venting systems. This furnace is also CSA approved for venting with M&G DuraVent®PolyPro® or Centrotherm InnoFlue® polypropylene venting systems using single wall straight and flex, and required fittings (elbows, reducers, increasers, connectors, adapters) only.

NOTE: THESE INSTRUCTIONS **DO NOT** CONTAIN DETAILED INSTALLATION INSTRUCTIONS FOR POLYPROPYLENE VENTING SYSTEMS. Refer to the polypropylene venting system manufacturer's installation instructions for the polypropylene venting system installation.

NOTE: When using polypropylene venting systems, all venting materials used, including the vent terminations, must be from the same manufacturer.

WARNING

CARBON MONOXIDE POISONING HAZARD

Failure to follow the instructions outlined below for each appliance being placed into operation could result in carbon monoxide poisoning or death.

For all venting configurations for this appliance and other gas appliances placed into operation for this structure, provisions for adequate combustion, ventilation, and dilution air must be provided in accordance with:

Current edition of Section 9.3 ANSI Z223.1/NFPA 54, Air for Combustion and Ventilation and applicable provisions of the local building codes.

General

If this furnace replaces a furnace that was connected to a vent system or chimney, the vent or vent connectors of other remaining appliances may need to be re-sized. Vent systems or vent connectors of other appliances must be sized to the minimum size as determined using appropriate table found in the current edition of National Fuel Gas Code NFPA 54/ANSI Z-223.1.

An abandoned masonry chimney may be used as a raceway for properly insulated and supported combustion-air (when applicable) and vent pipes. Each furnace must have its own set of combustion-air and vent pipes and be terminated individually for Direct Vent (2-Pipe) system (see Fig. 43), for single-pipe or ventilated combustion air option (see Fig. 44).

A furnace shall not be connected to a chimney flue serving a separate appliance designed to burn solid fuel.

Other gas appliances with their own venting system may also use the abandoned chimney as a raceway providing it is permitted by local code, the current edition of the National Fuel Gas Code, and the vent or liner manufacturer's installation instructions. Care must be taken to prevent the exhaust gases from one appliance from contaminating the combustion air of other gas appliances.

Do not take combustion air from inside the chimney when using ventilated combustion air or single-pipe vent option.

These furnaces can be vented as direct-vent (two-pipe), ventilated combustion air or non-direct (single-pipe) vent system. Each type of venting system is described below. Common venting between these furnaces or other appliances is prohibited.

Materials

Combustion air and vent pipe, fittings, primers, and solvents must conform to American National Standards Institute (ANSI) standards and American Society for Testing and Materials (ASTM) standards. For approved materials for use in the U.S.A. (Table 15). This furnace is also CSA approved for venting with M&G DuraVent®PolyPro® or Centrotherm InnoFlue® polypropylene venting systems using single wall straight and flex, and required fittings (elbows, reducers, increasers, connectors, adapters) only.

NOTE: When using polypropylene venting systems, all venting materials used, including the vent terminations must be from the same manufacturer.

Table 14 – Vent Termination Kit for Direct Vent (2-pipe) Systems

Vent and Combustion Air Pipe Diameters	Approved Two-Pipe Termination Fittings					Allowable Concentric Vent Kit	Concentric Vent Kit
	1 1/2-in. (38 mm)	2-in. (51 mm)	2 1/2-in. (64 mm)	3-in. (76-mm)	4-in. (102 mm)		
1 1/2-in. (38 mm)	No	Yes	No	No	No	2-in. (51 mm)	KGAVT0701CVT
2-in. (51 mm)	No	Yes	No	No	No	2-in. (51 mm)	KGAVT0701CVT
2 1/2-in. (64 mm)	No	No	No	Yes	No	2-in. (51 mm) 3-in. (76 mm)	KGAVT0701CVT KGAVT0801CVT
3-in. (76-mm)	No	No	No	Yes	No	3-in. (76 mm)	KGAVT0801CVT
4-in. (102 mm)	No	No	No	Yes	Yes	3-in. (76 mm)	KGAVT0801CVT

Table 15 – Approved Combustion-Air and Vent Pipe, Fitting and Cement Materials (U.S.A. Installations)

MATERIALS

USA	1. All pipe*, fittings*, primers**, and solvents** must conform to American National Standards Institute (ANSI) standards and American Society for Testing and Materials (ASTM) standards 2. See Table below for approved materials for use in the U.S.A. 3. UL 1738 vent systems must be composed of pipe*, fittings**, cements, and primers** from the same supplier.					
Material	**Description**	**Type**	**ASTM / ULC / UL Specification**			
			Pipe*	**Fittings***	**Solvents/Primers****	**Cements**
PVC	Pressure Pipe	Schedule 40	D1785 / UL 1738	D2466 or D2665	F656	D2564
	DWV	Schedule 40	D1785 / D2665			
	SDR 26	N/A	D2241			
	SDR 21	N/A	D2241			
	IPEX	Schedule 40	ULC S636	ULC S636	ULC S636	ULC S636
	Royal Pipe	Schedule 40	ULC S636	ULC S636	ULC S636	ULC S636
ABS	ABS	Schedule 40	D2661	D2468	Clear Cleaner For ABS†	D2235
	DWV-IPS Sizes	Schedule 40	D2661	D2661		
CPVC	Pressure Pipe	Schedule 40	F441	F438	F656	F493
	SDR	N/A	F442	N/A		
	IPEX	Schedule 40	ULC S636	ULC S636	ULC S636	ULC S636
	Royal Pipe	Schedule 40	ULC S636	ULC S636	ULC S636	ULC S636
* PVC and ABS pipe may use either DWV or pressure rated fittings. ** Colored or tinted solvents or primers must be used where required by code in the USA † ABS plastic does not require a primer before solvent cementing. A cleaner for ABS is recommended to remove any surface residue. ABS cleaners are not subject to ASTM standards.						
Polypropylene	Approved Manufacturer				Solvents Primers	Cements
Poly Pro®	M & G Dura Vent				Not Permitted	
Innoflue®	Centrotherm				Not Permitted	
ECCO Polypropylene Vent®	ECCO Manufacturing				Not Permitted	

NOTE: Polypropylene vent systems are UL – 1738 and ULC S636 listed and assembled using mechanical fastening systems supplied by the vent manufacturer.

Venting Systems

Direct Vent / 2-Pipe System

NOTICE

RECOMMENDED SUPPORT FOR VENT TERMINATION

It is recommended that sidewall vent terminations of over 24 inches (0.6 M) in length or rooftop vent terminations of over 36 inches (1 M) in length be supported by EITHER the factory accessory vent termination kit or field-supplied brackets or supports attached to the structure. A factory accessory vent termination kit may be used for direct vent terminations. Termination kits are available for 2-in. or 3-in. pipe. For available options (Table 14.)

In a direct-vent (2-pipe) system, all air for combustion is taken directly from outdoor atmosphere, and all flue products are discharged to outdoor atmosphere. Combustion-air and vent pipes must terminate together in the same atmospheric pressure zone, either through the roof (preferred) or a sidewall. For references to clearances required by National code authorities (see Fig. 46).

NOTICE

OPTIONAL CONFIGURATION FOR COMBUSTION AIR INLET PIPE

In applications where there is a risk of excessive moisture entering the combustion air inlet pipe, a moisture trap may be added to the inlet pipe to help prevent moisture from entering the furnace from the combustion air inlet pipe. (see Fig. 52)

When sizing venting systems, the equivalent length of the optional inlet pipe moisture trap must be taken into account.

Ventilated Combustion Air Systems

In a ventilated combustion air option, the vent terminates and discharges the flue products directly to the outdoors similar to a direct vent system. References to clearances required by National code authorities (see Fig. 47)

All air for combustion is piped directly to the furnace from a space that is well ventilated with outdoor air (such as an attic or crawl space) and the space is well isolated from the living space or garage. Combustion air requirements for this option are the same as the requirements for providing outside air for combustion for a single pipe vent system. Refer to the "Air For Combustion and Ventilation" Section.

Non-Direct Vent (1-pipe) System

In a non direct-vent (1-pipe) system, all air for combustion is taken from the area adjacent to furnace, and all flue products are discharged to outdoor atmosphere. Air for combustion must be supplied as described in the Air For Combustion and Ventilation Section. Do not use an abandoned chimney to supply outside air to the furnace. References to vent clearances required by National code authorities (see Fig. 47).

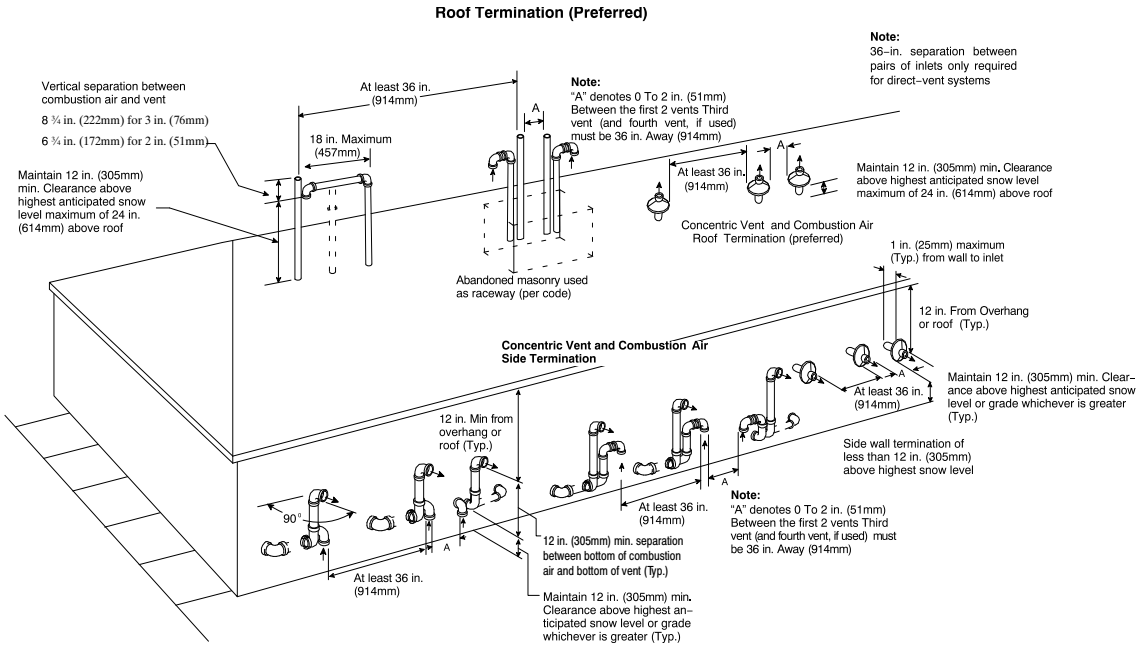

Fig. 43 – Combustion Air and Vent Pipe Termination for Direct Vent (2-Pipe) System

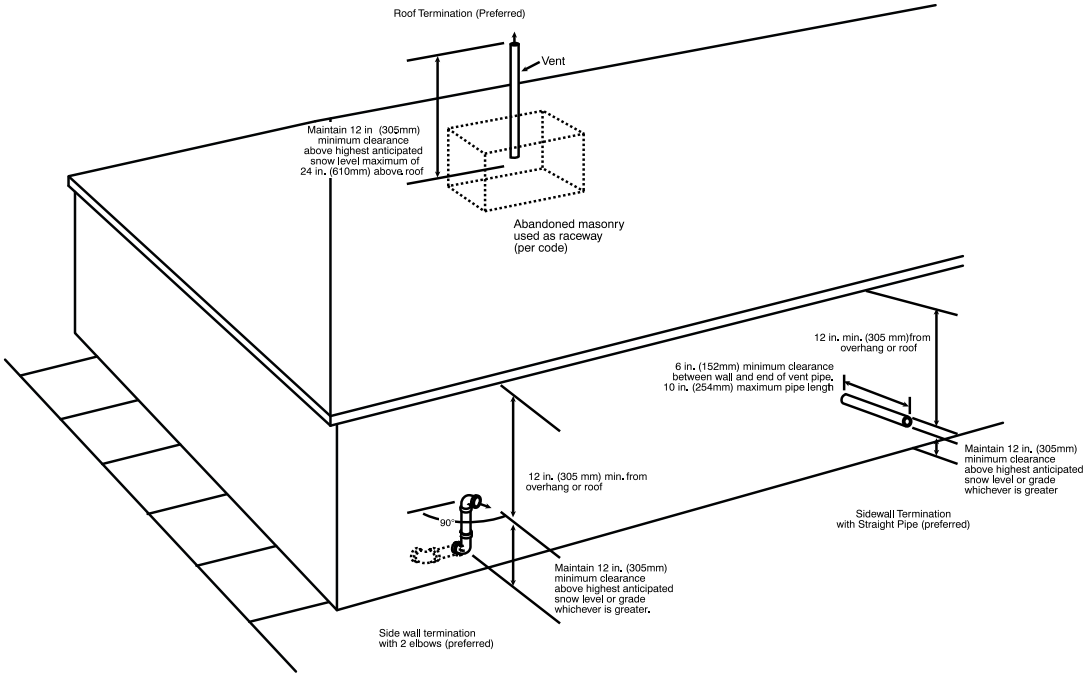

Fig. 44 – Vent Pipe Termination for Non-Direct Vent and Ventilated Combustion Air System

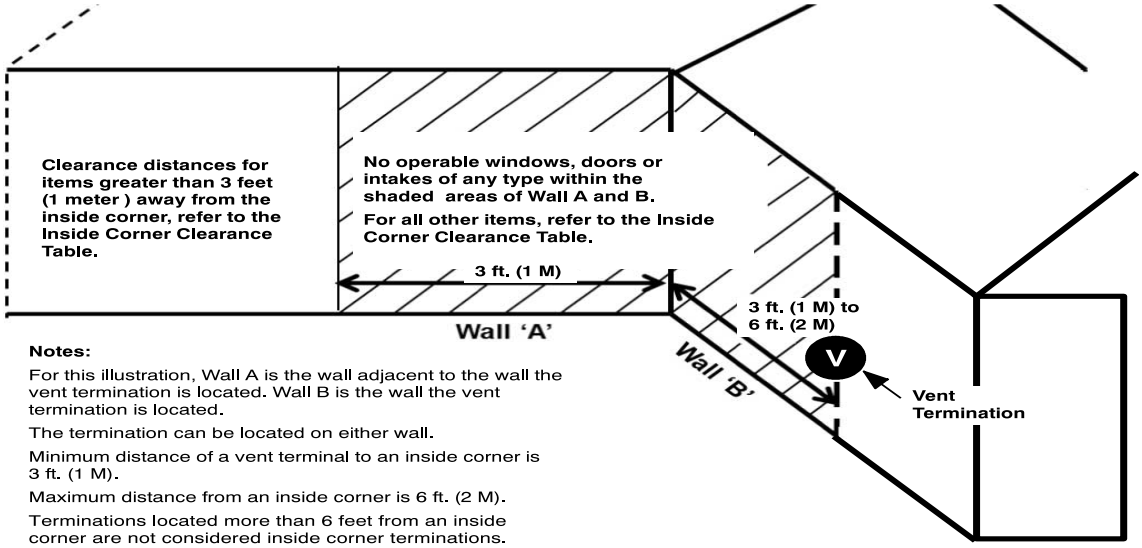

A190032

Fig. 45 – Inside Corner Termination

Inside Corner Terminations

Inside corner vent terminations are permitted provided that:

- Only two exterior walls come together to form an angle of 90 degrees to 135 degrees. There are no other exterior walls attached to either wall to form an alcove.
- The clearance distances apply when the vent is at least 3 feet (1 meter) from, but not more than 6 feet (2 meters) away from an inside corner.
- For vent terminations located more than 6 feet (2 meters) from an inside corner, refer to the appropriate Direct Vent Clearance Table for all two pipe terminations or Non-Direct Vent Clearance Table for all single pipe terminations.
- The clearance distances to items between the vent termination and the outside corner, refer to the appropriate Direct Vent Clearance Table for all two pipe terminations or Non-Direct Vent Clearance Table for all single pipe terminations.

For clearance distances when vent termination is located more than 6 ft. (2 M) away from an inside corner, refer to the appropriate Direct Vent or Non-Direct Vent Clearance Table.	
Clearance description when termination is at least 3 ft. (1 M) away and not more than 6 ft. (2 M) away from an inside corner.	
Clearance above grade, veranda, porch, deck, balcony or anticipated snow level	12-in. (305 mm)
Clearance to a permanently closed window on either Wall A or Wall B	12-in. (305 mm)
Vertical clearance to a soffit located above the vent termination within a horizontal distance of 2 ft. (61 cm) from the centerline of the vent termination	6 ft. (2 M)
Clearance to a ventilation exhaust (including HRV/ERV) on either Wall A or Wall B	12-in. (305 mm)
Clearance above paved sidewalk or paved driveway located on public property	7 ft. (2.1 M)
Clearance under a veranda, porch, deck, or balcony	N.P.*
No operable windows, doors or intakes of any type are permitted on Wall B between the vent termination and the inside corner when the vent termination is at least 3 ft. (1 M) away and not more than 6 ft. (2 M) away from an inside corner.	
The following items on Wall A must be located at least 3 ft. (1 M) away from the inside corner when a vent termination is located on Wall B and the vent termination is at least 3 ft. (1 M) away or not more than 6 ft. (2 M) away from an inside corner.	
A window or door that may be opened	
The centerline extended above electrical meter or gas service regulator assembly	
A service regulator vent outlet	
The centerline of a dryer or water heater vent, or other appliance's vent intake	
A non-mechanical air supply inlet	
Clearance distances shown for Wall A are measured horizontally from the exit of the termination on Wall B to the closest edge of the item shown below.	
Clearance to a mechanical air supply (including HRV/ERV) inlet unless termination is 3 ft. (1 M) above the horizontal line of the intake	10 ft. (3 M)
For clearance distances from a vent termination to the outside corner of the wall, refer to the appropriate Direct Vent or Non-Direct Vent Clearance Table	
*N.P. = Not Permitted *N/A = Not Applicable	

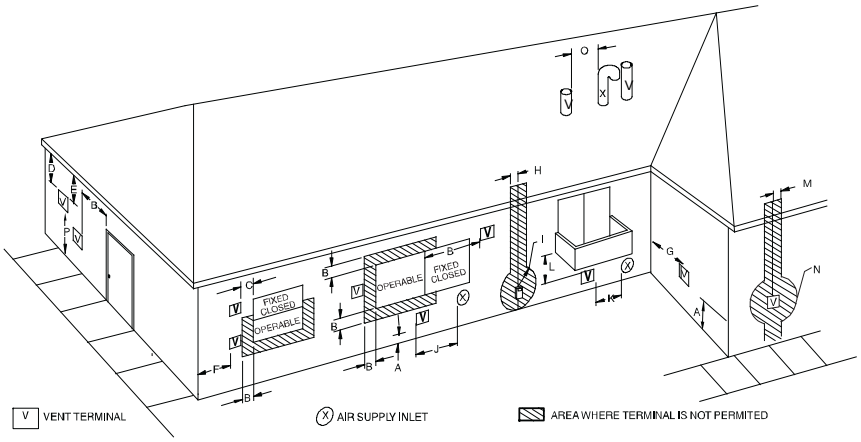

A12326

Fig. 46 – Direct Vent Termination Clearance

NOTE: The following is based upon National codes for gas appliances and is provided as a reference. Refer to local codes which may supersede these standards and/or recommendations.

Item	Clearance Description	Canadian Installations (1) (per CAN/CSA B149.1)	U.S. Installations (2) (per ANSI Z223.1/NFPA 54)
A	Clearance above grade, veranda, porch, deck, balcony or anticipated snow level	12 in. (305 mm) 18 in. (457 mm) above roof surface.	12 in. (305 mm)
B	Clearance to a window or door that may be opened	12 in. (305 mm) for appliances >10,000 BTUh (3 kW) and </=100,000 BTUh (30 kW), 36 in. (914 mm) for appliances >100,000 BTUh (30 kW)	9 in. (229 mm) for appliances >10,000 BTUh (3 kW) and </= 50,000 BTUh (15 kW), 12 in. (305 mm) for appliances >50,000 BTUh (15kW)
C	Clearance to a permanently closed window	For clearances not specified in ANSI Z223.1/NFPA 54 or CAN/CSA B149.1, clearances shall be in accordance with local installation codes and the requirements of the gas supplier and the manufacturer's installation instructions. Manufacturer's Recommendation: See Notes 3-8.	
D	Vertical clearance to a ventilated soffit located above the terminal within a horizontal distance of 2 feet (61 cm) from the centerline of the terminal		
E	Clearance to an unventilated soffit		
F	Clearance to an outside corner		
G	Clearance to an inside corner		
H	Clearance to each side of the centerline extended above electrical meter or gas service regulator assembly	3 ft. (.9 M) within 15 ft. (4.6 M) above the meter/regulator assembly.	3 ft. (.9 M) within 15 ft. (4.6 M) above the meter/regulator assembly.
I	Clearance to service regulator vent outlet	3ft. (.9 M)	See Note 4.
J	Clearance to non—mechanical air supply inlet to building or the combustion air inlet to any other appliance	12 in. (305 mm) for appliances >10,000 Btuh(3 kW) and </= 100,000 BTUh (30 kW), 36 in. (914 mm) for appliances >100,000 BTUh (30 kW)	9 in. (9 mm) for appliances >10,000 BTUh (3 kW) and </= 50,000 BTUh (15 kW), 12 in.(305 mm) for appliances >50,000 BTUh (15kW)
K	Clearance to a mechanical air supply inlet	6 ft. (1.8 M)	3ft. (.9 M) above if within 10 ft. (3 M) horizontally
L	Clearance under a veranda, porch, deck, or balcony	12 in. (305 mm). Permitted only if veranda, porch, deck, or balcony is fully open on a minimum of two sides beneath the floor.	See Note 4. Manufacturer's Recommendation: See Notes 3-8.
M	Clearance to each side of the centerline extended above or below vent terminal of the furnace to a dryer or water heater vent, or other appliance's vent intake or exhaust	12 in. (305 mm)	12 in. (305 mm)
N	Furnace combustion air intake clearance to a water heater vent, dryer vent or other types of appliance exhaust.	3 ft. (.9 M)	3 ft. (.9 M)
0	Clearance from a plumbing vent stack	3 ft. (.9 M)	3 ft. (.9 M)
P	Clearance above or adjacent to paved sidewalk or paved driveway located on public property	7 ft. (2.1 M) Vent shall not terminate above or adjacent to a sidewalk or paved driveway that is located between two single family dwellings and serves both dwellings.	See Note 4. Manufacturer's Recommendation: See Notes 3-8.

> greater than, ≥ greater than or equal to, < less than, ≤ less than or equal to

NOTE:

1. In accordance with the current CAN/CSA B149.1, Natural Gas and Propane Installation Code.
2. In accordance with the current ANSI Z223.1/NFPA 54, National Fuel Gas Code
3. **NOTE: This table is based upon National codes for gas appliances, and are provided as a reference.**

Refer to Local codes which may supersede these standards and/or recommendations.

4. For clearances not specified in ANSI Z223.1/NFPA 54 or CAN/CSA B 149.1, clearances shall be in accordance with local installation codes and the requirements of the gas supplier and the manufacturer's installation instructions.
5. When locating vent terminations, consideration must be given to prevailing winds, location, and other conditions which may cause recirculation of the combustion products of adjacent vents. Recirculation can cause poor combustion, inlet condensate problems, vent termination icing, and/or accelerated corrosion of the heat exchangers.
6. Design and position vent outlets to avoid ice build-up on and moisture damage to surrounding surfaces.
7. The vent for this appliance shall not terminate:
   a. Near soffit vents of crawl space vents or other areas where condensate or vapor could create a nuisance or hazard or property damage; or
   b. Where condensate vapor could cause damage or could be detrimental to the operation of regulators, relief valves, or other equipment.
8. Avoid venting under a deck or large overhang. Recirculation could occur and cause performance or system problems. Ice build-up may occur.

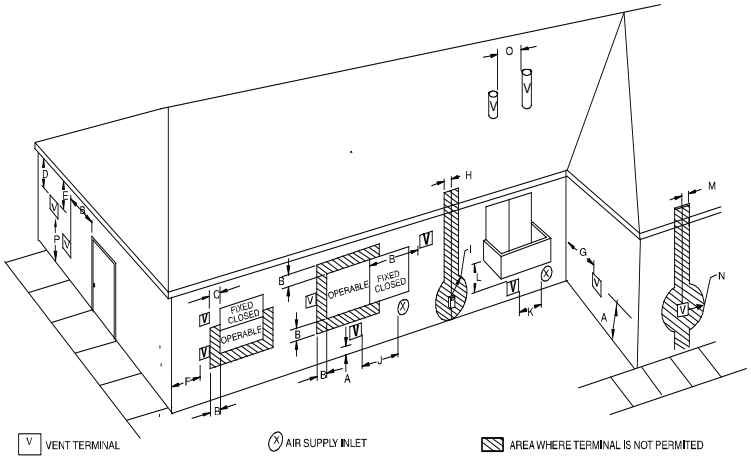

A12325

Fig. 47 – Ventilated Combustion Air and Non-Direct Vent Termination Clearance

NOTE: The following is based upon National codes for gas appliances and is provided as a reference.
Refer to local codes which may supersede these standards and/or recommendations.

Item	Clearance Description	Canadian Installations (1) (per CAN/CSA B149.1)	U.S. Installations (2) (per ANSI Z223.1/NFPA 54)
A	Clearance above grade, veranda, porch, deck, balcony or anticipated snow level	12 in. (305 mm) 18 in. (457 mm) above roof surface.	12 in. (305 mm)
B	Clearance to a window or door that may be opened	12 in. (305 mm) for appliances >10,000 BTUh (3 kW) and </=100,000 BTUh (30 kW), 36 in. (914 mm) for appliances >100,000 BTUh (30 kW)	4ft. (1.2M) below or to the side of the opening, 1 ft (.3M) above the opening. Manufacturer's Recommendation: See Note 8.
C	Clearance to a permanently closed window	For clearances not specified in ANSI Z223.1/NFPA 54 or CAN/CSA B149.1, clearances shall be in accordance with local installation codes and the requirements of the gas supplier and the manufacturer's installation instructions. Manufacturer's Recommendation: See Notes 3-8.	
D	Vertical clearance to a ventilated soffit located above the terminal within a horizontal distance of 2 feet (61 cm) from the centerline of the terminal		
E	Clearance to an unventilated soffit		
F	Clearance to an outside corner		
G	Clearance to an inside corner		
H	Clearance to each side of the centerline extended above electrical meter or gas service regulator assembly	3 ft. (.9 M) within 15 ft. (4.6 M) above the meter/regulator assembly.	3 ft. (.9 M) within 15 ft. (4.6 M) above the meter/regulator assembly.
I	Clearance to service regulator vent outlet	3ft. (.9 M)	See Note 4.
J	Clearance to non—mechanical air supply inlet to building or the combustion air inlet to any other appliance	12 in. (305 mm) for appliances >10,000 Btuh(3 kW) and </= 100,000 BTUh (30 kW), 36 in. (914 mm) for appliances >100,000 BTUh (30 kW)	4ft. (1.2M) below or to the side of the opening, 1 ft (.3M) above the opening. Manufacturer's Recommendation: See Note 8
K	Clearance to a mechanical air supply inlet	6 ft. (1.8 M)	3ft. (.9 M) above if within 10 ft. (3 M) horizontally
L	Clearance under a veranda, porch, deck, or balcony	12 in. (305 mm). Permitted only if veranda, porch, deck, or balcony is fully open on a minimum of two sides beneath the floor.	See Note 4. Manufacturer's Recommendation: See Notes 3-8.
M	Clearance to each side of the centerline extended above or below vent terminal of the furnace to a dryer or water heater vent, or other appliance's direct vent intake or exhaust	12 in. (305 mm)	12 in. (305 mm)
N	Clearance to a moisture exhaust duct (dryer vent, spa exhaust, etc.)	12 in. (305 mm) See Note 4	12 in. (305 mm) See Note 4
0	Clearance from a plumbing vent stack	3 ft. (.9 M)	3 ft. (.9 M)
P	Clearance above or adjacent to paved sidewalk or paved driveway located on public property	7 ft. (2.1 M). Vent shall not terminate above or adjacent to a sidewalk or paved driveway that is located between two single-family dwellings and serves both dwellings.	7ft. (2.1M)

> greater than, ≥ greater than or equal to, < less than, ≤ less than or equal to

NOTE:

1. In accordance with the current CAN/CSA B149.1, Natural Gas and Propane Installation Code.
2. In accordance with the current ANSI Z223.1/NFPA 54, National Fuel Gas Code
3. NOTE: This table is based upon National codes for gas appliances, and are provided as a reference.

Refer to Local codes which may supersede these standards and/or recommendations.

4. For clearances not specified in ANSI Z223.1/NFPA 54 or CAN/CSA B 149.1, clearances shall be in accordance with local installation codes and the requirements of the gas supplier and the manufacturer's installation instructions.
5. When locating vent terminations, consideration must be given to prevailing winds, location, and other conditions which may cause recirculation of the combustion products of adjacent vents. Recirculation can cause poor combustion, inlet condensation problems, vent termination icing, and/or accelerated corrosion of the heat exchangers.
6. Design and position vent outlets to avoid ice build-up on and moisture damage to surrounding surfaces.
7. The vent for this appliance shall not terminate:
   a. Near soffit vents of crawl space vents or other areas where condensate or vapor could create a nuisance or hazard or property damage; or
   b. Where condensate vapor could cause damage or could be detrimental to the operation of regulators, relief valves, or other equipment.
8. These National standards apply to all non-direct-vent gas appliances. Contact Local code officials for additional requirements and/or exclusions.

NOTE: The vent for this appliance must not terminate over public walkways; or near soffit vents or crawl space vents or other areas where condensate or vapor could create a nuisance or hazard or cause property damage; or where condensate vapor could cause damage or could be detrimental to the operation of regulators, relief valves, or other equipment.

Locating the Vent Termination

General

Combustion-air inlet pipe (direct vent/2-pipe system only) and vent pipe must terminate outside structure, either through sidewall or roof.

Special termination requirements may be required in other Canadian provinces. Refer to the authority having jurisdiction for clarification and/or additional clearance requirements.

⚠ WARNING

CARBON MONOXIDE POISONING HAZARD

Failure to follow the instructions outlined below for each appliance being placed into operation could result in carbon monoxide poisoning or death.

The instructions included with this furnace **DO NOT APPLY** to vent systems that are located below the furnace. **CAREFULLY FOLLOW THE INSTRUCTIONS PROVIDED WITH THE EXTERNAL VENT TRAP KIT FOR LAYING OUT THE VENTING SYSTEM AND THE DRAIN SYSTEM** when all or part of the venting system is placed below the furnace.

For vent termination clearance, references to National codes for Direct Vent/2-Pipe system (see Fig. 46) and for Ventilated Combustion Air/Non-direct Vent/1-Pipe system (see Fig. 47). For exterior termination arrangements, for Direct Vent/2-Pipe system (see Fig. 43) and for Ventilated Combustion Air/Non-Direct/1-Pipe system (see Fig. 44). Contact Local code authorities for other requirements to and/or exemptions from the National codes shown in the figures.

Roof termination is often preferred since it is less susceptible to damage or contamination, is usually located away from adjacent structures, is less prone to icing conditions, and it often has less visible vent vapors. Sidewall terminations may require sealing or shielding of building surfaces with a corrosive resistance material due to the corrosive properties of combustion products from the vent system, as well as protection of adjacent structures.

Roof termination is the recommended termination location. Roof terminations provide better performance against sustained prevailing winds. The roof location is preferred since the vent and combustion air system is less susceptible to damage or contamination. The termination is usually located away from adjacent structures or other obstacles such as inside corners, windows, doors or other appliances. It is less prone to icing conditions, and it often has less visible vent vapors.

Sidewall terminations may require sealing or shielding of building surfaces with a corrosive resistance material due to the corrosive properties of combustion products from the vent system, as well as protection of adjacent structures.

⚠ NOTICE

RECOMMENDED SUPPORT FOR VENT TERMINATIONS

It is recommended that sidewall vent terminations in excess of 24 inches (0.6 M) or rooftop terminations in excess of 36 inches (1 M) in vertical length be supported by **EITHER** the Direct Vent Termination Kit (Table 14) or by field-supplied brackets or supports fastened to the structure.

When determining appropriate location for termination, consider the following guidelines:

1. Comply with all clearance requirements stated (see Fig. 46 or Fig. 47) per application.
2. The vent termination must be located at least 3 feet from an inside corner and follow the clearance distances in the Inside Corner Termination drawing.
3. Termination or termination kit should be positioned where vent vapors will not damage plants/shrubs, air conditioning equipment or utility meters.
4. Do not locate termination directly into prevailing winds. Termination should be positioned so that it will not be affected by sustained prevailing winds over 30 mph, wind eddy, such as inside building corners, or by recirculation of flue gases, airborne leaves, or light snow.
5. Termination or termination kit should be positioned where it will not be damaged by or subjected to foreign objects such as stones, balls, etc.
6. Termination or termination kit should be positioned where vent vapors are not objectionable**.**

Direct Vent / 2-Pipe System

Direct vent (2-pipe) vent and combustion air pipes must terminate outside the structure. For references to vent clearances required by National code authorities (see Fig. 46). Allowable vent and combustion air terminations (see Fig. 43).

⚠ WARNING

CARBON MONOXIDE POISONING HAZARD

Failure to follow the instructions outlined below for each appliance being placed into operation could result in carbon monoxide poisoning or death.

For all venting configurations for this appliance and other gas appliances placed into operation for the structure, provisions for adequate combustion, ventilation, and dilution air must be provided in accordance with:

Current edition of Section 9.3 ANSI Z223.1/NFPA 54 Air for Combustion and Ventilation and applicable provisions of the local building codes.

Ventilated Combustion Air

The vent pipe for a Ventilated Combustion Air System must terminate outdoors. For references to vent clearances required by National code authorities (see Fig. 47). Allowable vent terminations (see Fig. 44). The combustion air pipe terminates in a well-ventilated attic or crawl space. Follow the clearances (see Fig. 49).

The combustion air pipe cannot terminate in attics or crawl spaces that use ventilation fans designed to operate in the heating season. If ventilation fans are present in these areas, the combustion air pipe must terminate outdoors as a Direct Vent System.

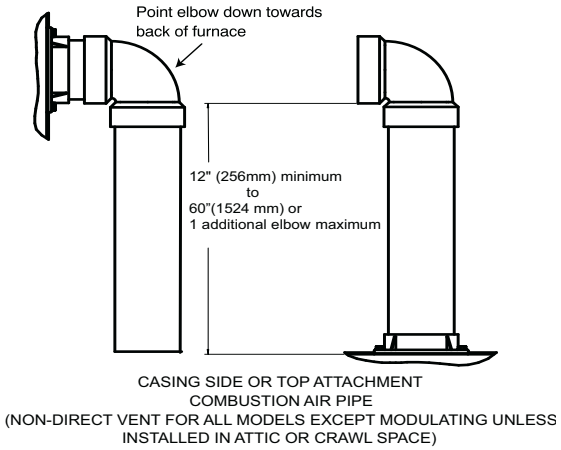

Fig. 48 – Combustion Air Pipe Attachment

Non-Direct Vent / 1-Pipe System

The vent pipe for a Non Direct Vent (1-pipe) system must terminate outdoors. References to vent clearances required by National Code authorities (see Fig. 47). Allowable vent terminations (see Fig. 44).

A combustion air inlet pipe to the outdoors is not required for a Non-Direct (single-pipe) Vent System. A 12-in. long section of pipe with a tight radius 2-in. (51 mm) 90 degree elbow is required to be attached to the furnace. (see Fig. 48) This short inlet air pipe helps to ensure stable combustion, as well as allow for sound attenuation. To aid sound attenuation, point the inlet air pipe away from occupants. An extra elbow and/or five feet of pipe may be used to accomplish the sound attenuation function.

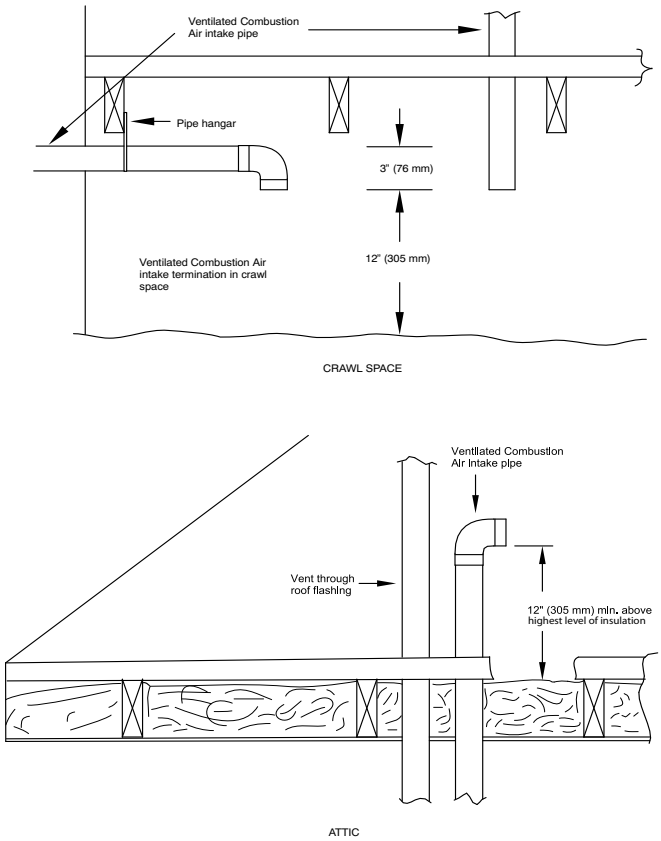

Fig. 49 – Vent Terminations for Ventilated Combustion Air

Size the Vent and Combustion Air Pipes

General

Furnace combustion air and vent pipe connections are sized for 2-in. (50 mm ND) PVC/ABS DWV pipe. The combustion air and vent pipe connections also accommodate 60 mm polypropylene venting systems with outside diameters of approximately 60 mm (2-3/8 inches). Any pipe diameter change should be made outside furnace casing in vertical pipe. Any change in diameter to the pipe must be made as close to the furnace as reasonably possible (see Fig. 51).

The Maximum Vent Length for the vent and combustion air pipe (when used) is determined from the Maximum Equivalent Vent Length (Table 16) minus the number of fittings multiplied by the deduction for each type of fitting used (Table 17).

⚠ NOTICE

OPTIONAL CONFIGURATION FOR COMBUSTION AIR INLET PIPE

In applications where there is a risk of excessive moisture entering the combustion air inlet pipe, a moisture trap may be added to the inlet pipe to help prevent moisture from entering the furnace from the combustion air inlet pipe. (see Fig. 52).

When sizing venting systems, the equivalent length of the optional moisture trap (15 feet/5 M) must be taken into account.

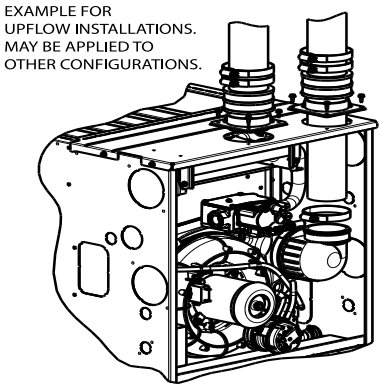

Representative drawing only, some models may vary.

Fig. 50 – Sample Inlet Air Pipe Connection for Polypropylene Venting Systems

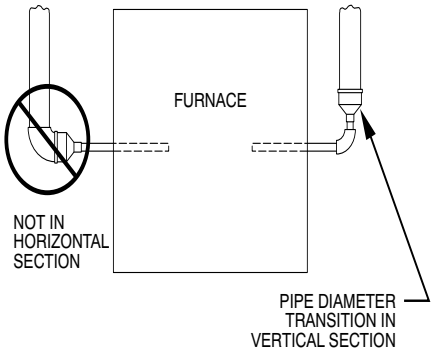

Fig. 51 – Combustion Air and Vent Pipe Diameter Transition Location and Elbow Configuration

Recommended Combustion Air Inlet Moisture Trap

Recommended to prevent moisture from trickling into the furnace vestibule, a trap can be installed in the intake air pipe near the furnace. To prevent moisture, connecting a drain line to the trap is recommended as trace amounts of moisture will evaporate into the intake air stream. If the combustion air inlet is located near a moisture exhaust duct, or there

are other concerns of excessive moisture being drawn into the combustion air inlet, it is encouraged to connect a drain line to the trap.

The trap can be constructed from a running tee of the same diameter of the intake air pipe with **EITHER** a removable cap attached to a 6-inch long pipe connected to the tee or the External Vent Trap Kit to help prevent contaminants from entering the furnace (see Fig. 52).

The External Vent Trap Kit accessory may be used as a trap for the combustion air inlet pipe if a large amount of moisture must be removed. The drain line may be connected to the same drain as the furnace condensate and the evaporator coil condensate line **ONLY** if the inlet air trap drain and the evaporator coil drain empty into an open segment of pipe above the drain. The drain line must be connected downstream of the condensate trap float switch (see Fig. 11). When using the External Vent Trap Kit, refer to those instructions for proper drain connections.

The tee may also be connected to the intake air pipe on the side of the casing (see Fig. 52).

In any configuration, it will be necessary to add the equivalent length of the tee (15 feet/5 M) to the Total Equivalent Vent Length of the venting system.

⚠ NOTICE

ADDITIONAL INFORMATION FOR POLYPROPYLENE VENTING SYSTEMS

Polypropylene venting systems include flexible vent pipe. These flexible vent pipes have a different equivalent vent length than straight sections of PVC/ABS DWV vent pipe. Be sure to make the appropriate deductions from the Maximum Equivalent Vent Length (MEVL), or additions to the Total Equivalent Vent Length (TEVL), when applying flexible vent pipes in polypropylene venting systems. See the polypropylene vent system manufacturer's installation instructions for details.

When using metric-sized venting systems, use these equivalencies for obtaining the proper MEVL from the Tables:

Use 2" Vent Tables for 60 mm (o.d.) vent systems

Use 3" Vent Tables for 80 mm (o.d.) vent systems

Use 4" Vent Tables for 100 mm (o.d.) vent systems

The measured length of pipe used in a single or 2-pipe termination is included in the total vent length. Include deductions from the Maximum Equivalent Vent Length (MEVL) contained in the Venting Tables for elbows and flexible vent pipe. Factory accessory concentric vent terminations or pipe lengths and elbows used for "standard" vent terminations do not require a deduction from the Maximum Equivalent Vent Length. See vent termination figures (Table 16). Include a deduction for a Tee when used for Alberta and Saskatchewan terminations.

NOTE: Polypropylene venting systems MAY require additional deductions from the MEVL, or additions to the TEVL, for vent terminations and flexible pipe sections. See the polypropylene venting system manufacturer's instructions for details on equivalent lengths of vent terminations and flexible vent pipes, and for calculating total vent lengths.

To calculate the Total Equivalent Vent Length (TEVL) of the venting system:

1. Measure the individual distance from the furnace to the termination for each pipe.
2. Count the number of elbows for each pipe.
3. For each pipe, multiply the number of elbows by the equivalent length for the type of elbow used. Record the equivalent length of all the elbows for each pipe.
4. If a Tee is used on the termination (Alberta and Saskatchewan, when required) record the equivalent length of the Tee used.

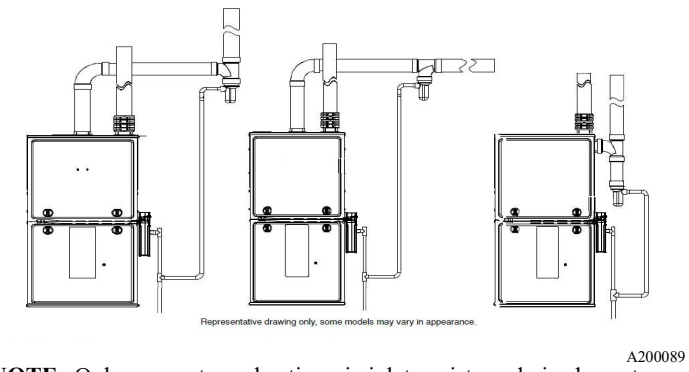

NOTE: Only connect combustion air inlet moisture drain downstream of the furnace trap assembly as shown.

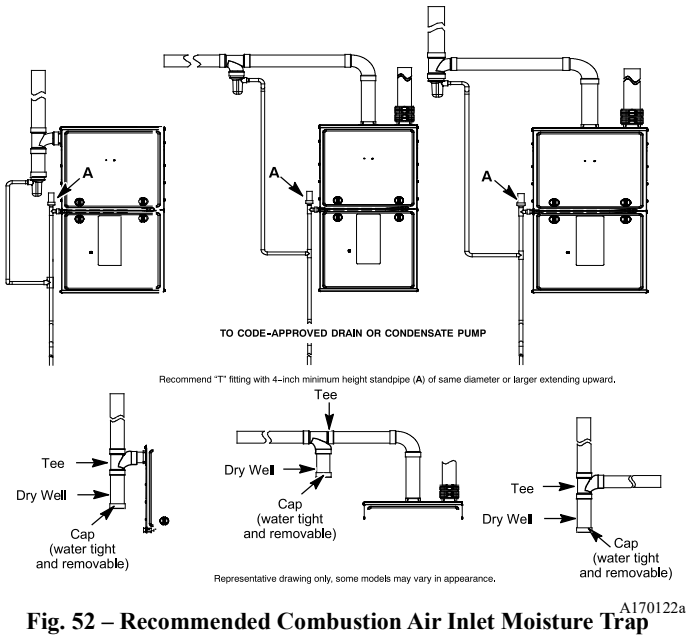

Fig. 52 – Recommended Combustion Air Inlet Moisture Trap

5. Calculate Total Equivalent Vent Length by adding the equivalent lengths of the fittings to the lengths of the individual vent and combustion air pipes.
6. When using polypropylene venting systems with flexible vent pipes, perform adjustments for the equivalent length of the flexible vent pipe to the calculated total equivalent venting system length. See the polypropylene vent system manufacturer's instructions for details.
7. Select a diameter of vent pipe (Table 16) and note the Maximum Equivalent Vent Length (MEVL) shown for that application for that specific furnace input size. Compare the Total Equivalent Vent Length (TEVL) to the MEVL:
8. If the Total Equivalent Vent Length is ***shorter*** than the Maximum Equivalent Vent Length for the diameter of pipe chosen, then that diameter of pipe selected may be used.
9. If the Total Vent Length is ***longer*** than the Maximum Equivalent Vent Length for the diameter of pipe chosen, that diameter pipe MAY NOT be used for venting the furnace. Try the next larger diameter pipe.

NOTE: If the calculated Total Equivalent Vent Lengths results in different diameter pipes for the vent and combustion air, select the larger diameter for both pipes.

NOTE: If the Maximum Vent Length for diameter of the pipe selected is longer than the measured length and the equivalent length of all the fittings and terminations (TEVL), recalculate Total Equivalent Vent Length using the next smaller diameter. If the Maximum Equivalent

Vent Length is still longer than the longer TEVL of the vent pipe or combustion air pipe, then that diameter of pipe selected may be used.

When installing vent systems pipe lengths of 10 ft. (3 M) or less, use the smallest allowable pipe diameter. Using a pipe size greater than required for short venting systems may result in loss of efficiency, incomplete combustion, flame disturbance, or flame sense lockout.

For vent systems longer than 10 ft. (3 M), any larger diameter vent pipe (Table 16) **FOR THAT SIZE FURNACE** may be used.

Table 16 – Maximum Equivalent Vent Length - Ft.

<table>
<tr><th colspan="2">Unit Size</th><th colspan="3">40,000</th><th colspan="4">60,000</th><th colspan="5">80,000</th><th colspan="4">100,000</th></tr>
<tr><th rowspan="7">Altitude (feet)</th><th>Pipe Dia. (in)</th><th>1 ½</th><th>2</th><th>2 ½</th><th>1 ½</th><th>2</th><th>2 ½</th><th>3</th><th>1 ½</th><th>2</th><th>2 ½</th><th>3</th><th>4</th><th>2</th><th>2 ½</th><th>3</th><th>4</th></tr>
<tr><td>0-2000</td><td>40</td><td>155</td><td>185</td><td rowspan="2">20</td><td>100</td><td>175</td><td>200</td><td>15</td><td>55</td><td>130</td><td>175</td><td>200</td><td>20</td><td>80</td><td>175</td><td>200</td></tr>
<tr><td>2001-3000</td><td>35</td><td>150</td><td>175</td><td>95</td><td>165</td><td>185</td><td rowspan="4">10</td><td rowspan="2">49</td><td>125</td><td>165</td><td>185</td><td rowspan="2">15</td><td rowspan="2">75</td><td>165</td><td>185</td></tr>
<tr><td>3001-4000</td><td>30</td><td>135</td><td>160</td><td>16</td><td>90</td><td>155</td><td>175</td><td>115</td><td>155</td><td>175</td><td rowspan="2">155</td><td>175</td></tr>
<tr><td>4001-4500</td><td rowspan="2">25</td><td>130</td><td>155</td><td rowspan="3">15</td><td>85</td><td>150</td><td>170</td><td>44</td><td>110</td><td>150</td><td>165</td><td rowspan="3">10</td><td>70</td><td>170</td></tr>
<tr><td>4501-5000</td><td>125</td><td>145</td><td>80</td><td>145</td><td>165</td><td>44</td><td>110</td><td>145</td><td>160</td><td rowspan="2">65</td><td>150</td><td>165</td></tr>
<tr><td>5001-5400</td><td>20</td><td>120</td><td>130</td><td>75</td><td>140</td><td>155</td><td>41</td><td>100</td><td>135</td><td>150</td><td>140</td><td>155</td></tr>
</table>

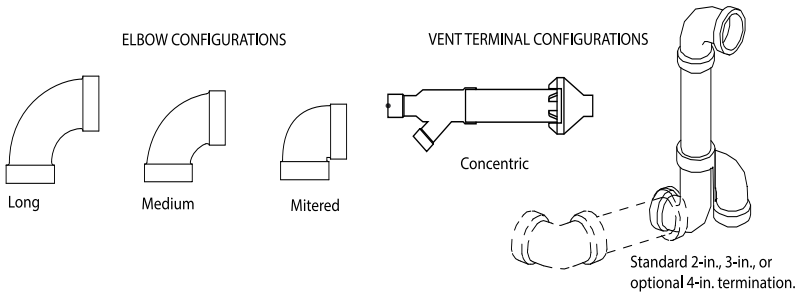

A13110

Table 17 – Deductions from Maximum Equivalent Vent Length - Ft. (M)

Pipe Diameter (in):	1-1/2		2		2-1/2		3		4	
Mitered 90º Elbow	8	(2.4)	8	(2.4)	8	(2.4)	8	(2.4)	8	(2.4)
Medium Radius 90º Elbow	5	(1.5)	5	(1.5)	5	(1.5)	5	(1.5)	5	(1.5)
Long Radius 90º Elbow	3	(0.9)	3	(0.9)	3	(0.9)	3	(0.9)	3	(0.9)
Mitered 45º Elbow	4	(1.2)	4	(1.2)	4	(1.2)	4	(1.2)	4	(1.2)
Medium Radius 45º Elbow	2.5	(0.8)	2.5	(0.8)	2.5	(0.8)	2.5	(0.8)	2.5	(0.8)
Long Radius 45º Elbow	1.5	(0.5)	1.5	(0.5)	1.5	(0.5)	1.5	(0.5)	1.5	(0.5)
Tee	16	(4.9)	16	(4.9)	16	(4.9)	16	(4.9)	16	(4.9)
Concentric Vent Termination	NA		0	(0.0)	NA		0	(0.0)	NA	
Standard Vent Termination	0	(0.0)	0	(0.0)	0	(0.0)	0	(0.0)	0	(0.0)

NOTES:

1. Use only the smallest diameter pipe possible for venting. Over-sizing may cause flame disturbance or excessive vent terminal icing or freeze-up.
2. NA - Not allowed. Pressure transducer will not close, or flame disturbance may result.
3. Vent sizing for Canadian installations over 4500 ft. (1370 M) above sea level are subject to acceptance by the local authorities having jurisdiction.
4. Size both the combustion air and vent pipe independently, then use the larger size for both pipes.
5. Assume the two 45° elbows equal one 90° elbow. Wide radius elbows are desirable and may be required in some cases.
6. Elbow and pipe sections within the furnace casing and at the vent termination should not be included in vent length or elbow count.
7. The minimum pipe length is 5 ft. (2 M) linear feet (meters) for all applications.
8. Use 3-in. (76 mm) diameter vent termination kit for installations requiring 4-in. (102 mm) diameter pipe.

Combustion Air and Vent Piping Insulation Guidelines

NOTE: Use closed cell, neoprene insulation or equivalent.

The vent pipe may pass through unconditioned areas. The amount of exposed pipe allowed (Table 18).

1. Using winter design temperature (used in load calculations), find appropriate temperature for your application and furnace model.
2. Determine the amount of total and exposed vent pipe.
3. Determine required insulation thickness for exposed pipe length(s).
4. When combustion air inlet piping is installed above a suspended ceiling, the pipe **MUST** be insulated with moisture resistant insulation such as Armaflex or other equivalent type of insulation.
5. Insulate combustion air inlet piping when run in warm, humid spaces.
6. Install the insulation per the insulation manufacturer's installation instructions.

NOTE: Pipe length (ft. / M) specified for maximum pipe lengths located in unconditioned spaces cannot exceed total allowable pipe length as calculated (Table 16).

Configure the Furnace

⚠ WARNING

CARBON MONOXIDE POISONING HAZARD

Failure to follow this warning could result in personal injury or death.

To route the vent pipe and combustion air pipe through the furnace, the manufacturer supplied kit must be used. Failure to properly seal the blower compartment from the furnace vestibule could result in the circulation of carbon monoxide throughout the structure. The vent pipe and combustion air pipe must be a continuous pipe while passing through the blower compartment. Seals supplied in this kit must be installed per the instructions provided. Follow all procedures outlined in these instructions.

Near Furnace Vent Connections

Offsets in the vertical portion of the vent pipe should be made with 45 deg. elbows instead of 90 deg. elbows. Short horizontal runs of vent pipe are difficult to pitch correctly and may trap water in the vent pipe. Trapped water in the vent pipe may result in nuisance faults.

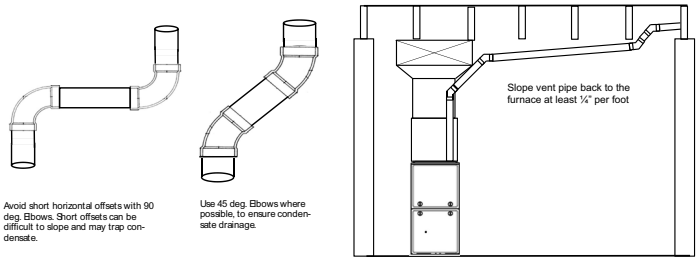

Fig. 53 – Near Furnace Vent Connections

Install the Vent and Combustion Air Pipes

With the furnace installed in the required position, remove the desired knockouts or plugs from the casing. It will be necessary to remove one knockout or plug for the vent pipe and the other knockout or plug for the combustion air connection. (see Fig. 12).

The vent elbow can be rotated to the required location on the casing if necessary (see Fig. 58). To rotate the vent elbow:

1. Loosen the clamp on the inlet of the vent elbow attached to the inducer.
2. Rotate the vent elbow to the required position. There are rounded notches on the vent elbow to align it with the inducer housing for each orientation.
3. Tighten the clamp around the vent elbow. Torque the clamp to 15 lb-in. (see Fig. 54 through Fig. 56).

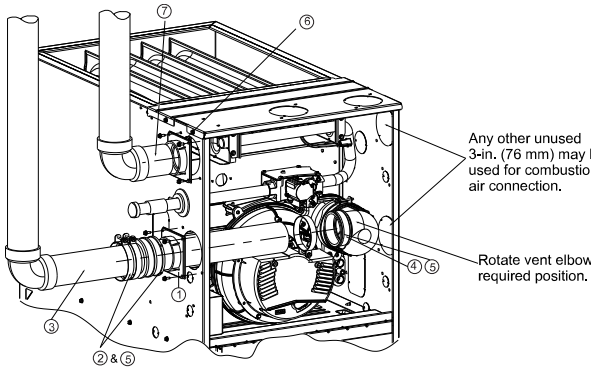

Representative drawing only, some models may vary.

UPFLOW LEFT CONFIGURATION

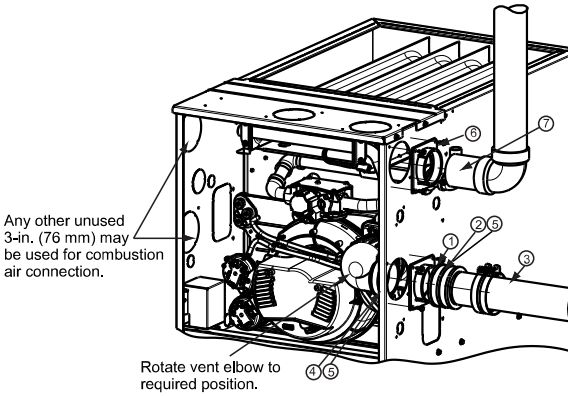

Representative drawing only, some models may vary.

UPFLOW RIGHT CONFIGURATION

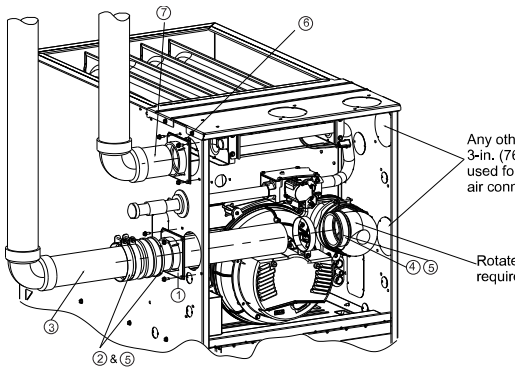

Representative drawing only, some models may vary.

UPFLOW VERTICAL VENT

Fig. 54 – Upflow Configurations (Appearance may vary) See "Notes for Venting Options"

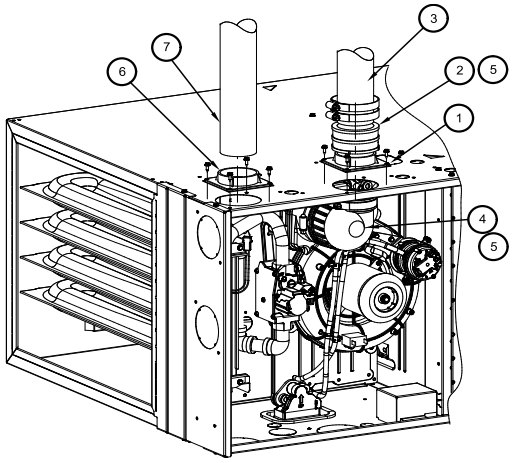

Representative drawing only, some models may vary.

HORIZONTAL LEFT-VERTICAL VENT CONFIGURATION

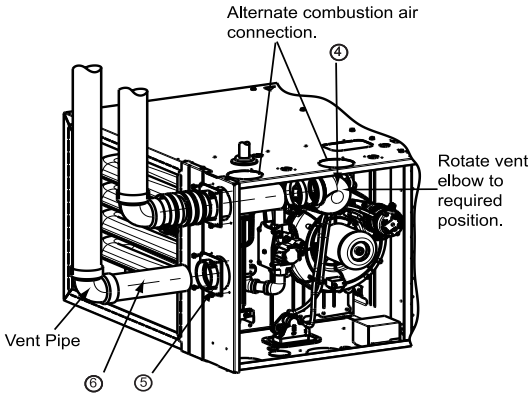

Representative drawing only, some models may vary.

HORIZONAL LEFT-LEFT VENT CONFIGURATION

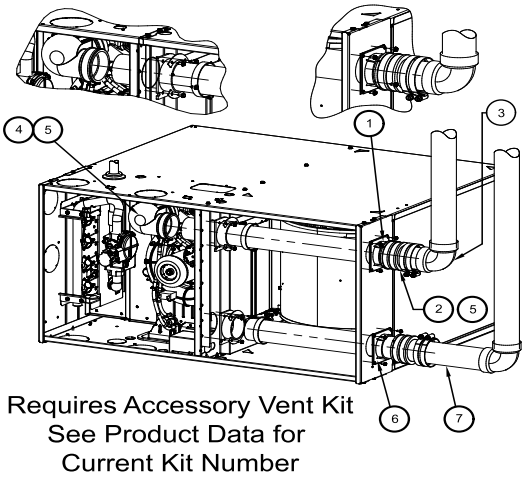

Representative drawing only, some models may vary.

HORIZONTAL LEFT-RIGHT VENT CONFIGURATION

Fig. 55 – Horizontal Left (Appearance may vary)
See "Notes for Venting Options"

Representative drawing only, some models may vary.

HORIZONTAL RIGHT-VERTICAL VENT CONFIGURATION

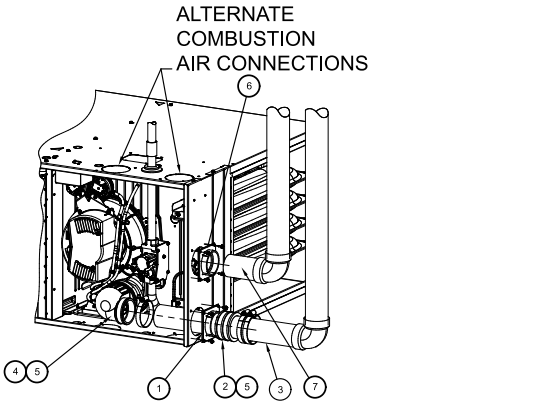

Representative drawing only, some models may vary.

HORIZONTAL RIGHT-RIGHT VENT CONFIGURATION

Fig. 56 – Horizontal Right (Appearance may vary)
See "Notes for Venting Options"

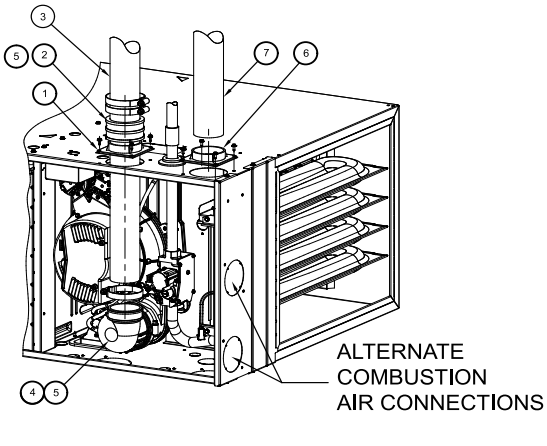

Notes for venting options

1. Attach vent pipe adapter with gasket to furnace casing.
2. Align notches in rubber coupling over standoffs on adapter. Slide clamps over the coupling.
3. Slide vent pipe through adapter and coupling into vent elbow.
4. Insert vent pipe into vent elbow.
5. Torque all clamps 15 lb.-in.
6. Attach combustion air pipe adapter with gasket to furnace.

Attach combustion air pipe to adapter with silicone. Pilot drill a 1/8-in. hole in adapter and secure with a #7 x 1/2-in. sheet metal screw.

Table 18 – Maximum Allowable Exposed Vent Length in Unconditioned Space - Ft.

Unit Size		40,000 BTUH									60,000 BTUH											
Winter Design Temp °F	Pipe Dia. in.	Uninsulated			3/8-in. Insulation			1/2-in. Insulation			Uninsulated				3/8-in. Insulation				1/2-in. Insulation			
		1 ½	2	2 ½	1 ½	2	2 ½	1 ½	2	2 ½	1 ½	2	2 ½	3	1 ½	2	2 ½	3	1 ½	2	2 ½	3
	20	20	20	20	20	50	45	20	60	50	20	30	30	25	20	75	65	60	20	85	75	65
	0	10	5	5	20	25	20	20	30	25	15	15	10	10	20	40	30	25	20	45	40	30
	-20	5			20	15	10	20	20	15	10	5			20	25	20	15	20	30	25	20
	-40				15	10	5	15	15	10	5				20	15	15	10	20	20	15	10

Unit Size		80,000 BTUH														
Winter Design Temp °F	Pipe Dia. in.	Uninsulated					3/8-in. Insulation					1/2-in. Insulation				
		1 ½	2	2 ½	3	4	1 ½	2	2 ½	3	4	1 ½	2	2 ½	3	4
	20	15	40	40	35	30	15	50	90	75	65	15	50	70	70	70
	0	15	20	15	10	5	15	50	45	35	30	15	50	50	40	35
	-20	15	10	5			15	35	30	20	15	15	40	30	25	15
	-40	10	5				15	25	20	15	5	15	30	25	20	10

Unit Size		100,000 BTUH											
Winter Design Temp °F	Pipe Dia. in.	Uninsulated				3/8-in. Insulation				1/2-in. Insulation			
		2	2 ½	3	4	2	2 ½	3	4	2	2 ½	3	4
	20	20	50	40	35	20	80	95	80	20	80	105	90
	0	20	20	15	10	20	55	45	35	20	65	55	45
	-20	15	10	5		20	35	30	20	20	45	35	25
	-40	10	5			20	25	20	10	20	30	25	15

NOTE: Maximum Equivalent Vent Length (MEVL) includes standard and concentric vent termination and does NOT include elbows. Use Table 17 - Deductions from Maximum Equivalent Vent Length to determine allowable vent length for each application.

Installing the Vent Pipe Adapter and Combustion Air Pipe Adapter

WARNING

CARBON MONOXIDE POISONING HAZARD

Failure to follow this warning could result in personal injury or death.

To route the vent pipe and combustion air pipe through the furnace, the manufacturer supplied kit must be used. Failure to properly seal the blower compartment from the furnace vestibule could result in the circulation of carbon monoxide throughout the structure. The vent pipe and combustion air pipe must be a continuous pipe while passing through the blower compartment. Seals supplied in this kit must be installed per the instructions provided. Follow all procedures outlined in these instructions.

WARNING

CARBON MONOXIDE POISONING HAZARD

Failure to follow this warning could result in personal injury or death.

DO NOT use cement to join polypropylene venting systems. Follow the polypropylene venting system manufacturer's instructions for installing polypropylene venting systems.

NOTE: The rubber coupling that attaches to the vent pipe adapter must be used. The adapter seals the vent pipe to the casing and reduces the strain on the vent elbow attached to the inducer.

1. Apply the gaskets to the vent pipe and combustion air pipe adapters. If supplied, remove and discard round center "slug" from interior of gasket (see Fig. 57).

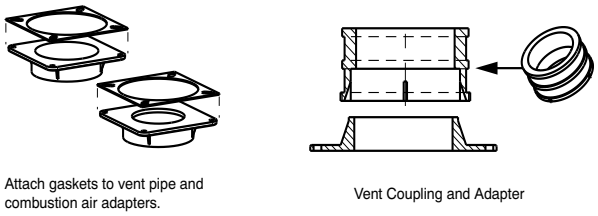

Fig. 57 – Vent Coupling and Adapter with Gaskets

NOTE: The vent pipe adapter can be distinguished from the inlet pipe adapter by the absence of an internal pipe-stopping ring. The vent pipe can pass through the vent pipe adapter; it cannot pass through the inlet pipe adapter.

2. Align the screw holes in the plastic vent pipe adapter with the dimples in the casing.
3. Pilot drill the screw holes for the adapter in the casing and attach the vent pipe adapter to the furnace with sheet metal screws
4. Slide the end of the rubber vent coupling with notches in it over the standoffs on the vent pipe adapter.
5. Insert a length of vent pipe through the coupling into the outlet of the vent elbow.
6. Tighten the clamp around the outlet of the vent elbow. Torque the clamp to 15 lb-in.

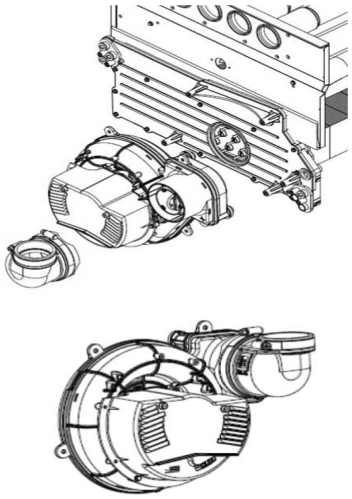

Fig. 58 – Inducer Vent Elbow

NOTICE

The following instructions are for PVC/ABS DWV vent piping only. DO NOT USE THESE TECHNIQUES FOR POLYPROPYLENE VENT PIPING SYSTEMS. See the polypropylene vent system manufacturer's instructions for installing polypropylene venting systems.

Install the remaining vent and combustion air pipes as shown below. It is recommended that all pipes be cut, prepared, and pre-assembled before permanently cementing any joint.

1. Working from furnace to outside, cut pipe to required length(s).
2. De-burr inside and outside of pipe.
3. Chamfer outside edge of pipe for better distribution of primer and cement.
4. Complete the vent and combustion air pipe installation by connecting the concentric vent or by installing the required termination elbows (see Fig. 43 and Fig. 44).
   For Ventilated Combustion Air Termination (see Fig. 49).
5. Clean and dry all surfaces to be joined.
6. Check dry fit of pipe and mark insertion depth on pipe.
7. Insert the vent pipe into the vent elbow.
8. Torque clamp on vent elbow 15 lb-in.
9. Torque clamp on vent coupling 15 lb-in.
10. Insert the combustion air pipe into the adapter.
11. Pilot drill a screw hole through the adapter into the combustion air pipe and secure the pipe to the adapter with sheet metal screws. **DO NOT DRILL INTO POLYPROPYLENE VENT PIPES.** Use an optional accessory vent coupling, if needed.
12. Seal around the combustion air pipe with silicone or foil tape. **SILICONE SEALERS MAY NOT BE APPROPRIATE FOR POLYPROPYLENE VENT SYSTEMS. SEE POLYPROPYLENE VENT SYSTEM MANUFACTURER'S INSTRUCTIONS.**
13. After pipes have been cut and pre-assembled, apply generous layer of cement primer to pipe fitting socket and end of pipe to insertion mark. Quickly apply approved cement to end of pipe and fitting socket (over primer). Apply cement in a light, uniform coat on inside of socket to prevent buildup of excess cement. Apply second coat. **DO NOT CEMENT POLYPROPYLENE FITTINGS.**
14. While cement is still wet, twist pipe into socket with 1/4-in. turn. Be sure pipe is fully inserted into fitting socket.

15. Wipe excess cement from joint. A continuous bead of cement will be visible around perimeter of a properly made joint.
16. Handle pipe joints carefully until cement sets.
17. Horizontal portions of the venting system shall be supported to prevent sagging. Space combustion air piping and vent piping hangers (Table 19). Support pipes using perforated metal hanging strap or commercially available hangers or straps designed to support plastic pipe.

Table 19 – Hanger Spacing

Diameter	Material				
	PVC Sch 40	SDR 21 & 26	ABS	CPVC	Polypropylene
1 1/2-in.	**3-ft.**	**2 1/2-ft.**	**3-ft.**	**3-ft.**	**3.25-ft.**
38-mm	914-mm	762-mm	914-mm	914-mm	1000 mm
2-in.	3-ft.	3-ft.	3-ft.	3-ft.	3.25-ft.
51-mm	914-mm	914-mm	914-mm	914-mm	1000 mm
2 1/2-in.	3 1/2-ft.	3-ft.	3 1/2-ft.	3 1/2-ft.	3.25-ft.
64-mm	1067-mm	914-mm	1067-mm	1067-mm	1000 mm
3-in.	3 1/2-ft.	3-ft.	3 1/2-ft.	3 1/2-ft.	3.25-ft.
76-mm	1067-mm	914-mm	1067-mm	1067-mm	1000 mm
4-in.	4-ft.	3 1/2-ft.	4-ft.	4-ft.	3.25-ft.

18. Slope the vent and combustion air piping downward towards furnace. A minimum slope of at least 1/4-in. (6 mm) per linear ft.(1-in (25 mm) per 4 ft.(1.2 M)) with no sags between hangers is required. See Caution Box below.

⚠ CAUTION

FURNACE RELIABILITY HAZARD

Failure to follow this caution may result in nuisance short cycling, frozen vent termination, and/or no heat.

Slope the vent and combustion air piping downward towards furnace a minimum of 1/4-in. (6 mm) per linear ft. of pipe.

19. Use appropriate methods to seal openings where combustion air pipe and vent pipe pass through roof or sidewall.

⚠ WARNING

CARBON MONOXIDE POISONING HAZARD

Failure to follow this warning could result in personal injury or death.

DO NOT use cement to join polypropylene venting systems. Follow the polypropylene venting system manufacturer's instructions for installing polypropylene venting systems.

⚠ NOTICE

FOR POLYPROPYLENE VENTING SYSTEMS

When using polypropylene venting systems, all venting materials used, including the vent terminations, must be from the same manufacturer.

Installing the Vent Termination

Roof Terminations

A roof termination of any type will require a 4-in. (102 mm) flashing for a 2 in. (50 mm ND) concentric vent or a 5-in. diameter (127 mm) flashing for a 3-in. (80 mm ND) concentric vent kit. For two-pipe or single pipe vent systems, a flashing for each pipe of the required diameter will be necessary.

It is recommended that the flashing be installed by a roofer or competent professional prior to installing the concentric vent. The terminations can be installed on a flat or pitched roof.

Concentric Vent

Single or multiple concentric vent must be installed (see Fig. 43). Maintain the required separation distance between vents or pairs of vents (see Fig. 43) and all clearance (see Fig. 46).

NOTE: Follow the instructions of the vent terminal manufacturer. These instructions are provided as a reference, only.

Cut one 4-in. (102 mm) diameter hole for 2-in. (50 mm ND) kit, or one 5-in. (127 mm) diameter hole for 3-in. (80 mm ND) kit in the desired location.

Loosely assemble concentric vent/combustion air termination components together using instructions in kit.

Slide assembled kit with rain shield **REMOVED** through hole in wall or roof flashing.

NOTE: Do not allow insulation or other materials to accumulate inside of pipe assembly when installing it through hole.

Disassemble loose pipe fittings. Clean and cement using same procedures as used for system piping. **DO NOT CEMENT POLYPROPYLENE FITTINGS.**

Two-Pipe and Single-Pipe Terminations

Single and two pipe vent must be installed (see Fig. 43 and Fig. 44). Maintain the required separation distance between vents or pairs of vents (see Fig. 43 and Fig. 44) and all clearances (see Fig. 46 and Fig. 47).

⚠ NOTICE

RECOMMENDED SUPPORT FOR VENT TERMINATIONS

It is recommended that rooftop vent terminations in excess of 36 inches (1 M) in vertical length be supported by **EITHER** the Direct Vent Termination Kit (Table 14) or by field-supplied brackets or supports fastened to the structure.

Cut the required number of holes in the roof or sidewall for vent and (when used) combustion air pipes. Sidewall holes for two-pipe vent terminations should be side-by-side, allowing space between the pipes for the elbows to fit on the pipes.

Holes in the roof for direct-vent two-pipe terminations should be spaced no more than 18 in. (457 mm) apart to help avoid vent gas recirculation into combustion air intake.

Termination elbows will be installed after the vent and (if used) combustion air pipe is installed.

Sidewall Terminations

Concentric Vent

NOTE: Follow the instructions of the vent terminal manufacturer. These instructions are provided as a reference only.

Determine an appropriate location for termination kit using the guidelines provided in section "Locating The Vent Termination" in this instruction.

1. Cut one 4-in. diameter hole for 2-in. kit, or one 5-in. diameter hole for 3-in. kit.
2. Loosely assemble concentric vent/combustion air termination components together using instructions in kit.
3. Slide assembled kit with rain shield REMOVED through hole.

NOTE: Do not allow insulation or other materials to accumulate inside of pipe assembly when installing it through hole.

4. Locate assembly through sidewall with rain shield positioned no more than 1-in. (25 mm) from wall (see Fig. 43).
5. Disassemble loose pipe fittings. Clean and cement using same procedures as used for system piping. **DO NOT CEMENT POLYPROPYLENE FITTINGS.**

2-Pipe and 1-Pipe Vent Termination

NOTE: Follow the instructions of the vent terminal manufacturer. These instructions are provided as a reference, only.

⚠ NOTICE

RECOMMENDED SUPPORT FOR VENT TERMINATIONS

It is recommended that sidewall vent terminations in excess of 24 inches (0.6 M) in vertical length be supported by **EITHER** the Direct Vent Termination Kit (Table 14) or by field-supplied brackets or supports fastened to the structure.

Determine an appropriate location for termination kit using the guidelines provided in section "Locating The Vent Termination" in this instruction.

1. Cut two holes, one for each pipe, of appropriate size for pipe size being used.
2. Loosely install elbow in bracket (if used) and place assembly on combustion-air pipe.
3. Install bracket (see Fig. 43).

NOTE: For applications using vent pipe option indicated by dashed lines (see Fig. 43 and Fig. 44), rotate vent elbow 90° from position.

4. Disassemble loose pipe fittings. Clean and cement using same procedures as used for system piping. **DO NOT CEMENT POLYPROPYLENE FITTINGS.**

(Direct Vent / 2-Pipe System ONLY)

When two or more furnaces are vented near each other, two vent terminations may be installed (see Fig. 43), but next vent termination, or pair of vent terminations, must be at least 36 in. (914 mm) away from the first two terminations. It is important that vent terminations be made (see Fig. 43) to avoid recirculation of vent gases.

Venting System Length Calculations

The Total Equivalent Vent Length (TEVL) for **EACH** combustion air or vent pipe equals the length of the venting system, plus the equivalent length of elbows used in the venting system (Table 17).

Standard vent terminations or factory accessory concentric vent terminations count for zero deduction.

See vent system manufacturer's data for equivalent lengths of flexible vent pipe or other termination systems. **DO NOT ASSUME** that one foot of flexible vent pipe equals one foot of straight PVC/ABS DWV vent pipe.

Compare the Total Equivalent Vent Length to the Maximum Equivalent Vent Lengths (Table 16).

Example 1

A direct-vent 60,000 BTUH furnace installed at 2100 ft. (640M). Venting system includes **FOR EACH PIPE:**
70 feet (22 M) of vent pipe, 65 feet (20 M) of combustion air inlet pipe, (3) 90º long-radius elbows, (2) 45º long-radius elbows, and a factory accessory concentric vent kit.

Can this application use 2" (50 mm ND) PVC/ABS DWV vent piping?

Measure the required linear length of air inlet and vent pipe; insert the longest of the two here					70 ft. (22 M)	Use length of the longer of the vent or air inlet piping system
Add equiv length of (3) 90º long-radius elbows (use the highest number of elbows for either the vent or inlet pipe)	3	x	3 ft. (0.9 M)	=	9 ft. (2.7 M)	From Table 17
Add equiv length of (2) 45º long-radius elbows (use the highest number of elbows for either the vent or inlet pipe)	2	x	1.5 ft. (0.5 M)	=	3 ft. (0.9 M)	From Table 17
Add equiv length of factory concentric vent term					0 ft.	From Table 17
Add correction for flexible vent pipe, if any					0 ft.	From Vent Manufacturer's instructions; zero for PVC/ABS DWV
Total Equivalent Vent Length (TEVL)					82 ft. (25 M)	Add all of the above lines
Maximum Equivalent Vent Length (MEVL)					95 ft. (29 M)	For 2" pipe from Table 16
Is TEVL less than MEVL?					YES	Therefore, 2" pipe MAY be used

Example 2

A direct-vent 60,000 BTUH furnace installed at 2100 ft. (640M). Venting system includes **FOR EACH PIPE:**
100 feet (30 M) of vent pipe, 95 feet (29 M) of combustion air inlet pipe, (3) 90º long-radius elbows, and a polypropylene concentric vent kit. Also includes 20 feet (6.1 M) of flexible polypropylene vent pipe, included within the 100 feet (30 M) of vent pipe.

VERIFY FROM POLYPROPYLENE VENT MANUFACTURER'S INSTRUCTIONS for the multiplier correction for flexible vent pipe.

Can this application use 60mm o.d. (2") polypropylene vent piping? If not, what size piping can be used?

Measure the required linear length of **RIGID** air inlet and vent pipe; insert the longest of the two here: 100 ft. Of rigid pipe - 20 ft. Of flexible pipe				=	80 ft. (24 M)	Use length of the longer of the vent or air inlet piping system
Add equiv length of (3) 90º long-radius elbows (use the highest number of elbows for either the vent or inlet pipe)	3	x	5 ft. (1.5 M)	=	15 ft. (4.6 M)	Example from polypropylene vent manufacturer's instructions, Verify from vent manufacturer's instructions.
Add equiv length of 45º long-radius elbows (use the highest number of elbows for either the vent or inlet pipe)	0	x		=	0 ft. (0 M)	
Add equiv length of factory concentric vent term	9	x	3.3 ft (0.9 M)	=	30 ft. (9 M)	
Add correction for flexible vent pipe, if any	2*	x	20 ft. (6.1 M)	=	40 ft. (12.2 M)	
* VERIFY FROM VENT MANUFACTURER'S INSTRUCTIONS; For example only, assume 1 meter of flexible 60mm (2") or 80mm (3") polypropylene pipe equals 2.0 meters (6.5 ft.) of PVC/ABS pipe.						
Total Equivalent Vent Length (TEVL)					165 ft. (50 M)	Add all of the above lines
Maximum Equivalent Vent Length (MEVL)					95 ft. (29 M)	For 2" pipe from Table 16
Is TEVL less than MEVL?					NO	Therefore, 60mm (2") pipe may NOT be used; try 80mm (3")
Maximum Equivalent Vent Length (MEVL)					185 ft. (57 M)	For 3" pipe from Table 16
Is TEVL less than MEVL?					YES	Therefore, 80mm (3") pipe MAY be used

AIR DELIVERY - CFM

Table 20 – Air Delivery - CFM (with filter)

Unit Size	Airflow Setting	Default Setting	External Static Pressure (in.w.c.)									
			0.1	0.2	0.3	0.4	0.5	0.6	0.7	0.8	0.9	1
36040B	1	Const. Fan	505	435	360	300	235	170	-	-	-	-
	2		560	495	420	360	305	250	185	120	-	-
	3		610	550	480	415	365	310	255	200	135	-
	4		640	580	515	450	400	350	300	245	190	135
	5		695	640	590	525	465	420	375	325	275	225
	6		750	700	650	590	535	485	440	400	355	305
	7	Heating	800	750	705	655	595	545	500	460	420	375
	8		850	805	760	715	660	605	560	515	475	440
	9		895	850	805	765	715	660	615	570	530	495
	10		940	895	855	810	770	720	670	625	585	550
	11		995	950	910	870	830	785	735	690	650	610
	12		1055	1015	975	935	900	860	820	770	725	685
	13		1110	1070	1035	995	960	925	890	845	800	755
	14		1160	1125	1085	1050	1020	985	950	915	870	825
	15		1220	1180	1145	1115	1080	1045	1015	980	945	900
	16		1275	1240	1205	1175	1140	1105	1075	1045	1015	975
	17		1330	1295	1260	1230	1200	1165	1135	1105	1075	1045
	18	Cooling	1385	1355	1320	1290	1255	1225	1200	1170	1130	1085
48060B	1	Const. Fan	595	525	455	385	315	255	190	120	-	-
	2		680	615	550	490	425	360	300	245	180	-
	3		725	670	610	545	485	425	365	310	260	200
	4		795	740	685	630	575	515	460	405	355	305
	5		860	805	755	700	650	595	545	490	440	390
	6		940	890	840	795	745	695	645	595	545	495
	7		1010	965	920	875	830	785	740	690	645	600
	8		1080	1035	990	950	905	865	825	780	735	690
	9		1160	1120	1075	1035	995	955	920	880	840	795
	10	Heating	1205	1165	1125	1090	1050	1010	970	935	895	855
	11		1235	1195	1160	1120	1085	1045	1010	970	935	895
	12		1310	1270	1235	1195	1160	1125	1090	1055	1020	985
	13		1390	1355	1320	1285	1250	1215	1185	1150	1115	1085
	14		1465	1430	1400	1365	1335	1305	1270	1240	1210	1180
	15		1540	1505	1475	1445	1415	1385	1355	1330	1300	1270
	16		1615	1580	1550	1525	1495	1465	1440	1410	1385	1360
	17		1685	1655	1625	1600	1575	1550	1525	1495	1475	1450
	18	Cooling	1820	1785	1745	1710	1675	1640	1600	1565	1525	1485
60080C	1	Const. Fan	655	565	480	395	305	220	150	-	-	-
	2		760	675	600	525	450	370	290	220	155	-
	3		820	745	670	600	525	460	385	310	245	180
	4		910	840	770	705	640	575	510	440	370	305
	5		995	930	865	800	735	675	615	555	485	420
	6		1070	1010	950	885	825	770	705	650	595	530
	7		1160	1105	1050	990	935	875	825	770	715	665
	8		1250	1195	1145	1090	1035	980	930	880	825	775
	9		1355	1300	1255	1205	1155	1105	1050	1000	950	905
	10		1430	1380	1335	1285	1240	1195	1140	1095	1045	1000
	11		1525	1475	1430	1385	1340	1295	1250	1200	1155	1110
	12	Heating	1680	1635	1595	1550	1510	1470	1425	1385	1340	1295
	13		1725	1680	1635	1600	1560	1520	1480	1440	1395	1350
	14		1815	1775	1735	1695	1655	1620	1580	1540	1500	1460
	15		1900	1865	1825	1785	1750	1710	1675	1635	1600	1565
	16		1995	1955	1920	1885	1850	1815	1780	1745	1710	1670
	17		2100	2065	2030	1995	1960	1925	1890	1855	1825	1790
	18	Cooling	2265	2230	2180	2130	2080	2030	1975	1925	1875	1825

Table 20 – Air Delivery - CFM (with filter) (Continued)

Unit Size	Airflow Setting	Default Setting	External Static Pressure (in.w.c.)									
			0.1	0.2	0.3	0.4	0.5	0.6	0.7	0.8	0.9	1
60100C	1	Const. Fan	655	560	465	375	290	205	125	-	-	-
	2		725	640	550	465	390	310	230	155	-	-
	3		805	725	640	560	480	410	340	265	195	135
	4		885	810	735	660	585	510	445	380	310	245
	5		965	900	825	755	685	620	550	490	425	360
	6		1055	990	925	860	790	730	660	600	535	480
	7		1145	1080	1020	960	895	835	775	715	650	595
	8		1235	1175	1120	1060	1000	945	885	830	770	710
	9		1325	1270	1215	1160	1105	1050	995	940	890	835
	10		1415	1360	1310	1260	1210	1155	1100	1050	1000	950
	11		1505	1455	1405	1360	1310	1265	1215	1165	1115	1065
	12		1600	1550	1505	1460	1415	1370	1325	1275	1225	1180
	13		1690	1645	1600	1560	1515	1470	1425	1380	1335	1285
	14		1780	1735	1695	1650	1610	1570	1530	1485	1445	1400
	15	Heating	1865	1825	1785	1740	1700	1660	1620	1585	1540	1500
	16		1970	1925	1885	1845	1805	1770	1730	1690	1655	1615
	17		2055	2015	1980	1940	1900	1865	1825	1790	1755	1715
	18	Cooling	2135	2100	2060	2025	1985	1950	1915	1880	1845	1810

NOTE:

1. A filter is required for each return-air inlet. Airflow performance included 3/4-in. (19 mm) washable filter media such as contained in a factory - authorized accessory filter rack. See accessory list. To determine airflow performance without this filter, assume an additional 0.1 in. w.c. available external static pressure.
2. **Adjust the blower airflow setting as necessary for the proper air temperature rise for each installation.**
3. Airflows over 1800 CFM require bottom return, two-side return, or bottom and side return. A minimum filter size of 20" x 25" (508 x 635 mm) is required.
4. For upflow applications, air entering from one side into both the side of the furnace and a return air base counts as a side and bottom return
5. .The -- entry indicates unstable operating conditions

Table 21 – Airflow Settings

	Default Airflow Settings*		Designated Airflow Settings	
Unit Size	Heating	Cooling	Heating	Const. Fan
36040B	7	18	(4-11)	(1-7)
48060B	10	18	(6-13)	(1-7)
60080C	12	18	(8-12)	(1-1)
60100C	15	18	(10-15)	(1-2)

*. Setting #1 is the default setting for Constant Fan

FURNACE CONTROL PROGRAMMING AND NAVIGATION

On-Board Control Method

⚠ CAUTION

ELECTRICAL SHOCK HAZARD

Failure to follow this warning could result in personal injury, or death.

Blower access door switch removes 115-V power to control. No component operation can occur unless switch is closed. Caution must be taken when manually closing this switch for service purposes.

Do not tape or permanently allow the door switch to be bypassed. Temporarily depress the door switch with one hand while accessing the service buttons with your other hand. Do not touch uninsulated electrical components.

This furnace model is equipped with an on-board 3-digit LCD display with pushbutton navigation for the adjustment of operating parameters, diagnostics, and service. The control board must be powered to use the display and pushbuttons. Upon startup, the control will alternate displaying the Model Program Number (PrG) and Software Version (uEr). The control board has been programmed at the factory with a Model Program Number specific to the furnace product number. The correct Model Program Number is shown on the furnace rating plate.

The system's status is displayed after startup or after no control buttons have been pressed for 60 seconds. Status Code LED will also be illuminated or blinking when displaying the system status. The codes which indicate the current operating mode of the system as shown in Table 22.

Table 22 – System Status Display Codes

Display	Operating Mode	Notes:
idL	Idle/Standby Mode	No active demands
HE	Heating Mode	Gas Heating active
CL1	Low Cooling Mode	Low Cooling or Heat Pump active
CL2	High Cooling Mode	High Cooling or Heat Pump active
HPd	Heat Pump Defrost Mode	Gas Heating cycle active during Heat Pump Defrost cycle
CFn	Continuous Fan Mode	Continuous Fan active
bLr	Secondary Unit Operating Blower	Only used when control is the secondary furnace of a twinned furnace system and primary furnace is active
##.#	Active Status Code	See Fig. 60 or Furnace Service Label for codes

Table 23 – Main Menu Options

Display	Operating Mode	Use
FLt	Last 7 faults that occurred	Faults code menu stores the 7 latest faults in memory. If no faults, None (non) will be displayed. To clear fault history, scroll to Clear (CLr) and press MENU/SELECT. See Fig. 60 or Furnace Service Label for codes.
Ht	Heating blower speed	Heating Airflow Setting. Adjust higher to lower Temp. Rise; lower to increase Temp. Rise. See Start-Up Procedures. See Fig. 59 for allowable selections and Table 20 for airflows.
CL1	Low Cooling Mode	Low Cooling and Low Heat Pump speed
CL2	High Cooling Mode	High Cooling and High Heat Pump speed
CFn	Constant Fan blower speed	Constant Fan Airflow Setting. See Fig. 59 for allowable selections and Table 20 for airflows.
Hod	Heat OFF Delay	Value shown in seconds. Shorter delays may leave unused heat in ducts. Longer delays may blow cold air at the end of heating demands.
Cod	Cool OFF Delay	Value shown in seconds. Shorter delays may leave unused energy in furnace coil. Longer delays may re-evaporate condensate.
dir	Direction	Adjusts display orientation 180 degrees between up flow (UPF) and down flow (dnF).
tnn	Twinning	Primary (Pr1) or Secondary (SEC) furnace selection. Adjust only if furnace is used in a twinned furnace system. Use of accessory kit required. See kit instructions.
inF	Program # and Software	Do NOT program the control board with a Model Program Number different than what is specified on the rating plate. Alternates displaying the saved Model Program Number (PrG) and Software Version (uEr).
Ct	Component Test	Use to validate components are functioning as intended. See Component Self-Test instructions in the Start-Up Procedures section.
rSt	Reset	Reset settings to Factory Default by selecting Yes (YES).

The Main Menu provides access to operating parameters of the furnace control including airflows as well as other diagnostics. See Fig. 42 for the location of the pushbuttons. Scroll through Main Menu by pressing MENU/SELECT button. Press NEXT/OPTION to display the current setting of the parameter (value will flash). Additional presses will scroll through setting options. Press MENU/SELECT button to save a new setting and return to the Main Menu. The display will flash three times to confirm a new setting selection has been saved. Fig. 59 shows the flow of the menu and settings. Table 23 provides additional information on parameter adjustment and applicability.

NFC and Supported App Method

This furnace control board is also equipped with NFC (Near Field Communication) technology which allows the adjustment of operating parameters, diagnostics, and service via a field-supplied mobile device with NFC capability and supported mobile app. Remove 115-V power from the furnace control board to use this method. See Fig. 42 for the location of the NFC antenna. Additional instructions and help may be available through the supported mobile app.

Scan the mobile app QR Code on page 1 of this manual for more information and a link to download the mobile app.

Control Board Replacement

If the control board must be replaced, the new board must be programmed with the correct Model Program Number before the furnace will operate. Do NOT program the control board with a Model Program Number different than what is specified on the rating plate. The control may be programmed by either of these approved methods:

1. Use the supported mobile app to flash the model program onto the board using Near Field Communication (NFC). Scan the QR code on page 1 of this manual for more information and a link to download the mobile app.
2. Use the correct Super Plug (available from distributor / replacement component) for the control board to copy the correct model program onto the new board.

Further details and instructions for these programming methods are provided with the replacement control board.

⚠ CAUTION

FURNACE OVERHEATING HAZARD

Failure to follow this caution could result in reduced furnace life.

Do NOT program the control board with a Model Program Number different than what is specified on the rating plate. Parameter options will not match design values.

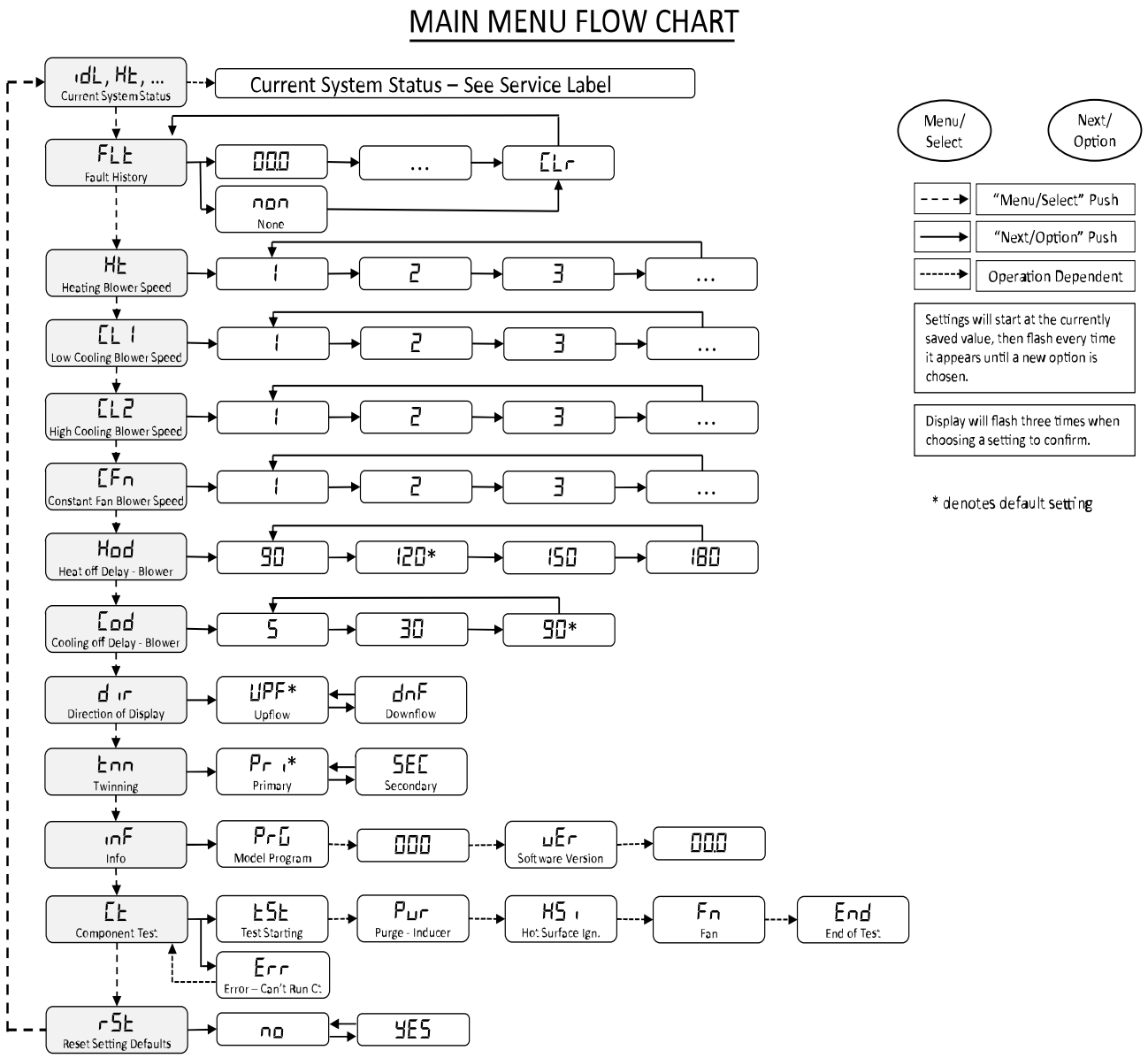

Fig. 59 – 3 Digit Display Flow Chart

SERVICE LABEL

STATUS CODE TABLE

Scan QR code or reference troubleshooting guide in installation manual.

The major status code is displayed in the first 2 digits of the display. The minor status code is displayed in the third digit . The major status code is also displayed on the LED indicator through the door with the first digit being the number of short flashes and the second digit being the number of long flashes.

Major	Minor	Description
10	1	L1 polarity fault
Rapid flash LED		
12	1	W on or BTS open at power up or within 5 minutes
13	1	Limit Lockout – switch opened in the limit circuit
14	1	Ignition Lockout after 4 consecutive ignition tries
	2	Flame lost 3 times after 70s of heating
	3	7 loss of flame events during a heat request or three 34.4 faults during heat request
	4	Lockout – 7 loss of pressure events during a heat request
21	1	24VAC sensed on gas valve when shouldn't be
22	1	False flame
23	3	Pressure detected over 0.15" (~0.65Vdc signal to gnd. 0" = ~0.500Vdc)
24	1	Fuse fault
25	1	No program info in micro, no heating operation.
	2	Corrupted program file, reprogram control using service app or super plug (supplied separately), no heating operation.
25	3	Twinned units are not identical. Program #'s do not match. Ensure furnaces are identical (same program #) when twinning. Main unit will not operate heating.
	4	Main program invalid. Using backup program to operate. Reprogram control to correct issue. Control still operates normally.
	5	Installer settings corrupted.Try reselecting installer settings, or reprogram control. Control will operate using default installer settings.
	6	Wrong program for control used - reprogram control so program matches control used. No heating operation.
		If program in furnace control is missing, not recognized, or corrupted. Reprogram control with correct program # as listed on the rating plate. Replace control if issue remains.
26	1	Lockout - BTS open - power reset only
27	1	Program in super plug is missing, not recognized, or corrupted.Remove super plug then retry. If code 27 remains, try a different super plug. If still fails, replace control.
	2	
	3	
31	4	Loss of pressure before blower comes on
31	5	Loss of pressure after blower comes on
34	1	Ignition fault- during four consecutive ignition trials
	2	After successful ignition (flame proven) flame loss before heating blower on delay.
	3	After successful ignition (flame proven) flame loss after heating blower on delay.
	4	Flame lost while operating at reduced inducer pressure from previous 34.3 fault condition
42	1	No RPM feedback at start-up or before ignition proved
	2	No RPM feedback after ignition is proved
	3	Exceeding Inducer RPM limit (model specific)
45	1	Control failure – flame circuit fault, memory mismatch or sequence error.
	2	Control failure – gas valve relay will not close
	3	Control failure – EEPROM memory issue.
		For code 45, cycle power, if code 45 repeats, replace control.
46	1	Momentary loss of power

MENU NAVIGATION

Scroll through main menu by pressing the MENU/SELECT button. Press NEXT/OPTION button to view current setting (will flash on display) and to scroll through setting options. Press MENU/SELECT button to save new setting and return to main menu. The display will flash to confirm setting selection before returning to the main menu.

SYSTEM STATUS		MAIN MENU	
DISPLAY	DESCRIPTION	DISPLAY	DESCRIPTION
idL	Idle / Standby Mode	idL,Ht,...	Current System Status
Ht	Heating Mode	FLt	Last 7 faults that occured
CL1	Low Cooling Mode	Ht	Heating Blower speed
CL2	High Cooling Mode	CL1	Low Cooling and Low Heat Pump speed
HPd	Heat Pump Defrost Mode	CL2	High Cooling and High Heat Pump speed
CFn	Continuous Fan Mode	CFn	Continuous Fan speed
bLr	Secondary Unit Operating Blower during CFn, CL, or Ht	Hod	Heat OFF delay
		Cod	Cool OFF delay
		dir	Orientation upflow or downflow
		tnn	Twinning Main or Secondary
		inF	Program # and Software version
##.#	Active Status Code	Ct	Component test
		rSt	Reset All Installer Settings to Factory Defaults

COMPONENT TEST

To initiate the component test sequence, the control must be in (idL) mode. No thermostat demands (W, Y, G). Select component test (Ct) from menu select buttons to start the component test sequence. Once initiated the furnace control will perform the following sequence:

1. PUr - Inducer ON (remains ON for test).
2. HS1- After waiting 10s, HSI ON for 15 seconds.
3. Fn- After HSI, then Blower ON for 10 seconds.
4. End- After Blower, Inducer ON for 10 more seconds. The test ends.

All copyrighted materials used herein are the property of their respective owners.

A210781

Fig. 60 – Service Label Information

START-UP, ADJUSTMENT, AND SAFETY CHECK

General

WARNING

FIRE HAZARD

Failure to follow this warning could result in personal injury, death and/or property damage.

This furnace is equipped with limit switches in the gas control area. The switches open and shut off power to the gas valve if a rollout or overheating condition occurs in the gas control area. DO NOT bypass the switches. Correct inadequate combustion air supply problem before recycling.

CAUTION

CUT HAZARD

Failure to follow this caution may result in personal injury.

Sheet metal parts may have sharp edges or burrs. Use care and wear appropriate protective clothing, safety glasses and gloves when handling parts and servicing furnaces.

1. Maintain 115-V wiring and ground. Improper polarity will result in rapid flashing control diagnostic light and Status code (10 .1) is displayed. The furnac will NOT operate.
2. Make thermostat wire connections at the 24-V terminal block on the furnace control. Failure to make proper connections will result in improper operation. (see Fig. 42)
3. Gas supply pressure to the furnace must be greater than 4.5 in. w.c. (0.16 psig) but not exceed 14 in. w.c. (0.5 psig).
4. Check all switches for continuity.
5. Install blower compartment door. Door must be in place to operate furnace.

Start-Up Procedures

WARNING

FIRE AND EXPLOSION HAZARD

Failure to follow this warning could cause personal injury, death and/or property damage.

Never test for gas leaks with an open flame. Use a commercially available soap solution made specifically for the detection of leaks to check all connections. A fire or explosion may result causing property damage, personal injury or loss of life.

1. Purge gas lines after all connections have been made.
2. Check gas lines for leaks.
3. To Begin Component Self-Test
   a. Remove thermostat wire connected to R terminal on control to ensure no thermostat demands are present.
   b. Temporarily depress blower door switch to power the control board to complete component self-test.

CAUTION

SHOCK HAZARD

Failure to follow this caution could result in personal injury.

Do not tape or permanently allow the door switch to be bypassed. Temporarily depress the door switch with one hand while accessing the service buttons with your other hand. Do not touch uninsulated electrical components.

c. To initiate the component test sequence, the control must be in (idL) mode no thermostat demands (W, Y1, Y/Y2, G). Select component test (Ct) from menu select buttons to start the component test sequence as shown in Table 24. Once initiated the furnace control will perform the Reconnect thermostat wire connected to R terminal on control board and re-install blower door.

4. Operate furnace per instruction on door.
5. Verify furnace shut down by lowering thermostat setting below room temperature.
6. Verify furnace restarts by raising thermostat setting above room temperature.

Table 24 – Test Sequence

Display	Operating Mode	Function
tSt	Test	Confirms start of Component Test mode.
Pur	Purge	Inducer ON for 10 seconds before next stage. Inducer remains ON for test duration. Inducer will operate at 25% torque
HS1	Hot Surface Igniter	Hot Surface Igniter ON for 15 seconds, then OFF.
Fn	Fan	Blower ON at 50% torque for 10 seconds, then OFF.
End	End Test	All component OFF except for Inducer for 10 seconds. Display returns to idL. If a thermostat input is detected or fault condition activates during the test sequence, control will abort and display End for 6 seconds.
Err	Error	Displayed if component test is not able start. Check for thermostat inputs or faults, and system status is Idle (idL).

WIRING DIAGRAM

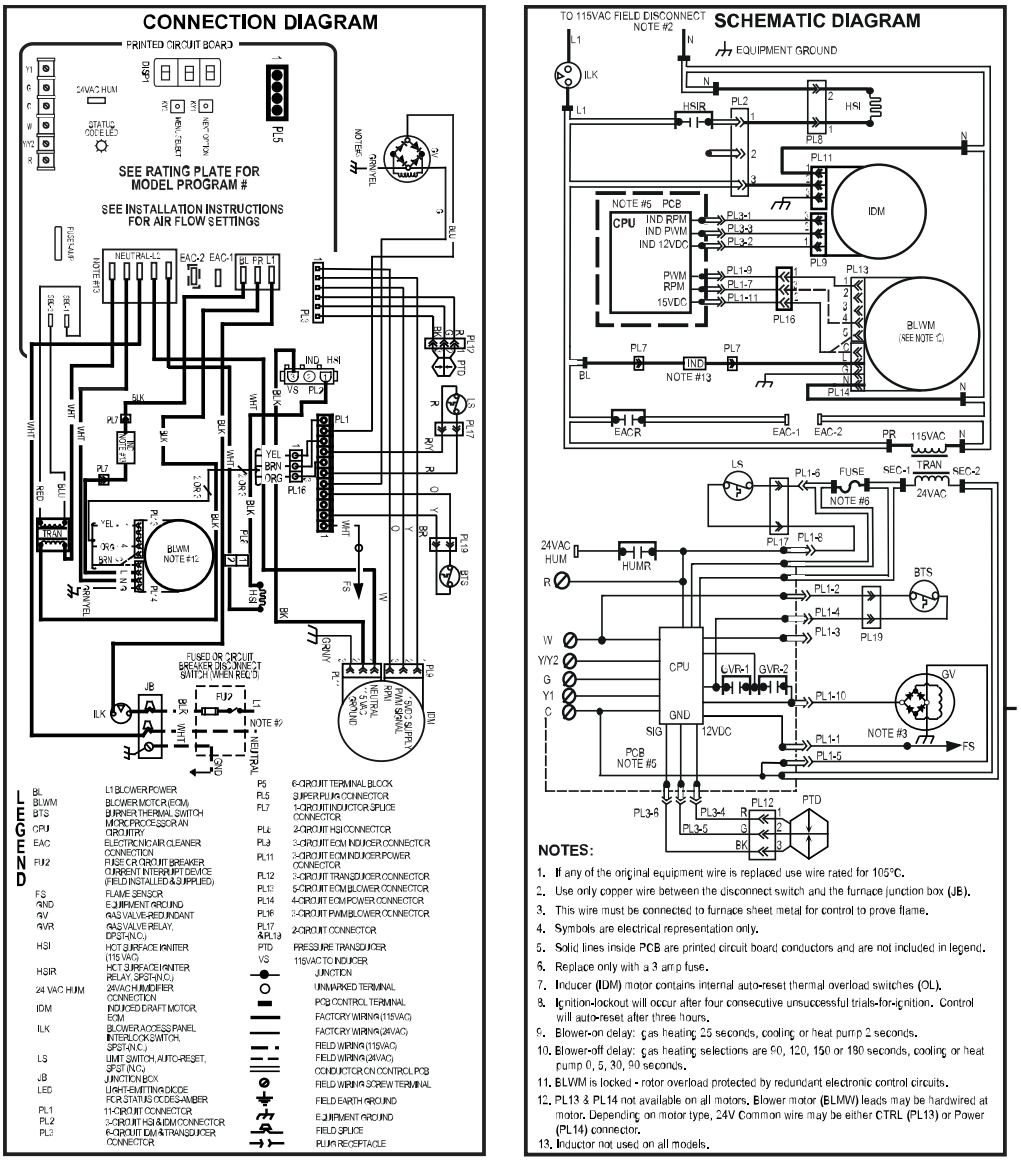

A210780

Fig. 61 – Wiring Diagram

Prime Condensate Trap with Water

CAUTION

UNIT OPERATION HAZARD

Failure to follow this caution may result in intermittent unit operation or performance satisfaction.

Condensate trap must be PRIMED or proper draining may not occur. The condensate trap has two internal chambers which can ONLY be primed by pouring water into the inducer drain side of condensate trap.

1. Remove upper and middle collector box drain plugs opposite of the condensate trap.
2. Connect field-supplied 5/8-in. (16 mm) ID tube with attached funnel to upper collector box drain connection.
3. Pour one quart (liter) of water into funnel/tube. Water should run through collector box, overfill condensate trap, and flow into open field drain.
4. Remove funnel; replace collector box drain plug.
5. Connect field-supplied 5/8-in. (16 mm) ID tube to middle collector box drain port.
6. Pour one quart (liter) of water into funnel/tube. Water should run through collector box, overfill condensate trap, and flow into open field drain.
7. Remove funnel and tube from collector box and replace collector box drain plug.

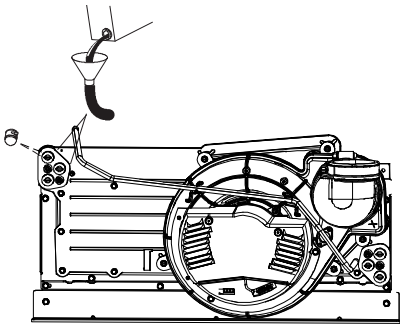

A190304

Fig. 62 – Prime Condensate Trap

Adjustments

WARNING

FIRE HAZARD

Failure to follow this warning could result in injury, death and/or property damage.

DO NOT bottom out gas valve regulator adjusting screw. This can result in unregulated gas valve outlet pressure and result in excess overfire and heat exchanger failures.

CAUTION

FURNACE DAMAGE HAZARD

Failure to follow this caution may result in reduced furnace life.

DO NOT redrill orifices. Improper drilling (burrs, out-of-round holes, etc.) can cause excessive burner noise and misdirection of inlet gas. (see Fig. 63)

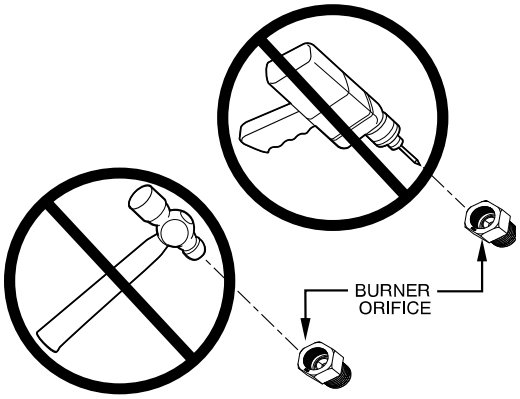

A180238

Fig. 63 – Orifice Hole

Furnace gas input rate on rating plate is for installation at altitudes up to 2,000 ft. (610 M). Furnace input rate must be within +/-2 percent of furnace rating plate input.

The input rating for altitudes above 2,000 ft. (610 M) must be reduced by 2 percent for each 1,000 ft. (305 M) above sea level. For installations below 2,000 ft. (610 M), refer to the unit rating plate. For installation above 2,000 ft. (610 M), multiply the input on the rating plate by the derate multiplier for the correct input rate (Table 25).

Table 25 – Altitude Derate Multiplier for USA

ALTITUDE (FT. / M)	PERCENT OF DERATE	DERATE MULTIPLIER FACTOR*
0–2000 (0-610)	0	1.00
2001–3000 (610-914)	4–6	0.95
3001–4000 (914-1219)	6–8	0.93
4001–5000 (1219-1524)	8–10	0.91
5001–5400 (1525-1646)	10–11	0.90

*Derate multiplier factors are based on midpoint altitude for altitude range.

Determine the correct gas input rate. Refer to the unit rating plate. Determine the correct outlet gas pressure adjustment.

1. Obtain average yearly gas heat value (at installed altitude) from local gas supplier.
2. Obtain average yearly gas specific gravity from local gas supplier.
3. Find closest natural gas heat value and specific gravity (Table 27 through Table 30).
4. Follow heat value and specific gravity lines to point of intersection to find outlet pressure setting for proper operation.

Check Inlet Gas Pressure

The inlet gas pressure must be checked with the furnace operating. This is necessary to make sure the inlet gas pressure does not fall below the minimum pressure of 4.5 in. w.c.

1. Make sure the gas supply is turned off to the furnace and at the electric switch on the gas valve
2. Loosen set screw on inlet tower pressure tap no more than one full turn with a 3/32 – in. hex wrench or remove the 1/8 – in. NPT plug from the inlet pressure tap on the gas valve.
3. Connect a manometer to the inlet pressure tap on gas valve.
4. Turn on furnace power supply.
5. Turn gas supply manual shutoff valve to ON position.
6. Turn furnace gas valve switch to ON position.
7. Jumper R and W thermostat connections at the furnace control board.
8. When main burners ignite, confirm inlet gas pressure is between 4.5 in. w.c. (1125 Pa) and 13.6 in. w.c. (3388 Pa).
9. Remove jumper across thermostat connections to terminate call for heat. Wait until the blower off delay is completed.

10. Turn furnace gas valve electric switch to OFF position.
11. Turn gas supply manual shutoff valve to OFF position.
12. Turn off furnace power supply.
13. Remove manometer from the inlet pressure tap of the gas valve.
14. Tighten set screw on inlet tower pressure tap with 3/32 – in. hex wrench, or if 1/8 – in. NPT plug was removed, apply pipe dope sparingly to end of plug and re-install in the gas valve

WARNING

FIRE HAZARD

Failure to follow this warning could result in personal injury, death, and/or property damage.

Inlet pressure tap set screw must be tightened and 1/8-in. NPT pipe plug must be installed to prevent gas leaks.

15. Adjust gas valve outlet pressure determined in Step 2 to obtain correct input rate.
    a. Turn gas valve ON/OFF switch to OFF.
    b. Loosen set screw on outlet tower pressure tap no more than one full turn with a 3/32 in. hex wrench. (see Fig. 64)
    c. Connect a water column manometer or similar device to pressure tap on the gas valve.
    d. Turn gas valve ON/OFF switch to ON.
    e. Manually close blower door switch.
    f. Set thermostat to call for heat.
    g. Remove regulator seal cap and turn regulator adjusting screw counterclockwise (out) to decrease input rate of clockwise (in) to increase input rate.
    h. Install regulator seal cap.
    i. Leave manometer or similar device connected and proceed to next step.

NOTE: If damaged or it is suspected to have been redrilled, check orifice hole with a numbered drill bit of correct size. Never redrill an orifice. A burr-free and properly sized orifice hole is essential for proper flame characteristics.

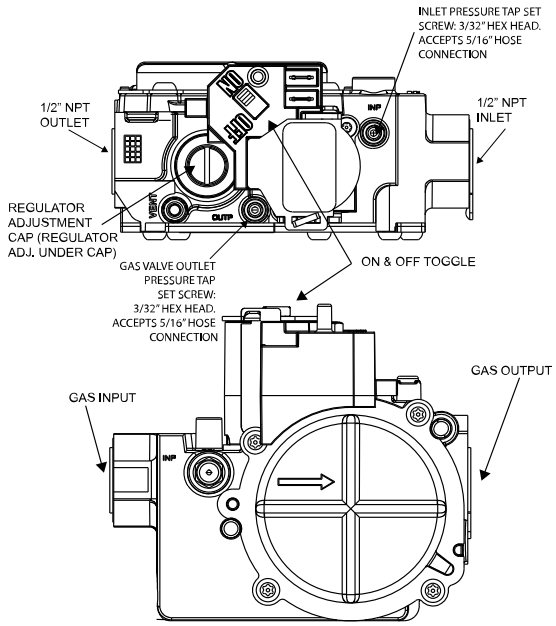

Fig. 64 – Gas Control Valve

16. Verify natural gas input rate by clocking meter.

NOTE: Gas valve regulator adjustment cap must be in place for proper input to be clocked.

    a. Turn off all other gas appliances and pilots served by the meter.
    b. Jumper R and W thermostat connections at the furnace control board.
    c. Run furnace for 15 minutes in heating operation.
    d. Measure time (in seconds) for gas meter to complete 1 revolution and note reading. The 2 or 5 cubic feet dial provides a more accurate measurement of gas flow.
    e. For cubic ft. of gas per hr (Table 26).
    f. Multiply gas rate (cu ft./hr) by heating value (BTUh/cu ft.) to obtain input.

If clocked rate does not match required input from Step 1, increase gas valve outlet pressure to increase input or decrease gas valve outlet pressure to decrease input. Repeat steps b through e until correct input is achieved. Reinstall regulator seal cap on gas valve.

17. Restore furnace to normal operating condition.
    a. When correct input rate and temperature rise is achieved, turn gas valve ON/OFF switch to OFF.
    b. Remove manometer or similar device from gas valve.
    c. Tighten set screw on outlet tower pressure tap with 3/32 in. hex wrench.
    d. Turn gas valve ON/OFF switch to ON.
    e. Check for gas leaks and verify furnace operation.

Adjust Temperature Rise

Set temperature rise. The furnace must operate within the temperature rise ranges specified on the furnace rating plate. Do not exceed temperature rise range specified on unit rating plate. Determine the temperature rise as follows:

NOTE: Blower door must be installed when taking temperature rise reading. Leaving blower door off will result in incorrect temperature measurements, due to possible changes in duct static pressure and airflow.

This furnace must operate within the temperature rise ranges specified on the furnace rating plate. Determine the air temperature as follows:

1. Place duct thermometers in return and supply ducts as close to furnace as possible. Be sure thermometers do not “see” heat exchangers so that radiant heat does not affect thermometer readings. This is particularly important with straight run ducts.
2. When thermometer readings stabilize, subtract return-air temperature from supply-air temperature to determine temperature rise.

If the temperature rise is outside this range, check the following:

    a. Gas input for heating operation.
    b. Derate for altitude if applicable.
    c. Return and supply ducts for excessive restrictions causing static pressures greater than 0.50-in. w.c.

WARNING

ELECTRICAL SHOCK HAZARD

Failure to follow this warning could result in personal injury or death.

Blower access door switch opens 115-V power to control. No component operation can occur unless switch is closed. Caution must be taken when manually closing this switch.

3. Adjust air temperature rise by adjusting blower speed. Increase blower speed to reduce temperature rise. Decrease blower speed to increase temperature rise
4. Turn thermostat down below room temperature and remove blower access door.
5. Refer to the **FURNACE CONTROL PROGRAMMING AND NAVIGATION** section of this manual for instructions on adjusting the blower speed.
6. Repeat steps a through e until temperature rise is within range on rating plate.

7. When correct input rate and temperature rise is achieved, turn gas valve ON/OFF switch to OFF.

⚠ WARNING

FIRE HAZARD

Failure to follow this warning could result in personal injury, death, and/or property damage.

Reinstall manifold pressure tap plug in gas valve to prevent gas leak.

8. Remove manometer or similar device from gas valve.
9. Reinstall manifold pressure tap plug in gas valve.

⚠ WARNING

FURNACE OVERHEATING HAZARD

Failure to follow this caution may result in reduced furnace life.

Recheck temperature rise. It must be within limits specified on the rating plate. Recommended operation is at the mid-point of rise range or slightly above.

Adjust Heating Blower-OFF Delay

1. The blower-OFF delay has four adjustable settings from 90 sec to 180 sec. Refer to the **FURNACE CONTROL PROGRAMMING AND NAVIGATION** section of this manual for instructions. Factory off delay setting is 120 sec.
2. Set airflow CFM for cooling. See Table 20-Air Delivery CFM (with filter).
3. Adjust cooling blower-OFF delay. Refer to the **FURNACE CONTROL PROGRAMMING AND NAVIGATION** section of this manual for instructions.

⚠ WARNING

FIRE HAZARD

Failure to follow this warning could result in personal injury, death, and/or property damage.

Gas valve outlet pressure tap must be tightened to prevent gas leak.

⚠ CAUTION

FURNACE OVERHEATING HAZARD

Failure to follow this caution may result in reduced furnace life.

Recheck temperature rise. It must be within limits specified on the rating plate. Recommended operation is at the mid-point of rise range or slightly above.

Check Safety Controls

1. Check Main Limit Switch(es)
   This control shuts off combustion control system and energizes air-circulating blower motor, if furnace overheats. By using this method to check limit control, it can be established that limit is functioning properly and will operate if there is a restricted duct system or motor failure. If limit control does not function during this test, cause must be determined and corrected.
   a. Run furnace for at least 5 minutes.
   b. Gradually block off return air with a piece of cardboard or sheet metal until the limit trips.
   c. Unblock return air to permit normal circulation for 5 minutes.
   d. Main limit circuit open causes 3 hour lock out.
   e. Reset unit power to clear limit fault lockout.

Checklist

- Put away tools and instruments. Clean up debris.
- Check Input/Output gas pressure
- Check heat rise per application static pressure
- Cooling CFM per application static pressure
- Verify that blower-OFF delay time is selected as desired.
- Verify that blower and burner access doors are properly installed.
- Cycle test furnace with room thermostat.
- Check operation of accessories per manufacturer's instructions.
- Review User's Guide with owner.
- Attach literature packet to furnace.

Table 26 – Gas Rate (CU ft./hr)

SEC FOR 1 REV	SIZE OF TEST DIAL			SEC FOR 1 REV	SIZE OF TEST DIAL		
	1 Cu Ft.	2 Cu Ft.	5 Cu Ft.		1 Cu Ft.	2 Cu Ft.	5 Cu Ft.
10	360	720	1800	55	65	131	327
11	327	655	1636	56	64	129	321
12	300	600	1500	57	63	126	316
13	277	555	1385	58	62	124	310
14	257	514	1286	59	61	122	305
15	240	480	1200	60	60	120	300
16	225	450	1125	62	58	116	290
17	212	424	1059	64	56	112	281
18	200	400	1000	66	54	109	273
19	189	379	947	68	53	106	265
20	180	360	900	70	51	103	257
21	171	343	857	72	50	100	250
22	164	327	818	74	48	97	243
23	157	313	783	76	47	95	237
24	150	300	750	78	46	92	231
25	144	288	720	80	45	90	225
26	138	277	692	82	44	88	220
27	133	267	667	84	43	86	214
28	129	257	643	86	42	84	209
29	124	248	621	88	41	82	205
30	120	240	600	90	40	80	200
31	116	232	581	92	39	78	196
32	113	225	563	94	38	76	192
33	109	218	545	96	38	75	188
34	106	212	529	98	37	74	184
35	103	206	514	100	36	72	180
36	100	200	500	102	35	71	178
37	97	195	486	104	35	69	173
38	95	189	474	106	34	68	170
39	92	185	462	108	33	67	167
40	90	180	450	110	33	65	164
41	88	176	439	112	32	64	161
42	86	172	429	116	31	62	155
43	84	167	419	120	30	60	150
44	82	164	409	124	29	58	145
45	80	160	400	129	28	56	140
46	78	157	391	133	27	54	135
47	76	153	383	138	26	52	130
48	75	150	375	144	25	50	125
49	73	147	367	150	24	48	120
50	72	144	360	157	23	46	115
51	71	141	355	164	22	44	110
52	69	138	346	171	21	42	105
53	68	136	340	180	20	40	100
54	67	133	333				

Table 27 – Gas Valve Outlet Pressure for Gas Heat Values at Altitude - 40,000

(Tabulated Data Based on 40,000 BTUH Input for 0-ft (0m) to 5400-ft (1646 M) above sea level)							
ALTITUDE RANGE ft (m)	AVG. GAS HEAT VALUE AT ALTITUDE (Btu/cu ft)	SPECIFIC GRAVITY OF NATURAL GAS					
		0.58	0.60	0.62	0.64	0.66	0.68
		Manifold Pressure					
0 (0) to 2000 (610)	900	2.8	2.9	3.0	3.1	3.1	3.1
	925	2.6	2.7	2.8	2.9	3.0	3.1
	950	2.5	2.6	2.7	2.7	2.8	2.9
	975	2.4	2.4	2.5	2.6	2.7	2.8
	1000	2.2	2.3	2.4	2.5	2.5	2.6
	1025	2.1	2.2	2.3	2.4	2.4	2.5
	1050	2.0	2.1	2.2	2.2	2.3	2.4
	1075	1.9	2.0	2.1	2.1	2.2	2.3
	1100	1.9	1.9	2.0	2.0	2.1	2.2
2001 (611) to 3000 (914)	800	3.0	3.1	3.1	3.1	3.1	3.1
	825	2.8	2.9	3.0	3.1	3.1	3.1
	850	2.6	2.7	2.8	2.9	3.0	3.1
	875	2.5	2.6	2.7	2.8	2.8	2.9
	900	2.4	2.4	2.5	2.6	2.7	2.8
	925	2.2	2.3	2.4	2.5	2.5	2.6
	950	2.1	2.2	2.3	2.3	2.4	2.5
	975	2.0	2.1	2.2	2.2	2.3	2.4
	1000	1.9	2.0	2.0	2.1	2.2	2.2
3001 (915) to 4000 (1219)	775	2.9	3.0	3.1	3.1	3.1	3.1
	800	2.8	2.9	3.0	3.0	3.1	3.1
	825	2.6	2.7	2.8	2.9	3.0	3.0
	850	2.4	2.5	2.6	2.7	2.8	2.9
	875	2.3	2.4	2.5	2.5	2.6	2.7
	900	2.2	2.3	2.3	2.4	2.5	2.6
	925	2.1	2.1	2.2	2.3	2.4	2.4
	950	2.0	2.0	2.1	2.2	2.2	2.3
	975	1.9	1.9	2.0	2.1	2.1	2.2
	1000	1.8	1.8	1.9	2.0	2.0	2.1
4001 (1220) to 5000 (1524)	750	2.9	3.0	3.1	3.1	3.1	3.1
	775	2.7	2.8	2.9	3.0	3.1	3.1
	800	2.5	2.6	2.7	2.8	2.9	3.0
	825	2.4	2.5	2.6	2.6	2.7	2.8
	850	2.3	2.3	2.4	2.5	2.6	2.6
	875	2.1	2.2	2.3	2.4	2.4	2.5
	900	2.0	2.1	2.2	2.2	2.3	2.4
	925	1.9	2.0	2.0	2.1	2.2	2.2
	950	1.8	1.9	1.9	2.0	2.1	2.1
	975	1.8	1.8	1.8	1.9	2.0	2.0
	1000	1.8	1.8	1.8	1.8	1.9	1.9
5001 (1525) to 5400 (1646)	725	2.9	3.0	3.1	3.1	3.1	3.1
	750	2.7	2.8	2.9	3.0	3.1	3.1
	775	2.5	2.6	2.7	2.8	2.9	3.0
	800	2.4	2.5	2.6	2.6	2.7	2.8
	825	2.2	2.3	2.4	2.5	2.6	2.6
	850	2.1	2.2	2.3	2.3	2.4	2.5
	875	2.0	2.1	2.1	2.2	2.3	2.3
	900	1.9	2.0	2.0	2.1	2.1	2.2
	925	1.8	1.8	1.9	2.0	2.0	2.1
	950	1.8	1.8	1.8	1.9	1.9	2.0
	975	1.8	1.8	1.8	1.8	1.8	1.9
	1000	1.8	1.8	1.8	1.8	1.8	1.8

Table 28 – Gas Valve Outlet Pressure for Gas Heat Values at Altitude - 60,000

(Tabulated Data Based on 60,000 BTUH Input for 0-ft (0m) to 5400-ft (1646 M) above sea level)							
ALTITUDE RANGE ft (m)	AVG. GAS HEAT VALUE AT ALTITUDE (Btu/cu ft)	SPECIFIC GRAVITY OF NATURAL GAS					
		0.58	0.60	0.62	0.64	0.66	0.68
		Manifold Pressure					
0 (0) to 2000 (610)	900	2.8	2.9	3.0	3.1	3.1	3.1
	925	2.6	2.7	2.8	2.9	3.0	3.1
	950	2.5	2.6	2.7	2.8	2.9	2.9
	975	2.4	2.5	2.5	2.6	2.7	2.8
	1000	2.3	2.3	2.4	2.5	2.6	2.7
	1025	2.2	2.2	2.3	2.4	2.5	2.5
	1050	2.1	2.1	2.2	2.3	2.3	2.4
	1075	2.0	2.0	2.1	2.2	2.2	2.3
	1100	1.9	1.9	2.0	2.1	2.1	2.2
2001 (611) to 3000 (914)	800	3.0	3.1	3.1	3.1	3.1	3.1
	825	2.8	2.9	3.0	3.1	3.1	3.1
	850	2.7	2.8	2.9	3.0	3.0	3.1
	875	2.5	2.6	2.7	2.8	2.9	3.0
	900	2.4	2.5	2.6	2.6	2.7	2.8
	925	2.3	2.3	2.4	2.5	2.6	2.7
	950	2.1	2.2	2.3	2.4	2.4	2.5
	975	2.0	2.1	2.2	2.2	2.3	2.4
	1000	1.9	2.0	2.1	2.1	2.2	2.3
3001 (915) to 4000 (1219)	775	3.0	3.1	3.1	3.1	3.1	3.1
	800	2.8	2.9	3.0	3.1	3.1	3.1
	825	2.6	2.7	2.8	2.9	3.0	3.1
	850	2.5	2.6	2.6	2.7	2.8	2.9
	875	2.3	2.4	2.5	2.6	2.7	2.7
	900	2.2	2.3	2.4	2.4	2.5	2.6
	925	2.1	2.2	2.2	2.3	2.4	2.4
	950	2.0	2.0	2.1	2.2	2.3	2.3
	975	1.9	1.9	2.0	2.1	2.1	2.2
	1000	1.8	1.8	1.9	2.0	2.0	2.1
4001 (1220) to 5000 (1524)	750	2.9	3.0	3.1	3.1	3.1	3.1
	775	2.7	2.8	2.9	3.0	3.1	3.1
	800	2.6	2.7	2.8	2.8	2.9	3.0
	825	2.4	2.5	2.6	2.7	2.8	2.8
	850	2.3	2.4	2.4	2.5	2.6	2.7
	875	2.2	2.2	2.3	2.4	2.5	2.5
	900	2.0	2.1	2.2	2.2	2.3	2.4
	925	1.9	2.0	2.1	2.1	2.2	2.3
	950	1.8	1.9	2.0	2.0	2.1	2.1
	975	1.8	1.8	1.9	1.9	2.0	2.0
	1000	1.8	1.8	1.8	1.8	1.9	1.9
5001 (1525) to 5400 (1646)	725	2.9	3.0	3.1	3.1	3.1	3.1
	750	2.7	2.8	2.9	3.0	3.1	3.1
	775	2.6	2.7	2.8	2.8	2.9	3.0
	800	2.4	2.5	2.6	2.7	2.7	2.8
	825	2.3	2.3	2.4	2.5	2.6	2.7
	850	2.1	2.2	2.3	2.4	2.4	2.5
	875	2.0	2.1	2.2	2.2	2.3	2.4
	900	1.9	2.0	2.0	2.1	2.2	2.2
	925	1.8	1.9	1.9	2.0	2.1	2.1
	950	1.8	1.8	1.8	1.9	1.9	2.0
	975	1.8	1.8	1.8	1.8	1.9	1.9
	1000	1.8	1.8	1.8	1.8	1.8	1.8

Table 29 – Gas Valve Outlet Pressure for Gas Heat Values at Altitude - 80,000

(Tabulated Data Based on 80,000 BTUH Input for 0-ft (0m) to 5400-ft (1646 M) above sea level)							
ALTITUDE RANGE ft (m)	AVG. GAS HEAT VALUE AT ALTITUDE (Btu/cu ft)	SPECIFIC GRAVITY OF NATURAL GAS					
		0.58	0.60	0.62	0.64	0.66	0.68
		Manifold Pressure					
0 (0) to 2000 (610)	900	2.7	2.8	2.9	3.0	3.1	3.1
	925	2.6	2.7	2.8	2.8	2.9	3.0
	950	2.4	2.5	2.6	2.7	2.8	2.9
	975	2.3	2.4	2.5	2.6	2.6	2.7
	1000	2.2	2.3	2.4	2.4	2.5	2.6
	1025	2.1	2.2	2.2	2.3	2.4	2.5
	1050	2.0	2.1	2.1	2.2	2.3	2.3
	1075	1.9	2.0	2.0	2.1	2.2	2.2
	1100	1.8	1.9	1.9	2.0	2.1	2.1
2001 (611) to 3000 (914)	800	2.9	3.0	3.1	3.1	3.1	3.1
	825	2.8	2.9	3.0	3.1	3.1	3.1
	850	2.6	2.7	2.8	2.9	3.0	3.1
	875	2.5	2.5	2.6	2.7	2.8	2.9
	900	2.3	2.4	2.5	2.6	2.6	2.7
	925	2.2	2.3	2.4	2.4	2.5	2.6
	950	2.1	2.2	2.2	2.3	2.4	2.4
	975	2.0	2.0	2.1	2.2	2.3	2.3
	1000	1.9	1.9	2.0	2.1	2.1	2.2
3001 (915) to 4000 (1219)	775	2.9	3.0	3.1	3.1	3.1	3.1
	800	2.7	2.8	2.9	3.0	3.1	3.1
	825	2.6	2.6	2.7	2.8	2.9	3.0
	850	2.4	2.5	2.6	2.7	2.7	2.8
	875	2.3	2.4	2.4	2.5	2.6	2.7
	900	2.1	2.2	2.3	2.4	2.4	2.5
	925	2.0	2.1	2.2	2.2	2.3	2.4
	950	1.9	2.0	2.1	2.1	2.2	2.3
	975	1.8	1.9	2.0	2.0	2.1	2.1
	1000	1.8	1.8	1.9	1.9	2.0	2.0
4001 (1220) to 5000 (1524)	750	2.9	3.0	3.0	3.1	3.1	3.1
	775	2.7	2.8	2.9	2.9	3.0	3.1
	800	2.5	2.6	2.7	2.8	2.9	2.9
	825	2.4	2.4	2.5	2.6	2.7	2.8
	850	2.2	2.3	2.4	2.5	2.5	2.6
	875	2.1	2.2	2.2	2.3	2.4	2.5
	900	2.0	2.0	2.1	2.2	2.3	2.3
	925	1.9	1.9	2.0	2.1	2.1	2.2
	950	1.8	1.8	1.9	2.0	2.0	2.1
	975	1.8	1.8	1.8	1.9	1.9	2.0
	1000	1.8	1.8	1.8	1.8	1.8	1.9
5001 (1525) to 5400 (1646)	725	2.9	3.0	3.1	3.1	3.1	3.1
	750	2.7	2.8	2.9	3.0	3.0	3.1
	775	2.5	2.6	2.7	2.8	2.9	2.9
	800	2.4	2.4	2.5	2.6	2.7	2.8
	825	2.2	2.3	2.4	2.4	2.5	2.6
	850	2.1	2.2	2.2	2.3	2.4	2.4
	875	2.0	2.0	2.1	2.2	2.2	2.3
	900	1.9	1.9	2.0	2.0	2.1	2.2
	925	1.8	1.8	1.9	1.9	2.0	2.1
	950	1.8	1.8	1.8	1.8	1.9	2.0
	975	1.8	1.8	1.8	1.8	1.8	1.9
	1000	1.8	1.8	1.8	1.8	1.8	1.8

Table 30 – Gas Valve Outlet Pressure for Gas Heat Values at Altitude - 100,000

(Tabulated Data Based on 100,000 BTUH Input for 0-ft (0m) to 5400-ft (1646 M) above sea level)							
ALTITUDE RANGE ft (m)	AVG. GAS HEAT VALUE AT ALTITUDE (Btu/cu ft)	SPECIFIC GRAVITY OF NATURAL GAS					
		0.58	0.60	0.62	0.64	0.66	0.68
		Manifold Pressure					
0 (0) to 2000 (610)	900	2.7	2.8	2.9	3.0	3.1	3.1
	925	2.6	2.7	2.7	2.8	2.9	3.0
	950	2.4	2.5	2.6	2.7	2.8	2.9
	975	2.3	2.4	2.5	2.6	2.6	2.7
	1000	2.2	2.3	2.4	2.4	2.5	2.6
	1025	2.1	2.2	2.2	2.3	2.4	2.5
	1050	2.0	2.1	2.1	2.2	2.3	2.3
	1075	1.9	2.0	2.0	2.1	2.2	2.2
	1100	1.8	1.9	1.9	2.0	2.1	2.1
2001 (611) to 3000 (914)	800	2.9	3.0	3.1	3.1	3.1	3.1
	825	2.8	2.9	3.0	3.0	3.1	3.1
	850	2.6	2.7	2.8	2.9	3.0	3.1
	875	2.5	2.5	2.6	2.7	2.8	2.9
	900	2.3	2.4	2.5	2.6	2.6	2.7
	925	2.2	2.3	2.3	2.4	2.5	2.6
	950	2.1	2.2	2.2	2.3	2.4	2.4
	975	2.0	2.0	2.1	2.2	2.3	2.3
	1000	1.9	1.9	2.0	2.1	2.1	2.2
3001 (915) to 4000 (1219)	775	2.9	3.0	3.1	3.1	3.1	3.1
	800	2.7	2.8	2.9	3.0	3.1	3.1
	825	2.6	2.6	2.7	2.8	2.9	3.0
	850	2.4	2.5	2.6	2.7	2.7	2.8
	875	2.3	2.3	2.4	2.5	2.6	2.7
	900	2.1	2.2	2.3	2.4	2.4	2.5
	925	2.0	2.1	2.2	2.2	2.3	2.4
	950	1.9	2.0	2.1	2.1	2.2	2.3
	975	1.8	1.9	2.0	2.0	2.1	2.1
	1000	1.8	1.8	1.9	1.9	2.0	2.0
4001 (1220) to 5000 (1524)	750	2.8	2.9	3.0	3.1	3.1	3.1
	775	2.7	2.8	2.9	2.9	3.0	3.1
	800	2.5	2.6	2.7	2.8	2.8	2.9
	825	2.4	2.4	2.5	2.6	2.7	2.8
	850	2.2	2.3	2.4	2.4	2.5	2.6
	875	2.1	2.2	2.2	2.3	2.4	2.5
	900	2.0	2.0	2.1	2.2	2.3	2.3
	925	1.9	1.9	2.0	2.1	2.1	2.2
	950	1.8	1.8	1.9	2.0	2.0	2.1
	975	1.8	1.8	1.8	1.9	1.9	2.0
	1000	1.8	1.8	1.8	1.8	1.8	1.9
5001 (1525) to 5400 (1646)	725	2.8	2.9	3.0	3.1	3.1	3.1
	750	2.7	2.8	2.8	2.9	3.0	3.1
	775	2.5	2.6	2.7	2.7	2.8	2.9
	800	2.3	2.4	2.5	2.6	2.7	2.7
	825	2.2	2.3	2.3	2.4	2.5	2.6
	850	2.1	2.1	2.2	2.3	2.4	2.4
	875	2.0	2.0	2.1	2.2	2.2	2.3
	900	1.8	1.9	2.0	2.0	2.1	2.2
	925	1.8	1.8	1.9	1.9	2.0	2.0
	950	1.8	1.8	1.8	1.8	1.9	1.9
	975	1.8	1.8	1.8	1.8	1.8	1.8
	1000	1.8	1.8	1.8	1.8	1.8	1.8

SERVICE AND MAINTENANCE PROCEDURES

Untrained personnel can perform basic maintenance functions such as cleaning and replacing air filters. All other operations must be performed by trained service personnel. A qualified service person should inspect the furnace once a year.

General

These instructions are written as if the furnace is installed in an upflow application. An upflow furnace application is where the blower is located below the combustion and controls section of the furnace, and conditioned air is discharged upward. Since this furnace can be installed in any of the 3 positions (see Fig. 4), you must revise your orientation to component location accordingly.

⚠ WARNING

FIRE, INJURY OR DEATH HAZARD

Failure to follow this warning could result in personal injury, death and/or property damage.

The ability to properly perform maintenance on this equipment requires certain knowledge, mechanical skills, tools, and equipment. If you do not possess these, do not attempt to perform any service and maintenance on this equipment other than those procedures recommended in the Owner's Manual.

⚠ CAUTION

ENVIRONMENTAL HAZARD

Failure to follow this caution may result in environmental pollution.

Remove and recycle all components or materials (i.e. oil, refrigerant, control board, etc.) before unit final disposal.

⚠ WARNING

ELECTRICAL SHOCK, FIRE OR EXPLOSION HAZARD

Failure to follow this warning could result in personal injury or death, or property damage.

Before installing, modifying, or servicing system, main electrical disconnect switch must be in the OFF position and install a lockout tag. There may be more than one disconnect switch. Lock out and tag switch with a suitable warning label. Verify proper operation after servicing. Always reinstall access doors after completing service and maintenance.

⚠ CAUTION

ELECTRICAL OPERATION HAZARD

Failure to follow this caution may result in improper furnace operation or failure of furnace.

Label all wires prior to disconnection when servicing controls. Wiring errors can cause improper and dangerous operation.

⚠ CAUTION

ENVIRONMENTAL HAZARD

Failure to follow this caution may result in environmental pollution.

Remove and recycle all components or materials (i.e. oil, refrigerant, control board, etc.) before unit final disposal.

Electrical Controls and Wiring

⚠ WARNING

ELECTRICAL OPERATION HAZARD

Failure to follow this warning could result in personal injury or death.

There may be more than one electrical supply to the furnace. Check accessories and cooling unit for additional electrical supplies that must be shut off during furnace servicing. Lock out and tag switch with a suitable warning label.

The electrical ground and polarity for 115-V wiring must be properly maintained. See field wiring information (see Fig. 41) and for furnace wiring information (see Fig. 61).

NOTE: If the polarity is not correct, the STATUS LED on the control will flash rapidly and Status code (10 . 1) is displayed. This will prevent the furnace from heating. The control system also requires an earth ground for proper operation of the control and flame-sensing electrode.

The 24-V circuit contains an automotive-type, 3-amp. fuse located on the control, see Fig. 42. Any shorts of the 24-V wiring during installation, service, or maintenance will cause this fuse to blow. If fuse replacement is required, use ONLY a 3-amp. fuse. The control LED will display status code (24 . 1) when fuse needs to be replaced.

Proper instrumentation is required to service electrical controls. The control in this furnace is equipped with a Status Code LED (Light-Emitting Diode) and Major/Minor 3 digit codes to aid in installation, servicing, and troubleshooting. The furnace control LED is either ON continuously, rapid flashing or displaying a code composed of 2 digits. The major status code is displayed on the LED indicator through the door with the first digit being the number of short flashes and the second digit being the number of long flashes. The major status code is displayed in the first 2 digits of the display. The minor status code is displayed in the third digit.

For an explanation of status codes, refer to service booklet located on blower access door (see Fig. 60), by scanning the QR code or see Service guide at the end of this manual.

Retrieving Stored Fault Codes

The stored status code will not be erased from the control memory, if 115- or 24-V power is interrupted. See the Service Label, Fig. 60 for more information.

1. To retrieve the last 7 fault status code, proceed with the following:

NOTE: NO thermostat signal may be present at control, and all blower-OFF delays must be completed.

a. Remove blower access door.
b. Depress blower door switch to energize the control board.

⚠ CAUTION

SHOCK HAZARD

Failure to follow this caution could result in personal injury.

Do not tape or permanently allow the door switch to be bypassed. Temporarily press the door switch with one hand while accessing the service buttons with your other hand. Do not touch uninsulated electrical components.

c. Press menu/select button until (FLt) is displayed.
d. Press Next/Option button to cycle through the fault history. Faults remain in memory for 72 hours with the board powered after the last fault occurs. Faults may be manually cleared by selecting (CLr) with the menu/select button.

CARE AND MAINTENANCE

⚠ WARNING

FIRE OR EXPLOSION HAZARD

Failure to follow this warning could result in personal injury, death and/or property damage.

Never store flammable or combustible materials on, near, or in contact with the furnace, such as:

1. Spray or aerosol cans, rags, brooms, dust mops, vacuum cleaners, or other cleaning tools.
2. Soap powders, bleaches, waxes or other cleaning compounds, plastic or plastic containers, gasoline, kerosene, cigarette lighter fluid, dry cleaning fluids, or other volatile fluids.
3. Paint thinners and other painting compounds, paper bags, or other paper products. Exposure to these materials could lead to corrosion of the heat exchangers.

For continuing high performance and to minimize possible furnace failure, periodic maintenance must be performed on this furnace. Consult your local dealer and Owner's Manual about proper frequency of maintenance and the availability of a maintenance contract.

⚠ WARNING

ELECTRICAL SHOCK AND FIRE HAZARD

Failure to follow this warning could result in personal injury, death, and/or property damage.

Turn off the gas and electrical supplies to the furnace and install lockout tag before performing any maintenance or service. Follow the operating instructions on the label attached to the furnace.

⚠ WARNING

CARBON MONOXIDE POISONING AND FIRE HAZARD

Failure to follow this warning could result in personal injury, death and/or property damage.

Never operate furnace without a filter or filtration device installed. Never operate a furnace with filter or filtration device access doors removed.

⚠ CAUTION

CUT HAZARD

Failure to follow this caution may result in personal injury.

Sheet metal parts may have sharp edges or burrs. Use care and wear appropriate protective clothing, safety glasses and gloves when handling parts, and servicing furnaces.

The minimum maintenance on this furnace is as follows:

1. Check and clean air filter each month or more frequently if required. Replace if torn.
2. Check blower motor and wheel for cleanliness each heating and cooling season. Clean as necessary.
3. Check electrical connections for tightness and controls for proper operation each heating season. Service as necessary.
4. Inspect the vent pipe/vent system before each heating season for water leakage, sagging pipes or broken fittings. Have vent pipes/vent system serviced by a qualified service agency.
5. Inspect any accessories attached to the furnace such as a humidifier or electronic air cleaner. Perform any service or maintenance to the accessories as recommended in the accessory instructions.

Cleaning and/or Replacing Air Filter

⚠ WARNING

CARBON MONOXIDE POISONING AND FIRE HAZARD

Failure to follow this warning could result in personal injury, death and/or property damage.

Never operate furnace without a filter or filtration device installed. Never operate a furnace with filter or filtration device access doors removed.

The air filter type may vary depending on the application or orientation. The filter is external to the furnace casing. There are no provisions for an internal filter with this furnace. See "Filter Arrangement" under the "Installation" section of this manual.

NOTE: If the filter has an airflow direction arrow, the arrow must point toward the blower.

To clean or replace filters, proceed as follows:

⚠ WARNING

ELECTRICAL SHOCK, FIRE OR EXPLOSION HAZARD

Failure to follow this warning could result in personal injury or death, or property damage.

Before installing, modifying, or servicing system, main electrical disconnect switch must be in the OFF position and install a lockout tag. There may be more than one disconnect switch. Lock out and tag switch with a suitable warning label. Verify proper operation after servicing. Always reinstall access doors after completing service and maintenance.

1. Turn off electrical supply to furnace.
2. Remove filter cabinet door.
3. Slide filter out of cabinet.
4. If equipped with permanent, washable filter, clean filter by spraying cold tap water through filter in opposite direction of airflow. Rinse filter and let dry. Oiling or coating of the filter is not recommended.
5. If equipped with factory specified disposable media filter, replace only with a factory specified media filter of the same size.
6. Slide filter into cabinet.
7. Replace filter cabinet door.
8. Turn on electrical supply to furnace.

Blower Motor and Wheel Maintenance

⚠ WARNING

ELECTRICAL SHOCK HAZARD

Failure to follow this warning could result in personal injury or death.

Blower access door switch opens 115-V power to control. No component operation can occur unless switch is closed. Caution must be taken when manually closing this switch for service purposes.

NOTE: The blower wheel should not be dropped or bent as balance will be affected. The following steps should be performed by a qualified service agency.

To ensure long life and high efficiency, clean accumulated dirt and grease from blower wheel and motor annually.

The inducer and blower motors are pre-lubricated and require no additional lubrication.

Clean blower motor and wheel as follows:

1. Turn off electrical supply to furnace.
2. Remove blower door.
3. All factory wires can be left connected, but field thermostat connections may need to be disconnected depending on their length and routing.
4. Remove two screws holding blower assembly to blower deck and slide blower assembly out of furnace.
5. Clean blower wheel and motor using a vacuum with soft brush attachment. Blower wheel blades may be cleaned with a small paint or flux brush. Do not remove or disturb balance weights (clips) on blower wheel blades.
6. Vacuum any loose dust from blower housing, wheel and motor.
7. If a greasy residue is present on blower wheel, remove wheel from the blower housing and wash it with an appropriate degreaser. To remove wheel:

NOTE: Before disassembly, mark blower motor, and blower housing so motor and each arm is positioned at the same location during reassembly.

   a. Disconnect ground wire attached to blower housing.
   b. Remove screws securing cutoff plate and remove cutoff plate from housing.
   c. Loosen set screw holding blower wheel on motor shaft (160+/-20 in.-lb. when reassembling).
   d. Remove bolts holding motor to blower housing and slide motor out of wheel (40+/-10 in.-lb. when reassembling).
   e. Remove blower wheel from housing.
   f. Clean wheel and housing.

8. Reassemble motor and blower by reversing steps 7d finishing with 7a. Be sure to reattach ground wire to the blower housing.
9. 66100M21Verify that blower wheel is centered in blower housing and set screw contacts the flat portion of the motor shaft. Loosen set screw on blower wheel and reposition if necessary.
10. Spin the blower wheel by hand to verify that the wheel does not rub on the housing.
11. Reinstall blower assembly in furnace.
12. Reinstall two screws securing blower assembly to blower deck.
13. Refer to furnace wiring diagram, and connect thermostat leads if previously disconnected.
14. To check blower for proper rotation:
   a. Turn on electrical supply.

⚠ WARNING

ELECTRICAL SHOCK HAZARD

Failure to follow this warning could result in personal injury, or death.

Blower access door switch opens 115-V power to furnace control. No component operation can occur unless switch is closed. Exercise caution to avoid electrical shock from exposed electrical components when manually closing this switch for service purposes.

   b. Manually close blower access door switch.
   c. Verify blower is rotating in the correct direction.

15. If furnace is operating properly, RELEASE BLOWER ACCESS DOOR SWITCH. Remove any jumpers or reconnect any disconnected thermostat leads.
16. Replace blower access door.
17. Cycle furnace through one complete heating and cooling cycle. Verify the furnace temperature rise as shown in “Adjustments” Section. Adjust temperature rise as shown in “Adjustments” Section. If outdoor temperature is below 70°F, (21°C) turn off circuit breaker to outdoor unit before running furnace in the cooling cycle. Turn outdoor circuit breaker on after completing cooling cycle.

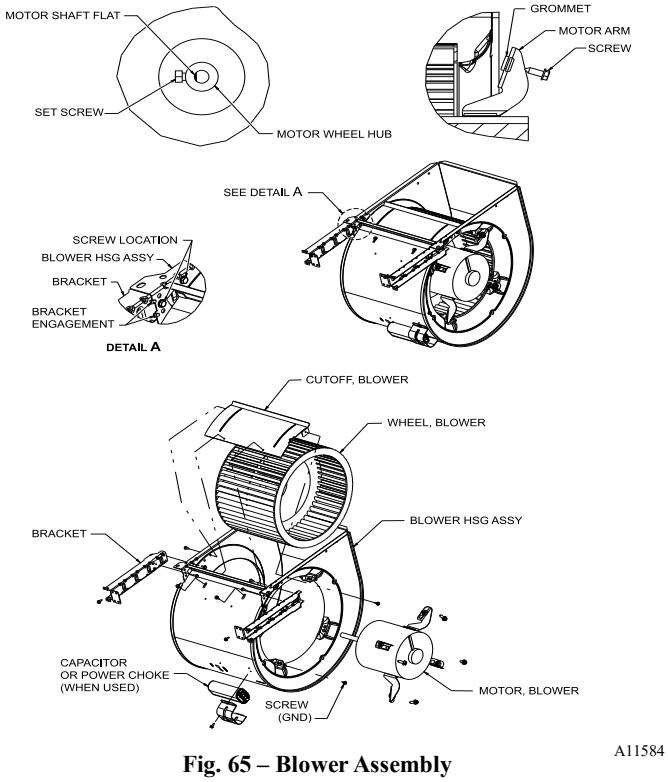

Fig. 65 – Blower Assembly

Fig. 66 –

⚠ WARNING

ELECTRICAL OPERATION HAZARD

Failure to follow this warning could result in personal injury or death.

Blower door switch opens 115-V power to control. No component operation can occur unless switch is closed. Caution must be taken when manually closing this switch for service purposes.

Cleaning Flame Sensor

The following items must be performed by a qualified service technician. If the Flame Sensor develops an accumulation of light dirt or dust, it may be cleaned by using the following procedure:

⚠ WARNING

ELECTRICAL SHOCK AND FIRE HAZARD

Failure to follow this warning could result in personal injury, death, and/or property damage.

Turn off the gas and electrical supplies to the furnace and install lockout tag before performing any maintenance or service. Follow the operating instructions on the label attached to the furnace.

⚠ WARNING

FIRE OR EXPLOSION HAZARD

Failure to follow this warning could result in personal injury, death, and/or property damage.

When servicing the flame sensor, only use the factory-provided 1/4-in. length screws. Use of alternate screws will damage unit components.

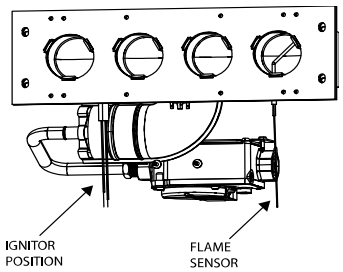

A190266

Fig. 67 – Igniter Position - Back View

1. Disconnect power at external disconnect, fuse or circuit breaker.
2. Turn off gas at external shut-off or gas meter.
3. Remove control door and set aside.
4. Turn electric switch on gas valve to OFF.
5. Disconnect Flame Sensor wire from Flame Sensor.
6. Remove the flame sensor burner assembly.
   a. Using a 1/4-in. driver, remove the screw securing the flame sensor to the burner assembly (see Fig. 67). Retain factory-provided 1/4-in. screws.
   b. Carefully withdraw the flame sensor from the burner assembly without striking the sensor on surrounding parts.
   c. Inspect flame sensor for signs of damage or failure.
   d. Clean the flame sensor with fine steel wool (0000 grade). Do not use sand paper or emery cloth.
   e. If replacement is required, remove the screw that secures the flame sensor on the bracket and remove the flame sensor.
7. To replace flame sensor and bracket assembly, reverse items 6a through 6d.
8. Reconnect flame sensor wire to the wire harness, dressing the sensor wires to ensure there is no tension on the flame sensor itself (see Fig. 67).

⚠ WARNING

FIRE OR EXPLOSION HAZARD

Failure to follow this warning could result in personal injury, death, and/or property damage.

Never purge a gas line into a combustion chamber. Never test for gas leaks with an open flame. Use a commercially available soap solution made specifically for the detection of leaks to check all connections. A fire or explosion may result causing property damage, personal injury or loss of life.

9. Turn gas on at electric switch on gas valve and at external shut-off or meter
10. Turn power on at external disconnect, fuse or circuit breaker.
11. Run the furnace through two complete heating cycles to check for proper operation
12. Install control door when complete.

Servicing Hot Surface Igniter

⚠ WARNING

FIRE OR EXPLOSION HAZARD

Failure to follow this warning could result in personal injury, death, and/or property damage.

When servicing the flame sensor, only use the factory-provided 1/4-in. length screws. Use of alternate screws will damage unit components.

The igniter does **NOT** require annual inspection. Check igniter resistance before removal (see Fig. 67).

1. Turn off gas and electrical supplies to furnace.
2. Remove control door.
3. Disconnect igniter wire connection.
4. Check igniter resistance. Igniter resistance is affected by temperature. Only check resistance when the igniter is at room temperature.
   a. Using an ohm meter, check resistance across both igniter leads in connector.
   b. Cold reading should be between 40 ohms and 70 ohms.
5. Remove igniter assembly.
   a. Using a 1/4-in. driver, remove the two screws securing the igniter mounting bracket to the burner assembly (see Fig. 67). Retain 1/4-in. length screws.
   b. Carefully withdraw the igniter and bracket assembly through the burner assembly without striking the igniter on surrounding parts.
   c. Inspect igniter for signs of damage or failure.
   d. Inspect the igniter gasket. If damaged or missing, replace gasket before reinstalling.
6. To replace igniter and bracket assembly, reverse items 5a through 5d.
7. Reconnect igniter harness to the igniter, dressing the igniter wires to ensure there is no tension on the igniter itself (see Fig. 67).
8. Turn on gas and electrical supplies to furnace.
9. Verify igniter operation by initiating control board self-test feature. Run the furnace through two complete heating cycles to check for proper operation.
10. Replace control door.

Flushing Collector Box and Drainage System

⚠ WARNING

ELECTRICAL SHOCK AND FIRE HAZARD

Failure to follow this warning could result in personal injury, death, and/or property damage.

Turn off the gas and electrical supplies to the furnace and install lockout tag before performing any maintenance or service. Follow the operating instructions on the label attached to the furnace.

1. Turn off gas and electrical supplies to furnace.
2. Remove control door.
3. Disconnect pressure transducer tube from pressure transducer port.

NOTE: Ensure the pressure transducer tube disconnected from the pressure transducer is higher than the collector box opening or water will flow out of tube.

4. Remove the collector box plug from the top port on the upper corner of the collector box (see Fig. 62).
5. Attach a funnel with a flexible tube to port on the collector box.
6. Flush inside of collector box with water until discharge water from condensate trap is clean and runs freely.
7. Repeat steps 4 through 6 with middle plug on upper corner of collector box.
8. Remove the pressure transducer tube from the collector box.

NOTE: Do **NOT** blow into tube with tube connected to the pressure transducer.

9. Clean pressure transducer port on collect box with a small wire. Shake any water out of pressure transducer tube.
10. Reconnect tube to pressure transducer and pressure transducer port.
11. Remove the relief tube from the port on the collector box and the trap.

12. Clean the relief port on collector box and the trap with a small wire. Shake any water out of the tube.
13. Reconnect relief tube to trap and collector box ports.

Cleaning Condensate Drain and Trap

NOTE: If the condensate trap is removed, a new gasket between the trap and collector box is required. Verify a condensate trap gasket is included in the service kit or obtain one from your local distributor.

1. Reverse installation instructions found in Condensate Trap Section to disassemble the condensate trap.
2. Use water or a slight brush to clean components. Do NOT cut into glued PVC sections to service the trap.
3. Ensure all instructions, cautions, and warning from Condensate Trap Section are followed when reassembling condensate trap.

Checking Heat Tape Operation (If Applicable)

In applications where the ambient temperature around the furnace is 32°F or lower, freeze protection measures are required. If this application is one where heat tape has been applied, check to ensure it will operate when low temperatures are present.

NOTE: The Heat Tape, when used, should be wrapped around the condensate drain trap. There is no need to use heat tape within the furnace casing. Most heat tapes are temperature activated, and it is not practical to verify the actual heating of the tape. Check the following:

1. Check for signs of physical damage to heat tape such as nicks, cuts, abrasions, gnawing by animals, etc.
2. Check for discolored heat tape insulation. If any damage or discolored insulation is evident, replace heat tape.
3. Check that heat tape power supply circuit is on.

Cleaning Heat Exchangers

The following items must be performed by a qualified service technician.

Primary Heat Exchangers

IMPORTANT: It is not recommended to clean the heat exchanger as part of annual maintenance.

If there is reason to believe that primary heat exchanger is obstructed and cleaning is needed, remove burner assembly to access heat exchanger and follow steps below.

Once burner assembly is removed, gasket of the burner box MUST be replaced with a new gasket.

NOTE: If the heat exchangers get a heavy accumulation of soot and carbon, both the primary and secondary heat exchangers should be replaced rather than trying to clean them thoroughly due to their intricate design. A build-up of soot and carbon indicates that a problem exists which needs to be corrected, such as improper adjustment of manifold pressure, insufficient or poor quality combustion air, improper vent termination, incorrect size or damaged manifold orifice(s), improper gas, or a restricted heat exchanger (primary or secondary). Action must be taken to correct the problem.

NOTE: Proper use of Personal Protective Equipment (PPE) must be followed, including safety glasses, gloves, and dust mask when removing and reinstalling the heat exchanger insulation assembly.

1. Turn off gas and electrical supplies to furnace.

⚠ WARNING

ELECTRICAL SHOCK, FIRE OR EXPLOSION HAZARD

Failure to follow this warning could result in personal injury or death, or property damage.

Before installing, modifying, or servicing system, main electrical disconnect switch must be in the OFF position and install a lockout tag. There may be more than one disconnect switch. Lock out and tag switch with a suitable warning label. Verify proper operation after servicing. Always reinstall access doors after completing service and maintenance.

⚠ WARNING

ELECTRICAL SHOCK AND FIRE HAZARD

Failure to follow this warning could result in personal injury, death, and/or property damage.

Turn off the gas and electrical supplies to the furnace and install lockout tag before performing any maintenance or service. Follow the operating instructions on the label attached to the furnace.

2. Remove control door.
3. Disconnect wires or connectors to burner thermal switch, gas valve, igniter, and flame sensor.
4. Using backup wrench, disconnect gas supply pipe from furnace gas control valve.
5. Remove screws attaching burner assembly to cell panel.

NOTE: Burner, manifold, gas valve, and orifice should be removed as one assembly.

6. Carefully remove burner insulation assembly, Insulation MUST be replaced before reassembly.
7. Clean heat exchanger openings with a vacuum and a soft brush (see Fig. 68).

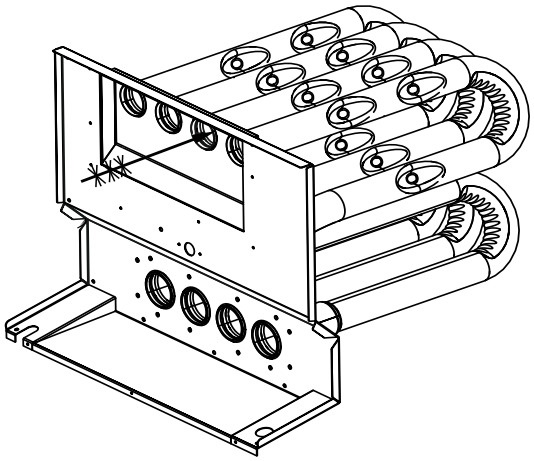

A190291

Representative drawing only, some models may vary in appearance.

Fig. 68 – Cleaning Heat Exchanger Cell

NOTE: After cleaning, inspect the heat exchangers to ensure they are free of all foreign objects that may restrict flow of combustion products.

8. Reverse items 6 through 1 for reassembly. Torque burner screws to 45 inch-pound to ensure a tight burner seal.
9. Refer to furnace wiring diagram and reconnect wires to burner thermal switch, gas valve, igniter, and flame sensor.
10. Turn on gas and electrical supplies to furnace.

11. Check furnace operation through two complete heat operating cycles.
12. Check for gas leaks.

⚠ WARNING

FIRE OR EXPLOSION HAZARD

Failure to follow this warning could result in personal injury, death, and/or property damage.

Never purge a gas line into a combustion chamber. Never test for gas leaks with an open flame. Use a commercially available soap solution made specifically for the detection of leaks to check all connections. A fire or explosion may result causing property damage, personal injury or loss of life.

13. Replace main furnace door.

Secondary Heat Exchangers

The condensing side (inside) of the secondary heat exchanger CANNOT be serviced or inspected without complete removal of the heat exchanger assembly. Detailed information on heat exchanger removal can be obtained from your Distributor.

WINTERIZATION

⚠ CAUTION

UNIT AND PROPERTY DAMAGE HAZARD

Failure to follow this caution may result in unit component or property damage.

If the furnace is installed in an unconditioned space where the ambient temperatures may be 32°F (0°C) or lower, freeze protection measures must be taken to prevent minor property or product damage.

Since the furnace uses a condensing heat exchanger, some water will accumulate in the unit as a result of the heat transfer process. Therefore, once it has been operated, it cannot be turned off and left off for an extended period of time when temperatures will reach 32°F (0°C) or lower unless winterized. Follow these procedures to winterize your furnace:

⚠ CAUTION

UNIT COMPONENT DAMAGE HAZARD

Failure to follow this caution may result in damage to the furnace and other property damage.

Do not use ethylene glycol (automotive antifreeze coolant or equivalent). Failure of plastic components may occur.

1. Obtain propylene glycol (RV/swimming pool antifreeze or equivalent).
2. Turn off gas and electrical supplies to your furnace.
3. Remove furnace control door.
4. Remove the top unused rubber plug from the port on the collector box opposite the condensate trap.
5. Connect a field supplied 3/8-in. (9.5-mm) ID tube to the open port on the collector box.
6. Insert a field supplied funnel into the tube.
7. Pour one quart (liter) of anti-freeze solution into the funnel/tube. Antifreeze should run through the inducer housing, overfill condensate trap and flow to an open drain.
8. Replace the rubber plug in the port on the collector box.
9. Remove the middle unused rubber plug from the port on the collector box opposite the condensate trap.
10. Repeat Steps 5 through 8.
11. If a condensate pump is used, check with pump manufacturer to verify pump is safe for use with antifreeze used. Allow pump to start and pump anti-freeze to open drain.
12. Replace main door.
13. When furnace is re-started, flush condensate pump with clear water to check for proper operation before re-starting furnace.

Propylene glycol need not be removed before re-starting furnace.

SEQUENCE OF OPERATION

NOTE: Furnace control must be grounded for proper operation of furnace control and flame sensing electrode. Control is grounded through green/yellow wire routed to gas valve and burner box screw. Using the schematic diagram in Fig. 61, follow the sequence of operation through the different modes. Read and follow the wiring diagram very carefully.

NOTE: If a power interruption occurs during a call for heat W, the control will start a 90-second blower-only ON period 2 seconds after power is restored, if the thermostat is still calling for gas heating. The LED light will flash code 12 and display will show (12 . 1) during the 90-second period, after which the LED will be ON continuous, as long as no faults are detected. After the 90-second blower-ON period, the furnace will respond to the thermostat normally.

NOTE: If BTS happens to be open as well, the inducer will operate during the 90 seconds. If the BTS does not reset during this time, a permanent lockout will result and power must be cycled to reset. The LED light will flash code 26 (display will show 26 . 1).

The blower door must be installed for power to be conducted through the blower door interlock switch ILK to the furnace control CPU, transformer TRAN, inducer motor IDM, blower motor BLWM, hot-surface igniter HSI, and gas valve GV.

1. **Call for Heat:**
   The wall thermostat “calls for heat”, closing the R-W circuit. The furnace control performs a self-check, verifies the transducer reads no pressure present, and starts the inducer motor IDM ramp to prepurge
   a. **Inducer Prepurge Period:** The furnace control CPU ramps up the inducer motor IDM to prepurge pressure then the furnace control CPU begins a 15-second prepurge period. If the transducer fails to reach target pressure the inducer motor IDM will remain running until target pressure is maintained.
   b. **Igniter Warm-Up:** At the end of the prepurge period, the Hot-Surface Igniter HSI is energized for a 17-second igniter warm-up period. Inducer maintains pressure during igniter warm-up. If inducer prepurge and igniter watm up sequence is not completed in 5 minutes, the unit will shut down and LED light will flash code 31. Retry occurs after 2 minutes.
   c. **Trial for Ignition:** When the igniter warm-up period is completed the main gas valve relay contact GVR closes to energize the gas valve solenoid GV. The gas valve solenoid GV permits gas flow to the burners where it is ignited by the HSI. Five seconds after the GVR closes, a 2-second flame proving period begins. The HSI igniter will remain energized until the flame is sensed or until the 2-second flame proving period begins.
   d. **Flame Proving:** When the burner flame is proved at the flame sensor electrode FSE, the inducer motor IDM will increase speed (after a short delay of 14 seconds on some modes) to a higher RUN pressure. The control will maintain this pressure once reached, and the furnace control CPU will begin the blower-ON delay period while continuing to hold the gas valve GV open. If the burner flame is not proved within the 2-second flame proving period, the control CPU will open the gas valve relay GVR, de-energizing the gas valve solenoid GV. The control CPU will repeat the ignition sequence for up to three more

Trials-for-Ignition before going to an Ignition-Lockout. Lockout will be reset automatically after 3 hours, or by momentarily interrupting 115 VAC power to the furnace, or by interrupting 24 VAC power at SEC1 or SEC2 to the furnace control CPU (not at W, G, R, etc.). If flame is proved when flame should not be present, the furnace control CPU will lock out of Heating mode and operate the inducer motor IDM until flame is no longer proved.

e. **Blower-ON Delay:** If the burner flame is proven, the blower motor is turned on at HEAT speed 25 seconds after the gas valve GV is energized.
Simultaneously, the humidifier terminal HUM and electronic air cleaner terminal EAC-1 are energized and remain energized throughout the heating cycle.

f. **Blower-OFF Delay:** When the thermostat is satisfied, the R to W circuit is opened, de-energizing the gas valve GV, stopping gas flow to the burners, and de-energizing the humidifier terminal HUM. The inducer motor IDM will remain energized for a 15-second post-purge period. The blower motor BLWM and air cleaner terminal EAC-1 will remain ON at heat airflow for 90, 120, 150, or 180 seconds (depending on the blower-OFF delay selection). The furnace control CPU is factory-set for a 120-second blower-OFF delay.

2. The thermostat “calls for cooling”.

a. **Single-Speed Cooling-**
The thermostat closes the R-to-G-and-Y circuits. The R-to-Y circuit starts the outdoor unit, and the R-to-G-and-Y/Y2 circuits start the furnace blower motor BLWM on COOL speed. The electronic air cleaner terminal EAC-1 is energized with 115 VAC when the blower motor BLWM is operating.
When the thermostat is satisfied, the R-to-G-and-Y/Y2 circuits are opened. The outdoor unit will stop, and the furnace blower motor BLWM will continue operating on the COOL speed for an additional 5, 30, or 90 seconds (depending on the cooling blower-OFF delay selection). The furnace CPU is factory set for a 90 second cooling blower-OFF delay. (See Fig. 61).

b. Two-Stage Thermostat and Two-Speed Cooling
The thermostat closes the R-to-G-and-Y1 circuits for low-cooling or closes the R-to-G-and-Y1-and-Y/Y2 circuits for high-cooling. The R-to-Y1 circuit starts the outdoor unit on low-cooling speed, and the R-to-G-and-Y1 circuit starts the furnace blower motor BLWM at low-cooling airflow. The R-to-Y1-and-YY/2 circuits start the outdoor unit on high-cooling speed, and the R-to-G-and-Y/Y2 circuits start the furnace blower motor BLWM at high-cooling airflow. Terminal EAC-1 is energized with as long as the blower mooter BLWM is ON.
When the thermostat is satisfied, the R-to-G-and-Y1 or R-to-G-and-Y1-and-Y2 circuits are opened. The outdoor unit stops, and the furnace blower BLWM and electronic air cleaner terminal EAC-1 will remain energized for an additional 90-seconds.

3. **Continuous Fan Mode**
When the R-to-G circuit is closed by the thermostat, the blower motor BLWM will operate at the continuous-blower speed selected. Terminal EAC-1 is energized as long as the blower motor BLWM is ON. During a call for heat, the blower BLWM will stop during igniter warm-up (17 sec), ignition (7 sec), and blower-ON delay (25 sec), allowing the furnace heat exchangers to heat up more quickly, then restarts at the end of the blower-ON delay period at HEAT speed.
In heating, the furnace control CPU will hold the blower motor BLWM at HEAT speed during the selected blower-OFF delay period before reverting to continuous-blower speed. When the thermostat “calls for low-cooling”, the blower motor BLWM will switch to operate at low-cool speed. When the thermostat is satisfied, the blower motor BLWM will operate at low-cooling speed for the cooling off delay setting time before reverting back to continuous-blower speed.
When the thermostat “calls for high-cooling”, the blower motor BLWM will operate at COOL speed. When the thermostat is satisfied, the blower motor BLWM will operate at high-cooling speed for the cooling off delay setting time before reverting back to continuous-blower speed. When the R-to-G circuit is opened, the blower motor BLWM will continue operating for an additional 5 sec, if no other function requires blower motor BLWM operation.

4. **Heat pump**
When installed with a heat pump, the furnace control automatically changes the timing sequence to avoid long blower off times during demand defrost cycles. Whenever W is energized along with Y1 or Y/Y2, the furnace control CPU will transition to or bring on the blower motor BLWM at cooling airflow or heat airflow whichever is lowest. The blower motor BLWM will remain on until the main burners ignite then shut OFF and remain OFF for 25 seconds before coming back on at heating airflow. When the W input signal disappears, the furnace control begins a normal inducer post-purge period while changing the blower airflow. If Y/Y2 input is still energized the furnace control CPU will transition the blower motor BLWM airflow to cooling airflow. If Y/Y2 input signal disappears and the Y1 input is still energized the furnace control CPU will transition the blower motor BLWM to low-cooling airflow. If both the Y1 and Y/Y2 signals disappear at the same time, the blower motor BLWM will remain on at heat airflow for the selected blower-OFF delay period. If the R-to-W-and-Y1 signals disappear, leaving the G signal, the furnace control CPU will transition the blower motor BLWM to CONTINUOUS FAN speed after the selected heating blower-OFF delay period.

Wiring Diagrams

Refer to Fig. 61 for wiring diagram.

Troubleshooting

Refer to the service label. (see Fig. 60), wiring diagram (see Fig. 61), and the Troubleshooting Guide (see Fig. 69) can be a useful tool in isolating furnace operation problems. The Guide will help to identify the problem or failed component. After replacing any component, verify correct operation sequence.

TROUBLESHOOTING

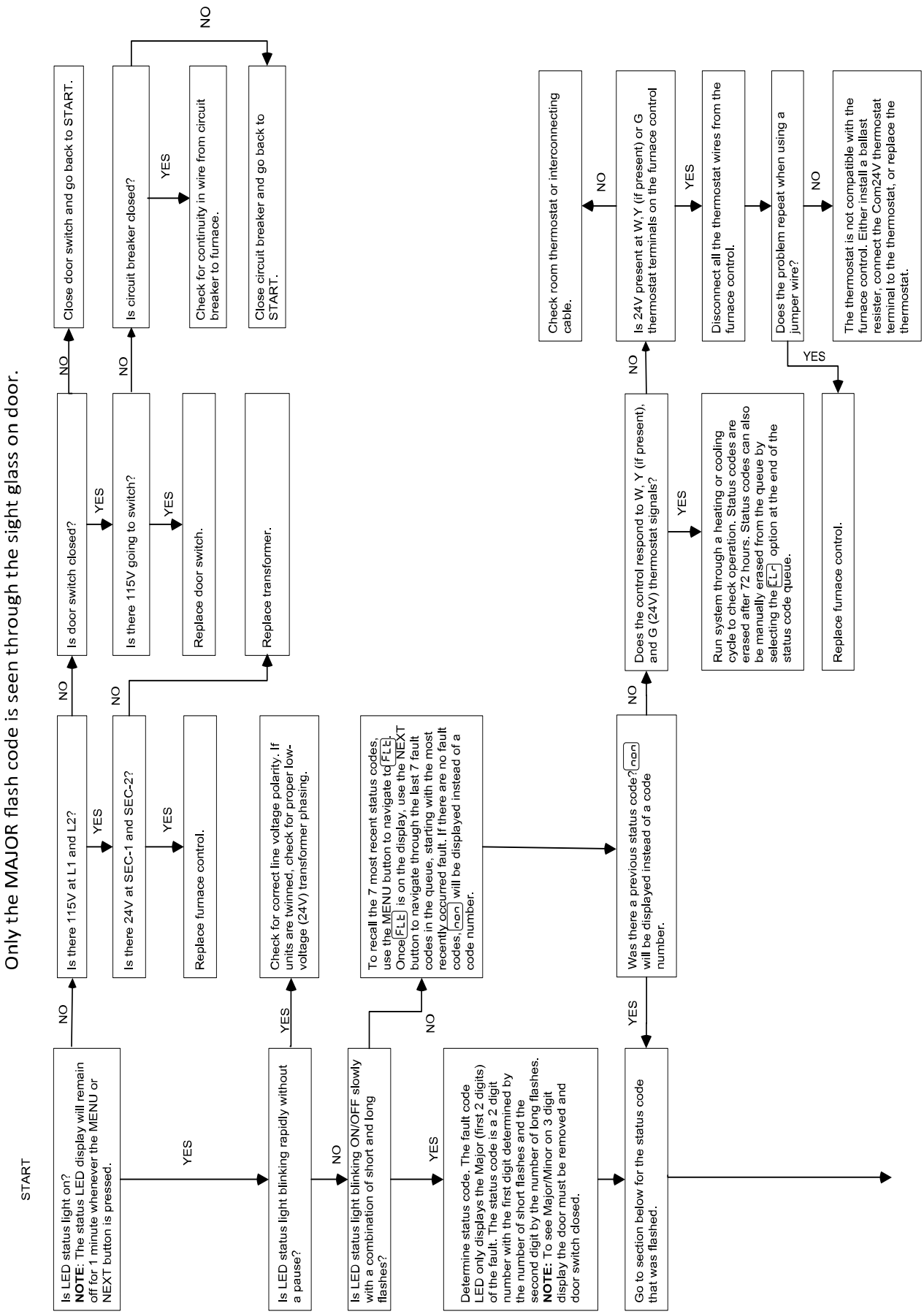

A221103

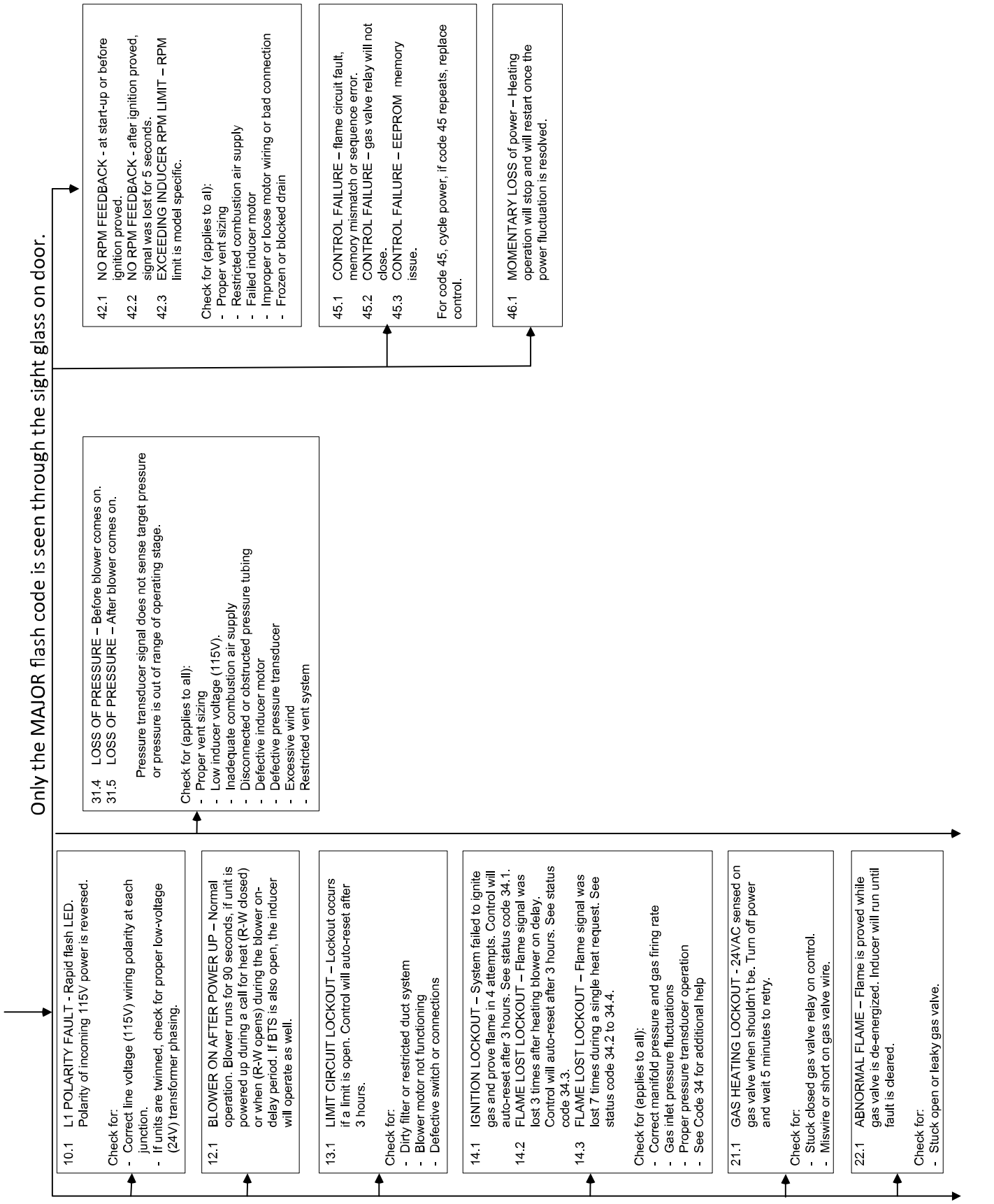
Only the MAJOR flash code is seen through the sight glass on door.
10.1 L1 POLARITY FAULT - Rapid flash LED. Polarity of incoming 115V power is reversed.
Check for:
- Correct line voltage (115V) wiring polarity at each junction.
- If units are twinned, check for proper low-voltage (24V) transformer phasing.
12.1 BLOWER ON AFTER POWER UP – Normal operation. Blower runs for 90 seconds, if unit is powered up during a call for heat (R-W closed) or when (R-W opens) during the blower on-delay period. If BTS is also open, the inducer will operate as well.
13.1 LIMIT CIRCUIT LOCKOUT – Lockout occurs if a limit is open. Control will auto-reset after 3 hours.
Check for:
- Dirty filter or restricted duct system
- Blower motor not functioning
- Defective switch or connections
14.1 IGNITION LOCKOUT – System failed to ignite gas and prove flame in 4 attempts. Control will auto-reset after 3 hours. See status code 34.1.
14.2 FLAME LOST LOCKOUT – Flame signal was lost 3 times after heating blower on delay. Control will auto-reset after 3 hours. See status code 34.3.
14.3 FLAME LOST LOCKOUT – Flame signal was lost 7 times during a single heat request. See status code 34.2 to 34.4.
Check for (applies to all):
- Correct manifold pressure and gas firing rate
- Gas inlet pressure fluctuations
- Proper pressure transducer operation
- See Code 34 for additional help
21.1 GAS HEATING LOCKOUT - 24VAC sensed on gas valve when shouldn't be. Turn off power and wait 5 minutes to retry.
Check for:
- Stuck closed gas valve relay on control.
- Miswire or short on gas valve wire.
22.1 ABNORMAL FLAME – Flame is proved while gas valve is de-energized. Inducer will run until fault is cleared.
Check for:
- Stuck open or leaky gas valve.
31.4 LOSS OF PRESSURE – Before blower comes on.
31.5 LOSS OF PRESSURE – After blower comes on.
Pressure transducer signal does not sense target pressure or pressure is out of range of operating stage.
Check for (applies to all):
- Proper vent sizing
- Low inducer voltage (115V).
- Inadequate combustion air supply
- Disconnected or obstructed pressure tubing
- Defective inducer motor
- Defective pressure transducer
- Excessive wind
- Restricted vent system
42.1 NO RPM FEEDBACK - at start-up or before ignition proved.
42.2 NO RPM FEEDBACK - after ignition proved, signal was lost for 5 seconds.
42.3 EXCEEDING INDUCER RPM LIMIT – RPM limit is model specific.
Check for (applies to al):
- Proper vent sizing
- Restricted combustion air supply
- Failed inducer motor
- Improper or loose motor wiring or bad connection
- Frozen or blocked drain
45.1 CONTROL FAILURE – flame circuit fault, memory mismatch or sequence error.
45.2 CONTROL FAILURE – gas valve relay will not close.
45.3 CONTROL FAILURE – EEPROM memory issue.
For code 45, cycle power, if code 45 repeats, replace control.
46.1 MOMENTARY LOSS of power – Heating operation will stop and will restart once the power fluctuation is resolved.

A221107

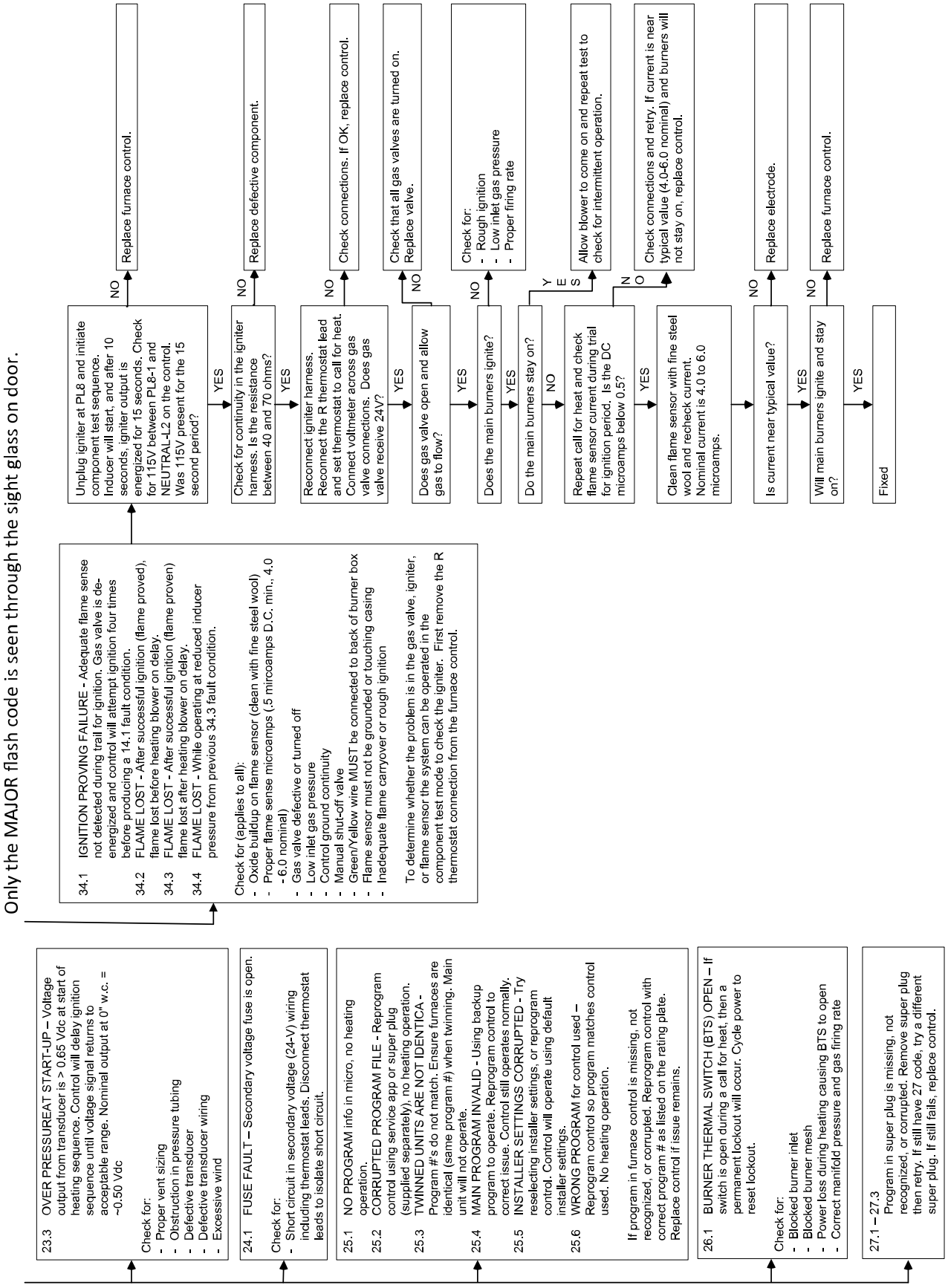

Fig. 69 – Troubleshooting Guide

PARTS REPLACEMENT INFORMATION GUIDE

Casing Group

Blower door
Bottom plate
Control door
Door knob assembly
Top filler plate

Electrical Group

3-Amp fuse
Circuit board
Super plug
Control box
Door switch
Junction box
Limit switch(es)
Transformer

Blower Group

Blower housing
Blower motor
Blower wheel
Cut-off plate

Filter Group

Filter(s)
Media Cabinet (when used)

Gas Control Group

Burner
Flame sensor
Gas valve
Hot surface igniter
Manifold
Orifice

Heat Exchanger Group

Containment plate
Coupling box
Heat exchanger assembly
Primary HX cell panel
Secondary HX assembly
Tubing gaskets

Inducer Group

Collector box
Condensate trap
Condensate trap elbow
Gaskets
Transducer
Inducer motor
Inducer wheel
Vent elbow assembly

TO OBTAIN INFORMATION ON PARTS: Consult your installing dealer or a licensed Heating and Air Conditioning company of your choice:

CAC/BDP
a division of Carrier Corporation
7310 West Morris Street
Indianapolis, IN 46231 U.S.A.

Have available the model number, series number, and serial number located on the unit rating plate to ensure correct replacement part.

MODEL NOMENCLATURE

MODEL	MAJOR SERIES	COOLING CAPACITY	HEATING INPUT	WIDTH	MINOR SERIES	VARIATIONS
PG95MSU	A	48	060	B	A	A

⚠ WARNING

FIRE, EXPLOSION, ELECTRICAL SHOCK AND CARBON MONOXIDE POISONING HAZARD

Failure to follow this warning could result in dangerous operation, personal injury, death or property damage.

Improper installation, adjustment, alteration, service, or maintenance can cause personal injury, property damage, or death. Consult a qualified installer, service agency, or your local gas supplier for information or assistance. The qualified installer or service agency must use only factory-authorized replacement parts, kits, or accessories when modifying this product.

© 2023 Carrier. All rights reserved.

Manufacturer reserves the right to change, at any time, specifications and designs without notice and without obligatioRns.