PG9MAB

4–WAY MULTIPOISE FIXED–CAPACITY CONDENSING GAS FURNACE SIZES 040–140, SERIES B

Installation, Start-up and Operating Instructions

Visit www.Payne.com

NOTE: Read the entire instruction manual before starting the installation.

NOTE: This furnace can be installed as a **(2-pipe) direct vent or (1-pipe) non-direct vent** condensing gas furnace.

Special Venting Requirements for Installations in Canada

Installation in Canada must conform to the requirements of CSA B149 code. Vent systems **must** be composed of pipe, fittings, cements, and primers listed to ULC S636. The special vent fittings and accessory concentric vent termination kits and accessory external drain trap have been certified to ULC S636 for use with those IPEX PVC vent components which have been certified to this standard. In Canada, the primer and cement must be of the same manufacturer as the vent system - IPEX System 636, PVC/CPVC Primer, Purple Violet for Flue Gas Venting and IPEX System 636(1)™, PVC Cement for Flue Gas Venting, rated Class IIA, 65 deg C. must be used with this venting system - do not mix primers and cements from one manufacturer with a vent system from a different manufacturer. Follow the manufacturer's instructions in the use of primer and cement and never use primer or cement beyond its expiration date.

The safe operation, as defined by ULC S636, of the vent system is based on following these installation instructions, the vent system manufacturer's installation instructions, and proper use of primer and cement. All fire stop and roof flashing used with this system must be UL listed material. Acceptability under Canadian standard CSA B149 is dependent upon full compliance with all installation instructions. Under this standard, it is recommended that the vent system be checked once a year by qualified service personnel.

The authority having jurisdiction (gas inspection authority, municipal building department, fire department, etc) should be consulted before installation to determine the need to obtain a permit.

Consignes spéciales pour l'installation de ventillation au Canada

L'installation faite au Canada doit se conformer aux exigences du code CSA B149. Ce systême de ventillation **doit** se composer de tuyaux, raccords, ciments et apprêts conformes au ULC S636. La tuyauterie de ventillation des gaz, ses accessoires, le terminal concentrique mural ainsi que l'ensemble du drain de condensat extérieur ont été certifiés ULCS 636 pour l'application des composantes IPEX PVC qui sont certifiées à ce standard. Au Canada l'apprêt et le ciment doivent être du même manufacturier que le systême de ventillation - IPEX Système 636, Apprêt PVC/CPVC. Mauve Violette pour conduit en évacuation des gaz et IPEX Système 636(1)™, ciment pour PVC pour conduit en évacuation des gaz, évalué CLASSE IIA, 65 deg. C. doit ëtre utilisé avec ce systèeme d'évacuation - ne pas mélanger l'apprêt et le ciment d'un manufacturier avec le systême de ventillation d'un autre manufacturier. Bien suivre les indications du manufacturier lors de l'utilisation de l'apprêt et du ciment et ne pas utiliser ceux-ci si la date d'expiration est atteinte.

L'opération sécuritaire, tel que définit par ULC S636, du système de ventilation est basé sur les instructions d'installation suivantes, ainsi que l'usage approprié de l'apprêt et ciment. Tout arrët feu et solin de toit utilisés avec ce système doivent être des matériaux listés UL. L'acceptation du standard Canadien CSA B419 est directement relié à l'installation conforme aux instructions ci-haut mentionnées. Le standard Canadien recommande l' inspection par un personel qualifié et ce, une fois par année.

Les autoritées ayant juridiction (inspecteurs de gas, inspecteurs en bâtiments, département des incendies, etc) devraient être consultées avant l'installation afin de déterminer si un permis est requis.

(1) System 636 is a trademark of IPEX Inc.

PG9MAB

IMPORTANT

The Commonwealth of Massachusetts requires compliance with regulation 248 CMR as follows:

5.08: Modifications to NFPA-54, Chapter 10

2) Revise 10.8.3 by adding the following additional requirements:

a. For all side wall horizontally vented gas fueled equipment installed in every dwelling, building or structure used in whole or in part for residential purposes, including those owned or operated by the Commonwealth and where the side wall exhaust vent termination is less than seven (7) feet above finished grade in the area of the venting, including but not limited to decks and porches, the following requirements shall be satisfied:

1. INSTALLATION OF CARBON MONOXIDE DETECTORS. At the time of installation of the side wall horizontal vented gas fueled equipment, the installing plumber or gasfitter shall observe that a hard wired carbon monoxide detector with an alarm and battery back-up is installed on the floor level where the gas equipment is to be installed. In addition, the installing plumber or gasfitter shall observe that a battery operated or hard wired carbon monoxide detector with an alarm is installed on each additional level of the dwelling, building or structure served by the side wall horizontal vented gas fueled equipment. It shall be the responsibility of the property owner to secure the services of qualified licensed professionals for the installation of hard wired carbon monoxide detectors

   a. In the event that the side wall horizontally vented gas fueled equipment is installed in a crawl space or an attic, the hard wired carbon monoxide detector with alarm and battery back-up may be installed on the next adjacent floor level.

   b. In the event that the requirements of this subdivision can not be met at the time of completion of installation, the owner shall have a period of thirty (30) days to comply with the above requirements; provided, however, that during said thirty (30) day period, a battery operated carbon monoxide detector with an alarm shall be installed.

2. APPROVED CARBON MONOXIDE DETECTORS. Each carbon monoxide detector as required in accordance with the above provisions shall comply with NFPA 720 and be ANSI/UL 2034 listed and IAS certified.

3. SIGNAGE. A metal or plastic identification plate shall be permanently mounted to the exterior of the building at a minimum height of eight (8) feet above grade directly in line with the exhaust vent terminal for the horizontally vented gas fueled heating appliance or equipment. The sign shall read, in print size no less than one-half (1/2) inch in size, ”GAS VENT DIRECTLY BELOW. KEEP CLEAR OF ALL OBSTRUCTIONS”.

4. INSPECTION. The state or local gas inspector of the side wall horizontally vented gas fueled equipment shall not approve the installation unless, upon inspection, the inspector observes carbon monoxide detectors and signage installed in accordance with the provisions of 248 CMR 5.08(2)(a)1 through 4.

5. EXEMPTIONS: The following equipment is exempt from 248 CMR 5.08(2)(a)1 through 4:

   (1.) The equipment listed in Chapter 10 entitled ”Equipment Not Required To Be Vented” in the most current edition of NFPA 54 as adopted by the Board; and

   (2.) Product Approved side wall horizontally vented gas fueled equipment installed in a room or structure separate from the dwelling, building or structure used in whole or in part for residential purposes.

c. MANUFACTURER REQUIREMENTS - GAS EQUIPMENT VENTING SYSTEM PROVIDED. When the manufacturer of Product Approved side wall horizontally vented gas equipment provides a venting system design or venting system components with the equipment, the instructions provided by the manufacturer for installation of the equipment and the venting system shall include:

1. Detailed instructions for the installation of the venting system design or the venting system components; and
2. A complete parts list for the venting system design or venting system.

d. MANUFACTURER REQUIREMENTS - GAS EQUIPMENT VENTING SYSTEM NOT PROVIDED. When the manufacturer of a Product Approved side wall horizontally vented gas fueled equipment does not provide the parts for venting the flue gases, but identifies “special venting systems”, the following requirements shall be satisfied by the manufacturer:

1. The referenced “special venting system” instructions shall be included with the appliance or equipment installation instructions; and
2. The “special venting systems” shall be Product Approved by the Board, and the instructions for that system shall include a parts list and detailed installation instructions.

e. A copy of all installation instructions for all Product Approved side wall horizontally vented gas fueled equipment, all venting instructions, all parts lists for venting instructions, and/or all venting design instructions shall remain with the appliance or equipment at the completion of the installation.

For questions regarding these requirements, please contact the Commonwealth of Massachusetts Board of State Examiners of Plumbers and Gas Fitters, 239 Causeway Street, Boston, MA 02114. 617-727-9952.

TABLE OF CONTENTS

SAFETY CONSIDERATIONS 3
DIMENSIONAL DRAWING 4
Clearances to Combustibles 5
CODES AND STANDARDS 7
ELECTROSTATIC DISCHARGE (ESD) PRECAUTIONS . . . 8
INTRODUCTION 8
APPLICATIONS 9
General 9
Upflow Applications 9
Downflow Applications 11
Horizontal Left (Supply-Air Discharge) Applications 12
Horizontal Right (Supply-Air Discharge) Applications 13
LOCATION 16
General 16
Furnace Location Relative to Cooling Equipment 17
Hazardous Locations 17
Furnace Location and Application 17
AIR FOR COMBUSTION AND VENTILATION 18
INSTALLATION 21
Leveling Legs (If Desired) 21
Installation in Upflow or Downflow Applications 21
Installation in Horizontal Applications 21
Air Ducts 23
General 23
Ductwork Acoustical Treatment 24
Supply Air Connections 24
Return Air Connections 25
Filter Arrangement 25
Bottom Closure Panel 26
Gas Piping 26
Electrical Connections 27
115-v Wiring 28
24-v Wiring 28
Accessories 29
Removal of Existing Furnaces from Common Vent Systems 29
Combustion Air and Vent Pipe Systems 29
Condensate Drain 46
General 46
Application 46
Condensate Drain Protection 46
START-UP, ADJUSTMENT AND SAFETY CHECK 47
General 47
Prime Condensate Trap with Water 47
Purge Gas Lines 47
Sequence of Operation 47
Heating Mode 48
Cooling Mode 48
Continuous Blower Mode 48
Heat Pump Mode 48
Component Test 48
Adjustments 49
Set Gas Input Rate 49
Set Temperature Rise 55
Adjust Blower Off Delay (Heat Mode) 56
Set Thermostat Heat Anticipator 56
Check Safety Controls 56
Check Primary Limit Control 56
Check Pressure Switch 56
CHECKLIST 57

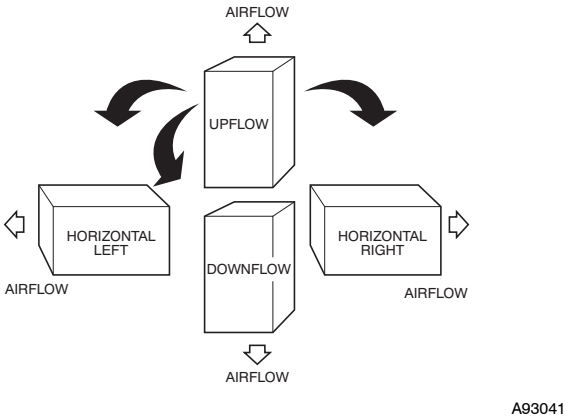

Fig. 1 - Multipoise Orientations

PG9MAB

SAFETY CONSIDERATIONS

Improper installation, adjustment, alteration, service, maintenance, or use can cause explosion, fire, electrical shock, or other conditions which may cause death, personal injury, or property damage. Consult a qualified installer, service agency, or your distributor or branch for information or assistance. The qualified installer or agency must use factory-authorized kits or accessories when modifying this product. Refer to the individual instructions packaged with the kits or accessories when installing.

Follow all safety codes. Wear safety glasses, protective clothing, and work gloves. Have a fire extinguisher available. Read these instructions thoroughly and follow all warnings or cautions include in literature and attached to the unit. Consult local building codes, the current editions of the National Fuel Gas Code (NFGC) NFPA 54/ANSI Z223.1 and the National Electrical Code (NEC) NFPA 70.

In Canada, refer to the current editions of the National Standards of Canada CAN/CSA-B149.1 and .2 Natural Gas and Propane Installation Codes, and Canadian Electrical Code CSA C22.1

Recognize safety information. This is the safety-alert symbol ⚠. When you see this symbol on the unit and in instructions or manuals, be alert to the potential for personal injury.

Understand the signal words **DANGER**, **WARNING**, and **CAUTION**. These words are used with the safety-alert symbol. **DANGER** identifies the most serious hazards which **will** result in severe personal injury or death. **WARNING** signifies hazards which **could** result in personal injury or death. **CAUTION** is used to identify unsafe practices which **may** result in minor personal injury or product and property damage. **NOTE** is used to highlight suggestions which **will** result in enhanced installation, reliability, or operation.

⚠ CAUTION

UNIT RELIABILITY HAZARD

Improper installation or misapplication of furnace may require excessive servicing or cause premature component failure.

Application of this furnace should be indoors with special attention given to vent sizing and material, gas input rate, air temperature rise, unit leveling, and unit sizing.

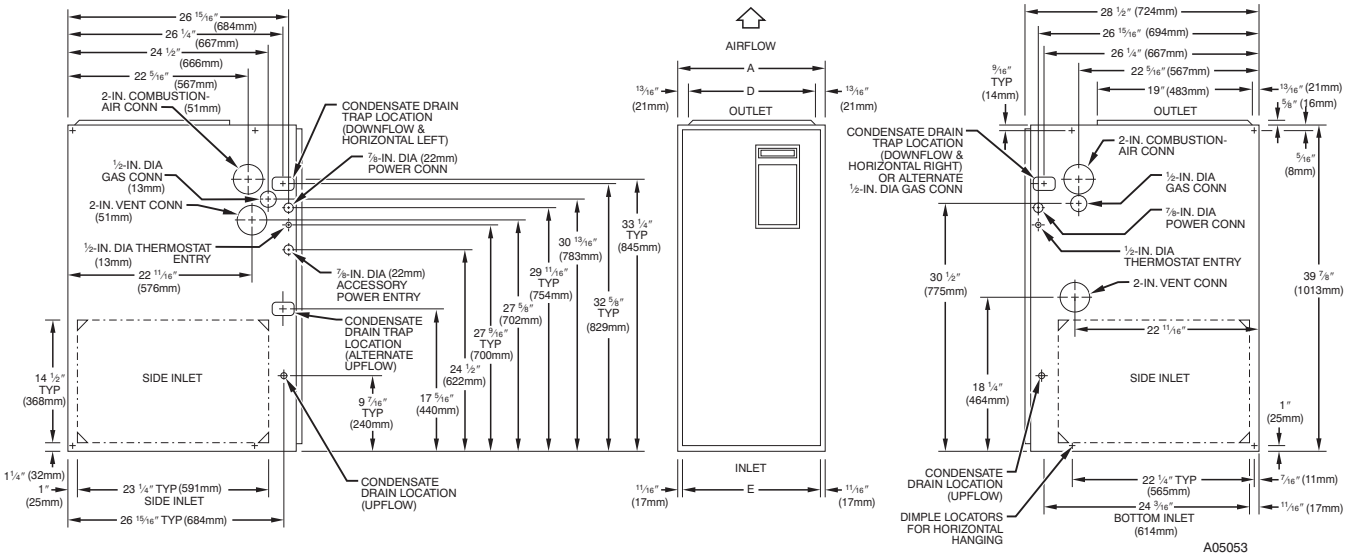

NOTES: 1. Minimum return-air openings at furnace, based on metal duct. If flex duct is used, see flex duct manufacturer's recommendation for equivalent diameters.

2. Minimum return-air opening at furnace:
   a. For 800 CFM 16-in . (406mm) round or 14 1/2 (368mm) x 12-in. (305mm) rectangle.
   b. For 1200 CFM 20-in . (508mm) round or 14 1/2 (368mm) x 19 1/2-in. (495mm) rectangle.
   c. For 1600 CFM 22-in .(559mm) round or 14 1/2 (368mm) x 23 1/4-in.(591mm)rectangle.
   d. For airflow requirements above 1800 CFM, see Air Delivery table in Product Data literature for specific use of single side inlets. The use of both side inlets, a combination of 1 side and the bottom, or the bottom only will ensure adequate return air openings for airflow requirements above 1800 CFM at 0.5" W.C. ESP.

Dimensions – IN. (mm)

UNIT SIZE	A	D	E
040–08 / 024040	17-1/2 (445)	15-7/8 (403)	16 (406)
040–12 / 036040	17-1/2 (445)	15-7/8 (403)	16 (406)
060–08 / 024060	17-1/2 (445)	15-7/8 (403)	16 (406)
060–12 / 036060	17-1/2 (445)	15-7/8 (403)	16 (406)
060–16 / 048060	17-1/2 (445)	15-7/8 (403)	16 (406)
080–12 / 036080	17-1/2 (445)	15-7/8 (403)	16 (406)
080–16 / 048080	17-1/2 (445)	15-7/8 (403)	16 (406)
080–20 / 060080	21 (533)	19-3/8 (492)	19-1/2 (495)
100–16 / 048100	21 (533)	19-3/8 (492)	19-1/2 (495)
100–20 / 060100	21 (533)	19-3/8 (492)	19-1/2 (495)
120–20 / 060120	24-1/2 (622)	19-3/8 (492)	23 (584)
140–20 / 060140	24-1/2 (622)	22-7/8 (581)	23 (584)

Fig. 2 - Dimensional Drawing

INSTALLATION

- This forced air furnace is equipped for use with natural gas at altitudes 0 - 10,000 ft (0 - 3,050m), except 140 size furnaces are only approved for altitudes 0 - 7,000 ft. (0 - 2,135m).
- An accessory kit, supplied by the manufacturer, shall be used to convert to propane gas use or may be required for some natural gas applications.
- This furnace is for indoor installation in a building constructed on site. This furnace may be installed in a manufactured (mobile) home when stated on rating plate and using factory authorized kit..
- This furnace may be installed on combustible flooring in alcove or closet at **Minimum Inches Clearance To Combustible Construction** as described below.
- This furnace requires a special venting system. Refer to the installation instructions for parts list and method of installation. In the US this furnace is for use with schedule-40 PVC, PVC-DWV, CPVC, or ABS-DWV pipe, and must not be vented in common with other gas-fired appliances. In Canada, refer to installation instructions for vent materials. Construction through which vent/air intake pipes may be installed is maximum 24 inches (610 mm), minimum 3/4 inches (19 mm) thickness (including roofing materials).
- Cette fournaise à air pulsé est équipée pour utilisation avec gaz naturel et altitudes comprises entre 0 - 3,050m (0 - 10,000 pi),excepté queles fournaises de 140 taille sont pour altitudes comprises entre 0 - 2,135m (0 - 7,000pi).
- Utiliser une trousse de conversion, fournie par le fabricant, pour passer au gaz propane ou pour certaines installations au gaz naturel.
- Cette fournaise à air pulsé est pour installation à l´intérieur dans un bâtiment construit sur place. Cette fournaise à air pulse peut être installée dans une maison préfabriquée (maison mobile) si prescrit par la plaque signalétique et si'l on utilise une trousse specifiée par le fabricant.
- Cette fournaise peut être installée sur un plancher combustible dans un enfoncement ou un placard en observant les **Dégagement Minimum En Pouces Avec Éléments De Construction Combustibles.**
- Cette fournaise nécessite un système d´évacuation spécial. La méthode d´installation et la liste des pièces nécessaires figurent dans les instructions d´installation. Aux Etats-Unis, cette fournaise doit s´utiliser avec la tuyauterie des nomenclatures 40 PVC, PVC-DWV, CPVC, ou ABS-DWV et elle ne peut pas être ventilée conjointment avec d´autres appareils à gaz. Au Canada, referer aux instructions d'installation pour lex matériaux à ventiler. Épaisseur de la construction au travers de laquelle il est possible de faire passer les tuyaux d'aération (admission/évacuation): 24 po (610 mm) maximum, 3/4 po (19mm) minimum (y compris la toiture).

For upflow and downflow applications, furnace must be installed level, or pitched within 1/2" (12.7mm) of level. For a horizontal application, the furnace must be pitched minimum 1/4" (6.35mm) to maximum of 1/2" (12.7mm) forward for proper drainage. See Installation Manual for IMPORTANT unit support details on horizontal applications.

Pour des applications de flux ascendant et descendant, la fournaise doit être installée de niveau ou inclinée à pas plus de 1/2" (12.7mm) du niveau. Pour une application horizontale, la fournaise doit être inclinée entre minimum 1/4" (6.35mm) et maximum 1/2" (12.7mm) du niveau pour le drainage approprié. En cas d´installation en position horizontale, consulter les renseignements IMPORTANTS sur le support dans le manuel d´installation.

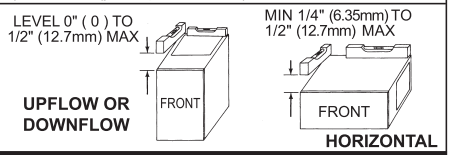

MINIMUM INCHES CLEARANCE TO COMBUSTIBLE CONSTRUCTION

ALL POSITIONS:

* Minimum front clearance for service 24 inches (610mm).

† † 140 size furnaces require 1 inch back clearance to combustible materials.

DOWNFLOW POSITIONS:

† For installation on combustible floors only when installed on special base No. KGASB0201ALL or NAHA01101SB, Coil Assembly, Part No. CAR, CAP, CNPV, CNRV or Coil Casing, Part No. KCAKC, or WENC or WTNC.

HORIZONTAL POSITIONS:

Line contact is permissible only between lines formed by intersections of top and two sides of furnace jacket, and building joists, studs, or framing.

§ Clearance shown is for air inlet and air outlet ends.

Ø 120 and 140 size furnaces require 1 inch bottom clearance to combustible materials.

DÉGAGEMENT MINIMUM EN POUCES AVEC ÉLÉMENTS DE CONSTRUCTION COMBUSTIBLES

POUR TOUS LES POSITIONS:

* Dégagement avant minimum de 24 po (610mm) pour l´entretien.

† † Pour les fournaises de 140 taille, 1 po (25mm) dégagement des matériaux combustibles est requis au-arriere.

POUR LA POSITION COURANT DESCENDANT:

† Pour l´installation sur le plancher combustible seulement quand on utilise la base spéciale, pièce nº KGASB0201ALL ou NAHA01101SB, l´ensemble serpentin, pièce nº CAR, CAP, CNPV, CNRV, ou le carter de serpentin, pièce nº KCAKC ou WENC ou WTNC.

POUR LA POSITION HORIZONTALE:

Le contact n´est permis qúentre les lignes formées par les intersections du dessus et des deuxcôtés de la chemise de la fournaise, et des solives, des montants ou de la charpente du bâtiment.

§ La distance indiquée concerne l´extrémité du tuyau d´arrivée d´air et l´extrémité du tuyau de sortie d´air.

Ø Pour les fournaises de 120 et 140 taille, 1 po (25mm) dégagement des matériaux combustibles est requis au-dessous.

335122-201 REV. B LIT TOP

This furnace is approved for UPFLOW, DOWNFLOW and HORIZONTAL installations.

Cette fournaise est approuvée pour l´installation HORIZONTALE et la circulation d´air VERS LE HAUT et VERS LE BAS.

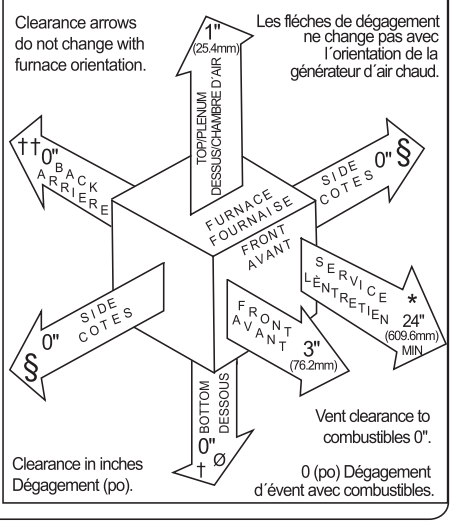

A08435

Fig. 3 - Clearances to Combustibles

⚠ WARNING

FIRE, EXPLOSION, ELECTRICAL SHOCK AND CARBON MONOXIDE POISONING HAZARD

Failure to follow this warning could result in electrical shock, fire, personal injury, or death.

Improper installation, adjustment, alteration, service, maintenance, or use can cause carbon monoxide poisoning, explosion, fire, electrical shock, or other conditions which may cause personal injury or property damage. Consult a qualified installer, service agency, local gas supplier, or your distributor or branch for information or assistance. The qualified installer or agency must use only factory-authorized and listed kits or accessories when modifying this product.

⚠ CAUTION

CUT HAZARD

Failure to follow this caution may result in personal injury.

Sheet metal parts may have sharp edges or burrs. Use care and wear appropriate protective clothing and gloves when handling parts.

The PG9MAB Multipoise Condensing Gas-Fired Furnaces are CSA (formerly AGA and CGA) design-certified for natural and propane gases (see furnace rating plate) and for installation in alcoves, attics, basements, closets, utility rooms, crawlspaces, and garages. The furnace is factory-shipped for use with natural gas. A CSA listed gas conversion kit is required to convert furnace for use with propane gas.

See Fig. 3 for required clearances to combustibles.

Maintain a 1-in. (25 mm) clearance from combustible materials to supply air ductwork for a distance of 36 in. (914 mm) horizontally from the furnace. See NFPA 90B or local code for further requirements.

These furnaces SHALL NOT be installed directly on carpeting, tile, or any other combustible material other than wood flooring. In downflow installations, factory accessory floor base MUST be used when installed on combustible materials and wood flooring. Special base is not required when this furnace is installed on manufacturer's Coil Assembly Part No. CNPV, CAPV, CAP or CAR or CK5, or when Coil Box Part No. KCAKC is used.

The PG9MAB 040 through 120 size units are CSA (formerly AGA and CGA) design-certified for use in manufactured (mobile) homes when installed as a 2-pipe (direct vent) furnace and a factory accessory conversion kit is used. The 140 size unit is NOT design-certified for use in manufactured (mobile) homes. These furnaces are suitable for installation in a structure built on site or a manufactured building completed at final site. The design of this furnace line is NOT CSA design-certified for installation in recreation vehicles or outdoors.

This furnace is designed for continuous return-air minimum temperature of 60°F (15°C)db or intermittent operation down to 55°F (13°C)db such as when used with a night setback thermostat. Return-air temperature must not exceed 80°F (27°C) db. Failure to follow these return-air limits may affect reliability of heat exchangers, motors, and controls. (See Fig. 4.)

These furnaces are shipped with the drain and pressure tubes connected for UPFLOW applications. Minor modifications are required when used in DOWNFLOW, HORIZONTAL RIGHT, or HORIZONTAL LEFT (supply-air discharge direction) applications as shown in Fig. 1. See details in Applications section.

Install this furnace only in a location and position as specified in LOCATION and INSTALLATION sections of these instructions.

Always provide adequate combustion and ventilation air as specified in section Combustion Air and Vent Pipe Systems of these instructions to the furnace.

Combustion products must be discharged outdoors. Connect this furnace to an approved vent system only, as specified in the Combustion Air and Vent piping sections of these instructions.

Never test for gas leaks with an open flame. Use a commercially available soap solution made specifically for detection of leaks to check all connections as specified in the GAS PIPING section of these instructions.

Always install the furnace to operate within the furnace's intended rise range with a duct system which has an external static pressure within the allowable range as specified in the SET TEMPERATURE RISE section of these instructions and furnace rating plate.

When a furnace is installed so that supply ducts carry air circulated by the furnace to areas outside the space containing the furnace, the return air shall also be handled by ducts sealed to the furnace casing and terminating outside the space containing the furnace.

A gas-fired furnace for installation in a residential garage must be installed as specified in the Hazardous Locations section of these instructions.

The furnace may be used for construction heat provided that the furnace installation and operation complies with the first CAUTION in the LOCATION section of these instructions.

This gas furnace may be used for construction heat provided that:

- The furnace is permanently installed with all electrical wiring, piping, air filters, venting and ducting installed according to these installation instructions. A return air duct is provided, sealed to the furnace casing, and terminated outside the space containing the furnace. This prevents a negative pressure condition as created by the circulating air blower, causing a flame rollout and/or drawing combustion products into the structure.
- The furnace is controlled by a thermostat. It may not be "hot wired" to provide heat continuously to the structure without thermostatic control.
- Clean outside air is provided for combustion. This is to minimize the corrosive effects of adhesives, sealers and other construction materials. It also prevents the entrainment of drywall dust into combustion air, which can cause fouling and plugging of furnace components.
- The temperature of the return air to the furnace is maintained between 55°F (13°C) and 80°F (27°C), with no evening setback or shutdown. The use of the furnace while the structure is under construction is deemed to be intermittent operation per our installation instructions.
- The air temperature rise is within the rated rise range on the furnace rating plate, and the firing rate has been set to the nameplate value.
- The filters used to clean the circulating air during the construction process must be either changed or thoroughly cleaned prior to occupancy.
- The furnace, ductwork and filters are cleaned as necessary to remove drywall dust and construction debris from all HVAC system components after construction is completed.
- After construction is complete, verify furnace operating conditions including ignition, input rate, temperature rise and venting, according to the manufacturer's instructions.

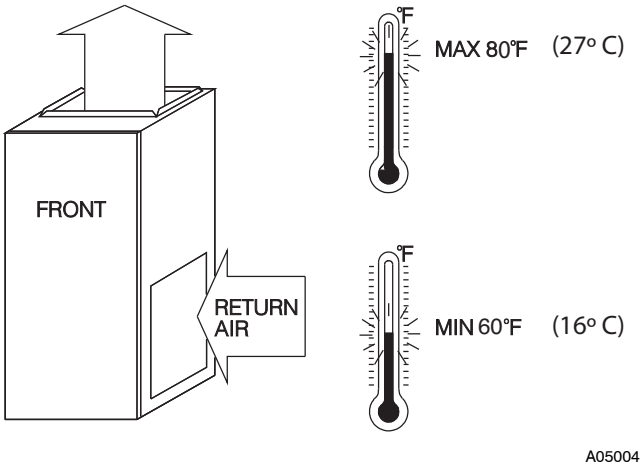

Fig. 4 - Return-Air Temperature

These furnaces are shipped with the following materials to assist in proper furnace installation. These materials are shipped in the main blower compartment.

Installer Packet Includes:	
Installation, Startup, and Operating Instructions	
Service and Maintenance Instructions	
User's Information Manual	
Warranty Certificate	
Loose Parts Bag Includes:	Quantity
Pressure tube extension	1
Collector Box or condensate trap extension tube	1
Inducer housing drain tube	1
1/2-in CPVC street elbow	2
Drain tube coupling	1
Drain tube coupling grommet	1
Vent and combustion-air pipe support	2
Condensate trap hole filler plug	3
Vent and combustion-air intake hole filler plug	2
Combustion-air pipe perforated disk assembly	1
Vent Pipe Extension	1*

* ONLY supplied with some furnaces.

The furnace shall be installed so that the electrical components are protected from water.

For accessory installation details, refer to accessory installation instructions.

CODES AND STANDARDS

Follow all national and local codes and standards in addition to these instructions. The installation must comply with regulations of the serving gas supplier, local building, heating, plumbing, and other codes. In absence of local codes, the installation must comply with the national codes listed below and all authorities having jurisdiction.

In the United States and Canada, follow all codes and standards for the following:

Step 1 - Safety

- US: National Fuel Gas Code (NFGC) NFPA 54-2006/ANSI Z223.1-2006 and the Installation Standards, Warm Air Heating and Air Conditioning Systems ANSI/NFPA 90B
- CANADA: National Standard of Canada, Natural Gas and Propane Installation Code (NSCNGPIC) CSA B149.1-05.

Step 2 - General Installation

- US: NFGC and the NFPA 90B. For copies, contact the National Fire Protection Association Inc., Batterymarch Park, Quincy, MA 02269; or for only the NFGC contact the American Gas Association, 400 N. Capitol, N.W., Washington DC 20001.
- A manufactured (Mobile) home installation must conform with the *Manufactured Home Construction and Safety Standard, Title 24 CFR, Part 3280*, or when this standard is not applicable, the Standard for *Manufactured Home Installation (Manufactured Home Sites, Communities, and Set-Ups), ANSI/NCS A225.1,* and/or *CAN/CSA-Z240, MH Series Mobile Homes*
- CANADA: NSCNGPIC. For a copy, contact Standard Sales, CSA International, 178 Rexdale Boulevard, Etobicoke (Toronto), Ontario, M9W 1R3, Canada.

Step 3 - Combustion and Ventilation Air

- US: Section 9.3 of the NFPA54/ANSI Z223.1-2006, Air for Combustion and Ventilation
- CANADA: Part 8 of the CAN/CSA-B149.1-05, Venting Systems and Air Supply for Appliances

Step 4 - Duct Systems

- US and CANADA: Air Conditioning Contractors Association (ACCA) Manual D, Sheet Metal and Air Conditioning Contractors National Association (SMACNA), or American Society of Heating, Refrigeration, and Air Conditioning Engineers (ASHRAE) 2001 Fundamentals Handbook Chapter 34.

Step 5 - Acoustical Lining and Fibrous Glass Duct

- US and CANADA: current edition of SMACNA, NFPA 90B as tested by UL Standard 181 for Class I Rigid Air Ducts

Step 6 - Gas Piping and Gas Pipe Pressure Testing

- US: NFPA 54/ANSI Z223.1-2006; chapters 5, 6, 7, and 8 and national plumbing codes
- CANADA: NSCNGPIC Parts 4, 5, and 6 A, B, E, and H.

In the state of Massachusetts:

- This product must be installed by a licensed plumber or gas fitter.
- When flexible connectors are used, the maximum length shall not exceed 36-in. (914 mm).
- When lever types gas shutoffs are used they shall not exceed 36-in. (914 mm).
- The use of copper tubing for gas piping is not approved by the state of Massachusetts.

Step 7 - Electrical Connections

- US: National Electrical Code (NEC) ANSI/NFPA 70-2008
- CANADA: Canadian Electrical Code CSA C22.1

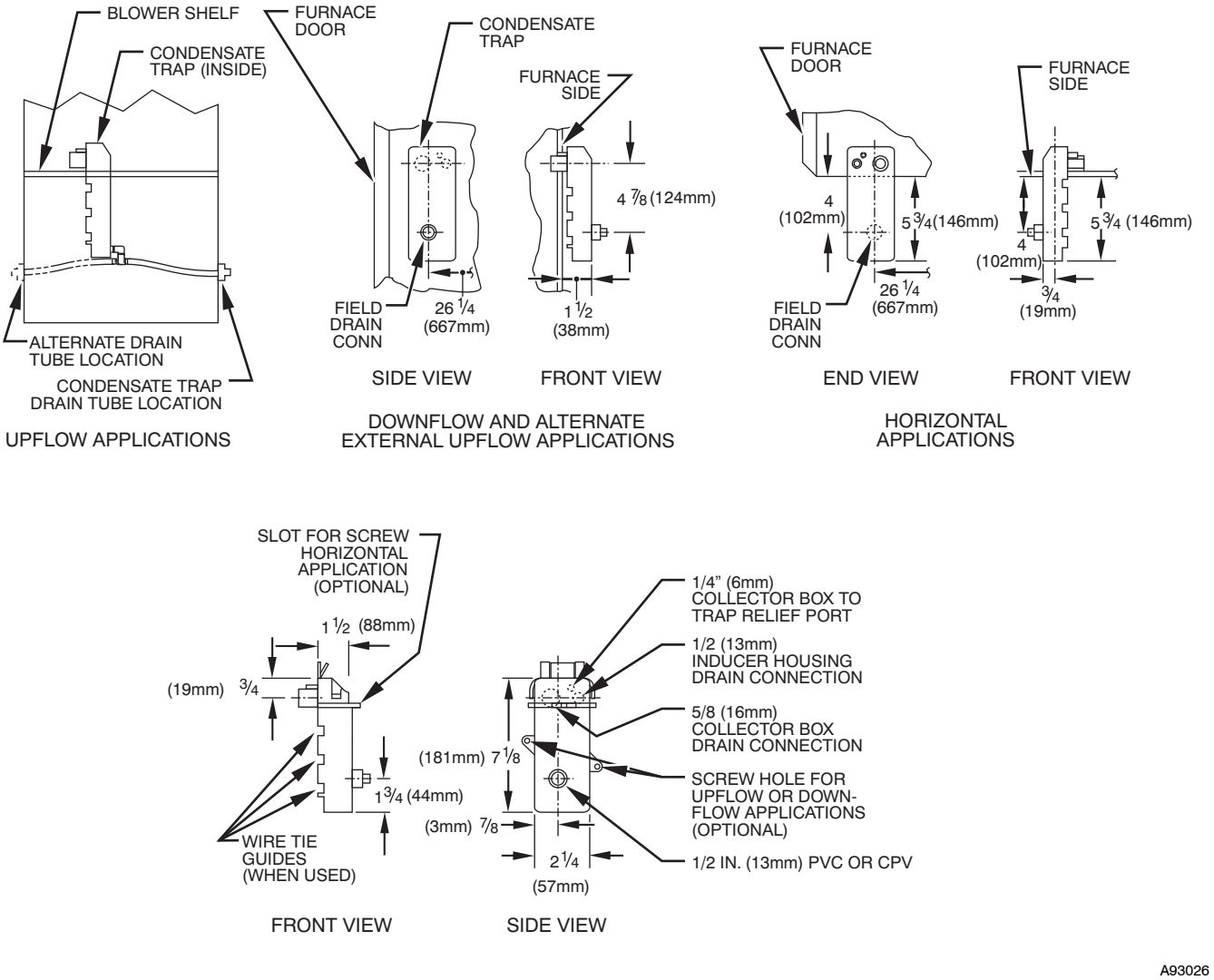

Fig. 5 - Condensate Trap

ELECTROSTATIC DISCHARGE (ESD) PRECAUTIONS

⚠ CAUTION

UNIT DAMAGE HAZARD

Failure to follow this caution may damage furnace components.

Electrostatic discharge can affect electronic components. Take precautions during furnace installation and servicing to protect the furnace electronic control. Precautions will prevent electrostatic discharges from personnel and hand tools which are held during the procedure. These precautions will help to avoid exposing the control to electrostatic discharge by putting the furnace, the control, and the person at the same electrostatic potential.

3. Disconnect all power to the furnace. Multiple disconnects may be required. DO NOT TOUCH THE CONTROL OR **ANY** WIRE CONNECTED TO THE CONTROL PRIOR TO DISCHARGING YOUR BODY'S ELECTROSTATIC CHARGE TO GROUND.
4. Firmly touch a clean, unpainted, metal surface of the furnace chassis which is close to the control. Tools held in a person's hand during grounding will be satisfactorily discharged.
5. After touching the chassis, you may proceed to service the control or connecting wires as long as you do nothing that recharges your body with static electricity (for example; DO NOT move or shuffle your feet, DO NOT touch ungrounded objects, etc.).
6. If you touch ungrounded objects (recharge your body with static electricity), firmly touch furnace again before touching control or wires.
7. Use this procedure for installed and uninstalled (ungrounded) furnaces.
8. Before removing a new control from its container, discharge your body's electrostatic charge to ground to protect the control from damage. If the control is to be installed in a furnace, follow items 1 through 5 before bringing the control or yourself into contact with the furnace. Put all used AND new controls into containers before touching ungrounded objects.
9. An ESD service kit (available from commercial sources) may also be used to prevent ESD damage.

INTRODUCTION

The model PG9MAB 4-way multipoise, Gas-Fired, Category IV, condensing furnace is available in model sizes ranging from input capacity of 40,000 to 138,000 Btuh as a direct vent (2-pipe) application, and in model sizes ranging from input capacity of 40,000 to 120,000 Btuh as a non-direct vent (1-pipe) application.

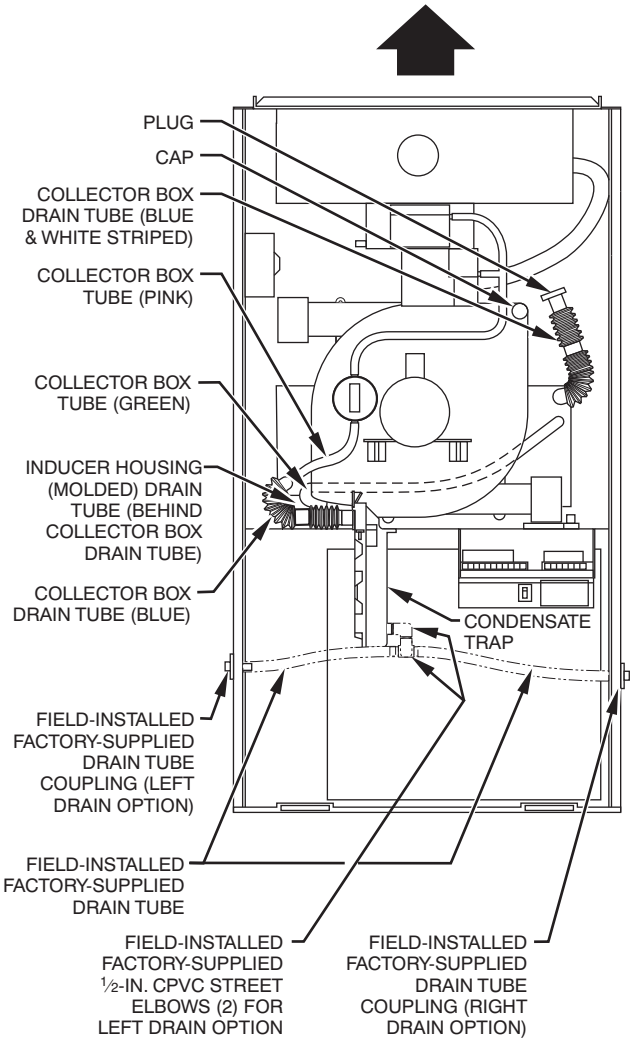

Fig. 6 - Factory Shipped Upflow Tube Configuration (Shown With Blower Access Panel Removed)

APPLICATIONS

⚠ CAUTION

MINOR PROPERTY DAMAGE

Failure to follow this caution may result in minor property damage.

Local codes may require a drain pan under entire furnace and condensate trap when a condensing furnace is used in an attic application or over a finished ceiling.

Step 1 - General

Some assembly and modifications are required for furnaces installed in any of the 4 applications shown in Fig. 1. All drain and pressure tubes are connected as shown in Fig. 6. See appropriate application instructions for these procedures.

Step 2 - Upflow Applications

An upflow furnace application is where furnace blower is located below combustion and controls section of furnace, and conditioned air is discharged upwards.

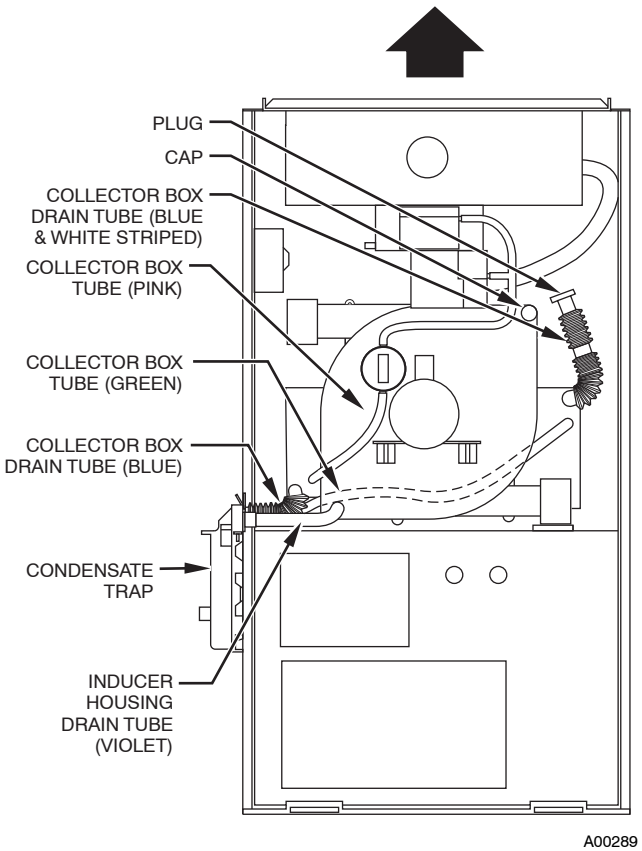

Fig. 7 - Alternate Upflow Tube Configuration and Trap Location

CONDENSATE TRAP LOCATION (FACTORY-SHIPPED ORIENTATION)

The condensate trap is factory installed in the blower shelf and factory connected for UPFLOW applications. A factory-supplied tube is used to extend the condensate trap drain connection to the desired furnace side for field drain attachment. See Condensate Trap Tubing (Factory-Shipped Orientation) section for drain tube extension details. (See Fig. 5.)

CONDENSATE TRAP TUBING (FACTORY-SHIPPED ORIENTATION)

NOTE: See Fig. 6 or tube routing label on main furnace door to confirm location of these tubes.

1. Collector Box Drain, Inducer Housing Drain, Relief Port, and Pressure Switch Tubes
   These tubes should be factory attached to condensate trap and pressure switch ready for use in UPFLOW applications. These tubes can be identified by their connection location and also by a color label on each tube. These tubes are identified as follows: collector box drain tube (blue label), inducer housing drain tube (violet label or molded), relief port tube (green label), and pressure switch tube (pink label).
2. Condensate Trap Drain Tube
   The condensate trap drain connection must be extended for field attachment by doing the following:
   f. Determine location of field drain connection. (See Fig. 2 or 6.)

NOTE: If internal filter is used, drain tube should be located to opposite side of casing from return duct attachment to assist in filter removal.

   g. Remove and discard casing drain hole plug button from desired side.

PG9MAB

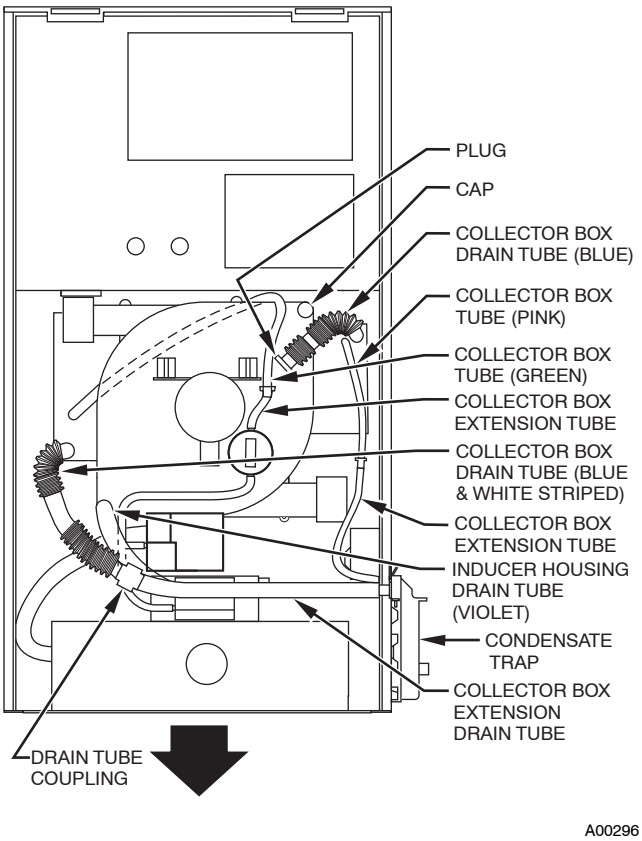

Fig. 8 - Downflow Tube Configuration (Right-Hand Trap Installation)

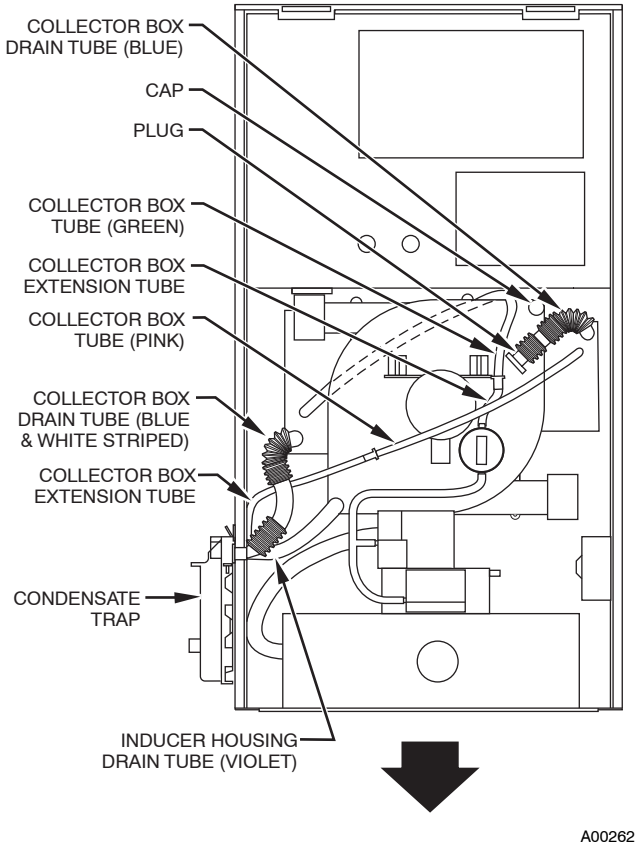

Fig. 9 - Downflow Tube Configuration (Left-Hand Trap Installation)

h. Install drain tube coupling grommet (factory-supplied in loose parts bag) in selected casing hole.

i. Slide drain tube coupling (factory-supplied in loose parts bag) through grommet ensuring long end of coupling faces blower.

j. Cement 2 factory-supplied 1/2-in. (13 mm) street CPVC elbows to the rigid drain tube connection on the condensate trap. (See Fig. 6.) These elbows must be cemented together and cemented to condensate trap drain connection.

NOTE: Failure to use CPVC elbows may allow drain to kink and prevent draining.

k. Connect larger diameter drain tube and clamp (factory-supplied in loose parts bag) to condensate trap and clamp securely.

l. Route tube to coupling and cut to appropriate length.

m. Attach tube to coupling and clamp securely.

CONDENSATE TRAP LOCATION (ALTERNATE UPFLOW ORIENTATION)

An alternate location for the condensate trap is the left-hand side of casing. (See Fig. 2 and 7.)

NOTE: If the alternate left-hand side of casing location is used, the factory-connected drain and relief port tubes must be disconnected and modified for attachment. See Condensate Trap Tubing (Alternate Upflow Orientation) section for tubing attachment.

To relocate condensate trap to the left-hand side, perform the following:

1. Remove 3 tubes connected to condensate trap.
2. Remove trap from blower shelf by gently pushing tabs inward and rotating trap.
3. Install casing hole filler cap (factory-supplied in loose parts bag) into blower shelf hole where trap was removed.

⚠ WARNING

CARBON MONOXIDE POISONING HAZARD

Failure to follow this warning could result in personal injury or death.

Casing hole filler cap must be installed in blower shelf hole when condensate trap is relocated to prevent combustion products being drawn in from appliances in the equipment room.

4. Install condensate trap into left-hand side casing hole by inserting tube connection stubs through casing hole and rotating until tabs snap into locking position.
5. Fill unused condensate trap casing holes with plastic filler caps (factory-supplied in loose parts bag).

CONDENSATE TRAP TUBING (ALTERNATE UPFLOW ORIENTATION)

NOTE: See Fig. 7 or tube routing label on main furnace door to confirm location of these tubes.

1. Collector Box Drain Tube
   Connect collector box drain tube (blue label) to condensate trap.

NOTE: On 17-1/2-in. (445 mm) wide furnaces ONLY, cut tube between corrugated sections to prevent kinks from occurring.

2. Inducer Housing Drain Tube
   a. Remove and discard LOWER (molded) inducer housing drain tube which was previously connected to condensate trap.
   b. Use inducer housing drain extension tube (violet label and factory-supplied in loose parts bag) to connect LOWER inducer housing drain connection to the condensate trap.
   c. Determine appropriate length, cut, and connect tube.
   d. Clamp tube to prevent any condensate leakage.
3. Relief Port Tube
   e. Connect relief port tube (green label) to condensate trap.
   f. Extend this tube (if required) by splicing to small diameter tube (factory-supplied in loose parts bag).
   g. Determine appropriate length, cut, and connect tube.

CONDENSATE TRAP FIELD DRAIN ATTACHMENT

Refer to Condensate Drain section for recommendations and procedures.

PRESSURE SWITCH TUBING

The LOWER collector box pressure tube (pink label) is factory connected to the pressure switch and should not require any modification.

NOTE: See Fig. 6 or 7 or tube routing label on main furnace door to check for proper connections.

UPPER COLLECTOR BOX AND INDUCER HOUSING (UNUSED) DRAIN CONNECTIONS

Upper Collector Box Drain Connection

Attached to the UPPER collector box drain connection is a factory-installed corrugated, plugged tube (blue and white striped label). This tube is plugged to prevent condensate leakage in this application. Ensure this tube is plugged.

NOTE: See Fig. 6 or 7 or tube routing label on main furnace door to check for proper connections.

Upper Inducer Housing Drain Connection

Attached to the UPPER (unused) inducer housing drain connection is a cap and clamp. This cap is used to prevent condensate leakage in this application. Ensure this connection is capped.

NOTE: See Fig. 6 or 7 or tube routing label on main furnace door to check for proper connections.

CONDENSATE TRAP FREEZE PROTECTION

Refer to Condensate Drain Protection section for recommendations and procedures.

Step 3 - Downflow Applications

A downflow furnace application is where furnace blower is located above combustion and controls section of furnace, and conditioned air is discharged downwards.

CONDENSATE TRAP LOCATION

The condensate trap must be removed from the factory-installed blower shelf location and relocated in selected application location as shown in Fig. 2, 8, or 9.

To relocate condensate trap from the blower shelf to desired location, perform the following:

1. Remove 3 tubes connected to condensate trap.
2. Remove trap from blower shelf by gently pushing tabs inward and rotating trap.
3. Install casing hole filler cap (factory-supplied in loose parts bag) into blower shelf hole where trap was removed.

⚠ WARNING

CARBON MONOXIDE POISONING HAZARD

Failure to follow this warning could result in personal injury or death.

Casing hole filler cap must be installed in blower shelf hole when condensate trap is relocated to prevent combustion products being drawn in from appliances in the equipment room.

4. Install condensate trap into desired casing hole by inserting tube connection stubs through casing hole and rotating until tabs snap into locking position.
5. Fill unused condensate trap casing holes with plastic filler caps (factory-supplied in loose parts bag).

CONDENSATE TRAP TUBING

NOTE: See Fig. 8 or 9 or tube routing label on main furnace door to check for proper connections.

1. Collector Box Drain Tube
   a. Remove factory-installed plug from LOWER collector box drain tube (blue and white striped label).
   b. Install removed clamp and plug into UPPER collector box drain tube (blue label) which was connected to condensate trap.
   c. Connect LOWER collector box drain connection to condensate trap.
      (3.) Condensate Trap Located on Left Side of Casing
         a. Connect LOWER collector box drain tube (blue and white striped label) to condensate trap. Tube does not need to be cut.
         b. Clamp tube to prevent any condensate leakage.
      (4.) Condensate Trap Located on Right Side of Casing
         a. Install drain tube coupling (factory-supplied in loose parts bag) into collector box drain tube (blue and white striped label) which was previously plugged.
         b. Connect larger diameter drain tube (factory-supplied in loose parts bag) to drain tube coupling, extending collector box drain tube for connection to condensate trap.
         c. Route extended collector box drain tube directly from collector box drain to condensate trap as shown in Fig. 9.
         d. Determine appropriate length and cut.
         e. Connect to condensate trap.
         f. Clamp tube to prevent any condensate leakage.
2. Inducer Housing Drain Tube
   a. Remove factory-installed cap and clamp from LOWER inducer housing drain connection.
   b. Remove and discard UPPER (molded) inducer housing drain tube which was previously connected to condensate trap.
   c. Install cap and clamp on UPPER inducer housing drain connection where molded drain tube was removed.
   d. Use inducer housing drain tube (violet label and factory-supplied in loose parts bag) to connect LOWER inducer housing drain connection to the condensate trap.

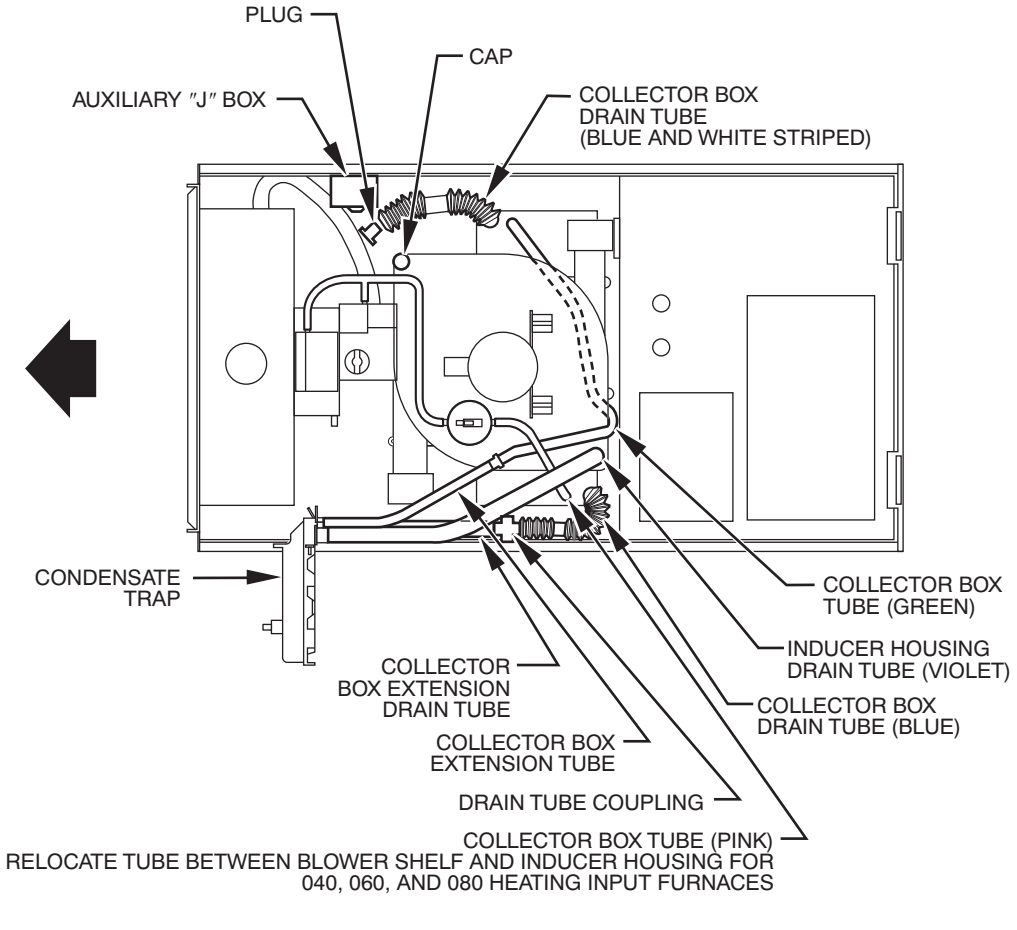

Fig. 10 - Horizontal Left Tube Configuration

e. Connect inducer housing drain connection to condensate trap.
   (1.) Condensate Trap Located on Left Side of Casing
      a. Determine appropriate length and cut.
      b. Connect tube to condensate trap.
      c. Clamp tube to prevent any condensate leakage.
   (2.) Condensate Trap Located on Right Side of Casing
      a. Route inducer housing drain tube (violet label) directly from inducer housing to condensate trap as shown in Fig. 9.
      b. Determine appropriate length and cut.
      c. Connect tube to condensate trap.
      d. Clamp tube to prevent any condensate leakage.

3. Relief Port Tube
   Refer to Pressure Switch Tubing section for connection procedure.

CONDENSATE TRAP FIELD DRAIN ATTACHMENT

Refer to Condensate Drain section for recommendations and procedures.

PRESSURE SWITCH TUBING

One collector box pressure tube (pink label) is factory connected to the pressure switch for use when furnace is installed in UPFLOW applications. This tube MUST be disconnected and used for the condensate trap relief port tube. The other collector box pressure tube (green label) which was factory connected to the condensate trap relief port connection MUST be connected to the pressure switch in DOWNFLOW or HORIZONTAL RIGHT applications.

NOTE: See Fig. 8 or 9 or tube routing label on main furnace door to check for proper connections.

Relocate tubes as described below.

1. Disconnect collector box pressure tube (pink label) attached to pressure switch.
2. Extend collector box pressure tube (green label) which was previously connected to condensate trap relief port connection by splicing to small diameter tube (factory-supplied in loose parts bag).
3. Connect collector box pressure tube (green label) to pressure switch connection labeled COLLECTOR BOX.
4. Extend collector box pressure tube (pink label) which was previously connected to pressure switch by splicing to remaining small diameter tube (factory-supplied in loose parts bag).
5. Route this extended tube (pink label) to condensate trap relief port connection.
6. Determine appropriate length, cut, and connect tube.
7. Clamp tube to relief port connection.

CONDENSATE TRAP FREEZE PROTECTION

Refer to Condensate Drain Protection section for recommendations and procedures.

Step 4 - Horizontal Left (Supply-Air Discharge) Applications

A horizontal left furnace application is where furnace blower is located to the right of combustion and controls section of furnace, and conditioned air is discharged to the left.

CONDENSATE TRAP LOCATION

The condensate trap must be removed from the factory-installed blower shelf location and relocated in selected application location as shown in Fig. 2 or 10.

To relocate condensate trap from the blower shelf to desired location, perform the following:

1. Remove 3 tubes connected to condensate trap.
2. Remove trap from blower shelf by gently pushing tabs inward and rotating trap.
3. Install casing hole filler cap (factory-supplied in loose parts bag) into blower shelf hole where trap was removed.

⚠ WARNING

CARBON MONOXIDE POISONING HAZARD

Failure to follow this warning could result in personal injury or death.

Casing hole filler cap must be installed in blower shelf hole when condensate trap is relocated to prevent combustion products being drawn in from appliances in the equipment room.

4. Install condensate trap into desired casing hole by inserting tube connection stubs through casing hole and rotating until tabs snap into locking position.
5. Fill unused condensate trap casing holes with plastic filler caps (factory-supplied in loose parts bag).

CONDENSATE TRAP TUBING

NOTE: See Fig. 10 or tube routing label on main furnace door to check for proper connections.

1. Collector Box Drain Tube
   a. Install drain tube coupling (factory-supplied in loose parts bag) into collector box drain tube (blue label) which was previously connected to condensate trap.
   b. Connect large diameter drain tube and clamp (factory-supplied in loose parts bag) to drain tube coupling, extending collector box drain tube.
   c. Route extended tube (blue label) to condensate trap and cut to appropriate length.
   d. Clamp tube to prevent any condensate leakage.
2. Inducer Housing Drain Tube
   a. Remove and discard LOWER (molded) inducer housing drain tube which was previously connected to condensate trap.
   b. Use inducer housing drain extension tube (violet label and factory-supplied in loose parts bag) to connect LOWER inducer housing drain connection to the condensate trap.
   c. Determine appropriate length, cut, and connect tube.
   d. Clamp tube to prevent any condensate leakage.
3. Relief Port Tube
   a. Extend collector box tube (green label) which was previously connected to the condensate trap by splicing to small diameter tube (factory-supplied in loose parts bag).
   b. Route extended collector box pressure tube to relief port connection on the condensate trap.
   c. Determine appropriate length, cut, and connect tube.
   d. Clamp tube to prevent any condensate leakage.

CONDENSATE TRAP FIELD DRAIN ATTACHMENTS

Refer to Condensate Drain section for recommendations and procedures.

PRESSURE SWITCH TUBING

The LOWER collector box pressure tube (pink label) is factory connected to the pressure switch for use when furnace is installed in UPFLOW applications. This tube MUST be disconnected, extended, rerouted, and then reconnected to the pressure switch in HORIZONTAL LEFT applications.

NOTE: See Fig. 10 or tube routing label on main furnace door to check for proper connections.

Modify tube as described below.

1. Disconnect collector box pressure tube (pink label) attached to pressure switch.
2. Use smaller diameter tube (factory-supplied in loose parts bag) to extend tube disconnected in item 1.
3. Route extended tube:
   a. Behind inducer housing.
   b. Between blower shelf and inducer housing.
   c. Behind inducer motor bracket.
   d. Between inducer motor and pressure switch.
4. Determine appropriate length, cut, and reconnect tube to pressure switch connection labeled COLLECTOR BOX.

CONDENSATE TRAP FREEZE PROTECTION

Refer to Condensate Drain Protection section for recommendations and procedures.

CONSTRUCT A WORKING PLATFORM

Construct working platform where all required furnace clearances are met. (See Fig. 3 and 11 or 12.)

⚠ CAUTION

UNIT MAY NOT OPERATE

Failure to follow this caution may result in intermittent unit operation.

The condensate trap MUST be installed below furnace. See Fig. 5 for dimensions. The drain connection to condensate trap must also be properly sloped to an open drain.

NOTE: Combustion-air and vent pipes are restricted to a minimum length of 5 ft. (1.5 M) (See Table 11.)

NOTE: A 12-in. (305 mm) minimum offset pipe section is recommended with short (5 to 8 ft (1.5 to 2.4 M)) vent systems. This recommendation is to reduce excessive condensate droplets from existing vent pipe. (See Fig. 11, 12 or 41.)

Step 5 - Horizontal Right (Supply-Air Discharge) Applications

A horizontal right furnace application is where furnace blower is located to the left of combustion and controls section of furnace, and conditioned air is discharged to the right.

⚠ CAUTION

MINOR PROPERTY DAMAGE

Failure to follow this caution may result in minor property damage.

Local codes may require a drain pan under entire furnace and condensate trap when a condensing furnace is used in attic application or over a finished ceiling.

NOTE: In Canada, installations shall be in accordance with current NSCNGPIC Installation Codes and/or local codes.

NOTE: The auxiliary junction box (J-Box) MUST be relocated to opposite side of furnace casing. (See Fig. 13.) See Electrical Connection section for J-Box relocation.

CONDENSATE TRAP LOCATION

The condensate trap must be removed from the factory-installed blower shelf location and relocated in selected application location as shown in Fig. 2 or 13.

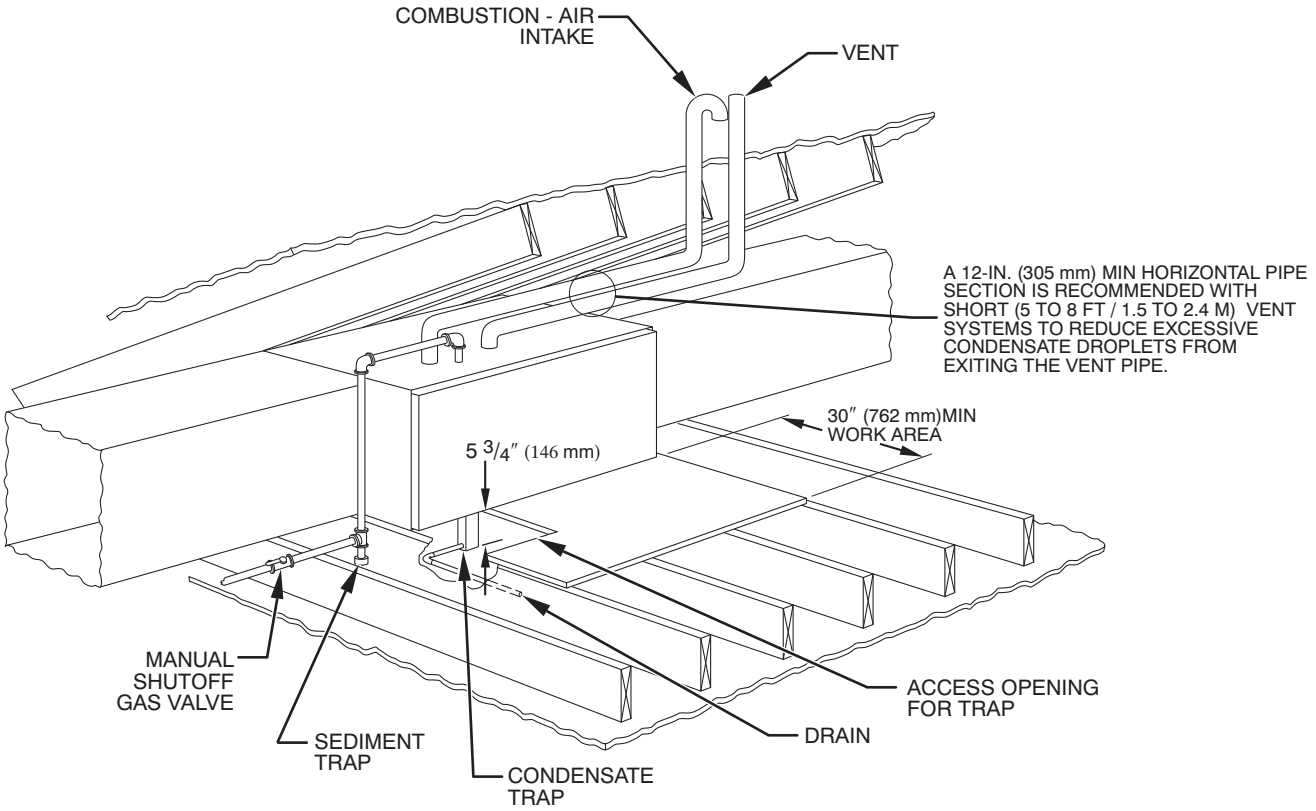

NOTE: LOCAL CODES MAY REQUIRE A DRAIN PAN UNDER THE FURNACE AND CONDENSATE TRAP WHEN A CONDENSING FURNACE IS INSTALLED ABOVE FINISHED CEILINGS.

A93031

Fig. 11 - Attic Location and Working Platform for Direct Vent (2-pipe) Application - All Sizes

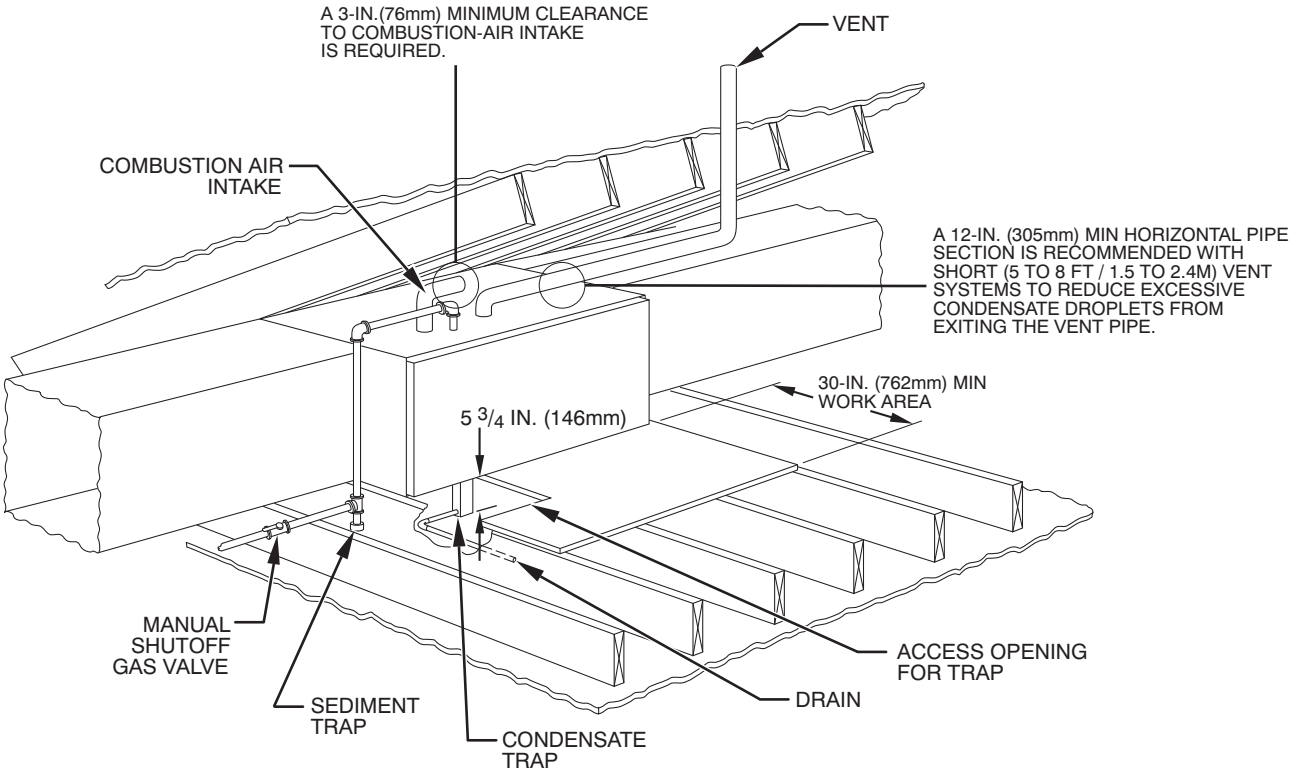

NOTE: LOCAL CODES MAY REQUIRE A DRAIN PAN UNDER THE FURNACE AND CONDENSATE TRAP WHEN A CONDENSING FURNACE IS INSTALLED ABOVE FINISHED CEILINGS.

A96184

Fig. 12 - Attic Location and Working Platform for Non-Direct Vent (1-pipe) Applications-Sizes 040 Through 120 Only

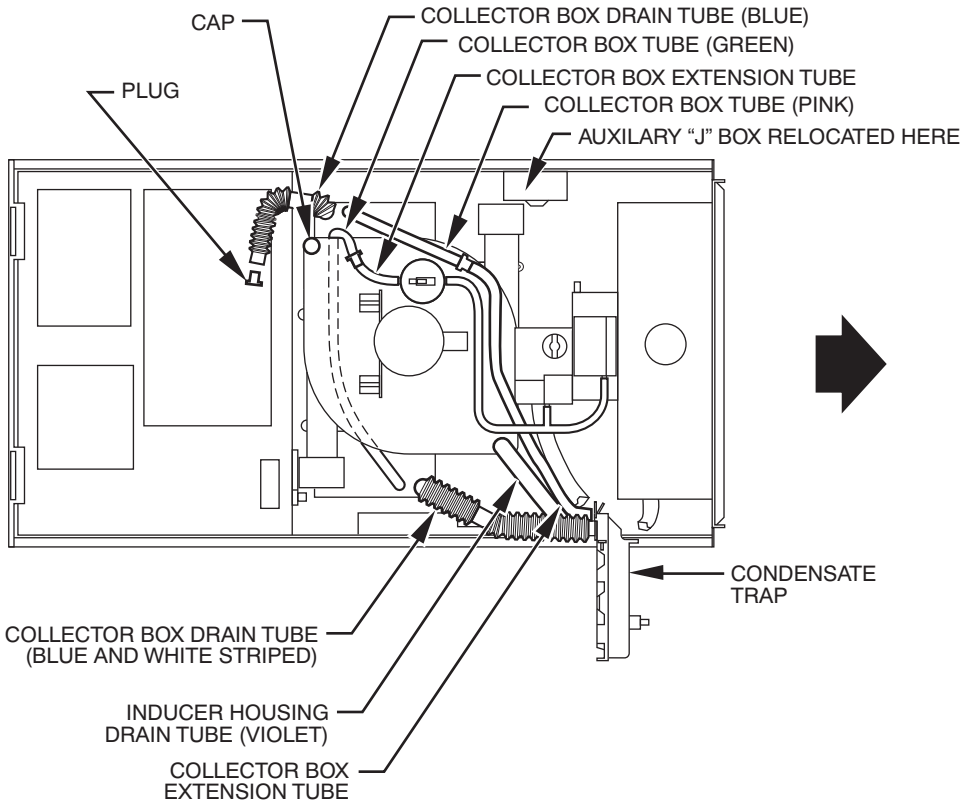

Fig. 13 - Horizontal Right Tube Configuration

PG9MAB

To relocate condensate trap from the blower shelf to desired location, perform the following:

1. Remove 3 tubes connected to condensate trap.
2. Remove trap from blower shelf by gently pushing tabs inward and rotating trap.
3. Install casing hole filler cap (factory-supplied in loose parts bag) into blower shelf hole where trap was removed.

⚠ WARNING

CARBON MONOXIDE POISONING HAZARD

Failure to follow this warning could result in personal injury or death.

Casing hole filler cap must be installed in blower shelf hole when condensate trap is relocated to prevent combustion products being drawn in from appliances in the equipment room.

4. Install condensate trap into desired casing hole by inserting tube connection stubs through casing hole and rotating until tabs snap into locking position.
5. Fill unused condensate trap casing holes with plastic filler caps (factory-supplied in loose parts bag).

CONDENSATE TRAP TUBING

NOTE: See Fig. 13 or tube routing label on main furnace door to check for proper connections.

1. Collector Box Drain Tube
   a. Remove factory-installed plug from LOWER collector box drain tube (blue and white striped label).
   b. Install removed clamp and plug into UPPER collector box drain tube (blue label) which was previously connected to condensate trap.
   c. Connect LOWER collector box drain tube (blue and white striped label) to condensate trap. Tube does not need to be cut.
   d. Clamp tube to prevent any condensate leakage.
2. Inducer Housing Drain Tube
   a. Remove factory-installed cap and clamp from LOWER inducer housing drain connection.
   b. Remove and discard UPPER (molded) inducer housing drain tube which was previously connected to condensate trap.
   c. Install cap and clamp on UPPER inducer housing drain connection where molded drain tube was removed.
   d. Use inducer housing drain extension tube (violet label and factory-supplied in loose parts bag) to connect LOWER inducer housing drain connection to condensate trap.
   e. Determine appropriate length, cut, and connect tube to condensate trap.
   f. Clamp tube to prevent any condensate leakage.
3. Relief Port Tube
   Refer to Pressure Switch Tubing section for connection procedure.

CONDENSATE TRAP FIELD DRAIN ATTACHMENT

Refer to Condensate Drain section for recommendations and procedures.

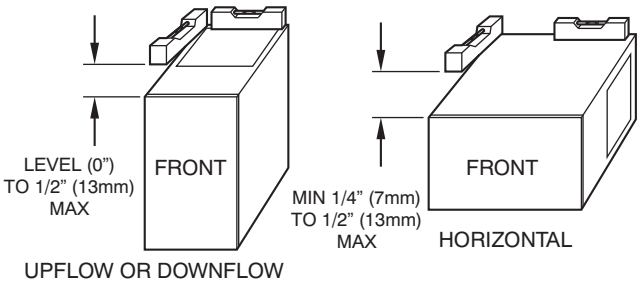

Fig. 14 - Furnace Location for Proper Condensate Drainage

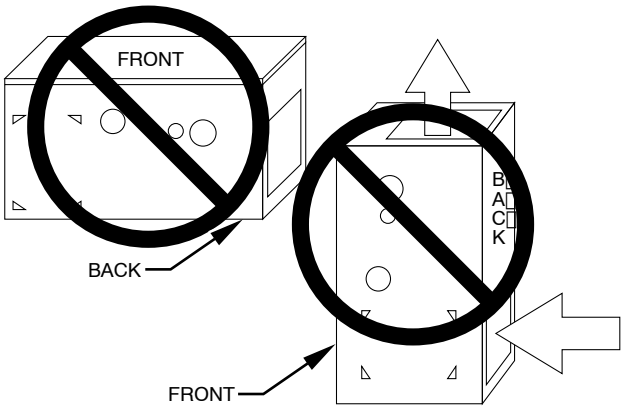

Fig. 15 - Installation on Back is Prohibited

PG9MAB

PRESSURE SWITCH TUBING

One collector box pressure tube (pink label) is factory connected to the pressure switch for use when furnace is installed in UPFLOW applications. This tube MUST be disconnected and used for the condensate trap relief port tube. The other collector box pressure tube (green label) which was factory connected to the condensate trap relief port connection MUST be connected to the pressure switch in DOWNFLOW or HORIZONTAL RIGHT applications.

NOTE: See Fig. 13 or tube routing label on main furnace door to check for proper connections.

Relocate tubes as described below:

1. Disconnect collector box pressure tube (pink label) attached to pressure switch.
2. Extend collector box pressure tube (green label) which was previously connected to condensate trap relief port connection by splicing to small diameter tube (factory-supplied in loose parts bag).
3. Route extended collector box pressure tube behind inducer motor bracket then between inducer motor and pressure switch.
4. Connect collector box pressure tube (green label) to pressure switch connection labeled COLLECTOR BOX.
5. Use remaining smaller diameter tube (factory-supplied in loose parts bag) to extend collector box pressure tube (pink label) which was previously connected to pressure switch.
6. Route this extended tube (pink label) to condensate trap relief port connection.
7. Determine appropriate length, cut, and connect tube.
8. Clamp tube to relief port connection.

CONDENSATE TRAP FREEZE PROTECTION

Refer to Condensate Drain Protection section for recommendations and procedures.

CONSTRUCT A WORKING PLATFORM

Construct working platform where all required furnace clearances are met. (See Fig. 3 and 11 or 12.)

⚠ CAUTION

UNIT MAY NOT OPERATE

Failure to follow this caution may result in intermittent unit operation.

The condensate trap MUST be installed below furnace. See Fig. 5 for dimensions. The drain connection to condensate trap must also be properly sloped to an open drain.

NOTE: Vent pipe(s) and combustion-air pipe (when applicable) are restricted to a minimum length of 5 ft. (See Table 11.)

NOTE: A 12-in. (305 mm) minimum offset pipe section is recommended with short (5 to 8 ft) vent systems. This recommendation is to reduce excessive condensate droplets from existing vent pipe. (See Fig. 11, 12 or 41.)

NOTE: The 140 size unit may NOT be installed in non-direct vent (1-pipe) application.

LOCATION

Step 1 - General

This furnace must

- be installed so the electrical components are protected from water.
- not be installed directly on any combustible material other than wood flooring (refer to SAFETY CONSIDERATIONS).
- be located so combustion-air and vent pipe maximum lengths are not exceeded. Refer to Table 11.
- be located where available electric power and gas supplies meet specifications on the furnace rating plate.
- be attached to an air distribution system and be located as close to the center of the distribution system as possible. Refer to Air Ducts section.
- be provided with ample space for servicing and cleaning. Always comply with minimum fire protection clearances shown on the furnace clearance to combustibles label.

NOTE: For upflow/downflow applications install furnace so that it is level or pitched forward within 1/2-in. (13 mm) for proper furnace operation. For horizontal applications pitch 1/4-in. (6 mm) minimum to 1/2-in. (13 mm)maximum forward to ensure proper condensate drainage from secondary heat exchangers. (See Fig. 14.)

When a furnace is installed so that supply ducts carry air circulated by the furnace to areas outside the space containing the furnace, the return air shall also be handled by duct(s) sealed to furnace casing and terminating outside the space containing the furnace to ensure there will not be a negative pressure condition within equipment room or space.

⚠ CAUTION

UNIT DAMAGE HAZARD

This gas furnace may be used for construction heat provided that:

-The furnace is permanently installed with all electrical wiring, piping, air filters, venting and ducting installed according to these installation instructions. A return air duct is provided, sealed to the furnace casing, and terminated outside the space containing the furnace. This prevents a negative pressure condition as created by the circulating air blower, causing a flame rollout and/or drawing combustion products into the structure.

-The furnace is controlled by a thermostat. It may not be "hot wired" to provide heat continuously to the structure without thermostatic control.

-Clean outside air is provided for combustion. This is to minimize the corrosive effects of adhesives, sealers and other construction materials. It also prevents the entrainment of drywall dust into combustion air, which can cause fouling and plugging of furnace components.

-The temperature of the return air to the furnace is maintained between 55°F (13°C) and 80°F (27°C), with no evening setback or shutdown. The use of the furnace while the structure is under construction is deemed to be intermittent operation per our installation instructions.

-The air temperature rise is within the rated rise range on the furnace rating plate, and the firing rate has been set to the nameplate value.

-The filters used to clean the circulating air during the construction process must be either changed or thoroughly cleaned prior to occupancy.

-The furnace, ductwork and filters are cleaned as necessary to remove drywall dust and construction debris from all HVAC system components after construction is completed.

-After construction is complete, verify furnace operating conditions including ignition, input rate, temperature rise and venting, according to the manufacturer's instructions.

⚠ WARNING

FIRE, INJURY OR DEATH HAZARD

Failure to follow this warning could result in fire, property damage, personal injury, or death.

Do **not** install furnace on its back. Safety control operation will be adversely affected. Never connect return-air ducts to back of furnace. (See Fig. 15.)

Step 2 - Furnace Location Relative to Cooling Equipment

The cooling coil must be installed parallel with or on downstream side of furnace to avoid condensation in heat exchanger. When installed parallel with a furnace, dampers or other means used to control flow of air shall be adequate to prevent chilled air from entering furnace. If dampers are manually operated, they must be equipped with a means to prevent operation of either unit unless damper is in full-heat or full-cool position.

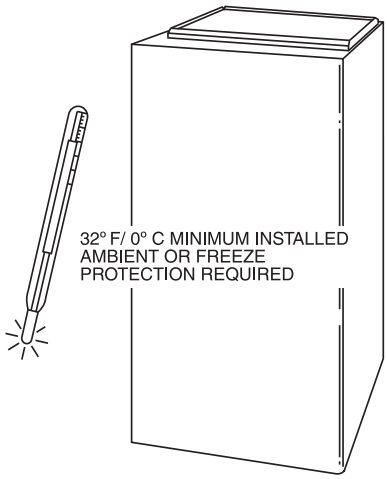

A07911

Fig. 16 - Freeze Protection

⚠ CAUTION

UNIT DAMAGE HAZARD

Failure to follow this caution may result in minor property or unit damage.

If this furnace is installed in an unconditioned space where ambient temperatures may be 32°F (0°C)or lower, freeze protection measures must be taken. (See Fig. 16.)

Step 3 - Hazardous Locations

⚠ WARNING

FIRE, EXPLOSION, INJURY OR DEATH HAZARD

Improper location or inadequate protection could result in fire or explosion.

When the furnace is installed in a residential garage, the burners and ignition sources must be located at least 18-in. (457 mm) above the floor. The furnace must be located or protected to avoid physical damage by vehicles. When the furnace is installed in a public garage, airplane hangar, or other building having a hazardous atmosphere, the furnace must be installed in accordance with the NFGC or NSCNGPIC. (See Fig. 17.)

Step 4 - Furnace Location and Application

DIRECT VENT (2-PIPE) APPLICATION

Furnace may be located in a confined space without special provisions for dilution or ventilation air.

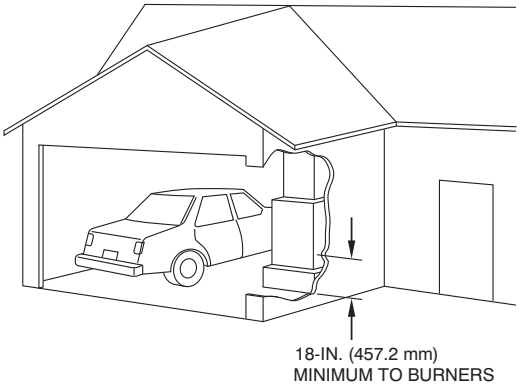

A93044

Fig. 17 - Installation in a Garage

Table 1 – Minimum Free Area Required for Each Combustion Air Opening or Duct to Outdoors

FURNACE INPUT (BTUH)	TWO HORIZONTAL DUCTS (1 SQ. IN./2,000 BTUH) (1,100 SQ. MM/KW)		SINGLE DUCT OR OPENING (1 SQ. IN./3,000 BTUH) (734 SQ. MM/KW)		TWO OPENINGS OR VERTICAL DUCTS (1 SQ. IN./4,000 BTUH) (550 SQ. MM/KW)	
	Free Area of Opening and Duct Sq. In. (mm)	Round Duct Dia. In. (mm)	Free Area of Opening and Duct Sq. In (mm)	Round Duct Dia. In. (mm)	Free Area of Opening and Duct Sq. In (mm)	Round Duct Dia. In. (mm)
44,000	22 (14194)	6 (152)	14.7 (9494)	5 (127)	11 (7097)	4 (102)
66,000	33 (21290)	7 (178)	22 (14193)	6 (152)	16.5 (10645)	5 (127)
88,000	44 (28387)	8 (203)	29.3 (18903)	7 (178)	22 (14193)	6 (152)
110,000	55 (35484)	9 (229)	36.7 (23677)	7 (178)	27.5 (17741)	6 (152)
132,000	66 (42581)	10 (254)	44 (28387)	8 (203)	33 (21290)	7 (198)
154,000	77 (49677)	10 (254)	51.3 (33096)	9 (229)	38.5 (24838)	8 (203)

EXAMPLE: **Determining Free Area**

FURNACE		WATER HEATER		TOTAL INPUT		
110,000	+	30,000	=	(140,000 divided by 4,000)	=	35.0 Sq. In. for each two Vertical Ducts or Openings
66,000	+	40,000	=	(106,000 divided by 3,000)	=	35.3 Sq. In. for a Single Duct or Opening
88,000	+	30,000	=	(118,000 divided by 2,000)	=	59.0 Sq. In. for each of two Horizontal Ducts

PG9MAB

Table 2 – Minimum Space Volumes for 100% Combustion, Ventilation and Dilution Air from Outdoors

ACH	OTHER THAN FAN-ASSISTED TOTAL (1,000'S BTUH GAS INPUT RATE)			FAN-ASSISTED TOTAL (1,000'S BTUH GAS INPUT RATE)					
	30	40	50	44	66	88	110	132	154
	Space Volume Ft^3 (M^3)								
0.60	1,050 (29.7)	1,400 (39.6)	1,750 (49.5)	1,100 (31.1)	1,650 (46.7)	2,200 (62.2)	2,750 (77.8)	3,300 (93.4)	3,850 (109.0)
0.50	1,260 (35.6)	1,680 (47.5)	2,100 (59.4)	1,320 (37.3)	1,980 (56.0)	2,640 (74.7)	3,300 (93.4)	3,960 (112.1)	4,620 (130.8)
0.40	1,575 (44.5)	2,100 (59.4)	2,625 (74.3)	1,650 (46.7)	2,475 (70.0)	3,300 (93.4)	4,125 (116.8)	4,950 (140.1)	5,775 (163.5)
0.30	2,100 (59.4)	2,800 (79.2)	3,500 (99.1)	2,200 (62.2)	3,300 (93.4)	4,400 (124.5)	5,500 (155.7)	6,600 (186.8)	7,700 (218.0)
0.20	3,150 (89.1)	4,200 (118.9)	5,250 (148.6)	3,300 (93.4)	4,950 (140.1)	6,600 (186.8)	8,250 (233.6)	9,900 (280.3)	11,550 (327.0)
0.10	6,300 (178.3)	8,400 (237.8)	10,500 (297.3)	6,600 (186.8)	9,900 (280.3)	13,200 (373.7)	16,500 (467.2)	19,800 (560.6)	23,100 (654.1)
0.00	NP	NP	NP	NP	NP	NP	NP	NP	NP

NON-DIRECT VENT (1-PIPE) APPLICATION

⚠ CAUTION

UNIT DAMAGE HAZARD

Failure to follow this caution may result in intermittent unit operation.

Do not install furnace in a corrosive or contaminated atmosphere. Make sure all combustion and circulating air requirements are met.

Refer to the AIR FOR COMBUSTION AND VENTILATION section for details.

AIR FOR COMBUSTION AND VENTILATION

Provisions for adequate combustion, ventilation, and dilution air must be provided in accordance with:

- **U.S. Installations:** Section 9.3 of the NFPA 54/ANSI Z223.1-2006, Air for Combustion and Ventilation and applicable provisions of the local building codes.
- **Canadian Installations:** Part 8 of the CAN/CSA-B149.1-05, Venting Systems and Air Supply for Appliances and all authorities having jurisdiction.

⚠ WARNING

FURNACE CORROSION HAZARD

Failure to follow this warning could result in reduced furnace component life.

Air for combustion must not be contaminated by halogen compounds, which include fluoride, chloride, bromide, and iodide. These elements could corrode heat exchangers and shorten furnace life. Air contaminants are found in aerosol sprays, detergents, bleaches, cleaning solvents, salts, air fresheners, and other household products.

The following types of furnace installations may require OUTDOOR AIR for combustion due to chemical exposures:

- Commercial buildings
- Buildings with indoor pools
- Laundry rooms
- Hobby or craft rooms, and
- Chemical storage areas

If air is exposed to the following substances, it should not be used for combustion air, and outdoor air may be required for combustion:

- Permanent wave solutions
- Chlorinated waxes and cleaners

- Chlorine based swimming pool chemicals
- Water softening chemicals
- De-icing salts or chemicals
- Carbon tetrachloride
- Halogen type refrigerants
- Cleaning solvents (such as perchloroethylene)
- Printing inks, paint removers, varnishes, etc.
- Hydrochloric acid
- Cements and glues
- Antistatic fabric softeners for clothes dryers
- Masonry acid washing materials

All fuel-burning equipment must be supplied with air for fuel combustion. Sufficient air **must** be provided to avoid negative pressure in the equipment room or space. A positive seal **must** be made between the furnace cabinet and the return-air duct to prevent pulling air from the burner area and from draft safeguard opening.

⚠ WARNING

CARBON MONOXIDE POISONING HAZARD

Failure to follow this warning could result in personal injury or death.

The operation of exhaust fans, kitchen ventilation fans, clothes dryers, attic exhaust fans or fireplaces could create a NEGATIVE PRESSURE CONDITION at the furnace. Make-up air MUST be provided for the ventilation devices, in addition to that required by the furnace. Refer to the Carbon Monoxide Poisoning Hazard warning in the venting section of these instructions to determine if an adequate amount of make-up air is available.

The requirements for combustion and ventilation air depend upon whether or not the furnace is located in a space having a volume of at least 50 cubic feet per 1,000 Btuh input rating for all gas appliances installed in the space.

- Spaces having less than 50 cubic feet per 1,000 Btuh require the **OUTDOOR COMBUSTION AIR** METHOD.
- Spaces having at least 50 cubic feet per 1,000 Btuh may use the **INDOOR COMBUSTION AIR, STANDARD or KNOWN AIR INFILTRATION** METHOD.

Outdoor Combustion Air Method

1. Provide the space with sufficient air for proper combustion, ventilation, and dilution of flue gases using permanent horizontal or vertical duct(s) or opening(s) directly communicating with the outdoors or spaces that freely communicate with the outdoors.
2. Fig. 18 illustrates how to provide TWO OUTDOOR OPENINGS, one inlet and one outlet combustion and ventilation air openings to the outdoors.
   a. One opening **MUST** commence within 12-in. (305 mm) of the ceiling and the second opening MUST commence within 12-in. (305 mm) of the floor.
   b. Size openings and ducts per Fig. 18 and Table 1.
   c. TWO HORIZONTAL DUCTS require 1 square inch of free area per 2,000 Btuh (1,100 mm^2/kW) of combined input for all gas appliances in the space per Fig. 18 and Table 1.
   d. TWO OPENINGS OR VERTICAL DUCTS require 1 square inch of free area per 4,000 Btuh (550 mm^2/kW) for combined input of all gas appliances in the space per Fig. 18 and Table 1.
3. ONE OUTDOOR OPENING requires:
   a. 1 square inch of free area per 3,000 Btuh (734 mm^2/kW) for combined input of all gas appliances in the space per Table 1 and
   b. Not less than the sum of the areas of all vent connectors in the space.
   The opening shall commence within 12-in. (305 mm) of the ceiling. Appliances in the space shall have clearances of at least 1-in. (25 mm) from the sides and back and 6-in. (152 mm) from the front. The opening shall directly communicate with the outdoors or shall communicate through a vertical or horizontal duct to the outdoors or spaces (crawl or attic) that freely communicate with the outdoors.

Indoor Combustion Air© NFPA & AGA

Standard and **Known-Air-Infiltration Rate** Methods

Indoor combustion air is permitted for combustion, ventilation, and dilution, if the **Standard** or **Known-Air-Infiltration Rate** Method is used.

⚠ WARNING

CARBON MONOXIDE POISONING HAZARD

Failure to supply outdoor air via grilles or ducts could result in death and/or personal injury.

Many homes require air to be supplied from outdoors for furnace combustion, ventilation, and dilution of flue gases. The furnace combustion air supply must be provided in accordance with this instruction manual.

The **Standard** Method:

1. The space has no less volume than 50 cubic feet per 1,000 Btuh of the maximum input ratings for all gas appliances installed in the space and
2. The air infiltration rate is not known to be less than 0.40 air changes per hour (ACH).

The **Known Air Infiltration Rate** Method shall be used, if the infiltration rate is known to be:

1. Less than 0.40 ACH and
2. Equal to or greater than 0.10 ACH

Infiltration rates greater than 0.60 ACH shall not be used. The minimum required volume of the space varies with the number of ACH and shall be determined per Table 2 or Equations 1 and 2. Determine the minimum required volume for each appliance in the space and add the volumes together to get the total minimum required volume for the space.

Table 2 - Minimum Space Volumes were determined by using the following equations from the National Fuel Gas Code NFPA 54/ANSI *Z223.1-2006, 9.3.2.2:*

1. For **other than fan-assisted appliances**, such as a draft hood-equipped water heater

$$\text{Volume}_{\text{Other}} = \frac{21\text{ft}^3}{\text{ACH}}\left(\frac{I_{\text{other}}}{1000\ \text{Btu/hr}}\right)$$

A04002

2. For **fan-assisted appliances** such as this furnace:

$$\text{Volume}_{\text{Fan}} = \frac{15\text{ft}^3}{\text{ACH}}\left(\frac{I_{\text{fan}}}{1000\ \text{Btu/hr}}\right)$$

A04003

PG9MAB

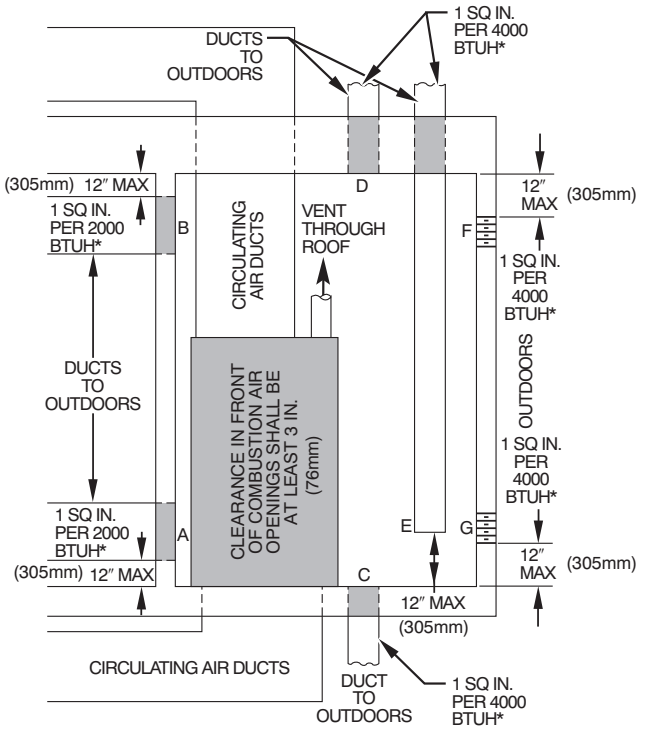

*Minimum dimensions of 3 in. (76 mm).
NOTE: Use any of the following combinations of openings:
A & B C & D D & E F & G

A03174

Fig. 18 - Air for Combustion, Ventilation, and Dilution for Outdoors

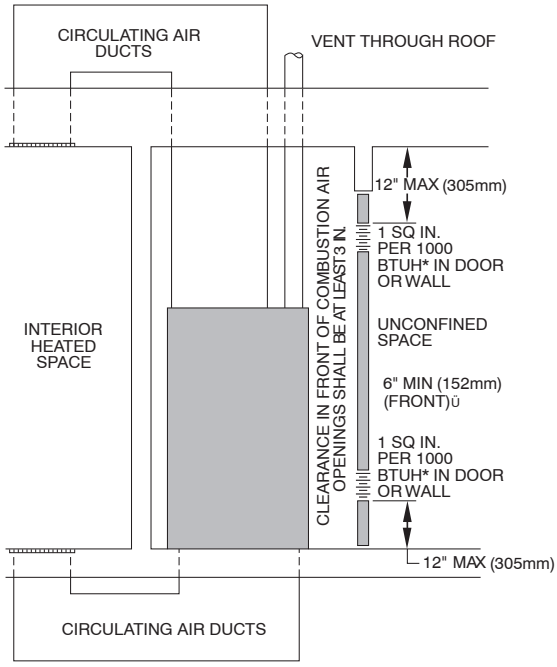

* Minimum opening size is 100 sq in. with minimum dimensions of 3 in. (76 mm)
† Minimum of 3 in. (76 mm) when type-B1 vent is used.

A03175

Fig. 19 - Air for Combustion, Ventilation, and Dilution from Indoors

If:

I_{other}=combined input of all **other than fan-assisted appliances** in Btu/hr

I_{fan}=combined input of all **fan-assisted appliances** in Btu/hr

ACH = air changes per hour (ACH shall not exceed 0.60.)

The following requirements apply to the **Standard** Method and to the **Known Air Infiltration Rate** Method.

1. Adjoining rooms can be considered part of a space if:
   a. There are no closable doors between rooms.
   b. Combining spaces on same floor level. Each opening shall have free area of at least 1-in.^{2}/1,000 Btuh (2,000 mm^2/kW) of the total input rating of all gas appliances in the space, but not less than 100-in.^{2} (0.06 m^2). One opening shall commence within 12 in. (305 mm) of the ceiling and the second opening shall commence within 12-in. (305 mm) of the floor. The minimum dimension of air openings shall be at least 3-in. (76 mm). (See Fig. 19.)
   c. Combining space on different floor levels. The volumes of spaces on different floor levels shall be considered as communicating spaces if connected by one or more permanent openings in doors or floors having free area of at least 2 in.^{2}/1,000 Btuh (4,400 mm^2/kW) of total input rating of all gas appliances.
2. An attic or crawlspace may be considered a space that freely communicates with the outdoors provided there are adequate permanent ventilation openings directly to outdoors having free area of at least 1-in.^{2}/4,000 Btuh of total input rating for all gas appliances in the space.
3. In spaces that use the **Indoor Combustion Air** Method, infiltration should be adequate to provide air for combustion, permanent ventilation and dilution of flue gases. However, in buildings with unusually tight construction, additional air MUST be provided using the methods described in the **Outdoor Combustion Air** Method section.
   Unusually tight construction is defined as
   Construction with:
   a. Walls and ceilings exposed to the outdoors have a continuous, sealed vapor barrier. Openings are gasketed or sealed and
   b. Doors and openable windows are weatherstripped and
   c. Other openings are caulked or sealed. These include joints around window and door frames, between sole plates and floors, between wall-ceiling joints, between wall panels, at penetrations for plumbing, electrical and gas lines, etc.

NOTE: In determining the free area of an opening, the blocking effect of the louvers, grilles, and screens must be considered. If the free area of a louver or grille design is unknown, it may be assumed that wood louvers have a 20 percent free area, and metal louvers or grilles have a 60 percent free area. Screens, when used, must not be smaller than 1/4-in. (6 mm) mesh. Louvers and grilles must be constructed so they cannot be closed.

When combustion air ducts are used, they must be of the same cross sectional area as the free area of the openings to which they connect. The minimum dimension of ducts must not be less than 3-in. (76 mm).

Combination of Indoor and Outdoor Air

1. Indoor openings shall comply with the **Indoor Combustion Air** Method below and,
2. Outdoor openings shall be located as required in the **Outdoor Combustion Air** Method mentioned previously and,
3. Outdoor openings shall be sized as follows:
   a. Calculate the Ratio of all Indoor Space volume divided by required volume for **Indoor Combustion Air** Method below.
   b. Outdoor opening size reduction **Factor** is 1 minus the **Ratio** in a. above.
   c. Minimum size of Outdoor openings shall be the size required in **Outdoor Combustion Air** Method above multiplied by reduction **Factor** in b. above. The minimum dimension of air openings shall be not less than 3-in. (76 mm).

INSTALLATION

NOTE: The 140 size unit may not be installed in non-direct vent (1-pipe) applications.

Step 1 - Leveling Legs (If Desired)

When furnace is used in upflow position with side inlet(s), leveling legs may be desired. (See Fig. 20.) Install field-supplied, corrosion-resistant 5/16-in. (8 mm) machine bolts and nuts.

NOTE: The maximum length of bolt should not exceed 1-1/2 in. (38 mm).

1. Position furnace on its back. Locate and drill a 5/16-in. (8 mm) diameter hole in each bottom corner of furnace. (See Fig. 20.) Holes in bottom closure panel may be used as guide locations.
2. For each hole, install nut on bolt and then install bolt and nut in hole. (Install flat washer if desired.)
3. Install another nut on other side of furnace base. (Install flat washer if desired.)
4. Adjust outside nut to provide desired height, and tighten inside nut to secure arrangement.

NOTE: Bottom closure must be used when leveling legs are used. See Bottom Closure Panel section.

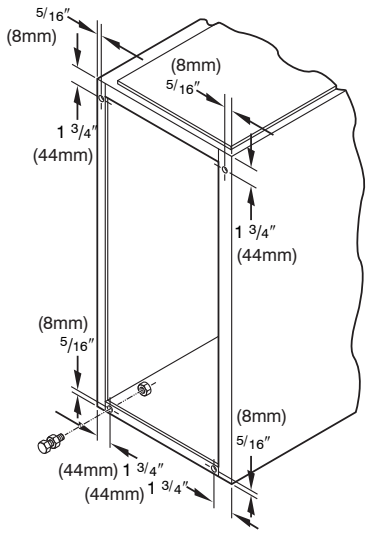

Fig. 20 - Leveling Legs

Step 2 - Installation in Upflow or Downflow Applications

NOTE: For downflow applications, this furnace is approved for use on combustible flooring when special base (available from manufacturer) Part No. KGASB0201ALL is used. Special base is not required when this furnace is installed on manufacturer's Coil Assembly Part No. CNPV, CAPV, CAP or CAR, or Coil Box Part No. KCAKC is used.

1. Determine application being installed from Table 3.
2. Construct hole in floor per dimensions specified in Table 3 and Fig. 21.
3. Construct plenum to dimensions specified in Table 3 and Fig. 21.
4. If downflow subbase (KGASB) is used, install as shown in Fig. 22.

   If Coil Assembly Part No. CNPV, CAPV, CAP or CAR or Coil Box Part No. KCAKC is used, install as shown in Fig. 23.

NOTE: Remove furnace perforated, discharge duct flanges when they interfere with mating flanges on coil on downflow sub base. To remove furnace perforated, discharge duct flange, use wide duct pliers or duct flange tool or hand seamers to bend flange back and forth until it breaks off. Be careful of sharp edges. (See Fig. 24.)

PG9MAB

⚠ CAUTION

UNIT MAY NOT OPERATE

Failure to follow this caution may result in intermittent unit operation.

Do not bend duct flanges inward as shown in Fig. 24. This will affect airflow across heat exchangers and may cause limit cycling or premature heat exchanger failure. Remove duct flange completely or bend it inward a minimum of 210° as shown in Fig. 24.

NOTE: For 140 size unit when installed in downflow orientation, cut the white jumper wire off between terminals PL1-7 and PL1-9. Do not cut white jumper between terminals PL1-7 and PL1-11. Refer to Fig. 31 for location of jumper. Cut jumper close to connector and remove wire to avoid a short circuit.

Step 3 - Installation in Horizontal Applications

⚠ CAUTION

UNIT MAY NOT OPERATE

Failure to follow this caution may result in intermittent unit operation.

The entire length of furnace MUST be supported when furnace is used in a horizontal position to ensure proper draining. When suspended, bottom brace supports sides and center blower shelf. When unit is supported from the ground, blocks or pad should support sides and center blower shelf area.

These furnaces can be installed horizontally in either horizontal left or right discharge position. In a crawlspace, furnace can either be hung from floor joist or installed on suitable blocks or pad. Furnace can be suspended from each corner by hanger bolts and angle iron supports. (See Fig. 25.) Cut hanger bolts (4 each 3/8-in. (10 mm) all-thread rod) to desired length. Use 1 X 3/8-in. flat washers, 3/8-in. lock washers, and 3/8-in. nuts on hanger rods as shown in Fig. 25. Dimples are provided for hole locations. (See Fig. 2.)

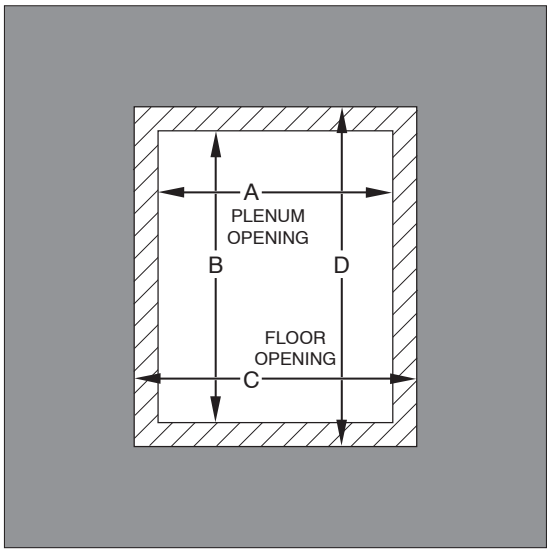

A96283

Fig. 21 - Floor and Plenum Opening Dimensions

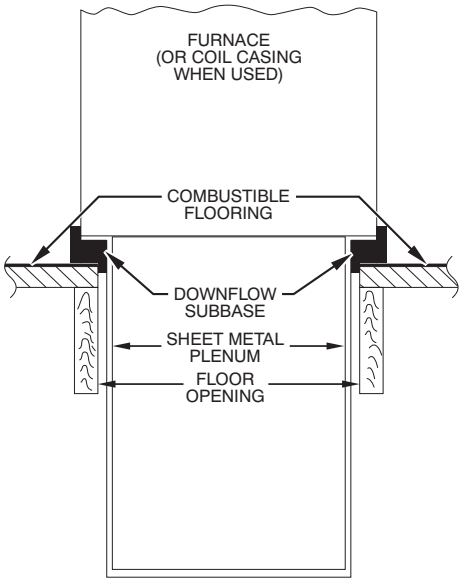

A96285

Fig. 22 - Furnace, Plenum, and Subbase Installed on a Combustible Floor

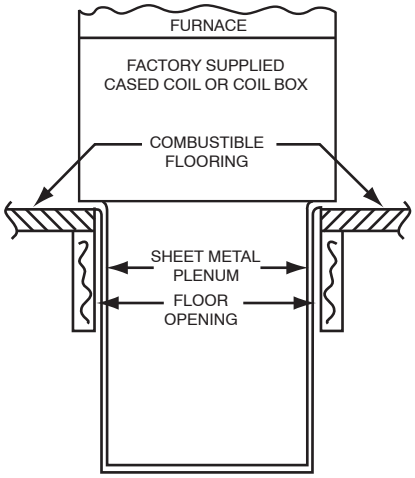

A07586

Fig. 23 - Furnace, Plenum, and Coil Assembly or Coil Box Installed on a Combustible Floor

Table 3 – Opening Dimension - In. (mm)

FURNACE CASING WIDTH	APPLICATION	PLENUM OPENING		FLOOR OPENING	
		A	B	C	D
17-1/2 (445)	Upflow Applications	16 (406)	24-1/8 (613)	16-5/8 (422)	24-3/4 (629)
	Downflow Applications on Non-Combustible Flooring	15-7/8 (403)	19 (483)	16-1/2 (419)	19-5/8 (498)
	Downflow Applications on Combustible Flooring Using KGASB Subbase Furnace with or without CAP, CAR, CNPV, CNRV Coil Assembly or KCAKC Coil Box	15-1/8 (384)	19 (483)	16-3/4 (425)	20-3/8 (518)
	Downflow Applications on Combustible Flooring NOT Using KGASB Subbase Furnace with CAP, CAR, CNPV, CNRV Coil Assembly or KCAKC Coil Box	15-1/2 (394)	19 (483)	16-1/2 (419)	20 (508)
21 (533)	Upflow Applications	19-1/2 (495)	24-1/8 (613)	20-1/8 (511)	24-3/4 (629)
	Downflow Applications on Non-Combustible Flooring	19-3/8 (492)	19 (483)	20 (508)	19-5/8 (498)
	Downflow Applications on Combustible Flooring Using KGASB Subbase Furnace with or without CAP, CAR, CNPV, CNRV Coil Assembly or KCAKC Coil Box	18-5/8 (473)	19 (483)	20-1/4 (514)	20-3/8 (518)
	Downflow Applications on Combustible Flooring NOT Using KGASB Subbase Furnace with CAP, CAR, CNPV, CNRV Coil Assembly or KCAKC Coil Box	19 (483)	19 (483)	20 (508)	20 (508)
24-1/2 (622)	Upflow Applications	23 (584)	24-1/8 (613)	23-5/8 (600)	24-3/4 (629)
	Downflow Applications on Non-Combustible Flooring	22-7/8 (581)	19 (483)	23-1/2 (597)	19-5/8 (498)
	Downflow Applications on Combustible Flooring Using KGASB Subbase Furnace with or without CAP, CAR, CNPV, CNRV Coil Assembly or KCAKC Coil Box	22-1/8 (562)	19 (483)	23-3/4 (603)	20-3/8 (518)
	Downflow Applications on Combustible Flooring NOT Using KGASB Subbase Furnace with CAP, CAR, CNPV, CNRV Coil Assembly or KCAKC Coil Box	22-1/2 (572)	19 (483)	23-1/2 (597)	20 (508)

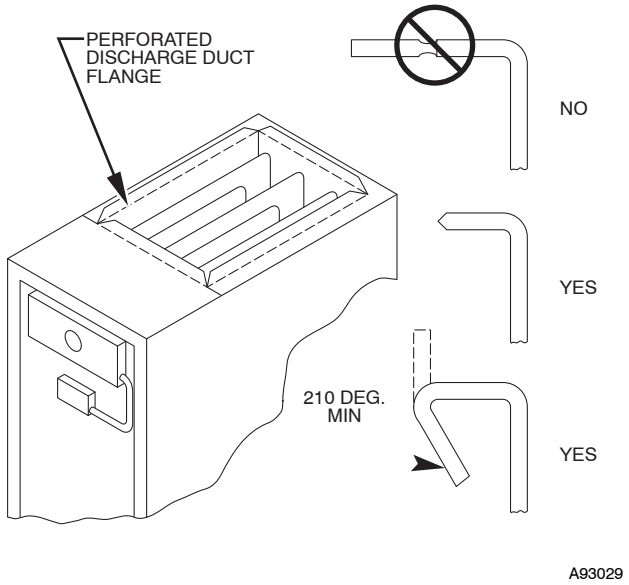

Fig. 24 - Duct Flanges

Step 4 - Air Ducts

GENERAL REQUIREMENTS

The duct system should be designed and sized according to accepted national standards such as those published by: Air Conditioning Contractors Association (ACCA), Sheet Metal and Air Conditioning Contractors National Association (SMACNA) or American Society of Heating, Refrigerating and Air Conditioning Engineers (ASHRAE) or consult The *Air Systems Design Guidelines* reference tables available from your local distributor. The duct system should be sized to handle the required system design CFM at the design static pressure.

When a furnace is installed so that the supply ducts carry air circulated by the furnace to areas outside the space containing the furnace, the return air shall also be handled by a duct(s) sealed to the furnace casing and terminating outside the space containing the furnace.

Secure ductwork with proper fasteners for type of ductwork used. Seal supply-and return-duct connections to furnace with code approved tape or duct sealer.

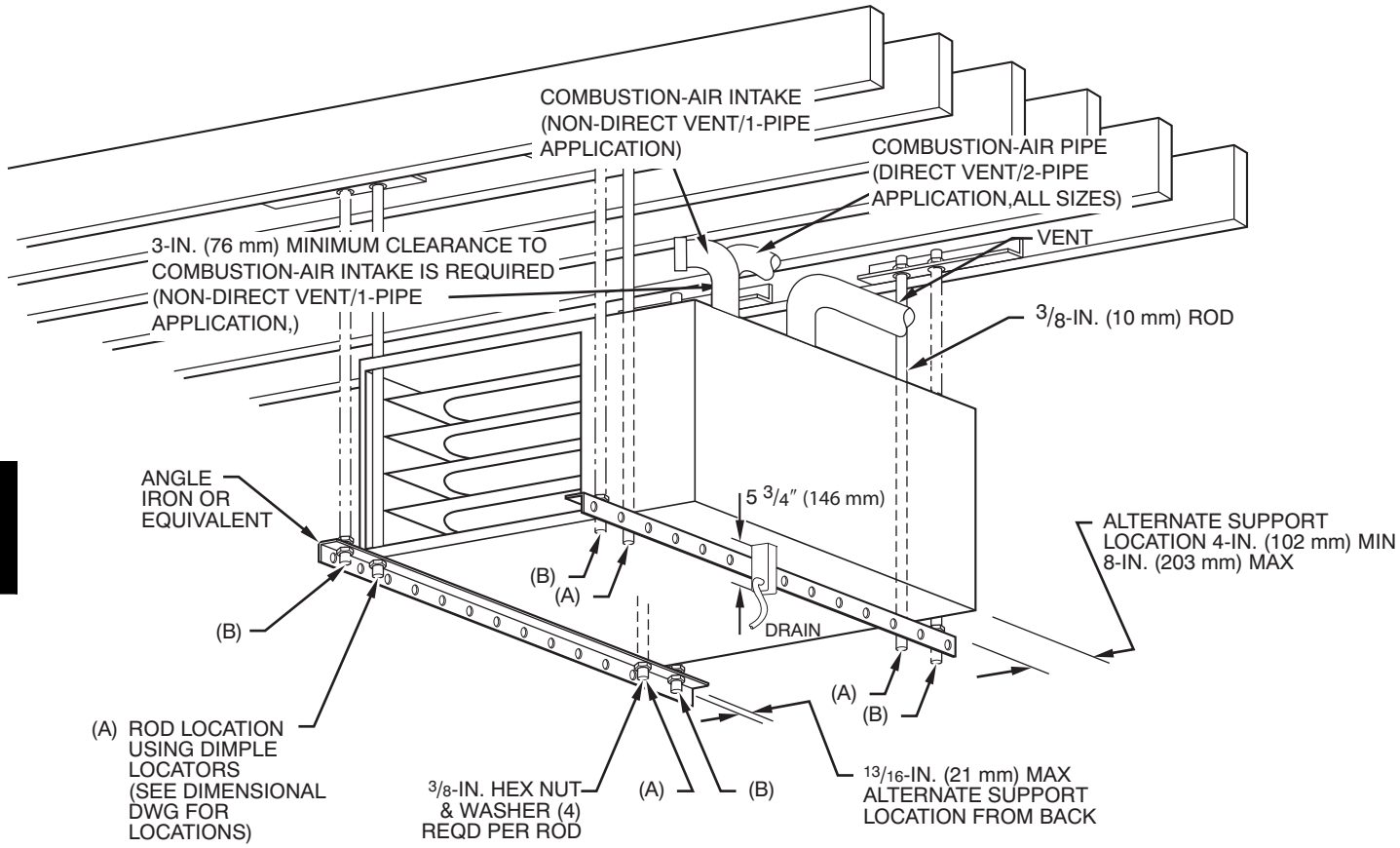

(A) PREFERRED ROD LOCATION

(B) ALTERNATE ROD LOCATION

NOTES:

1. A 1-in. (25.4 mm) clearance minimum between top of furnace and combustible material.

2. The entire length of furnace must be supported when furnace is used in horizontal position to ensure proper drainage.

3. For non-direct vent/1-pipe application, bottom side combustion-air entry cannot be used when furnace is installed with hangers as shown.

A05054

Fig. 25 - Crawlspace Horizontal Application for Direct Vent/2-Pipe Installation (Sizes 040 Through 140) and for Non-Direct Vent/1-Pipe Installation (Sizes 040 Through 120 Only)

Flexible connections should be used between duct work and furnace to prevent transmission of vibration. Ductwork passing through unconditioned space should be insulated to enhance system performance. When air conditioning is used, a vapor barrier is recommended.

Maintain a 1-in. (25 mm) clearance from combustible materials to supply air ductwork for a distance of 36-in. (914 mm) horizontally from the furnace. See NFPA 90B or local code for further requirements.

For a furnace not equipped with a cooling coil, the outlet duct shall be provided with a removable access panel. This opening shall be accessible when the furnace is installed and shall be of such a size that the heat exchanger can be viewed for possible openings using light assistance or a probe can be inserted for sampling the air stream. The cover attachment shall prevent leaks.

DUCTWORK ACOUSTICAL TREATMENT

Metal duct systems that do not have a 90 degree elbow and 10 ft (3.0 M) of main duct to the first branch take-off may require internal acoustical lining. As an alternative, fibrous ductwork may be used if constructed and installed in accordance with the latest edition of SMACNA construction standard on fibrous glass ducts. Both acoustical lining and fibrous ductwork shall comply with NFPA 90B as tested by UL Standard 181 for Class 1 Rigid air ducts.

SUPPLY AIR CONNECTIONS

Upflow Furnaces

Connect supply-air duct to 3/4-in. (19 mm) flange on furnace supply-air outlet. The supply-air duct attachment must ONLY be connected to furnace supply-/outlet-air duct flanges or air conditioning coil casing (when used). DO NOT cut main furnace casing to attach supply side air duct, humidifier, or other accessories. All accessories MUST be connected external to furnace main casing.

Downflow Furnaces

Connect supply-air duct to supply-air opening on furnace. The supply-air duct attachment must ONLY be connected to furnace

supply/outlet or air conditioning coil casing (when used), when installed on non-combustible material. When installed on combustible material, supply-air duct attachment must ONLY be connected to an accessory sub base or factory approved air conditioning coil casing. DO NOT cut main furnace casing to attach supply side air duct, humidifier, or other accessories. All accessories MUST be connected external to furnace main casing. Supply air opening duct flanges must be modified per Fig. 24.

Horizontal Furnaces

Connect supply-air duct to supply air opening on furnace. The supply-air duct attachment must ONLY be connected to furnace supply/outlet or air conditioning coil casing (when used). DO NOT cut main furnace casing to attach supply side air duct, humidifier, or other accessories. All accessories MUST be connected external to furnace main casing.

RETURN AIR CONNECTIONS

The furnace and its return air system shall be designed and installed so that negative pressure created by the air circulating fan cannot affect another appliance's combustion air supply or act to mix products of combustion with circulating air and the air circulating fan of the furnace, if installed in an enclosure communicating with another fuel-burning appliance not of the direct-vent type, shall be operable only when any door or panel covering an opening in the furnace fan compartment or in return air plenum on ducts is in the closed position.

Table 4 – Filter Information

AIR FILTER LOCATED IN BLOWER COMPARTMENT			
FURNACE CASING WIDTH IN (mm)	FILTER SIZE – IN (mm)		FILTER TYPE
	Side Return†*	Bottom Return*	
17–1/2 (445)	(1) 16 X 25 X 3/4 (406 X 635 X 19)	(1) 16 X 25 X 3/4 (406 X 635 X 19)	Washable
21 (533)	(1) 16 X 25 X 3/4 (406 X 635 X 19)	1) 20 X 25 X 3/4 (508 X 635 X 19)	Washable
24–1/2 (622)	(1 or 2)16 X 25 X 3/4 (406 X 635 X 19)	(1) 24 X 25 X 3/4 (610 X 635 X 19)	Washable

*Alternate sizes and additional filters can be ordered from your distributor or dealer.

†Upflow only. Alternate sizes and additional filters may be ordered from your dealer.

⚠ WARNING

FIRE HAZARD

A failure to follow this warning could result in fire, personal injury, or death.

Never connect return-air ducts to the back of the furnace. Return-air duct connections on furnace side(s) permitted in upflow applications only.

Upflow Furnaces

The return-air duct must be connected to end, sides (left or right), or a combination of end and side(s) of main furnace casing as shown in Fig. 2. Bypass humidifier may be attached into unused side return air portion of the furnace casing. DO NOT connect any portion of return-air duct to back of furnace casing.

Downflow and Horizontal Furnaces

The return-air duct must be connected to end inlet opening provided as shown in Fig. 2. DO NOT cut into casing sides or back to attach any portion of return-air duct. Bypass humidifier connections should be made at ductwork or coil casing sides exterior to furnace.

Step 5 - Filter Arrangement

⚠ WARNING

FIRE, CARBON MONOXIDE AND POISONING HAZARD

Failure to follow this warning could result in fire, personal injury, or death.

Never operate a unit without a filter or with filter access door removed.

Determine location for filter and relocate filter retaining wire if necessary. See Table 4 to determine correct filter size for desired filter location. Table 4 indicates filter size and location for this furnace. See Fig. 2 for location and size of bottom and side return-air openings.

⚠ CAUTION

CUT HAZARD

Failure to follow this caution may result in minor personal injury.

Use care when cutting support rods in filters to protect against flying pieces and sharp rod ends. Wear safety glasses, gloves, and appropriate protective clothing.

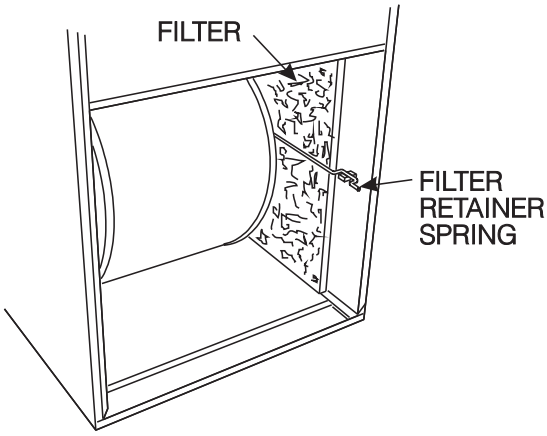

Fig. 26 - Filter Installed for Side Inlet

⚠ CAUTION

UNIT MAY NOT OPERATE

Failure to follow this caution may result in intermittent unit operation.

For airflow requirements above 1800 CFM, see Air Delivery table in Product Data literature for specific use of single side inlets. The use of both side inlets, a combination of 1 side and the bottom, or the bottom only will ensure adequate return air openings for airflow requirements above 1800 CFM.

NOTE: Side return-air openings can ONLY be used in UPFLOW configurations. Install filter(s) as shown in Fig. 26.

Bottom return-air opening may be used with all 4 orientations. Filter may need to be cut to fit some furnace widths. Install filter as shown in Fig. 27.

NOTE: Remove and discard bottom closure panel when bottom inlet is used.

Step 6 - Bottom Closure Panel

These furnaces are shipped with bottom enclosure panel installed in bottom return-air opening. This panel MUST be in place when side return air is used.

To remove bottom closure panel, perform following:

1. Tilt or raise furnace and remove 2 screws holding front filler panel. (See Fig. 28.)
2. Rotate front filler panel downward to release holding tabs.
3. Remove bottom closure panel.
4. Reinstall front filler panel and screws.

Step 7 - Gas Piping

Gas piping must be installed in accordance with national and local codes. Refer to current edition of NFGC in the United States. Canadian installations must be made in accordance with NSCNGPIC and all authorities having jurisdiction.

Gas supply line should be a separate line running directly from meter to furnace, if possible. Refer to Table 5 for recommended gas pipe sizing. Risers must be used to connect to furnace and to meter. Support all gas piping with appropriate straps, hangers, etc. Use a minimum of 1 hanger every 6 ft (1.8 M). Joint compound (pipe dope) should be applied sparingly and only to male threads of joints. Pipe dope must be resistant to propane gas.

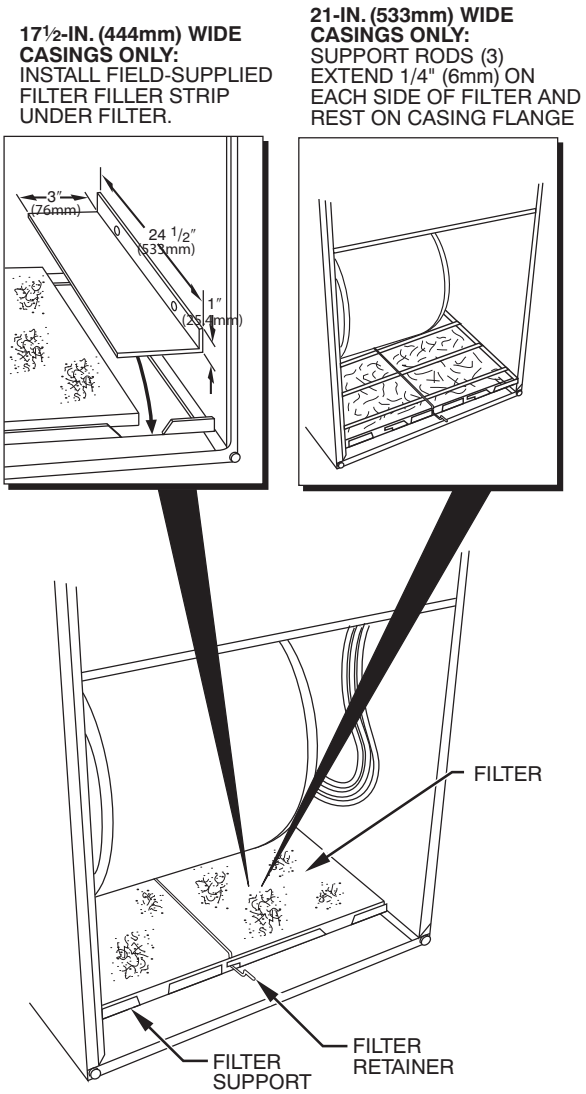

Fig. 27 - Bottom Filter Arrangement

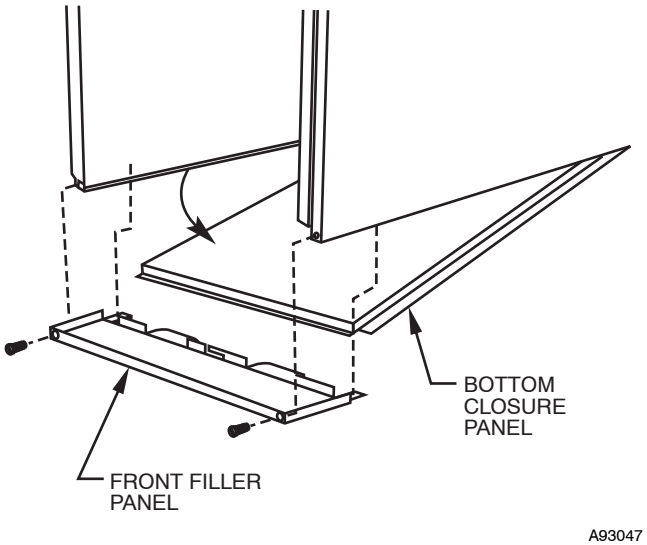

Fig. 28 - Removing Bottom Closure Panel

Table 5 – Maximum Capacity of Pipe *

NOMINAL IRON PIPE SIZE IN. (MM)	INTERNAL DIA. IN. (MM)	LENGTH OF PIPE – FT (M)				
		10 (3.0)	20 (6.0)	30 (9.1)	40 (12.1)	50 (15.2)
1/2 (12.7)	0.622 (158)	175	120	97	82	73
3/4 (19.0)	0.824 (20.9)	360	250	200	170	151
1 (25.4)	1.049 (26.6)	680	465	375	320	285
1-1/4 (31.8)	1.380 (35.0)	1400	950	770	660	580
1-1/2 (38.1)	1.610 (40.9)	2100	1460	1180	990	900

* Cubic ft of gas per hr for gas pressures of 0.5 psig (14–in. wc) or less and a pressure drop of 0.5–in wc (based on a 0.60 specific gravity gas). Ref: Table 9.2 NFGC.

⚠ WARNING

FIRE OR EXPLOSION HAZARD

Failure to follow this warning could result in fire, explosion, personal injury, or death.

- Connect gas pipe to furnace using a backup wrench to avoid damaging gas controls.
- Gas valve shutoff switch MUST be facing forward or tilted upward.
- Never purge a gas line into a combustion chamber. Never test for gas leaks with an open flame. Use a commercially available soap solution made specifically for the detection of leaks to check all connections.
- Use proper length of pipe to avoid stress on gas control manifold.
- If a flexible connector is required or allowed by authority having jurisdiction, black iron pipe shall be installed at furnace gas valve and extend a minimum of 2-in. (51 mm) outside furnace casing.
- Protect gas valve from water and debris. Gas valve inlet and/or inlet piping must remain capped until gas supply line is permanently installed to protect the valve from moisture and debris. Also, install a sediment trap in the gas supply piping at the inlet to the gas valve.

Install a sediment trap in riser leading to furnace. Trap can be installed by connecting a tee to riser leading to furnace so straight-through section of tee is vertical. Then connect a capped nipple into lower end of tee. Capped nipple should extend below

level of gas controls. Place a ground joint union between gas control manifold and manual gas shutoff valve. (See Fig. 29.)

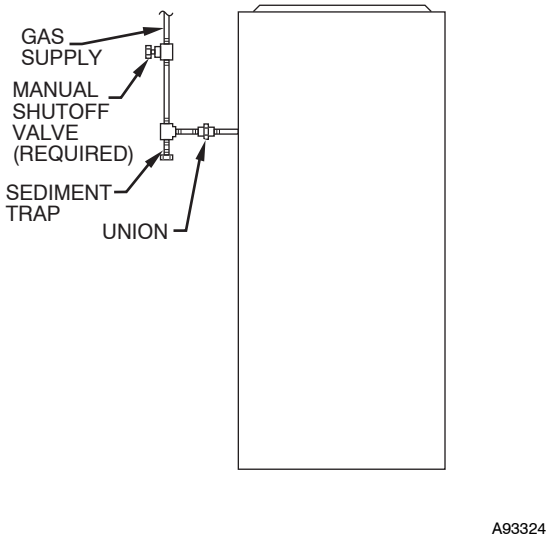

Fig. 29 - Typical Gas Pipe Arrangement

If local codes allow the use of a flexible gas appliance connector, always use a new listed connector. Do not use a connector which has previously served another gas appliance.

⚠ WARNING

FIRE OR EXPLOSION HAZARD

Failure to follow this safety warning exactly could result in serious injury, death or property damage.

Never test for gas leaks with an open flame. Use a commercially available soap solution made specifically for the detection of leaks to check all connections. A fire or explosion could result causing property damage, personal injury or loss of life.

An accessible manual shutoff valve MUST be installed external to furnace casing and within 6 ft (1.8 M) of furnace. A 1/8-in. (3 mm) NPT plugged tapping, accessible for test gauge connection, MUST be installed immediately upstream of gas supply connection to furnace and downstream of manual shutoff valve.

NOTE: The gas valve inlet pressure tap connection is suitable to use as test gauge connection providing test pressure DOES NOT exceed maximum 0.5 psig (14-in. wc) stated on gas valve. (See Fig. 48.)

Piping should be pressure and leak tested in accordance with NFGC in the United States or NSCNGPIC in Canada, local, and national plumbing and gas codes before the furnace has been connected. After all connections have been made, purge lines and check for leakage at furnace prior to operating furnace.

If pressure exceeds 0.5 psig (14-in. wc), gas supply pipe must be disconnected from furnace and capped before pressure test. If test pressure is equal to or less than 0.5 psig (14-in. wc), turn off electric shutoff switch located on furnace gas valve and accessible manual shutoff valve before test.

The gas supply pressure shall be within the maximum and minimum inlet supply pressures marked on the rating plate with the furnace burners ON and OFF.

Step 8 - Electrical Connections

See Fig. 30 for field wiring diagram showing typical field 115-v and 24-v wiring. Check all factory and field electrical connections for tightness.

Field-supplied wiring shall conform with the limitations of 63°F (35°C) rise.

⚠ WARNING

ELECTRICAL SHOCK HAZARD

Failure to follow this warning could result in serious injury or death.

Blower access panel door switch opens 115-v power to control center. No component operation can occur. Do not bypass or close switch with panel removed.

⚠ CAUTION

FURNACE MAY NOT OPERATE

Failure to follow this caution may result in furnace operation stopping and water pipes freezing during cold weather.

Furnace control must be grounded for proper operation or control will lock out. Control is grounded through green/yellow wire routed to gas valve and burner box screw.

Table 6 – Electrical Data

UNIT SIZE	VOLTS-HERTZ-PHASE	OPERATING VOLTAGE RANGE		MAX UNIT AMPS	UNIT AMPACITY†	MIN WIRE SIZE	MAX WIRE LENGTH FT (M)‡	MAX FUSE OR CKT BKR AMPS**
		Max*	Min*					
040–08 / 024040	115—60—1	127	104	6.1	8.4	14	44 (13.4)	15
040–12 / 036040	115—60—1	127	104	7.3	10.0	14	37 (11.2)	15
060–08 / 024060	115—60—1	127	104	6.1	8.4	14	44 (13.4)	15
060–12 / 036060	115—60—1	127	104	7.1	9.8	14	38 (11.5)	15
060–16 / 048060	115—60—1	127	104	9.5	12.8	14	29 (8.8)	15
080–12 / 036080	115—60—1	127	104	7.6	10.4	14	36 (10.9)	15
080–16 / 048080	115—60—1	127	104	10.0	13.4	14	28 (8.5)	15
080–20 / 060080	115—60—1	127	104	14.1	18.4	12	31 (9.4)	20
100–16 / 048100	115—60—1	127	104	10.2	13.5	14	27 (8.2)	15
100–20 / 060100	115—60—1	127	104	14.8	19.3	12	30 (9.1)	20
120–20 / 060120	115—60—1	127	104	14.6	19.1	12	30 (9.1)	20
140–20 / 060140	115—60—1	127	104	14.3	18.8	12	30 (9.1)	20

* Permissible limits of voltage range at which unit will operate satisfactorily.

† Unit ampacity = 125 percent of largest operating component's full load amps plus 100 percent of all other potential operating components' (EAC, humidifier, etc.) full load amps.

‡ Length shown is as measured 1 way along wire path between unit and service panel for maximum 2 percent voltage drop.** Time-delay type is recommended

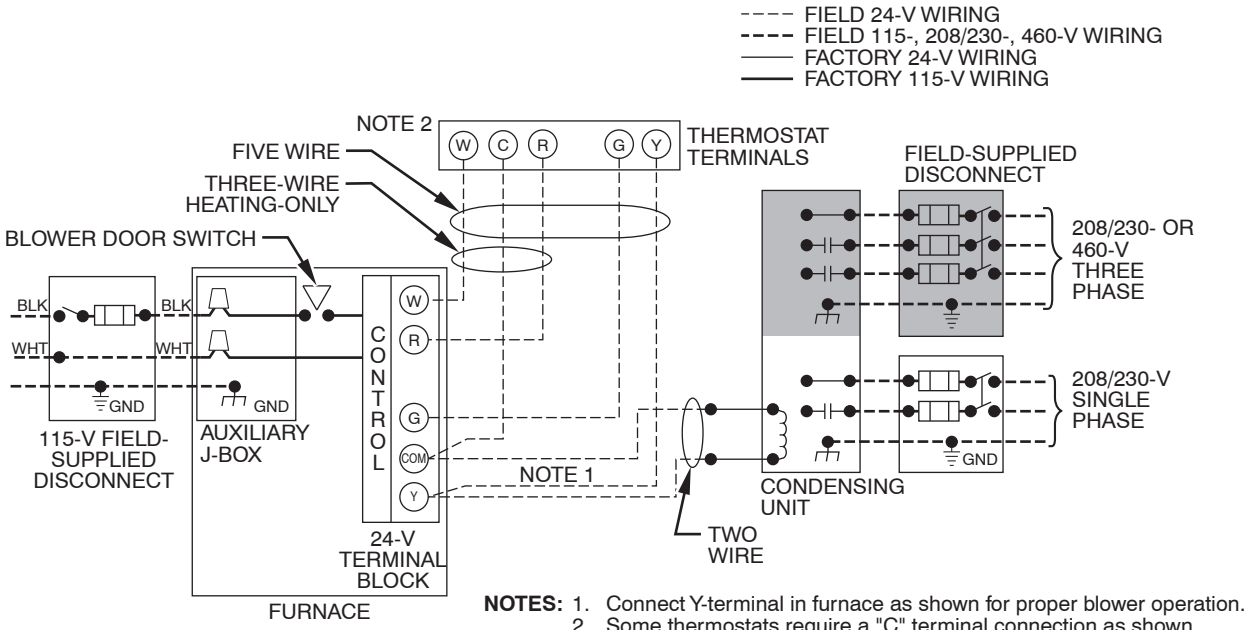

NOTES: 1. Connect Y-terminal in furnace as shown for proper blower operation.
2. Some thermostats require a "C" terminal connection as shown.
3. If any of the original wire, as supplied, must be replaced, use same type or equivalent wire.

Fig. 30 - Heating and Cooling Application Wiring Diagram

115-V WIRING

Before proceeding with electrical connections, make certain that voltage, frequency, and phase correspond to that specified on unit rating plate. Also, check to be sure that service provided by power supply is sufficient to handle load imposed by this equipment. Refer to rating plate or Table 6 for equipment electrical specifications.

The furnace must be electrically grounded in accordance with local codes; or in the absence of local codes, with the National Electric Code ANSI/NFPA 70 and/or the Canadian Electric Code, CSA C22.1, Part I, if an external electrical source is utilized.

⚠ WARNING

FIRE HAZARD

Failure to follow this warning could result in serious injury, death, or property damage.

Do not connect aluminum wire between disconnect switch and furnace. Use only copper wire. (See Fig. 31.)

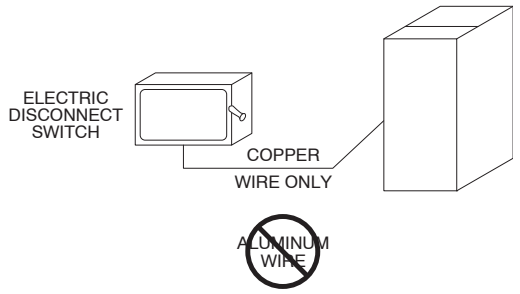

A93033

Fig. 31 - Disconnect Switch and Furnace

Use a separate, fused branch electrical circuit containing a properly sized fuse or circuit breaker for this furnace. See Table 6 for wire size and fuse specifications. A disconnecting means must be located within sight from and readily accessible to furnace.

NOTE: Proper polarity must be maintained for 115-v wiring. If polarity is incorrect or the furnace is not grounded, control center LED status indicator light will flash rapidly and furnace will NOT operate.

A02174

⚠ WARNING

ELECTRICAL SHOCK AND FIRE HAZARD

Failure to follow this warning could result in serious injury, death, or property damage.

The cabinet MUST have an uninterrupted or unbroken ground according to NEC ANSI/NFPA 70-2008 and Canadian Electrical Code CSA C22.1 or local codes to minimize personal injury if an electrical fault should occur. This may consist of electrical wire or conduit approved for electrical ground when installed in accordance with existing electrical codes. Do not use gas piping as an electrical ground.

J-Box Relocation

1. Remove 2 screws holding auxiliary J-box. (See Fig. 32.)
2. Rotate J-box 180° and attach box to left side, using holes provided.

⚠ WARNING

ELECTRICAL SHOCK AND FIRE HAZARD

Failure to follow this warning could result in serious injury, death, or property damage.

If manual disconnect switch is to be mounted on furnace, select a location where a drill or fastener will not contact electrical or gas components.

24-V WIRING

Make field 24-v thermostat connections at 24-v terminal block on furnace control center. For proper cooling operation, Y wire from thermostat MUST be connected to Y terminal on furnace control center, as shown in Fig. 30. The 24-v terminal block is marked for easy connection of field wiring. (See Fig. 33.) The 24-v circuit contains a 3-amp, automotive-type fuse located on furnace control center. (See Fig. 34.) Any electrical shorts of 24-v wiring during installation, service, or maintenance may cause fuse to blow. If fuse replacement is required, use only a fuse of identical size (3 amp) and type. The control will flash code 24 when fuse needs replacement.

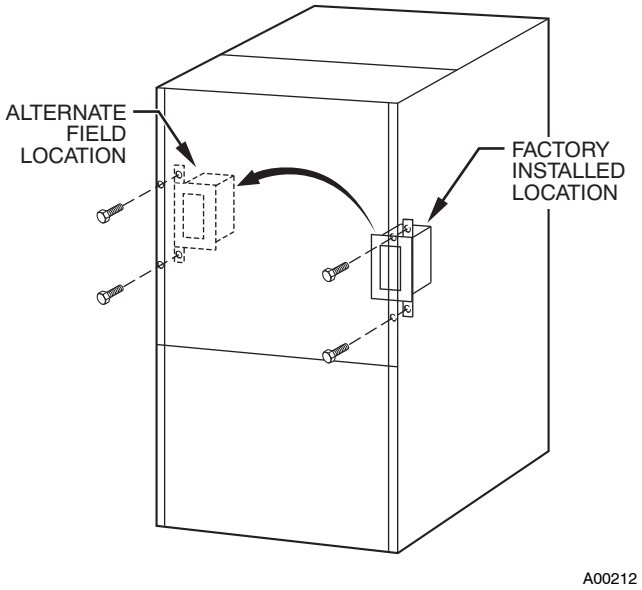

Fig. 32 - Relocating J-Box

NOTE: Use AWG No. 18 color-coded copper thermostat wire for lengths up to 100 ft (30.5 M). For wire lengths over 100 ft, use AWG No. 16 wire.

ACCESSORIES

1. Electronic Air Cleaner (EAC)
   Two quick-connect terminals marked EAC-1 and EAC-2 are provided for EAC connection. (See Fig. 34.) These terminals are energized with 115v (1.0-amp maximum) during blower motor operation.

⚠ CAUTION

UNIT DAMAGE HAZARD

Failure to follow this caution may result in unit component damage.

DO NOT connect furnace control HUM terminal to HUM (humidifier) terminal on Thermidistat™, Zone Controller or similar device. See Thermidistat™, Zone Controller, thermostat, or controller manufacturer's instructions for proper connection.

2. Humidifier (HUM)
   A quick-connect terminal (HUM) and screw terminal (COM 24v) are provided for 24v humidifier connection. (See Fig. 34.) HUM terminal is energized with 24v (0.5-amp maximum) when gas valve is energized.

NOTE: A field-supplied, 115-v controlled relay connected to EAC terminals may be added if humidifier operation is desired during blower operation.

Step 9 - Removal of Existing Furnaces from Common Vent Systems

When an existing Category I furnace is removed or replaced, the original venting system may no longer be sized to properly vent the remaining attached appliances. An improperly sized Category I venting system could cause the formation of condensate in the furnace and vent, leakage of condensate and combustion products, spillage of combustion products into the living space, etc.

Step 10 - Combustion Air and Vent Pipe Systems

GENERAL

Vent system or vent connectors may need to be resized. For any other appliances when resizing vent systems or vent connectors, system or connector must be sized to approach minimum size as determined using appropriate table found in the NFGC or NSCNGPIC.

The PG9MAB can be vented as either a direct vent (all sizes) or as a non-direct vent (except for 140 size) application. A direct vent system shall be installed in accordance with the direct vent (2-pipe) procedures in the following Combustion Air and Vent Pipe Systems section. For non-direct vent (1-pipe) applications, refer to the non-direct vent (1-pipe) procedures in the same section.

Multistory and common venting are prohibited.

DIRECT VENT/2-PIPE SYSTEM (ALL SIZES)

In a direct-vent (2-pipe) system, all air for combustion is taken directly from outdoor atmosphere, and all flue products are discharged to outdoor atmosphere. A factory accessory vent termination kit MUST be used in a direct vent (2-pipe) system.

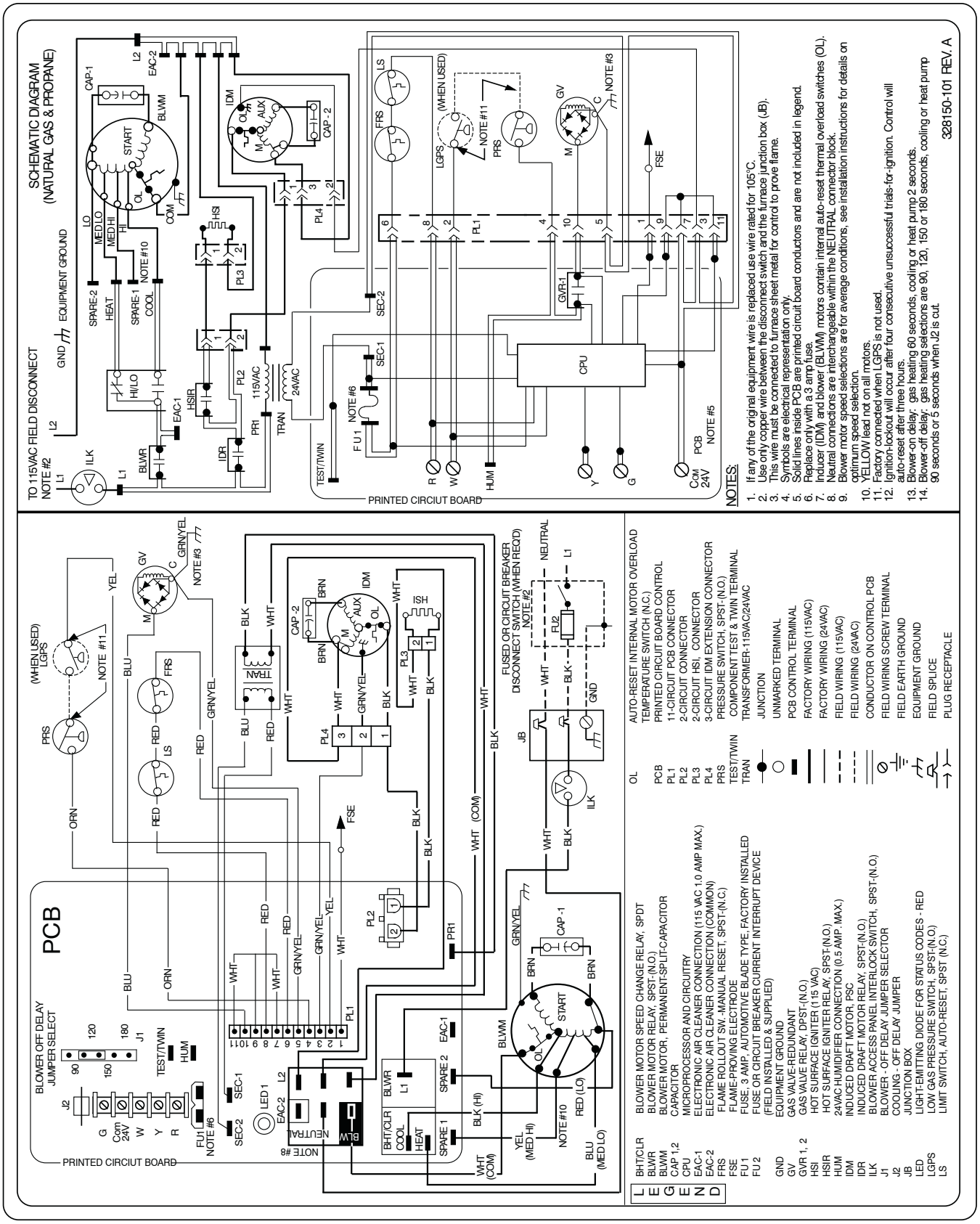

Fig. 33 - Wiring Diagram

NON-DIRECT VENT/1-PIPE SYSTEM (SIZES 040 THROUGH 120 ONLY)

In a non-direct vent (1-pipe) system, all air for combustion is taken from the area adjacent to furnace, and all flue products are discharged to outdoor atmosphere. A factory-supplied perforated disk assembly (in loose parts bag) MUST be used in combustion-air pipe elbow.

⚠ WARNING

CARBON MONOXIDE POISONING HAZARD

Failure to follow the steps outlined below for each appliance connected to the venting system being placed into operation could result in carbon monoxide poisoning or death.

The following steps shall be followed for each appliance connected to the venting system being placed into operation, while all other appliances connected to the venting system are not in operation:

1. Seal any unused openings in venting system.
2. Inspect the venting system for proper size and horizontal pitch, as required in the National Fuel Gas Code, NFPA 54/ANSI Z223.1-2006/NFPA 54-2006 or the CSA B149.1-05, Natural Gas and Propane Installation Code and these instructions. Determine that there is no blockage or restriction, leakage, corrosion and other deficiencies, which could cause an unsafe condition.
3. As far as practical, close all building doors and windows and all doors between the space in which the appliance(s) connected to the venting system are located and other spaces of the building.
4. Close fireplace dampers.
5. Turn on clothes dryers and any appliance not connected to the venting system. Turn on any exhaust fans, such as range hoods and bathroom exhausts, so they are operating at maximum speed. Do not operate a summer exhaust fan.
6. Follow the lighting instructions. Place the appliance being inspected into operation. Adjust the thermostat so appliance is operating continuously.
7. Test for spillage from draft hood equipped appliances at the draft hood relief opening after 5 minutes of main burner operation. Use the flame of a match or candle.
8. If improper venting is observed during any of the above tests, the venting system must be corrected in accordance with the National Fuel Gas Code, NFPA 54/ANSI Z223.1-2006 and/or CSA B149.1-05, Natural Gas and Propane Installation Code.
9. After it has been determined that each appliance connected to the venting system properly vents when tested as outlined above, return doors, windows, exhaust fans, fireplace dampers and any other gas-fired burning appliance to their previous conditions of use.

MATERIALS

Combustion-air and vent pipe, fittings, primers, and solvents must conform to American National Standards Institute (ANSI) standards and American Society for Testing and Materials (ASTM) standards. See Table 7 for approved materials for use in the U.S.A.

⚠ WARNING

FIRE AND EXPLOSION HAZARD

Failure to follow this warning could result in fire, property damage, personal injury, or death.

Solvent cements are combustible. Keep away from heat, sparks, and open flame. Use only in well-ventilated areas. Avoid breathing in vapor or allowing contact with skin or eyes.

In Canada, construct all combustion-air and vent pipes for this unit of CSA or ULC listed schedule - 40 PVC, PVC-DWV or ABSDWV pipe and pipe cement. SDR pipe is NOT approved in Canada.

In direct vent (2-pipe) systems, combustion air and vent pipes must terminate together in same atmospheric pressure zone, either through roof or sidewall (roof termination preferred), using accessory termination kit. See Table 8 for required clearances.

In non-direct vent (1-pipe) system, vent pipe termination must be installed with adequate clearances to building openings and equipment to comply with national and local codes. See Table 9 for required clearances.

⚠ WARNING

CARBON MONOXIDE POISONING HAZARD

Failure to follow this warning could result in property damage, personal injury, or death.

All combustion-air and vent pipes must be airtight and watertight. Pipes must also terminate exactly as shown in Fig. 42 for direct vent (2-pipe) system and Fig. 43 for non-direct vent (1-pipe) system.

An abandoned masonry chimney may be used as a raceway for properly insulated and supported combustion-air (when applicable) and vent pipes. Each furnace must have its own set of combustion-air and vent pipes and be terminated individually, as shown in Fig. 42 for Direct Vent (2-Pipe) system and Fig. 43 for Non-Direct Vent (1-Pipe) system.

A furnace shall not be connected to a chimney flue serving a separate appliance designed to burn solid fuel.

Other gas appliances with their own venting system may also use the abandoned chimney as a raceway providing it is permitted by local code, the current edition of the National Fuel Gas Code and the vent or liner manufacturer's installation instructions. Care must be taken to prevent the exhaust gases from one appliance from contaminating the combustion air of other gas appliances.

⚠ CAUTION

UNIT MAY NOT OPERATE

Failure to follow this caution may result in intermittent unit operation.

When vent pipe is exposed to temperatures below freezing,such as when it passes through an unheated space or when a chimney is used as a raceway, pipe must be insulated as shown in Table 10 with Armaflex-type insulation.

Furnace combustion air and vent pipe connections are sized for 2-in. (51 mm) pipe. Any pipe size change should be made outside furnace casing in vertical pipe. The transition has to be made as close to the furnace as reasonably possible.

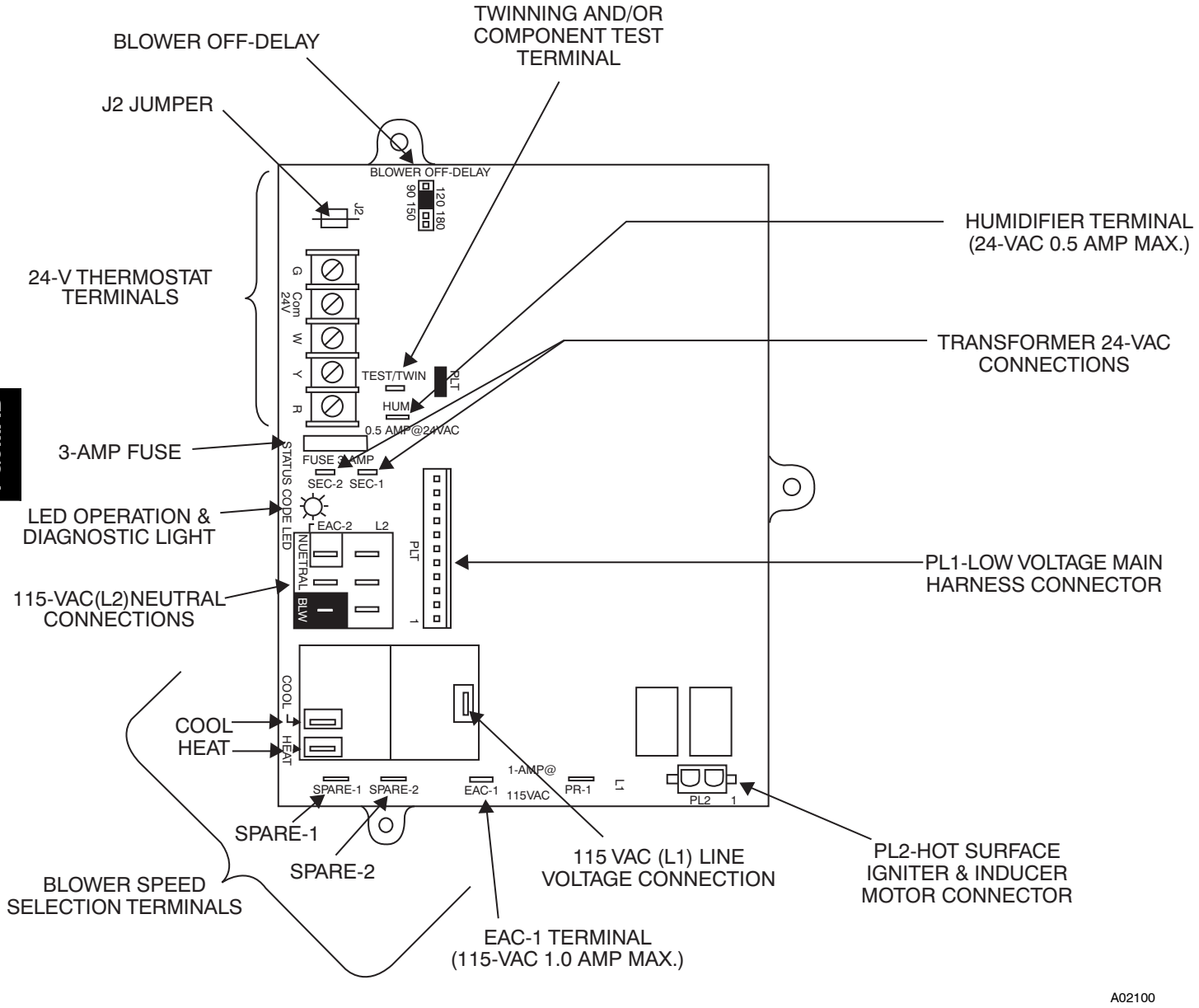

Fig. 34 - Control Board

Table 7 – Approved Combustion-Air and Vent Pipe, Fitting and Cement Materials

ASTM SPECIFICATION (MARKED ON MATERIAL)	MATERIAL	PIPE	FITTINGS	SOLVENT CEMENT AND PRIMERS	DESCRIPTION
D1527	ABS	Pipe	—	—	Schedule–40
D1785	PVC	Pipe	—	—	Schedule–40
D2235	For ABS	—	—	Solvent Cement	For ABS
D2241	PVC	Pipe	—	—	SDR–21 & SDR–26
D2466	PVC	—	Fittings	—	Schedule–40
D2468	ABS	—	Fittings	—	Schedule–40
D2564	For PVC	—	—	Solvent Cement	For PVC
D2661	ABS	Pipe	Fittings	—	DWV at Schedule–40 IPS sizes
D2665	PVC	Pipe	Fittings	—	DWV
F438	CPVC	—	Fittings	—	Schedule–40
F441	CPVC	Pipe	—	—	Schedule–40
F442	CPVC	Pipe	—	—	SDR
F493	For CPVC	—	—	Solvent Cement	For CPVC
F628	ABS	Pipe	—	—	Cellular Core DWV at Schedule–40 IPS sizes
F656	For PVC	—	—	Primer	For PVC
F891	PVC	Pipe	—	—	Cellular Core Schedule–40 & DWV

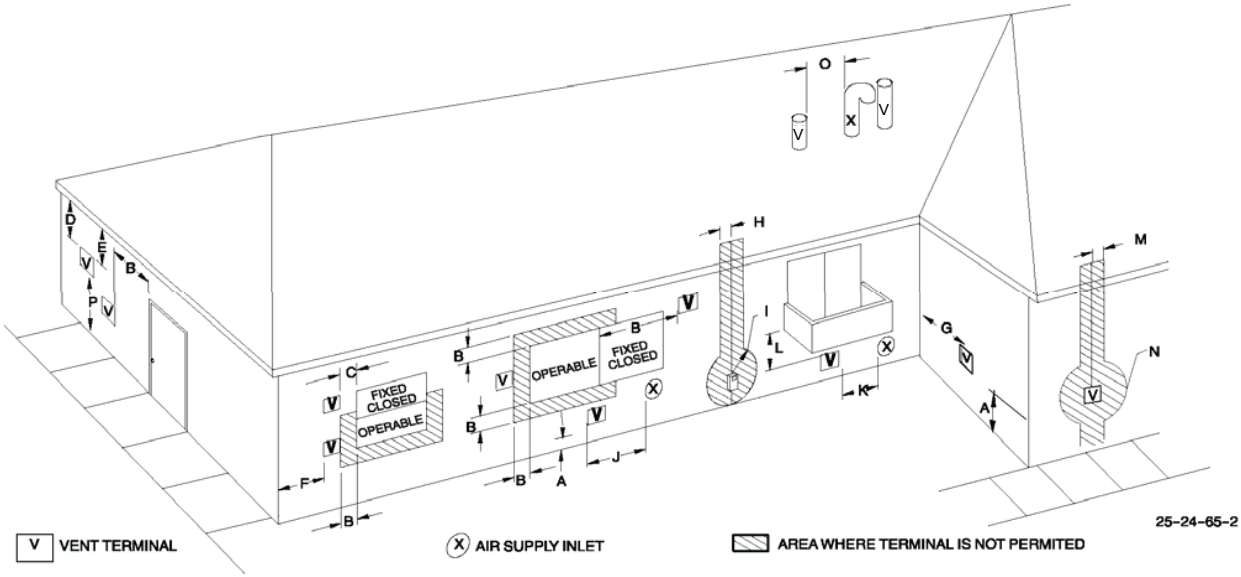

Item	Clearance Description	Canadian Installation (1)	U.S. Installation (2)
A	Clearance above grade, veranda, porch, deck, balcony, or anticipated snow level	12 inches(30 cm) #	12 inches (30 cm)
B	Clearance to a window or door that may be opened	12 inches (30 cm) for appliances > 10,000 Btuh (3 kW) and ≤ 100,000 Btuh (30 kW), 36 inches (91 cm) for appliances > 100,000 Btuh (30 kW)	9 inches (23 cm) for appliances > 10,000 Btuh (3kW) and ≤ 50,000 Btuh (15kW), 12 inches (30cm) for appliances > 50,000 Btuh (15kW)
C	Clearance to a permanently closed window	*	*
D	Vertical clearance to a ventilated soffit located above the terminal within a horizontal distance of 2 feet(61cm) from the centerline of the terminal	*	*
E	Clearance to an unventilated soffit	*	*
F	Clearance to an outside corner	*	*
G	Clearance to an inside corner	*	*
H	Clearance to each side of the centerline extended above electrical meter or gas service regulator assembly	3 feet (91 cm) within 15 feet (4.5 m) above the meter/regulator assembly	3 feet (91 cm) within 15 feet(4.5 m) above the meter/regulator assembly
I	Clearance to service regulator vent outlet	3 feet (91 cm)	*
J	Clearance to non-mechanical air supply inlet to building or the combustion air inlet to any other appliance	12 inches (30 cm) for applieances >10,000 Btuh(3 kW) and ≤ 100,000 Btuh(30kW), 36 inches (91cm) for appliances > 100,000 Btuh(30kW)	9 inches (23 cm) for appliances > 10,000 Btuh (3kW) and ≤ 50,000 Btuh (15kW), 12 inches (30cm) for appliances > 50,000 Btuh (15kW)
K	Clearance to a mechanical air supply inlet	6 feet (1.83 m)	3 feet(91 cm) above if within 10 feet (3m)horizontally
L	Clearance under a veranda, porch, deck, or balcony	12 inches(30 cm) +	*
M	Clearance to each side of the centerline extended above or below vent terminal of the furnace to a dryer or water heater vent, or other appliance's direct vent intake or exhaust.	12 inches (30 cm)	12 inches (30 cm)
N	Clearance to the vent terminal of a dryer vent, water heater vent, or other appliances direct vent intake or exhaust.	3 feet (91 cm)	3 feet (91 cm)
O	Clearance from a plumbing vent stack	3 feet (91 cm)	3 feet (91 cm)
P	Clearance above paved sidewalk or paved driveway located on public property	7 feet (2.13m)**	*

(1.) In accordance with the current CSA B149.1, Natural Gas and Propane Installation Code

(2.) In accordance with the current ANSI Z223.1/NFPA 54, National Fuel Gas Code

18 ˝ (46 cm) above roof surface

+ Permitted only if veranda, porch, deck, or balcony is fully open on a minimum of two sides beneath the floor.

* For clearances not specified in ANSI Z223.1/NFPA 54 or CSA B149.1, clearances shall be in accordance with local installation codes and the requirements of the gas supplier and the manufacturer's installation instructions

** A vent shall not terminate above a sidewalk or paved driveway that is located between two single family dwellings and serves both dwellings.

Notes:

1. The vent for this appliance shall not terminate
   a. Over public walkways; or
   b. Near soffit vents or crawl space vents or other areas where condensate or vapor could create a nusaince or hazard or property damage; or
   c. Where condensate vapor could cause damage or could be detrimental to the operation of regulators, relief valves, or other equipment.
2. When locating vent terminations, consideration must be given to prevailing winds, location, and other conditions which may cause recirculation of the combustion products of adjacent vents. Recirculation can cause poor combustion, inlet condensate problems, and accelerated corrosion of the heat exchangers.
3. Avoid venting under a deck or large overhang. Recirculation could occur and cause performance or system problems.

A08600

Table 8 – Direct Vent Termination Clearance

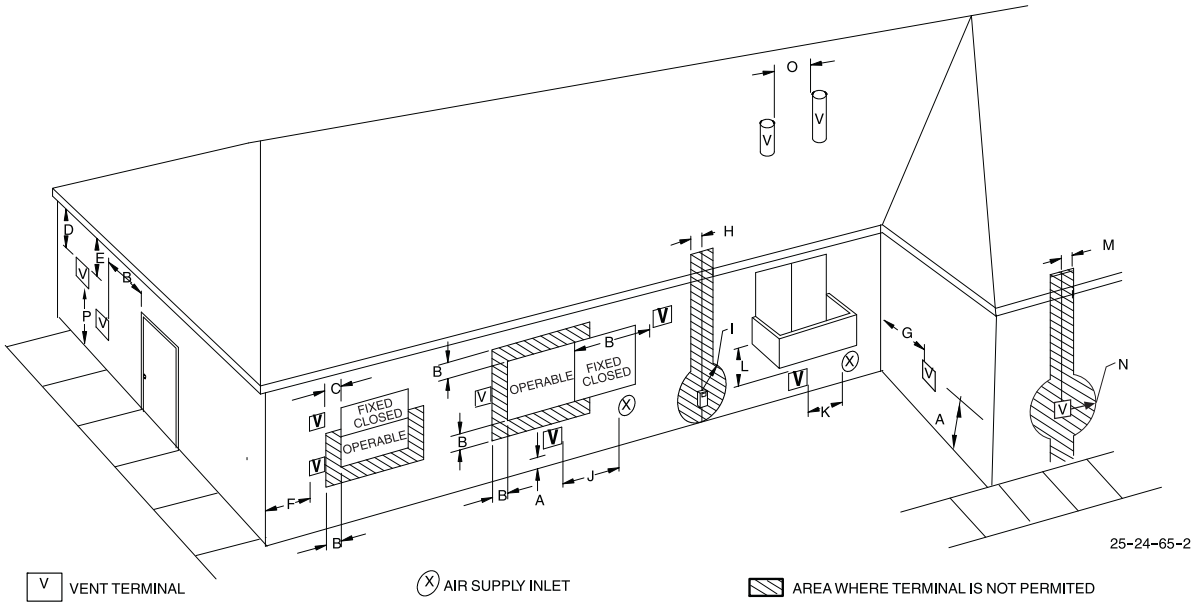

Item	Clearance Descriptions	Canadian Installation (1)	U.S. Installation (2)
A	Clearance above grade, veranda, porch, deck, balcony, or anticipated snow level	12 inches (30cm) #	12 inches (30 cm)
B	Clearance to a window or door that may be opened	6 inches (15 cm) for appliances ≤ 10,000 Btuh (3 kW) 12 inches (30 cm) for appliances > 10,000 Btuh (3 kW0) and ≤ 100,000 Btuh (30 kW), 36 inches (91 cm) for appliances > 100,000 Btuh (30 kW)	4 feet(1.2 m) below or to the side of the opening. 1 foot(30 cm) above the opening.
C	Clearance to a permanently closed window	*	*
D	Vertical clearance to a ventilated soffit located above the terminal within a horizontal distance of 2´(61cm) from the centerline of the terminal	*	*
E	Clearance to an unventilated soffit	*	*
F	Clearance to an outside corner	*	*
G	Clearance to an inside corner	*	*
H	Clearance to each side of the centerline extended above electrical meter or gas service regulator assembly	3 feet (91 cm) within 15 feet(4.5 m) above the meter/regulator assembly	3 feet (91 cm) within 15 feet (4.5 m) above the meter/regulator assembly
I	Clearance to service regulator vent outlet	3 feet (91 cm)	*
J	Clearance to non-mechanical air supply inlet to building or the combustion air inlet to any other appliance	6 inches (15 cm) for appliances ≤ 10,000 Btuh (3 kW) 12 inches (30 cm) for appliances > 10,000 Btuh (3 kW0) and ≤ 100,000 Btuh (30 kW) 36 inches (91 cm) for appliances > 100,000 Btuh (30 kW)	4 feet(1.2 m) below or to the side of opening: 1 foot (30 cm) above opening.
K	Clearance to a mechanical air supply inlet	6 feet(1.83 m)	3 feet(91 cm) above if within 10 feet (3 m horizontally)
L	Clearance under a veranda, porch, deck, or balcony	12 inches(30 cm) +	*
M	Clearance to each side of the centerline extended above or below vent terminal of the furnace to a dryer or water heater vent, or other appliance's direct vent intake or exhaust.	*	*
N	Clearance to the vent terminal of a dryer vent, water heater vent, or other appliances direct vent intake or exhaust.	*	*
O	Clearance from a plumbing vent stack	*	*
P	Clearance above paved sidewalk or paved driveway located on public property	7 feet (2.13m)**	7 feet (2.13m)

(1.) In accordance with the current CSA B149.1, Natural Gas and Propane Installation Code

(2.) In accordance with the current ANSI Z223.1/NFPA 54, National Fuel Gas Code

18˝ (46 cm) above roof surface

+ Permitted only if veranda, porch, deck, or balcony is fully open on a minimum of two sides beneath the floor.

* For clearances not specified in ANSI Z223.1/NFPA 54 or CSA B149.1, clearances shall be in accordance with local installation codes and the requirements of the gas supplier and the Manufacturer's installation instructions.

** A vent shall not terminate above a sidewalk or paved driveway that is located between two single family dwellings and serves both dwellings.

Notes:

1. The vent for this appliance shall not terminate
   a. Over public walkways; or
   b. Near soffit vents or crawl space vents or other areas where condensate or vapor could create a nusiance or hazard or property damage; or
   c. Where condensate vapor could cause damage or could be detrimental to the operation of regulators, relief valves, or other equipment.
2. When locating vent terminations, consideration must be given to prevailing winds, location, and other conditions which may cause recirculation of the combustiob products of adjacent vents. Recirculation can cause poor combustion, inlet condensate problems, and accelerated corrosion of the heat exchangers.
3. Avoid venting under a deck or large overhang. Recirculation could occur and cause performance or system problems.

A08601

Table 9 – Other than Direct Vent Termination Clearance

Table 10 – Maximum Allowable Exposed Vent Pipe Length - Ft. (M) With and Without Insulation in Winter Design Temperature Ambient*

FURNACE SIZE	WINTER DESIGN TEMPERATURE °F (°C)	MAX PIPE DIAMETER IN (mm)	WITHOUT INSULATION FT (M)	WITH 3/8–IN. (10 mm) OR THICKER INSULATION† FT (M)
040	20 (−7)	1.5 (38)	51 (16)	70 (21)
	0 (−18)	1.5 (38)	28 (9)	70 (21)
	−20 (−29)	1.5 (38)	16 (5)	70 (21)
	20 (−7)	2 (51)	45 (14)	70 (21)
	0 (−18)	2 (51)	22 (7)	70 (21)
	−20 (−29)	2 (51)	10 (3)	58 (18)
060	20 (−7)	2 (51)	65 (20)	70 (21)
	0 (−18)	2 (51)	35 (11)	70 (21)
	−20 (−29)	2 (51)	20 (6)	70 (21)
080	20 (−7)	2 (51)	55 (17)	55 (17)
	0 (−18)	2 (51)	48 (15)	55 (17)
	−20 (−29)	2 (51)	30 (9)	55 (17)
	20 (−7)	2.5 (64)	70 (21)	70 (21)
	0 (−18)	2.5 (64)	47 (14)	70 (21)
	−20 (−29)	2.5 (64)	28 (9)	70 (21)
100	20 (−7)	2.5 (64)	40 (12)	40 (12)
	0 (−18)	2.5 (64)	40 (12)	40 (12)
	−20 (−29)	2.5 (64)	38 (12)	40 (12)
	20 (−7)	3 (76)	70 (21)	70 (21)
	0 (−18)	3 (76)	50 (15)	70 (21)
	−20 (−29)	3 (76)	28 (9)	70 (21)
120	20 (−7)	3 (76)	70 (21)	70 (21)
	0 (−18)	3 (76)	61 (19)	70 (21)
	−20 (−29)	3 (76)	37 (11)	70 (21)
	20 (−7)	4 (102)	70 (21)	70 (21)
	0 (−18)	4 (102)	48 (15)	70 (21)
	−20 (−29)	4 (102)	23 (7)	70 (21)
140	20 (−7)	3 (76)	60 (18)	60 (18)
	0 (−18)	3 (76)	60 (18)	60 (18)
	−20 (−29)	3 (76)	44 (13)	60 (18)
	20 (−7)	4 (102)	70 (21)	70 (21)
	0 (−18)	4 (102)	57 (17)	70 (21)
	−20 (−29)	4 (102)	30 (9)	70 (21)

* Pipe length (ft) specified for maximum pipe lengths located in unconditioned spaces. Pipes located in unconditioned space cannot exceed total allowable pipe length as specified in Table 10.

† Insulation thickness based on R value of 3.5 per in.

COMBUSTION AIR PIPE

General

Furnace combustion-air connection must be attached as shown in Fig. 35. Combustion-air intake housing plug may need to be relocated in some applications.

For Non-Direct Vent (1-Pipe) system, combustion-air must terminate outside of furnace casing with 1 elbow. Orient elbow so that its opening faces down for upflow or downflow applications. Orient elbow so that its opening faces sideways (left or right) for horizontal left or horizontal right applications (See Fig. 35.) Maintain a 3-in minimum clearance between the opening of the combustion-air inlet pipe and any object.

⚠ CAUTION

UNIT CORROSION HAZARD

Excessive exposure to contaminated combustion air may result in safety and performance related problems.

Combustion air must not be taken from inside structure because inside air is frequently contaminated by halogens, which include fluorides, chlorides, bromides, and iodides. These elements are found in aerosols, detergents, bleaches, cleaning solvents, salts, air fresheners, adhesives, paint, and other household products. Locate combustion-air inlet as far as possible from swimming pool and swimming pool pump house.

pipe. Pick the larger of these 2 pipe diameters and use this diameter for both combustion-air and vent pipes.

NOTE: All pipe joints must be cemented except attachment of the combustion-air pipe to the inlet housing connection, since it may be necessary to remove the pipe for servicing.

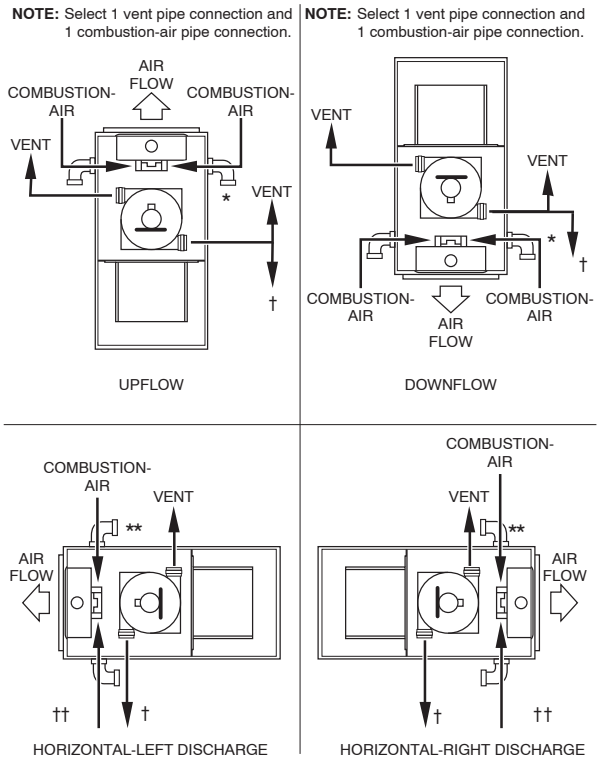

* For Non-Direct Vent (1-Pipe) system, orient elbow so that its opening faces down.

** For Non-Direct Vent (1-Pipe) system, orient elbow so that its opening faces sideways.

† An external trap kit (see furnace product data sheet) must be used.

†† Bottom combustion-air not allowed for non-direct vent

A05092

Fig. 35 - Combustion-Air and Vent Pipe Connections

Assembly of Combustion Air Pipe (Non-Direct Vent/1-Pipe System ONLY)

1. Permanently install perforated disk assembly (factory-supplied in loose parts bag) in combustion-air elbow using RTV or by cementing, as shown in Fig. 36. For 120,000 Btuh size units only: separate the 2 halves of perforated disk assembly and use only the shouldered disk half.
2. Determine the length of straight portion of combustion-air inlet pipe from Fig. 36.
3. Cut field-supplied 2-in. (51 mm) diameter PVC pipe to length as determined per Fig. 36.
4. Permanently attach elbow/perforated disk assembly to straight portion of pipe using RTV or by cementing as shown in Fig. 36.

Assembly of Combustion Air Pipe (Direct Vent - 2-Pipe System ONLY)

1. Using Table 11, individually determine the diameter of the combustion air and vent pipe allowed. If different, pick the larger of these two diameters and use this diameter for both combustion-air and vent pipes.
2. When installing vent systems of short pipe length, use the smallest allowable pipe diameter. Do not use pipe size greater than required or incomplete combustion, flame disturbance, or flame sense lockout may occur.

NOTE: Do not count elbows or pipe sections in terminations or within furnace (All elbows shown in Fig. 42 and Fig. 43 are not to be counted).

NOTE: The 60,000 model includes an inducer outlet restrictor in the loose parts bag that must be installed for certain vent system configurations. Referring to Table 12, locate the altitude for the installation. Discard the restrictor if the vent length is greater than that shown in Table 12; install the restrictor if the vent length is less than or equal. Refer to Fig. 37 for positioning of the restrictor in the inducer outlet. The restrictor is to be trapped between the vent pipe and inducer outlet. Certain installations may require removal of the coupling for easier installation of the inducer outlet restrictor.

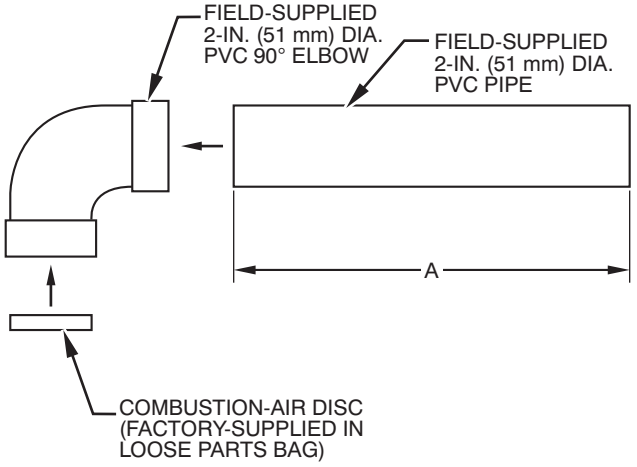

A96211

Length of Straight Pipe Portion of Combustion-Air Inlet Pipe Assembly - In. (mm)

CASING WIDTH	A
17–1/2 (445)	8–1/2 ±1/2 (216 ± 13)
21(533)	10–1/2 ±1/2 (267 ± 13)
24–1/2 (622)	12 ±1/2 (318 ± 13)

Fig. 36 - Combustion-Air Inlet Pipe Assembly

⚠ CAUTION

UNIT MAY NOT OPERATE

Failure to follow this caution may result in incomplete combustion, flame disturbance, or flame sense lockout.

When installing combustion air and vent system of short pipe length, the smallest allowable pipe diameter must be used.

NOTE: A 2-in. (51 mm) diameter pipe must be used within furnace casing. Make all pipe diameter transitions outside furnace casing per Fig. 39.

3. If required per Table 11, insert perforated disk assembly (factory-supplied in loose parts bag) in intake housing where combustion air pipe will be connected. If half disk set is required, install only shouldered disk half.

Attachment of Combustion Air Pipe

1. Determine location of combustion air intake pipe connection to combustion air intake housing as shown in Fig. 35 for application.
2. Reposition combustion air intake housing plug fitting in appropriate unused intake housing connection.
3. Install pipe support (factory-supplied in loose parts bag) into selected furnace casing combustion-air pipe hole. Pipe support should be positioned at bottom of casing hole.
4. Insert assembled combustion air inlet pipe into intake housing as shown in Fig. 35.

5. Drill a 1/8-in. (3 mm) hole in 2-in. (51 mm) combustion air pipe using the hole in intake housing as a guide.
6. Install a field-supplied No. 6 or No. 8 sheet metal screw into combustion air pipe.
7. Install casing hole filler cap (factory-supplied in loose parts bag) in unused combustion air pipe casing hole.

NOTE: Do not attach combustion air intake pipe permanently to combustion air intake housings since it may be necessary to remove pipe for service of igniter or flame sensor.

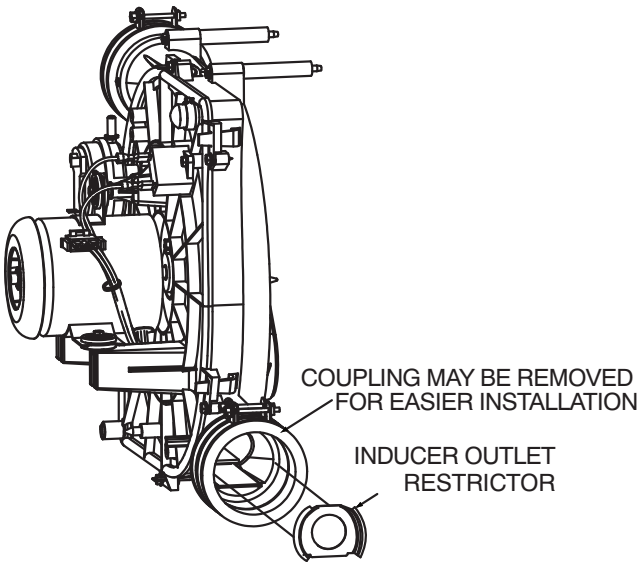

Fig. 37 - Outlet Restrictor Installation
60,000 BTUH Models only. See Table 12.

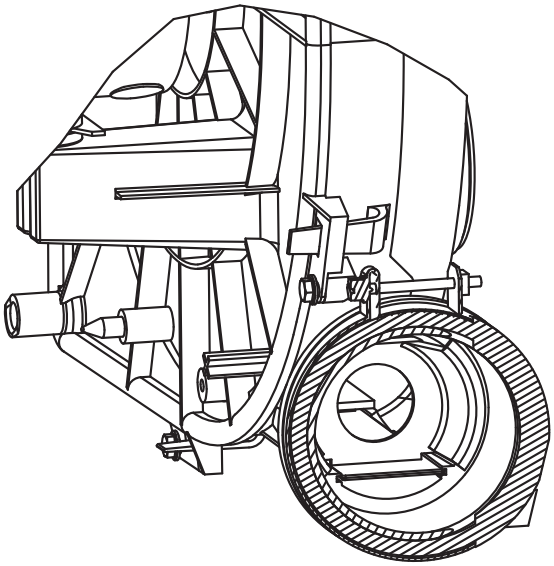

Fig. 38 - Illustration of an Installed Outlet Restrictor
60,000 BTUH Models only. See Table 12.

PG9MAB

Table 11 – Maximum Allowable Pipe Length - Ft (M)

ALTITUDE FT (M)	UNIT SIZE (BTUH)	DIRECT VENT (2-PIPE) ONLY		NON-DIRECT VENT (1-PIPE) ONLY	NUMBER OF 90° ELBOWS					
		TERMINATION TYPE	PIPE DIA IN. (mm)*	PIPE DIA IN. (mm)*	1	2	3	4	5	6
0 to 2000 (0 to 610)	40,000	2 Pipe or 2-in Concentric	1 (25)	1 (25)	5 (1.5)	NA	NA	NA	NA	NA
			1-1/2 (38)	1-1/2 (38)	70 (21.3)	70 (21.3)	65 (19.8)	60 (18.3)	60 (18.3)	55 (16.8)
			2 (51)	2 (51)	70 (21.3)	70 (21.3)	70 (21.3)	70 (21.3)	70 (21.3)	70 (21.3)
	60,000	2 Pipe or 2-in Concentric	1-1/2 (38)	1-1/2 (38)	20 (6.1)	15 (4.6)	10 (3.0)	5 (1.5)	NA	NA
			2 (51)	2 (51)	70 (21.3)	70 (21.3)	70 (21.3)	70 (21.3)	70 (21.3)	70 (21.3)
	80,000	2 Pipe or 2-in Concentric	1-1/2 (38)	1-1/2 (38)	10 (3.0)	NA	NA	NA	NA	NA
			2 (51)	2 (51)	55 (16.8)	50 (15.2)	35 (10.7)	30 (9.1)	30 (9.1)	20 (6.1)
			2-1/2 (64)	2-1/2 (64)	70 (21.3)	70 (21.3)	70 (21.3)	70 (21.3)	70 (21.3)	70 (21.3)
	100,000	2 Pipe or 3-in Concentric	2 (51)	2 (51)	5 (1.5)	NA	NA	NA	NA	NA
			2-1/2 (64)	2-1/2 (64)	40 (12.2)	30 (9.1)	20 (6.1)	20 (6.1)	10 (3.0)	NA
			3 (76)	3 (76)	70 (21.3)	70 (21.3)	70 (21.3)	70 (21.3)	70 (21.3)	70 (21.3)
	120,000	2 Pipe or 3-in. Concentric	2-1/2 (64) one disk	2-1/2 (64)	10 (3.0)	NA	NA	NA	NA	NA
			3 (76)†	NA	45 (13.7)	40 (12.2)	35 (10.7)	30 (9.1)	25 (7.6)	20 (6.1)
			3 (76) † no disk	3 (76)†	70 (21.3)	70 (21.3)	70 (21.3)	70 (21.3)	70 (21.3)	70 (21.3)
	140,000	2 Pipe or 3-in. Concentric	2-1/2 (64) one disk	NA	5 (1.5)	NA	NA	NA	NA	NA
			3 (76)†	NA	40 (12.1)	35 (10.6)	30 (9.1)	25 (7.6)	20 (6.1)	15 (4.6)
			3 (76) † no disk	NA	60 (18.3)	56 (17.0)	52 (15.8)	48 (14.6)	44 (13.4)	40 (12.2)
			4 (102) † no disk	NA	70 (21.3)	70 (21.3)	70 (21.3)	70 (21.3)	70 (21.3)	70 (21.3)

ALTITUDE FT (M)	UNIT SIZE (BTUH)	DIRECT VENT (2-PIPE) ONLY		NON-DIRECT VENT (1-PIPE) ONLY	NUMBER OF 90° ELBOWS					
		TERMINATION TYPE	PIPE DIA IN. (mm)*	PIPE DIA IN. (mm)*	1	2	3	4	5	6
2001 to 3000 (610 to 914)	40,000	2 Pipe or 2-in Concentric	1-1/2 (38)	1-1/2 (38)	67 (20.4)	62 (18.9)	57 (17.4)	52 (15.8)	52 (15.8)	47 (14.3)
			2 (51)	2 (51)	70 (21.3)	70 (21.3)	70 (21.3)	70 (21.3)	70 (21.3)	70 (21.3)
	60,000	2 Pipe or 2-in Concentric	1-1/2 (38)	1-1/2 (38)	17 (5.2)	12 (3.7)	7 (2.1)	NA	NA	NA
			2 (51)	2 (51)	70 (21.3)	67 (20.4)	66 (20.1)	61 (18.6)	61 (18.6)	61 (18.6)
	80,000	2 Pipe or 2-in Concentric	2 (51)	2 (51)	49 (14.9)	44 (13.4)	30 (9.1)	25 (7.6)	25 (7.6)	15 (4.6)
			2-1/2 (64)	2-1/2 (64)	70 (21.3)	70 (21.3)	70 (21.3)	70 (21.3)	70 (21.3)	70 (21.3)
	100,000	2 Pipe or 3-in Concentric	2-1/2 (64)	2-1/2 (64)	35 (10.7)	26 (7.9)	16 (4.9)	16 (4.9)	6 (1.8)	NA
			3 (76)	3 (76)	70 (21.3)	70 (21.3)	70 (21.3)	70 (21.3)	66 (20.1)	61 (18.6)
	120,000	2 Pipe or 3-in. Concentric	3 (76)	NA	14 (4.3)	9 (2.7)	NA	NA	NA	NA
			NA	3 (76)†	63 (19.2)	62 (18.9)	62 (18.9)	61 (18.6)	61 (18.6)	61 (18.6)
			3 (76)† no disk	NA	70 (21.3)	70 (21.3)	63 (19.2)	56 (17.1)	50 (15.2)	43 (13.1)
			4 (102)† no disk	4 (102)† no disk	70 (21.3)	70 (21.3)	70 (21.3)	70 (21.3)	70 (21.3)	70 (21.3)
	140,000	2 Pipe or 3-in. Concentric	3 (76) one disk†	NA	20 (6.1)	15 (4.6)	10 (3.0)	5 (1.5)	NA	NA
			3 (76)† no disk	NA	39 (11.8)	35 (10.6)	31 (11.9)	27 (8.2)	23 (7.0)	19 (5.8)
			4 (102)† no disk	NA	70 (21.3)	70 (21.3)	70 (21.3)	70 (21.3)	70 (21.3)	70 (21.3)

See notes at end of table.

Table 11—Maximum Allowable Pipe Length - Ft (M) (Continued)

ALTITUDE FT (M)	UNIT SIZE (BTUH)	DIRECT VENT (2-PIPE) ONLY		NON-DIRECT VENT (1-PIPE) ONLY	NUMBER OF 90° ELBOWS					
		TERMINATION TYPE	PIPE DIA – IN (mm)*	PIPE DIA – IN (mm)*	1	2	3	4	5	6
3001 to 4000 (914 to 1219)	40,000	2 Pipe or 2-in Concentric	1-1/2 (38)	1-1/2 (38)	64 (19.5)	59 (18.0)	54 (16.5)	49 (14.9)	48 (14.6)	43 (13.1)
			2 (51)	2 (51)	70 (21.3)	70 (21.3)	70 (21.3)	70 (21.3)	70 (21.3)	70 (21.3)
	60,000	2 Pipe or 2-in Concentric	1-1/2 (38)	1-1/2 (38)	16 (4.9)	11 (3.4)	6 (1.8)	NA	NA	NA
			2 (51)	2 (51)	68 (20.7)	63 (19.2)	62 (18.9)	57 (17.4)	57 (17.4)	56 (17.1)
	80,000	2 Pipe or 2-in Concentric	2 (51)	2 (51)	46 (14.0)	41 (12.5)	28 (8.5)	23 (7.0)	22 (6.7)	13 (4.0)
			2-1/2 (64)	2-1/2 (64)	70 (21.3)	70 (21.3)	70 (21.3)	70 (21.3)	70 (21.3)	70 (21.3)
	100,000	2 Pipe or 3-in Concentric	2-1/2 (64)	2-1/2 (64)	33 (10.1)	24 (7.3)	15 (4.6)	14 (4.3)	5 (1.5)	NA
			3 (76)	3 (76)	70 (21.3)	70 (21.3)	70 (21.3)	66 (20.1)	61 (18.6)	56 (17.1)
	120,000	2 Pipe or 3-in. Concentric	3 (76)† no disk	NA	65 (19.8)	58 (17.7)	51 (15.5)	44 (13.4)	38 (11.6)	31 (9.4)
			NA	3 (76)†	59 (18.0)	59 (18.0)	58 (17.7)	57 (17.4)	57 (17.4)	56 (17.1)
		4† no disk	4 (102)† no disk	4 (102) † no disk	70 (21.3)	70 (21.3)	70 (21.3)	70 (21.3)	70 (21.3)	70 (21.3)
	140,000	2 Pipe or 3-in. Concentric	3 (76) one disk†	NA	11 (3.4)	6 (1.8)	NA	NA	NA	NA
			3 (76)† no disk	NA	30 (9.1)	26 (7.9)	22 (6.7)	18 (5.5)	14 (4.3)	10 (3.0)
			4 (102)† no disk	NA	70 (21.3)	70 (21.3)	70 (21.3)	70 (21.3)	70 (21.3)	70 (21.3)
ALTITUDE FT (M)	UNIT SIZE (BTUH)	DIRECT VENT (2-PIPE) ONLY		NON-DIRECT VENT (1-PIPE) ONLY	NUMBER OF 90° ELBOWS					
		TERMINATION TYPE	PIPE DIA IN. (mm)*	PIPE DIA IN. (mm)*	1	2	3	4	5	6
4001 to 5000‡ (1219 to 1524)	40,000	2 Pipe or 2-in Concentric	1-1/2 (38)	1-1/2 (38)	60 (18.3)	55 (16.8)	50 (15.2)	45 (13.7)	44 (13.4)	39 (11.9)
			2 (51)	2 (51)	70 (21.3)	70 (21.3)	70 (21.3)	70 (21.3)	70 (21.3)	70 (21.3)
	60,000	2 Pipe or 2-in Concentric	1-1/2 (38)	1-1/2 (38)	15 (4.6)	10 (3.0)	5 (1.5)	NA	NA	NA
			2 (51)	2 (51)	64 (19.5)	59 (18.0)	58 (17.7)	53 (16.2)	52 (15.8)	52 (15.8)
	80,000	2 Pipe or 2-in Concentric	2 (51)	2 (51)	44 (13.4)	39 (11.9)	26 (7.9)	21 (6.4)	20 (6.1)	11 (3.4)
			2-1/2 (64)	2-1/2 (64)	70 (21.3)	70 (21.3)	70 (21.3)	70 (21.3)	70 (21.3)	70 (21.3)
	100,000	2 Pipe or 3-in Concentric	2-1/2 (64)	2-1/2 (64)	31 (9.4)	22 (6.7)	13 (4.0)	12 (3.7)	NA	NA
			3 (76)	3 (76)	70 (21.3)	70 (21.3)	67 (20.4)	62 (18.9)	57 (17.4)	52 (15.8)
	120,000	2 Pipe or 3-in. Concentric	3 (76)† no disk	NA	53 (16.2)	46 (14.0)	40 (12.2)	33 (10.1)	26 (7.9)	20 (6.1)
			NA	3 (76)†	56 (17.1)	55 (16.8)	54 (16.5)	53 (16.2)	52 (15.8)	52 (15.8)
			4 (102)† no disk	4 (102)† no disk	70 (21.3)	70 (21.3)	70 (21.3)	70 (21.3)	70 (21.3)	70 (21.3)
	140,000	2 Pipe or 3-in. Concentric	3 (76)† no disk	NA	21 (6.4)	17 (5.1)	13 (3.9)	9 (2.7)	5 (1.5)	NA
			4 (102)† no disk	NA	69 (21.0)	64 (19.5)	59 (17.9)	54 (16.4)	49 (15.0)	44 (13.4)

See notes at end of table.

PG9MAB

Table 11—Maximum Allowable Pipe Length - Ft (M) (Continued)

ALTITUDE FT (M)	UNIT SIZE (BTUH)	DIRECT VENT (2-PIPE) ONLY		NON-DIRECT VENT (1-PIPE) ONLY	NUMBER OF 90° ELBOWS					
		TERMINATION TYPE	PIPE DIA IN. (mm)*	PIPE DIA IN. (mm)*	1	2	3	4	5	6
5001 to 6000‡ (1524 to 1829)	40,000	2 Pipe or 2-in Concentric	1-1/2 (38)	1-1/2 (38)	57 (17.4)	52 (15.8)	47 (14.3)	42 (12.8)	40 (12.2)	35 (10.7)
			2 (51)	2 (51)	70 (21.3)	70 (21.3)	70 (21.3)	70 (21.3)	70 (21.3)	70 (21.3)
	60,000	2 Pipe or 2-in Concentric	1-1/2 (38)	1-1/2 (38)	14 (4.3)	9 (2.7)	NA	NA	NA	NA
			2 (51)	2 (51)	60 (18.3)	55 (16.8)	54 (16.5)	49 (14.9)	48 (14.6)	47 (14.3)
	80,000	2 Pipe or 2-in Concentric	2 (51)	2 (51)	41 (12.5)	36 (11.0)	23 (7.0)	18 (5.5)	17 (5.2)	8 (2.4)
			2-1/2 (64)	2-1/2 (64)	70 (21.3)	70 (21.3)	70 (21.3)	70 (21.3)	70 (21.3)	70 (21.3)
	100,000	2 Pipe or 3-in Concentric	2-1/2 (64)	2-1/2 (64)	29 (8.8)	21 (6.4)	12 (3.7)	11 (3.4)	NA	NA
			3 (76)	3 (76)	70 (21.3)	67 (20.4)	62 (18.9)	57 (17.4)	52 (15.8)	47 (14.3)
	120,000	2 Pipe or 3-in. Concentric	3 (76)† no disk	NA	42 (12.8)	35 (10.7)	29 (8.8)	22 (6.7)	15 (4.6)	9 (2.7)
			NA	3 (76)†	53 (16.2)	52 (15.8)	50 (15.2)	49 (14.9)	48 (14.6)	47 (14.3)
			4 (102)† no disk	4 (102)† no disk	70 (21.3)	70 (21.3)	70 (21.3)	70 (21.3)	70 (21.3)	70 (21.3)
	140,000	2 Pipe or 3-in. Concentric	3 (76)† no disk	NA	12 (3.6)	8 (2.4)	NA	NA	NA	NA
			4 (102)† no disk	NA	42 (12.8)	37 (11.2)	32 (9.7)	27 (8.2)	22 (6.7)	17 (5.1)
ALTITUDE FT (M)	UNIT SIZE (BTUH)	DIRECT VENT (2-PIPE) ONLY		NON-DIRECT VENT (1-PIPE) ONLY	NUMBER OF 90° ELBOWS					
		TERMINATION TYPE	PIPE DIA IN. (mm)*	PIPE DIA IN. (mm)*	1	2	3	4	5	6
6001 to 7000‡ (1829 to 2134)	40,000	2 Pipe or 2-in Concentric	1-1/2 (38)	1-1/2 (38)	53 (16.2)	48 (14.6)	43 (13.1	38 (11.6)	37 (11.3)	32 (9.8)
			2 (51)	2 (51)	70 (21.3)	70 (21.3)	68 (20.7)	67 (20.4)	66 (20.1)	64 (19.5)
	60,000	2 Pipe or 2-in Concentric	1-1/2 (38)	1-1/2 (38)	13 (4.0)	8 (2.4)	NA	NA	NA	NA
			2 (51)	2 (51)	57 (17.4)	52 (15.8)	50 (15.2)	45 (13.7)	44 (13.4)	43 (13.1)
	80,000	2 Pipe or 2-in Concentric	2 (51)	2 (51)	38 (11.6)	33 (10.1)	21 (6.4)	16 (4.9)	15 (4.6)	6 (1.8)
			2-1/2 (64)	2-1/2 (64)	70 (21.3)	70 (21.3)	68 (20.7)	67 (20.4)	66 (20.1)	64 (19.5)
	100,000	2 Pipe or 3-in Concentric	2-1/2 (64)	2-1/2 (64)	27 (8.2)	19 (5.8)	10 (3.0)	9 (2.7)	NA	NA
			3 (76)	3 (76)	68 (20.7)	63 (19.2)	58 (17.7)	53 (16.2)	48 (14.6)	43 (13.1)
	120,000	2 Pipe or 3-in. Concentric	3 (76)† no disk	NA	31 (9.4)	24 (7.3)	18 (5.5)	11 (3.4)	NA	NA
			NA	3 (76)†	49 (14.9)	48 (14.6)	47 (14.3)	45 (13.7)	44 (13.4)	43 (13.1)
	140,000	2 Pipe or 3-in. Concentric	4 (102)† no disk	NA	17 (5.1)	12 (3.6)	7 (2.1)	NA	NA	NA

See notes at end of table.

Table 11—Maximum Allowable Pipe Length - Ft (M) (Continued)

ALTITUDE FT (M)	UNIT SIZE (BTUH)	DIRECT VENT (2-PIPE) ONLY		NON-DIRECT VENT (1-PIPE) ONLY	NUMBER OF 90° ELBOWS					
		TERMINATION TYPE	PIPE DIA IN. (mm)*	PIPE DIA IN. (mm)*	1	2	3	4	5	6
7001 to 8000‡ (2134 to 2438)	40,000	2 Pipe or 2-in Concentric	1-1/2 (38)	1-1/2 (38)	49 (14.9)	44 (13.4)	39 (11.9)	34 (10.4)	33 (10.1)	28 (6.5)
			2 (51)	2 (51)	66 (20.1)	65 (19.8)	63 (19.2)	62 (18.9)	60 (18.3)	59 (18.0)
	60,000	2 Pipe or 2-in Concentric	1-1/2 (38)	1-1/2 (38)	12 (3.7)	7 (2.1)	NA	NA	NA	NA
			2 (51)	2 (51)	53 (16.2)	48 (14.6)	46 (14.0)	41 (12.5)	40 (12.2)	38 (11.6)
	80,000	2 Pipe or 2-in Concentric	2 (51)	2 (51)	36 (11.0)	31 (9.4)	19 (5.8)	14 (4.3)	12 (3.7)	NA
			2-1/2 (64)	2-1/2 (64)	66 (20.1)	65 (19.8)	63 (19.2)	62 (18.9)	60 (18.3)	59 (18.0)
	100,000	2 Pipe or 3-in Concentric	2-1/2 (64)	2-1/2 (64)	25 (7.6)	17 (5.2)	8 (2.4)	7 (2.1)	NA	NA
			3 (76)	3 (76)	63 (19.2)	58 (17.7)	53 (16.2)	48 (14.6)	43 (13.1)	38 (11.6)
	120,000	2 Pipe or 3-in. Concentric	3 (76)† no disk	NA	20 (6.1)	13 (4.0)	7 (2.1)	NA	NA	NA
			NA	3 (76)†	46 (14.0)	44 (13.4)	43 (13.1)	41 (12.5)	40 (12.2)	38 (11.6)
			4 (102)† no disk	4 (102)† no disk	61 (18.6)	56 (17.1)	51 (15.5)	46 (14.0)	41 (12.5)	36 (11.0)
	140,000	NA								
ALTITUDE FT (M)	UNIT SIZE (BTUH)	DIRECT VENT (2-PIPE) ONLY		NON-DIRECT VENT (1-PIPE) ONLY	NUMBER OF 90° ELBOWS					
		TERMINATION TYPE	PIPE DIA IN. (mm)*	PIPE DIA IN. (mm)*	1	2	3	4	5	6
8001 to 9000‡ (2438 to 2743)	40,000	2 Pipe or 2-in Concentric	1-1/2 (38)	1-1/2 (38)	46 (14.0)	41 (12.5)	36 (11.0)	31 (9.4)	29 (8.8)	24 (7.3)
			2 (51)	2 (51)	62 (18.9)	60 (18.3)	58 (17.7)	56 (17.1)	55 (16.8)	53 (16.2)
	60,000	2 Pipe or 2-in Concentric	1-1/2 (38)	1-1/2 (38)	11 (3.4)	6 (1.8)	NA	NA	NA	NA
			2 (51)	2 (51)	49 (14.9)	44 (13.4)	42 (12.8)	37 (11.3)	35 (10.7)	34 (10.4)
	80,000	2 Pipe or 2-in Concentric	2 (51)	2 (51)	33 (10.1)	28 (8.5)	17 (5.2)	12 (3.7)	10 (3.0)	NA
			2-1/2 (64)	2-1/2 (64)	62 (18.9)	60 (18.3)	58 (17.7)	56 (17.1)	55 (16.8)	53 (16.2)
	100,000	2 Pipe or 3-in Concentric	2-1/2 (64)	2-1/2 (64)	23 (7.0)	15 (4.6)	7 (2.1)	5 (1.5)	NA	NA
			3 (76)	3 (76)	59 (18.0)	54 (16.5)	49 (14.9)	44 (13.4)	39 (11.9)	34 (10.4)
	120,000	2 Pipe or 3-in. Concentric	3 (76)† no disk	NA	10 (3.0)	NA	NA	NA	NA	NA
			NA	3 (76)†	43 (13.1)	41 (12.5)	39 (11.9)	37 (11.3)	35 (10.7)	34 (10.4)
			4 (102)† no disk	4† no disk	35 (10.7)	30 (9.1)	25 (7.6)	20 (6.1)	15 (4.6)	10 (3.0)
	140,000	NA								

See notes at end of table.

PG9MAB

Table 11—Maximum Allowable Pipe Length - Ft (M) (Continued)

ALTITUDE FT (M)	UNIT SIZE (BTUH)	DIRECT VENT (2-PIPE) ONLY		NON-DIRECT VENT (1-PIPE) ONLY	NUMBER OF 90° ELBOWS					
		TERMINATION TYPE	PIPE DIA IN. (mm)*	PIPE DIA IN. (mm)*	1	2	3	4	5	6
9001 to 10,000‡ (2743 to 3048)	40,000	2 Pipe or 2-in	1-1/2 (38)	1-1/2 (38)	42 (12.8)	37 (11.3)	32 (9.8)	27 (8.2)	25 (7.6)	20 (6.1)
		Concentric	2 (51)	2 (51)	57 (17.4)	55 (16.8)	53 (16.2)	51 (15.5)	49 (14.9)	47 (14.3)
	60,000	2 Pipe or 2-in Concentric	2 (51)	2 (51)	45 (13.7)	40 (12.2)	38 (11.6)	33 (10.1)	31 (9.4)	29 (8.8)
	80,000	2 Pipe or 2-in Concentric	2 (51)	2 (51)	30 (9.1)	25 (7.6)	14 (4.3)	9 (2.7)	7 (2.1)	NA
			2-1/2 (64)	2-1/2 (64)	57 (17.4)	55 (16.8)	53 (16.2)	51 (15.5)	49 (14.9)	47 (14.3)
	100,000	2 Pipe or 3-in Concentric	2-1/2 (64)	2-1/2 (64)	21 (6.4)	13 (4.0)	5 (1.5)	NA	NA	NA
			3 (76)	3 (76)	54 (16.5)	49 (14.9)	44 (13.4)	39 (11.9)	34 (10.4)	29 (8.8)
	120,000	2 Pipe or 3-in. Concentric	NA	3 (76)†	39 (11.9)	37 (11.3)	35 (10.7)	33 (10.1)	31 (9.4)	29 (8.8)
			4 (102)† no disk	4 (102)† no disk	10 (3.0)	5 (1.5)	NA	NA	NA	NA
	140,000	NA								

* Disk usage-Unless otherwise specified, use perforated disk assembly (factory-supplied in loose parts bag).

If one disk is stated, separate 2 halves of perforated disk assembly and use shouldered disk half. When using shouldered disk half, install screen side toward inlet box.

† Wide radius elbow.

‡ Vent sizing for Canadian installations over 4500 ft (1370 M) above sea level are subject to acceptance by the local authorities having jurisdiction. NA-Not Allowed; pressure switch will not make.

NOTES:

1. Do not use pipe size greater than those specified in table or incomplete combustion, flame disturbance, or flame sense lockout may occur.
2. Size both the combustion-air and vent pipe independently, then use the larger diameter for both pipes.
3. Assume two 45° elbows equal one 90° elbow. Wide radius elbows are desirable and may be required in some cases.
4. Elbows and pipe sections within the furnace casing and at the vent termination should not be included in vent length or elbow count.
5. The minimum pipe length is 5 ft (1.5 M) for all applications.
6. Use 3-in. (76 mm) diameter vent termination kit for installations requiring 4-in (102 mm) diameter pipe.

Table 12 – Vent Length for Outlet Restrictor Usage (60,000 btu model only) - Ft (M)‡

ALTITUDE – FT (M)	UNIT SIZE	DIRECT VENT (2–PIPE)	NON–DIRECT VENT (1–PIPE ONLY)	NO. OF 90° ELBOWS				
		PIPE DIA. (IN / mm)	PIPE DIA. (IN / mm)	1	2	3	4	5
0 – 2000 (0 – 610)	60,000	2–in. (51)	2–in. (51)	28 (8.5)	20 (6)	15 (4.2)	10 (3)	
2001 – 3000 (610 – 914)		2–in. (51)	2–in. (51)	24 (7.3)	17 (5.1)	12 (3.6)	7 (2.1)	
3001 – 4000 (914 – 1219)		2–in. (51)	2–in. (51)	21 (6.4)	13 (3.9)	8 (2.4)		
4001 – 5000 (1219 – 1524)		2–in. (51)	2–in. (51)	17 (5.1)	10 (3)	5 (1.5)		
5001 – 6000 (1524 – 1829)		2–in. (51)	2–in. (51)	14 (4.2)	6 (1.8)			
6001 – 7000 (1829 – 2134)		2–in. (51)	2–in. (51)	10 (3)				
7001 – 8000 (2134 – 2438)		2–in. (51)	2–in. (51)	6 (1.8)				
8001 – 9000 (2438 – 2743)		2–in. (51)	2–in. (51)					
9001 – 10000 (2743 – 3048)		2–in. (51)	2–in. (51)					

‡Discard outlet restrictor if vent lengths or elbows exceed the above table Discard restrictor if using 11/2–in. (38mm) diameter pipe. See Fig. 37 and 38 for proper installation.

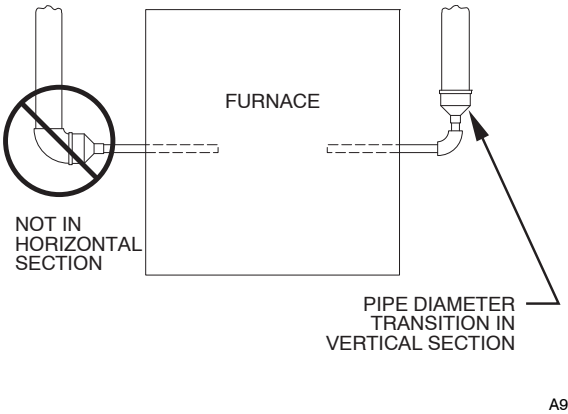

Fig. 39 - Combustion-Air and Vent Pipe Diameter Transition Location and Elbow Configuration

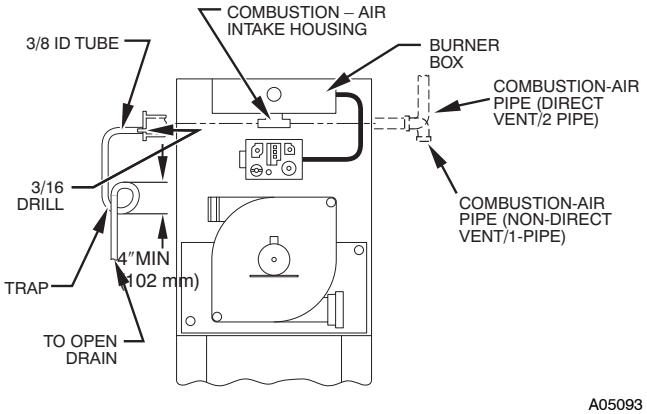

Fig. 40 - Air Intake Housing Plug Fitting Drain

Attachment of Combustion Air Intake Housing Plug Fitting

The combustion-air intake plug fitting must be installed in unused combustion air intake housing. This fitting must be attached by using RTV sealant, or by drilling a 1/8-in. (3 mm) hole in fitting, using hole in intake housing as a guide. Install a field-supplied No. 6 or No. 8 sheet metal screw.

NOTE: DO NOT OVERTIGHTEN SCREW. Breakage of intake housing or fitting may cause air leakage to occur.

A plugged drain connection has been provided on this fitting for use when moisture is found in combustion air intake pipe and combustion box. If use of this drain connection is desired, drill out fitting's tap plug with 3/16-in. (5 mm)drill and connect a field-supplied 3/8-in. (10 mm) tube. This tube should be routed to open condensate drain for furnace and A/C (If used), and should be trapped, as shown in Fig. 40.

NOTE: (Direct Vent/2-Pipe System ONLY) Moisture in combustion air intake may be a result of improper termination. Ensure combustion air pipe termination is similar to those as shown in Fig. 42 so that it will not be susceptible to area where light snow or other sources of moisture could be pulled in.

VENT PIPE

General

Furnace vent connection must be attached as shown in Fig. 35.

⚠ WARNING

CARBON MONOXIDE POISONING AND PROPERTY DAMAGE HAZARD

Failure to follow this warning could result in property damage, personal injury, or death.

Vent pipes must be airtight.

NOTE: A 2-in. (51 mm) diameter pipe must be used within the furnace casing. Make all pipe diameter transitions outside furnace casing per Fig. 39.

The minimum vent pipe length for these furnaces is 5 ft. Short pipe lengths (5 - 8 ft) may discharge condensate droplets. These condensate droplets may be undesirable. A 12-in. (305 mm) minimum offset pipe section is recommended to reduce excessive condensate droplets from exiting vent pipe outlet. (See Fig. 41)

Attachment of Vent Pipe

1. Determine vent pipe diameter and maximum pipe lengths Using Table 11.

NOTE: (Direct Vent/2-Pipe ONLY) vent pipe system has the same diameter and same length as combustion air pipe as mentioned in section "Assembly of Combustion Air Pipe (Direct Vent/2-Pipe system ONLY)."

NOTE: Do not count elbows or pipe sections in terminations or within furnace (all elbows shown in Fig. 42 and Fig. 43 are not be counted).

2. Determine location of vent pipe connection to inducer housing as shown in Fig. 35 for application.
3. Reposition elastomeric (rubber) inducer housing outlet cap and clamp to appropriate unused inducer housing connection. Tighten clamp.

⚠ CAUTION

UNIT DAMAGE HAZARD

Failure to follow this caution may result in unit component damage.

Inducer housing outlet cap must be installed and fully seated against inducer housing. Clamp must be tightened to prevent any condensate leakage.

4. Install pipe support (factory-supplied in loose parts bag) into selected furnace casing vent pipe hole. Pipe support should be positioned at bottom of casing hole.
5. Be certain that mating surfaces of inducer housing connection elastomeric (rubber) coupling, and 2-in. (51 mm) diameter vent pipe are clean and dry. Assemble the elastomeric (rubber) vent coupling (with 2 loose clamps) onto inducer housing connection. Insert the 2-in. (51 mm) diameter vent pipe through the elastomeric (rubber) coupling and fully into inducer housing connection until it touches a stop inside the inducer housing outlet. Tighten the screws on both clamps to 15-in-lb. of torque. pipe to inducer housing. Tighten the clamp screws to 15-in-lb. of torque.

NOTE: Starting at furnace, slope vent pipe a minimum of 1/4-in. (6 mm) per linear ft with no sags between hangers.

⚠ CAUTION

UNIT DAMAGE HAZARD

Failure to follow this caution may result in unit component damage.

Vent pipe must be installed and fully seated against inducer housing internal stop. Clamp must be tightened to prevent any condensate leakage.

6. Install casing hole filler cap (factory-supplied in loose parts bag) in unused vent pipe casing hole.

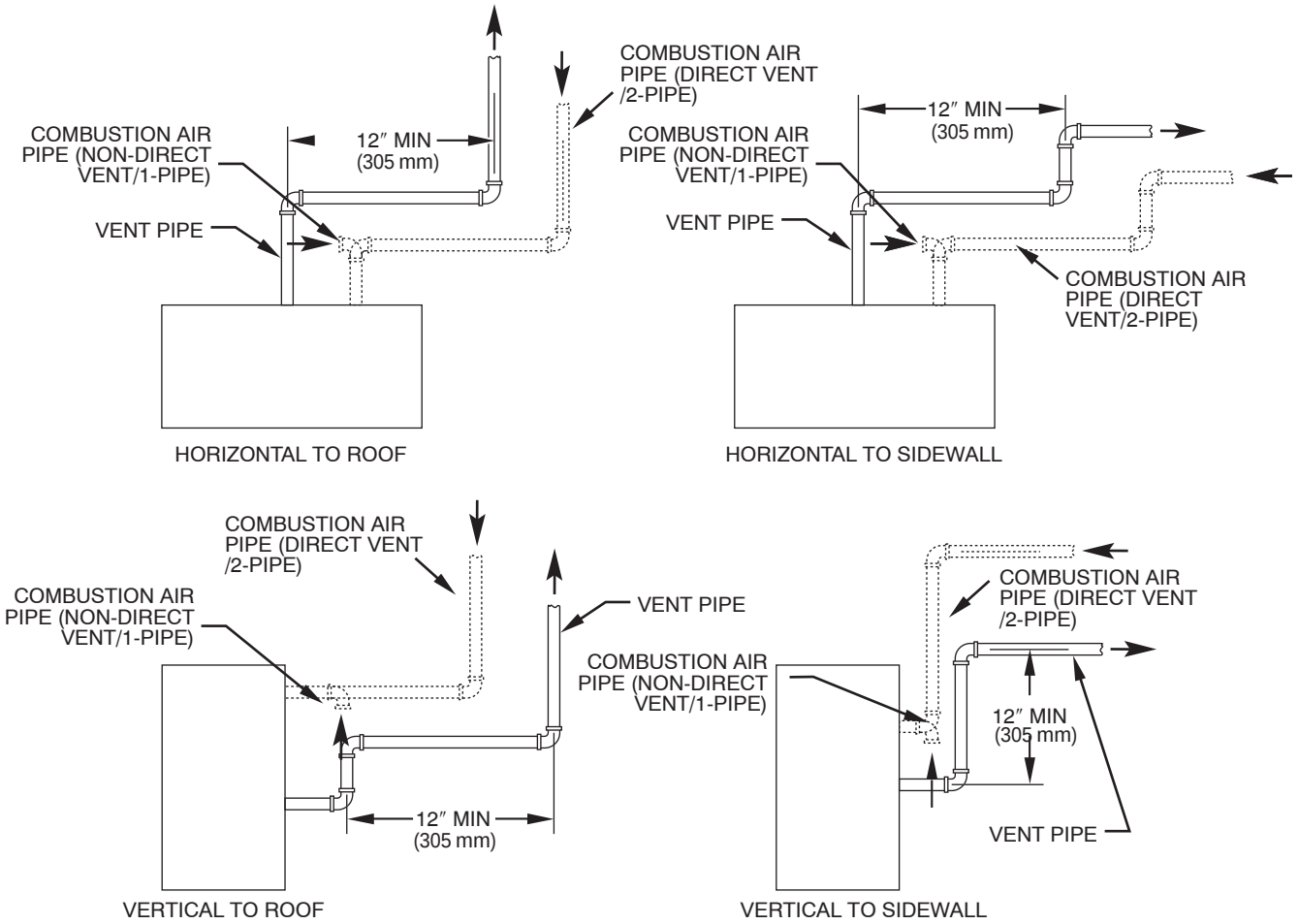

NOTE: A 12-in. (305 mm) minimum offset pipe section is recommended with short (5-ft. to 8-ft (1.5 to 2.4 M)) vent systems. This recommendation is to reduce excessive condensate droplets from exiting the vent pipe

A05094

Fig. 41 - Short Vent (5 to 8 ft) System

Attachment of Vent Extension Pipe

Furnaces with 100,000 Btuh and larger input are supplied with a PVC vent extension pipe (2-in. (51 mm) diameter by 12-in. (305 mm) long). This pipe has a built-in channel to assist vent condensate disposal. When this vent extension pipe is supplied, it MUST be used to connect the field vent pipe to furnace inducer housing on ALL upflow and downflow applications.

NOTE: See label on vent extension pipe for proper installation. This pipe may be shortened if an elbow is used to connect vent extension tube to field-installed vent pipe.

Installation Guidelines for Combustion Air Pipe and Vent Pipe

It is recommended that all pipes be cut, prepared, and pre-assembled before permanently cementing any joint.

1. Attach combustion air pipe and vent pipe per instructions in sections “Combustion Air Pipe” and “Vent Pipe.”
2. Working from furnace to outside, cut pipe to required length(s).
3. Deburr inside and outside of pipe.
4. Chamfer outside edge of pipe for better distribution of primer and cement.
5. Clean and dry all surfaces to be joined.
6. Check dry fit of pipe and mark insertion depth on pipe.
7. After pipes have been cut and preassembled, apply generous layer of cement primer to pipe fitting socket and end of pipe to insertion mark. Quickly apply approved cement to end of pipe and fitting socket (over primer). Apply cement in a light, uniform coat on inside of socket to prevent buildup of excess cement. Apply second coat.
8. While cement is still wet, twist pipe into socket with 1/4 turn. Be sure pipe is fully inserted into fitting socket.
9. Wipe excess cement from joint. A continuous bead of cement will be visible around perimeter of a properly made joint.
10. Handle pipe joints carefully until cement sets.
11. Horizontal portions of the venting system shall be supportive to prevent sagging support. Support combustion air piping (if applicable) and vent piping a minimum of every 5 ft (1.5 M) (3 ft (0.9 M) for SDR-21 or -26 PVC) using perforated metal hanging strap.
12. Slope combustion air piping (if applicable) and vent piping downward towards furnace a minimum of 1/4-in. (6 mm) per linear ft with no sags between hangers.
13. Horizontal portions of the venting system shall be installed so as to prevent the accumulation of condensate.
14. Use appropriate methods to seal openings where combustion air pipe (if applicable) and vent pipe pass through roof or sidewall.

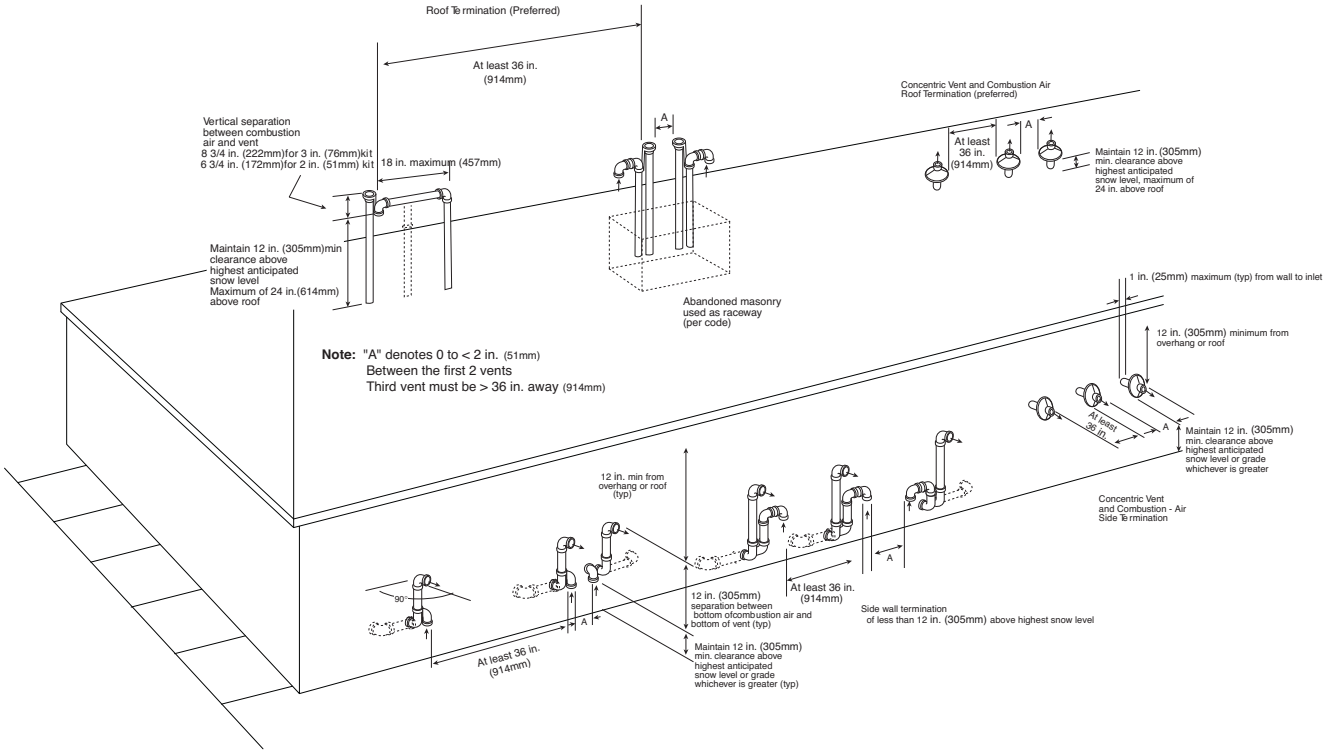

A05090

Fig. 42 - Combustion Air and Vent Pipe Termination for Direct Vent (2-pipe) System

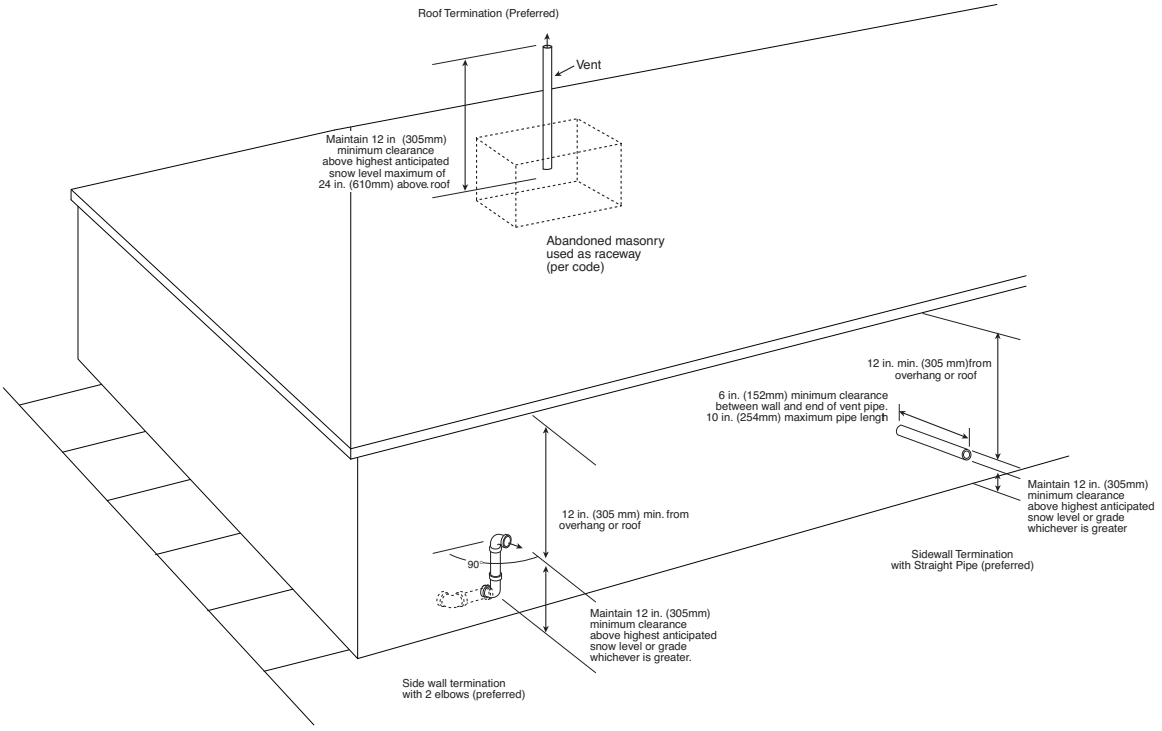

A05091

Fig. 43 - Vent Pipe Termination for Non-Direct Vent (1-pipe) System

PG9MAB

Table 13 – Vent Termination Kit for Direct Vent/2-Pipe System

DIRECT VENT (2-PIPE) TERMINATION KIT	TERMINATION SYSTEM	DIAM. OF COMBUSTION AIR AND VENT PIPES – IN (mm)
2-in. (51 mm) Concentric Vent Kit	Single Penetration of Wall or Roof	1, 1–1/2, 2, or 2–1/2 (25, 38, 51, 64 mm)
3-in. (76 mm)Concentric Vent Kit	Single Penetration of Wall or Roof	2–1/2, 3 or 4 (64, 76, 102 mm)
2-in. (51 mm)Termination Bracket Kit	2–Pipe Termination System	1, 1–1/2 or 2 (25, 38, 51mm)
3-in. (76 mm) Termination Bracket Kit	2–Pipe Termination System	2–1/2, 3 or 4 (64, 76, 102 mm)

EXAMPLE:

An 080-12 size furnace located in Indianapolis, elevation 650 ft (198 M) above sea level, could be installed as either a direct vent/2-pipe system that requires 3 elbows and 32 ft (9.8 M) of vent pipe, along with 5 elbows and 34 ft (10.4 M) of combustion-air pipe OR a non-direct vent/1-pipe system that requires 3 elbows and 32 (9.8 M) ft vent pipe.

For a direct vent/2-pipe system, Table 11 indicates this application would allow a 2-in. (51 mm) diameter vent pipe, but require a 2-1/2 in. (64 mm) diameter combustion air pipe. According to Table 11, 2-in. (51 mm) diameter pipe is good for 35 ft (10.7 M) with 3 elbows, but only 30 ft (9.1 M) with 5 elbows. Therefore, 2-1/2 in. (64 mm) diameter pipe must be used for both vent and combustion-air pipe since larger required diameter must always be used for both pipes.

For a non-direct vent/1-pipe system, Table 11 indicates that this application would allow a 2-in. (51 mm) diameter vent pipe. If same installations were in Albuquerque, elevation 5250 ft (1600 M) above sea level:

For a direct vent/2-pipe system, Table 11 indicates that 2-1/2-in. (64 mm) diameter vent pipe and combustion-air pipe are required.

For a non-direct vent/1-pipe system, Table 11 indicates that 2-1/2-in. (64 mm) diameter vent pipe is required.

If same applications are to be installed at 5001 to 6000 ft (1524 to 1829 M) elevation:

For a direct vent/2-pipe system, 2-in. (51 mm) pipe is only good for 23 ft (7.0 M) (with 3 elbows) and 17 ft (5.2 M)(with 5 elbows). Therefore, 2-1/2 in. (51 mm) diameter combustion air and vent pipe must be used.

For a non-direct vent/1-pipe system, a 2-in. (51 mm) diameter pipe is only good for 23 ft (7.0 M) with 3 elbows. A 2-1/2-in. (64 mm) diameter vent pipe must be used.

VENT TERMINATION

General

Combustion-air (direct vent/2-pipe system only) and vent pipe must terminate outside structure, either through sidewall or roof. For vent termination clearance, refer to Table 8 for Direct Vent/2-Pipe system and Table 9 for Non-direct Vent/1-Pipe system. For exterior piping arrangements, refer to Fig. 42 for Direct Vent/2-Pipe system and Fig. 43 for Non-Direct/ 1-Pipe system.

Roof termination is preferred since it is less susceptible to damage or contamination, and it has less visible vent vapors. Sidewall termination require sealing or shielding of building surfaces with a corrosive resistance material due to corrosive combustion products of vent system.

NOTE: (Direct Vent/2-Pipe system ONLY) A factory accessory termination kit MUST be used. See section "Vent Termination Kit (Direct Vent/2-Pipe System Only)" in this instruction.

When determining appropriate location for termination, consider the following guidelines:

1. Comply with all clearance requirements stated in Table 8 or Table 9 per application.
2. Termination or termination kit should be positioned where vent vapors will not damage plants/shrubs or air conditioning equipment.
3. Termination or termination kit should be positioned so that it will not be affected by wind eddy, such as inside building corners, nor by recirculation of flue gases, airborne leaves, or light snow.
4. Termination or termination kit should be positioned where it will not be damaged by or subjected to foreign objects such as stones, balls, etc.
5. Termination or termination kit should be positioned where vent vapors are not objectionable.

Extended Exposed Sidewall Pipes

Sidewall combustion air pipe termination (direct vent/2-pipe system only) and vent pipe termination may be extended beyond area shown in Fig. 42 or in Fig. 43 per application in outside ambient by insulating pipe as indicated in Table 10.

1. Determine combustion air pipe diameter (direct vent/2-pipe system only) and vent pipe diameter, as stated above, using total pipe length and number of elbows.
2. Using winter design temperature (used in load calculations), find appropriate temperature for your application and furnace model.
3. Determine required insulation thickness for exposed pipe length(s).

NOTE: Pipe length (ft) specified for maximum pipe lengths located in unconditioned spaces cannot exceed total allowable pipe length as specified in Table 11.

Vent Termination Kit (Direct Vent/2-Pipe System Only)

NOTE: Always refer to the instructions in termination kit for the latest version.

Combustion air and vent pipes MUST terminate outside structure.

A factory accessory termination kit must be installed as shown in Table 13. There are four options of vent/combustion air termination kits available as shown in Table 13.

NOTE: Combustion air pipe must have the same diameter as vent pipe.

Concentric Vent/Combustion Air Termination Kit (Direct Vent/ 2-Pipe System Only)

Determine an appropriate location for termination kit using the guidelines provided in section "Vent Termination: General" in this instruction.

1. Cut one 4-in. (102 mm) diameter hole for 2-in. (51 mm) kit, or one 5-in. (127 mm) diameter hole for 3-in. (76 mm) kit.
2. Loosely assemble concentric vent/combustion air termination components together using instructions in kit.
3. Slide assembled kit with rain shield REMOVED through hole.

NOTE: Do not allow insulation or other materials to accumulate inside of pipe assembly when installing it through hole.

Roof terminations – Locate assembly through roof to appropriate height as shown in Fig. 42.

Sidewall terminations – Locate assembly through side wall with rain shield positioned no more than 1-in. (25 mm) from wall as shown in Fig. 42.

4. Disassemble loose pipe fittings. Clean and cement using same procedures as used for system piping.
5. Check required dimensions as shown in Fig. 42.

Two-Pipe Termination Kit (Direct Vent/2-Pipe System Only

Determine an appropriate location for termination kit using the guidelines provided in section "Vent Termination: General" in this instruction.

1. Cut 2 holes, 1 for each pipe, of appropriate size for pipe size being used.
2. Loosely install elbow in bracket and place assembly on combustion-air pipe.

   Roof terminations – Loosely install pipe coupling on properly cut vent pipe. Coupling must be positioned so bracket will mount as shown in Fig. 42.

   For applications using combustion-air pipe option, indicated by dashed lines in Fig. 42, install 90° street elbow into 90° elbow, making a U-fitting. A 180° U-fitting may be used.

   Sidewall terminations – Install bracket as shown in Fig. 42.

   For applications using vent pipe option indicated by dashed lines in Fig. 42, rotate vent elbow 90° from position shown in Fig. 42.
3. Disassemble loose pipe fittings. Clean and cement using same procedures as used for system piping.
4. Check required dimensions as shown in Fig. 42.

Multi-venting and Vent Terminations

When 2 or more PG9MAB Furnaces are vented near each other, each furnace must be individually vented. NEVER common vent or breach vent PG9MAB furnaces.

(Direct Vent/2-Pipe System ONLY) – When 2 or more PG9MAB furnaces are vented near each other, 2 vent terminations may be installed as shown in Fig. 42, but next vent termination must be at least 36 in. (914 mm) away from first 2 terminations. It is important that vent terminations be made as shown in Fig. 42 to avoid recirculation of flue gases.

Step 11 – Condensate Drain

GENERAL

Condensate trap is shipped installed in the blower shelf and factory connected for UPFLOW applications. Condensate trap must be RELOCATED for use in DOWNFLOW and HORIZONTAL applications.

Condensate trap MUST be used for all applications.

An external trap is not required when connecting the field drain to this condensate trap.

The field drain connection (condensate trap or drain tube coupling) is sized for 1/2-in. (13 mm) CPVC, 1/2-in. (13 mm) PVC, or 5/8 in. (16 mm) ID tube connection.

Drain pipe and fittings must conform to ANSI standards and ASTM D1785, D2466 or D2846. CPVC or PVC cement must conform to ASTM D2564 or F493. Primer must conform to ASTM F656. In Canada, use CSA or ULC listed schedule 40 CPVC or PVC drain pipe, fittings, and cement.

When a condensate pump is required, select a pump which is approved for condensing furnace applications. To avoid condensate spillage, select a pump with an overflow switch.

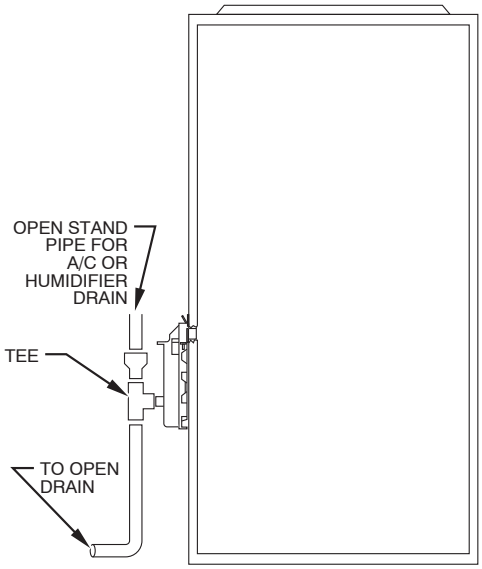

A94054

Fig. 44 – Example of Field Drain Attachment

Furnace condensate is mildly acidic, typically in the pH range of 3.2 to 4.5. Due to corrosive nature of this condensate, a condensate pH neutralizing filter may be desired. Check with local authorities to determine if a pH neutralizer is required.

APPLICATION

The furnace, A/C, and humidifier drains may be combined and drained together. The A/C drain must have an external, field-supplied trap prior to the furnace drain connection. All drain connections (furnace, A/C, or humidifier) must be terminated into an open or vented drain as close to the respective equipment as possible to prevent siphoning of the equipment's drain.

See Fig. 44 for example of possible field drain attachment using 1/2-in. (13 mm) CPVC or PVC tee for vent and A/C or humidifier drain connection.

Outdoor draining of the furnace is permissible if allowed by local codes. Caution should be taken when freezing. Ambient may freeze drain pipe and prohibit draining.

⚠ WARNING

PERSONAL INJURY HAZARD

Caution should be taken to prevent draining where slippery conditions may cause personal injuries.

Excessive condensate draining may cause saturated soil conditions which could result in damage to plants.

CONDENSATE DRAIN PROTECTION

Freezing condensate left in condensate trap and drain line may cause cracks, and possible water damage may occur. If freeze protection is required, use condensate freeze protection accessory or equivalent 3 to 6 watt per ft at 120v and 40°F (4°C) self-regulating, shielded, and waterproof heat tape. See Installation Instructions supplied with accessory or heat tape manufacturer's recommendations.

1. Fold heat tape in half and wrap on itself 3 times.
2. Locate heat tape between sides of condensate trap back. (See Fig. 45.)

3. Use wire ties to secure heat tape in place. Wire ties can be positioned in notches of condensate trap sides.
4. Wrap field drain pipe with remaining heat tape, approximately 1 wrap per ft.
5. When using field-supplied heat tape, follow heat tape manufacturer's instructions for all other installation guidelines.

START-UP, ADJUSTMENT AND SAFETY CHECK

Step 1 - General

1. Furnace must have a 115-v power supply properly connected and grounded. Proper polarity must be maintained for correct operation.

NOTE: Proper polarity and proper grounding must be maintained for 115-v wiring. If polarity is incorrect, control center LED status indicator light will flash rapidly and furnace will not operate.

2. Thermostat wire connections at terminals R, W, G, and Y must be made at 24-v terminal block on furnace control center.
3. Natural gas service pressure must not exceed 0.5 psig (14-in. wc), but must be no less than 0.16 psig (4.5-in. wc).
4. Blower access panel must be in place to complete 115-v electrical circuit to furnace.

⚠ CAUTION

UNIT MAY NOT OPERATE

Failure to follow this caution may result in intermittent unit operation.

These furnaces are equipped with a manual reset limit switch in burner box. This switch will open and shut power to gas valve if an overheat condition (flame rollout) occurs in burner enclosure. Correct inadequate combustion-air supply or improper venting condition and reset switch. DO NOT jumper this switch.

Before operating furnace, check flame rollout manual reset switch for continuity. If necessary, press button to reset switch.

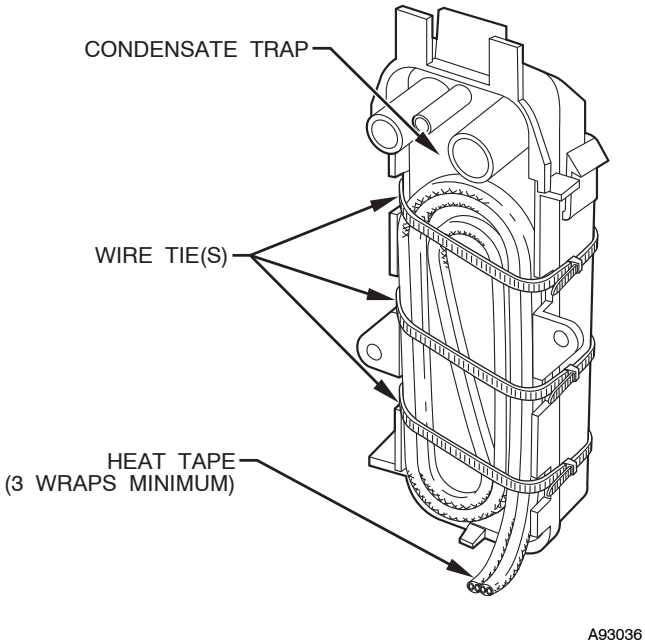

Fig. 45 - Condensate Trap Heat Tape

Step 2 - Prime Condensate Trap with Water

⚠ CAUTION

UNIT MAY NOT OPERATE

Failure to follow this caution may result in intermittent unit operation.

Condensate trap must be PRIMED or proper draining may not occur. The condensate trap has 2 internal chambers which can ONLY be primed by pouring water into the inducer drain side of condensate trap.

1. Remove upper inducer housing drain connection cap. (See Fig. 46.)
2. Connect field-supplied 1/2-in. (13 mm) ID tube to upper inducer housing drain connection.
3. Insert field-supplied funnel into tube.
4. Pour 1 quart of water into funnel/tube. Water should run through inducer housing, overfill condensate trap, and flow into open field drain. (See Fig. 47.)
5. Remove funnel and tube from inducer housing and replace drain connection cap and clamp.

Step 3 - Purge Gas Lines

⚠ WARNING

FIRE AND EXPLOSION HAZARD

Failure to follow this warning could result in a fire, explosion, personal injury, or death.

Never purge a gas line into a combustion chamber. Never test for gas leaks with an open flame. Use a commercially available soap solution made specifically for the detection of leaks to check all connections.

If not previously done, purge lines after all connections have been made and check for leaks.

Step 4 - Sequence of Operation

⚠ CAUTION

FURNACE MAY NOT OPERATE

Failure to follow this caution may result in furnace operation stopping and water pipes freezing during cold weather.

Furnace control must be grounded for proper operation, or control will lock out. Control is grounded through green/yellow wire routed to gas valve and burner box screw.

Using schematic diagram, follow sequence of operation through different modes. (See Fig. 33.) Read and follow wiring diagram carefully.

NOTE: If a power interruption occurs during a call for heat (W), the control will start a 90-second blower-only ON period two seconds after power is restored, if the thermostat is still calling for gas heating. The red LED light will flash code 12 during the 90-second period, after which the LED will be ON continuous, as long as no faults are detected. After the 90-second period, the furnace will respond to the thermostat normally.

The blower door must be installed for power to be conducted through the blower door interlock switch ILK to the furnace control CPU, transformer TRAN, inducer motor IDM, blower motor BLWM, hot-surface igniter HSI, and gas valve GV.

HEATING MODE

(See Fig. 30 for thermostat connections.)

The wall thermostat "calls for heat", closing the R to W circuit. The furnace control performs a self-check, verifies the pressure switch contacts PRS are open, and starts the inducer motor IDM.

a. **Inducer Prepurge Period –** As the inducer motor IDM comes up to speed, the pressure switch contacts PRS close, 24 vac power is supplied for a field installed humidifier at the HUM terminal and the control begins a 15-second prepurge period.

b. **Igniter Warm-Up –** At the end of the prepurge period, the Hot-Surface Igniter HIS is energized for a 17-second igniter warm-up period.

c. **Trial-for-Ignition Sequence –** When the igniter warm up period is completed the main gas valve relay contacts GVR close to energize the gas valve GV, the gas valve opens. The gas valve GV permits gas flow to the burners where it is ignited by the Hot Surface Igniter HSI. Five seconds after the GVR closes, a 2-second flame period begins. The HSI igniter will remain energized until the flame is sensed or until the 2-second flame proving period begins.

d. **Flame-Proving –** When the burner flame is proved at the flame-proving sensor electrode FSE, the furnace control CPU begins the blower-ON delay period and continues to hold the gas valve GV open. If the burner flame is not proved within two seconds, the control CPU will close the gas valve GV, and the control CPU will repeat the ignition sequence for up to three more Trials-For-Ignition before going to Ignition-Lockout. **Lockout will be reset** automatically after three hours, by momentarily interrupting 115 vac power to the furnace, or by interrupting 24 vac power at SEC1 or SEC2 to the furnace control CPU (not at W,G,R, etc.) If flame is proved when flame should not be present, the furnace control CPU will lock out of Gas-Heating mode and operate the inducer motor IDM until flame is no longer proved.

e. **Blower-On Delay –** If the burner flame is proven, the blower motor is energized on HEAT speed 66 seconds (040 through 120 sizes) or 45 seconds (140 size) after the gas valve GV is energized.
Simultaneously, the electronic air cleaner terminal EAC–1 is energized and remains energized as long as the blower motor BLWM is energized.

f. **Blower-Off Delay –** When the thermostat is satisfied, the R-to-W circuit is opened, de-energizing the gas valve GV, stopping gas flow to the burners, and de-energizing the humidifier terminal HUM. The inducer motor IDM will remain energized for a 15-second (040 through 120 sizes) or 5-second (140 size) post-purge period. The blower motor BLWM and air cleaner terminal EAC–1 will remain energized for 90, 120, 150, or 180 seconds (depending on the blower-OFF delay selection). The furnace control CPU is factory-set for a 120-second blower-OFF delay.

COOLING MODE

(See Fig. 30 for thermostat connections)

The thermostat closes the R-to-G-and-Y circuits. The R-to-Y circuit starts the outdoor unit, and the R-to-G and Y circuits start the furnace blower motor BLWM on COOL speed.

The electronic air cleaner terminal EAC–1 is energized with 115 vac when the blower motor BLWM is operating.

When the thermostat is satisfied, the R-to-G-and-Y circuits are opened. The outdoor unit will stop, and the furnace blower motor BLWM will continue operating on the COOL speed for an additional 90 seconds. Cut jumper J2 to reduce the cooling off-delay to 5 seconds.

CONTINUOUS BLOWER MODE

When the R-to-G circuit is closed by the thermostat, the blower motor BLWM will operate on continuous-blower speed (same as HEAT speed). Terminal EAC–1 is energized as long as the blower motor BLWM is energized.

During a "call for heat," the blower BLWM will stop during igniter warm-up (17 seconds), ignition (7 seconds), and blower-ON delay (66 or 45 seconds for 040 through 120 sizes or for 140 size), allowing the furnace heat exchangers to heat up more quickly, then restarts at the end of the blower-ON delay period at HEAT speed. In heating, the furnace control CPU will continue running the blower motor BLWM at HEAT speed after the selected blower-OFF delay period is completed.

When the thermostat "calls for cooling", the blower motor BLWM will operate at COOL speed. When the thermostat is satisfied, the blower motor BLWM will operate an additional 90 seconds on COOL speed before reverting back to HEAT speed. Jumper J2 can be cut to reduce the cooling off-delay to 5 seconds. (See Fig. 33.) When the R-to-G circuit is opened, the blower motor BLWM will continue operating for an additional 5 seconds, if no other function requires blower motor BLWM operation.

HEAT PUMP MODE

When installed with a heat pump, the furnace control automatically changes the timing sequence to avoid long blower off times during demand defrost cycles. When the R-to-W-and-Y or R-to-W-and-Y-and-G circuits are energized the furnace control CPU will continue to turn on the blower motor BLWM at HEAT speed, and begin a heating cycle. The blower motor BLWM will remain on until the end of the prepurge period, then shut off for 24 seconds then come back on at HEAT speed. When the W input signal disappears, the furnace control begins a normal inducer post-purge period and the blower switches to COOL speed after a 3 second delay. If the R-to-W-and-Y-and-G signals disappear at the same time, the blower motor BLWM will remain on for the selected blower-OFF delay period. If the R-to-W-and-Y signals disappear, leaving the G signal, the blower motor BLWM will continue running the blower motor BLWM at HEAT speed after the selected blower-OFF delay period is completed.

Control initiates a 90-sec blower only on period before starting another heat pump cycle if there is a power interruption. Anytime control senses false flame, control locks out of heating mode. This reaction occurs because control ignores W input due to false flame signal and, as a result, sees only Y input and goes into cooling mode blower off delay. All other control functions remain in standard format.

NOTE: EAC–1 terminal is energized whenever blower operates. HUM terminal is only energized when gas valve is energized.

COMPONENT TEST

NOTE: The furnace control component test allows all components to run for a short time; except the gas valve and humidifier terminal HUM are not energized for safety reasons. The EAC–1 terminal is energized when the blower is energized. This feature helps diagnose a system problem in case of a component failure. The component test feature will not operate if any thermostat signal is present at the control and not until all time delays are completed.

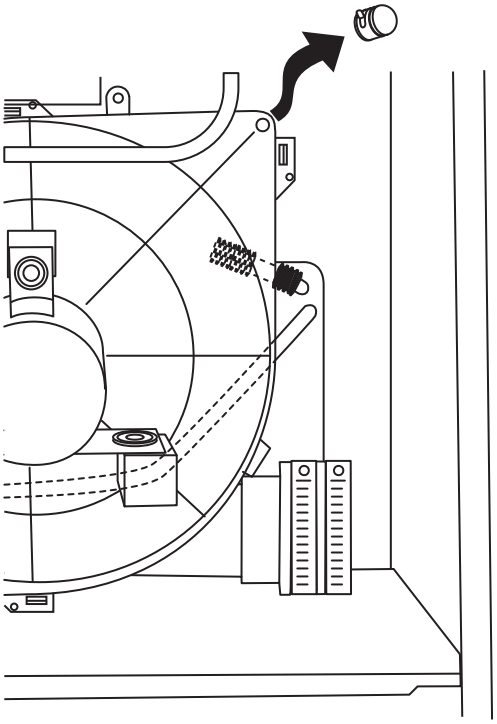

Fig. 46 - Inducer Housing Drain Tube Cap

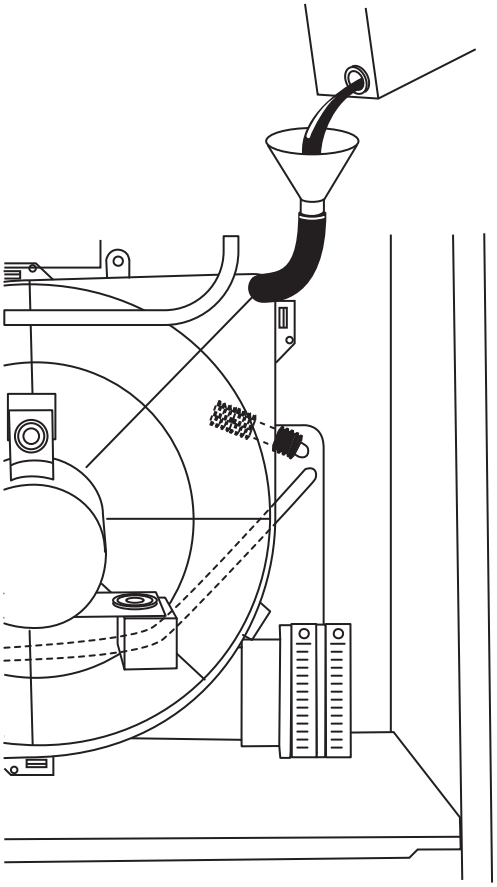

Fig. 47 - Filling Condensate Trap

NOTE: **Record the status code BEFORE** opening the blower access door and before shutting off power to the furnace. Opening the blower access door will open the blower door switch and shut off power within the furnace. When power to the furnace is shut off by either method, the status code will be lost because the code is not stored while power is removed for any reason.

To Begin Component Self-Test:

⚠ WARNING

ELECTRICAL SHOCK HAZARD

Failure to follow this warning could result in electrical shock, personal injury, or death.

Blower access panel door switch opens 115-v power to control center. No component operation can occur. Caution must be taken when manually closing this switch for service purposes.

1. Remove blower access door.
2. Disconnect the thermostat R lead from furnace control.
3. Manually close blower door switch.
4. For approximately 2 sec, short (jumper) the COM-24v terminal on control to the TEST/TWIN 3/16-in. (5 mm) quick-connect terminal on control until the LED goes out. Remove jumper from terminals. (See Fig. 34.)

NOTE: If TEST/TWIN and COM-24v terminals are jumpered longer than 2 sec, LED will flash rapidly and ignore component test request.

Component test sequence is as follows:

a. LED will display previous status code 4 times.
b. Inducer motor starts and continues to run until Step g of component test sequence.
c. After 7 seconds the hot surface igniter is energized for 15 sec., then off.
d. Blower motor operates on Continuous-FAN speed for 10 sec.
e. Blower motor operates on HEAT speed for 10 sec.
f. Blower motor operates on COOL speed for 10 sec.
g. Inducer motor stops.

5. Reconnect R lead to furnace control, remove tape from blower door switch, and re-install blower door.
6. Operate furnace per instruction on outer door.
7. Verify furnace shut down by lowering thermostat setting below room temperature.
8. Verify that furnace restarts by raising thermostat setting above room temperature.

Step 5 - Adjustments

SET GAS INPUT RATE

Furnace gas input rate on rating plate is for installations at altitudes up to 2000 ft. (610 M).

In the U.S.A., the input ratings for altitudes above 2000 ft (610 M) must be reduced by 2 percent for each 1000 ft (305 M) above sea level.

In Canada, the input ratings must be derated by 5 percent for altitudes of 2000 ft to 4500 ft (610 to 1372 M) above sea level.

Furnace input rate must be within ±2 percent of input on furnace rating plate adjusted for altitude.

1. Determine natural gas orifice size and manifold pressure for correct input.
   a. Obtain average yearly gas heat value (at installed altitude) from local gas supplier.
   b. Obtain average yearly gas specific gravity from local gas supplier.
   c. Verify furnace model. Table 14 can only be used for model PG9MAB furnaces with heating sizes of 040 through 120. Table 15 can only be used for model PG9MAB furnaces with a heating size of 140.

d. Find installation altitude in Table 14 or 15.

NOTE: For Canada altitudes of 2001 to 4500 ft, use U.S.A. altitudes of 2001 to 3000 ft (610 to 914 M) in Table 14 or 15.

e. Find closest natural gas heat value and specific gravity on Table 14 or 15.

f. Follow heat value and specific gravity lines to point of intersection to find orifice size and manifold pressure settings for proper operation.

EXAMPLE:

(0 – 2000 ft (0 – 610 M) altitude using Table 14)

Heating value = 1050 Btu/cu ft

Specific gravity = 0.62

Therefore: Orifice No. 45

Manifold pressure 3.6-in. wc

* Furnace is shipped with No. 45 orifices. In this example all main burner orifices are the correct size and do not need to be changed to obtain the proper input rate.

Check and verify burner orifice size in furnace. NEVER ASSUME ORIFICE SIZE; ALWAYS CHECK AND VERIFY.

2. Adjust manifold pressure to obtain input rate.

NOTE: Manifold pressure must always be measured with burner enclosure front REMOVED. Gas meter must always be clocked with burner enclosure front INSTALLED.

a. Remove burner enclosure front.

b. Remove cap that conceals adjustment screw for gas valve regulator. (See Fig. 48.)

c. Jumper R and W thermostat connections on control to start furnace.

d. Turn adjusting screw, counterclockwise (out) to decrease manifold pressure or clockwise (in) to increase manifold pressure.

NOTE: This furnace has been approved for a manifold pressure of 3.2 in. wc to 3.8 in. wc when installed at altitudes up to 2000 ft (610 M). For altitudes above 2000 ft (610 M), the manifold pressure can be adjusted from 2.0 in. wc to 3.8 in. wc. If manifold pressure is outside this range, change burner orifices to obtain pressure in this range.

⚠ CAUTION

UNIT DAMAGE HAZARD

Failure to follow this caution may result in reduced furnace life.

DO NOT bottom out gas valve regulator adjusting screw. This can result in unregulated manifold pressure and result in excess overfire and heat exchanger failures.

NOTE: If orifice hole appears damaged or it is suspected to have been redrilled, check orifice hole with a numbered drill bit of correct size. Never redrill an orifice. A burr-free and squarely aligned orifice hole is essential for proper flame characteristics.

e. Replace gas valve regulator adjustment screw cap.

f. Replace burner enclosure front and verify adjusted gas input rate using method outlined in item 3.

⚠ CAUTION

UNIT DAMAGE HAZARD

Failure to follow this caution may result in component damage due to flame impingement of burners and heat exchangers.

DO NOT redrill orifices. Improper drilling (burrs, out-of-round holes, etc.) can cause excessive burner noise and misdirection of burner flames. (See Fig. 49.)

g. Look through sight glass in burner enclosure and check burner flame. Burner flame should be clear blue, almost transparent. (See Fig. 50.)

h. Remove jumper from R and W.

3. Verify natural gas input rate by clocking gas meter.

NOTE: Be sure all pressure tubing, combustion-air and vent pipes, and burner enclosure front are in place when checking input by clocking gas meter.

a. Calculate high-altitude adjustment (if required).

UNITED STATES

At altitudes above 2000 ft (610 M), this furnace has been approved for a 2% derate for each 1000 ft (305 M) above sea level. See Table 16 for derate multiplier factor.

EXAMPLE: 100,000 BTUH INPUT FURNACE INSTALLED AT 4300 FT.

Furnace Input Rate at Sea Level	X	Derate Multiplier Factor	=	Furnace Input Rate at Installation Altitude
100,000	X	0.91	=	91,000

CANADA

At installation altitudes from 2001 to 4500 ft (610 to 1372 M), this furnace must be derated 5% by an authorized Gas Conversion Station or Dealer. To determine correct input rate for altitude, see example above and use 0.95 as derate multiplier factor.

b. Reinstall burner box cover.

c. Gas valve regulator seal cap MUST be on.

d. Turn off all other gas appliances and pilots.

e. Start furnace and let operate for 3 minutes.

f. Measure time (in sec) for gas meter test dial to complete 1 revolution.

g. Refer to Table 17 for cu ft of gas per hr.

h. Multiply gas rate (cu ft/hr) X heating value (Btu/cu ft) using natural gas heating value from local gas utility/supplier.

Table 14 – Model PG9MAB Orifice Size and Manifold Pressure for Correct Input

FOR USE WITH 040 THROUGH 120 SIZE FURNACES ONLY

(TABULATED DATA BASED ON 20,000 BTUH PER BURNER, DERATED 2%/1000 FT (305M) ABOVE SEA LEVEL)

ALTITUDE RANGE ft (m)		AVG. GAS HEAT VALUE AT ALTITUDE (Btu/cu ft)	SPECIFIC GRAVITY OF NATURAL GAS							
			0.58		0.60		0.62		0.64	
			Orifice No.	Manifold Pressure	Orifice No.	Manifold Pressure	Orifice No.	Manifold Pressure	Orifice No.	Manifold Pressure
U.S.A. and Canada		900	43	3.5	43	3.6	43	3.8	42	3.2
	0	925	44	3.8	43	3.5	43	3.6	43	3.7
	(0)	950	44	3.6	44	3.8	43	3.4	43	3.5
		975	44	3.4	44	3.6	44	3.7	44	3.8
	to	1000	44	3.3	44	3.4	44	3.5	44	3.6
		1025	**45**	**3.8**	44	3.2	44	3.3	44	3.4
	2000	1050	**45**	**3.6**	**45**	**3.7**	**45**	**3.8**	44	3.3
	(610)	1075	**45**	**3.4**	**45**	**3.5**	**45**	**3.7**	**45**	**3.8**
		1100	**45**	**3.3**	**45**	**3.4**	**45**	**3.5**	**45**	**3.6**
U.S.A. and Canada	U.S.A.	800	43	3.8	42	3.2	42	3.3	42	3.5
	2001 (611)	825	43	3.6	43	3.7	43	3.8	42	3.2
	to	850	43	3.4	43	3.5	43	3.6	43	3.7
	3000 (914)	875	44	3.7	44	3.8	43	3.4	43	3.5
		900	44	3.5	44	3.6	44	3.7	44	3.8
	Canada	925	44	3.3	44	3.4	44	3.5	44	3.6
	2001 (611)	950	**45**	**3.7**	44	3.2	44	3.3	44	3.4
	to	975	**45**	**3.6**	**45**	**3.7**	**45**	**3.8**	44	3.2
	4500 (1372)	1000	**45**	**3.4**	**45**	**3.5**	**45**	**3.6**	**45**	**3.7**
U.S.A. Only		775	43	3.7	42	3.2	42	3.3	42	3.4
	3001	800	43	3.5	43	3.6	43	3.8	42	3.2
	(915)	825	44	3.8	43	3.4	43	3.5	43	3.7
	to	850	44	3.6	44	3.7	44	3.8	43	3.4
		875	44	3.4	44	3.5	44	3.6	44	3.7
	4000	900	44	3.2	44	3.3	44	3.4	44	3.5
	(1219)	925	**45**	**3.7**	**45**	**3.8**	44	3.2	44	3.3
		950	**45**	**3.5**	**45**	**3.6**	**45**	**3.7**	**45**	**3.8**
U.S.A. Only		750	43	3.7	43	3.8	42	3.2	42	3.3
	4001	775	43	3.5	43	3.6	43	3.7	43	3.8
	(1220)	800	44	3.7	43	3.4	43	3.5	43	3.6
	to	825	44	3.5	44	3.6	44	3.7	43	3.4
		850	44	3.3	44	3.4	44	3.5	44	3.6
	5000	875	**45**	**3.8**	44	3.2	44	3.3	44	3.4
	(1524)	900	**45**	**3.6**	**45**	**3.7**	**45**	**3.8**	44	3.2
		925	**45**	**3.4**	**45**	**3.5**	**45**	**3.6**	**45**	**3.7**
U.S.A. Only		725	43	3.6	43	3.8	42	3.2	42	3.3
	5001	750	43	3.4	43	3.5	43	3.6	43	3.8
	(1525)	775	44	3.7	44	3.8	43	3.4	43	3.5
	to	800	44	3.4	44	3.6	44	3.7	44	3.8
		825	44	3.2	44	3.3	44	3.4	44	3.6
	6000	850	**45**	**3.7**	**45**	**3.8**	44	3.2	44	3.4
	(1829)	875	**45**	**3.5**	**45**	**3.6**	**45**	**3.7**	**45**	**3.8**
		900	**45**	**3.3**	**45**	**3.4**	**45**	**3.5**	**45**	**3.6**
U.S.A. Only		675	42	3.2	42	3.3	42	3.4	42	3.5
	6001	700	43	3.6	43	3.7	43	3.8	42	3.3
	(1830)	725	44	3.8	43	3.5	43	3.6	43	3.7
	to	750	44	3.6	44	3.7	44	3.8	43	3.5
		775	44	3.4	44	3.5	44	3.6	44	3.7
	7000	800	**45**	**3.8**	44	3.3	44	3.4	44	3.5
	(2133)	825	**45**	**3.6**	**45**	**3.7**	**45**	**3.8**	44	3.3
		850	**45**	**3.4**	**45**	**3.5**	**45**	**3.6**	**45**	**3.7**

* Orifice numbers shown in **BOLD** are factory-installed.

A08606A

Percents of derate are based on midpoint of U.S. altitude ranges.

Table 14 - Model PG9MAB Orifice Size and Manifold Pressure for Correct Input (Continued)

FOR USE WITH 040 THROUGH 120 SIZE FURNACES ONLY

(TABULATED DATA BASED ON 20,000 BTUH PER BURNER, DERATED 2%/1000 FT (305M) ABOVE SEA LEVEL)

ALTITUDE RANGE ft (m)		AVG. GAS HEAT VALUE AT ALTITUDE (Btu/cu ft)	SPECIFIC GRAVITY OF NATURAL GAS							
			0.58		0.60		0.62		0.64	
			Orifice No.	Manifold Pressure	Orifice No.	Manifold Pressure	Orifice No.	Manifold Pressure	Orifice No.	Manifold Pressure
U.S.A. Only		**650**	43	3.8	42	3.2	42	3.4	42	3.5
	7001	**675**	43	3.5	43	3.7	43	3.8	42	3.2
	(2134)	**700**	44	3.8	43	3.4	43	3.5	43	3.6
	to	**725**	44	3.5	44	3.6	44	3.8	43	3.4
		750	44	3.3	44	3.4	44	3.5	44	3.6
	8000	**775**	**45**	**3.7**	44	3.2	44	3.3	44	3.4
	(2438)	**800**	**45**	**3.5**	**45**	**3.6**	**45**	**3.7**	44	3.2
		825	**45**	**3.3**	**45**	**3.4**	**45**	**3.5**	**45**	**3.6**
U.S.A. Only		**625**	43	3.8	42	3.2	42	3.3	42	3.4
	8001	**650**	43	3.5	43	3.6	43	3.8	42	3.2
	(2439)	**675**	44	3.7	43	3.4	43	3.5	43	3.6
	to	**700**	44	3.5	44	3.6	44	3.7	44	3.8
		725	44	3.2	44	3.4	44	3.5	44	3.6
	9000	**750**	**45**	**3.7**	**45**	**3.8**	44	3.2	44	3.3
	(2743)	**775**	**45**	**3.4**	**45**	**3.6**	**45**	**3.7**	**45**	**3.8**
U.S.A. Only	**9001**	**600**	43	3.8	42	3.2	42	3.3	42	3.4
	(2744)	**625**	43	3.5	43	3.6	43	3.7	43	3.8
	to	**650**	44	3.7	44	3.8	43	3.4	43	3.6
		675	44	3.4	44	3.5	44	3.7	44	3.8
	10000	**700**	44	3.2	44	3.3	44	3.4	44	3.5
	(3048)	**725**	**45**	**3.6**	**45**	**3.7**	**45**	**3.8**	44	3.3

* Orifice numbers shown in **BOLD** are factory-installed.

A08606B

Percents of derate are based on midpoint of U.S. altitude ranges.

PG9MAB

Table 15 – Model PG9MAB Orifice Size and Manifold Pressure for Correct Input

FOR USE WITH 140 SIZE FURNACES ONLY

(TABULATED DATA BASED ON 23,000 BTUH PER BURNER, DERATED 2%/1000 FT (305M) ABOVE SEA LEVEL)

ALTITUDE RANGE ft (m)		AVG. GAS HEAT VALUE AT ALTITUDE (Btu/cu ft)	SPECIFIC GRAVITY OF NATURAL GAS							
			0.58		0.60		0.62		0.64	
			Orifice No.	Manifold Pressure	Orifice No.	Manifold Pressure	Orifice No.	Manifold Pressure	Orifice No.	Manifold Pressure
U.S.A. and Canada	0 (0) to 2000 (610)	900	42	3.8	41	3.6	41	3.7	41	3.8
		925	42	3.6	42	3.7	41	3.5	41	3.6
		950	42	3.4	42	3.6	42	3.7	42	3.8
		975	42	3.3	42	3.4	42	3.5	42	3.6
		1000	**43**	**3.8**	42	3.2	42	3.3	42	3.4
		1025	**43**	**3.6**	**43**	**3.7**	**43**	**3.8**	42	3.3
		1050	**43**	**3.4**	**43**	**3.5**	**43**	**3.7**	**43**	**3.8**
		1075	**43**	**3.3**	**43**	**3.4**	**43**	**3.5**	**43**	**3.6**
		1100	44	3.6	**43**	**3.2**	**43**	**3.3**	**43**	**3.4**
U.S.A. and Canada	U.S.A. 2001 (611) to 3000 (914) Canada 2001 (611) to 4500 (1372)	800	41	3.7	40	3.5	40	3.7	40	3.8
		825	41	3.5	41	3.6	41	3.7	40	3.6
		850	42	3.7	42	3.8	41	3.5	41	3.6
		875	42	3.5	42	3.6	42	3.7	42	3.8
		900	42	3.3	42	3.4	42	3.5	42	3.6
		925	**43**	**3.8**	42	3.2	42	3.3	42	3.4
		950	**43**	**3.6**	**43**	**3.7**	**43**	**3.8**	42	3.2
		975	**43**	**3.4**	**43**	**3.5**	**43**	**3.6**	**43**	**3.7**
		1000	**43**	**3.2**	**43**	**3.3**	**43**	**3.4**	**43**	**3.6**
U.S.A. Only	3001 (915) to 4000 (1219)	775	41	3.7	41	3.8	40	3.6	40	3.7
		800	42	3.8	41	3.6	41	3.7	41	3.8
		825	42	3.6	42	3.7	42	3.8	41	3.6
		850	42	3.4	42	3.5	42	3.6	42	3.7
		875	42	3.2	42	3.3	42	3.4	42	3.5
		900	**43**	**3.7**	**43**	**3.8**	42	3.2	42	3.3
		925	**43**	**3.5**	**43**	**3.6**	**43**	**3.7**	**43**	**3.8**
		950	**43**	**3.3**	**43**	**3.4**	**43**	**3.5**	**43**	**3.6**
U.S.A. Only	4001 (1220) to 5000 (1524)	750	41	3.6	41	3.7	40	3.6	40	3.7
		775	42	3.8	41	3.5	41	3.6	41	3.7
		800	42	3.5	42	3.6	42	3.8	41	3.5
		825	42	3.3	42	3.4	42	3.5	42	3.7
		850	**43**	**3.8**	42	3.2	42	3.3	42	3.4
		875	**43**	**3.6**	**43**	**3.7**	**43**	**3.8**	42	3.3
		900	**43**	**3.4**	**43**	**3.5**	**43**	**3.6**	**43**	**3.7**
		925	**43**	**3.2**	**43**	**3.3**	**43**	**3.4**	**43**	**3.5**
U.S.A. Only	5001 (1525) to 6000 (1829)	725	41	3.6	41	3.7	41	3.8	40	3.6
		750	42	3.7	42	3.8	41	3.6	41	3.7
		775	42	3.5	42	3.6	42	3.7	42	3.8
		800	42	3.2	42	3.4	42	3.5	42	3.6
		825	**43**	**3.7**	**43**	**3.8**	42	3.3	42	3.4
		850	**43**	**3.5**	**43**	**3.6**	**43**	**3.7**	42	3.2
		875	**43**	**3.3**	**43**	**3.4**	**43**	**3.5**	**43**	**3.6**
		900	**43**	**3.1**	**43**	**3.2**	**43**	**3.3**	**43**	**3.5**
U.S.A. Only	6001 (1830) to 7000 (2133)	675	41	3.8	40	3.6	40	3.7	40	3.8
		700	41	3.5	41	3.6	41	3.8	40	3.6
		725	42	3.6	42	3.8	41	3.5	41	3.6
		750	42	3.4	42	3.5	42	3.6	42	3.7
		775	42	3.2	42	3.3	42	3.4	42	3.5
		800	**43**	**3.6**	**43**	**3.8**	42	3.2	42	3.3
		825	**43**	**3.4**	**43**	**3.5**	**43**	**3.7**	**43**	**3.8**
		850	**43**	**3.2**	**43**	**3.3**	**43**	**3.4**	**43**	**3.6**

* Orifice numbers shown in **BOLD** are factory-installed.

A08607A

Percents of derate are based on midpoint of U.S. altitude ranges.

Table 15 - Model PG9MAB Orifice Size and Manifold Pressure for Correct Input (Continued)

FOR USE WITH 140 SIZE FURNACES ONLY

(TABULATED DATA BASED ON 23,000 BTUH PER BURNER, DERATED 2%/1000 FT (305M) ABOVE SEA LEVEL)

ALTITUDE RANGE ft (m)		AVG. GAS HEAT VALUE AT ALTITUDE (Btu/cu ft)	SPECIFIC GRAVITY OF NATURAL GAS							
			0.58		0.60		0.62		0.64	
			Orifice No.	Manifold Pressure	Orifice No.	Manifold Pressure	Orifice No.	Manifold Pressure	Orifice No.	Manifold Pressure
U.S.A. Only	7001 (2134) to 8000 (2438)	**650**	41	3.7	40	3.6	40	3.7	40	3.8
		675	41	3.5	41	3.6	41	3.7	41	3.8
		700	42	3.6	42	3.7	42	3.8	41	3.6
		725	42	3.3	42	3.5	42	3.6	42	3.7
		750	**43**	**3.8**	42	3.2	42	3.3	42	3.4
		775	**43**	**3.6**	**43**	**3.7**	**43**	**3.8**	42	3.2
		800	**43**	**3.3**	**43**	**3.5**	**43**	**3.6**	**43**	**3.7**
		825	**43**	**3.1**	**43**	**3.2**	**43**	**3.4**	**43**	**3.5**
U.S.A. Only	8001 (2439) to 9000 (2743)	**625**	41	3.7	41	3.8	40	3.7	40	3.8
		650	42	3.8	41	3.6	41	3.7	41	3.8
		675	42	3.5	42	3.7	42	3.8	41	3.5
		700	42	3.3	42	3.4	42	3.5	42	3.6
		725	**43**	**3.7**	42	3.2	42	3.3	42	3.4
		750	**43**	**3.5**	**43**	**3.6**	**43**	**3.7**	42	3.2
		775	**43**	**3.3**	**43**	**3.4**	**43**	**3.5**	**43**	**3.6**
U.S.A. Only	9001 (2744) to 10000 (3048)	**600**	41	3.7	41	3.8	40	3.6	40	3.8
		625	42	3.8	41	3.5	41	3.6	41	3.8
		650	42	3.5	42	3.6	42	3.7	41	3.5
		675	42	3.2	42	3.4	42	3.5	42	3.6
		700	**43**	**3.7**	**43**	**3.8**	42	3.2	42	3.3
		725	**43**	**3.4**	**43**	**3.5**	**43**	**3.7**	**43**	**3.8**

* Orifice numbers shown in **BOLD** are factory-installed.

A08607B

Percents of derate are based on midpoint of U.S. altitude ranges.

PG9MAB

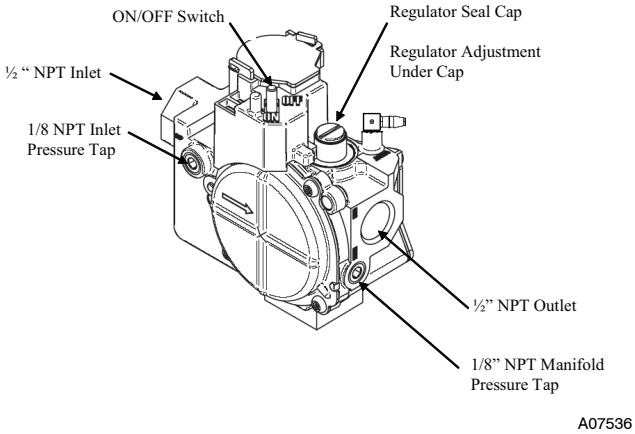

Fig. 48 - Redundant Automatic Gas Valve

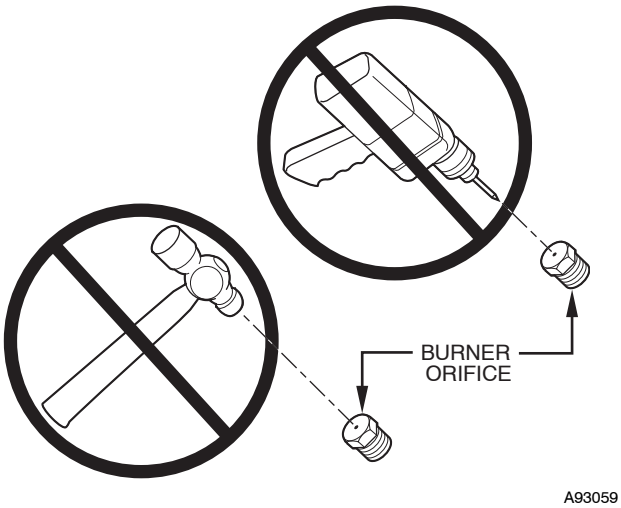

Fig. 49 - Orifice Holes

Table 16 – Altitude Derate Multiplier for U.S.A.

ALTITUDE FT (M)	PERCENT OF DERATE	DERATE MULTIPLIER FACTOR*
0–2000 (305–610)	0	1.00
2001–3000 (610–914)	4–6	0.95
3001–4000 (914–1219)	6–8	0.93
4001–5000 (1219–1524)	8–10	0.91
5001–6000 1524–1829)	10–12	0.89
6001–7000 (1829–2134)	12–14	0.87
7001–8000 2134–2438)	14–16	0.85
8001–9000 2438–2743	16–18	0.83
9001–10,000 2743–3048	18–20	0.81

* Derate multiplier factor is based on midpoint altitude for altitude range.

EXAMPLE: (0 - 2000 ft (0 - 610 M) altitude)
Furnace input from rating plate is 100,000 Btuh.
Btu heating input = Btu/cu ft X cu ft/hr
Heating value of gas = 975 Btu/cu ft
Time for 1 revolution of 2-cu ft dial = 70 sec
Gas rate = 103 cu ft/hr (from Table 17)
Btu heating input = 103 X 975 = 100,425 Btuh
In this example, the orifice size and manifold pressure adjustment is within ±2 percent of the furnace input rate.

SET TEMPERATURE RISE

⚠ CAUTION

UNIT DAMAGE HAZARD

Failure to follow this caution may result in overheating the heat exchangers or condensing flue gases in heat exchanger areas not designed for condensate.

Temperature rise must be within limits specified on unit rating plate. Recommended operation is at midpoint of rise range or slightly above.

Determine and adjust air temperature rise as follows:

1. Place thermometers in return and supply ducts as close to furnace as possible. Be sure thermometers do not see heat exchanger so that radiant heat does not affect readings. This practice is particularly important with straight-run ducts.

Table 17 – Gas Rate (Cu Ft/Hr)

SECONDS FOR 1 REVOLUTION	SIZE OF TEST DIAL			SECONDS FOR 1 REVOLUTION	SIZE OF TEST DIAL		
	1 cu ft	2 cu ft	5 cu ft		1 cu ft	2 cu ft	5 cu ft
10	360	720	1800	**50**	72	144	360
11	327	655	1636	**51**	71	141	355
12	300	600	1500	**52**	69	138	346
13	277	555	1385	**53**	68	136	340
14	257	514	1286	**54**	67	133	333
15	240	480	1200	**55**	65	131	327
16	225	450	1125	**56**	64	129	321
17	212	424	1059	**57**	63	126	316
18	200	400	1000	**58**	62	124	310
19	189	379	947	**59**	61	122	305
20	180	360	900	**60**	60	120	300
21	171	343	857	**62**	58	116	290
22	164	327	818	**64**	56	112	281
23	157	313	783	**66**	54	109	273
24	150	300	750	**68**	53	106	265
25	144	288	720	**70**	51	103	257
26	138	277	692	**72**	50	100	250
27	133	267	667	**74**	48	97	243
28	129	257	643	**76**	47	95	237
29	124	248	621	**78**	46	92	231
30	120	240	600	**80**	45	90	225
31	116	232	581	**82**	44	88	220
32	113	225	563	**84**	43	86	214
33	109	218	545	**86**	42	84	209
34	106	212	529	**88**	41	82	205
35	103	206	514	**90**	40	80	200
36	100	200	500	**92**	39	78	196
37	97	195	486	**94**	38	76	192
38	95	189	474	**96**	38	75	188
39	92	185	462	**98**	37	74	184
40	90	180	450	**100**	36	72	180
41	88	176	439	**102**	35	71	178
42	86	172	429	**104**	35	69	173
43	84	167	419	**106**	34	68	170
44	82	164	409	**108**	33	67	167
45	80	160	400	**110**	33	65	164
46	78	157	391	**112**	32	64	161
47	76	153	383	**116**	31	62	155
48	75	150	375	**120**	30	60	150
49	73	147	367	**124**	29	58	145

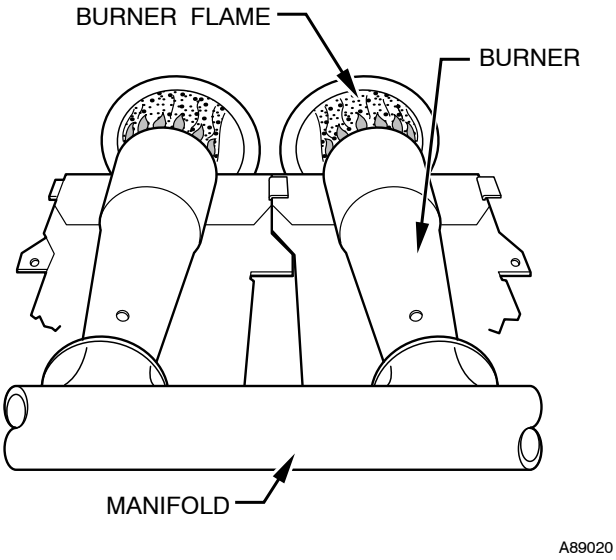

Fig. 50 - Burner Flame

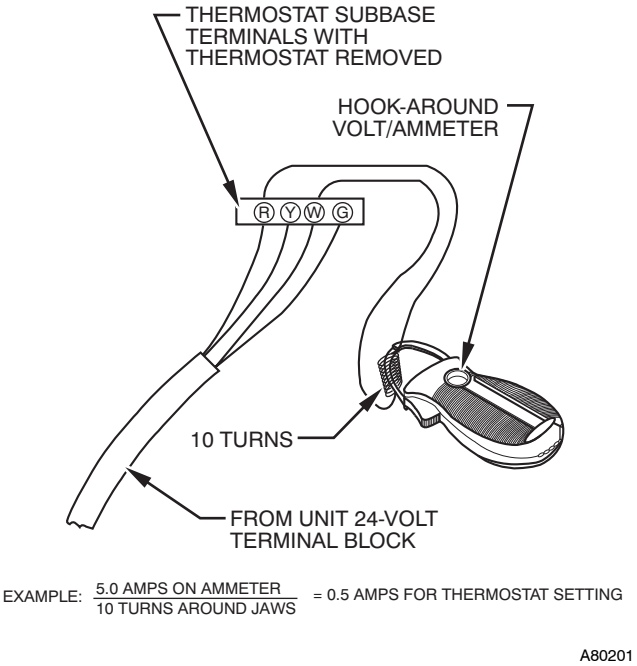

Fig. 51 - Amp Draw Check with Ammeter

2. When thermometer readings stabilize, subtract return-air temperature from supply-air temperature to determine air temperature rise.
3. Adjust temperature rise by adjusting blower speed. Increase blower speed to reduce temperature rise. Decrease blower speed to increase temperature rise.

⚠ WARNING

ELECTRICAL SHOCK HAZARD

Failure to follow this warning could result in personal injury or death.

Disconnect 115-v electrical power before changing speed tap.

4. To change blower motor speed selections for heating mode, remove blower motor lead from control center HEAT terminal. (See Fig. 34.) Select desired blower motor speed lead from 1 of the other motor leads and relocate it to HEAT terminal. See Table 18 for lead color identification. Reconnect original lead on SPARE terminal. Follow this same procedure for proper selection of COOL speed selection.

Table 18 – Speed Selector

COLOR	SPEED	FACTORY SHIPPED CONNECTION
Black	High	Cool
Yellow (When Present)	Medium High	Spare
Blue	Medium Low	Heat
Red	Low	Spare
White	Common	Com

ADJUST BLOWER OFF DELAY (HEAT MODE)

The blower off delay has 4 adjustable settings from 90 sec to 180 sec. (See Table 19.) The blower off delay jumpers are located on the furnace control board. (See Fig. 34.) To change the blower off delay setting, move the jumper from one set of pins on the control board to the pins used for the desired blower off delay. Factory blower off delay setting is 120 sec.

Table 19 – Blower Off Delay Setup Position

PINS	1 AND 2	2 AND 3	3 AND 4	4 AND 5
Time (in sec)	90	120	150	180

SET THERMOSTAT HEAT ANTICIPATOR

When using a nonelectronic thermostat, the thermostat heat anticipator must be set to match the amp draw of the electrical components in R-W circuit. Accurate amp draw readings can be obtained at thermostat subbase terminals R and W. Fig. 51 illustrates the easy method of obtaining actual amp draw. The amp reading should be taken after blower motor has started and furnace is heating. Connect ammeter wires as shown in Fig. 51. The thermostat anticipator should NOT be in the circuit while measuring current. If thermostat has no subbase, the thermostat must be disconnected from R and W wires during current measurement. See thermostat manufacturer's instructions for adjusting heat anticipator and for varying heating cycle length.

For an electronic thermostat, set cycle rate for 3 cycles per hour.

Step 6 - Check Safety Controls

This section covers the safety controls that must be checked before the installation is complete. The flame sensor, gas valve, and pressure switch were all checked in the Start-up procedure section as part of normal operation.

CHECK PRIMARY LIMIT CONTROL

This control shuts off gas control system and energizes air-circulating blower motor if furnace overheats. Recommended method of checking this limit control is to gradually block off return air after furnace has been operating for a period of at least 5 minutes. As soon as limit control has shut off burners, return-air opening should be unblocked to permit normal air circulation. By using this method to check limit control, it can be established that limit is functioning properly and operates if there is a restricted return-air duct or motor failure. If limit control does not function during this test, cause must be determined and corrected.

CHECK PRESSURE SWITCH

This control proves operation of draft inducer. Check switch operation as follows:

1. Turn off 115-v power to furnace.
2. Remove main furnace door and disconnect inducer motor lead wires from wire harness.
3. Turn on 115-v power to furnace.
4. Set thermostat to call for heat and wait 1 minute. When pressure switch is functioning properly, hot surface igniter should NOT glow, and control status code LED flashes a Status Code 31. If hot surface igniter glows when inducer

motor is disconnected, shut furnace down immediately. Determine reason pressure switch did not function properly and correct condition.

5. Turn off 115-v power to furnace.
6. Reconnect inducer motor leads, reinstall main furnace door, and turn on 115-v power supply.

CHECKLIST

1. Put away tools and instruments. Clean up debris.
2. Verify flame rollout manual reset switch has continuity.
3. Verify that blower and main access doors are properly installed.
4. Cycle test furnace with room thermostat.
5. Check operation of accessories per manufacturer's instructions.
6. Review User's Guide with owner.
7. Leave literature packet near furnace.

CHECKLIST - DIRECT VENT (2-PIPE) INSTALLATION

LOAD CALCULATION

_____ Heating Load (Btuh)

_____ Cooling Load (Btuh)

_____ Furnace Model Selection

COMBUSTION AIR AND VENT PIPING

Termination Location

_____ Roof or Sidewall

_____ Termination Kit - 2 Pipe or Concentric

_____ Combustion-Air Pipe Length

_____ Combustion-Air Pipe Elbow Quantity

_____ Vent Pipe Length

_____ Vent Pipe Elbow Quantity

_____ Pipe Diameter Determined from Sizing Table

_____ Pipe Sloped To Furnace

Pipe Insulation

_____ Over Ceilings

_____ Low-Ambient Exposed Pipes

Condensate Drain

_____ Unit Level or Pitched Forward

_____ Internal Tubing Connections Free of Kinks and traps

_____ External Drain Connection Leak Tight and sloped

_____ Condensate Trap Primed before Start-Up

_____ Heat Tape Installed if Required

CHECKLIST - START-UP

_____ Gas Input Rate (Set Within 2 percent of Rating Plate)

_____ Temperature Rise Adjusted

Thermostat Anticipator

_____ Anticipator Setting Adjusted or

_____ Cycle Rate (3 Cycles per Hr) Selected

Safety Controls Check Operation

_____ Primary Limit

_____ Pressure Switch

PG9MAB

CHECKLIST - NON DIRECT VENT (1-PIPE) INSTALLATION

LOAD CALCULATION

_____ Heating Load (Btuh)

_____ Cooling Load (Btuh)

_____ Furnace Model Selection

VENT PIPING

Termination Location

_____ Roof or Sidewall

_____ Vent Pipe Length

_____ Vent Pipe Elbow Quantity

_____ Pipe Diameter Determined from Sizing Table

_____ Pipe Sloped To Furnace

Pipe Insulation

_____ Over Ceilings

_____ Low-Ambient Exposed Pipes

Condensate Drain

_____ Unit Level or Pitched Forward

_____ Internal Tubing Connections Free of Kinks and Traps

_____ External Drain Connection Leak Tight and Sloped

_____ Condensate Trap Primed before Start-Up

_____ Heat Tape Installed if Required

CHECKLIST - START-UP

_____ Gas Input Rate (Set Within 2 percent of Rating Plate)

_____ Temperature Rise Adjusted

Thermostat Anticipator

_____ Anticipator Setting Adjusted or Cycle Rate (3 Cycles per Hr) Selected

Safety Controls Check Operation

_____ Primary Limit

_____ Pressure Switch

©2009 Payne Heating & Cooling Systems ● 7310 W. Morris St. ● Indianapolis, IN 46231 Printed in U.S.A. Edition Date: 06/09

Catalog No: IM–PG9MAB–04

Manufacturer reserves the right to change, at any time, specifications and designs without notice and without obligations.

Replaces: IM–PG9MAB–03