Product Data

A220408

Fig. 1 —Sizes 06K - 36K

NOTE: Images are for illustration purposes **only**. Actual models may differ slightly.

TABLE OF CONTENTS

PAGE
INDUSTRY LEADING FEATURES / BENEFITS 1
MODEL NUMBER NOMENCLATURE 3
STANDARD FEATURES AND ACCESSORIES 4
DIMENSIONS 5
CLEARANCES 9
SPECIFICATIONS 10
PERFORMANCE 11
FAN COILS 13
FURNACES 15
PERFORMANCE 18
AHU PERFORMANCE 29
APPLICATION DATA 33
WIRING 34
ELECTRICAL DATA 36
CONNECTION DIAGRAMS 37
WIRING DIAGRAMS 38
GUIDE SPECIFICATIONS 42

INDUSTRY LEADING FEATURES / BENEFITS

A PERFECT BALANCE BETWEEN BUDGET LIMITS, ENERGY SAVINGS AND COMFORT.

The **38MARB** series ductless systems are a matched combination of an outdoor condensing unit and an indoor fan coil unit connected only by refrigerant tubing and wires.

The ductless system permits creative solutions to design problems such as:

- **Add-ons to current space (an office or family room addition)**
- **Special space requirements**
- **When changes in the load cannot be handled by the existing system**
- **When adding air conditioning to spaces that are heated by hydronic or electric heat and have no ductwork**
- **Historical renovations or any application where preserving the look of the original structure is essential.**

The ideal compliment to your ducted system when it is impractical or prohibitively expensive to use ductwork.

The compact indoor fan coil units take up very little space in the room and do not obstruct windows. The fan coils are attractively styled to blend with most room decors. Advanced system components incorporate innovative technology to provide reliable cooling performance at low sound levels.

Inverter Technology

The inverter driven compressor is designed to run at various input power frequencies (Hz) which controls the compressor's motor speed.

Even Temperature – The control package, including the inverter, monitors the outdoor and indoor temperatures as they relate to the selected indoor set point and adjusts the compressor speed to match the load and keep the system operating continuously rather than cycling and creating temperature swings. This translates to higher comfort levels for the occupants.

Rapid Pull Down/Warm-Up – Comfort is increased by the inverter system's ability to ramp up the compressor speed enabling the system to reach the user selected room temperature set point quicker.

Humidity Control – Running the system for longer periods and continuously varying the compressor speed enhances the humidity control.

Individual Room Comfort

Maximum comfort is provided because each space can be controlled individually based on the usage pattern.

Low Sound Levels

When noise is a concern, ductless systems are the answer. The indoor units are whisper quiet. There are no compressors indoors, either in the conditioned space or directly over it, and there is none of the noise usually generated by air being forced through the ductwork.

When sound ordinances and proximity to neighbors demand quiet operation, the **38MARB** unit is the right choice. With the inverter technology, these units run at lower speeds most of the time resulting in reduced sound levels.

Inverter Technology – Enhanced Economical Operation

Ductless systems are inherently economical to operate. Individual rooms are heated or cooled only when required, and since the air is delivered directly to the space, there is no need to use additional energy to move the air in the ductwork. This economical operation is enhanced further when the inverter system output matches the load resulting in a more efficient system.

Easy-To-Use Controls

The systems have microprocessor-based controls to provide the ultimate in comfort and efficiency. The user friendly wired and wireless remote controls provide the interface between the user and the unit.

Secure Operation

If security is an issue, outdoor and indoor units are connected only by refrigerant piping and wiring to prevent intruders from crawling through ductwork or wall openings. In addition, since the **38MARB** can be installed close to an outside wall, coils are protected from vandals and severe weather.

Fast Installation

This compact ductless system is simple to install. Only wires and piping need to run between the indoor and outdoor units. These units are fast and easy to install ensuring minimal disruption to customers in homes or the workplace. This makes the **38MARB** systems the equipment of choice for retrofit applications.

Simple Servicing and Maintenance

Removing the top panel of the outdoor unit provides immediate access to the control compartment, providing the service technician access to the diagnostic LEDs to facilitate the troubleshooting process. In addition, the draw-thru design of the outdoor unit means that dirt accumulates on the outside surface of the coil. Coils can be cleaned quickly from the inside using a pressure hose and detergent.

On the indoor units, service and maintenance expense is reduced due to the permanent easy to clean filters. Also, error codes are displayed on the front panel to alert the user to certain system malfunctions.

Built-in Reliability

Ductless system indoor and outdoor units are designed to provide years of trouble-free operation. Both the indoor and outdoor units are well protected. Whenever the microprocessor detects abnormal conditions, the unit stops and an error code appears.

Inverter systems provide additional reliability due to the soft start. This refers to the ability of the inverter to start the compressor motor using reduced voltage and reduced current. This feature is beneficial from an electrical standpoint (eliminates current spikes) as well as an overall reliability standpoint due to reduced stress on all associated system components.

Agency Listings

All systems are listed with AHRI (Air conditioning, Heating, and Refrigeration Institute) and are UL certified per UL 60335-2-40 standard.

Manufacturer reserves the right to change, at any time, specifications and designs without notice and without obligations.

MODEL NUMBER NOMENCLATURE

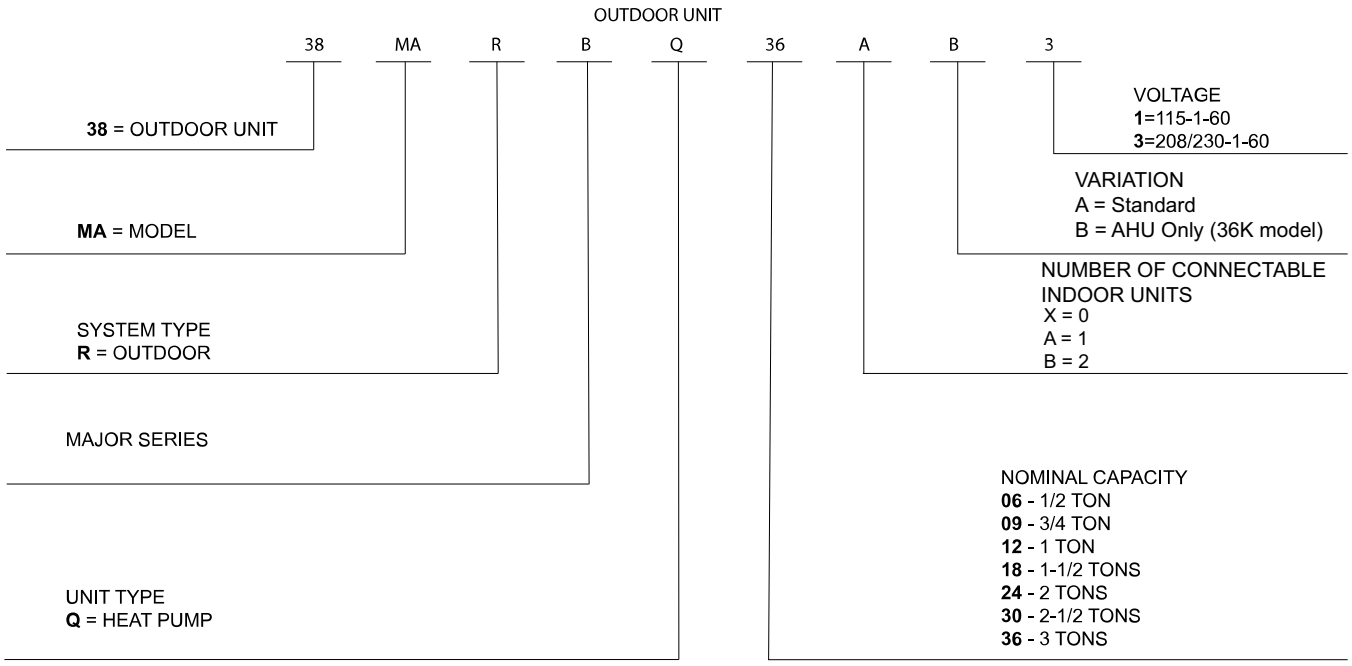

A220411

Use of the AHRI Certified TM Mark indicates a manufacturer's participation in the program For verification of certification for individual products, go to www.ahridirectory.org.

A220412

STANDARD FEATURES AND ACCESSORIES

Ease Of Installation	
Low Voltage Controls	S
Comfort Features	
Microprocessor Controls	S
Auto Restart Function	S
Auto Changeover	S
Energy Saving Features	
Inverter Driven Compressor	S
46° F Heating Mode (Heating Setback)	S
Safety And Reliability	
3 Minute Time Delay For Compressor	S
High Compressor Discharge Temperature	S
Low Voltage Protection	S
Compressor Overload Protection	S
Compressor Over Current Protection	S
IPM Module Protection	S
Condenser High Temp Protection in Cooling Mode	S
Aluminum Hydrophilic pre-coated fins	S
Ease Of Service And Maintenance	
Diagnostics	S
Liquid Line Pressure Taps	S
Application Flexibility	
Crankcase Heater	S
Base pan Heater	S

Legend

- **S - Standard**
- **A - Accessory**

Accessories

Outdoor Unit Model Number	Base Pan Base Rubber Plugs RCD Part No.	Quantity per Unit
38MARBQ12AA1 38MARBQ06AA3 38MARBQ09AA3 38MARBQ12AA3	12600801A00077	13
38MARBQ18AA3	12600801A00077	25
38MARBQ24AA3 38MARBQ30AA3 38MARBQ36AA3 38MARBQ36AB3	12600801A00117	5

NOTE: The base pan is built in with multiple holes for proper draining during the defrost process. For applications where it is required to seal these holes, and re-direct the condensate drain, rubber plugs are available through RCD.

Outdoor Units

Crankcase Unit

The crankcase heater is standard on all unit sizes. Heater clamps must be placed around the compressor oil stump.

Base pan Heater

The base pan heater is standard on all unit sizes.

Manufacturer reserves the right to change, at any time, specifications and designs without notice and without obligations.

DIMENSIONS

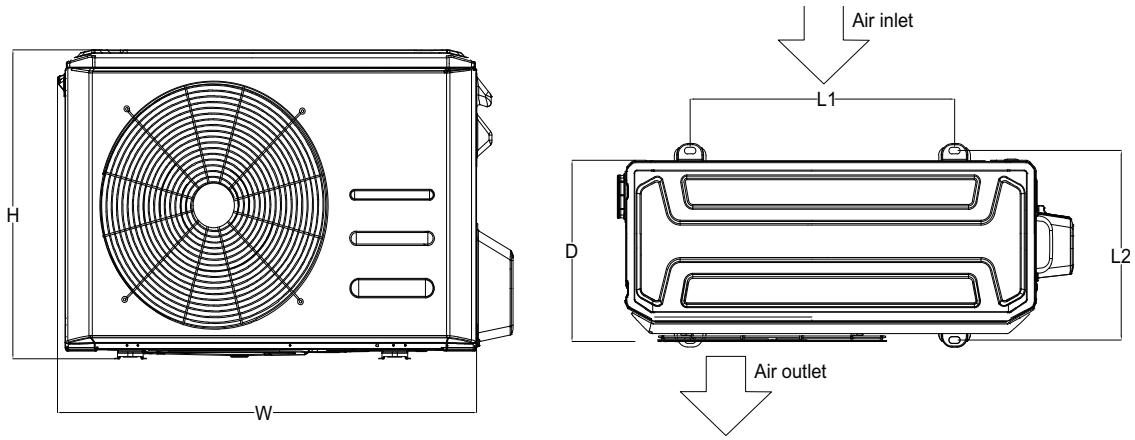

Fig. 2 — Outdoor Unit

SYSTEM SIZE			12K	6K	9K	12K	18K	24K	30K	36K
			(115V)	(208/230V)	(208/230V)	(208/230V)	(208/230V)	(208/230V)	(208/230V)	(208/230V)
OUTDOOR UNIT	**UNIT**									
	Height (H)	in (mm)	21.85 (555)	21.85 (555)	21.81 (554)	21.81 (554)	26.50 (673)	31.89 (810)	31.89(810)	31.89 (810)
	Width (W)	in (mm)	30.12 (765)	30.12 (765)	31.69 (805)	31.69 (805)	35.04 (890)	37.24 (946)	37.24(946)	37.24 (946)
	Depth (D)	in (mm)	11.93 (303)	11.93 (303)	12.99 (330)	12.99 (330)	13.46 (342)	16.14 (410)	16.14(410)	16.14 (410)
	Weight - Net	lbs. (kg)	66.80 (30.3)	63.71(28.9)	74.07 (33.6)	73.63 (33.4)	100.97 (45.8)	134.48 (61)	141.76(64.3)	150.13 (68.1) 155.42 (70.4) ǂ
	L1	in. (mm)	17.81 (452)	17.81 (452)	20.10 (511)	20.10 (511)	26.10 (663)	26.50 (673)	26.50 (673)	26.50 (673)
	L2	in. (mm)	11.25 (286)	11.25 (286)	12.50 (317)	12.50 (317)	13.70 (347)	15.85 (403)	15.85 (403)	15.85 (403)
	PACKAGING									
	Height	in (mm)	24.02 (610)	24.02 (610)	24.21 (615)	24.21 (615)	29.13 (740)	34.84 (885)	34.84(885)	34.84 (885)
	Width	in (mm)	34.92 (887)	34.92 (887)	36.02 (915)	36.02 (915)	39.17 (995)	42.91 (1090)	42.91(1090)	42.91 (1090)
	Depth	in (mm)	13.27 (337)	13.27 (337)	14.57 (370)	14.57 (370)	15.67 (398)	19.69 (500)	19.69(500)	19.69 (500)
	Weight - Gross	lbs. (kg)	72.31 (32.8)	69(31.3)	80.25 (36.4)	79.37 (36)	108.03 (49)	144.40 (65.5)	151.90(68.9)	158.95 (72.1) 166.23 (75.4)ǂ
	Carton Drawing No.	--	877*327*590	877*327*590	905*360*590	905*360*590	985*388*720	1075*485*86	1075*485*86	1075*485*86
	Carton Material	--	Carton Box							
	Material Thickness	in (mm)	0.197 (5)	0.197 (5)	0.197 (5)	0.197 (5)	0.197 (5)	0.295 (7.5)	0.295(7.5)	0.295 (7.5)

NOTE: ǂ AHU only

DIMENSIONS (CONT)

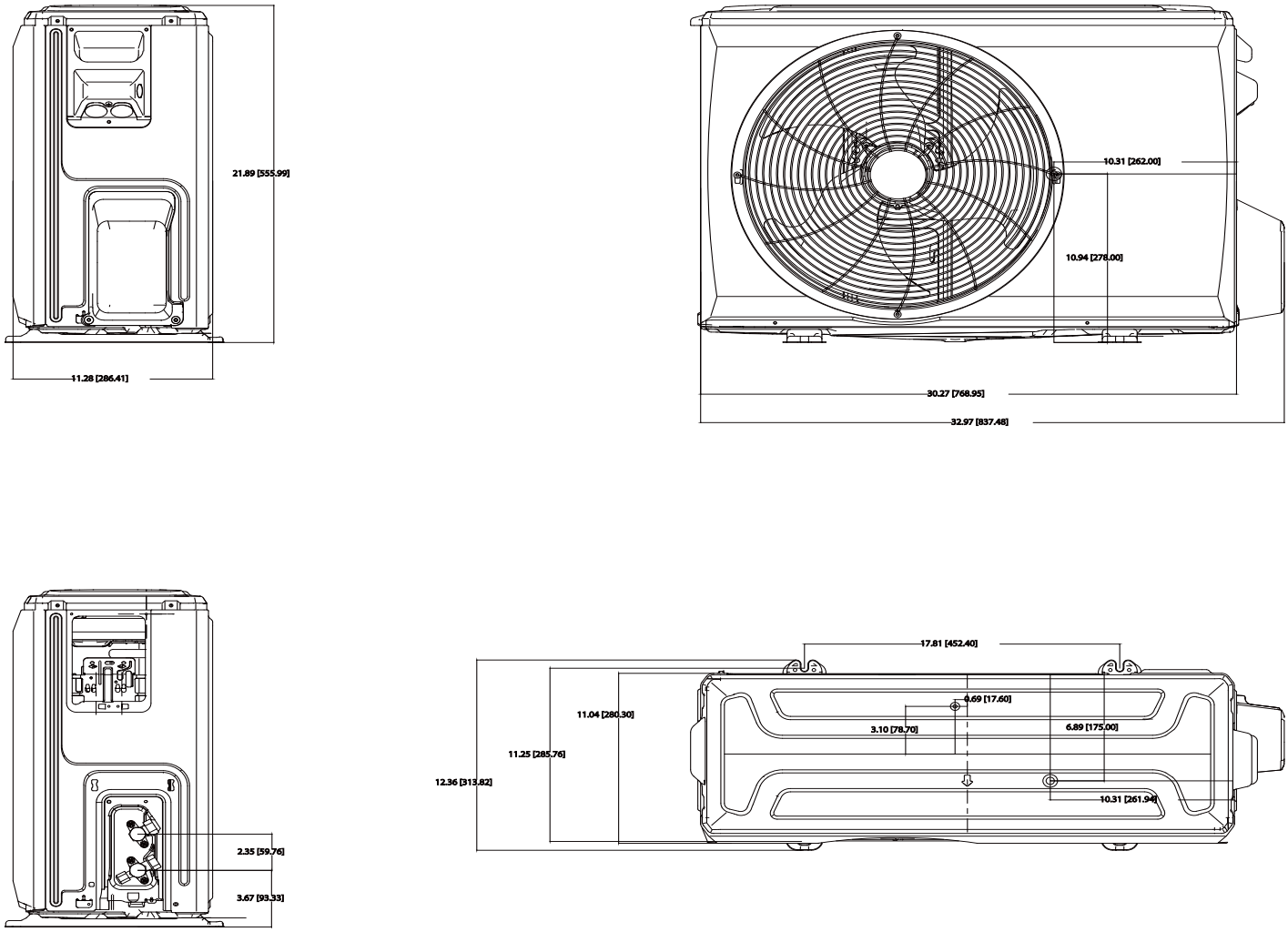

A220415

Fig. 3 —Dimension Sizes 12K (115V) and 6K (208/230V)

DIMENSIONS (CONT)

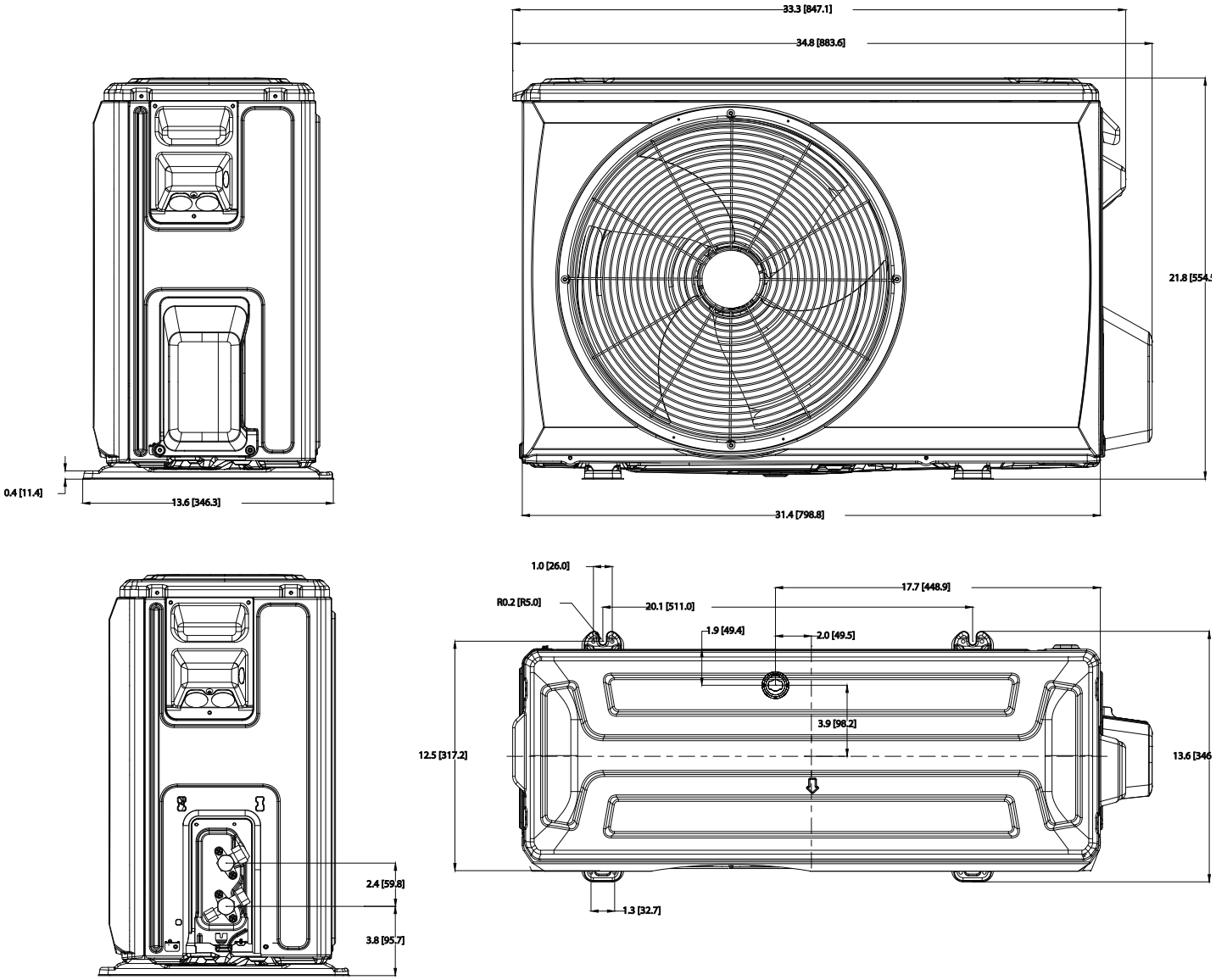

Fig. 4 —Dimension Sizes 09K-12K

DIMENSIONS (CONT)

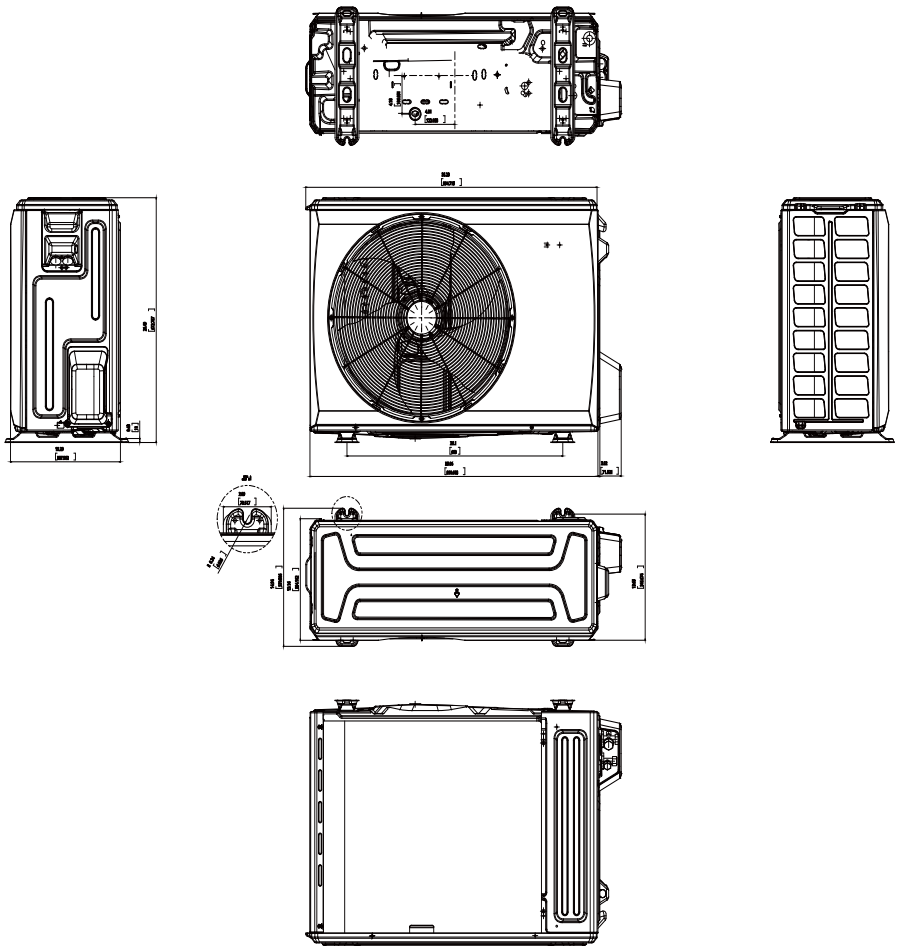

A220417

Fig. 5 —Dimension Size 18K

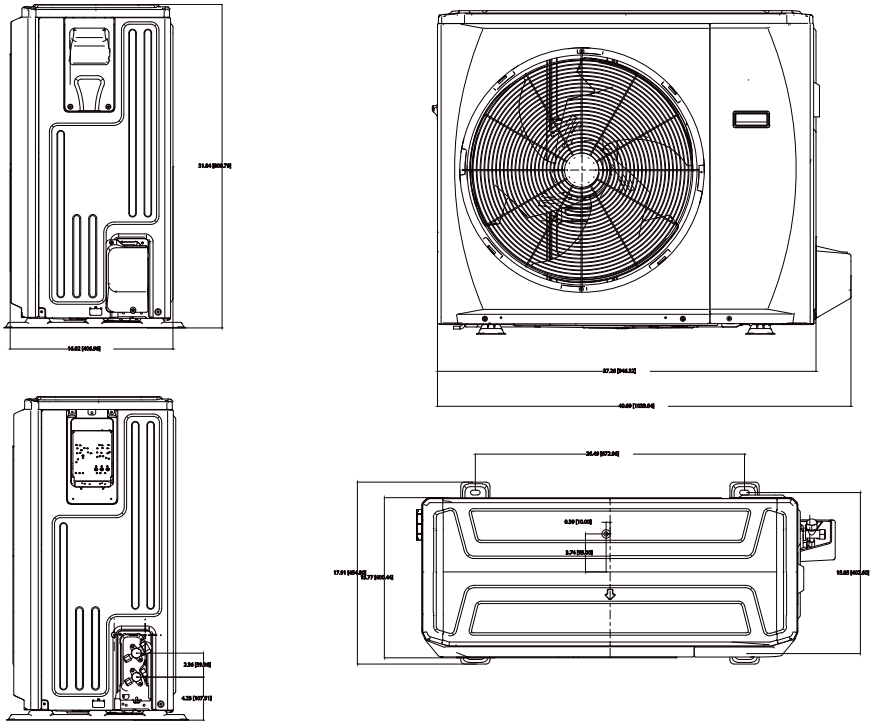

A220418

Fig. 6 —Dimension Sizes 24K, 30K, and 36K

CLEARANCES

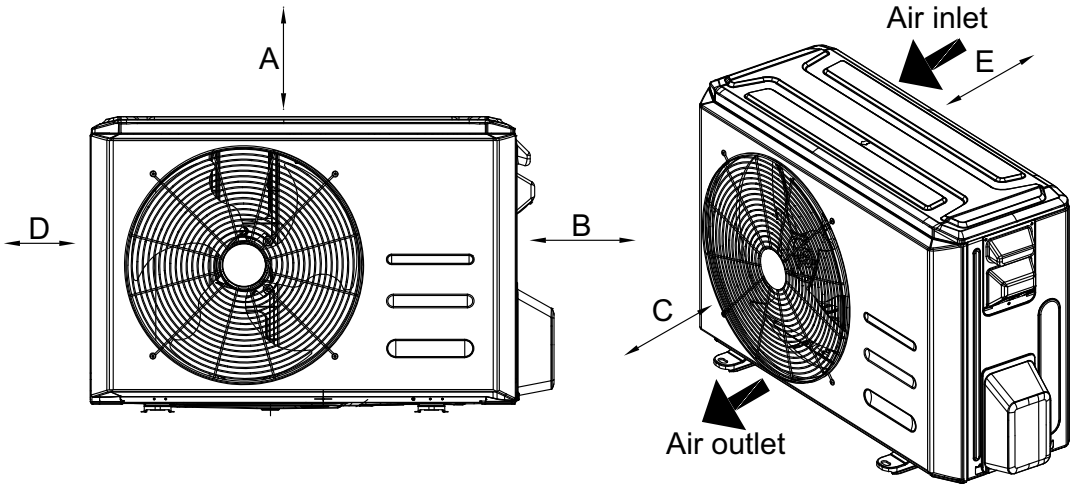

A220419

Fig. 7 —Clearances

UNIT	MINIMUM VALUE in. (mm)
A	24 (610)
B	24 (610)
C	24 (610)
D	4 (101)
E	4 (101)

NOTE: The outdoor unit must be mounted at least 2in (50mm) above the maximum anticipated snow depth.

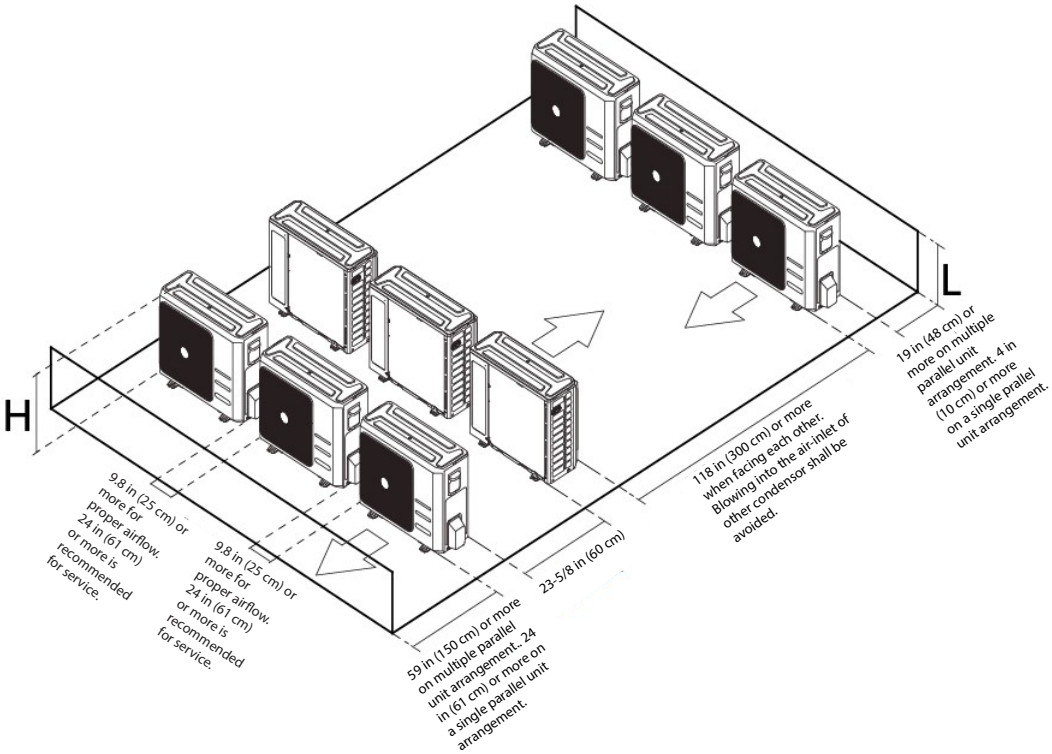

A220421

Fig. 8 —Clearances for multiple units

SPECIFICATIONS

System	Size		12K - 115V	6K	9K	12K - 208/230V	18K	24K	30K	36K	36K - AHU Only
	Outdoor Model		38MARBQ12AA1	38MARBQ06AA3	38MARBQ09AA3	38MARBQ12AA3	38MARBQ18AA3	38MARBQ24AA3	38MARBQ30AA3	38MARBQ36AA3	38MARBQ36AB3
Electrical	Voltage, Phase, Cycle	V/Ph/Hz	115-1-60	208/230-1-60	208/230-1-60	208/230-1-60	208/230-1-60	208/230-1-60	208/230-1-60	208/230-1-60	208/230-1-60
	MCA	A.	19	13	15	15	16	25	23	28	30
	Recommended Fuse Size	A.	20	15	15	15	20	30	25	30	35
	MOCP - Fuse Rating	A.	25	15	15	15	25	35	30	35	45
	Short Circuit Current Rating (SCCR)	kA	2.4	2.4	2.4	2.4	2.4	2.4	2.4	2.4	2.4
Operating Range	Cooling Outdoor DB Min - Max	°F(°C)	-22 ~ 122 (-30 ~ 50)	-22 ~ 122 (-30 ~ 50)	-22 ~ 122 (-30 ~ 50)	-22 ~ 122 (-30 ~ 50)	-22 ~ 122 (-30 ~ 50)	-22 ~ 122 (-30 ~ 50)	-22 ~ 122 (-30 ~ 50)	-22 ~ 122 (-30 ~ 50)	-22 ~ 122 (-30 ~ 50)
	Heating Outdoor DB Min - Max	°F(°C)	-22 ~ 86 (-30 ~ 30)	-22 ~ 86 (-30 ~ 30)	-22 ~ 86 (-30 ~ 30)	-22 ~ 86 (-30 ~ 30)	-22 ~ 86 (-30 ~ 30)	-22 ~ 86 (-30 ~ 30)	-22 ~ 86 (-30 ~ 30)	-22 ~ 86 (-30 ~ 30)	-22 ~ 86 (-30 ~ 30)
Piping	Total Piping Length	ft (m)	82 (25)	82 (25)	82 (25)	82 (25)	98 (30)	164 (50)	164 (50)	213 (65)	213 (65)
	Piping Lift*	ft (m)	32 (10)	32 (10)	32 (10)	32 (10)	65 (20)	82 (25)	82 (25)	98 (30)	98 (30)
	Pipe Connection Size - Liquid	in (mm)	1/4 (6.35)	1/4 (6.35)	1/4 (6.35)	1/4 (6.35)	1/4 (6.35)	3/8 (9.52)	3/8 (9.52)	3/8 (9.52)	3/8 (9.52)
	Pipe Connection Size - Suction	in (mm)	1/2 (12.7)	3/8 (9.52)	3/8 (9.52)	1/2 (12.7)	1/2 (12.7)	5/8 (16)	5/8 (16)	5/8 (16)	5/8 (16)
Refrigerant	Refrigerant Type		R410A	R410A	R410A	R410A	R410A	R410A	R410A	R410A	R410A
	Charge	lbs (kg)	2.47 (1.12)	2.38 (1.08)	2.6 (1.18)	2.6 (1.18)	4.08 (1.85)	5.73 (2.6)	6.06 (2.75)	7.50 (3.40)	7.05 (3.2)
	Additional Refrigerant (between Std & Max Piping Lengths)	Oz/ft (g/m)	0.161 (15)	0.161 (15)	0.161 (15)	0.161 (15)	0.161 (15)	0.322 (30)	0.322 (30)	0.322 (30)	0.322 (30)
	Metering Device		EEV	EEV	EEV	EEV	EEV	EEV	EEV	EEV	EEV
Outdoor Coil	Face Area	Sq. Ft.	4.04	4.04	4.67	4.67	5.9	8.16	8.14	8.14	8.16
	No. Rows		2	2	2	2	2	2	3	3	2
	Fins per inch		21	21	20	20	20	20	18	18	20
	Circuits		4	4	4	4	6	4	6	6	4
Compressor	Type		Rotary Inverter	Rotary Inverter	Rotary Inverter	Rotary Inverter	Rotary Inverter	Rotary Inverter	Rotary Inverter	Rotary Inverter	Rotary Inverter
	Model		KSK103D33UEZ3	KSK103D33UEZ3	KTN110D42UFZ	KTN110D42UFZ	KTM240D43UKT	KTM240D43UKT	KTF250D22UMT	KTF250D22UMT	KTF310D43UMT
	Oil Type		VG74	VG74	VG74	VG74	VG74	VG74	VG74	VG74	VG74
	Oil Charge	Fl. Oz.	10.48	10.48	11.84	11.84	20.97	20.97	22.66	22.66	33.8
	Rated Current	RLA	11.5	6.4	6	8.5	14.25	14.8	15	18	20
Airflow & Sound	Airflow	CFM	794.12	1324	1323.53	1323.53	1764.71	2235.29	2235.29	2235.29	3000
	Sound Pressure	dB(A)	54	54.5	54.5	56	59	62	63	61.5	64

* Condensing unit above or below the indoor unit

NOTE: See the current compatibility chart for list of indoor unit and outdoor unit match ups.

PERFORMANCE

High Wall

	INDOOR MODEL		12K (115V)	6K(208/230V)	9K(208/230V)	12K(208/230V)	18K(208/230V)	24K(208/230V)	30K(208/230V)	36K(208/230V)
High Wall	Energy Star		YES	YES	YES	YES	YES	YES	NO	NO
	Cooling Rated Capacity	Btu/h	12,000	6,000	9,000	12,000	18,000	24,000	30,000	36,000
	Cooling Cap. Range Min - Max	Btu/h	3,500 ~ 13,200	2,500 ~ 11,000	3,300 ~ 13,400	3,300 ~ 14,300	8,870 ~ 19,400	6,850 ~ 27,000	9,070 ~ 30,700	9,300 ~ 38,800
	SEER		23.0	26.5	28.1	25.5	21.5	21.5	20.0	17.5
	EER		13	15.8	16.2	14	12.5	13	11.5	8.5
	Heating Rated Capacity (47°F)	Btu/h	12,100	7,400	11,800	12,000	18,000	29,000	30,000	36,000
	Heating Rated Capacity (17°F)	Btu/h	7,400	4,900	7,500	7,500	10,800	19,800	19,000	22,400
	Heating Maximum Capacity (17°F)	Btu/h	12,200	9,000	12,000	12,000	14,000	24,480	20,670	23,600
	Heating Maximum Capacity (5°F)	Btu/h	7,100	7,500	10,500	12,000	18,000	25,400	17,200	20,400
	Heating Cap. Range Min - Max	Btu/h	5,000 ~ 12,200	3,500 ~ 11,600	5,000 ~ 15,200	5,000 ~ 15,300	8,400 ~ 19,500	8,600 ~ 31,000	8,600 ~ 34,800	11,570 ~ 37,000
	HSPF		11.5	14.0	13.0	13.0	13.0	12.0	9.6	9.0
	COP (47°F)	W/W	3.70	3.90	3.81	3.81	3.10	3.40	2.60	2.51
	COP (17°F)	W/W	2.67	3.05	3.00	3.00	2.80	3.05	2.25	2.18
	COP (5°F)	W/W	2.18	1.90	1.80	1.80	1.80	1.80	1.75	1.75

Cassette

	INDOOR MODEL		9K(208/230V)	12K(208/230V)	18K(208/230V)	24K(208/230V)
Cassette	Energy Star		YES	YES	YES	NO
	Cooling System Tons		0.75	1.00	1.33	2.00
	Cooling Rated Capacity	Btu/h	9,000	12,000	16,000	24,000
	Cooling Cap. Range Min - Max	Btu/h	2,850 ~ 11,100	3,000 ~ 13,700	5,600 ~ 17,000	8,000 ~ 25,000
	SEER		20.5	21.5	20.0	20.0
	EER		13.0	12.7	12.5	11.0
	Heating Rated Capacity (47°F)	Btu/h	10,000	12,000	18,000	24,000
	Heating Rated Capacity (17°F)	Btu/h	6,100	7,900	11,000	14,500
	Heating Maximum Capacity (17°F)	Btu/h	11,800	14,000	21,000	24,200
	Heating Maximum Capacity (5°F)	Btu/h	10,200	11,500	17,000	24,100
	Heating Cap. Range Min - Max	Btu/h	1,800 ~ 12,500	2,000 ~ 15,300	8,700 ~ 21,000	11,800 ~ 27,000
	HSPF		10.8	10.6	10.3	11.6
	COP (47°F)	W/W	2.93	3.22	2.88	3.50
	COP (17°F)	W/W	1.80	2.20	1.80	2.70
	COP (5°F)	W/W	1.80	1.86	1.80	1.80

Ducted

	INDOOR MODEL		9K(208/230V)	12K(208/230V)	18K(208/230V)	24K(208/230V)
Ducted	Energy Star		YES	YES	YES	YES
	Cooling System Tons		0.75	1.0	1.4	2.0
	Cooling Rated Capacity	Btu/h	9,000	12,000	16,500	24,000
	Cooling Cap. Range Min - Max	Btu/h	2,400 ~ 12,500	2,250 ~ 14,400	6,500 ~ 18,800	6,500 ~ 27,800
	SEER		23.0	21.5	19.6	20.6
	EER		14.0	13.0	12.5	12.5
	Heating Rated Capacity (47°F)	Btu/h	10,000	12,000	19,000	24,600
	Heating Rated Capacity (17°F)	Btu/h	6,400	8,300	12,700	14,500
	Heating Maximum Capacity (17°F)	Btu/h	11,600	12,900	21,500	26,500
	Heating Maximum Capacity (5°F)	Btu/h	9,900	12,400	17,800	24,600
	Heating Cap. Range Min - Max	Btu/h	1,700 ~ 15,600	1,800 ~ 16,300	8,900 ~ 22,000	12,200 ~ 32,200
	HSPF		12.0	11.5	11.0	12.6
	COP (47°F)	W/W	3.62	3.52	2.93	3.66
	COP (17°F)	W/W	1.90	2.00	1.90	2.80
	COP (5°F)	W/W	1.80	1.87	1.80	2.01

Manufacturer reserves the right to change, at any time, specifications and designs without notice and without obligations.

Mix Match Ducted

Mix Match Ducted 18K ODU	INDOOR MODEL		24K(208/230V)
	Energy Star		YES
	Cooling System Tons		1.5
	Cooling Rated Capacity	Btu/h	17,500
	Cooling Cap. Range Min - Max	Btu/h	6,500 ~ 22,500
	SEER		20.0
	EER		13.2
	Heating Rated Capacity (47°F)	Btu/h	19,000
	Heating Rated Capacity (17°F)	Btu/h	12,600
	Heating Maximum Capacity (17°F)	Btu/h	21,500
	Heating Maximum Capacity (5°F)	Btu/h	18,000
	Heating Cap. Range Min - Max	Btu/h	9,000 ~ 23,500
	HSPF		11.5
	COP (47°F)	W/W	3.71
	COP (17°F)	W/W	2.78
	COP (5°F)	W/W	1.80

Console

Console	INDOOR MODEL		12K(208/230V)	18K(208/230V)	24K(208/230V)
	Energy Star		YES	YES	NO
	Cooling System Tons		1.0	1.4	2.0
	Cooling Rated Capacity	Btu/h	12,000	17,000	24,000
	Cooling Cap. Range Min - Max	Btu/h	2,800 ~ 13,500	7,800 ~ 19,900	9,000 ~ 26,800
	SEER		23.0	20.2	20.2
	EER		13.0	12.5	11.5
	Heating Rated Capacity (47°F)	Btu/h	12,000	18,000	24,600
	Heating Rated Capacity (17°F)	Btu/h	8,400	12,000	14,500
	Heating Maximum Capacity (17°F)	Btu/h	13,100	20,700	26,661
	Heating Maximum Capacity (5°F)	Btu/h	12,100	16,000	24,894
	Heating Cap. Range Min - Max	Btu/h	2,350 ~ 15,700	8,600 ~ 21,500	12,500 ~ 30,500
	HSPF		11.5	10.6	11.6
	COP (47°F)	W/W	3.22	3.19	3.52
	COP (17°F)	W/W	2	1.8	2.7
	COP (5°F)	W/W	1.84	1.80	1.80

Air Handler

Air Handler	INDOOR MODEL		18K(208/230V)	24K(208/230V)	30K(208/230V)	36K(208/230V)‡
	Energy Star		YES	YES	NO	NO
	Cooling System Tons		1.5	1.9	2.5	3.0
	Cooling Rated Capacity	Btu/h	18,000	23,000	30,000	36,000
	Cooling Cap. Range Min - Max	Btu/h	6,8000 ~ 20,000	7,500 ~ 26,000	9,500 ~ 31,200	11,600 ~ 41,000
	SEER		20.0	21.0	19.0	17.0
	EER		12.5	12.5	11.1	8.8
	Heating Rated Capacity (47°F)	Btu/h	19,000	26,000	30,000	38,000
	Heating Rated Capacity (17°F)	Btu/h	12,000	16,200	19,200	25,600
	Heating Maximum Capacity (17°F)	Btu/h	18,500	23,400	19,600	25,600
	Heating Maximum Capacity (5°F)	Btu/h	18,000	23,000	18,000	20,500
	Heating Cap. Range Min - Max	Btu/h	5,800 ~ 21,000	5,600 ~ 29,000	12,000 ~ 32,000	9,200 ~ 43,000
	HSPF		10.0	11.6	10.0	11.3
	COP (47°F)	W/W	3.62	3.58	3.26	3.35
	COP (17°F)	W/W	2.34	2.80	2.60	2.62
	COP (5°F)	W/W	1.90	1.95	1.85	1.90

Note: ‡ AHU only

FAN COILS

FB4C Fan Coil

HEAT PUMP SYSTEM			12K	18K	24K	30K	36K
FB4C Fan Coil	**Indoor Model**		**FB4CNF018L**	**FB4CNF018L**	**FB4CNF024L**	**FB4CNF030L**	**FB4CNF036L**
	Indoor Model 2		**FB4CNP018L**	**FB4CNP018L**	**FB4CNP024L**	**FB4CNP030L**	**FB4CNP036L**
	Energy Star		NO	NO	NO	NO	NO
	Cooling System Tons		1.0	1.5	1.8	2.4	2.9
	Cooling Rated Capacity	Btu/h	12,100	18,200	21,600	28,400	34,200
	Cooling Cap. Range Min - Max	Btu/h	7,300 ~ 14,800	13,900 ~ 21,400	11,100 ~ 26,400	14,200 ~ 32,400	13,700 ~ 41,500
	SEER		17.5	19/17	15.5	17.5	14.5
	EER		11.1	12.0	11.7	10.5	9.8
	Heating Rated Capacity (47°F)	Btu/h	13,500	18,900	26,200	28,400	35,600
	Heating Rated Capacity (17°F)	Btu/h	7,200	14,700	16,100	19,100	20,000
	Heating Cap. Range Min - Max	Btu/h	5,500 ~ 14,700	11,500 ~ 20,600	11,900 ~ 28,600	11,000 ~ 31,000	10,400 ~ 38,800
	HSPF		9.0	10.5	9.5	11.5	8.2
	COP (47°F)	W/W	3.74	3.86	3.34	3.34	3.16
	COP (17°F)	W/W	2.36	3.24	2.28	2.58	2.26

FM4AX Fan Coil

HEAT PUMP SYSTEM			12K	18K	24K	30K	36K
FM4AX Fan Coil	**Indoor Model**		**FMA4X18**AL***	**FMA4X18**AL***	**FMA4X24**AL***	**FMA4X30**AL***	**FMA4X36**AL***
	Energy Star		NO	NO	NO	NO	NO
	Cooling System Tons		1.1	1.5	1.8	2.5	2.9
	Cooling Rated Capacity	Btu/h	12,700	18,000	22,000	29,600	34,800
	Cooling Cap. Range Min - Max	Btu/h	7,800 ~ 15,700	13,800 ~ 21,200	11,400 ~ 26,900	15,000 ~ 33,700	14,100 ~ 42,200
	SEER		15.5	17.0	15.0	16.5	15
	EER		11.1	11.8	11.8	10.7	10.0
	Heating Rated Capacity (47°F)	Btu/h	13,700	19,200	26,200	29,200	36,400
	Heating Rated Capacity (17°F)	Btu/h	7,200	15,000	16,000	19,400	20,200
	Heating Cap. Range Min - Max	Btu/h	5,700 ~ 14,900	11,600 ~ 20,900	11,900 ~ 28,600	11,400 ~ 31,800	10,600 ~ 39,700
	HSPF		9.5	11.0	10.0	12.0	9.0
	COP (47°F)	W/W	4.06	3.86	3.54	3.74	3.38
	COP (17°F)	W/W	2.48	3.30	2.40	2.80	2.44

FX4D Fan Coil

HEAT PUMP SYSTEM			12K	18K	24K	30K	36K
FX4D Fan Coil	**Indoor Model**		**FX4DNF019L**	**FX4DNF019L**	**FX4DNF025L**	**FX4DNF031L**	**FX4DN(B,F)037L**
	Energy Star		NO	NO	NO	NO	NO
	Cooling System Tons		1.1	1.5	1.9	2.4	2.9
	Cooling Rated Capacity	Btu/h	12,900	18,500	22,200	28,200	35,000
	Cooling Cap. Range Min - Max	Btu/h	8,100 ~ 16,000	14,000 ~ 21,800	11,400 ~ 27,100	14,100 ~ 32,100	13,900 ~ 42,200
	SEER		17.0	18.0	15.5	17.0	16
	EER		11.6	12.2	12.1	10.6	10.3
	Heating Rated Capacity (47°F)	Btu/h	13,400	18,500	25,400	27,800	34,400
	Heating Rated Capacity (17°F)	Btu/h	7,200	14,500	15,500	18,800	19,000
	Heating Cap. Range Min - Max	Btu/h	5,600 ~ 14,600	11,400 ~ 20,200	11,700 ~ 27,700	10,800 ~ 30,300	9,900 ~ 37,500
	HSPF		9.5	10.5	10.5	11.5	8.5
	COP (47°F)	W/W	4.14	3.90	3.72	3.28	3.22
	COP (17°F)	W/W	2.50	3.26	2.64	2.58	2.30

Manufacturer reserves the right to change, at any time, specifications and designs without notice and without obligations.

FV4C Fan Coil

	HEAT PUMP SYSTEM		12K	18K	24K	30K	36K
FV4C Fan Coil	**Indoor Model**		**FV4CNF002L**	**FV4CNF002L**	**FV4CNF002L**	**FV4CN(B,F)003L**	**FV4CN(B,F)003L**
	Energy Star		NO	NO	NO	NO	NO
	Cooling System Tons		1.0	1.5	1.9	2.4	3.0
	Cooling Rated Capacity	Btu/h	11,500	17,400	22,200	29,000	35,600
	Cooling Cap. Range Min - Max	Btu/h	7,800 ~ 15,700	14,100 ~ 21,400	11,100 ~ 26,400	14,100 ~ 32,400	13,700 ~ 41,500
	SEER		16.5	16.0	14.9	16.0	15.4
	EER		11.7	11.5	11.4	10.7	9.3
	Heating Rated Capacity (47°F)	Btu/h	11,500	17,100	24,400	29,400	3,700
	Heating Rated Capacity (17°F)	Btu/h	6,200	13,400	15,200	19,200	21,800
	Heating Cap. Range Min - Max	Btu/h	5,500 ~ 14,600	11,700 ~ 21,000	11,900 ~ 28,600	11,400 ~ 31,400	10,400 ~ 38,800
	HSPF		10.0	10.5	11.0	11.0	9.9
	COP (47°F)	W/W	3.65	3.65	3.85	3.25	3.10
	COP (17°F)	W/W	2.15	3.25	2.80	2.50	2.30

FMC-FMU Fan Coil

	HEAT PUMP SYSTEM		12K	18K	24K	30K	36K
FMC-FMU Fan Coil	**Indoor Model**		**FM(C,U)4Z18**AL***	**FM(C,U)4Z18**AL***	**FM(C,U)4Z24**AL***	**FM(C,U)4Z30**AL***	**FM(C,U)4Z36**AL***
	Energy Star		NO	NO	NO	NO	NO
	Cooling System Tons		1.1	1.5	1.8	2.4	2.9
	Cooling Rated Capacity	Btu/h	13,000	18,500	22,000	28,800	34,600
	Cooling Capacity Range Min - Max	Btu/h	8,100 ~ 16,000	14,100 ~ 21,800	11,500 ~ 26,900	14,500 ~ 32,800	14,200 ~ 42,200
	SEER		17.0	19.0	15.5	17.5	15.5
	EER		11.6	12.2	12.0	10.7	10.1
	Heating Rated Capacity (47°F)	Btu/h	13,600	19,300	26,200	28,800	36,200
	Heating Rated Capacity (17°F)	Btu/h	7,200	15,000	16,100	19,200	20,200
	Heating Capacity Range Min - Max	Btu/h	5,600 ~ 14,600	11,700 ~ 21,000	11,800 ~ 28,600	11,100 ~ 31,400	10,500 ~ 39,500
	HSPF		10.0	11.5	10.0	12.5	9.0
	COP (47°F)	W/W	4.16	4.04	3.42	3.54	3.36
	COP (17°F)	W/W	2.52	3.40	2.28	2.76	2.44

Manufacturer reserves the right to change, at any time, specifications and designs without notice and without obligations.

FURNACES

58S(B,C) Furnaces

58S(B,C) Furnace	Indoor Model		58S(B,C)*A045E14**12				
	Energy Star		NO	NO	NO	NO	NO
	Cooling System Tons		1.0	1.6	1.9	2.4	2.9
	Cooling Rated Capacity	Btu/h	12,500	18,600	22,600	28,600	34,800
	Cooling Cap. Range Min - Max	Btu/h	7,700 ~ 15,400	14,000 ~ 21,800	11,500 ~ 27,600	14,300 ~ 32,600	13,600 ~ 42,000
	SEER		16.0	18.0	15.5	16.0	14.5
	EER		11.2	12.4	12.1	10.3	10.0
	Heating Rated Capacity (47°F)	Btu/h	13,600	18,800	26,000	28,600	34,800
	Heating Rated Capacity (17°F)	Btu/h	7,200	14,700	16,000	19,200	19,300
	Heating Cap. Range Min - Max	Btu/h	5,600 ~ 14,800	11,400 ~ 20,500	11,900 ~ 28,300	11,200 ~ 31,200	10,200 ~ 37,900
	HSPF		9.0	11.0	10.5	11.0	8.5
	COP (47°F)	W/W	4.00	3.86	3.84	3.38	3.20
	COP (17°F)	W/W	2.44	3.28	2.68	2.58	2.28

58SU Furnaces

58SU Furnace	Indoor Model		58SU*A040E17**12				
	Energy Star		NO	NO	NO	NO	NO
	Cooling System Tons		1.0	1.5	1.9	2.4	3.0
	Cooling Rated Capacity	Btu/h	12,500	18,300	22,400	28,600	35,600
	Cooling Cap. Range Min - Max	Btu/h	7,700 ~ 15,500	13,800 ~ 21,400	11,500 ~ 27,400	14,400 ~ 32,600	13,900 ~ 42,900
	SEER		17.5	18.0	16.0	17.0	15.0
	EER		11.5	12.4	12.3	10.7	10.2
	Heating Rated Capacity (47°F)	Btu/h	13,500	18,400	25,600	28,200	35,200
	Heating Rated Capacity (17°F)	Btu/h	7,100	14,500	15,500	19,000	19,600
	Heating Cap. Range Min - Max	Btu/h	5,600 ~ 14,700	11,200 ~ 20,100	11,700 ~ 27,900	10,900 ~ 30,700	10,200 ~ 38,400
	HSPF		9.5	11.0	11.0	11.5	8.5
	COP (47°F)	W/W	4.12	3.74	3.86	3.40	3.34
	COP (17°F)	W/W	2.54	3.24	2.74	2.60	2.34

58TP Furnaces

58TP Furnace	Indoor Model		58TP*A045V14**12				
	Energy Star		NO	NO	NO	NO	NO
	Cooling System Tons		1.1	1.5	1.9	2.4	2.9
	Cooling Rated Capacity	Btu/h	12,600	18,500	22,200	28,400	34,800
	Cooling Cap. Range Min - Max	Btu/h	7,800 ~ 15,600	13,900 ~ 21,700	11,400 ~ 27,400	14,200 ~ 32,400	13,600 ~ 42,000
	SEER		17.0	18.0	15.5	16.5	14.5
	EER		11.4	12.4	12.1	10.4	10.0
	Heating Rated Capacity (47°F)	Btu/h	13,500	18,600	25,800	28,400	35,200
	Heating Rated Capacity (17°F)	Btu/h	7,200	14,600	15,700	19,100	19,700
	Heating Cap. Range Min - Max	Btu/h	5,600 ~ 14,700	11,300 ~ 20,300	11,800 ~ 28,100	11,000 ~ 31,000	10,300 ~ 38,400
	HSPF		9.5	11.0	10.5	11.0	8.5
	COP (47°F)	W/W	4.04	3.82	3.78	3.34	3.20
	COP (17°F)	W/W	2.46	3.28	2.66	2.56	2.30

Manufacturer reserves the right to change, at any time, specifications and designs without notice and without obligations.

59SC2 Furnaces

59SC2 Furnace	Indoor Model		59SC2D060E14**12				
	Energy Star		NO	NO	NO	NO	NO
	Cooling System Tons		1.1	1.6	1.9	2.4	2.9
	Cooling Rated Capacity	Btu/h	12,700	18,700	22,600	28,800	34,800
	Cooling Cap. Range Min - Max	Btu/h	7,900 ~ 15,700	14,000 ~ 21,900	11,500 ~ 27,800	14,400 ~ 32,800	13,700 ~ 42,200
	SEER		17.0	18.0	15.0	16.0	14.5
	EER		11.5	12.4	12.1	10.4	10.0
	Heating Rated Capacity (47°F)	Btu/h	13,500	18,800	26,000	28,600	35,200
	Heating Rated Capacity (17°F)	Btu/h	7,200	14,700	16,000	19,200	19,800
	Heating Cap. Range Min - Max	Btu/h	5,600 ~ 14,700	11,400 ~ 20,500	11,900 ~ 28,300	11,200 ~ 31,200	10,300 ~ 38,400
	HSPF		9.5	11.0	10.5	11.0	8.5
	COP (47°F)	W/W	4.18	3.88	3.86	3.42	3.22
	COP (17°F)	W/W	2.54	3.30	2.68	2.58	2.30

59SC5 Furnaces

59SC5 Furnace	Indoor Model		59SC5B060E14**12			
	Energy Star		NO	NO	NO	NO
	Cooling System Tons		1.1	1.5	1.9	2.4
	Cooling Rated Capacity	Btu/h	12,900	18,400	23,000	29,200
	Cooling Cap. Range Min - Max	Btu/h	8,000 ~ 15,800	14,000 ~ 21,700	11,600 ~ 28,300	14,300 ~ 33,300
	SEER		15.0	16.5	15.5	15.5
	EER		11.0	11.9	12.2	10.4
	Heating Rated Capacity (47°F)	Btu/h	13,700	19,100	26,200 1.957"	28,600
	Heating Rated Capacity (17°F)	Btu/h	7,300	14,900	16,000	19,300
	Heating Cap. Range Min - Max	Btu/h	5,800 ~ 14,900	11,700 ~ 20,800	11,900 ~ 28,600	11,300 ~ 31,200
	HSPF		9.0	10.5	11.0	11.0
	COP (47°F)	W/W	4.00	3.94	4.08	3.44
	COP (17°F)	W/W	2.40	3.26	2.88	2.62

59SU5 Furnaces

59SU5 Furnace	Indoor Model		59SU5A040E17**12			
	Energy Star		NO	NO	NO	NO
	Cooling System Tons		1.1	1.5	1.9	2.4
	Cooling Rated Capacity	Btu/h	12,600	18,500	22,600	28,200
	Cooling Cap. Range Min - Max	Btu/h	7,800 ~ 15,600	13,900 ~ 21,700	11,500 ~ 27,800	14,200 ~ 32,100
	SEER		17.0	18.0	15.5	16.5
	EER		11.4	12.3	12.1	10.5
	Heating Rated Capacity (47°F)	Btu/h	13,500	18,600	25,800	28,200
	Heating Rated Capacity (17°F)	Btu/h	7,200	14,600	15,700	19,000
	Heating Cap. Range Min - Max	Btu/h	5,600 ~ 14,700	11,300 ~ 20,300	11,800 ~ 28,100	10,900 ~ 30,700
	HSPF		9.5	11.0	11.0	11.5
	COP (47°F)	W/W	4.12	3.80	3.90	3.30
	COP (17°F)	W/W	2.52	3.26	2.72	2.56

Manufacturer reserves the right to change, at any time, specifications and designs without notice and without obligations.

59TP6 Furnaces

59TP6 Furnace	Indoor Model		59TP6B060V17**14				
	Energy Star		NO	NO	NO	NO	NO
	Cooling System Tons		1.1	1.6	1.9	2.4	2.9
	Cooling Rated Capacity	Btu/h	12,700	18,800	22,200	28,400	34,800
	Cooling Cap. Range Min - Max	Btu/h	7,900 ~ 15,700	14,000 ~ 22,000	11,400 ~ 27,100	14,400 ~ 32,400	13,600 ~ 42,200
	SEER		16.5	18.0	15.5	16.5	14.5
	EER		11.3	12.4	12.0	10.4	9.9
	Heating Rated Capacity (47°F)	Btu/h	13,500	18,800	26,000	28,400	35,000
	Heating Rated Capacity (17°F)	Btu/h	7,200	14,700	15,800	19,100	19,600
	Heating Cap. Range Min - Max	Btu/h	5,600 ~ 14,700	11,500 ~ 20,500	11,800 ~ 28,300	11,000 ~ 31,000	10,300 ~ 38,200
	HSPF		9.0	11.0	11.0	11.5	8.2
	COP (47°F)	W/W	4.14	3.90	3.80	3.34	3.20
	COP (17°F)	W/W	2.52	3.26	2.70	2.58	2.28

NOTE: See the current compatibility chart for complete list of outdoor unit and furnace/case coil match ups. For furnaces, actual performance values will vary +/-5% depending on the cased coil selected and installed.

PERFORMANCE

COOLING PERFORMANCE - HIGH WALL

HIGH WALL (Sheet 1 of 2)

MODEL	COOLING Indoor Conditions DB	WB		OUTDOOR CONDITIONS (DB) (-22°F) (-25°C)	-13°F (-25°C)	-4°F (-20°C)	0°F (-17°C)	5°F (-15°C)	17°F (-8°C)	47°F (8°C)	77°F (25°C)	86°F (30°C)	95°F (35°C)	104°F (40°C)	113°F (45°C)	122°F (50°C)
12K (115V)	69.8°F (21°C)	59°F (15°C)	TC	13.55	13.20	12.85	12.18	12.29	11.05	11.23	11.23	10.79	10.79	9.11	7.34	5.20
			SC	10.14	9.88	9.62	8.65	8.73	8.12	8.22	8.22	8.03	8.08	6.84	6.18	5.06
			Input	0.82	0.83	0.83	0.86	0.86	0.93	0.54	0.88	0.84	1.03	1.00	0.89	0.73
	75.2°F (24°C)	62.6°F (17°C)	TC	14.57	14.22	13.87	13.20	13.31	12.08	12.25	12.25	11.81	11.81	10.13	8.36	6.22
			SC	10.55	10.30	10.05	9.56	9.64	8.75	8.87	8.87	8.56	8.56	7.34	6.06	4.50
			Input	0.83	0.84	0.84	0.87	0.87	0.94	0.55	0.89	0.85	1.04	1.01	0.90	0.74
	80.6°F (27°C)	66.2°F (19°C)	TC	15.53	15.18	14.83	14.16	14.27	13.04	13.21	13.21	12.77	12.77	11.09	9.32	7.18
			SC	11.02	10.78	10.53	10.05	10.13	9.25	9.38	9.38	9.07	9.06	7.87	6.62	5.10
			Input	0.85	0.85	0.85	0.89	0.88	0.95	0.56	0.90	0.86	1.06	1.02	0.91	0.76
	89.6°F (32°C)	73.4°F (23°C)	TC	17.30	16.95	16.60	15.93	16.04	14.81	14.98	14.98	14.54	14.54	12.86	11.09	8.95
			SC	11.20	10.98	10.75	10.32	10.39	9.59	9.70	9.70	9.42	9.42	8.33	7.18	5.80
			Input	0.87	0.88	0.88	0.91	0.91	0.98	0.59	0.93	0.89	1.08	1.05	0.94	0.78
6K (208-230V)	69.8°F (21°C)	59°F (15°C)	TC	13.40	13.09	12.77	12.45	12.21	11.37	11.21	10.79	10.56	10.32	9.39	8.30	6.36
			SC	9.63	9.41	9.18	8.52	8.40	7.95	7.92	7.69	7.57	7.41	7.02	6.49	5.60
			Input	0.63	0.65	0.66	0.72	0.75	0.80	0.47	0.68	0.82	0.96	0.97	0.97	0.89
	75.2°F (24°C)	62.6°F (17°C)	TC	14.38	14.06	13.75	13.42	13.19	12.34	12.18	11.76	11.53	11.29	10.37	9.27	7.33
			SC	10.30	10.07	9.84	9.61	9.45	8.84	8.72	8.42	8.26	8.09	7.42	6.64	5.25
			Input	0.63	0.65	0.67	0.73	0.75	0.80	0.47	0.68	0.82	0.96	0.97	0.98	0.89
	80.6°F (27°C)	66.2°F (19°C)	TC	15.32	15.01	14.69	14.37	14.13	13.28	13.12	12.70	12.48	12.24	11.31	10.22	8.28
			SC	10.80	10.58	10.35	10.13	9.96	9.36	9.25	8.95	8.79	8.62	7.97	7.20	5.83
			Input	0.64	0.66	0.68	0.74	0.77	0.81	0.48	0.69	0.83	0.97	0.98	0.99	0.90
	89.6°F (32°C)	73.4°F (23°C)	TC	17.15	16.83	16.52	16.20	15.96	15.11	14.95	14.53	14.30	14.06	13.14	12.05	10.10
			SC	12.14	11.92	11.69	11.46	11.30	10.70	10.58	10.29	10.12	9.96	9.30	8.53	7.15
			Input	0.66	0.68	0.70	0.76	0.79	0.84	0.50	0.71	0.85	0.99	1.01	1.01	0.92
9K (208-230V)	69.8°F (21°C)	59°F (15°C)	TC	12.14	11.96	11.77	10.51	11.00	11.14	11.59	11.12	12.01	11.48	10.21	9.01	5.36
			SC	8.78	8.65	8.52	7.85	8.10	8.22	11.83	8.19	8.57	8.31	7.67	7.06	5.31
			Input	0.20	0.26	0.31	0.26	0.38	0.42	0.59	0.70	1.01	1.10	1.09	1.05	0.68
	75.2°F (24°C)	62.6°F (17°C)	TC	13.10	12.92	12.74	11.47	11.96	12.10	12.56	12.08	12.98	12.45	11.17	9.98	6.33
			SC	9.61	9.48	9.34	8.41	8.77	8.88	9.21	8.86	9.52	9.13	8.19	7.32	4.64
			Input	0.22	0.27	0.32	0.28	0.39	0.43	0.60	0.71	1.03	1.12	1.10	1.07	0.69
	80.6°F (27°C)	66.2°F (19°C)	TC	14.11	13.93	13.75	12.48	12.97	13.11	13.56	13.09	13.98	13.46	12.18	10.99	7.33
			SC	10.20	10.06	9.93	9.02	9.37	9.47	9.80	9.46	10.10	9.72	8.80	7.94	5.30
			Input	0.23	0.28	0.34	0.29	0.40	0.44	0.62	0.73	1.04	1.13	1.12	1.08	0.70
	89.6°F (32°C)	73.4°F (23°C)	TC	16.06	15.88	15.69	14.43	14.92	15.06	15.51	15.04	15.93	15.41	14.13	12.94	9.28
			SC	11.66	11.52	11.39	10.47	10.83	10.93	11.26	10.91	11.56	11.18	10.25	9.39	6.74
			Input	0.26	0.31	0.36	0.32	0.43	0.47	0.64	0.76	1.07	1.16	1.14	1.11	0.73
12K (208-230V)	69.8°F (21°C)	59°F (15°C)	TC	12.51	12.30	12.09	11.16	10.76	11.07	11.85	11.50	12.53	12.19	10.59	8.56	4.48
			SC	8.60	8.46	8.31	8.22	7.93	7.79	8.18	8.05	8.57	8.38	7.67	6.68	4.47
			Input	0.24	0.29	0.34	0.34	0.35	0.48	0.59	0.70	1.00	1.21	1.09	1.07	0.69
	75.2°F (24°C)	62.6°F (17°C)	TC	13.65	13.44	13.23	12.30	11.90	12.21	12.99	12.63	13.67	13.33	11.73	9.70	5.62
			SC	9.37	9.23	9.08	8.44	8.17	8.38	8.92	8.67	9.38	9.15	8.05	6.66	3.85
			Input	0.25	0.30	0.36	0.35	0.37	0.49	0.60	0.71	1.01	1.22	1.10	1.08	0.70
	80.6°F (27°C)	66.2°F (19°C)	TC	14.72	14.51	14.30	13.37	12.97	13.28	14.06	13.70	14.74	14.40	12.80	10.77	6.68
			SC	9.90	9.76	9.62	8.99	8.72	8.93	9.46	9.22	9.91	9.69	8.61	7.24	4.50
			Input	0.27	0.32	0.37	0.37	0.38	0.51	0.61	0.72	1.03	1.23	1.12	1.10	0.72
	89.6°F (32°C)	73.4°F (23°C)	TC	16.73	16.52	16.31	15.38	14.98	15.29	16.07	15.72	16.75	16.41	14.81	12.78	8.70
			SC	10.23	10.10	9.97	9.40	9.16	9.35	9.83	9.61	10.24	10.04	9.06	7.81	5.32
			Input	0.30	0.35	0.40	0.40	0.41	0.54	0.64	0.75	1.06	1.27	1.15	1.13	0.75
18K (208-230V)	69.8°F (21°C)	59°F (15°C)	TC	19.68	19.17	18.67	17.08	17.39	17.95	16.75	12.38	16.82	16.19	14.66	10.42	7.58
			SC	14.77	14.40	14.02	12.25	12.39	12.63	12.34	10.41	12.37	12.16	11.41	9.47	7.43
			Input	0.47	0.54	0.61	0.72	0.72	0.74	0.93	0.77	1.47	1.73	1.88	1.47	1.36
	75.2°F (24°C)	62.6°F (17°C)	TC	21.33	20.82	20.32	18.73	19.04	19.60	18.40	14.03	18.47	17.84	16.31	12.07	9.23
			SC	15.31	14.95	14.58	13.45	13.67	14.07	13.21	10.07	13.26	12.80	11.70	8.67	6.62
			Input	0.51	0.58	0.65	0.76	0.76	0.78	0.97	0.81	1.51	1.77	1.92	1.51	1.40
	80.6°F (27°C)	66.2°F (19°C)	TC	22.85	22.35	21.85	20.26	20.57	21.13	19.93	15.56	20.00	19.37	17.83	13.60	10.75
			SC	15.86	15.51	15.16	14.06	14.28	14.67	13.83	10.80	13.88	13.44	12.38	9.44	7.47
			Input	0.56	0.63	0.70	0.81	0.81	0.83	1.01	0.86	1.56	1.82	1.97	1.56	1.44
	89.6°F (32°C)	73.4°F (23°C)	TC	25.72	25.21	24.71	23.12	23.43	23.99	22.79	18.42	22.86	22.23	20.70	16.46	13.62
			SC	15.84	15.53	15.22	14.24	14.43	14.78	14.04	11.35	14.08	13.69	12.75	10.14	8.39
			Input	0.64	0.71	0.79	0.89	0.89	0.92	1.10	0.94	1.64	1.90	2.05	1.64	1.53

Manufacturer reserves the right to change, at any time, specifications and designs without notice and without obligations.

HIGH WALL (Sheet 2 of 2)

MODEL	COOLING Indoor Conditions DB	WB		OUTDOOR CONDITIONS (DB) (-22°F) (-25°C)	-13°F (-25°C)	-4°F (-20°C)	0°F (-17°C)	5°F (-15°C)	17°F (-8°C)	47°F (8°C)	77°F (25°C)	86°F (30°C)	95°F (35°C)	104°F (40°C)	113°F (45°C)	122°F (50°C)
24K (208-230V)	69.8°F (21°C)	59°F (15°C)	TC	25.33	25.02	24.71	21.71	23.65	21.89	28.18	25.19	24.00	22.65	21.45	18.45	15.41
			SC	18.11	17.89	17.67	15.85	16.72	15.78	19.00	17.47	16.85	16.20	15.56	14.06	12.58
			Input	1.26	1.33	1.40	1.41	1.46	1.79	1.53	1.86	2.04	2.23	2.43	2.31	2.27
	75.2°F (24°C)	62.6°F (17°C)	TC	26.11	25.80	25.49	22.49	24.43	22.67	28.96	25.97	24.78	23.43	22.24	19.23	16.19
			SC	18.93	18.70	18.48	16.31	17.71	16.43	21.00	18.83	17.96	16.99	16.12	13.94	11.73
			Input	1.28	1.34	1.41	1.42	1.48	1.81	1.54	1.87	2.05	2.24	2.44	2.32	2.28
	80.6°F (27°C)	66.2°F (19°C)	TC	26.97	26.66	26.35	23.36	25.29	23.53	29.83	26.84	25.64	24.30	23.10	20.09	17.05
			SC	19.48	19.25	19.03	16.87	18.26	16.99	21.54	19.38	18.51	17.54	16.68	14.51	12.31
			Input	1.29	1.36	1.43	1.44	1.49	1.82	1.55	1.89	2.07	2.26	2.46	2.34	2.30
	89.6°F (32°C)	73.4°F (23°C)	TC	28.76	28.45	28.13	25.14	27.08	25.32	31.61	28.62	27.42	26.08	24.88	21.87	18.83
			SC	20.86	20.63	20.40	18.23	19.64	18.36	22.93	20.76	19.89	18.91	18.05	15.86	13.66
			Input	1.32	1.39	1.46	1.47	1.52	1.85	1.59	1.92	2.10	2.29	2.49	2.37	2.33
30K (208-230V)	69.8°F (21°C)	59°F (15°C)	TC	33.23	32.10	30.97	29.76	28.98	27.43	25.33	20.49	18.99	24.71	23.41	15.64	6.52
			SC	24.05	23.23	22.42	20.12	19.71	18.99	18.02	15.53	14.82	17.89	16.92	13.36	6.52
			Input	0.99	1.08	1.17	1.18	1.27	1.40	1.69	1.34	1.51	3.01	3.31	2.34	1.52
	75.2°F (24°C)	62.6°F (17°C)	TC	36.69	35.56	34.43	33.23	32.44	30.89	28.79	23.96	22.45	28.17	26.87	19.10	9.98
			SC	22.88	22.17	21.47	20.72	20.23	19.26	17.95	14.94	14.00	17.57	16.75	11.91	6.22
			Input	1.96	2.05	2.13	2.15	2.24	2.37	2.66	2.31	2.47	3.98	4.28	3.31	2.49
	80.6°F (27°C)	66.2°F (19°C)	TC	39.85	38.72	37.59	36.38	35.60	34.05	31.95	27.11	25.61	31.33	30.03	22.26	13.14
			SC	23.50	22.83	22.17	21.46	20.99	20.08	18.84	15.99	15.10	18.48	17.71	13.13	7.75
			Input	2.62	2.71	2.79	2.81	2.90	3.03	3.32	2.97	3.13	4.64	4.94	3.97	3.15
	89.6°F (32°C)	73.4°F (23°C)	TC	45.88	44.76	43.63	42.42	41.64	40.09	37.98	33.15	31.64	37.37	36.06	28.29	19.17
			SC	23.96	23.38	22.79	22.16	21.75	20.94	19.84	17.31	16.53	19.52	18.84	14.78	10.01
			Input	3.59	3.68	3.77	3.79	3.87	4.00	4.30	3.94	4.11	5.62	5.92	4.94	4.12
36K (208-230V)	69.8°F (21°C)	59°F (15°C)	TC	34.73	33.79	32.85	31.66	31.22	25.11	29.92	28.89	28.36	29.08	23.61	19.48	7.62
			SC	23.26	22.63	22.01	21.00	20.74	17.58	20.03	19.48	19.16	19.48	16.68	14.65	7.35
			Input	1.23	1.34	1.45	1.31	1.38	1.69	1.97	2.48	2.95	4.20	3.15	2.83	1.49
	75.2°F (24°C)	62.6°F (17°C)	TC	37.72	36.79	35.85	34.66	34.22	28.11	32.91	31.89	31.36	32.07	26.61	22.48	10.62
			SC	24.67	24.05	23.44	22.66	22.38	18.38	21.52	20.85	20.50	20.97	17.40	14.70	6.94
			Input	1.38	1.49	1.61	1.46	1.53	1.84	2.13	2.63	3.10	4.35	3.30	2.98	1.65
	80.6°F (27°C)	66.2°F (19°C)	TC	40.77	39.83	38.90	37.70	37.27	31.16	35.96	34.94	34.41	35.12	29.66	25.52	13.67
			SC	25.89	25.29	24.70	23.94	23.66	19.78	22.83	22.18	21.85	22.30	18.83	16.21	8.68
			Input	1.52	1.64	1.75	1.60	1.68	1.99	2.27	2.78	3.25	4.49	3.44	3.13	1.79
	89.6°F (32°C)	73.4°F (23°C)	TC	46.49	45.55	44.62	43.42	42.99	36.88	41.68	40.66	40.13	40.84	35.38	31.24	19.39
			SC	26.58	26.05	25.51	24.83	24.58	21.09	23.83	23.25	22.94	23.35	20.23	17.87	11.09
			Input	1.80	1.91	2.02	1.88	1.95	2.26	2.54	3.05	3.52	4.77	3.72	3.40	2.06

LEGEND

DB - Dry Bulb
WB - Wet Bulb
TC - Total Net Capacity (1000 Btu/hour)
SC - Sensible Capacity (1000 Btu/hour)
Input - Total Power (kW)

NOTE: Values in grey are extrapolated based on tested performance.

HEATING PERFORMANCE - HIGH WALL

HIGH WALL (Sheet 1 of 2)

MODEL	HEATING		OUTDOOR CONDITIONS (DB)											
	Indoor Conditions DB		-22°F (-30°C)	-13°F (-25°C)	-4°F (-20°C)	0°F (-17°C)	5°F (-15°C)	17°F (-8°C)	19.4°F (-7°C)	24.8°F (-4°C)	32°F (0°C)	39.2°F (4°C)	44.6°F (7°C)	53.6°F (12°C)
12K (115V)	59°F (15°C)	TC	3.46	4.48	5.65	6.48	6.98	9.23	9.60	10.32	12.25	13.45	13.28	13.57
		Input	0.66	0.72	0.78	0.81	0.84	0.94	0.96	0.98	1.11	1.19	1.08	1.06
		COP	1.53	1.82	2.11	2.35	2.45	2.89	2.94	3.10	3.25	3.30	3.59	3.75
	64.4°F (18°C)	TC	3.36	4.38	5.56	6.38	6.89	9.14	9.51	10.22	12.16	13.36	13.19	13.47
		Input	0.73	0.79	0.85	0.87	0.90	1.00	1.02	1.04	1.17	1.26	1.15	1.13
		COP	1.35	1.63	1.92	2.14	2.24	2.67	2.73	2.88	3.04	3.11	3.36	3.51
	69°F (20.5°C)	TC	3.28	4.30	5.48	6.30	6.81	9.06	9.43	10.14	12.08	13.28	13.11	13.39
		Input	0.66	0.72	0.78	0.81	0.84	0.94	0.96	0.98	1.11	1.19	1.08	1.06
		COP	1.53	1.82	2.11	2.35	2.45	2.89	2.94	3.10	3.25	3.30	3.59	3.75
	71.6°F (22°C)	TC	3.26	4.28	5.46	6.28	6.79	9.04	9.41	10.12	12.06	13.26	13.09	13.37
		Input	0.82	0.88	0.94	0.96	0.99	1.09	1.11	1.13	1.26	1.35	1.24	1.21
		COP	1.17	1.43	1.71	1.91	2.01	2.43	2.48	2.63	2.80	2.88	3.10	3.23
6K (208-230V)	59°F (15°C)	TC	4.24	5.47	7.12	8.05	8.19	10.71	10.98	11.79	11.67	12.57	12.46	13.40
		Input	0.77	0.84	0.95	1.01	0.98	1.11	1.14	1.18	1.05	1.09	1.02	1.04
		COP	1.61	1.91	2.20	2.33	2.45	2.82	2.83	2.93	3.25	3.39	3.57	3.77
	64.4°F (18°C)	TC	4.26	5.49	7.14	8.07	8.21	10.73	11.00	11.81	11.69	12.59	12.48	13.41
		Input	0.78	0.84	0.95	1.01	0.98	1.11	1.14	1.18	1.06	1.09	1.02	1.04
		COP	1.61	1.91	2.20	2.33	2.45	2.82	2.83	2.93	3.25	3.39	3.57	3.77
	69°F (20.5°C)	TC	4.28	5.51	7.15	8.08	8.22	10.75	11.02	11.82	11.71	12.60	12.49	13.43
		Input	0.78	0.84	0.95	1.01	0.98	1.12	1.14	1.18	1.06	1.09	1.03	1.04
		COP	1.61	1.91	2.21	2.34	2.45	2.82	2.83	2.93	3.25	3.39	3.57	3.77
	71.6°F (22°C)	TC	4.28	5.52	7.16	8.09	8.23	10.76	11.03	11.83	11.72	12.61	12.50	13.44
		Input	0.78	0.84	0.95	1.01	0.98	1.12	1.14	1.18	1.06	1.09	1.03	1.04
		COP	1.61	1.92	2.21	2.34	2.45	2.82	2.83	2.93	3.25	3.39	3.57	3.77
9K (208-230V)	59°F (15°C)	TC	5.58	7.48	9.57	10.94	11.85	14.20	14.69	14.87	15.40	18.62	15.32	14.72
		Input	1.28	1.39	1.44	1.49	1.53	1.69	1.74	1.78	1.81	2.04	1.35	1.14
		COP	1.28	1.58	1.94	2.15	2.27	2.46	2.48	2.44	2.50	2.67	3.31	3.78
	64.4°F (18°C)	TC	5.62	7.51	9.61	10.97	11.88	14.23	14.73	14.90	15.43	18.65	15.35	14.75
		Input	1.28	1.39	1.44	1.49	1.53	1.69	1.73	1.78	1.80	2.04	1.35	1.14
		COP	1.29	1.59	1.95	2.16	2.28	2.47	2.49	2.45	2.51	2.68	3.32	3.80
	69°F (20.5°C)	TC	5.64	7.54	9.64	11.00	11.91	14.26	14.75	14.93	15.46	18.68	15.38	14.78
		Input	1.28	1.39	1.44	1.49	1.53	1.69	1.73	1.78	1.80	2.04	1.35	1.14
		COP	1.30	1.59	1.96	2.17	2.29	2.47	2.49	2.46	2.51	2.68	3.33	3.81
	71.6°F (22°C)	TC	5.66	7.55	9.65	11.01	11.92	14.27	14.77	14.95	15.48	18.69	15.40	14.80
		Input	1.27	1.39	1.44	1.49	1.53	1.69	1.73	1.78	1.80	2.04	1.35	1.14
		COP	1.30	1.60	1.96	2.17	2.29	2.48	2.50	2.46	2.51	2.68	3.33	3.81
12K (208-230V)	59°F (15°C)	TC	6.58	8.18	10.15	11.59	12.16	13.77	14.16	14.98	16.54	16.71	14.12	14.36
		Input	1.41	1.54	1.65	1.73	1.76	1.64	1.69	1.77	1.84	1.89	1.35	1.11
		COP	1.37	1.55	1.81	1.97	2.03	2.46	2.46	2.48	2.64	2.59	3.06	3.79
	64.4°F (18°C)	TC	6.66	8.26	10.23	11.68	12.24	13.85	14.24	15.43	16.62	16.79	14.20	14.44
		Input	1.41	1.55	1.65	1.74	1.77	1.65	1.69	1.77	1.85	1.90	1.36	1.12
		COP	1.38	1.56	1.81	1.97	2.03	2.47	2.47	2.55	2.64	2.59	3.07	3.79
	69°F (20.5°C)	TC	6.73	8.33	10.30	11.74	12.31	13.92	14.31	15.50	16.69	16.86	14.27	14.51
		Input	1.42	1.55	1.66	1.74	1.77	1.65	1.70	1.78	1.85	1.91	1.36	1.12
		COP	1.39	1.57	1.82	1.98	2.04	2.47	2.47	2.55	2.64	2.59	3.07	3.79
	71.6°F (22°C)	TC	6.77	8.36	10.34	11.78	12.35	13.96	14.35	15.54	16.73	16.90	14.30	14.55
		Input	1.42	1.56	1.66	1.74	1.78	1.65	1.70	1.78	1.86	1.91	1.37	1.13
		COP	1.39	1.57	1.82	1.98	2.04	2.47	2.47	2.55	2.64	2.60	3.07	3.79
18K (208-230V)	59°F (15°C)	TC	11.34	13.58	15.44	16.62	17.80	18.01	23.46	24.84	23.15	21.30	21.96	22.42
		Input	1.92	2.24	2.49	2.74	2.60	2.49	3.34	3.21	2.73	1.95	1.93	1.79
		COP	1.73	1.77	1.82	1.78	2.04	2.08	2.06	2.27	2.49	3.21	3.34	3.68
	64.4°F (18°C)	TC	10.79	13.03	14.88	16.07	17.25	17.08	22.90	24.29	22.60	20.75	21.40	21.87
		Input	1.94	2.26	2.51	2.76	2.61	2.51	3.36	3.23	2.75	1.97	1.95	1.80
		COP	1.63	1.69	1.74	1.71	1.93	2.00	2.00	2.20	2.41	3.09	3.22	3.55
	69°F (20.5°C)	TC	10.19	12.56	14.41	15.60	16.78	16.61	22.43	23.82	22.13	20.28	20.93	21.40
		Input	1.95	2.30	2.54	2.79	2.64	2.52	3.34	3.21	2.73	1.95	1.93	1.79
		COP	1.53	1.60	1.66	1.64	1.86	1.92	2.06	2.27	2.49	3.21	3.34	3.68
	71.6°F (22°C)	TC	9.59	11.84	13.69	14.87	16.06	15.89	21.71	23.10	21.40	19.56	20.21	20.67
		Input	1.97	2.29	2.53	2.78	2.64	2.53	3.39	3.25	2.77	1.99	1.97	1.83
		COP	1.43	1.52	1.58	1.57	1.78	1.84	1.88	2.08	2.26	2.88	3.01	3.31

Manufacturer reserves the right to change, at any time, specifications and designs without notice and without obligations.

HIGH WALL (Sheet 2 of 2)

MODEL	HEATING		OUTDOOR CONDITIONS (DB)											
	Indoor Conditions DB		-22°F (-30°C)	-13°F (-25°C)	-4°F (-20°C)	0°F (-17°C)	5°F (-15°C)	17°F (-8°C)	19.4°F (-7°C)	24.8°F (-4°C)	32°F (0°C)	39.2°F (4°C)	44.6°F (7°C)	53.6°F (12°C)
24K (208-230V)	59°F (15°C)	TC	14.33	18.95	23.61	23.38	25.50	28.25	28.63	29.69	32.33	30.80	29.47	28.35
		Input	2.91	3.17	3.45	3.28	3.59	3.46	3.43	3.66	3.79	3.67	2.63	2.22
		COP	1.44	1.75	2.01	2.09	2.08	2.39	2.45	2.38	2.50	2.46	3.28	3.74
	64.4°F (18°C)	TC	14.33	18.94	23.61	23.38	25.50	28.25	28.62	29.69	32.33	30.79	29.47	28.35
		Input	2.91	3.16	3.45	3.27	3.59	3.46	3.43	3.66	3.79	3.66	2.63	2.22
		COP	1.44	1.75	2.01	2.09	2.08	2.39	2.45	2.38	2.50	2.46	3.28	3.74
	69°F (20.5°C)	TC	14.33	18.94	23.60	23.38	25.50	28.24	28.62	29.69	32.33	30.79	29.47	28.35
		Input	2.91	3.16	3.45	3.27	3.59	3.46	3.43	3.66	3.79	3.66	2.63	2.22
		COP	1.44	1.75	2.01	2.09	2.08	2.39	2.45	2.38	2.50	2.46	3.28	3.75
	71.6°F (22°C)	TC	14.33	18.94	23.60	23.37	25.50	28.24	28.62	29.69	32.33	30.79	29.47	28.35
		Input	2.91	3.16	3.44	3.27	3.59	3.46	3.43	3.66	3.79	3.66	2.63	2.22
		COP	1.44	1.75	2.01	2.09	2.08	2.39	2.45	2.38	2.50	2.46	3.28	3.75
30K (208-230V)	59°F (15°C)	TC	10.11	11.75	14.88	16.44	18.29	22.97	24.15	25.02	28.42	31.70	31.47	32.68
		Input	2.27	2.50	2.53	2.61	2.81	2.89	2.96	3.13	3.32	3.56	3.41	3.18
		COP	1.30	1.38	1.72	1.85	1.91	2.33	2.40	2.34	2.51	2.61	2.70	3.01
	64.4°F (18°C)	TC	10.30	11.93	15.07	16.63	18.48	23.16	24.34	25.21	28.61	31.89	31.66	32.87
		Input	2.29	2.51	2.54	2.62	2.82	2.90	2.97	3.14	3.34	3.57	3.43	3.19
		COP	1.32	1.39	1.74	1.86	1.92	2.34	2.40	2.35	2.51	2.62	2.71	3.02
	69°F (20.5°C)	TC	10.46	12.09	15.23	16.79	18.64	23.32	24.50	25.37	28.77	32.05	31.82	33.03
		Input	2.30	2.52	2.55	2.64	2.84	2.91	2.98	3.15	3.35	3.58	3.44	3.21
		COP	1.33	1.41	1.75	1.87	1.93	2.35	2.41	2.36	2.52	2.62	2.71	3.02
	71.6°F (22°C)	TC	10.55	12.18	15.32	16.88	18.73	23.41	24.59	25.46	28.86	32.14	31.91	33.12
		Input	2.30	2.53	2.56	2.64	2.84	2.92	2.99	3.16	3.36	3.59	3.44	3.21
		COP	1.34	1.41	1.75	1.87	1.93	2.35	2.41	2.36	2.52	2.62	2.72	3.02
36K (208-230V)	59°F (15°C)	TC	13.15	15.06	18.36	21.14	23.41	23.64	24.90	26.17	27.86	32.56	29.75	32.76
		Input	2.86	3.08	3.29	3.47	3.61	3.57	3.64	3.70	3.73	4.14	3.81	3.48
		COP	1.35	1.44	1.64	1.79	1.90	1.94	2.01	2.07	2.19	2.31	2.29	2.76
	64.4°F (18°C)	TC	13.64	15.56	18.85	21.64	23.91	24.14	25.40	26.67	28.35	33.06	30.25	33.25
		Input	1.69	1.78	1.98	2.13	2.24	2.28	2.35	4.04	4.07	4.48	4.16	3.82
		COP	2.37	2.55	2.78	2.97	3.12	3.10	3.17	1.93	2.04	2.16	2.13	2.55
	69°F (20.5°C)	TC	13.64	15.98	19.28	22.06	24.34	24.56	25.83	27.09	28.78	33.48	30.67	33.68
		Input	1.35	1.44	1.64	1.79	1.90	1.94	2.01	3.70	3.73	4.14	3.81	3.48
		COP	2.86	3.08	3.29	3.47	3.61	3.57	3.64	2.07	2.19	2.31	2.29	2.76
	71.6°F (22°C)	TC	15.80	17.71	21.01	23.79	26.07	26.30	27.56	28.83	30.51	35.22	32.41	35.41
		Input	3.67	3.88	4.09	4.27	4.41	4.37	2.81	4.50	4.53	4.94	4.62	4.28
		COP	1.26	1.34	1.50	1.63	1.73	1.76	2.87	1.88	1.97	2.09	2.06	2.42

LEGEND

DB - Dry Bulb
TC - Total Net Capacity (1000 Btu/hour)
Input - Total Power (kW)
COP - W/W

COOLING PERFORMANCE - CASSETTE

MODEL	COOLING INDOOR CONDITIONS DB	WB	OUTDOOR CONDITIONS (DB)	(-22°F) (-25°C)	-13°F (-25°C)	-4°F (-20°C)	0°F (-17°C)	5°F (-15°C)	17°F (-8°C)	47°F (8°C)	77°F (25°C)	86°F (30°C)	95°F (35°C)	104°F (40°C)	113°F (45°C)	122°F (50°C)
9K	69.8°F (21°C)	59F° (15°C)	TC	7.61	7.71	7.81	7.91	6.60	6.39	9.78	10.52	10.84	11.03	9.63	8.41	4.89
			SC	5.44	5.51	5.58	6.14	5.27	5.08	7.10	7.62	7.79	7.88	7.20	6.58	4.89
			Input	0.01	0.07	0.13	0.17	0.14	0.14	0.46	0.72	0.90	0.92	1.07	1.05	0.37
	75.2°F (24°C)	62.6°F (17°C)	TC	7.69	7.79	7.89	7.98	6.68	6.47	9.86	10.60	10.92	11.11	9.71	8.49	4.97
			SC	5.75	5.83	5.90	5.97	5.00	4.84	7.38	7.93	8.17	8.31	7.26	6.35	3.72
			Input	0.14	0.20	0.26	0.30	0.26	0.27	0.58	0.85	1.03	1.05	1.20	1.18	0.50
	80.6°F (27°C)	66.2°F (19°C)	TC	8.31	8.41	8.51	8.61	7.31	7.09	10.49	11.22	11.54	11.73	10.33	9.11	5.59
			SC	6.23	6.30	6.38	6.45	5.47	5.31	7.86	8.41	8.65	8.79	7.74	6.83	4.19
			Input	0.22	0.28	0.34	0.38	0.35	0.35	0.67	0.93	1.11	1.13	1.28	1.26	0.58
	89.6°F (32°C)	73.4°F (23°C)	TC	9.77	9.87	9.97	10.06	8.76	8.54	11.94	12.68	13.00	13.19	11.79	10.56	7.05
			SC	6.84	6.91	6.98	7.05	6.14	5.99	8.37	8.88	9.11	9.24	8.26	7.40	4.94
			Input	0.40	0.45	0.51	0.55	0.52	0.53	0.84	1.11	1.29	1.30	1.46	1.43	0.76
12K	69.8°F (21°C)	59°F (15°C)	TC	13.83	13.58	13.33	11.49	12.42	13.16	12.03	12.24	13.53	13.45	11.16	9.27	4.84
			SC	9.83	9.65	9.47	8.42	9.12	9.43	8.88	8.98	9.58	9.55	8.42	7.59	4.84
			Input	0.36	0.40	0.45	0.39	0.54	0.57	0.62	0.73	1.06	1.26	1.15	1.12	0.70
	75.2°F (24°C)	62.6°F (17°C)	TC	15.08	14.83	14.58	12.73	13.66	14.40	13.27	13.48	14.77	14.69	12.41	10.52	6.09
			SC	10.64	10.47	10.29	8.99	9.64	10.17	9.37	9.52	10.43	10.37	8.76	7.42	4.30
			Input	0.37	0.41	0.46	0.40	0.55	0.58	0.63	0.73	1.07	1.27	1.16	1.12	0.71
	80.6°F (27°C)	66.2°F (19°C)	TC	16.28	16.03	15.78	13.94	14.87	15.61	14.48	14.69	15.97	15.90	13.61	11.72	7.29
			SC	11.23	11.06	10.89	9.62	10.26	10.77	9.99	10.13	11.02	10.97	9.39	8.09	5.03
			Input	0.38	0.43	0.47	0.42	0.56	0.59	0.64	0.75	1.08	1.29	1.18	1.14	0.73
	89.6°F (32°C)	73.4°F (23°C)	TC	18.61	18.36	18.11	16.27	17.20	17.94	16.81	17.02	18.30	18.23	15.94	14.05	9.62
			SC	12.90	12.73	12.55	11.28	11.92	12.43	11.65	11.80	12.69	12.63	11.05	9.74	6.67
			Input	0.41	0.45	0.50	0.44	0.59	0.62	0.67	0.78	1.11	1.31	1.20	1.17	0.75
18K	69.8°F (21°C)	59°F (15°C)	TC	18.20	17.71	17.21	15.56	15.71	16.44	14.63	14.92	14.78	14.36	11.25	9.23	6.66
			SC	13.65	13.28	12.91	11.23	11.45	11.80	10.73	10.84	10.79	10.77	9.42	8.65	6.65
			Input	0.50	0.56	0.62	0.68	0.70	0.63	0.84	1.36	1.32	1.55	1.33	1.32	1.23
	75.2°F (24°C)	62.6°F (17°C)	TC	19.82	19.33	18.84	17.18	17.33	18.06	16.25	16.54	16.40	15.98	12.87	10.85	8.28
			SC	14.85	14.48	14.11	12.88	12.98	13.53	12.18	12.39	12.29	11.97	9.64	8.13	6.21
			Input	0.55	0.61	0.67	0.73	0.74	0.68	0.89	1.40	1.37	1.60	1.38	1.36	1.28
	80.6°F (27°C)	66.2°F (19°C)	TC	21.39	20.90	20.41	18.75	18.90	19.63	17.82	18.11	17.97	17.55	14.44	12.42	9.85
			SC	15.72	15.36	15.00	13.79	13.89	14.43	13.10	13.31	13.21	12.90	10.61	9.13	7.24
			Input	0.60	0.66	0.72	0.77	0.79	0.72	0.93	1.45	1.41	1.64	1.42	1.41	1.32
	89.6°F (32°C)	73.4°F (23°C)	TC	24.33	23.84	23.34	21.69	21.83	22.57	20.76	21.05	20.91	20.49	17.38	15.36	12.79
			SC	16.11	15.78	15.46	14.36	14.46	14.94	13.75	13.94	13.85	13.57	11.51	10.17	8.47
			Input	0.67	0.73	0.79	0.85	0.87	0.80	1.01	1.53	1.49	1.72	1.50	1.49	1.40
24K	69.8°F (21°C)	59°F (15°C)	TC	23.15	23.07	22.99	22.21	21.68	21.47	23.77	26.21	24.98	23.18	21.89	19.58	18.65
			SC	16.32	16.26	16.21	15.94	15.34	15.32	16.69	17.91	17.27	16.34	15.74	14.41	14.17
			Input	1.88	1.90	1.92	2.06	2.05	2.06	1.89	1.66	1.74	2.03	2.21	2.31	2.54
	75.2°F (24°C)	62.6°F (17°C)	TC	21.04	20.96	20.88	20.10	19.57	19.36	21.66	24.10	22.87	21.07	19.78	17.47	16.54
			SC	15.87	15.81	15.75	15.16	14.76	14.61	16.34	18.18	17.25	15.90	14.92	13.18	12.48
			Input	2.27	2.29	2.31	2.45	2.44	2.45	2.28	2.05	2.12	2.41	2.59	2.70	2.93
	80.6°F (27°C)	66.2°F (19°C)	TC	21.23	21.14	21.06	20.28	19.75	19.54	21.84	24.28	23.05	21.26	19.96	17.65	16.72
			SC	16.20	16.14	16.07	15.48	15.07	14.91	16.67	18.53	17.59	16.22	15.23	13.47	12.76
			Input	2.47	2.48	2.50	2.64	2.63	2.64	2.47	2.25	2.32	2.61	2.79	2.89	3.12
	89.6°F (32°C)	73.4°F (23°C)	TC	22.04	21.96	21.88	21.10	20.56	20.36	22.66	25.10	23.87	22.07	20.78	18.46	17.54
			SC	16.04	15.98	15.92	15.35	14.97	14.82	16.49	18.27	17.37	16.06	15.12	13.44	12.76

LEGEND

DB - Dry Bulb
WB - Wet Bulb
TC - Total Net Capacity (1000 Btu/hour)
SC - Sensible Capacity (1000 Btu/hour)
Input - Total Power (kW)

NOTE: Values in grey are extrapolated based on tested performance.

HEATING PERFORMANCE - CASSETTE

MODEL	HEATING		OUTDOOR CONDITIONS (DB)											
	Indoor Conditions DB		-22°F (-30°C)	-13°F (-25°C)	-4°F (-20°C)	0°F (-17°C)	5°F (-15°C)	17°F (-8°C)	19.4°F (-7°C)	24.8°F (-4°C)	32°F (0°C)	39.2°F (4°C)	44.6°F (7°C)	53.6°F (12°C)
9K	59°F (15°C)	TC	5.23	7.65	9.31	10.43	11.52	13.72	14.05	13.97	15.75	18.01	15.06	14.69
		Input	1.32	1.42	1.54	1.67	1.73	1.98	1.93	2.08	1.97	2.28	1.43	1.17
		COP	1.17	1.58	1.78	1.83	1.95	2.03	2.13	1.97	2.35	2.32	3.08	3.68
	64.4°F (18°C)	TC	5.22	7.64	9.30	10.42	11.51	13.71	14.04	13.96	15.74	18.00	15.05	14.68
		Input	1.35	1.45	1.57	1.70	1.76	2.01	1.96	2.11	2.00	2.31	1.47	1.20
		COP	1.13	1.54	1.74	1.80	1.91	2.00	2.10	1.94	2.31	2.29	3.01	3.58
	69°F (20.5°C)	TC	5.22	7.63	9.29	10.41	11.51	13.70	14.04	13.96	15.74	17.99	15.04	14.68
		Input	1.32	1.42	1.54	1.67	1.73	1.98	1.93	2.08	1.97	2.28	1.43	1.17
		COP	1.17	1.58	1.78	1.83	1.95	2.03	2.13	1.97	2.35	2.32	3.08	3.68
	71.6°F (22°C)	TC	4.25	6.66	8.32	9.44	10.53	12.73	13.07	12.99	14.77	17.02	14.07	13.70
		Input	1.39	1.50	1.61	1.74	1.81	2.06	2.01	2.15	2.04	2.35	1.51	1.25
		COP	0.89	1.30	1.51	1.59	1.71	1.81	1.91	1.77	2.12	2.12	2.73	3.22
12K	59°F (15°C)	TC	5.75	8.02	9.96	11.17	11.99	14.26	13.53	14.87	16.33	17.70	14.30	16.01
		Input	1.46	1.52	1.67	1.72	1.74	1.72	1.63	1.72	1.72	1.76	1.22	1.25
		COP	1.16	1.55	1.75	1.91	2.02	2.44	2.43	2.53	2.77	2.95	3.43	3.74
	64.4°F (18°C)	TC	5.81	8.08	10.02	11.23	12.05	14.32	13.58	14.93	16.39	17.76	14.36	16.07
		Input	1.46	1.52	1.67	1.72	1.74	1.72	1.63	1.72	1.72	1.76	1.22	1.25
		COP	1.17	1.56	1.76	1.92	2.03	2.45	2.44	2.54	2.78	2.96	3.44	3.75
	69°F (20.5°C)	TC	5.86	8.13	10.07	11.28	12.10	14.37	13.63	14.98	16.44	17.81	14.41	16.12
		Input	1.46	1.52	1.67	1.72	1.74	1.72	1.64	1.72	1.73	1.76	1.22	1.26
		COP	1.18	1.57	1.77	1.92	2.04	2.45	2.44	2.55	2.79	2.97	3.45	3.76
	71.6°F (22°C)	TC	5.89	8.16	10.10	11.31	12.13	14.40	13.66	15.01	16.46	17.84	14.44	16.15
		Input	1.46	1.52	1.67	1.72	1.74	1.72	1.64	1.72	1.73	1.76	1.22	1.26
		COP	1.18	1.58	1.77	1.93	2.05	2.46	2.45	2.55	2.80	2.97	3.46	3.77
18K	59°F (15°C)	TC	10.73	13.19	16.59	16.99	18.75	22.87	20.72	24.93	21.75	23.38	22.11	22.72
		Input	1.98	2.34	2.62	2.58	2.84	3.15	3.05	3.27	2.45	2.31	1.96	1.76
		COP	1.58	1.65	1.85	1.93	1.93	2.13	1.99	2.23	2.61	2.96	3.31	3.78
	64.4°F (18°C)	TC	10.16	12.62	16.03	16.43	18.18	22.30	20.15	24.36	21.19	22.82	21.54	22.15
		Input	1.97	2.32	2.61	2.56	2.82	3.13	3.03	3.25	2.43	2.30	1.94	1.79
		COP	1.51	1.60	1.80	1.88	1.89	2.09	1.95	2.19	2.56	2.91	3.25	3.62
	69°F (20.5°C)	TC	9.68	12.14	15.54	15.94	17.70	21.82	19.67	23.88	20.70	22.33	21.06	21.67
		Input	1.95	2.31	2.59	2.55	2.81	3.12	3.02	3.24	2.41	2.28	1.93	1.76
		COP	1.45	1.54	1.76	1.84	1.85	2.05	1.91	2.16	2.51	2.87	3.20	3.78
	71.6°F (22°C)	TC	9.41	11.87	15.27	15.67	17.42	21.54	19.39	23.61	20.43	22.06	20.79	21.46
		Input	1.95	2.30	2.58	2.54	2.80	3.11	3.01	3.23	2.41	2.27	1.92	1.84
		COP	1.42	1.51	1.73	1.81	1.82	2.03	1.89	2.14	2.49	2.84	3.18	3.42
24K	59°F (15°C)	TC	14.80	18.20	23.64	24.95	26.50	26.55	26.91	30.53	34.20	33.37	30.87	30.94
		Input	2.83	3.33	3.60	3.50	3.64	3.26	3.29	3.62	3.75	3.46	2.54	2.19
		COP	1.53	1.60	1.93	2.09	2.13	2.39	2.39	2.47	2.68	2.83	3.56	4.14
	64.4°F (18°C)	TC	14.89	18.30	23.74	25.04	26.59	26.64	27.00	30.62	34.29	33.47	30.96	31.04
		Input	2.90	3.40	3.67	3.57	3.71	3.33	3.37	3.69	3.82	3.53	2.61	2.26
		COP	1.51	1.58	1.90	2.05	2.10	2.34	2.35	2.43	2.63	2.78	3.48	4.02
	69°F (20.5°C)	TC	14.97	18.37	23.81	25.12	26.67	26.72	27.08	30.70	34.37	33.54	31.04	31.12
		Input	2.83	3.33	3.60	3.50	3.64	3.26	3.29	3.62	3.75	3.46	2.54	2.19
		COP	1.53	1.60	1.93	2.09	2.13	2.39	2.39	2.47	2.68	2.83	3.56	4.14
	71.6°F (22°C)	TC	11.94	15.34	20.78	22.09	23.63	23.69	24.05	27.66	31.33	30.51	28.01	28.08
		Input	2.99	3.49	3.76	3.67	3.80	3.43	3.46	3.79	3.91	3.63	2.71	2.36
		COP	1.17	1.29	1.62	1.76	1.82	2.03	2.04	2.14	2.35	2.47	3.03	3.49

LEGEND

DB - Dry Bulb
TC - Total Net Capacity (1000 Btu/hour)
Input - Total Power (kW)
COP - W/W

COOLING PERFORMANCE - DUCTED

MODEL	COOLING Indoor Conditions DB	WB		OUTDOOR CONDITIONS (DB) -22°F (-30°C)	-13°F (-25°C)	-4°F (-20°C)	0°F (-17°C)	5°F (-15°C)	17°F (-8°C)	47°F (8°C)	77°F (25°C)	86°F (30°C)	95°F (35°C)	104°F (40°C)	113°F (45°C)	122°F (50°C)
09K	69.8°F (21°C)	59°F (15°C)	TC	9.94	9.84	9.73	9.25	9.24	7.96	10.57	10.10	9.59	10.32	9.25	8.02	4.73
			SC	6.68	6.61	6.54	6.36	6.36	5.72	7.05	6.81	6.59	6.93	6.37	5.75	4.39
			Input	0.08	0.14	0.20	0.23	0.22	0.28	0.59	0.72	0.79	1.10	1.09	1.06	0.69
	75.2°F (24°C)	62.6°F (17°C)	TC	10.23	10.13	10.02	9.54	9.53	8.25	10.86	10.39	9.88	10.61	9.54	8.31	5.02
			SC	7.00	6.92	6.85	6.52	6.52	5.64	7.42	7.11	6.75	7.25	6.52	5.68	3.43
			Input	0.01	0.07	0.13	0.15	0.15	0.20	0.52	0.65	0.72	1.03	1.01	0.98	0.61
	80.6°F (27°C)	66.2°F (19°C)	TC	10.93	10.82	10.72	10.23	10.22	8.95	11.55	11.09	10.57	11.30	10.24	9.00	5.71
			SC	7.35	7.28	7.21	6.88	6.88	6.02	7.77	7.46	7.11	7.61	6.89	6.06	3.84
			Input	0.00	0.06	0.12	0.15	0.14	0.20	0.51	0.64	0.71	1.03	1.01	0.98	0.61
	89.6°F (32°C)	73.4°F (23°C)	TC	12.49	12.38	12.28	11.79	11.78	10.51	13.11	12.65	12.13	12.86	11.80	10.56	7.27
			SC	7.64	7.58	7.51	7.22	7.21	6.43	8.02	7.74	7.42	7.87	7.22	6.46	4.45
			Input	0.03	0.09	0.15	0.18	0.17	0.23	0.54	0.67	0.74	1.06	1.04	1.01	0.64
12K	69.8°F (21°C)	59°F (15°C)	TC	11.90	11.76	11.62	10.53	10.14	12.21	10.60	11.41	12.60	12.55	10.74	9.24	5.40
			SC	8.25	8.16	8.06	7.70	7.59	8.54	7.78	8.08	8.69	8.70	7.84	7.17	5.40
			Input	0.32	0.37	0.42	0.40	0.47	0.58	0.50	0.75	1.07	1.26	1.14	1.10	0.71
	75.2°F (24°C)	62.6°F (17°C)	TC	12.85	12.71	12.57	11.48	11.09	13.16	11.55	12.36	13.55	13.49	11.69	10.19	6.35
			SC	8.77	8.67	8.58	7.83	7.57	8.98	7.88	8.43	9.24	9.21	7.98	6.95	4.33
			Input	0.32	0.37	0.42	0.40	0.48	0.59	0.51	0.75	1.07	1.27	1.15	1.11	0.71
	80.6°F (27°C)	66.2°F (19°C)	TC	13.82	13.68	13.54	12.45	12.07	14.14	12.52	13.33	14.52	14.47	12.67	11.16	7.32
			SC	9.22	9.13	9.03	8.30	8.05	9.43	8.35	8.89	9.68	9.65	8.45	7.44	4.88
			Input	0.34	0.38	0.43	0.42	0.49	0.60	0.52	0.76	1.08	1.28	1.16	1.12	0.72
	89.6°F (32°C)	73.4°F (23°C)	TC	15.67	15.53	15.40	14.30	13.92	15.99	14.37	15.18	16.37	16.32	14.52	13.01	9.17
			SC	10.50	10.40	10.31	9.58	9.32	10.71	9.62	10.17	10.96	10.93	9.72	8.71	6.14
			Input	0.36	0.41	0.45	0.44	0.51	0.62	0.54	0.78	1.10	1.30	1.18	1.14	0.75
18K	69.8°F (21°C)	59°F (15°C)	TC	19.53	19.00	18.47	16.70	16.85	17.64	15.70	16.01	15.87	15.41	12.07	9.91	7.15
			SC	14.65	14.25	13.86	12.05	12.29	12.67	11.52	11.63	11.58	11.56	10.11	9.29	7.14
			Input	0.53	0.60	0.66	0.72	0.73	0.66	0.89	1.43	1.40	1.63	1.40	1.39	1.30
	75.2°F (24°C)	62.6°F (17°C)	TC	21.27	20.74	20.21	18.44	18.59	19.38	17.44	17.75	17.60	17.15	13.81	11.65	8.89
			SC	15.94	15.54	15.15	13.82	13.93	14.52	13.07	13.30	13.19	12.85	10.35	8.73	6.66
			Input	0.58	0.65	0.71	0.77	0.79	0.71	0.94	1.48	1.45	1.69	1.45	1.44	1.35
	80.6°F (27°C)	66.2°F (19°C)	TC	22.95	22.43	21.90	20.12	20.28	21.07	19.13	19.43	19.29	18.83	15.50	13.33	10.57
			SC	16.88	16.49	16.10	14.79	14.91	15.49	14.06	14.29	14.18	13.85	11.39	9.80	7.77
			Input	0.63	0.69	0.76	0.82	0.83	0.76	0.99	1.53	1.49	1.73	1.50	1.49	1.40
	89.6°F (32°C)	73.4°F (23°C)	TC	26.11	25.58	25.05	23.28	23.43	24.22	22.28	22.59	22.44	21.99	18.65	16.49	13.73
			SC	17.29	16.94	16.59	15.41	15.51	16.04	14.75	14.96	14.86	14.56	12.35	10.92	9.09
			Input	0.71	0.78	0.84	0.90	0.91	0.84	1.07	1.61	1.58	1.81	1.58	1.57	1.48
24K	69.8°F (21°C)	59°F (15°C)	TC	31.53	30.71	29.88	24.57	27.20	29.99	28.58	26.53	25.04	22.40	21.34	18.05	10.69
			SC	26.32	25.63	24.94	18.24	17.55	17.53	19.09	20.49	19.76	18.70	18.01	16.49	16.21
			Input	1.96	1.97	1.99	2.14	2.13	2.14	1.96	1.73	1.80	2.10	2.29	2.40	2.64
	75.2°F (24°C)	62.6°F (17°C)	TC	34.44	33.62	32.80	27.48	30.11	32.90	31.50	29.44	27.96	25.31	24.25	20.97	13.61
			SC	25.23	24.62	24.02	20.13	22.06	24.10	23.07	21.56	20.48	18.54	17.76	15.36	9.97
			Input	2.36	2.37	2.39	2.54	2.53	2.54	2.36	2.13	2.20	2.50	2.69	2.80	3.04
	80.6°F (27°C)	66.2°F (19°C)	TC	37.22	36.40	35.58	30.26	32.90	35.68	34.28	32.22	30.74	28.10	27.03	23.75	16.39
			SC	25.17	24.61	24.05	20.46	22.24	24.12	23.17	21.78	20.78	18.99	18.28	16.06	11.08
			Input	2.56	2.58	2.59	2.74	2.73	2.74	2.56	2.33	2.40	2.71	2.89	3.00	3.24
	89.6°F (32°C)	73.4°F (23°C)	TC	42.44	41.62	40.80	35.48	38.11	40.90	39.49	37.44	35.95	33.31	32.25	28.96	21.60
			SC	28.85	28.29	27.73	24.12	25.91	27.80	26.84	25.45	24.44	22.64	21.92	19.69	14.68
			Input	2.90	2.92	2.94	3.08	3.08	3.08	2.91	2.68	2.75	3.05	3.24	3.34	3.59

LEGEND

DB - Dry Bulb
WB - Wet Bulb
TC - Total Net Capacity (1000 Btu/hour)
SC - Sensible Capacity (1000 Btu/hour)
Input - Total Power (kW)

NOTE: Values in grey are extrapolated based on tested performance.

HEATING PERFORMANCE - DUCTED

MODEL	HEATING Indoor Conditions DB		OUTDOOR CONDITIONS (DB) -22°F (-30°C)	-13°F (-25°C)	-4°F (-20°C)	0°F (-17°C)	5°F (-15°C)	17°F (-8°C)	19.4°F (-7°C)	24.8°F (-4°C)	32°F (0°C)	39.2°F (4°C)	44.6°F (7°C)	53.6°F (12°C)
09K	59°F (15°C)	TC	5.43	7.05	9.61	10.86	10.83	13.82	14.18	14.73	16.31	18.97	16.04	15.47
		Input	1.39	1.45	1.43	1.51	1.51	1.70	1.73	1.77	1.81	2.08	1.36	1.13
		COP	1.15	1.42	1.97	2.11	2.10	2.37	2.39	2.43	2.63	2.67	3.47	4.02
	64.4°F (18°C)	TC	5.47	7.08	9.64	10.90	10.87	13.85	14.21	14.76	16.34	19.00	16.07	15.51
		Input	1.42	1.49	1.46	1.54	1.55	1.74	1.77	1.80	1.85	2.11	1.39	1.16
		COP	1.13	1.40	1.93	2.07	2.06	2.34	2.36	2.40	2.59	2.63	3.39	3.91
	69°F (20.5°C)	TC	5.50	7.11	9.67	10.93	10.90	13.88	14.24	14.79	16.37	19.03	16.10	15.53
		Input	1.39	1.45	1.43	1.51	1.51	1.70	1.73	1.77	1.81	2.08	1.36	1.13
		COP	1.15	1.42	1.97	2.11	2.10	2.37	2.39	2.43	2.63	2.67	3.47	4.02
	71.6°F (22°C)	TC	4.25	5.86	8.42	9.67	9.65	12.63	12.99	13.54	15.12	17.78	14.85	14.28
		Input	1.47	1.53	1.51	1.59	1.59	1.78	1.81	1.85	1.89	2.16	1.44	1.21
		COP	0.85	1.12	1.63	1.78	1.78	2.08	2.10	2.14	2.34	2.41	3.03	3.47
12K	59°F (15°C)	TC	6.24	7.85	10.63	11.81	12.65	13.82	14.25	14.66	15.36	18.19	15.55	15.48
		Input	1.40	1.55	1.70	1.74	1.79	1.64	1.67	1.69	1.65	2.00	1.35	1.12
		COP	1.31	1.48	1.83	1.99	2.07	2.47	2.50	2.55	2.73	2.67	3.38	4.04
	64.4°F (18°C)	TC	6.25	7.86	10.64	11.82	12.66	13.83	14.26	14.68	15.38	18.20	15.56	15.49
		Input	1.40	1.55	1.70	1.74	1.79	1.64	1.67	1.69	1.65	2.00	1.35	1.13
		COP	1.31	1.48	1.83	1.99	2.07	2.47	2.50	2.55	2.73	2.67	3.38	4.04
	69°F (20.5°C)	TC	6.26	7.87	10.65	11.83	12.67	13.84	14.27	14.69	15.38	18.21	15.57	15.50
		Input	1.40	1.55	1.70	1.74	1.79	1.64	1.67	1.69	1.65	2.00	1.35	1.13
		COP	1.31	1.48	1.83	2.00	2.07	2.47	2.50	2.55	2.73	2.67	3.38	4.03
	71.6°F (22°C)	TC	6.27	7.87	10.65	11.83	12.68	13.85	14.27	14.69	15.39	18.21	15.57	15.51
		Input	1.40	1.55	1.70	1.74	1.79	1.64	1.67	1.69	1.65	2.00	1.35	1.13
		COP	1.31	1.49	1.83	2.00	2.07	2.47	2.50	2.55	2.73	2.67	3.38	4.03
18K	59°F (15°C)	TC	11.25	13.83	17.40	17.82	19.66	23.98	21.73	26.15	22.81	24.52	23.19	22.72
		Input	1.90	2.23	2.50	2.46	2.71	3.01	2.91	3.12	2.34	2.21	1.87	1.76
		COP	1.74	1.82	2.04	2.12	2.12	2.34	2.19	2.45	2.86	3.25	3.64	3.78
	64.4°F (18°C)	TC	10.66	13.24	16.81	17.23	19.07	23.39	21.13	25.55	22.22	23.93	22.59	22.13
		Input	1.88	2.22	2.49	2.45	2.70	2.99	2.89	3.11	2.32	2.19	1.85	1.79
		COP	1.66	1.75	1.98	2.06	2.07	2.29	2.14	2.41	2.81	3.20	3.57	3.62
	69°F (20.5°C)	TC	10.15	12.73	16.30	16.72	18.56	22.88	20.63	25.05	21.71	23.42	22.09	21.62
		Input	1.87	2.20	2.48	2.43	2.68	2.98	2.88	3.09	2.31	2.18	1.84	1.76
		COP	1.59	1.69	1.93	2.02	2.03	2.25	2.10	2.37	2.76	3.15	3.52	3.78
	71.6°F (22°C)	TC	9.87	12.45	16.01	16.43	18.27	22.59	20.34	24.76	21.43	23.14	21.80	21.40
		Input	1.86	2.19	2.47	2.42	2.68	2.97	2.87	3.09	2.30	2.17	1.83	1.83
		COP	1.56	1.66	1.90	1.99	2.00	2.23	2.08	2.35	2.73	3.12	3.49	3.42
24K	59°F (15°C)	TC	15.46	19.02	24.71	26.07	27.69	27.74	28.12	31.90	35.73	34.87	32.26	32.33
		Input	2.53	2.98	3.22	3.14	3.26	2.92	2.95	3.24	3.35	3.10	2.27	1.96
		COP	1.79	1.87	2.25	2.44	2.49	2.79	2.79	2.88	3.12	3.30	4.16	4.83
	64.4°F (18°C)	TC	15.56	19.12	24.80	26.17	27.78	27.84	28.22	31.99	35.83	34.97	32.36	32.43
		Input	2.53	2.98	3.22	3.14	3.26	2.92	2.95	3.25	3.36	3.10	2.28	1.96
		COP	1.80	1.88	2.25	2.44	2.50	2.79	2.80	2.89	3.13	3.30	4.17	4.84
	69°F (20.5°C)	TC	15.64	19.20	24.88	26.25	27.86	27.92	28.30	32.08	35.91	35.05	32.44	32.51
		Input	2.54	2.98	3.23	3.14	3.26	2.92	2.95	3.25	3.36	3.10	2.28	1.97
		COP	1.81	1.89	2.26	2.45	2.50	2.80	2.81	2.89	3.13	3.31	4.17	4.85
	71.6°F (22°C)	TC	15.69	19.25	24.93	26.30	27.91	27.97	28.34	32.12	35.96	35.10	32.48	32.56
		Input	2.54	2.98	3.23	3.14	3.26	2.92	2.96	3.25	3.36	3.11	2.28	1.97
		COP	1.81	1.89	2.26	2.45	2.51	2.80	2.81	2.90	3.14	3.31	4.18	4.85

LEGEND

DB - Dry Bulb
TC - Total Net Capacity (1000 Btu/hour)
Input - Total Power (kW)
COP - W/W

COOLING PERFORMANCE - DUCTED MIX-MATCH

MODEL	COOLING			OUTDOOR CONDITIONS (DB)												
	INDOOR CONDITIONS DB	WB		(-22°F) (-25°C)	-13°F (-25°C)	-4°F (-20°C)	0°F (-17°C)	5°F (-15°C)	17°F (-8°C)	47°F (8°C)	77°F (25°C)	86°F (30°C	95°F (35°C)	104°F (40°C)	113°F (45°C)	122°F (50°C)
18KODU-24KIDU (208-230V)	69.8°F (21°C)	59°F (15°C)	TC	20.53	20.19	19.86	18.90	18.73	18.92	17.51	18.86	17.41	19.64	17.86	13.45	10.79
			SC	17.70	17.41	17.12	16.54	16.48	4.87	15.91	16.58	15.92	16.93	16.10	13.45	10.79
			Input	0.69	0.76	0.84	0.97	1.00	0.99	1.14	1.21	1.34	1.93	2.10	1.81	1.79
	75.2°F (24°C)	62.6°F (17°C)	TC	22.66	22.32	21.98	21.02	20.86	21.04	19.63	20.98	19.54	21.77	19.98	15.57	12.91
			SC	19.11	18.83	18.54	17.73	17.60	17.75	16.56	17.70	16.48	18.36	16.86	13.14	10.89
			Input	0.76	0.84	0.91	1.04	1.07	1.06	1.21	1.28	1.41	2.00	2.17	1.89	1.87
	80.6°F (2°C)	66.2°F (19°C)	TC	24.46	24.13	23.79	22.83	22.67	22.85	21.44	22.79	21.34	23.57	21.79	17.38	14.72
			SC	20.38	20.10	19.81	19.01	18.88	19.03	17.86	18.98	17.78	19.63	18.15	14.47	12.26
			Input	0.83	0.90	0.98	1.11	1.13	1.13	1.28	1.34	1.48	2.06	2.23	1.95	1.93
	89.6°F (32°C)	73.4°F (23°C)	TC	27.80	27.46	27.12	26.16	26.00	26.18	24.77	26.12	24.68	26.91	25.12	20.71	18.05
			SC	21.28	21.02	20.76	20.02	19.90	20.04	18.96	20.00	18.89	20.59	19.23	15.85	13.82
			Input	0.95	1.02	1.10	1.23	1.25	1.25	1.40	1.46	1.60	2.18	2.35	2.07	2.05

HEATING PERFORMANCE - DUCTED MIX-MATCH

MODEL	HEATING		OUTDOOR CONDITIONS (DB)											
	INDOOR CONDITIONS DB		-22°F (-30°C)	-13°F (-25°C)	-4°F (-20°C)	0°F (-17°C)	5°F (-15°C)	17°F (-8°C)	19.4°F (-7°C)	24.8°F (-4°C)	32°°F (0C)	39.2°F (4°C)	44.6°F (7°C)	53.6°F (12°C)
18KODU-24KIDU(208-230V)	59°F (15°C)	TC	10.34	14.27	15.74	11.49	16.74	22.97	23.49	25.97	26.40	20.40	23.54	26.89
		Input	1.90	1.93	1.96	1.74	2.08	2.42	2.47	2.45	2.30	1.84	1.67	1.74
		COP	1.67	2.16	2.35	1.94	2.36	2.78	2.79	3.11	3.02	3.23	4.13	4.52
	64.4°F (18°C)	TC	10.48	14.42	15.89	11.63	16.89	23.12	23.64	26.11	26.54	20.55	23.69	27.04
		Input	1.97	2.01	2.04	1.82	2.16	2.50	2.55	2.53	2.38	1.92	1.75	1.82
		COP	1.56	2.10	2.28	1.88	2.30	2.71	2.72	3.03	3.27	3.13	3.97	4.35
	69°F (20.5°C)	TC	10.61	14.55	16.02	11.76	17.01	23.24	23.76	26.24	26.67	20.67	23.82	27.16
		Input	1.90	1.93	1.96	1.74	2.08	2.42	2.47	2.45	2.30	1.84	1.67	1.74
		COP	1.67	2.16	2.35	1.94	2.36	2.78	2.79	3.11	3.02	3.23	4.13	4.52
	71.6°F (22°C)	TC	10.35	14.29	15.76	11.50	16.76	22.99	23.51	25.98	26.41	20.42	23.56	26.91
		Input	2.08	2.12	2.14	1.92	2.26	2.60	2.65	2.63	2.48	2.03	1.86	1.93
		COP	1.46	1.98	2.15	1.75	2.17	2.59	2.60	2.89	3.12	2.95	3.72	4.09

Manufacturer reserves the right to change, at any time, specifications and designs without notice and without obligations.

COOLING PERFORMANCE - CONSOLE

MODEL	COOLING Indoor Conditions DB	WB		OUTDOOR CONDITIONS (DB) -22°F (-30°C)	-13°F (-25°C)	-4°F (-20°C)	0°F (-17°C)	5°F (-15°C)	17°F (-8°C)	47°F (8°C)	77°F (25°C)	86°F (30°C)	95°F (35°C)	104°F (40°C)	113°F (45°C)	122°F (50°C)
12K	69.8°F (21°C)	59°F (15°C)	TC	11.56	11.38	11.20	10.46	10.20	10.74	10.46	10.77	10.67	10.65	10.23	8.81	4.90
			SC	7.86	7.74	7.62	7.14	7.02	7.28	7.12	7.33	7.26	7.24	6.97	6.32	4.63
			Input	0.37	0.41	0.45	0.52	0.47	0.58	0.47	0.68	0.80	0.96	1.10	1.07	0.68
	75.2°F (24°C)	62.6°F (17°C)	TC	13.50	13.32	13.14	12.41	12.14	12.69	12.41	12.72	12.62	12.59	12.17	10.76	6.85
			SC	9.10	8.97	8.85	8.36	8.18	8.55	8.36	8.57	8.50	8.48	8.20	7.25	4.61
			Input	0.60	0.63	0.67	0.74	0.69	0.80	0.69	0.90	1.02	1.18	1.32	1.29	0.90
	80.6°F (27°C)	66.2°F (19°C)	TC	15.01	14.83	14.65	13.92	13.65	14.20	13.92	14.23	14.13	14.10	13.68	12.27	8.36
			SC	9.79	9.67	9.56	9.08	8.90	9.26	9.08	9.28	9.21	9.20	8.92	8.00	5.45
			Input	0.72	0.75	0.79	0.86	0.81	0.93	0.81	1.02	1.14	1.30	1.44	1.41	1.02
	89.6°F (32°C)	73.4°F (23°C)	TC	18.02	17.84	17.67	16.93	16.66	17.21	16.93	17.24	17.14	17.11	16.69	15.28	11.37
			SC	10.29	10.19	10.09	9.67	9.52	9.83	9.67	9.85	9.79	9.77	9.53	8.73	6.49
			Input	0.96	0.99	1.03	1.10	1.05	1.17	1.05	1.26	1.38	1.54	1.68	1.65	1.26
18K	69.8°F (21°C)	59°F (15°C)	TC	20.67	20.11	19.56	17.68	17.84	18.68	16.62	16.95	16.79	16.31	12.78	10.49	7.57
			SC	15.51	15.09	14.67	12.76	13.01	13.41	12.19	12.31	12.26	12.24	10.70	9.83	7.56
			Input	0.54	0.61	0.67	0.74	0.75	0.68	0.91	1.47	1.43	1.67	1.43	1.42	1.33
	75.2°F (24°C)	62.6°F (17°C)	TC	22.51	21.96	21.40	19.52	19.68	20.52	18.46	18.79	18.63	18.15	14.62	12.33	9.41
			SC	16.87	16.45	16.03	14.63	14.75	15.37	13.84	14.08	13.96	13.60	10.95	9.24	7.05
			Input	0.60	0.66	0.73	0.79	0.80	0.73	0.96	1.52	1.48	1.72	1.49	1.47	1.38
	80.6°F (27°C)	66.2°F (19°C)	TC	24.30	23.74	23.18	21.30	21.47	22.30	20.25	20.57	20.42	19.94	16.40	14.11	11.19
			SC	17.86	17.45	17.04	15.66	15.78	16.39	14.89	15.12	15.01	14.66	12.06	10.38	8.23
			Input	0.64	0.71	0.77	0.84	0.85	0.78	1.01	1.57	1.53	1.77	1.53	1.52	1.43
	89.6°F (32°C)	73.4°F (23°C)	TC	27.64	27.08	26.52	24.64	24.80	25.64	23.59	23.91	23.76	23.27	19.74	17.45	14.53
			SC	20.42	20.01	19.59	18.20	18.33	18.94	17.43	17.67	17.55	17.20	14.59	12.89	10.73
			Input	0.73	0.79	0.86	0.92	0.94	0.86	1.09	1.65	1.61	1.86	1.62	1.61	1.51
24K	69.8°F (21°C)	59°F (15°C)	TC	25.58	25.49	25.40	24.53	23.95	23.72	26.26	28.95	27.59	25.61	24.18	21.63	20.60
			SC	18.03	17.96	17.90	17.61	16.94	16.92	18.43	19.79	19.08	18.05	17.39	15.92	15.65
			Input	1.96	1.98	2.00	2.15	2.14	2.15	1.97	1.73	1.81	2.11	2.30	2.41	2.65
	75.2°F (24°C)	62.6°F (17°C)	TC	23.23	23.14	23.05	22.19	21.60	21.37	23.91	26.61	25.25	23.26	21.83	19.28	18.25
			SC	17.52	17.46	17.39	16.74	16.29	16.12	18.04	20.07	19.05	17.55	16.47	14.54	13.77
			Input	2.37	2.38	2.40	2.55	2.54	2.55	2.37	2.14	2.21	2.51	2.70	2.81	3.05
	80.6°F (27°C)	66.2°F (19°C)	TC	23.42	23.33	23.24	22.37	21.78	21.56	24.10	26.79	25.43	23.45	22.02	19.46	18.44
			SC	17.87	17.80	17.73	17.07	16.62	16.45	18.39	20.44	19.41	17.89	16.80	14.85	14.07
			Input	2.57	2.59	2.60	2.75	2.74	2.75	2.57	2.34	2.41	2.72	2.90	3.01	3.25
	89.6°F (32°C)	73.4°F (23°C)	TC	24.29	24.20	24.11	23.25	22.66	22.43	24.97	27.67	26.31	24.32	22.89	20.34	19.31
			SC	17.68	17.61	17.55	16.92	16.49	16.33	18.18	20.14	19.15	17.70	16.66	14.80	14.06
			Input	2.91	2.93	2.95	3.10	3.09	3.10	2.92	2.69	2.76	3.06	3.25	3.36	3.60

LEGEND

DB - Dry Bulb
WB - Wet Bulb
TC - Total Net Capacity (1000 Btu/hour)
SC - Sensible Capacity (1000 Btu/hour)
Input - Total Power (kW)

NOTE: Values in grey are extrapolated based on tested performance.

HEATING PERFORMANCE - CONSOLE

MODEL	HEATING Indoor Conditions DB		OUTDOOR CONDITIONS (DB)											
			-22°F (-30°C)	-13°F (-25°C)	-4°F (-20°C)	0°F (-17°C)	5°F (-15°C)	17°F (-8°C)	19.4°F (-7°C)	24.8°F (-4°C)	32°F (0°C)	39.2°F (4°C)	44.6°F (7°C)	53.6°F (12°C)
12K	59°F (15°C)	TC	5.70	6.00	10.42	11.53	12.30	13.48	13.93	14.55	15.90	11.91	14.27	14.66
		Input	1.44	1.39	1.69	1.75	1.80	1.60	1.69	1.69	1.69	1.48	1.27	1.07
		COP	1.16	1.27	1.81	1.94	2.01	2.46	2.42	2.53	2.76	2.36	3.30	4.03
	64.4°F (18°C)	TC	5.81	6.10	10.52	11.64	12.41	13.58	14.03	14.66	16.00	12.02	14.38	14.76
		Input	1.49	1.44	1.75	1.80	1.85	1.66	1.74	1.74	1.74	1.54	1.32	1.12
		COP	1.14	1.24	1.77	1.90	1.96	2.40	2.36	2.47	2.69	2.29	3.19	3.86
	69°F (20.5°C)	TC	5.90	6.19	10.61	11.72	12.49	13.67	14.12	14.74	16.09	12.11	14.46	14.85
		Input	1.44	1.39	1.69	1.75	1.80	1.60	1.69	1.69	1.69	1.48	1.27	1.07
		COP	1.16	1.27	1.81	1.94	2.01	2.46	2.42	2.53	2.76	2.36	3.30	4.03
	71.6°F (22°C)	TC	5.86	6.16	10.58	11.69	12.46	13.64	14.09	14.71	16.06	12.07	14.43	14.82
		Input	1.57	1.51	1.82	1.87	1.93	1.73	1.82	1.81	1.82	1.61	1.39	1.19
		COP	1.10	1.19	1.70	1.83	1.90	2.31	2.27	2.38	2.59	2.20	3.04	3.64
18K	59°F (15°C)	TC	10.99	13.51	17.00	17.41	19.20	23.42	21.22	25.54	22.28	23.95	22.65	23.28
		Input	1.90	2.23	2.50	2.46	2.71	3.01	2.91	3.12	2.33	2.21	1.87	1.68
		COP	1.70	1.78	1.99	2.07	2.07	2.28	2.14	2.40	2.80	3.18	3.55	4.06
	64.4°F (18°C)	TC	10.41	12.93	16.42	16.83	18.62	22.84	20.64	24.96	21.70	23.37	22.07	22.70
		Input	1.88	2.21	2.49	2.44	2.70	2.99	2.89	3.11	2.32	2.19	1.85	1.71
		COP	1.62	1.71	1.93	2.02	2.02	2.24	2.09	2.35	2.74	3.12	3.49	3.89
	69°F (20.5°C)	TC	9.92	12.44	15.92	16.33	18.13	22.35	20.15	24.46	21.21	22.88	21.57	22.20
		Input	1.87	2.20	2.47	2.43	2.68	2.98	2.88	3.09	2.31	2.18	1.84	1.68
		COP	1.56	1.66	1.89	1.97	1.98	2.20	2.05	2.32	2.70	3.08	3.44	4.06
	71.6°F (22°C)	TC	9.64	12.16	15.64	16.05	17.85	22.07	19.87	24.18	20.93	22.60	21.29	21.99
		Input	1.86	2.19	2.47	2.42	2.68	2.97	2.87	3.09	2.30	2.17	1.83	1.76
		COP	1.52	1.62	1.86	1.94	1.96	2.18	2.03	2.30	2.67	3.05	3.41	3.67
24K	59°F (15°C)	TC	15.30	18.82	24.45	25.80	27.39	27.45	27.82	31.56	35.36	34.51	31.92	31.99
		Input	2.89	3.40	3.68	3.58	3.72	3.33	3.37	3.70	3.83	3.54	2.60	2.24
		COP	1.55	1.62	1.95	2.11	2.16	2.41	2.42	2.50	2.71	2.86	3.60	4.19
	64.4°F (18°C)	TC	15.40	18.92	24.54	25.89	27.49	27.55	27.92	31.66	35.45	34.60	32.02	32.09
		Input	2.89	3.40	3.68	3.58	3.72	3.33	3.37	3.71	3.83	3.54	2.60	2.24
		COP	1.56	1.63	1.95	2.12	2.16	2.42	2.43	2.50	2.71	2.86	3.61	4.19
	69°F (20.5°C)	TC	15.48	19.00	24.62	25.98	27.57	27.63	28.00	31.74	35.53	34.68	32.10	32.17
		Input	2.90	3.41	3.68	3.58	3.72	3.34	3.37	3.71	3.83	3.54	2.60	2.24
		COP	1.57	1.63	1.96	2.12	2.17	2.43	2.43	2.51	2.72	2.87	3.62	4.20
	71.6°F (22°C)	TC	15.52	19.04	24.67	26.02	27.62	27.67	28.05	31.78	35.58	34.73	32.14	32.22
		Input	2.90	3.41	3.69	3.59	3.73	3.34	3.37	3.71	3.84	3.54	2.60	2.25
		COP	1.57	1.64	1.96	2.13	2.17	2.43	2.44	2.51	2.72	2.87	3.62	4.20

LEGEND

DB - Dry Bulb
TC - Total Net Capacity (1000 Btu/hour)
Input - Total Power (kW)
COP - W/W

Manufacturer reserves the right to change, at any time, specifications and designs without notice and without obligations.

AHU PERFORMANCE

HEATING PERFORMANCE AT INDOOR DRY BULB TEMPERATURE SIZE 18K

AIRFLOW (CFM)	OUTDOOR DB (°F)	TC:TOTAL CAPACITY IN KILOWATTS				PI:TOTAL POWER IN KILOWATTS			
		Indoor Conditions (DB °F)				Indoor Conditions (DB °F)			
		60.8	68.0	71.6	75.2	60.8	68.0	71.6	75.2
489	-22.0	12251	12117	12050	11983	1.54	1.60	1.55	1.55
	-10.0	14096	13942	13865	13788	1.80	1.87	1.81	1.81
	0.0	15634	15463	15377	15292	2.02	2.10	2.03	2.03
	5.0	16456	16276	16186	16096	2.15	2.22	2.15	2.15
	14.0	17572	17380	17284	17188	2.29	2.37	2.30	2.30
	17.0	18408	18207	18107	18006	2.43	2.52	2.44	2.44
	22.0	18108	17910	17811	17712	2.34	2.34	2.34	2.34
	27.0	17712	17613	17515	17416	2.17	2.16	2.16	2.16
	32.0	17218	17119	17020	16921	2.01	2.00	1.99	1.98
	37.0	17317	17119	17020	16921	1.85	1.83	1.82	1.81
	42.0	17910	17712	17613	17515	1.70	1.67	1.66	1.64
	44.6	18613	18407	18308	18209	1.62	1.50	1.58	1.56
	52.0	18803	18506	18407	18209	1.38	1.34	1.32	1.30
	57.0	18803	18506	18407	18308	1.22	1.17	1.16	1.13
	62.0	18902	18605	18407	18308	1.07	1.01	0.98	0.95
	64.4	18902	18605	18407	18308	0.99	0.93	0.90	0.87
530	-22.0	12514	12380	12313	12247	1.56	1.62	1.57	1.57
	-10.0	14399	14245	14168	14091	1.83	1.89	1.83	1.83
	0.0	15970	15799	15714	15628	2.05	2.12	2.06	2.06
	5.0	16810	16630	16540	16450	2.17	2.25	2.18	2.18
	14.0	17949	17758	17662	17566	2.32	2.40	2.33	2.33
	17.0	18804	18603	18503	18402	2.46	2.55	2.47	2.47
	22.0	18504	18306	18207	18108	2.37	2.37	2.37	2.37
	27.0	18108	18009	17910	17811	2.19	2.19	2.19	2.18
	32.0	17613	17416	17317	17218	2.03	2.02	2.01	2.01
	37.0	17712	17515	17416	17218	1.88	1.86	1.85	1.84
	42.0	18306	18108	18009	17811	1.72	1.69	1.68	1.67
	44.6	19008	18803	18704	18605	1.64	1.52	1.60	1.58
	52.0	19199	18902	18803	18605	1.40	1.36	1.34	1.32
	57.0	19199	18902	18803	18704	1.24	1.19	1.16	1.15
	62.0	19298	19001	18803	18704	1.08	1.03	1.00	0.97
	64.4	19298	19001	18803	18704	1.01	0.94	0.91	0.88
577	-22.0	12646	12512	12445	12378	1.58	1.63	1.58	1.58
	-10.0	14550	14396	14320	14243	1.85	1.91	1.86	1.86
	0.0	16138	15967	15882	15796	2.07	2.15	2.08	2.08
	5.0	16987	16807	16717	16627	2.20	2.28	2.21	2.21
	14.0	18138	17946	17850	17754	2.34	2.43	2.35	2.35
	17.0	19002	18801	18700	18600	2.49	2.58	2.50	2.50
	22.0	18702	18504	18405	18306	2.39	2.40	2.40	2.40
	27.0	18306	18108	18108	18009	2.22	2.22	2.21	2.21
	32.0	17811	17613	17515	17416	2.06	2.04	2.04	2.03
	37.0	17910	17712	17515	17416	1.90	1.88	1.87	1.86
	42.0	18504	18306	18108	18009	1.74	1.71	1.70	1.69
	44.6	19206	19001	18902	18803	1.66	1.54	1.62	1.60
	52.0	19397	19100	19001	18803	1.42	1.38	1.36	1.33
	57.0	19397	19100	19001	18902	1.25	1.20	1.18	1.16
	62.0	19496	19199	19001	18902	1.10	1.04	1.01	0.98
	64.4	19496	19199	19001	18902	1.02	0.96	0.93	0.90

LEGEND

- **TC: Total Cooling Capacity (BTU/hr)**
- **S/T: Sensible Cooling Capacity Ratio**
- **PI: Power Input (kW)**
- **Extrapolated Data**

HEATING PERFORMANCE AT INDOOR DRY BULB TEMPERATURE SIZE 24K

AIRFLOW (CFM)	OUTDOOR DB (°F)	TC: TOTAL CAPACITY IN KILOWATTS				PI:TOTAL POWER IN KILOWATTS			
		Indoor Conditions (DB °F)				Indoor Conditions (DB °F)			
		60.8	68.0	71.6	75.2	60.8	68.0	71.6	75.2
630	-22.0	16573	16439	16306	16239	1.97	2.04	1.99	1.99
	-10.0	19069	18915	18761	18685	2.31	2.39	2.33	2.33
	0.0	21149	20979	20808	20723	2.59	2.68	2.61	2.62
	5.0	22262	22082	21903	21813	2.75	2.84	2.77	2.77
	14.0	23771	23579	23388	23292	2.93	3.03	2.95	2.96
	17.0	24903	24702	24501	24401	3.12	3.22	3.13	3.14
	22.0	24603	24405	24206	24107	3.01	3.02	3.03	3.04
	27.0	24206	23908	23809	23710	2.82	2.82	2.83	2.83
	32.0	23611	23313	23214	23016	2.63	2.62	2.62	2.62
	37.0	23710	23412	23313	23115	2.46	2.45	2.44	2.43
	42.0	24603	24305	24107	24008	2.29	2.27	2.26	2.25
	44.6	25519	25210	25111	24914	2.21	2.09	2.18	2.16
	52.0	25803	25408	25210	25012	1.95	1.91	1.89	1.87
	57.0	25902	25507	25309	25111	1.77	1.72	1.70	1.67
	62.0	26001	25606	25408	25210	1.59	1.54	1.51	1.49
	64.4	26100	25704	25507	25210	1.51	1.45	1.42	1.39
695	-22.0	16968	16766	16699	16632	1.99	2.06	2.00	2.01
	-10.0	19523	19292	19215	19137	2.33	2.42	2.35	2.36
	0.0	21653	21396	21310	21225	2.62	2.71	2.63	2.64
	5.0	22792	22522	22432	22341	2.77	2.87	2.79	2.80
	14.0	24337	24049	23952	23856	2.96	3.06	2.98	2.99
	17.0	25496	25194	25093	24992	3.14	3.26	3.16	3.17
	22.0	25099	24801	24702	24603	3.04	3.05	3.06	3.07
	27.0	24702	24405	24305	24206	2.85	2.85	2.86	2.86
	32.0	24008	23809	23611	23512	2.65	2.65	2.65	2.65
	37.0	24206	23908	23710	23611	2.48	2.47	2.46	2.46
	42.0	25099	24702	24603	24405	2.31	2.29	2.28	2.27
	44.6	26117	25704	25606	25408	2.24	2.11	2.20	2.18
	52.0	26298	25902	25704	25507	1.96	1.93	1.91	1.89
	57.0	26397	26001	25803	25606	1.78	1.74	1.71	1.69
	62.0	26495	26100	25902	25704	1.60	1.55	1.53	1.50
	64.4	26594	26199	26001	25704	1.52	1.46	1.43	1.40
759	-22.0	17035	16901	16768	16701	2.01	2.09	2.03	2.04
	-10.0	19601	19447	19293	19216	2.36	2.44	2.38	2.38
	0.0	21739	21568	21398	21313	2.64	2.74	2.67	2.68
	5.0	22882	22703	22524	22434	2.80	2.91	2.83	2.84
	14.0	24434	24242	24051	23955	2.99	3.10	3.02	3.02
	17.0	25597	25397	25196	25095	3.17	3.29	3.20	3.21
	22.0	25297	25099	24901	24801	3.08	3.09	3.10	3.10
	27.0	24901	24702	24504	24405	2.88	2.88	2.89	2.89
	32.0	24305	24008	23809	23710	2.68	2.68	2.68	2.67
	37.0	24405	24107	24008	23809	2.51	2.50	2.49	2.48
	42.0	25297	25000	24901	24702	2.33	2.31	2.30	2.29
	44.6	26311	26001	25902	25704	2.26	2.13	2.22	2.21
	52.0	26594	26199	26001	25803	1.98	1.94	1.92	1.91
	57.0	26693	26298	26100	25902	1.80	1.75	1.73	1.70
	62.0	26891	26495	26298	26001	1.61	1.57	1.54	1.51
	64.4	26990	26495	26298	26100	1.53	1.47	1.44	1.41

Manufacturer reserves the right to change, at any time, specifications and designs without notice and without obligations.

HEATING PERFORMANCE AT INDOOR DRY BULB TEMPERATURE SIZE 30K

AIRFLOW (CFM)	OUTDOOR DB (°F)	TC: TOTAL CAPACITY IN KILOWATTS				PI:TOTAL POWER IN KILOWATTS			
		Indoor Conditions (DB °F)				Indoor Conditions (DB °F)			
		60.8	68.0	71.6	75.2	60.8	68.0	71.6	75.2
712	-22.0	14629	14437	14373	14309	1.80	1.85	1.85	1.86
	-10.0	16832	16612	16538	16465	2.10	2.17	2.16	2.18
	0.0	18668	18424	18342	18261	2.36	2.43	2.43	2.45
	5.0	19650	19393	19307	19221	2.50	2.58	2.57	2.60
	14.0	20982	20708	20616	20524	2.67	2.75	2.74	2.77
	17.0	21982	21694	21598	21502	2.83	2.92	2.91	2.94
	22.0	22684	22387	22288	22189	2.79	2.84	2.87	2.90
	27.0	23378	23080	22981	22783	2.74	2.79	2.81	2.84
	32.0	23774	23477	23279	23180	2.69	2.74	2.76	2.78
	37.0	25062	24665	24566	24368	2.65	2.70	2.73	2.75
	42.0	27142	26845	26647	26448	2.62	2.67	2.69	2.72
	44.6	29432	29110	28417	28219	2.60	2.64	2.67	2.70
	52.0	30892	30496	30298	30001	2.54	2.58	2.60	2.62
	57.0	32180	31684	31486	31288	2.50	2.54	2.56	2.58
	62.0	33467	32972	32675	32477	2.45	2.49	2.51	2.53
	64.4	34061	33566	33269	33071	2.43	2.47	2.49	2.50
806	-22.0	14949	14758	14694	14630	1.81	1.87	1.86	1.88
	-10.0	17201	16980	16907	16833	2.13	2.19	2.18	2.21
	0.0	19077	18833	18751	18670	2.38	2.46	2.45	2.48
	5.0	20081	19823	19737	19652	2.53	2.61	2.60	2.62
	14.0	21442	21167	21076	20984	2.70	2.78	2.77	2.80
	17.0	22463	22175	22079	21983	2.86	2.96	2.94	2.97
	22.0	23180	22882	22783	22684	2.82	2.88	2.90	2.93
	27.0	23873	23576	23477	23279	2.76	2.82	2.84	2.87
	32.0	24269	23972	23774	23675	2.72	2.76	2.78	2.81
	37.0	25557	25260	25062	24864	2.68	2.73	2.76	2.77
	42.0	27736	27340	27142	27043	2.65	2.70	2.72	2.75
	44.0	30135	29704	29011	28813	2.63	2.67	2.70	2.73
	52.0	31486	31090	30892	30694	2.57	2.61	2.63	2.65
	57.0	32774	32378	32081	31883	2.52	2.56	2.58	2.60
	62.0	34061	33566	33368	33170	2.48	2.52	2.54	2.56
	64.0	34655	34259	33962	33764	2.46	2.50	2.51	2.53
895	-22.0	15026	14899	14771	14708	1.83	1.89	1.88	1.90
	-10.0	17289	17143	16996	16923	2.14	2.21	2.21	2.23
	0.0	19175	19012	18850	18769	2.40	2.48	2.48	2.50
	5.0	20184	20013	19842	19756	2.54	2.63	2.62	2.65
	14.0	21552	21369	21187	21096	2.71	2.81	2.80	2.83
	17.0	22578	22387	22196	22100	2.88	2.98	2.97	3.00
	22.0	23378	23180	22981	22882	2.85	2.90	2.93	2.96
	27.0	24071	23774	23675	23477	2.79	2.84	2.87	2.90
	32.0	24467	24170	24071	23873	2.74	2.78	2.81	2.84
	37.0	25854	25458	25260	25161	2.71	2.76	2.78	2.80
	42.0	28033	27637	27439	27241	2.68	2.73	2.75	2.77
	44.0	30431	30001	29308	29110	2.66	2.70	2.73	2.76
	52.0	31784	31387	31189	30991	2.60	2.64	2.66	2.68
	57.0	33170	32675	32477	32180	2.55	2.60	2.62	2.64
	62.0	34457	33962	33665	33467	2.51	2.55	2.57	2.59
	64.4	35051	34556	34358	34061	2.49	2.53	2.55	2.57

Manufacturer reserves the right to change, at any time, specifications and designs without notice and without obligations.

HEATING PERFORMANCE AT INDOOR DRY BULB TEMPERATURE SIZE 36K

AIRFLOW (CFM)	OUTDOOR DB (°F)	TC: TOTAL CAPACITY IN KILOWATTS				PI:TOTAL POWER IN KILOWATTS			
		Indoor Conditions (DB °F)				Indoor Conditions (DB °F)			
		60.8	68.0	71.6	75.2	60.8	68.0	71.6	75.2
865	-22.0	17815	17625	17498	17434	1.91	1.96	1.99	2.02
	-10.0	20498	20279	20133	20060	2.23	2.30	2.34	2.37
	0.0	22734	22491	22329	22248	2.51	2.58	2.62	2.65
	5.0	23930	23674	23504	23419	2.66	2.73	2.78	2.81
	14.0	25552	25279	25098	25007	2.83	2.92	2.96	3.00
	17.0	26769	26483	26293	26197	3.01	3.10	3.15	3.19
	22.0	27872	27574	27376	27277	3.02	3.11	3.16	3.21
	27.0	28963	28566	28368	28269	3.06	3.15	3.20	3.25
	32.0	29558	29260	29062	28864	3.09	3.19	3.24	3.29
	37.0	31343	30947	30748	30550	3.16	3.26	3.31	3.36
	42.0	34220	33823	33625	33327	3.23	3.34	3.39	3.44
	44.6	37246	36814	35923	35626	3.27	3.43	3.43	3.48
	52.0	39189	38694	38397	38200	3.35	3.46	3.51	3.56
	57.0	40970	40476	40179	39882	3.40	3.51	3.57	3.62
	62.0	42752	42158	41861	41564	3.46	3.57	3.63	3.68
	64.4	43642	43049	42752	42356	3.48	3.60	3.65	3.71
971	-22.0	18195	18004	17878	17814	1.93	1.98	2.01	2.04
	-10.0	20935	20716	20570	20497	2.26	2.32	2.36	2.39
	0.0	23219	22976	22814	22733	2.53	2.60	2.65	2.68
	5.0	24440	24185	24014	23929	2.68	2.76	2.80	2.84
	14.0	26097	25824	25642	25551	2.86	2.94	2.99	3.03
	17.0	27340	27054	26863	26768	3.04	3.13	3.18	3.22
	22.0	28467	28169	27971	27872	3.05	3.14	3.19	3.24
	27.0	29558	29161	28963	28864	3.08	3.18	3.23	3.28
	32.0	30252	29856	29657	29459	3.12	3.22	3.27	3.32
	37.0	32038	31641	31443	31244	3.19	3.29	3.34	3.39
	42.0	35013	34517	34319	34121	3.26	3.37	3.42	3.47
	44.6	38146	37606	36616	36418	3.30	3.46	3.46	3.51
	52.0	40080	39486	39288	38991	3.38	3.49	3.54	3.60
	57.0	41861	41267	40970	40773	3.43	3.54	3.60	3.65
	62.0	43642	43049	42752	42455	3.48	3.60	3.66	3.71
	64.4	44533	43939	43642	43346	3.51	3.63	3.68	3.74
1083	-22.0	18407	18153	18089	17962	1.94	2.00	2.03	2.06
	-10.0	21179	20887	20814	20668	2.28	2.34	2.38	2.42
	0.0	23489	23165	23084	22922	2.56	2.63	2.67	2.71
	5.0	24725	24384	24298	24128	2.71	2.79	2.83	2.87
	14.0	26401	26037	25946	25764	2.89	2.97	3.02	3.07
	17.0	27658	27277	27181	26991	3.07	3.16	3.21	3.26
	22.0	28764	28368	28269	28070	3.08	3.17	3.22	3.27
	27.0	29856	29459	29260	29062	3.12	3.21	3.26	3.31
	32.0	30550	30153	29955	29756	3.15	3.25	3.30	3.35
	37.0	32335	31938	31740	31542	3.23	3.33	3.38	3.43
	42.0	35410	34914	34617	34418	3.30	3.40	3.46	3.51
	44.6	38541	38002	37012	36814	3.34	3.50	3.50	3.55
	52.0	40476	39981	39684	39387	3.42	3.53	3.58	3.64
	57.0	42356	41762	41465	41168	3.47	3.59	3.64	3.70
	62.0	44137	43543	43247	42950	3.53	3.64	3.70	3.76
	64.4	45028	44434	44137	43840	3.55	3.67	3.73	3.79

Manufacturer reserves the right to change, at any time, specifications and designs without notice and without obligations.

APPLICATION DATA

Unit Selections

Select equipment that either matches or supports slightly more than the anticipated peak load. This provides better humidity control, fewer unit cycles, and less part-load operation.

For units used in spaces with high sensible loads, base equipment selection on unit sensible load, not on total anticipated load. Adjust for anticipated room wet bulb temperature to avoid undersizing the equipment.

Unit Mounting (Outdoor)

Refer to the unit's installation instructions for further details.

Unit leveling - For reliable operation, units should be level in all planes.

Clearance - Minimum clearance (see Fig. 7 — on page 9) must be provided for airflow. The condensing units are designed for free-flow application. Air inlets and outlets should not be restricted.

Unit location - A location which is convenient to installation and not exposed to strong winds. A location that can bear the weight of the outdoor unit and where the outdoor unit can be mounted in a level position.

Do not install the indoor or outdoor units in a location with special environmental conditions. For those applications, contact your sales representative.

System Operating Conditions

OPERATING RANGE MIN/MAX °F / °C

All sizes 6-36 (115V and 208/230V):

- **Cooling: -22/130 (-30/55)**
- **Heating: -22/86 (-30/30)**

NOTE: Without intervention, the unit may continue to run at temperatures outside of the specified operating temperatures. However, operation outside of the specified temperature range may result in decreased performance and may cause damage to the unit.

METERING DEVICES

The outdoor unit has an electronic expansion valve to manage the refrigerant flow of the connected fan coil.

DRAIN CONNECTIONS

Install drains to meet the local sanitation codes.

REFRIGERANT LINES

General refrigerant line sizing:

1. The outdoor units are shipped with a full charge of R410A refrigerant. All charges, line sizing, and capacities are based on runs of 25 ft. (7.6 m). For runs over 25 ft. (7.6 m), review "Long Line Applications:" on page 33 for the proper charge adjustments.
2. Refrigerant lines should not be buried in the ground. If it is necessary to bury the lines, do not bury more than 36-in (914 mm). Provide a minimum 6-in (152 mm) vertical rise to the service valves to prevent refrigerant migration.
3. Both lines must be insulated. Use a minimum of 1/2-in. (12.7 mm) thick insulation. Closed-cell insulation is recommended in all long-line applications.
4. Special consideration should be given to isolating the interconnecting tubing from the building structure. Isolate the tubing so vibration or noise is not transmitted into the structure.

Long Line Applications:

1. No change in line sizing is required.
2. Add refrigerant per the **Additional Charge Table**.

Additional Charge Table

UNIT SIZE	TOTAL LINE LENGTH ft (m)		ADDITIONAL CHARGE, oz/ft. ft (m)			
	Min	Max	10-25 (3-8)	>25-82 (8-25)	>82-98 (25-30)	>98-213 (30-65)
6	10 (3)	82 (25)	None	0.16		
9						
12						
18		98 (30)			0.16	
24		164 (50)		0.32		
30						
36		213 (65)				

CAUTION

When the outdoor unit is matched with a Multi-Family or Residential Fan Coil and due the need to braze the piping on the fan coil side it is **REQUIRED** to flow Nitrogen in the system while brazing the line set since a filter drier is not recommended to be used with these condensing units.

WIRING

All wires must be sized per NEC (National Electrical Code) or CEC (Canadian Electrical Code) and local codes. Use Electrical Data table MCA (minimum circuit amps) and MOCP (maximum over current protection) to correctly size the wires and the disconnect fuse or breakers respectively.

Recommended Connection Method for Power and Communication Wiring:

The main power is supplied to the outdoor unit. The field supplied 14/3 power/communication wiring, from the outdoor unit to the indoor unit, consists of four (4) wires and provides the power for the indoor unit. Two wires are high voltage AC power, one is communication wiring and the other is a ground wire. Wiring between indoor and outdoor unit is polarity sensitive. The use of BX wire is **NOT** recommended.

If installed in a high Electromagnetic field (EMF) area and communication issues exists, a 14/2 stranded shielded wire can be used to replace L2 and (S) between outdoor unit and indoor unit landing the shield onto ground in the outdoor unit only.

CAUTION

EQUIPMENT DAMAGE HAZARD

Failure to follow this caution may result in equipment damage or improper operation.

CAUTION

EQUIPMENT DAMAGE HAZARD

Failure to follow this caution may result in equipment damage or improper operation.

Be sure to comply with local codes while running wire from the indoor unit to the outdoor unit.

Every wire must be connected firmly. Loose wiring may cause the terminal to overheat or result in unit malfunction. A fire hazard may also exist. Ensure all wiring is tightly connected.

No wire should touch the refrigerant tubing, compressor or any moving parts.

Disconnecting means must be provided and shall be located within sight and readily accessible from the air conditioner.

NOTE: Matches with Multi-Family and Residential Fan Coils require separate power for the indoor and outdoor unit. A 24V interface kit is required for compatibility. Refer to the 24V Interface Kit Installation Manual.

Sound Pressure in Octave Bands

	Frequency (Hz)	63	125	250	500	1000	2000	4000	8000
12 K (115 V)	Cooling dB(A)	58.5	55.9	58.1	51.1	46.0	41.4	34.8	28.6
	Heating dB(A)	58.8	57.4	57.4	53.6	47.3	43.5	37.2	31.9
	Indoor dB(A)	40.8	33.0	34.3	34.1	33.7	26.6	19.4	14.1
6K (208V)	Cooling dB(A)	57.5	53.2	56.9	49.6	45.2	41.4	36.5	31
	Heating dB(A)	57.3	53.2	58.4	51.2	46.1	43.6	38.5	34.9
	Indoor dB(A)	38.1	30.9	33.6	33.5	31.7	25.9	22.6	16.7
9K (208V)	Cooling dB(A)	53.1	51.2	52.6	49.5	40.1	36.5	29.1	26.3
	Heating dB(A)	57.6	55.0	52.3	50.1	45.5	42.2	36.8	30.0
	Indoor dB(A)	45.2	38.8	38.1	40.8	38.9	35.1	24.0	14.8
12K (208V)	Cooling dB(A)	54.4	55.4	51.6	52.6	42.1	37.9	31.5	30.1
	Heating dB(A)	63.7	59.9	55.4	52.2	48.7	45.1	39.1	34.8
	Indoor dB(A)	39.5	31.0	33.3	32.5	31.5	23.9	17.9	14.4
18K (208V)	Cooling dB(A)	56.5	60.8	56.2	53.3	51.8	46.0	38.1	33.2
	Heating dB(A)	58.8	63.5	57.9	54.3	51.7	45.0	38.9	31.2
	Indoor dB(A)	39.5	41.5	41.9	41.6	43.0	37.5	33.5	21.4
24K (208V)	Cooling dB(A)	68.3	69.2	62.9	56.3	54.6	50.4	46.5	41.3
	Heating dB(A)	65.9	68.6	65.3	58.7	57.5	53.8	48.5	44.5
	Indoor dB(A)	44.3	38.8	42.9	39.4	40.5	34.5	26.2	25.6
30K (208V)	Cooling dB(A)	62.4	58.3	56.8	55.4	51.4	45.5	42.5	35.1
	Heating dB(A)	62.5	58.4	57.5	54.6	52.4	48.4	45.0	38.7
	Indoor dB(A)	47.2	38.9	45.8	42.3	42.2	37.6	28.4	23.8
36K (208V)	Cooling dB(A)	56.8	61.8	61.4	54.4	50.7	45.3	43.2	37.1
	Heating dB(A)	58.4	65.0	62.9	57.0	54.9	50.5	46.9	42.3
	Indoor dB(A)	43.5	40.6	45.6	42.2	41.9	37.3	28.6	21.5

Outdoor Unit Sound Pressure Test Conditions

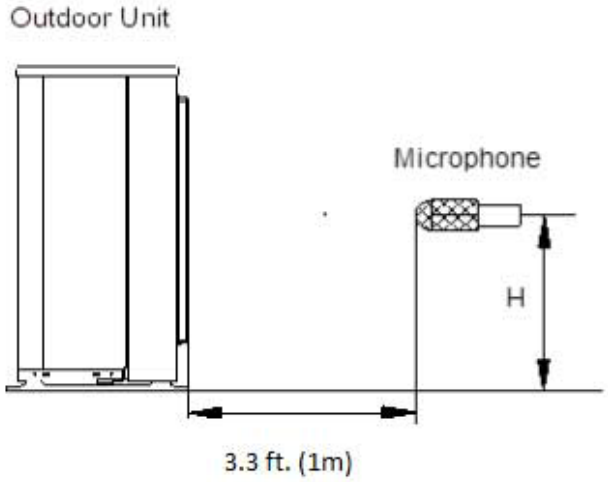

A220462

Fig. 9 —Outdoor Unit Sound Pressure Test

NOTE: H=0.5 x Height of outdoor unit

	INDOOR CONDITION		OUTDOOR CONDITION	
	DB	WB	DB	WB
Cooling	80.6°F (27°C)	66.2°F (19°C)	95°F (35°C)	75.2°F (24°C)
Heating	68°F (20°C)	59°F (15°C)	44.6°F (7°C)	42.8°F (6°C)

ELECTRICAL DATA

SYSTEM SIZE	12 K	9K/6K	12K	18K	24K	30K	36K
V-Ph-Hz	115-1-60	208/230-1-60	208/230-1-60	208/230-1-60	208/230-1-60	208/230-1-60	208/230-1-60
Power supply	3Wires: includes ground wire (Outdoor); 115V-1Ph-60Hz, 208/230V-1Ph-60Hz						
Interconnection to Indoor Unit	Yes						
Shielded Wire (Yes/No)	Yes						

*Permissible limits of the voltage range at which the unit will operate satisfactorily.

LEGEND

FLA - Full Load Amps
MCA - Minimum Circuit Amps
RLA - Rated Load Amps

Fan and Motor Specifications

SYSTEM SIZE		12K	6K	9K	12K	18K	24K	30K	36K
		(115 V)	(208/230 V)	(208/230 V)	(208/230 V)	(208/230 V)	(208/230 V)	(208/230 V)	(208/230 V)
Material	-	Acrylonitrile Styrene +20%GF	Acrylonitrile Styrene +20%GF	Acrylonitrile Styrene +20%GF	Acrylonitrile Styrene +20%GF	Acrylonitrile Styrene +20%GF	Acrylonitrile Styrene +20%GF	Acrylonitrile Styrene +20%GF	Acrylonitrile Styrene +20%GF
Type	-	ZL-421*133*8-3KN	ZL-421*133*8-3KN	ZL-434*144*8-3KN	ZL-434*144*8-3KN	ZL-535*133*12-3KFN	ZL-560*139*12-3KN	ZL-560*139*12-3KN	ZL-560*139*12-3KN
Diameter	inch	16.58 (421)	16.58 (421)	17.09 (434)	17.09 (434)	21.06 (535)	22.05 (560)	22.05 (560)	22.05 (560)
Height	inch	5.24 (133)	5.24 (133)	5.67(144)	5.67(144)	5.24 (133)	5.47 (139)	5.47 (139)	5.47 (139)
Model	-	ZKFN-34-10-1	ZKFN-34-10-1	ZKFN-34-10-1	ZKFN-34-10-1	ZKFN-80-8-3	ZKFN-120-8-2	ZKFN-120-8-2	ZKFN-120-8-2
Volts	V	115	310	208/230	208/230	208/230	208/230	208/230	208/230
Phase		310	3	310	310	310	310	310	310
Hertz	Hz	3	60	3	3	3	3	3	3
FLA	A	0.4	0.4	0.4	0.4	0.76	0.5	1.0	1.35
Rated HP	HP	0.045	0.045	0.045	0.045	0.11	0.16	0.16	0.16
Output	W	34	34	34	34	80	120	120	120
Type	-	DC	DC	DC	DC	DC	DC	DC	DC
Insulation class	-	B	B	B	B	E	E	E	E
Safe class	-	IP24	IP24	IP24	IP24	IPX4	IPX4	IPX4	IPX4
Input	W	100.3	100.3	100.3	100.3	120	173	173	173
Range of current	Amps	0.823±10%	0.823±10%	0.823±10%	0.823±10%	1±20%	1.48±10%	1.39±10%	1.39±10%
Rated current	Amps	0.89	0.89	0.89	0.89	0.82	1.21	1.21	1.21
Capacitor	μF	NA	NA	NA	NA	NA	NA	NA	NA
Speed	rev/min	800/700/600	800/700/600	730/660/560	730/660/560	780/700/550	950/800/500	900/700/500	950/700/500 950/700/500‡
Rated RPM	rev/min	800	800	730	730	780	950	900	950
Max. input	W	100.3	100.3	100.3	100.3	120.0	170.0	170.0	170.0

NOTE: ‡ Only Compatible with AHU

CONNECTION DIAGRAMS

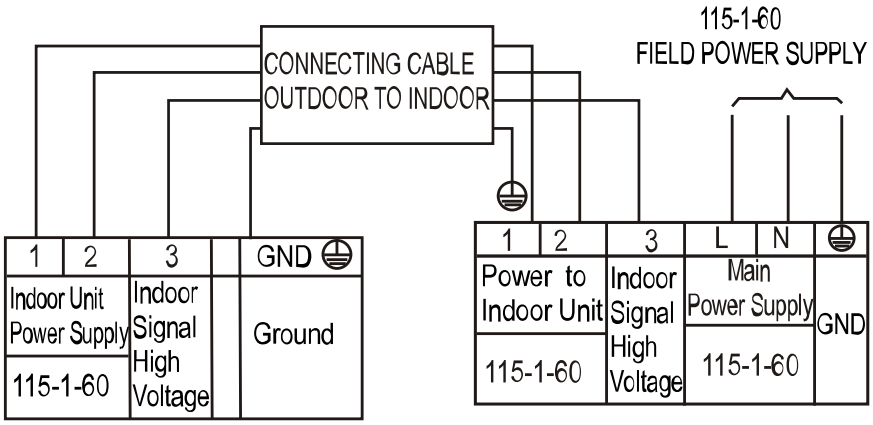

A220424

Fig. 10 —Connection Diagram 12K (115V)

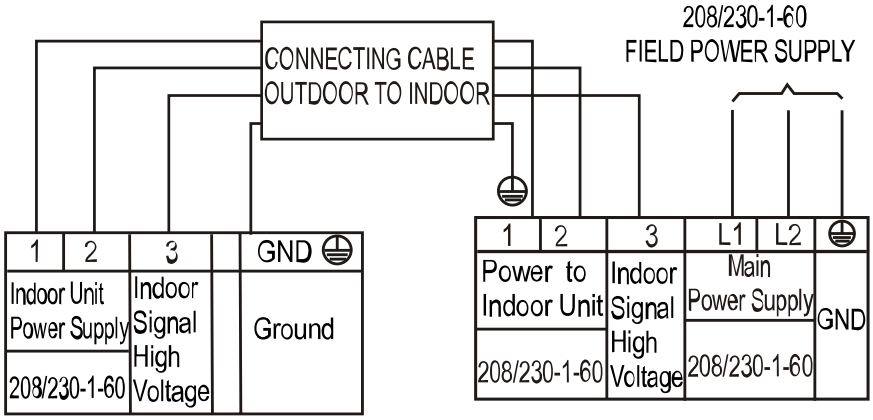

A220425

Fig. 11 —Connection Diagram Sizes 6K-36K (208/230-1-60V)

WIRING DIAGRAMS

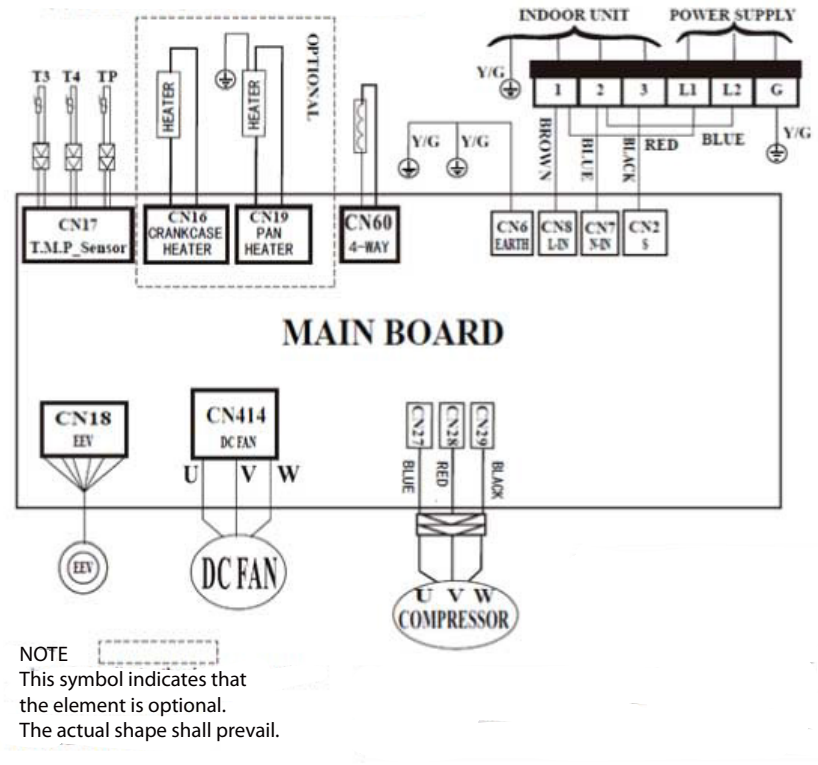

A220426

Fig. 12 —Wiring Diagram Size 12K (115V)

		CN 2/7/8	INPUT	230V	AC
		CN18	OUTPUT	0~12V	DC
		CN414	OUTPUT	0~310V	AC
		CN60	OUTPUT	230V	AC
		CN17	OUTPUT	0~5V	DC
T3	Condenser TEMP. Sensor	CN16	OUTPUT	230V	AC
T4	Ambient TEMP. Sensor	CN19	OUTPUT	230V	AC
TP	Discharge TEMP. Sensor	CN27/28/29	OUTPUT	0~310V	AC

WIRING DIAGRAMS (CONT)

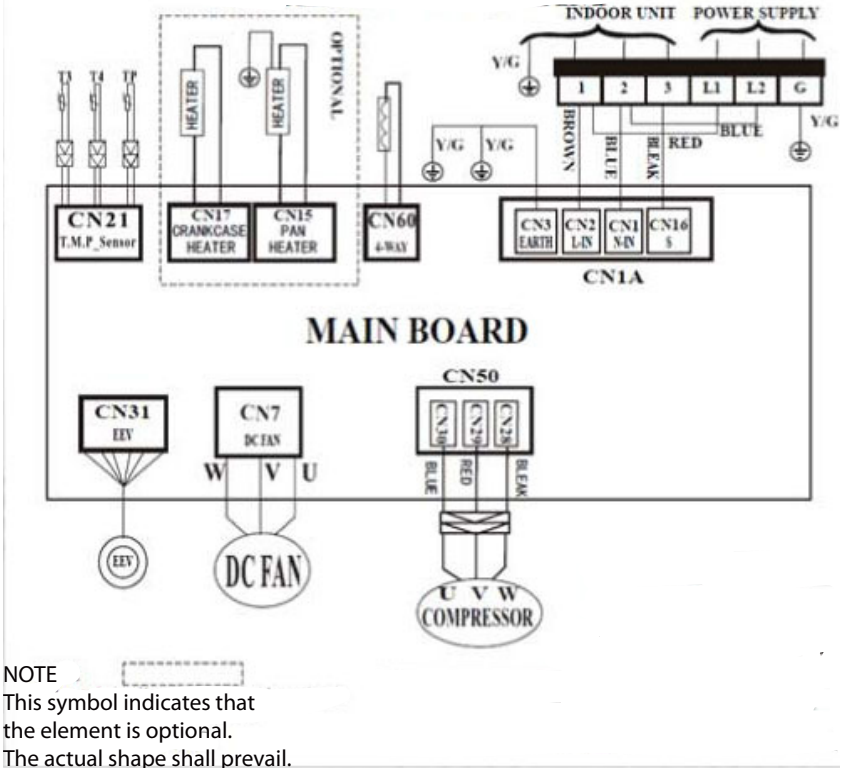

NOTE
This symbol indicates that
the element is optional.
The actual shape shall prevail.

A220427

Fig. 13 — Wiring Diagram - Sizes 6-12K (208/230V)

		CNIA	INPUT	230V	AC
		CN31	OUTPUT	0~12V	DC
		CN7	OUTPUT	0~310V	AC
		CN60	OUTPUT	230V	AC
		CN21	OUTPUT	0~5V	DC
T3	Condenser TEMP. Sensor	CN15	OUTPUT	230V	AC
T4	Ambient TEMP. Sensor	CN17	OUTPUT	230V	AC
TP	Discharge TEMP. Sensor	CN30	OUTPUT	0~310V	AC

WIRING DIAGRAMS (CONTINUED)

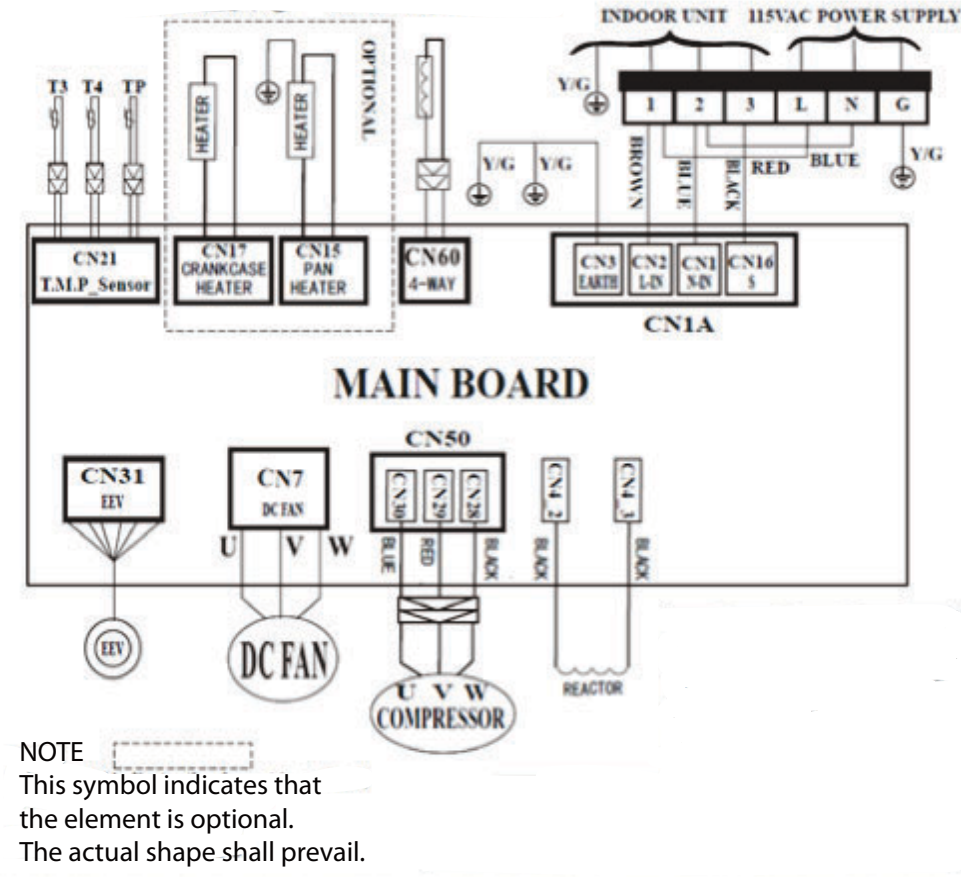

NOTE
This symbol indicates that
the element is optional.
The actual shape shall prevail.

A220428

Fig. 14 — Wiring Diagram Size 18K (208/230V)

		CNIA	INPUT	115V	AC
		CN4_2/4_3	INPUT	115V	AC
		CN7	OUTPUT	0~310V	AC
		CN60	OUTPUT	115V	AC
		CN21	OUTPUT	0~5V	DC
T3	Condenser TEMP. Sensor	CN15	OUTPUT	115V	AC
T4	Ambient TEMP. Sensor	CN17	OUTPUT	115V	AC
TP	Discharge TEMP. Sensor	CN50	OUTPUT	0~310V	AC

WIRING DIAGRAMS (CONTINUED)

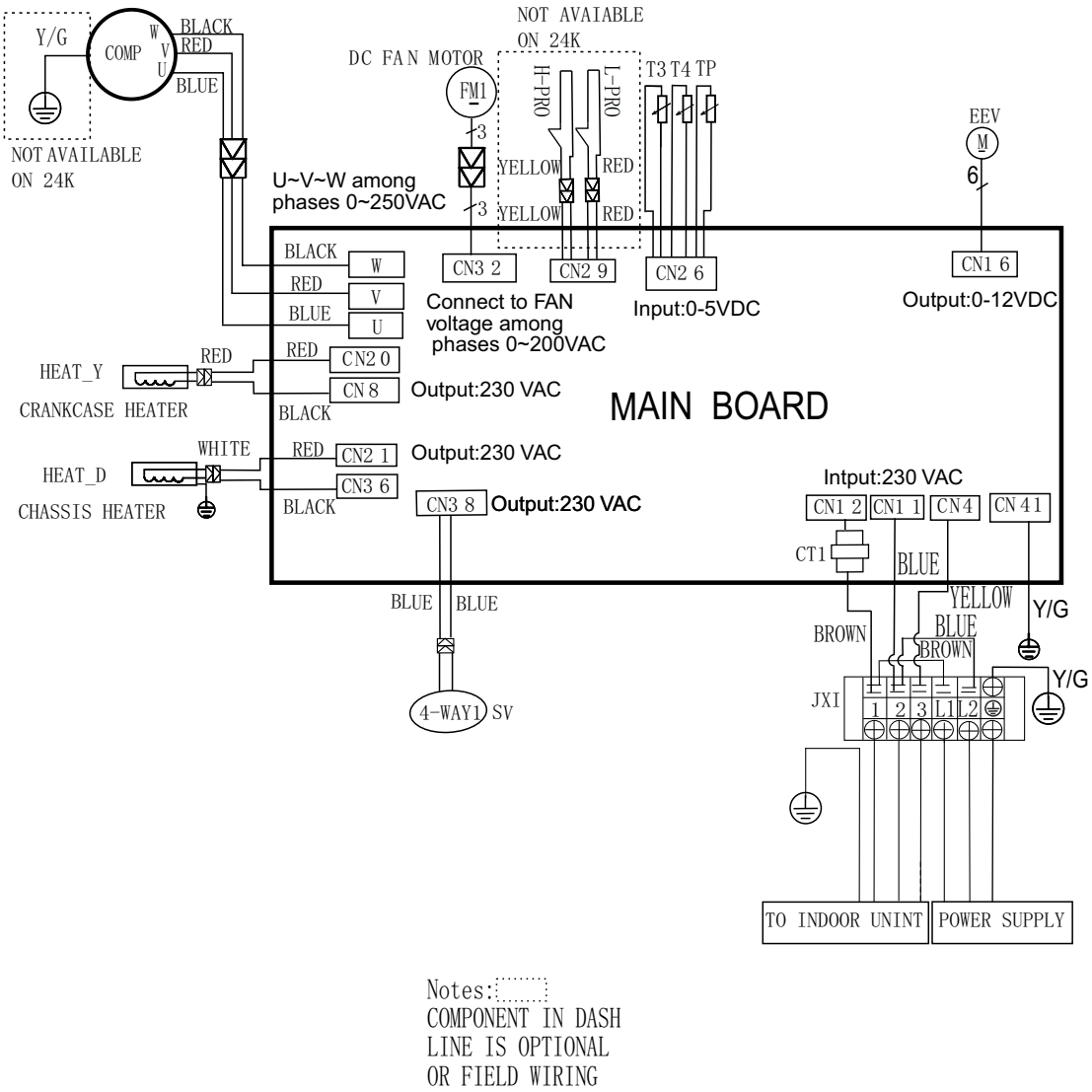

A220429

Fig. 15 — Wiring Diagram Sizes 24-36K (208/230V)

CODE	PART NAME
JX1	TERMINAL BLOCK
COMP_TOP	COMP. TOP OLP TEMP. SENSOR
EEV	ELECTRIC EXPANSIVE VALVE
FM1	DC FAN MOTOR
COMP	COMPRESSOR
HEAT_Y	CRAKCASE HEATER
CT1	AC CURRENT DETECTOR
H-PRO	HIGH PRESSURE SWITCH
L-PRO	LOW PRESSURE SWITCH
SV	REVERSE VALVE
TP	COMP. DISCHARGE TEMP. SENSOR
T3	COIL TEMP. SENSOR
T4	OUTDOOR AMBIENT TEMP. SENSOR
HEAT_D	CHASIS HEATER

GUIDE SPECIFICATIONS

HORIZONTAL DISCHARGE OUTDOOR UNITS

Size Range: 1/2 to 3 Ton Nominal Cooling and Heating Capacity Model Number: **38MARB**

Part 1 - GENERAL

1.01 System Description

1. Outdoor air-cooled split system compressor sections suitable for on-the-ground, rooftop, wall hung or balcony mounting. Units consist of a rotary compressor, an air-cooled coil, propeller-type draw-through outdoor fan, reversing valve (HP), accumulator (HP units), metering device(s), and a control box. Units discharge air horizontally as shown on the contract drawings. Units function as the outdoor component of an air-to-air heat pump system.
2. Units are to be used in a refrigeration circuit matched to ductless heat pump fan coil units.

1.02 Agency Listings

1. Unit construction complies with ANSI/ASHRAE 15, latest revision, and with the NEC.
2. Units are evaluated in accordance with UL standard 60335-2-40.
3. Units are listed in the CEC directory.
4. Unit cabinet is capable of withstanding 500-hour salt spray test per Federal Test Standard No. 141 (method 6061).
5. Air-cooled condenser coils are leak tested at 550 psig.

1.03 Delivery, Storage, And Handling

Units are shipped in one piece and are stored and handled per unit manufacturer's recommendations.

1.04 Warranty (For Inclusion By Specifying Engineer)

Part 2 - PRODUCTS

2.01 Equipment

A. **General:**

Factory assembled, single piece, air-cooled outdoor unit. Contained within the unit enclosure is all the factory wiring, piping, controls, and the compressor.

B. **Unit Cabinet:**

1. Unit cabinet is constructed of galvanized steel, bonderized and coated with a baked-enamel finish on the inside and outside.
2. Unit access panels is removable with minimal screws and provides full access to the compressor, fan, and control components.
3. The outdoor compartment is isolated and has an acoustic lining to assure quiet operation.

C. **Fans:**

1. Outdoor fans are the direct drive propeller type, and discharges air horizontally. Fans draw air through the outdoor coil.
2. Outdoor fan motors are totally enclosed, single phase motors with class E insulation and permanently lubricated ball bearings. The motor shall be protected by internal thermal overload protection.
3. The shaft has inherent corrosion resistance.
4. Fan blades are non-metallic and statically and dynamically balanced.
5. Outdoor fan openings are equipped with a PVC metal/mesh coated protection grille over the fan.

D. **Compressor:**

1. Compressor is the fully hermetic rotary type.
2. Compressor is equipped with an oil system, operating oil charge, and a motor.
3. Motor is NEMA rated class E, suitable for operation in a refrigerant atmosphere.
4. Compressor assembly is installed on rubber vibration isolators.

E. **Outdoor Coil:**

The coil is constructed of aluminum hydrophilic pre-coated fins mechanically bonded to seamless copper tubes, which are cleaned, dehydrated, and sealed.

F. **Refrigeration Components:**

Refrigerant circuit components include a brass external liquid line service valve with service gage port connections, a suction line service valve with a service gage connection port, service gage port connections on compressor suction and discharge lines with Schrader type fittings with brass caps, accumulator, reversing valve.

G. **Controls and Safeties:**

Operating controls and safeties are factory selected, assembled, and tested. The minimum control functions include the following:

1. Controls:
   - **A time delay control sequence is provided standard through the fan coil board**
   - **Automatic outdoor fan motor protection.**
2. Safeties:
   - **System diagnostics**
   - **Compressor motor current and temperature overload protection**
   - **Outdoor fan failure protection.**

H. **Electrical Requirements:**

1. Unit operates on single-phase, 60 Hz power at 115V for unit size 12 and 208/230V for unit sizes 06, 09, 12, 18, 24, 30, 36, and 36 (AHU Only) as specified.
2. Unit electrical power has a single point connection.
3. Unit Control voltage to the indoor fan coil is 0-15V DC.
4. All power and control wiring must be installed per NEC and all local electrical codes.

The unit has high and low voltage terminal block connections.

© 2022 Carrier. All rights reserved.

Manufacturer reserves the right to change, at any time, specifications and designs without notice and without obligations.