38MPRB
OUTDOOR UNIT SINGLE ZONE
DUCTLESS SYSTEM
SIZES 09 TO 18

Product Data

A220408

Fig. 1 —38MPRB Unit

NOTE: Images are for illustration purposes only. Actual models may differ slightly.

TABLE OF CONTENTS

INDUSTRY LEADING FEATURES / BENEFITS 1
BENEFITS 2
MODEL NUMBER NOMENCLATURE 3
STANDARD FEATURES AND ACCESSORIES 4
DIMENSIONS 5
CLEARANCES 7
SPECIFICATIONS 8
PERFORMANCE - HIGH WALL 8
COOLING PERFORMANCE - HIGH WALL 9
HEATING PERFORMANCE - HIGH WALL 10
APPLICATION DATA 11
WIRING 12
ELECTRICAL DATA 14
FAN AND MOTOR SPECIFICATIONS 14
WIRING DIAGRAMS 15
GUIDE SPECIFICATIONS 18

INDUSTRY LEADING FEATURES / BENEFITS

A PERFECT BLEND BETWEEN BUDGET LIMITS, ENERGY SAVINGS AND COMFORT

The ductless systems are a matched combination of an outdoor condensing unit and an indoor fan coil unit connected only by refrigerant tubing and wires.

The ductless system permits creative solutions to design problems such as:

- **Add-ons to current space (an office or family room addition)**
- **Special space requirements**
- **When changes in the load cannot be handled by the existing system**
- **When adding air conditioning to spaces that are heated by hydronic or electric heat and have no ductwork**
- **Historical renovations or any application where preserving the look of the original structure is essential.**

The ideal compliment to your ducted system when it is impractical or prohibitively expensive to use ductwork.

The compact indoor fan coil units take up very little space in the room and do not obstruct windows. The fan coils are attractively styled to blend with most room decors. Advanced system components incorporate innovative technology to provide reliable cooling performance at low sound levels.

BENEFITS

Inverter Technology

The inverter driven compressor is designed to run at various input power frequencies (Hz) which controls the compressor's motor speed.

Even Temperature – The control package, including the inverter, monitors the outdoor and indoor temperatures as they relate to the selected indoor set point and adjusts the compressor speed to match the load and keep the system operating continuously rather than cycling and creating temperature swings. This translates to higher comfort levels for the occupants.

Rapid Pull Down/Warm-Up – Comfort is increased by the inverter system's ability to ramp up the compressor speed enabling the system to reach the user selected room temperature set point quicker.

Humidity Control – Running the system for longer periods and continuously varying the compressor speed enhances the humidity control.

Individual Room Comfort

Maximum comfort is provided because each space can be controlled individually based on the usage pattern.

Low Sound Levels

When noise is a concern, ductless systems are the answer. The indoor units are whisper quiet. There are no compressors indoors, either in the conditioned space or directly over it, and there is none of the noise usually generated by air being forced through the ductwork.

When sound ordinances and proximity to neighbors demand quiet operation, the ductless systems unit is the right choice. With the inverter technology, these units run at lower speeds most of the time resulting in reduced sound levels.

Inverter Technology – Enhanced Economical Operation

Ductless systems are inherently economical to operate. Individual rooms are heated or cooled only when required, and since the air is delivered directly to the space, there is no need to use additional energy to move the air in the ductwork. This economical operation is enhanced further when the inverter system output matches the load resulting in a more efficient system.

Easy-To-Use Controls

The systems have microprocessor-based controls to provide the ultimate in comfort and efficiency. The user friendly wired and wireless remote controls provide the interface between the user and the unit.

Secure Operation

If security is an issue, outdoor and indoor units are connected only by refrigerant piping and wiring to prevent intruders from crawling through ductwork or wall openings. In addition, since the ductless system can be installed close to an outside wall so coils are protected from vandals and severe weather.

Fast Installation

This compact ductless system is simple to install. Only wires and piping need to run between the indoor and outdoor units. These units are fast and easy to install ensuring minimal disruption to customers in homes or the workplace. This makes the ductless systems the equipment of choice for retrofit applications.

Simple Servicing and Maintenance

Removing the top panel of the outdoor unit provides immediate access to the control compartment, providing the service technician access to the diagnostic LEDs to facilitate the troubleshooting process. In addition, the draw-thru design of the outdoor unit means that dirt accumulates on the outside surface of the coil. Coils can be cleaned quickly from the inside using a pressure hose and detergent.

On the indoor units, service and maintenance expense is reduced due to the permanent easy to clean filters. Also, error codes are displayed on the front panel to alert the user to certain system malfunctions.

Built-in Reliability

Ductless system indoor and outdoor units are designed to provide years of trouble-free operation. Both the indoor and outdoor units are well protected. Whenever the microprocessor detects abnormal conditions, the unit stops and an error code appears.

Inverter systems provide additional reliability due to the soft start. This refers to the ability of the inverter to start the compressor motor using reduced voltage and reduced current. This feature is beneficial from an electrical standpoint (eliminates current spikes) as well as an overall reliability standpoint due to reduced stress on all associated system components.

Agency Listings

All systems are listed with AHRI (Air conditioning, Heating, and Refrigeration Institute) and are certified per UL 60335-2-40 standard.

Manufacturer reserves the right to change, at any time, specifications and designs without notice and without obligations.

MODEL NUMBER NOMENCLATURE

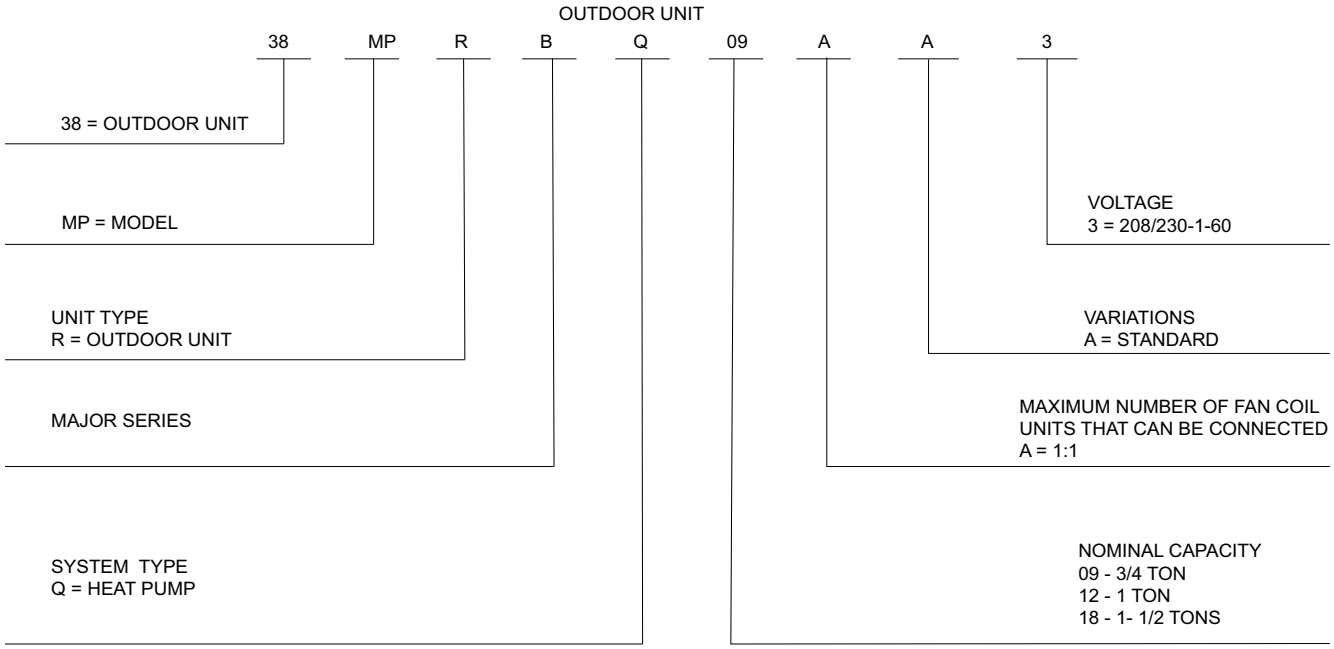

A221193

Use of the AHRI Certified TM Mark indicates a manufacturer's participation in the program For verification of certification for individual products, go to www.ahridirectory.org.

A22194

STANDARD FEATURES AND ACCESSORIES

Ease Of Installation	
Low Voltage Controls	S
Comfort Features	
Microprocessor Controls	S
Auto Restart Function	S
Auto Changeover	S
Low Ambient Cooling	S
Low Ambient Heating	S
Energy Saving Features	
Inverter Driven Compressor	S
46° F Heating Mode (Heating Setback)	S
Safety And Reliability	
3 Minute Time Delay For Compressor	S
High Compressor Discharge Temperature	S
Low Voltage Protection	S
Compressor Overload Protection	S
Compressor Over Current Protection	S
IPM Module Protection	S
Condenser High Temp Protection in Cooling Mode	S
Aluminum Golden Hydrophilic pre-coated fins	S
Ease Of Service And Maintenance	
Diagnostics	S
Liquid Line Pressure Taps	S
Application Flexibility	
Crankcase Heater	S
Base pan Heater	S

Legend

S - Standard
A - Accessory

Accessories

Outdoor Unit Model Number	Basepan Base Rubber Plugs RCD Part Number	Quantity per unit
38MPRBQ09AA3 **38MPRBQ12AA3**	12600801A00077	25
38MPRBQ18AA3	12600801A00117	5

NOTE: The basepan is built in with multiple holes for proper drainage during defrost. For applications where it is required to seal the holes and re-direct the condensate drain, rubber plugs are available through RCD.

Outdoor Units

Crankcase Heater

The crankcase heater is standard on all unit sizes. Heater clamps must be placed around the compressor oil sump.

Base pan Heater

The base pan heater is standard on all unit sizes.

Manufacturer reserves the right to change, at any time, specifications and designs without notice and without obligations.

DIMENSIONS

Sizes 9K and 12K

SYSTEM SIZE		HEIGHT (H) in. (mm)	WIDTH (W) in. (mm)	DEPTH (D) in. (mm)	WEIGHT-NET lbs. (kg)
9K	(208/230V)	26.50(673)	35.04(890)	13.46(342)	101.41(46)
12K	(208/230V)	26.50(673)	35.04(890)	13.46(342)	101.41(46)
18K	(208/230V)	31.89(810)	37.24(946)	16.14(410)	134.48(61)

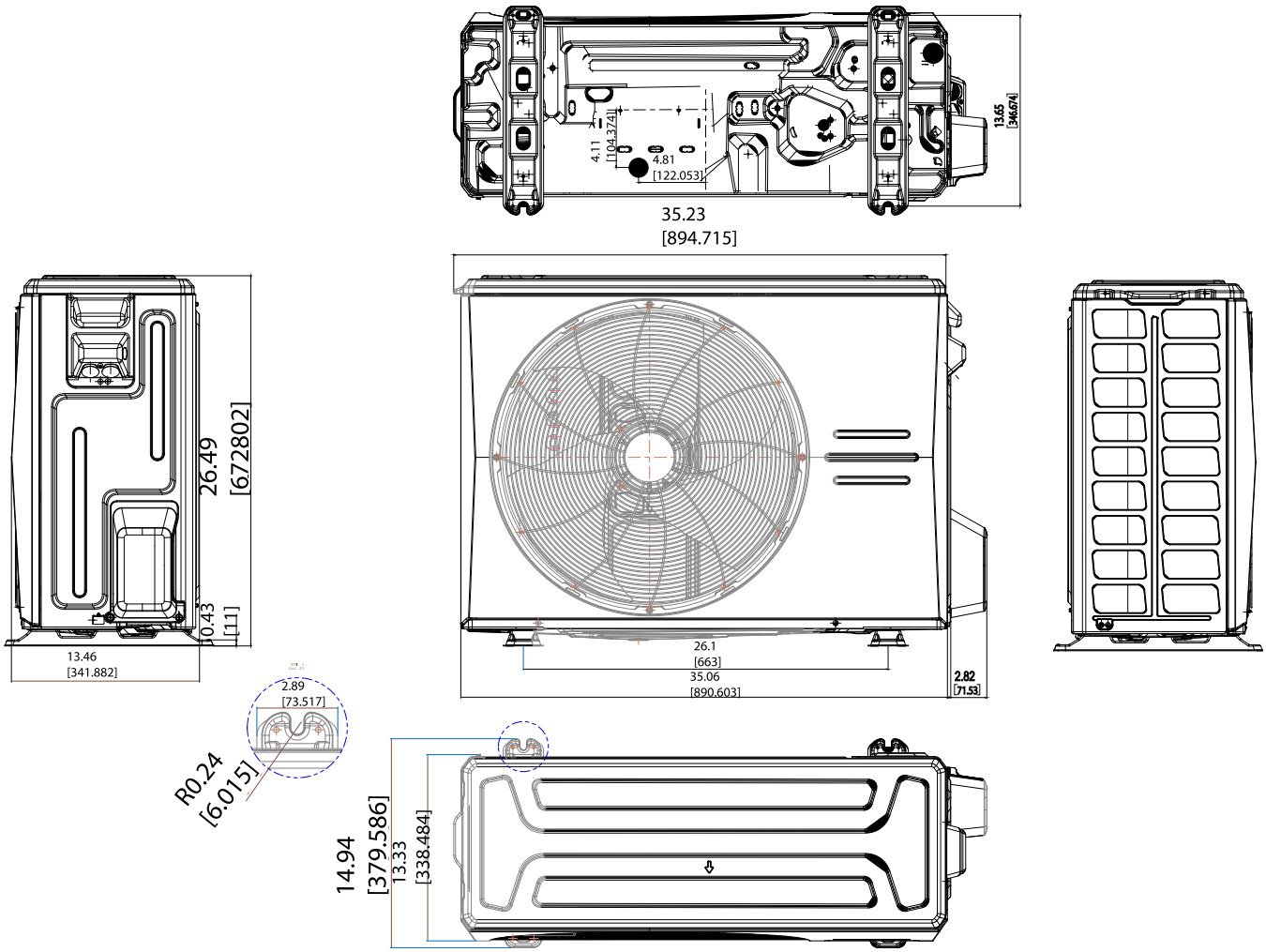

A221195

Fig. 2 —Sizes 9K and 12K

DIMENSIONS (CONT)

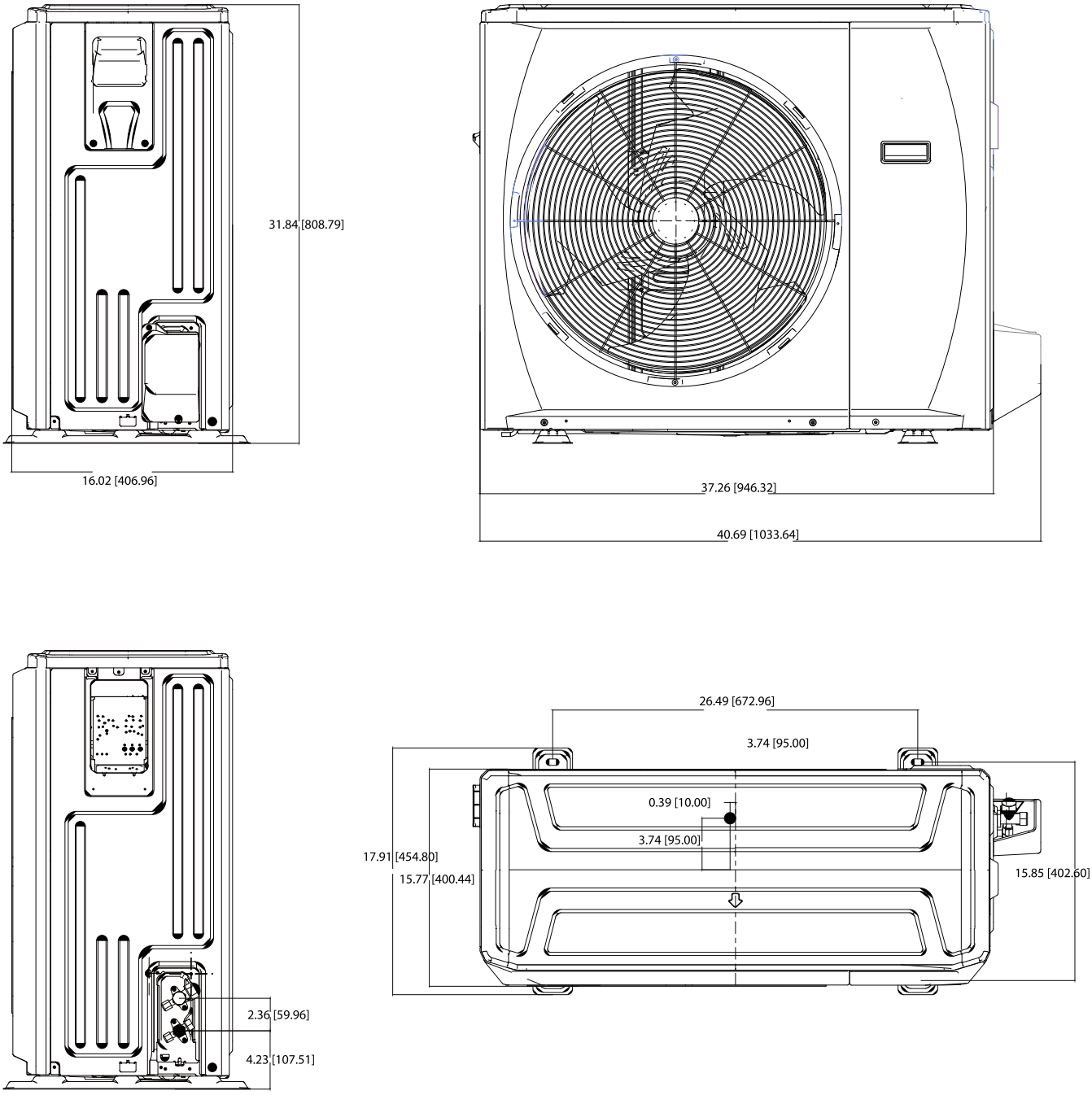

Fig. 3 — Size 18K

CLEARANCES

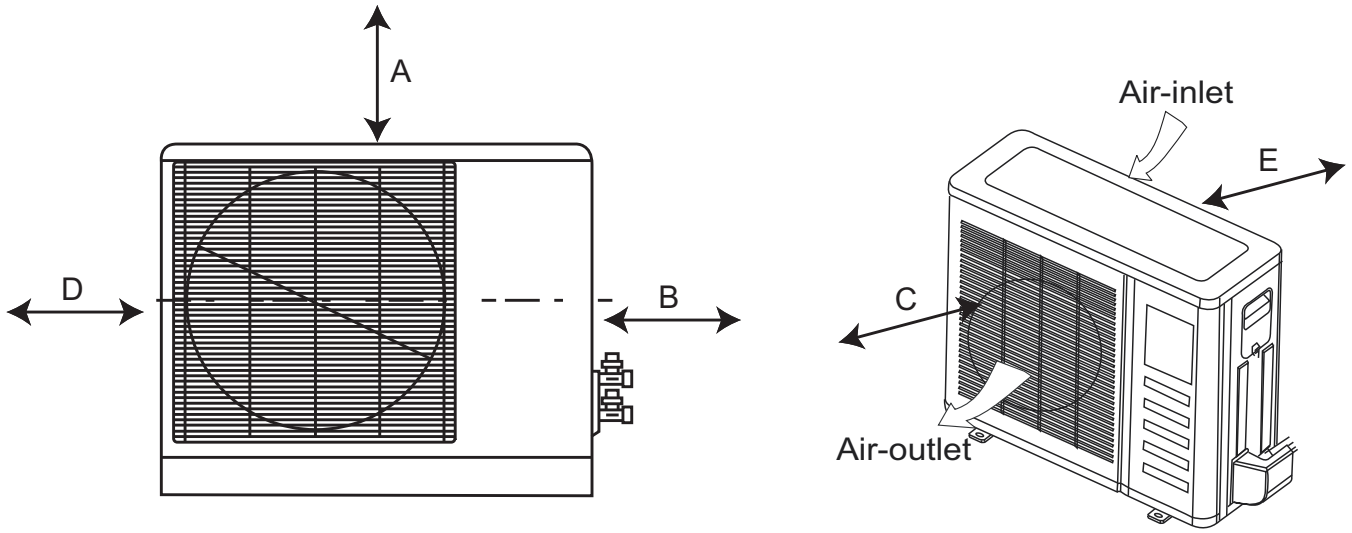

A22197

Fig. 4 —Unit Clearances

UNIT	MINIMUM VALUE in. (mm)
A	24 (610)
B	24 (610)
C	24 (610)
D	4 (101)
E	4 (101)

NOTE: The outdoor unit must be mounted at least 2in. (50mm) above the maximum anticipated snow depth.

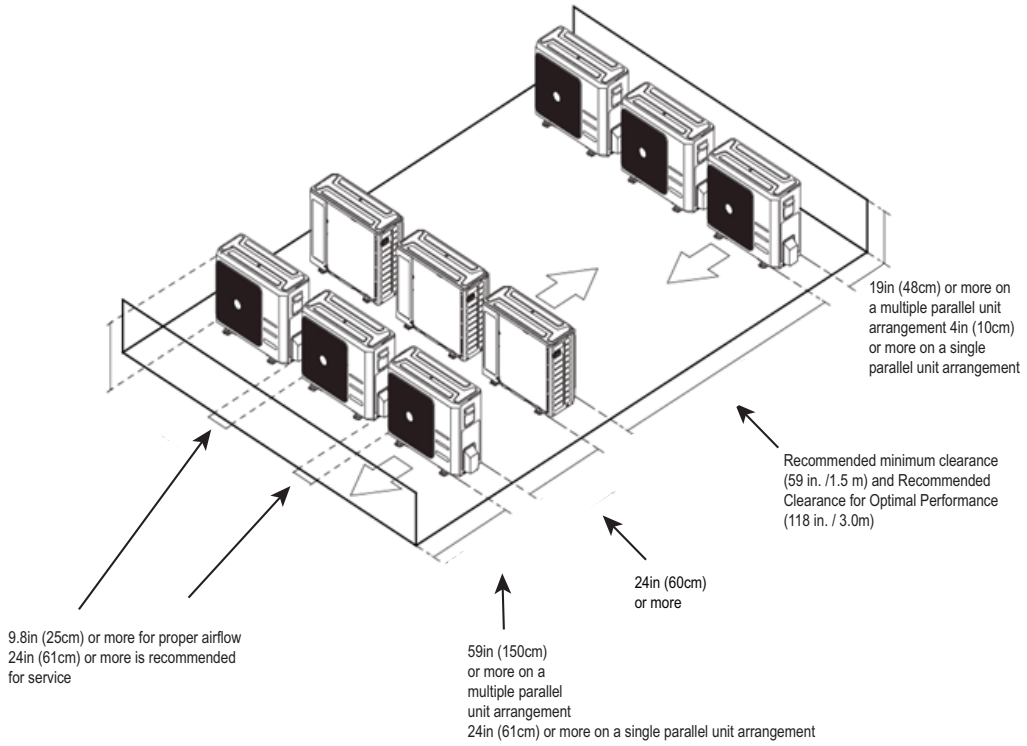

A220421

Fig. 5 — Clearances for multiple units

SPECIFICATIONS

SYSTEM	OUTDOOR SIZE		9K	12K	18K
Electrical	Voltage, Phase, Cycle	V/Ph/Hz	208/230-1-60	208/230-1-60	208/230-1-60
	MCA	A.	16	16	25
	Recommended Fuse Rating	A.	20	20	30
	MOCP - Fuse Rating	A.	20	20	35
	Short Circuit Current Rating (SCCR)	kA	2.4	2.4	2.4
Operating Range	Cooling Outdoor DB Min - Max	° F (° C)	-22~122 (-30~50)	-22~122 (-30~50)	-22~122 (-30~50)
	Heating Outdoor DB Min - Max	° F (° C)	-22~75 (-30~24)	-22~75 (-30~24)	-22~75 (-30~24)
Piping	Total Piping Length	ft (m)	82 (25)	82 (25)	164 (50)
	Piping Lift*	ft (m)	32.8 (10)	32.8 (10)	82 (25)
	Pipe Connection Size - Liquid	in (mm)	1/4 (6.35)	1/4 (6.35)	3/8” (9.52)
	Pipe Connection Size - Suction	in (mm)	1/2 (12.7)	1/2 (12.7)	5/8” (15.9)
Refrigerant	Type		R410A	R410A	R410A
	Charge	lbs (kg)	3.31 (1.5)	3.31 (1.5)	5.73 (2.6)
	Additional Refrigerant Charge (between Standard & Maximum Piping Lengths)	Oz/ft (g/m)	0.161 (15)	0.161 (15)	0.322 (30)
	Metering Device		EEV	EEV	EEV
Outdoor Coil	Face Area	Sq. Ft.	5.9	5.9	8.2
	No. Rows		1.6	1.6	2
	Fins per inch		20	20	20
	Circuits		5	5	4
Compressor	Compressor Type		Rotary Inverter	Rotary Inverter	Rotary Inverter
	Model		ATM115D43TFZ	ATM115D43TFZ	KTM240D43UKT
	Oil Type		VG74	VG74	VG74
	Oil Charge	Fl. Oz.	16.91	16.9	21.0
	Rated Current	RLA	9.33	9.3	14.8
Outdoor	Unit Width	in (mm)	35.04 (890)	35.04 (890)	37.24 (946)
	Unit Height	in (mm)	26.50 (673)	26.50 (673)	31.89 (810)
	Unit Depth	in (mm)	13.46 (342)	13.46 (342)	16.14 (410)
	Net Weight	lbs (kg)	101.41 (46)	101.41 (46)	134.48 (61)
	Airflow	CFM	1,765	1,765	2,235
	Sound Pressure	dB(A)	56.5	56.5	54.0

PERFORMANCE - HIGH WALL

	Outdoor Model		9K	12K	18K
	Indoor Model		9K	12K	18K
High Wall	Energy Star		YES	YES	YES
	Cooling System Tons		0.75	1	1.5
	Cooling Rated Capacity	Btu/h	9,000	12,000	18,000
	Cooling Cap. Range Min - Max	Btu/h	2,800~16,900	2,800~16,900	6,900~27,000
	SEER		42.5	32.0	28.2
	EER		16.0	13.8	14.5
	Heating Rated Capacity (47°F)	Btu/h	12,000	12,000	20,000
	Heating Rated Capacity (17°F)	Btu/h	6,900	6,900	11,000
	Heating Maximum Capacity (17°F)	Btu/h	18,100	18,100	24,400
	Heating Maximum Capacity (5°F)	Btu/h	13,900	13,900	25,400
	Heating Cap. Range Min - Max	Btu/h	5,100~19,000	5,100~19,000	9,900~31,000
	HSPF		15	14	13.7
	COP (47°F)	W/W	3.84	3.84	4.30
	COP (17°F)	W/W	2.89	2.89	2.80
	COP (5°F)	W/W	2.00	2.00	2.00

Manufacturer reserves the right to change, at any time, specifications and designs without notice and without obligations.

COOLING PERFORMANCE - HIGH WALL

MODEL	COOLING			OUTDOOR CONDITIONS (DB)												
	Indoor Conditions DB	WB		(-22°F) (-25°C)	-13°F (-25°C)	-4°F (-20°C)	0°F (-17°C)	5°F (-15°C)	17°F (-8°C)	47°F (8°C)	77°F (25°C)	86°F (30°C)	95°F (35°C)	104°F (40°C)	113°F (45°C)	122°F (50°C)
9K	69.8°F (21°C)	59°F (15°C)	TC	10.08	11.25	12.24	13.64	13.41	13.29	11.57	11.64	13.40	13.78	13.99	5.36	5.36
			SC	7.45	8.31	9.05	9.26	9.14	9.09	8.23	8.16	4.40	10.18	9.86	5.31	5.31
			Input	0.72	0.77	0.82	1.09	1.03	0.97	0.50	0.74	1.27	1.65	1.79	0.68	0.68
	75.2°F (24°C)	62.6°F (17°C)	TC	10.89	12.06	13.05	14.45	14.22	14.10	12.38	12.45	14.21	14.59	14.80	6.17	6.17
			SC	7.30	8.09	8.75	9.69	9.54	9.45	8.30	8.35	9.53	9.78	9.92	4.14	4.14
			Input	0.61	0.66	0.70	0.97	0.92	0.86	0.38	0.63	1.15	1.54	1.68	0.56	0.56
	80.6°F (27°C)	66.2°F (19°C)	TC	11.95	13.13	14.12	15.52	15.29	15.16	13.45	13.51	15.28	15.66	15.87	7.24	7.24
			SC	7.48	8.21	8.84	9.71	9.57	9.49	8.42	8.46	9.56	9.80	9.93	4.53	4.53
			Input	0.59	0.64	0.69	0.96	0.90	0.85	0.37	0.62	1.14	1.52	1.67	0.55	0.55
	89.6°F (32°C)	73.4°F (23°C)	TC	14.15	15.33	16.32	17.72	17.49	17.36	15.65	15.72	17.48	17.86	18.07	9.44	9.44
			SC	7.23	7.83	8.34	9.05	8.94	8.87	8.00	8.03	8.93	9.13	9.23	4.82	4.82
			Input	0.61	0.66	0.71	0.98	0.92	0.87	0.39	0.64	1.16	1.54	1.69	0.57	0.57
12K	69.8°F (21°C)	59°F (15°C)	TC	10.50	11.51	12.37	13.64	13.41	13.29	11.57	11.64	13.40	13.78	13.99	7.95	5.36
			SC	7.76	8.51	9.14	9.26	9.14	9.09	8.23	8.16	4.40	10.18	9.86	7.10	5.31
			Input	0.72	0.77	0.82	1.09	1.03	0.97	0.50	0.74	1.27	1.65	1.79	1.05	0.68
	75.2°F (24°C)	62.6°F (17°C)	TC	11.31	12.32	13.18	14.45	14.22	14.10	12.38	12.45	14.21	14.59	14.80	8.76	6.17
			SC	7.58	8.26	8.84	9.69	9.54	9.45	8.30	8.35	9.53	9.78	9.92	5.87	4.14
			Input	0.61	0.66	0.70	0.97	0.92	0.86	0.38	0.63	1.15	1.54	1.68	0.94	0.56
	80.6°F (27°C)	66.2°F (19°C)	TC	12.38	13.39	14.24	15.52	15.29	15.16	13.45	13.51	15.28	15.66	15.87	9.83	7.24
			SC	7.75	8.38	8.91	9.71	9.57	9.49	8.42	8.46	9.56	9.80	9.93	6.15	4.53
			Input	0.59	0.64	0.69	0.96	0.90	0.85	0.37	0.62	1.14	1.52	1.67	0.92	0.55
	89.6°F (32°C)	73.4°F (23°C)	TC	14.58	15.59	16.44	17.72	17.49	17.36	15.65	15.72	17.48	17.86	18.07	12.03	9.44
			SC	9.17	9.80	10.34	11.14	11.00	10.92	9.84	9.88	10.99	11.23	11.36	7.56	5.93
			Input	0.61	0.66	0.71	0.98	0.92	0.87	0.39	0.64	1.16	1.54	1.69	0.94	0.57
18K	69.8°F (21°C)	59°F (15°C)	TC	25.33	25.02	24.71	21.71	23.65	21.89	28.18	25.19	24.00	22.65	21.45	18.45	15.41
			SC	18.11	17.89	17.67	15.85	16.72	15.78	19.00	17.47	16.85	16.20	15.56	14.06	12.58
			Input	1.26	1.33	1.40	1.41	1.46	1.79	1.53	1.86	2.04	2.23	2.43	2.31	2.27
	75.2°F (24°C)	62.6°F (17°C)	TC	26.11	25.80	25.49	22.49	24.43	22.67	28.96	25.97	24.78	23.43	22.24	19.23	16.19
			SC	18.93	18.70	18.48	16.31	17.71	16.43	21.00	18.83	17.96	16.99	16.12	13.94	11.73
			Input	1.28	1.34	1.41	1.42	1.48	1.81	1.54	1.87	2.05	2.24	2.44	2.32	2.28
	80.6°F (27°C)	66.2°F (19°C)	TC	26.97	26.66	26.35	23.36	25.29	23.53	29.83	26.84	25.64	24.30	23.10	20.09	17.05
			SC	19.48	19.25	19.03	16.87	18.26	16.99	21.54	19.38	18.51	17.54	16.68	14.51	12.31
			Input	1.29	1.36	1.43	1.44	1.49	1.82	1.55	1.89	2.07	2.26	2.46	2.34	2.30
	89.6°F (32°C)	73.4°F (23°C)	TC	28.76	28.45	28.13	25.14	27.08	25.32	31.61	28.62	27.42	26.08	24.88	21.87	18.83
			SC	20.86	20.63	20.40	18.23	19.64	18.36	22.93	20.76	19.89	18.91	18.05	15.86	13.66
			Input	1.32	1.39	1.46	1.47	1.52	1.85	1.59	1.92	2.10	2.29	2.49	2.37	2.33

LEGEND:

DB - Dry Bulb
WB - Wet Bulb
TC - Total Net Capacity (1000 Btu/hour)
SC - Sensible Capacity (1000 Btu/hour)
Input - Total Power (kW)

NOTE: Data highlighted in gray is extrapolated data and not actual test data.

Manufacturer reserves the right to change, at any time, specifications and designs without notice and without obligations.

HEATING PERFORMANCE - HIGH WALL

Model	HEATING		OUTDOOR CONDITIONS (DB)											
	Indoor Conditions DB		-22°F (-30°C)	-13°F (-25°C)	-4°F (-20°C)	0°F (-17°C)	5°F (-15°C)	17°F (-8°C)	19.4°F (-7°C)	24.8°F (-4°C)	32°F (0°C)	39.2°F (4°C)	44.6°F (7°C)	53.6°F (12°C)
9K	59°F (15°C)	TC	9.01	10.73	11.21	13.94	14.57	17.71	18.17	19.51	21.05	19.10	19.10	14.72
		Input	1.62	1.77	2.03	1.96	2.03	2.24	2.28	2.54	2.54	1.92	1.73	1.14
		COP	1.63	1.78	1.62	2.08	2.10	2.32	2.33	2.25	2.42	2.91	3.24	3.78
	64.4°F (18°C)	TC	9.00	10.73	11.20	13.94	14.57	17.71	18.17	19.51	21.04	19.10	19.10	14.72
		Input	1.68	1.83	2.09	2.03	2.09	2.30	2.34	2.60	2.61	1.98	1.79	1.20
		COP	1.57	1.72	1.57	2.02	2.04	2.26	2.27	2.20	2.37	2.82	3.13	3.59
	69°F (20.5°C)	TC	9.00	10.73	11.20	13.94	14.57	17.70	18.16	19.50	21.04	19.10	19.09	14.71
		Input	1.62	1.77	2.03	1.96	2.03	2.24	2.28	2.54	2.54	1.92	1.73	1.14
		COP	1.63	1.78	1.62	2.08	2.10	2.32	2.33	2.25	2.42	2.91	3.24	3.78
	71.6°F (22°C)	TC	7.86	9.59	10.06	12.80	13.43	16.57	17.03	18.37	19.90	17.96	17.96	13.58
		Input	1.77	1.91	2.17	2.11	2.18	2.38	2.42	2.68	2.69	2.07	1.87	1.28
		COP	1.31	1.47	1.36	1.78	1.81	2.04	2.06	2.01	2.17	2.55	2.81	3.10
12K	59F° (15°C)	TC	9.01	10.73	11.21	13.94	14.57	17.71	18.17	19.51	21.05	19.10	19.10	14.72
		Input	1.62	1.77	2.03	1.96	2.03	2.24	2.28	2.54	2.54	1.92	1.73	1.14
		COP	1.63	1.78	1.62	2.08	2.10	2.32	2.33	2.25	2.42	2.91	3.24	3.78
	64.4°F (18°C)	TC	9.00	10.73	11.20	13.94	14.57	17.71	18.17	19.51	21.04	19.10	19.10	14.72
		Input	1.63	1.77	2.03	1.97	2.04	2.24	2.29	2.54	2.55	1.93	1.73	1.14
		COP	1.62	1.78	1.62	2.07	2.09	2.31	2.33	2.25	2.42	2.90	3.23	3.77
	69°F (20.5°C)	TC	9.00	10.73	11.20	13.94	14.57	17.70	18.16	19.50	21.04	19.10	19.09	14.71
		Input	1.63	1.78	2.04	1.97	2.04	2.25	2.29	2.55	2.55	1.93	1.74	1.15
		COP	1.62	1.77	1.61	2.07	2.09	2.31	2.32	2.24	2.41	2.90	3.22	3.75
	71.6°F (22°C)	TC	9.00	10.73	11.20	13.94	14.56	17.70	18.16	19.50	21.04	19.10	19.09	14.71
		Input	1.63	1.78	2.04	1.98	2.05	2.25	2.29	2.55	2.56	1.93	1.74	1.15
		COP	1.61	1.77	1.61	2.07	2.09	2.31	2.32	2.24	2.41	2.89	3.21	3.74
18K	59°F (15°C)	TC	14.33	18.95	23.61	23.38	25.50	28.25	28.63	29.69	32.33	30.80	29.47	28.35
		Input	2.91	3.17	3.45	3.28	3.59	3.46	3.43	3.66	3.79	3.67	2.63	2.22
		COP	1.44	1.75	2.01	2.09	2.08	2.39	2.45	2.38	2.50	2.46	3.28	3.74
	64.4°F (18°C)	TC	14.33	18.94	23.61	23.38	25.50	28.25	28.62	29.69	32.33	30.79	29.47	28.35
		Input	2.91	3.16	3.45	3.27	3.59	3.46	3.43	3.66	3.79	3.66	2.63	2.22
		COP	1.44	1.75	2.01	2.09	2.08	2.39	2.45	2.38	2.50	2.46	3.28	3.74
	69°F (20.5°C)	TC	14.33	18.94	23.60	23.38	25.50	28.24	28.62	29.69	32.33	30.79	29.47	28.35
		Input	2.91	3.16	3.45	3.27	3.59	3.46	3.43	3.66	3.79	3.66	2.63	2.22
		COP	1.44	1.75	2.01	2.09	2.08	2.39	2.45	2.38	2.50	2.46	3.28	3.75
	71.6°F (22°C)	TC	14.33	18.94	23.60	23.37	25.50	28.24	28.62	29.69	32.33	30.79	29.47	28.35
		Input	2.91	3.16	3.44	3.27	3.59	3.46	3.43	3.66	3.79	3.66	2.63	2.22
		COP	1.44	1.75	2.01	2.09	2.08	2.39	2.45	2.38	2.50	2.46	3.28	3.75

LEGEND

DB - Dry Bulb
TC - Total Net Capacity (1000 Btu/hour)
Input - Total Power (kW)
COP - W/W

Manufacturer reserves the right to change, at any time, specifications and designs without notice and without obligations.

APPLICATION DATA

Unit Selection

Select equipment that either matches or supports slightly more than the anticipated peak load. This provides better humidity control, fewer unit cycles, and less part-load operation. For units used in spaces with high sensible loads, base equipment selection on unit sensible load, not on total anticipated load. Adjust for anticipated room wet bulb temperature to avoid undersizing the equipment.

UNIT MOUNTING (OUTDOOR)

Refer to the unit's installation instructions for further details.

Unit leveling - For reliable operation, units should be level in all planes.

Clearance - Minimum clearance (see Fig. 4) must be provided for airflow. The condensing units are designed for free-flow application. Air inlets and outlets should not be restricted.

Unit location - A location which is convenient to installation and not exposed to strong winds. A location that can bear the weight of the outdoor unit and where the outdoor unit can be mounted in a level position. **Do not** install the indoor or outdoor units in a location with special environmental conditions. For those applications, contact your sales representative.

SYSTEM OPERATING CONDITIONS

OPERATING RANGE MIN / MAX °F (°C)		
	COOLING	HEATING
Outdoor DB	-22 / 122 (-30 / 50)	-22 / 75 (-30 / 24)

NOTE: Reference the product installation instructions for more information.

METERING DEVICES

The outdoor unit has an electronic expansion valve to manage the refrigerant flow of the connected fan coil.

DRAIN CONNECTIONS

Install drains to meet the local sanitation codes.

REFRIGERANT LINES

General refrigerant line sizing:

1. The outdoor units are shipped with a full charge of R410A refrigerant. All charges, line sizing, and capacities are based on runs of 25 ft. (7.6 m). For runs over 25 ft. (7.6 m), review the *Long Line Applications* section for the proper charge adjustments.
2. Refrigerant lines should not be buried in the ground. If it is necessary to bury the lines, do not bury more than 36-in (914mm). Provide a minimum 6-in (152 mm) vertical rise to the service valves to prevent refrigerant migration.
3. Both lines must be insulated. Use a minimum of 1/2-in. (12.7 mm) thick insulation. Closed-cell insulation is recommended in all long-line applications.
4. Special consideration should be given to isolating the interconnecting tubing from the building structure. Isolate the tubing so vibration or noise is not transmitted into the structure.

Long Line Applications:

1. No change in line sizing is required.
2. Add refrigerant per the "Additional Charge" table below.

ADDITIONAL CHARGE

UNIT SIZE	Total Piping Length ft (m)		Additional Charge, oz/ft. (m)	
	Min	Max	>10 - 25 (3 - 8)	>25 - 98 (8 - 30)
9	9.8 (3)	82 (25)	None	0.16
12				
18		164(50)		0.32

WIRING

All wires must be sized per NEC (National Electrical Code) or CEC (Canadian Electrical Code) and local codes. Use Electrical Data table MCA (minimum circuit amps) and MOCP (maximum over current protection) to correctly size the wires and the disconnect fuse or breakers respectively.

Recommended Connection Method for Power and Communication Wiring:

The main power is supplied to the outdoor unit. The field supplied 14/3 stranded wire with ground with a 600 volt insulation rating, power/communication wiring from the outdoor unit to indoor unit consists of four (4) wires and provides the power for the indoor unit. Two wires are line voltage AC power, one is communication wiring (S) and the other is a ground wire. Wiring between indoor and outdoor unit is polarity sensitive. The use of BX wire is NOT recommended.

If installed in a high Electromagnetic field (EMF) area and communication issues exists, a 14/2 stranded shielded wire can be used to replace L2 and (S) between outdoor unit and indoor unit landing the shield onto ground in the outdoor unit only.

⚠ CAUTION

EQUIPMENT DAMAGE HAZARD

Failure to follow this caution may result in equipment damage or improper operation.

Wires should be sized based on NEC and local codes.

⚠ CAUTION

EQUIPMENT DAMAGE HAZARD

Failure to follow this caution may result in equipment damage or improper operation.

Be sure to comply with local codes while running wire from the indoor unit to the outdoor unit.

Every wire must be connected firmly. Loose wiring may cause the terminal to overheat or result in unit malfunction. A fire hazard may also exist. Ensure all wiring is tightly connected.

No wire should touch the refrigerant tubing, compressor or any moving parts.

Disconnecting means must be provided and shall be located within sight and readily accessible from the air conditioner.

Connecting cable with conduit shall be routed through the hole in the conduit panel.

Manufacturer reserves the right to change, at any time, specifications and designs without notice and without obligations.

AIR FLOW DATA

Unit Size	9K	12K	18K
Outdoor (CFM)	1,765	1,765	2,235

SOUND PRESSURE

SYSTEM SIZE		9K	12K	18K
		(208/230 V)	(208/230 V)	(208/230 V)
Outdoor Sound Pressure Level	dB(A)	56.5	56.5	54.0
Outdoor Sound Power Level	dB(A)	64.5	64.5	62.0

SOUND PRESSURE IN OCTAVE BANDS

	Frequency (Hz)	63	125	250	500	1000	2000	4000	8000
9K	Cooling dB(A)	49.8	57.0	52.9	49.4	46.8	42.3	37.0	34.6
	Heating dB(A)	52.6	61.7	56.4	51.3	48.3	43.8	39.2	39.0
12K	Cooling dB(A)	59.2	49.8	57.0	52.9	49.4	46.8	42.3	37.0
	Heating dB(A)	60.6	52.6	61.7	56.4	51.3	48.3	43.8	39.2
18K	Cooling dB(A)	68.3	69.2	62.9	56.3	54.6	50.4	46.5	41.3
	Heating dB(A)	65.9	68.6	65.3	58.7	57.5	53.8	48.5	44.5

OUTDOOR UNIT SOUND PRESSURE TEST CONDITIONS

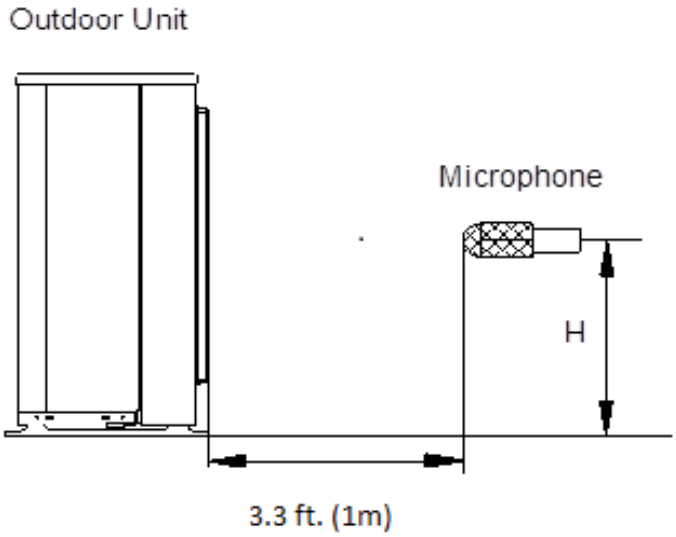

Fig. 6 —Outdoor Unit Sound Pressure Test Conditions

NOTE: H=0.5 x Height of outdoor unit

	INDOOR CONDITIONS		OUTDOOR CONDITIONS	
	DB	WB	DB	WB
COOLING	80.6°F (27°C)	66.2°F (19°C)	95°F (35°C)	75.2°F (24°C)
HEATING	68°F (20°C)	59°F (15°C)	44.6°F (7°C)	42.8°F (6°C)

Manufacturer reserves the right to change, at any time, specifications and designs without notice and without obligations.

ELECTRICAL DATA

		9K	12	18K
Heat Pump	Volts-PH-Hz	(208/230V)	(208/230V)	(208/230V)
	Max – Min Oper. Voltage	253-187	253-187	253-187
Power Supply	MCA	16	16	25
	MOCP	20	20	35
Compressor	RLA	9.33	9.33	14.8
Outdoor Fan Motor	FLA	0.78	0.78	0.50
	Rated HP	0.11	0.11	0.16
	Output	80	80	120

*Permissible limits of the voltage range at which the unit will operate satisfactorily.

LEGEND

FLA - Full Load Amps
MCA - Minimum Circuit Amps
MOCP - Maximum Over-Current Protection
RLA - Rated Load Amps

FAN AND MOTOR SPECIFICATIONS

			9K	12K	18K
			(208/230 V)	(208/230 V)	(208/230 V)
Outdoor Fan	Diameter	inch	21.06 (535)	21.06 (535)	22.05 (560)
	Height	inch	5.24 (133)	5.24 (133)	5.47 (139)
Outdoor Fan Motor	Model		ZKFN-80-8-3	ZKFN-80-8-3	ZKFN-120-8-2
	Volts	V	310	310	310
	Phase		3	3	3
	Hertz	Hz	60	60	60
	FLA		0.78	0.78	0.50
	Rated HP	HP	0.11	0.11	0.16
	Output	W	80	80	120
	Type		DC	DC	DC
	Insulation class		E	E	E
	Safe Class		IPX4	IPX4	IPX4
	Input	W	88	88	173
	Range of current	Amps	0.82±10%	0.82±10%	1.48±10%
	Rated current	Amps	0.82	0.82	1.21
	Speed	rev/min	NA	NA	NA
	Rated RPM	rev/min	800/600/360	800/600/360	950/800/500
	Max. input	W	780	780	950

Manufacturer reserves the right to change, at any time, specifications and designs without notice and without obligations.

WIRING DIAGRAMS

Sizes 09K and 12K

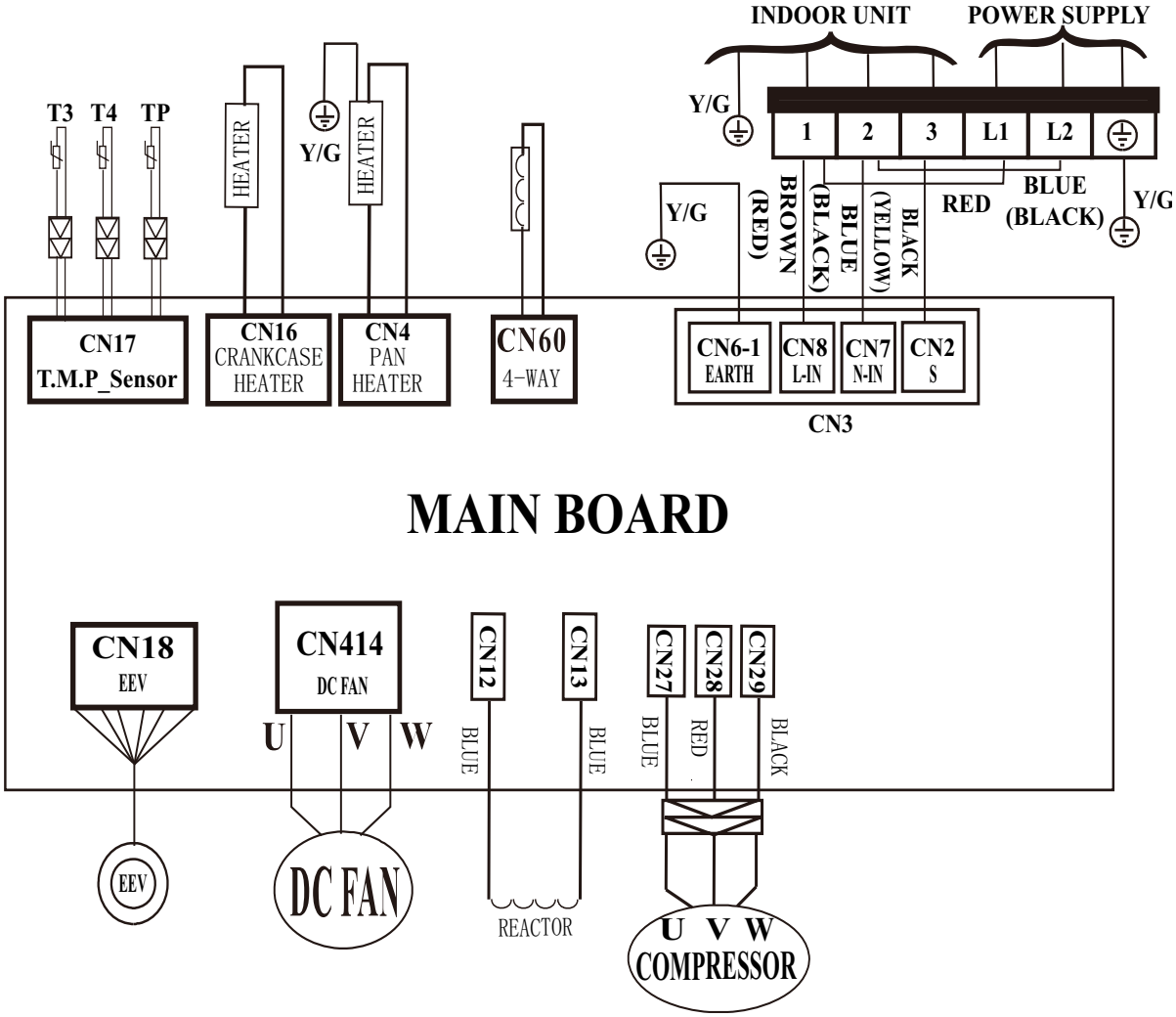

Fig. 7 —Wiring Diagram - Sizes 09K and 12K

		CN18	OUTPUT	12V	DC
		CN12/13	INPUT	230V	AC
		CN2/7/8	INPUT	230V	AC
		CN414	OUTPUT	0~310V	AC
		CN60	OUTPUT	230V	AC
		CN17	OUTPUT	0~5V	DC
T3	Condenser TEMP Sensor	CN16	OUTPUT	230V	AC
T4	Ambient TEMP Sensor	CN4	OUTPUT	230V	AC
TP	Discharge TEMP Sensor	CN27/28/29	OUTPUT	0~310V	AC

WIRING DIAGRAM (CONT)

Size 18K

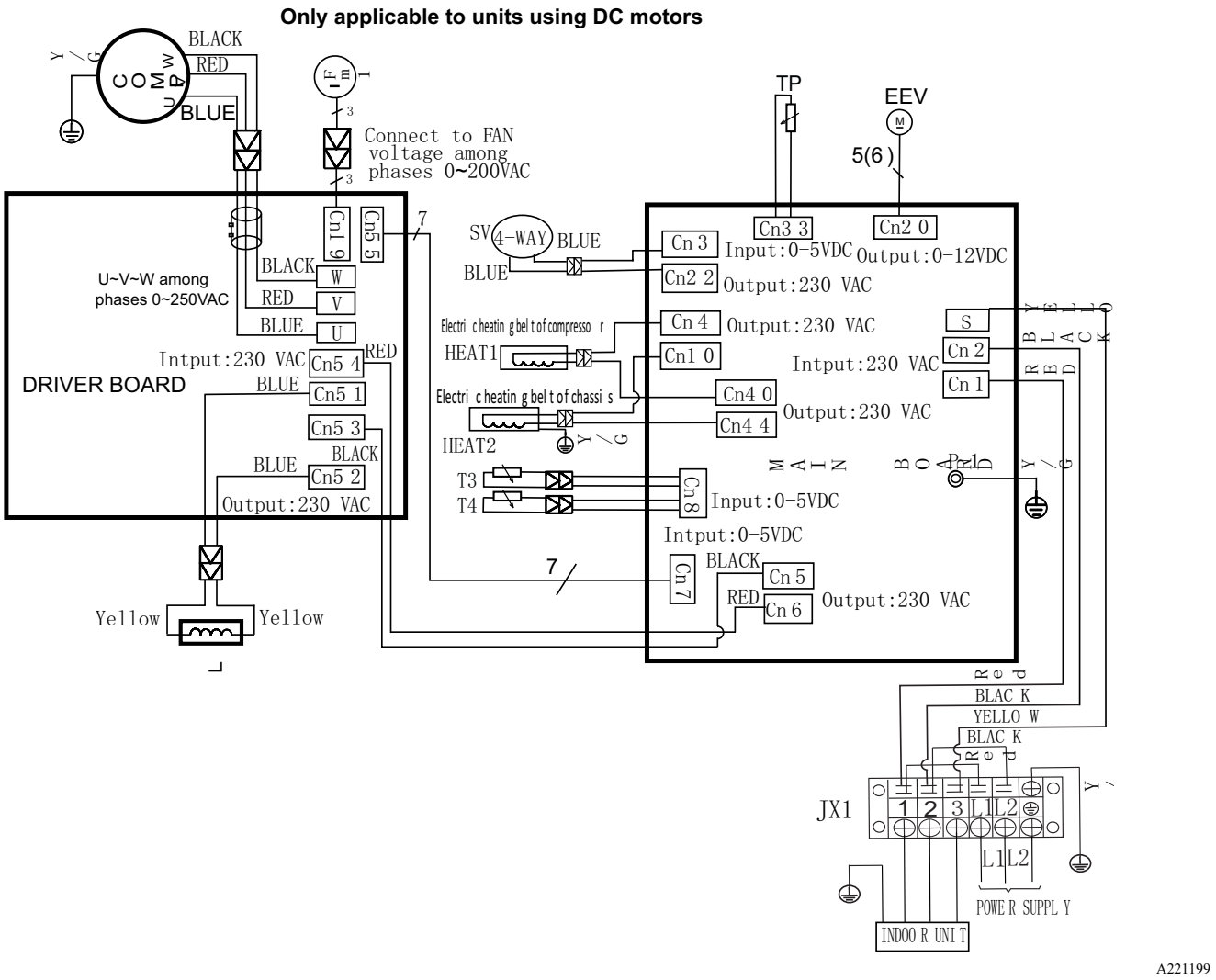

Fig. 8 — Size 18K

OUTDOOR UNIT MAIN BOARD	
CODE	**PART NAME**
COMP	COMPRESSOR
CAP1	FAN MOTOR CAPACITOR
EEV	ELECTRONIC EXPANSIVE VALVE
FM1	OUTDOOR DC FAN
FAN1	OUTDOOR AC FAN
HEAT	CRANKCASE HEATING
H-PRO	HIGH PRESSURE SWITCH
L	PFC INDUCTOR
L-PRO	LOW PRESSURE SWITCH
SV	4-WAY VALVE
TP	EXHAUST TEMPERATURE SENSOR
T3	CONDENSOR TEMPERATURE SENSOR
T4	OUTDOOR AMBIENT TEMPERATURE SENSOR
TH	HEATSINK TEMPERATURE SENSOR

WIRING DIAGRAM (CONT)

Size 18K

CODE	PART NAME	CODE	PART NAME
COMP	COMPRESSOR	**L**	PFC INDUCTOR
CAP1	FAN MOTOR CAPACITOR	**L-PRO**	LOW PRESSURE SWITCH
HEAT	CRANKCASE HEATING	**TP**	EXHAUST TEMPERATURE SENSOR
FM1	OUTDOOR DC FAN	**SV**	4-WAY VALVE
FAN1	OUTDOOR AC FAN	**T3**	CONDENSER TEMPERATURE SENSOR
EEV	ELECTRONIC EXPANSION VALVE	**T4**	OUTDOOR AMBIENT TEMPERATURE SENSOR
H-PRO	HIGH PRESSURE SWITCH	**TH**	HEATSINK TEMPERATURE SENSOR

OUTDOOR UNIT PFC & MAIN BOARD	
CODE	**PART NAME**
CN53~CN53	Input:230VAC High voltage
CN55	Output:Pin1(12VDC),Pin2(5VDC),Pin3(EARTH)
CN19	Pin1~Pin3:Connect to FAN voltage among phases 0~200VAC
U~V~W	Connect to compressor voltage among phases 0~200VAC
CN51~CN52	CN51~EARTH, CN52~EARTH Output:224-380VDC High Voltage

Manufacturer reserves the right to change, at any time, specifications and designs without notice and without obligations.

GUIDE SPECIFICATIONS

HORIZONTAL DISCHARGE OUTDOOR UNITS

Size Range: 3/4 to 1-1/2 Ton Nominal Cooling and Heating Capacity

Model Number: **38MPRB**

Part 1 - GENERAL

1.01 System Description

a. Outdoor air-cooled split system compressor sections suitable for on-the-ground, rooftop, wall hung or balcony mounting. Units consist of a rotary compressor, an air-cooled coil, propeller-type draw-through outdoor fan, reversing valve (HP), accumulator (HP units), metering device(s), and a control box. Units discharge air horizontally as shown on the contract drawings. Units function as the outdoor component of an air-to-air heat pump system.

b. Units are to be used in a refrigeration circuit matched to ductless heat pump fan coil units.

1.02 Agency Listings

a. Unit construction complies with ANSI/ASHRAE 15, latest revision, and with the NEC.

b. Units are evaluated in accordance with UL standard 1995.

c. Units are listed in the CEC directory.

d. Unit cabinet is capable of withstanding 500-hour salt spray test per Federal Test Standard No. 141 (method 6061).

e. Air-cooled condenser coils are leak tested at 550 psig.

1.03 Delivery, Storage, And Handling

Units are shipped in one piece and are stored and handled per unit manufacturer's recommendations.

1.04 Warranty (For Inclusion By Specifying Engineer)

Part 2 - PRODUCTS

2.01 Equipment

A. **General:**

Factory assembled, single piece, air-cooled outdoor unit. Contained within the unit enclosure is all the factory wiring, piping, controls, and the compressor.

B. **Unit Cabinet:**

1. Unit cabinet is constructed of galvanized steel, bonderized and coated with a baked-enamel finish on the inside and outside.
2. Unit access panels is removable with minimal screws and provides full access to the compressor, fan, and control components.
3. The outdoor compartment is isolated and has an acoustic lining to assure quiet operation.

C. **Fans:**

1. Outdoor fans are the direct drive propeller type, and discharges air horizontally. Fans draw air through the outdoor coil.
2. Outdoor fan motors are totally enclosed, single phase motors with class E insulation and permanently lubricated ball bearings. Motor shall be protected by internal thermal overload protection.
3. The shaft has inherent corrosion resistance.
4. Fan blades are non-metallic and statically and dynamically balanced.
5. Outdoor fan openings are equipped with a PVC metal/mesh coated protection grille over the fan.

D. **Compressor**:

1. Compressor is the fully hermetic rotary type.
2. Compressor is equipped with an oil system, operating oil charge, and a motor.
3. Motor is NEMA rated class E, suitable for operation in a refrigerant atmosphere.
4. Compressor assembly is installed on rubber vibration isolators.

E. **Outdoor Coil**:

The coil is constructed of aluminum golden hydrophilic pre-coated fins mechanically bonded to seamless copper tubes, which are cleaned, dehydrated, and sealed.

F. **Refrigeration Components**:

Refrigerant circuit components include a brass external liquid line service valve with service gage port connections, a suction line service valve with a service gage connection port, service gage port connections on compressor suction and discharge lines with Schrader type fittings with brass caps, accumulator, reversing valve.

G. **Controls and Safeties**:

Operating controls and safeties are factory selected, assembled, and tested. The minimum control functions include the following:

1.Controls:

a. A time delay control sequence is provided standard through the fan coil board.

b. Automatic outdoor fan motor protection.

2.Safeties:

a. System Diagnostics

b. Compressor motor current and temperature overload protection

c. Outdoor fan failure protection

H. **Electrical Requirements**:

a. Unit operates on single-phase, 60 Hz power at 208/230V as specified.

b. Unit electrical power has a single point connection.

c. Unit Control voltage to the indoor fan coil is 0-15V DC.

d. All power and control wiring must be installed per NEC and all local electrical codes.

e. The unit has high and low voltage terminal block connections.

© 2022 Carrier. All rights reserved.

Manufacturer reserves the right to change, at any time, specifications and designs without notice and without obligations.