D5MAHAQ

High Wall Ductless System
Sizes 06 to 36

Product Data

Fig. 1 – Sizes 06K - 36K

Fig. 2 – Remote Controller

NOTE: Images are for illustration purposes only. Actual models may differ slightly.

TABLE OF CONTENTS

INDUSTRY LEADING FEATURES / BENEFITS 1
MODEL NUMBER NOMENCLATURE 3
STANDARD FEATURES AND ACCESSORIES 4
DIMENSIONS 5
CLEARANCES 5
SPECIFICATIONS. 6
COMPATIBILITY TABLE 8
APPLICATION DATA 9
WIRING 9
AIRFLOW DATA 10
AIR THROW DATA 10
AIR MOISTURE 10
SOUND DATA. 11
CFM DATA 11
WIRING DIAGRAM 11
GUIDE SPECIFICATIONS 12

INDUSTRY LEADING FEATURES / BENEFITS

A PERFECT BALANCE BETWEEN BUDGET LIMITS, ENERGY SAVINGS AND COMFORT.

The **D5MAHAQ** series ductless systems are a matched combination of an outdoor condensing unit and an indoor fan coil unit connected only by refrigerant tubing and wires.

The fan coil is mounted on the wall, near the ceiling. This selection of fan coils permits creative solutions to design problems such as:

- Add-ons to current space (an office or family room addition)
- Special space requirements
- When changes in the load cannot be handled by the existing system
- When adding air conditioning to spaces that are heated by hydronic or electric heat and have no ductwork
- Historical renovations or any application where preserving the look of the original structure is essential.

The ideal compliment to your ducted system when it is impractical or prohibitively expensive to use ductwork. These compact indoor fan coil units take up very little space in the room and do not obstruct windows. The fan coils are attractively styled to blend with most room decors.

Advanced system components incorporate innovative technology to provide reliable cooling performance at low sound levels.

LOW SOUND LEVELS

When noise is a concern, the ductless systems are the answer. The indoor units are whisper quiet. There are no compressors indoors, either in the conditioned space or directly over it, and there is none of the noise usually generated by air being forced through ductwork.

SECURE OPERATION

If security is an issue, outdoor and indoor units are connected only by refrigerant piping and wiring to prevent intruders from crawling through ductwork. In addition, since the outdoor units can be installed close to an outside wall, coils are protected from vandals and severe weather.

FAST INSTALLATION

This compact ductless system is simple to install. A mounting bracket is standard with the indoor units and only wire and piping need to be run between the indoor and outdoor units. These units are fast and easy to install ensuring minimal disruption to customers in the home or workplace. This makes the D5MAHAQ ductless systems the equipment of choice, especially in retrofit situations.

SIMPLE SERVICING AND MAINTENANCE

Removing the top panel on outdoor units provides immediate access to the control compartment, providing a service technician access to check unit operation. In addition, the draw-thru design of the outdoor section means that dirt accumulates on the outside surface of the coil.Coils can be cleaned quickly from the inside using a pressure hose and detergent.

On all indoor units, the New Removable Blower assembly and Hood Style cover make maintenance and service less complicated.

Additionally, due to Newly Designed, easy-to-use and cleanable filters, service and maintenance expense is reduced. In addition, these high wall systems have extensive self-diagnostics to assist in troubleshooting.

BUILT-IN RELIABILITY

Ductless system indoor and outdoor units are designed to provide years of trouble-free operation.

The high wall indoor units include protection against freeze-up and high evaporator temperatures on heat pumps.

The condensing units on heat pumps are protected by a three minute time delay before the compressor starts the over-current protection and the high temperature protection.

INDIVIDUAL ROOM COMFORT

Maximum comfort is provided because each space can be controlled individually based on usage pattern. The air sweep feature provided permits optimal room air mixing to eliminate hot and cold spots for occupant comfort. Each unit is equipped with a New Humidity Sensor to keep your space comfortable. Year-round comfort can be provided with heat pumps.

ECONOMICAL OPERATION

The ductless system design allows individual room heating or cooling when required. Equipped with a New Occupancy Sensor, the system can be set to only operate when the room is being utilized. There is no need to run large supply-air fans or chilled water pumps to handle a few spaces with unique load patterns. In addition, because air is moved only in the space required, no energy is wasted while air moves through the ducts.

EASY-TO-USE CONTROLS

The high wall units have microprocessor-based controls to provide the ultimate in comfort and efficiency. The user friendly wireless remote control provides the interface between the user and the unit.

ACCESSORIES

Customizing these ductless systems to your application is easily accomplished. Adding a condensate pump accessory to the high wall fan coil provides installation flexibility.

OPTIONAL WIRED CONTROLLER (KSACN1401AAA, KSACN1201AAA)

Optional 24V Interface for 3rd Party Control

Optional Wi-Fi Kit for Smart Phone Control

AGENCY LISTING

All systems are listed with AHRI (Air Conditioning, Heating & Refrigeration Institute), and ETL.

Indoor Features

- Intelligent Sensor
- Humidity Control
- ECO
- Turbo
- Sleep
- Timer
- Follow Me
- Active Clean (i-Clean)
- FP Function (46F Heating)
- Silent Mode
- Gear
- LED (turn ON/OFF the indoor display LED)
- Horizontal Swing
- Vertical Swing
- 1% – 100% Fan Speed Setting
- Breeze Away

Manufacturer reserves the right to change, at any time, specifications and designs without notice and without obligations.

MODEL NUMBER NOMENCLATURE

D5M A H A Q 09 X A 3

D5M = INDOOR DUCTLESS UNIT

A = MODEL

SYSTEM TYPE
H = HIGH WALL

A = MAJOR SERIES

SYSTEM TYPE
Q = HEAT PUMP

VOLTAGE
1 = 115 - 1 - 60
3= 208/230 - 1 - 60

A = STANDARD

MAXIMUM NUMBER OF FAN COIL UNITS THAT CAN BE CONNECTED TO THE OUTDOOR UNIT
X = INDOOR UNIT

NOMINAL CAPACITY

06 - 1/2 TON	24 - 2 TONS
09 - 3/4 TON	30 - 2.5 TONS
12 - 1 TON	33 - 2.75 TONS
18 - 1.5 TONS	36 - 3 TONS

Use of the AHRI Certified TM Mark indicates a manufacturer's participation in the program For verification of certification for individual products, go to www.ahridirectory.org.

STANDARD FEATURES AND ACCESSORIES

Table 1 – Standard Accessories

Ease Of Installation	
Mounting Brackets	S
Low Voltage Controls	S
Comfort Features	
Microprocessor Controls	S
Wired Remote Controller	A
Wireless Remote Controller	S
Automatic Up-Down Airflow Louver Swing	S
Air Direction Control	S
Auto Restart Function	S
Cold Blow Protection On Heat Pumps	S
Freeze Protection Mode on Heat Pumps	S
Turbo Mode	S
Silence Mode	S
Auto Changeover on Heat Pumps	S
Follow Me	S
Energy Saving Features	
Sleep Mode	S
Stop/Start Timer	S
46° F Heating Mode (Heating Setback)	S
Safety And Reliability	
Indoor Coil Freeze Protection	S
Indoor Coil High Temp Protection in Heating Mode	S
Aluminum Hydrophilic pre-coated fins	S
Leak Mitigation Sensor	S
Ease Of Service And Maintenance	
Cleanable Filters	S
Diagnostics	S
Carbon Filter	S
Application Flexibility	
Condensate Pumps	A

Legend
S - Standard
A - Accessory

Table 2 – Accessories

Accessory No.	Description	For Models
	MANUAL	ALL SIZES
	DRAIN JOINT	ALL SIZES
	SEAL	ALL SIZES
	MOUNTING PLATE + CARDBOARD	ALL SIZES
	ANCHOR	ALL SIZES
	MOUNTING PLATE SCREW	ALL SIZES
	BATTERIES	ALL SIZES
	REMOTE CONTROLLER HOLDER	ALL SIZES
	REMOTE CONTROLLER HOLDER SCREW	ALL SIZES
	SMALL FILTER	ALL SIZES
	TRANSFER CONNECTOR	ALL SIZES
	COPPER NUT	
KSACN1201AAA	WIRED REMOTE CONTROL	ALL SIZES
KSACN1401AAA	WIRED REMOTE CONTROL WITH BUILT-IN WIFI	ALL SIZES
KSAIF0701AAA	WI-FI KIT WITH OTA FEATURE	ALL SIZES

Manufacturer reserves the right to change, at any time, specifications and designs without notice and without obligations.

DIMENSIONS

Table 3 – Heat Pump Models

System Size		12K 115V	6K	9K	12K	18K	24K	30K	33K	36K
		115V	(208/230 V)							
Height (H)	in (mm)	11.61(295)	11.61(295)	11.61(295)	11.61(295)	12.56(319)	14.57(370)	14.57(370)	14.57(370)	14.57(370)
Width (W)	in (mm)	31.30(795)	31.30(795)	31.30(795)	31.30(795)	37.99(965)	44.88(1140)	44.88(1140)	44.88(1140)	44.88(1140)
Depth (D)	in (mm)	8.86(225)	8.86(225)	8.86(225)	8.86(225)	9.41(239)	10.83(275)	10.83(275)	10.83(275)	10.83(275)
Weight -Net	lbs. (kg)	23.15(10.5)	23.37(10.6)	23.37(10.6)	23.37(10.6)	27.12(12.3)	43.65(19.8)	43.21(19.6)	43.21(19.6)	43.21(19.6)
Packaging										
Height	in (mm)	12.01(305)	12.01(305)	12.01(305)	12.01(305)	12.80(325)	13.98(355)	13.98(355)	13.98(355)	13.98(355)
Width	in (mm)	34.25(870)	34.25(870)	34.25(870)	34.25(870)	41.14(1045)	48.43(1230)	48.43(1230)	48.43(1230)	48.43(1230)
Depth	in (mm)	14.57(370)	14.57(370)	14.57(370)	14.57(370)	15.75(400)	17.91(455)	17.91(455)	17.91(455)	17.91(455)
Weight-Gross	lbs. (kg)	29.54(13.4)	29.98(13.6)	29.98(13.6)	29.98(13.6)	35.71(16.2)	55.56(25.2)	54.67(24.8)	54.67(24.8)	54.67(24.8)
Carton Material	--	Double corrugated								
Material Thickness	in (mm)	0.295(7.5)	0.295(7.5)	0.295(7.5)	0.295(7.5)	0.295(7.5)	0.295(7.5)	0.295(7.5)	0.295(7.5)	0.295(7.5)

CLEARANCES

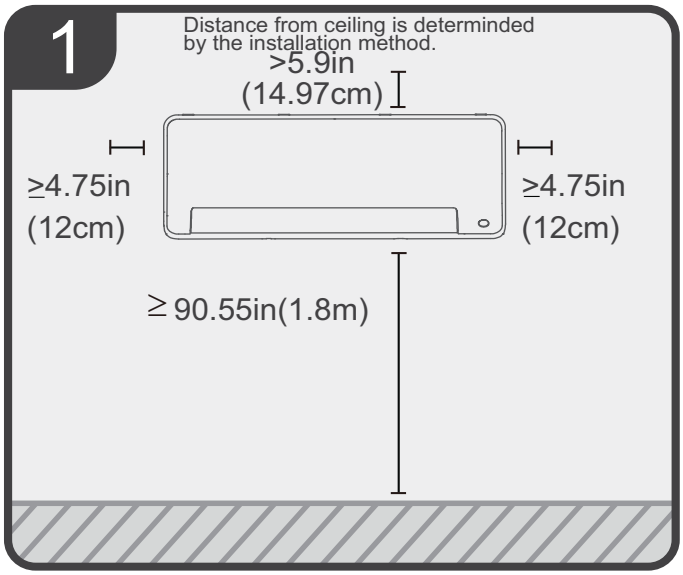

Fig. 3 – Indoor Unit Clearances

NOTE: The top clearance recommended for proper return airflow is 5.9in (15cm). Reduction of this clearance may decrease unit performance. This may be reduced to 2.0in (80mm) as long as the right and left clearances are achieved.

SPECIFICATIONS

Table 4 – Fan and Motor Specifications

Indoor Unit Model			D5MAHAQ 06XA3	D5MAHAQ 09XA3	D5MAHAQ 12XA1	D5MAHAQ 12XA3	D5MAHAQ 18XA3	D5MAHAQ 24XA3	D5MAHAQ 30XA3	D5MAHAQ 33XA3	D5MAHAQ 36XA3
Power supply V;Ph;Hz			208/230V;1Ph;60HZ		115V;1Ph; 60HZ	208/230V;1Ph;60HZ					
INDOOR FAN SPECIFICATIONS	Material	-	Acrylontrile Styrene +30%G								
	Type	-	GL-98*638-IN				GL-98*758-IN	GL-121*883-IN			
	Diameter	inch	3.9	3.9	3.9	3.9	3.9	4.8	4.8	4.8	4.8
		mm	98	98	98	98	98	121	121	121	121
	Height	inch	25.1	25.1	25.1	25.1	29.8	34.8	34.8	34.8	34.8
		mm	638	638	638	638	758	883	883	883	883
INDOOR MOTOR SPECIFICATIONS	Model	-	ZKFP-20-8-6-7		ZKFP-20-8 -113	ZKFP-20-8-6 -7	ZKFP-30-8-3 -10	ZKFP-58-8-1-10		ZKFP-58-8-20L	ZKFP-58-8-1 -10
	Type	-	DC								
	Input	W	50	50	35	50	36	58	58	86.2	58
	Max. input	W	70	70	65.8	70	70	102	102	112.5	102
	Output	W	37.5	37.5	26	37.5	27	43.5	43.5	58	43.5
	FLA	A	0.6	0.6	0.6	0.6	0.81	1.32	0.65	1.63	0.65
	Rated HP	HP	0.05	0.05	0.03	0.05	0.04	0.06	0.06	0.08	0.06
	Range of current	Amps	0.067~0.24	0.067~0.24	0.043~0.467	0.067~0.24	0.11~0.275	0.27~0.96	0.27~0.96	0.385~0.97	0.27~0.96
	Rated current	Amps	0.16	0.16	0.257	0.16	0.11	0.780	0.780	0.740	0.780
	Speed	rev/min	1100/850/700		1200/900/700	1100/850/700	1190/994/896	1000/850/630	1050/880/630	1300/1070/960	1050/880/630
	Rated RPM	rev/min	1100	1100	1200	1100	1190	1000	1050	1300	1050
	Insulation class	-	E								
	Safe class	-	IPX0	IPX0	IP20	IPX0	IPX4	IP20	IP20	IP20	IP20

Manufacturer reserves the right to change, at any time, specifications and designs without notice and without obligations.

Table 5 – Indoor Refrigerant Coil Specifications

Indoor Unit Model		D5MAHAQ 06XA3	D5MAHAQ 09XA3	D5MAHAQ 12XA1	D5MAHAQ 12XA3	D5MAHAQ 18XA3	D5MAHAQ 24XA3	D5MAHAQ 30XA3	D5MAHAQ 33XA3	D5MAHAQ 36XA3
Power supply	**V;Ph;Hz**	**208/230V;1Ph;60HZ**		**115V;1Ph; 60HZ**	**208/230V;1Ph;60HZ**					
Number of rows	Rows	2	2	2	2	2	3	3	3	3
Tube outside dia.	inch	0.276								
	mm	Φ7								
Nominal Tube Wall	Inch (mm)	0.00945 (0.24)								
Tube Enhancement	(Yes/No)	Yes								
Tube Material		Copper								
Tube pitch(a)x row pitch(b)	inch	0.83x0.53								
	mm	21x13.37								
Fin Spacing	FPI	20								
	mm	1.3								
Fin type		Louvered								
Fin Material		Gold hydrophilic aluminum								
Coil length x height x width	inch	25x3.31x1.05+25x4.96x1.05+25x4.13x1.05	25x3.31x1.05+25x4.96x1.05+25x4.13x1.05	25x3.31x1.05+25x4.96x1.05+25x4.13x1.05	25x3.31x1.05+25x4.96x1.05+25x4.13x1.05	29.92x3.31x1.05+29.92x4.96x1.05+29.92x4.96x1.05	34.84x4.96x1.58+34.84x4.96x1.58+34.84x4.96x1.58	34.84x4.96x1.58+34.84x4.96x1.58+34.84x4.96x1.58	34.84x4.96x1.58+34.84x4.96x1.58+34.84x4.96x1.58	34.84x4.96x1.58+34.84x4.96x1.58+34.84x4.96x1.58
	mm	635x84x26.74+635x126x26.74+635x105x26.74	635x84x26.74+635x126x26.74+635x105x26.74	635x84x26.74+635x126x26.74+635x105x26.74	635x84x26.74+635x126x26.74+635x105x26.74	760x84x26.74+760x126x26.74+760x126xx26.74	885x126x40.11+885x126x40.11+885x126x40.11	885x126x40.11+885x126x40.11+885x126x40.11	885x126x40.11+885x126x40.11+885x126x40.11	885x126x40.11+885x126x40.11+885x126x40.11
Face area	ft2	2.15	2.15	2.15	2.15	2.75	3.6	3.6	3.6	3.6
Number of circuits	#	3	3	3	3	4	7	7	7	7

Table 6 – Environmental Specifications

Indoor Unit Model			D5MAHA Q06XA3	D5MAHA Q09XA3	D5MAHA Q12XA1	D5MAHA Q12XA3	D5MAHA Q18XA3	D5MAHA Q24XA3	D5MAHA Q30XA3	D5MAHA Q33XA3	D5MAHA Q36XA3
Non-operating environment Storage	**Temperature range (DB)**	°F	-50 - 140	-50 - 140	-50 - 140	-50 - 140	-50 - 140	-50 - 140	-50 - 140	-50 - 140	-50 - 140
		(°C)	(-45 - 60)	(-45 - 60)	(-45 - 60)	(-45 - 60)	(-45 - 60)	(-45 - 60)	(-45 - 60)	(-45 - 60)	(-45 - 60)
Operation Humidity		%	0-80 %	0-80 %	0-80 %	0-80 %	0-80 %	0-80 %	0-80 %	0-80 %	0-80 %
Ambient Humidity		%	0-80 %	0-80 %	0-80 %	0-80 %	0-80 %	0-80 %	0-80 %	0-80 %	0-80 %

* Performance may vary based on the Outdoor unit matched to. See compatible Outdoor Units pages for Performance Data

Manufacturer reserves the right to change, at any time, specifications and designs without notice and without obligations.

COMPATIBILITY TABLE

Table 7 – Multi-Zone Heat Pump

		37MGRAQ 18CA3	—	37MGRAQ 24DA3	—	37MGRAQ 30EA3 37MGRAQ 36EA3	—	37MGRAQ 48FA3	37MGRAQ 55FA3
		—	37MGHAQ 18CA3	—	37MGHAQ 24DA3	—	37MGHAQ 30EA3 37MGHAQ 36EA3	37MGHAQ 48FA3	37MGHAQ 55FA3
High Wall Performance	D5MAHAQ06XA3		●	●	●	●	●	●	●
	D5MAHAQ09XA3	●	●	●	●	●	●	●	●
	D5MAHAQ12XA3	●	●	●	●	●	●	●	●
	D5MAHAQ18XA3	●	●	●	●	●	●	●	●
	D5MAHAQ24XA3		●	●	●	●	●	●	●
	D5MAHAQ30XA3				●	●	●	●	●
	D5MAHAQ33XA3						●	●	●
	D5MAHAQ36XA3						●	●	●

Table 8 – Single-Zone Heat Pump

		—	37MAHAQ 06AA3	37MAHAQ 09AA3	37MAHAQ 12AA3	37MAHAQ 18AA3	37MAHAQ 24AA3	—	37MAHAQ 33AA3	—
		37MARAQ 12AA1	—	37MARAQ 09AA3	37MARAQ 12AA3	37MARAQ 18AA3	37MARAQ 24AA3	37MARAQ 30AA3	—	37MARAQ 36AA3
High Wall Performance	D5MAHAQ12XA1	●								
	D5MAHAQ06XA3		●							
	D5MAHAQ09XA3			●						
	D5MAHAQ12XA3				●					
	D5MAHAQ18XA3					●				
	D5MAHAQ24XA3						●			
	D5MAHAQ30XA3							●		
	D5MAHAQ33XA3								●	
	D5MAHAQ36XA3									●

APPLICATION DATA

Unit Selections

Select equipment that either matches or is supports slightly more than the anticipated peak load. This provides better humidity control, fewer unit cycles, and less part-load operation.

For units used in spaces with high sensible loads, base equipment selection on unit sensible load, not on total anticipated load. Adjust for anticipated room wet bulb temperature to avoid undersizing the equipment.

Unit Mounting (Indoor)

Refer to the unit's installation instructions for further details.

Unit leveling - For reliable operation, units should be level in all planes.

Clearance - Provide adequate clearance for airflow (Fig. 3).

Unit location - Select a location which provides the best air circulation for the room. These units should be positioned as high as possible on the wall for the best air circulation. The unit return and discharge should not be obstructed by furniture, curtains, or anything which may cause unit short cycling or air recirculation.

Place the unit in the middle of the selected wall (if possible). Use an outside wall, if available, to make piping easier, and place the unit so it faces the normal location of room occupants.

Unit Mounting (Outdoor)

Refer to the unit's installation instructions for further details. Do not install the indoor or outdoor units in a location with special environmental conditions. For those applications, contact your Carrier representative.

Mounting Template

Refer to the unit's installation instructions for further details. The fan coil units are furnished with mounting template to mark the location of the wiring, and the refrigeration line hole locations.

Support

Adequate support must be provided to support the weight of all the fan coils. Refer to Table 3 for fan coil weights, and the Installation Manual for the mounting bracket locations.

Drain Connections

Install drains to meet the local plumbing codes. If adequate gravity drainage cannot be provided, the unit should be equipped with an accessory condensate pump. See the physical dimension tables for the drain sizes.

NOTE: High wall fan coil units have internal condensate traps. A trap is not required.

Drain connections may be routed through alternate locations on most fan coils (Fig. 4).

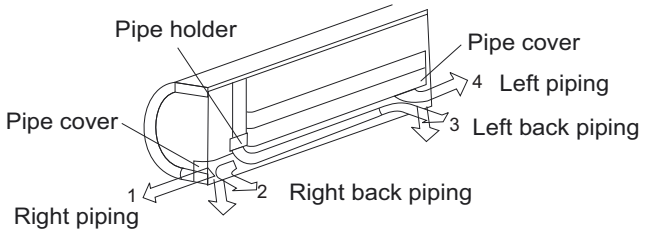

Fig. 4 – Piping Locations

WIRING

All wires must be sized per NEC (National Electrical Code) or CEC (Canadian Electrical Code) and local codes. Use Electrical Data table MCA (minimum circuit amps) and MOCP (maximum over current protection) to correctly size the wires and the disconnect fuse or breakers respectively.

Per the caution note, only stranded copper conductors with a 600 volt insulation rating wire must be used.

Recommended Connection Method for Power and Communication Wiring:

The main power is supplied to the outdoor unit. The field supplied 14/3 stranded wire with ground with a 600 volt insulation rating, power/communication wiring from the outdoor unit to indoor unit consists of four (4) wires and provides the power for the indoor unit. Two wires are line voltage AC power, one is communication wiring (S) and the other is a ground wire. Wiring between indoor and outdoor unit is polarity sensitive. The use of BX wire is NOT recommended.

If installed in a high Electromagnetic field (EMF) area and communication issues exists, a 14/2 stranded shielded wire can be used to replace L2/N and (S) between outdoor unit and indoor unit landing the shield onto ground in the outdoor unit only.

EQUIPMENT DAMAGE HAZARD

Failure to follow this caution may result in equipment damage or improper operation.

Wires should be sized based on NEC and local codes.

EQUIPMENT DAMAGE HAZARD

Failure to follow this caution may result in equipment damage or improper operation.

Be sure to comply with local codes while running wire from the indoor unit to the outdoor unit.

Every wire must be connected firmly. Loose wiring may cause the terminal to overheat or result in unit malfunction. A fire hazard may also exist. Ensure all wiring is tightly connected.

No wire should touch the refrigerant tubing, compressor or any moving parts.

Disconnecting means must be provided and shall be located within sight and readily accessible from the air conditioner.

Control System

The indoor unit is equipped with a microprocessor control to perform two functions:

1. Provide safety for the system
2. Control the system and provide optimum levels of comfort and efficiency.

The main microprocessor is located on the control board of the fan coil unit (outdoor units also have a microprocessor) with thermistors located in the fan coil air inlet and on the indoor coil. Heat pump units have a

thermistor on the outdoor coil. These thermistors monitor the system operation to maintain the unit within acceptable parameters and controls the operating mode.

Wireless Remote Controller

Fig. 5 – Wireless Remote Controller

24V Interface (Optional)

Allows the Ductless System to be controlled using a Third Party Thermostat.

Wi-Fi Kit for Smart Phone Control (Optional)

P/N KSAIF0701AAA

Allows the Ductless System to be controlled using a connected smart phone application.

AIRFLOW DATA

SYSTEM SIZE		12K (115 V)	6K (208/230 V)	9K (208/230 V)	12K (208/230 V)	18K (208/230 V)	24K (208/230 V)	30K (208/230 V)	33K (208/230 V)	36K (208/230 V)
Indoor (CFM)	Turbo	400.20	382.6	441.4	441.4	635.7	812.3	882.9	865.2	882.9
	High	323.70	323.7	323.7	323.7	500.3	618.0	635.7	735.8	635.7
	Medium	282.50	229.6	229.6	229.6	359.0	412.0	506.2	600.4	506.2
	Low	235.40	176.6	176.6	176.6	294.3	317.8	382.6	423.8	382.6

AIR THROW DATA

HIGH WALL UNIT CAPACITY	MAX. APPROXIMATE AIR THROW FT. (M)
12K (115)	23.62 (7.2)
6K (230)	23.62 (7.2)
9K (230)	23.62 (7.2)
12K (230)	23.62 (7.2)
18K (230)	26.57 (8.1)
24K (230)	30.1 (9.18)
30K (230)	30.1 (9.18)
33K (230)	30.1 (9.18)
36K (230)	30.1 (9.18)

AIR MOISTURE

SIZE		12	6	9	12	18	24	30	33	36
Voltage, Phase, Cycle	V/Ph/Hz	115-1-60	208/230-1-60							
Dehumidifying Volume	Liter/hr	1.10	0.30	0.30	1.2	2.20	2.70	4.0	4.2	4.6

* The dehumidifying volumes for the 6K unit will be available in a future release.

SOUND DATA

Model Number		D5MAHAQ 06XA3	D5MAHAQ 09XA3	D5MAHAQ 12XA1	D5MAHAQ 12XA3	D5MAHAQ 18XA3	D5MAHAQ 24XA3	D5MAHAQ 30XA3	D5MAHAQ 33XA3	D5MAHAQ 36XA3
Power supply	V-Ph-Hz	208/230V-1Ph-60HZ		115V-1Ph -60HZ	208/230V-1Ph-60HZ					
Indoor Sound Pressure Level (Hi/Med/Lo/Silent)	dB(A)	36.5 /32.5 /22.0 /19.5	38 /33 /20.5 /19.5	36.5 /32.5 /21 /17.5	36.5 /32.5 /22 /19.5	45.0 /38.0 /31.5 /19.5	43.5 /38.5 /27 /16	45.5 /40 /30.5 /19.5	53.0 /46.5 /35.5 /29.5	49 /43.5 /34.5 /31.5

CFM DATA

Model Number		D5MAHAQ 06XA3	D5MAHAQ 09XA3	D5MAHAQ 12XA1	D5MAHAQ 12XA3	D5MAHAQ 18XA3	D5MAHAQ 24XA3	D5MAHAQ 30XA3	D5MAHAQ 33XA3	D5MAHAQ 36XA3
Power supply	V;Ph;Hz	208/230V-1Ph-60HZ		115V-1Ph -60HZ	208/230V-1Ph-60HZ					
Indoor air flow data (Hi/Med/Lo)	CFM	335.49/229.55/176.57		353.4 /282.7 /235.6	335.49 /229.55 /176.57	500.29 /359.03 /294.29	611.18 /414.12 /318.82	646.47 /505.29 /382.35	770.59 /600.00 /423.53	635.29 /505.88 /382.35

WIRING DIAGRAM

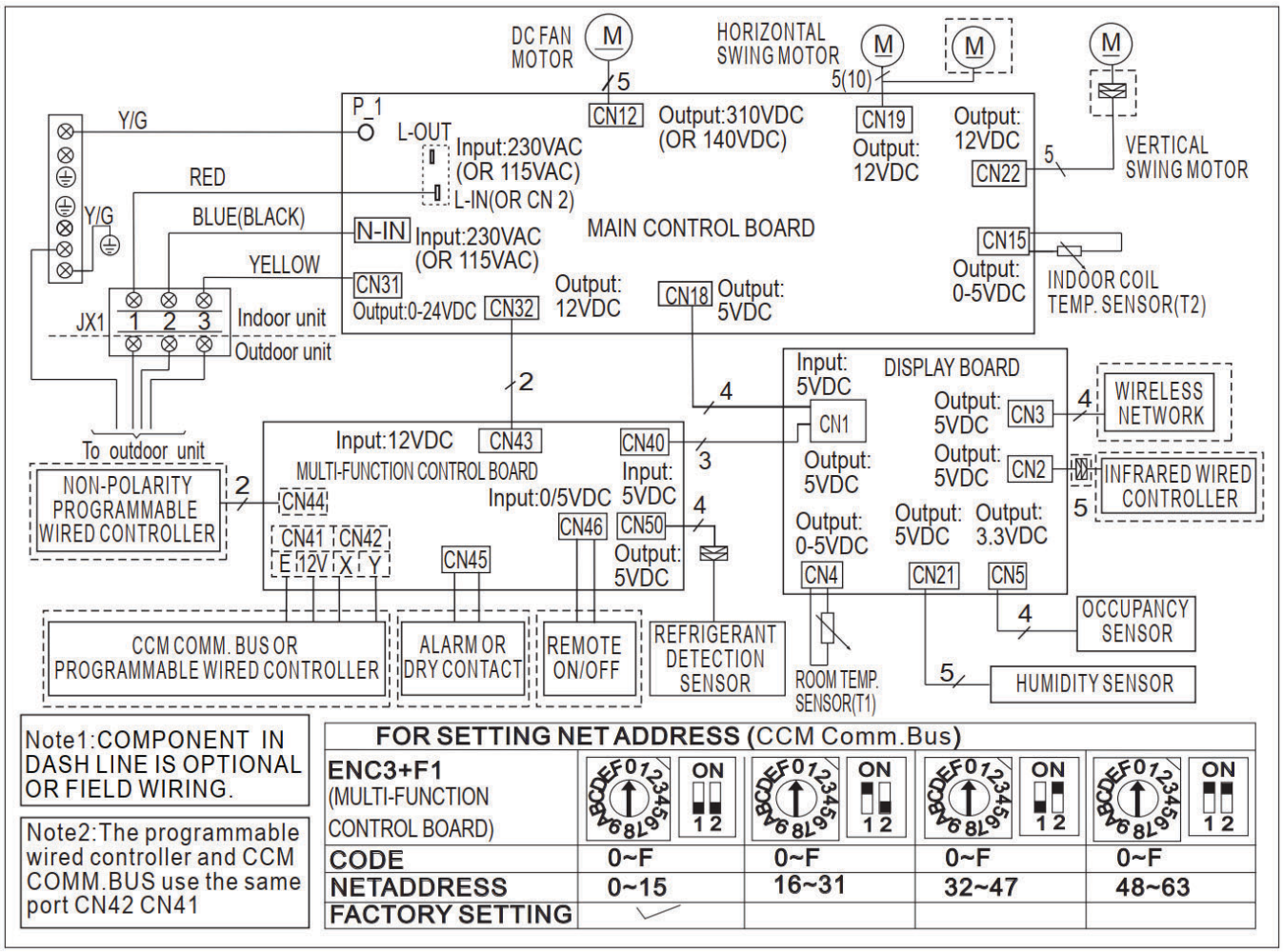

Fig. 6 – Wiring Diagram Sizes 6K - 36K (115V and 208/230V)

GUIDE SPECIFICATIONS

INDOOR WALL-MOUNTED DUCTLESS UNITS

Size Range: 1/2 to 3 Ton Nominal Cooling and Heating Capacity

Model Number: **D5MAHAQ**

Part 1 - GENERAL

1.01 System Description

Indoor, wall-mounted, direct-expansion fan coils are matched with the heat pump outdoor unit.

1.02 Agency Listings

Unit are rated per AHRI Standards 210/240 and listed in the AHRI directory as a matched system.

1.03 Delivery, Storage, And Handling

Store and handle the unit per the unit manufacturer's recommendations.

1.04 Warranty (For Inclusion By Specifying Engineer)

Part 2 - PRODUCTS

2.01 Equipment

A. General: Indoor, direct-expansion, wall-mounted fan coil

Unit is complete with a cooling/heating coil, fan, fan motor, piping connectors, electrical controls, microprocessor control system, and integral temperature sensing. Unit is furnished with an integral wall mounting bracket and mounting hardware.

B. **Unit Cabinet:**

Cabinet discharge and inlet grilles are attractively styled, high-impact polystyrene. Cabinet is fully insulated for improved thermal and acoustic performance.

C. **Fans**:

1. Fan is the tangential direct-drive blower type with air intake at the top of the unit and discharge at the bottom front. An automatic, motor-driven vertical air sweep is provided as standard equipment.
2. The air sweep operation is user selectable. The vertical sweep may be adjusted (using the remote control). The horizontal air direction may be set manually.

D. **Coil**:

The coil is a copper tube with aluminum fins and galvanized steel tube sheets. The fins are bonded to the tubes by mechanical expansion and anti-corrosive fin coating. A drip pan under the coil has a drain connection for the hose attachment to remove condensate. The condensate pan has an internal trap.

E. **Motors**:

Motors are open drip-proof, with a permanently lubricated ball bearing. The fan motors is 4-speed.

F. **Controls**:

Controls consist of a microprocessor-based control system which controls space temperature, determine optimum fan speed, and run self diagnostics. The temperature control range is from 62°F to 86°F (17°C to 30°C) in increments of 1°F or 1°C, and have 46°F Heating Mode (Heating Setback). The wireless remote controller has the ability to act as the temperature sensing location for room comfort.

The unit has the following functions as a minimum:

1. An automatic restart after a power failure at the same operating conditions as at the failure.
2. A timer function to provide a minimum 24-hour timer cycle for system Auto Start/Stop.
3. Temperature-sensing controls sense return air temperature.
4. Indoor coil freeze protection.
5. Wireless infrared remote control to enter set points and operating conditions.
6. Automatic air sweep control to provide on or off activation of air sweep louvers.
7. Dehumidification mode provides increased latent removal capability by modulating the system operation and the set point temperature.
8. Fan-only operation to provide room air circulation when no cooling is required.
9. Diagnostics provide continuous checks of unit operation and warn of possible malfunctions. Error messages appear on the unit.
10. Fan speed control is user-selectable: turbo, high, medium, low, or microprocessor controlled automatic operation during all operating modes.
11. Automatic heating-to-cooling changeover in the heat pump mode. Control includes deadband to prevent rapid mode cycling between heating and cooling.
12. Indoor coil high temperature protection detects excessive indoor discharge temperature when the unit is in the heat pump mode.

G. Filters:

Unit have a filter track with factory-supplied cleanable filters.

H. Electrical Requirements:

Indoor fan motor to operate on 115V on model size 12 and on 208-230V on model sizes 06-36, as specified. Power is supplied by the outdoor unit..

I. Operating Characteristics:

The **D5MAHA** system has a minimum SEER2 (Seasonal Energy Efficiency Ratio) and HSPF at AHRI conditions, as listed on the specifications table.

J. Refrigerant Lines:

All units have refrigerant lines that can be oriented to connect from the left, right or back of unit. Both refrigerant lines need to be insulated.

K. Special Features (Field Installed):

Condensate Pump:

The condensate pump removes condensate from the drain pan when gravity drainage cannot be used. The pump is designed for quiet operation. The pump consists of two parts: an internal reservoir/sensor assembly, and a remote sound-shielded pump assembly. A liquid level sensor in the reservoir stops the cooling operation if the liquid level in the reservoir is unacceptable.

L. Leak Mitigation

The unit is equipped with a refrigerant leak detection sensor.

© 2025 Carrier. All rights reserved.

Manufacturer reserves the right to change, at any time, specifications and designs without notice and without obligations.