# wiring diagrams

208/230-1-60

AIR CONDITIONER UNIT

**550A 024-060 Series A**

Cancels: WD 550A.24.1 WD 550A.24.2
1-98

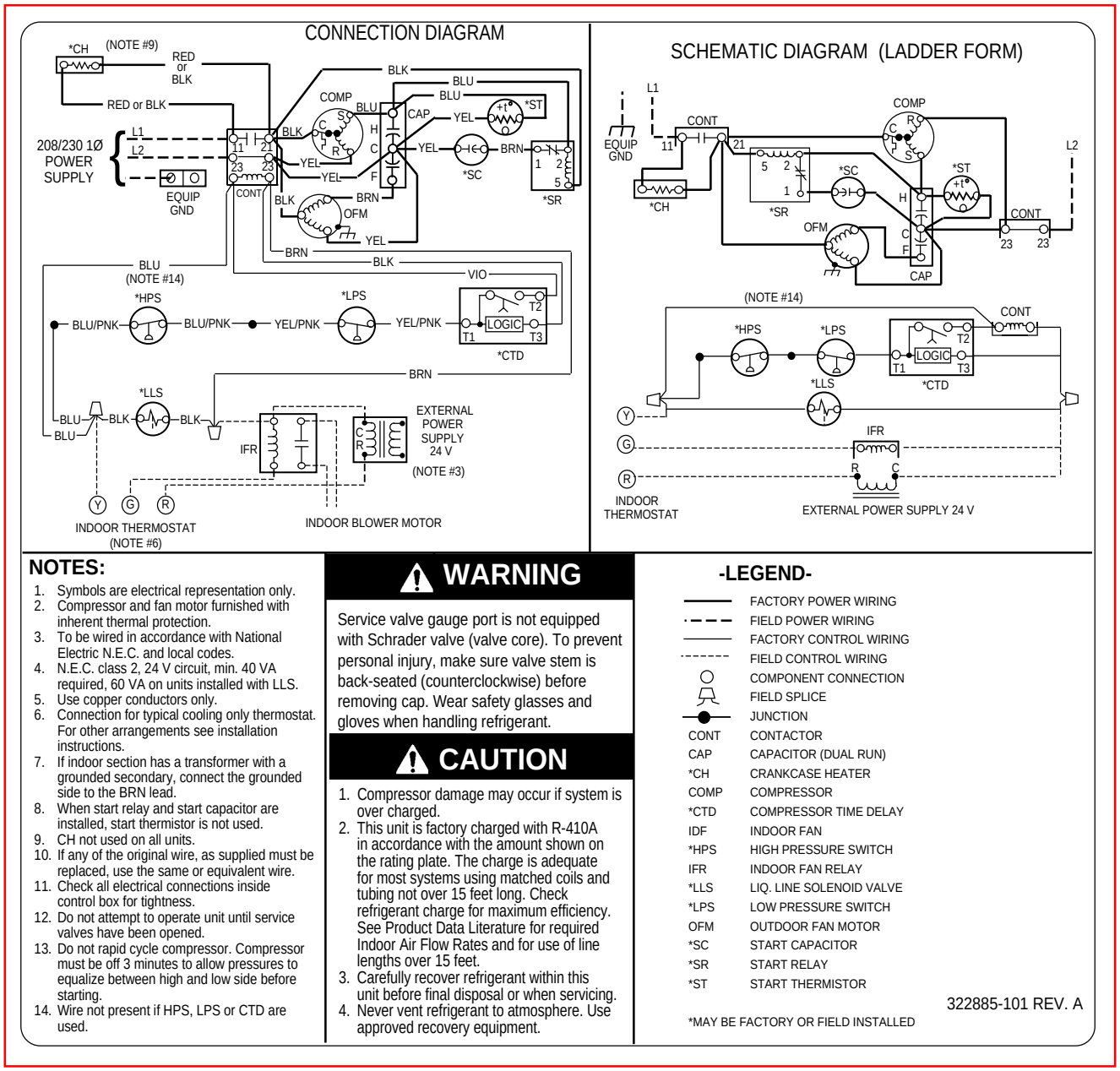


## NOTES:

1. Symbols are electrical representation only.
2. Compressor and fan motor furnished with inherent thermal protection.
3. To be wired in accordance with National Electric N.E.C. and local codes.
4. N.E.C. class 2, 24 V circuit, min. 40 VA required, 60 VA on units installed with LLS.
5. Use copper conductors only.
6. Connection for typical cooling only thermostat. For other arrangements see installation instructions.
7. If indoor section has a transformer with a grounded secondary, connect the grounded side to the BRN lead.
8. When start relay and start capacitor are installed, start thermistor is not used.
9. CH not used on all units.
10. If any of the original wire, as supplied must be replaced, use the same or equivalent wire.
11. Check all electrical connections inside control box for tightness.
12. Do not attempt to operate unit until service valves have been opened.
13. Do not rapid cycle compressor. Compressor must be off 3 minutes to allow pressures to equalize between high and low side before starting.
14. Wire not present if HPS, LPS or CTD are used.

## ⚠ WARNING

Service valve gauge port is not equipped with Schrader valve (valve core). To prevent personal injury, make sure valve stem is back-seated (counterclockwise) before removing cap. Wear safety glasses and gloves when handling refrigerant.

## ⚠ CAUTION

1. Compressor damage may occur if system is over charged.
2. This unit is factory charged with R-410A in accordance with the amount shown on the rating plate. The charge is adequate for most systems using matched coils and tubing not over 15 feet long. Check refrigerant charge for maximum efficiency. See Product Data Literature for required Indoor Air Flow Rates and for use of line lengths over 15 feet.
3. Carefully recover refrigerant within this unit before final disposal or when servicing.
4. Never vent refrigerant to atmosphere. Use approved recovery equipment.

## -LEGEND-

| | |
|---|---|
| ——— | FACTORY POWER WIRING |
| - - - | FIELD POWER WIRING |
| ——— | FACTORY CONTROL WIRING |
| - - - | FIELD CONTROL WIRING |
| ○ | COMPONENT CONNECTION |
| | FIELD SPLICE |
| ●— | JUNCTION |
| CONT | CONTACTOR |
| CAP | CAPACITOR (DUAL RUN) |
| *CH | CRANKCASE HEATER |
| COMP | COMPRESSOR |
| *CTD | COMPRESSOR TIME DELAY |
| IDF | INDOOR FAN |
| *HPS | HIGH PRESSURE SWITCH |
| IFR | INDOOR FAN RELAY |
| *LLS | LIQ. LINE SOLENOID VALVE |
| *LPS | LOW PRESSURE SWITCH |
| OFM | OUTDOOR FAN MOTOR |
| *SC | START CAPACITOR |
| *SR | START RELAY |
| *ST | START THERMISTOR |

*MAY BE FACTORY OR FIELD INSTALLED

A96032

**Fig. 1—550A024-048 208/230v, 1 Phase, 60 Hertz**

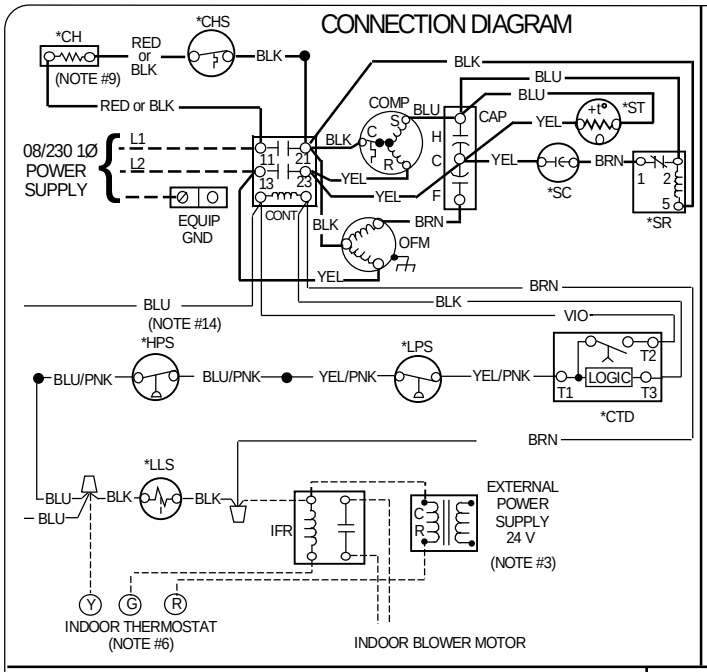


## -LEGEND-

| | |
|---|---|
| | FACTORY POWER WIRING |
| | FIELD POWER WIRING |
| | FACTORY CONTROL WIRING |
| | FIELD CONTROL WIRING |
| ○ | COMPONENT CONNECTION |
| | FIELD SPLICE |
| ● | JUNCTION |
| CONT | CONTACTOR |
| CAP | CAPACITOR (DUAL RUN) |
| *CH | CRANKCASE HEATER |
| *CHS | CRANKCASE HEATER SWITCH |
| COMP | COMPRESSOR |
| *CTD | COMPRESSOR TIME DELAY |
| IDF | INDOOR FAN |
| *HPS | HIGH PRESSURE SWITCH |
| IFR | INDOOR FAN RELAY |
| *LLS | LIQ. LINE SOLENOID VALVE |
| *LPS | LOW PRESSURE SWITCH |
| OFM | OUTDOOR FAN MOTOR |
| *SC | START CAPACITOR |
| *SR | START RELAY |
| *ST | START THERMISTOR |

*MAY BE FACTORY OR FIELD INSTALLED

## ⚠ WARNING

Service valve gauge port is not equipped with Schrader valve (valve core). To prevent personal injury, make sure valve stem is back-seated (counterclockwise) before removing cap. Wear safety glasses and gloves when handling refrigerant.

## ⚠ CAUTION

1. Compressor damage may occur if system is over charged.
2. This unit is factory charged with R-410A in accordance with the amount shown on the rating plate. The charge is adequate for most systems using matched coils and tubing not over 15 feet long. Check refrigerant charge for maximum efficiency. See Product Data Literature for required Indoor Air Flow Rates and for use of line lengths over 15 feet.
3. Carefully recover refrigerant within this unit before final disposal or when servicing.
4. Never vent refrigerant to atmosphere. Use approved recovery equipment.

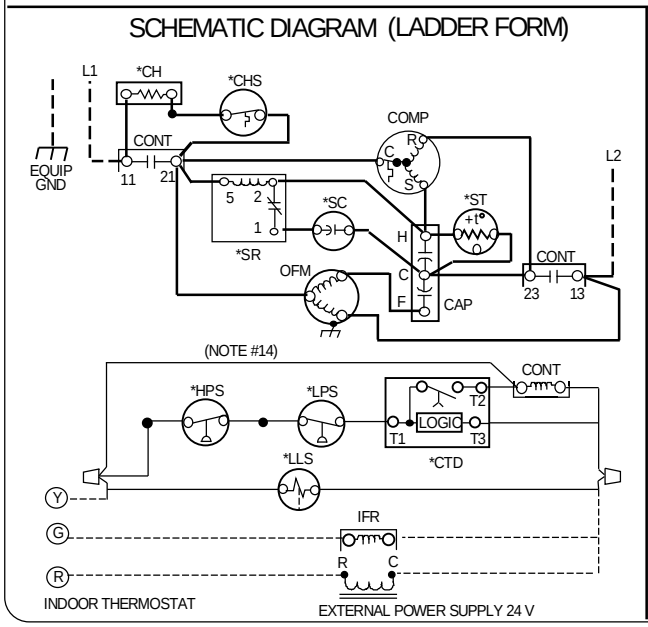


## NOTES:

1. Symbols are electrical representation only.
2. Compressor and fan motor furnished with inherent thermal protection.
3. To be wired in accordance with National Electric N.E.C. and local codes.
4. N.E.C. class 2, 24 V circuit, min. 40 VA required, 60 VA on units installed with LLS.
5. Use copper conductors only.
6. Connection for typical cooling only thermostat. For other arrangements see installation instructions.
7. If indoor section has a transformer with a grounded secondary, connect the grounded side to the BRN lead.
8. When start relay and start capacitor are installed, start thermistor is not used.
9. CH not used on all units.
10. If any of the original wire, as supplied must be replaced, use the same or equivalent wire.
11. Check all electrical connections inside control box for tightness.
12. Do not attempt to operate unit until service valves have been opened.
13. Do not rapid cycle compressor. Compressor must be off 3 minutes to allow pressures to equalize between high and low side before starting.
14. Wire not present if HPS, LPS or CTD are used.
15. Use conductors suitable for at least 75˚C (167˚F).

324465-101 REV. A

A98019E

**Fig. 2—550A060 208/230v, 1 Phase, 60 Hertz**