# 24SCB4B
# Export Only
# Comfort™ Series Single-Stage Air Conditioner with Puron® Refrigerant
# 1-1/2 To 5 Tons

Carrier®
Turn to the experts

# Product Data

This unit has designed utilizing Carrier's Puron refrigerant. The environmentally sound refrigerant allows you to make a responsible decision in the protection of the earth's ozone layer.

**NOTE:** Ratings contained in this document are subject to change at any time. Always refer to the AHRI directory (www.ahridirectory.org) for the most up-to-date ratings information.

## Industry leading Features / Benefits

### Efficiency

- 13.4 - 16.0 SEER2 (13.5 - 16.5 SEER) / 10.5 - 13.0 EER2 (11.0 - 14.5 EER)
- Microtube Technology refrigeration system
- Indoor air quality accessories available

### Reliability

- Puron refrigerant - environmentally sound, won't deplete the ozone layer and low lifetime service cost.
- Scroll compressor
- Internal pressure relief valve
- Internal thermal overload
- Filter drier

### Durability

WeatherArmor™ Protection Package:

- Solid, durable sheet metal construction
- Dense wire coil guard

### Applications

- Long–line – up to 250 feet (76.20 m) total equivalent length, up to 200 feet (60.96 m) condenser above evaporator, or up to 80 ft. (24.4 m) evaporator above condenser (See Long Line Guide for more information.)
- Low ambient cooling (down to 0°F / -18°C ) with approved low ambient accessory kits.

## STANDARD FEATURES

| Features | 18 | 24 | 30 | 36 | 42 | 48 | 60 |
|---|---|---|---|---|---|---|---|
| Puron Refrigerant | X | X | X | X | X | X | X |
| SEER2 (Range depending on indoor combination) | 13.4 - 15.5 | 13.4 - 15.5 | 13.4 - 15.5 | 13.4 - 15.2 | 13.4 - 15.5 | 13.4 - 15.2 | 13.4 - 14.5 |
| Scroll Compressor | X | X | X | X | X | X | X |
| Field Installed Filter Drier | X | X | X | X | X | X | X |
| Front Seating Service Valves | X | X | X | X | X | X | X |
| Internal Pressure Relief Valve | X | X | X | X | X | X | X |
| Internal Thermal Overload | X | X | X | X | X | X | X |
| Long Line Capability | X | X | X | X | X | X | X |
| Low Ambient Capability with Kit | X | X | X | X | X | X | X |

## Model Number Nomenclature

| 1 | 2 | 3 | 4 | 5 | 6 | 7 | 8 | 9 | 10 | 11 | 12 |
|---|---|---|---|---|---|---|---|---|---|---|---|
| N | N | A | A | A/N | N | N | N | A/N | A/N | A/N | N |
| **2** | **4** | **S** | **C** | **B** | **4** | **1** | **8** | **N** | **0** | **0** | **3** |
| Product Series | | Design Type | Tier | Major Series | SEER2 | Cooling Capacity | | Region | Feature | Special Feature | Voltage |
| **24** = R-410A AC | | S = Single Stage AC | **C** = Comfort Series | B=Export | 4 = 13.4 SEER2 | 1,000 Btuh (nominal) | | N = Standard North AC | 0=Standard | 0=Standard | 3=208/230-1 |

## CATALOG ORDERING NUMBERS

| Size | Model Number |
|---|---|
| **18** | 24SCB418N003 |
| **24** | 24SCB424N003 |
| **30** | 24SCB430N003 |
| **36** | 24SCB436N003 |
| **42** | 24SCB442N003 |
| **48** | 24SCB448N003 |
| **60** | 24SCB460N003 |

Puron

AHRI CERTIFIED™ www.ahridirectory.org

Use of the AHRI Certified TM Mark indicates a manufacturer's participation in the program For verification of certification for individual products, go to www.ahridirectory.org.

Certified System

Quality ISO 9001

SAI GLOBAL

C UL US

## Physical Data

| UNIT SIZE | 18 | 24 | 30 | 36 | 42 | 48 | 60 |
|---|---|---|---|---|---|---|---|
| **Compressor Type** | Scroll | | | | | | |
| **REFRIGERANT** | Puron® (R-410A) | | | | | | |
| Control | TXV ( Hard Shutoff) | | | | | | |
| Factory Charge lb (kg)* | 3.50 (1.59)† | 4.00 (1.81)† | 6.00 (2.72) | 5.20 (2.36) | 7.90 (3.58) | 8.90 (4.04) | 9.10 (4.13) |
| **COND FAN** | Propeller Type, Direct Drive | | | | | | |
| Air Discharge | Vertical | | | | | | |
| Air Qty (CFM) | 1600 | 1800 | 2500 | 2750 | 4100 | 3850 | 4000 |
| Motor HP | 1/12 | 1/12 | 1/10 | 1/5 | 1/4 | 1/4 | 1/4 |
| Motor RPM | 1100 | 1100 | 1100 | 1100 | 1100 | 1100 | 1100 |
| **COND COIL** | | | | | | | |
| Face Area (Sq ft) | 8.4 | 9.8 | 17.1 | 12.9 | 23.6 | 15.0 | 19.3 |
| Fins per In. | 25 | 25 | 25 | 20 | 25 | 20 | 20 |
| Rows | 1 | 1 | 1 | 1 | 1 | 2 | 2 |
| Circuits | 3 | 5 | 4 | 5 | 7 | 6 | 9 |
| **VALVE CONNECT. (In. ID)** | | | | | | | |
| Vapor | 3/4 | 3/4 | 3/4 | 7/8 | 7/8 | 7/8 | 7/8 |
| Liquid | 3/8" | | | | | | |
| **REFRIGERANT TUBES* (In. OD)** | | | | | | | |
| Rated Vapor‡ | 3/4 | 3/4 | 3/4 | 7/8 | 7/8 | 7/8 | 1-1/8 |
| Rated Liquid Line** | 3/8" | | | | | | |

*.For 15 ft. lineset
†.To reach 15 ft. of line set, add 18 oz for the 18 size and 6 oz for the 24 size. Adjust per installation instructions. Refrigerant charge also varies with indoor unit; refer to refrigerant charge label.
‡.Units are rated with 25 ft (7.6 m) of lineset length. See Vapor Line Sizing and Cooling Capacity Loss table when using other sizes and lengths of lineset.
**.See Liquid Line Sizing For Cooling Only Systems with Puron Refrigerant tables.
**Note**: See unit Installation Instruction for proper installation.

# REFRIGERANT PIPING LENGTH LIMITATIONS

## Liquid Line Sizing and Maximum Total Equivalent Lengths for Cooling Only Systems with Puron® Refrigerant:

The maximum allowable length of a residential split system depends on the liquid line diameter and vertical separation between indoor and outdoor units.

See Table below for liquid line sizing and maximum lengths :

**Table 1 – Maximum Total Equivalent Length***
**Outdoor Unit BELOW Indoor Unit**

| Size | Liquid Line Connection | Liquid Line Diam. w/ TXV | AC with Puron Refrigerant Maximum Total Equivalent Length†: Outdoor unit BELOW Indoor Vertical Separation ft (m) | | | | | | | | |
|---|---|---|---|---|---|---|---|---|---|---|---|
| | | | 0-5 (0-1.5) | 6-10 (1.8-3.0) | 11-20 (3.4-6.1) | 21-30 (6.4-9.1) | 31-40 (9.4-12.2) | 41-50 (12.5-15.2) | 51-60 (15.5-18.3) | 61-70 (18.6-21.3) | 71-80 (21.6-24.4) |
| 18000 | 3/8 | 1/4 | 150 | 150 | 125 | 100 | 100 | 75 | -- | -- | -- |
| | | 5/16 | 250* | 250* | 250* | 250* | 250* | 250* | 250* | 225* | 150 |
| | | 3/8 | 250* | 250* | 250* | 250* | 250* | 250* | 250* | 250* | 250* |
| 24000 | 3/8 | 1/4 | 75 | 75 | 75 | 50 | 50 | -- | -- | -- | -- |
| | | 5/16 | 250* | 250* | 250* | 250* | 250* | 225* | 175 | 125 | 100 |
| | | 3/8 | 250* | 250* | 250* | 250* | 250* | 250* | 250* | 250* | 250* |
| 30000 | 3/8 | 1/4 | 30 | -- | -- | -- | -- | -- | -- | -- | -- |
| | | 5/16 | 175 | 225* | 200 | 175 | 125 | 100 | 75 | -- | -- |
| | | 3/8 | 250* | 250* | 250* | 250* | 250* | 250* | 250* | 250* | 250* |
| 36000 | 3/8 | 5/16 | 175 | 150 | 150 | 100 | 100 | 100 | 75 | -- | -- |
| | | 3/8 | 250* | 250* | 250* | 250* | 250* | 250* | 250* | 250* | 250* |
| 42000 | 3/8 | 5/16 | 125 | 100 | 100 | 75 | 75 | 50 | -- | -- | -- |
| | | 3/8 | 250* | 250* | 250* | 250* | 250* | 250* | 250* | 250* | 150 |
| 48000 | 3/8 | 3/8 | 250* | 250* | 250* | 250* | 250* | 250* | 230 | 160 | -- |
| 60000 | 3/8 | 3/8 | 250* | 250* | 250* | 225* | 190 | 150 | 110 | -- | -- |

*.Maximum actual length not to exceed 200 ft (61 m)
†.Total equivalent length accounts for losses due to elbows or fitting. See the Long Line Guideline for details.
-- = outside acceptable range

**Table 2 – Maximum* Total Equivalent Length**
**Outdoor Unit ABOVE Indoor Unit**

| Size | Liquid Line Connection | Liquid Line Diam. w/ TXV | AC with Puron Refrigerant Maximum Total Equivalent Length†: Outdoor unit ABOVE Indoor Vertical Separation ft (m) | | | | | | | |
|---|---|---|---|---|---|---|---|---|---|---|
| | | | 25 (7.6) | 26-50 (7.9-15.2) | 51-75 (15.5-22.9) | 76-100 (23.2-30.5) | 101-125 (30.8-38.1) | 126-150 (38.4-45.7) | 151-175 (46.0-53.3) | 176-200 (53.6-61.0) |
| 18000 | 3/8 | 1/4 | 175 | 250* | 250* | 250* | 250* | 250* | 250* | 250* |
| | | 5/16 | 250* | 250* | 250* | 250* | 250* | 250* | 250* | 250* |
| | | 3/8 | 250* | 250* | 250* | 250* | 250* | 250* | 250* | 250* |
| 24000 | 3/8 | 1/4 | 100 | 125 | 175 | 200 | 225* | 250* | 250* | 250* |
| | | 5/16 | 250* | 250* | 250* | 250* | 250* | 250* | 250* | 250* |
| | | 3/8 | 250* | 250* | 250* | 250* | 250* | 250* | 250* | 250* |
| 30000 | 3/8 | 1/4 | 30 | -- | -- | -- | -- | -- | -- | -- |
| | | 5/16 | 250* | 250* | 250* | 250* | 250* | 250* | 250* | 250* |
| | | 3/8 | 250* | 250* | 250* | 250* | 250* | 250* | 250* | 250* |
| 36000 | 3/8 | 5/16 | 225* | 250* | 250* | 250* | 250* | 250* | 250* | 250* |
| | | 3/8 | 250* | 250* | 250* | 250* | 250* | 250* | 250* | 250* |
| 42000 | 3/8 | 5/16 | 175 | 200 | 250* | 250* | 250* | 250* | 250* | 250* |
| | | 3/8 | 250* | 250* | 250* | 250* | 250* | 250* | 250* | 250* |
| 48000 | 3/8 | 3/8 | 250* | 250* | 250* | 250* | 250* | 250* | 250* | 250* |
| 60000 | 3/8 | 3/8 | 250* | 250* | 250* | 250* | 250* | 250* | 250* | 250* |

*.Maximum actual length not to exceed 200 ft (61 m)
†.Total equivalent length accounts for losses due to elbows or fitting. See the Long Line Guideline for details.
-- = Outside acceptable range

**Table 3 – Refrigerant Charge Adjustments**

| Liquid Line Size | Puron Charge oz/ft (g/m) |
|---|---|
| 3/8 | 0.60 (17.74)<br>(Factory charge for lineset = 9 oz / 266.16 g) |
| 5/16 | 0.40 (11.83) |
| 1/4 | 0.27 (7.98) |

Units are factory charged for 15 ft (4.6 m) of 3/8" liquid line. The factory charge for 3/8" lineset 9 oz.(266.16 g). When using other length or diameter liquid lines, charge adjustments are required per the chart above.

### Charging Formula:

[(Lineset oz/ft X total length) – (factory charge for lineset)] = charge adjustment

**Example 1**: System has 15 ft of lineset* using existing 1/4" liquid line. What charge adjustment is required?

Formula:(.27 oz/ft X 15ft) – (9 oz) = (-4.95) oz.

Net result is to remove 4.95 oz of refrigerant from the system

**Example 2**: System has 45 ft of existing 5/16" liquid line. What is the charge adjustment?

Formula:(.40 oz/ft. X 45ft) – (9 oz.) = 9 oz.

Net result is to add 9 oz of refrigerant to the system

**NOTE:** Conditions must be favorable for charging by subcooling method. Indoor temperature must be 70°F to 80°F (21°C to 27°C), and outdoor temperature must be 70°F to 100°F (21°C to 38°C). If outside these conditions, adjust charge for long linesets by weigh-in method.

* When applicable. Refer to Physical Data Table in this PD and to the Installation Instructions for more information.

## Long Line Applications

An application is considered Long Line, when the refrigerant level in the system requires the use of accessories to maintain acceptable refrigerant management for systems reliability. See Accessory Usage Guideline table for required accessories. Defining a system as long line depends on the liquid line diameter, actual length of the tubing, and vertical separation between the indoor and outdoor units.

For Air Conditioner systems, the chart below shows when an application is considered Long Line.

**Table 4 – AC with Puron® Refrigerant Long Line Description ft (m) Beyond these lengths, a TXV is required**

| Total Length | Outdoor Unit Above or Below Indoor Unit |
|---|---|
| TXV required beyond 50 ft. (15.2 m) | TXV required beyond 20 ft. (6.1 m) |

**Table 5 – AC with Puron® Refrigerant Long Line Description ft (m) (Beyond these lengths, long line accessories are required)**

| Liquid Line Size | Units On Same Level | Outdoor Below Indoor | Outdoor Above Indoor |
|---|---|---|---|
| 1/4 + TXV | No accessories needed within allowed lengths | No accessories needed within allowed lengths | 175 (53.3) |
| 5/16 + TXV | 120 (36.6) | 50 (15.2) vertical or 120 (36.6) total | 120 (36.6) |
| 3/8 + TXV | 80 (24.4) | 35 (10.7) vertical or 80 (24.4) total | 80 (24.4) |

**Note**: See Residential Piping and Long Line Guideline for details

# VAPOR LINE SIZING AND COOLING CAPACITY LOSS

Acceptable vapor line diameters provide adequate oil return to the compressor while avoiding excessive capacity loss. The suction line diameters shown in the chart below are acceptable for AC systems with **Puron®** refrigerant:

**Table 6 – Vapor Line Sizing and Cooling Capacity Losses — Puron® Refrigerant 1-Stage Air Conditioner Applications**

| Unit Nominal Size (Btuh) | Maximum Liquid Line Diameters (In. OD) | Vapor Line Diameters (In. OD) | Cooling Capacity Loss (%) Total Equivalent Line Length ft. (m) 1-Stage AC with Puron® | | | | | | | | |
|---|---|---|---|---|---|---|---|---|---|---|---|
| | | | 26-50 (7.9-15.2) | 51-80 (15.5-24.4) | 81-100 (24.7-30.5) | 101-125 (30.8-38.1) | 126-150 (38.4-45.7) | 151-175 (46.0-53.3) | 176-200 (53.6-61.0) | 201-225 (61.3-68.6) | 226-250 (68.9-76.2) |
| 18 | 3/8 | 1/2 | 1 | 2 | 3 | 5 | 6 | 7 | 8 | 9 | 11 |
| | | 5/8 | 0 | 1 | 1 | 1 | 2 | 2 | 2 | 3 | 3 |
| | | 3/4 | 0 | 0 | 0 | 0 | 1 | 1 | 1 | 1 | 1 |
| 24 | 3/8 | 5/8 | 0 | 1 | 2 | 2 | 3 | 3 | 4 | 5 | 5 |
| | | 3/4 | 0 | 0 | 1 | 1 | 1 | 1 | 1 | 2 | 2 |
| | | 7/8 | 0 | 0 | 0 | 0 | 0 | 1 | 1 | 1 | 1 |
| 30 | 3/8 | 5/8 | 1 | 2 | 3 | 3 | 4 | 5 | 6 | 7 | 8 |
| | | 3/4 | 0 | 0 | 1 | 1 | 1 | 2 | 2 | 2 | 3 |
| | | 7/8 | 0 | 0 | 0 | 0 | 1 | 1 | 1 | 1 | 1 |
| 36 | 3/8 | 5/8 | 1 | 2 | 4 | 5 | 6 | 8 | 9 | 10 | 12 |
| | | 3/4 | 0 | 1 | 1 | 2 | 2 | 3 | 3 | 4 | 4 |
| | | 7/8 | 0 | 0 | 0 | 1 | 1 | 1 | 1 | 2 | 2 |
| 42 | 3/8 | 3/4 | 0 | 1 | 2 | 2 | 3 | 4 | 4 | 5 | 6 |
| | | 7/8 | 0 | 0 | 1 | 1 | 1 | 2 | 2 | 2 | 3 |
| | | 1 1/8 | 0 | 0 | 0 | 0 | 0 | 0 | 0 | 0 | 0 |
| 48 | 3/8 | 3/4 | 0 | 1 | 2 | 3 | 4 | 5 | 5 | 6 | 7 |
| | | 7/8 | 0 | 0 | 1 | 1 | 2 | 2 | 2 | 3 | 3 |
| | | 1 1/8 | 0 | 0 | 0 | 0 | 0 | 0 | 0 | 1 | 1 |
| 60 | 3/8 | 3/4 | 1 | 2 | 4 | 5 | 6 | 7 | 9 | 10 | 11 |
| | | 7/8 | 0 | 1 | 2 | 2 | 3 | 4 | 4 | 5 | 5 |
| | | 1 1/8 | 0 | 0 | 0 | 1 | 1 | 1 | 1 | 1 | 1 |

Applications in this area may be long line and may have height restrictions. See the Residential Piping and Long Line Guideline.

# ACCESSORIES

| KIT NUMBER | KIT NAME | 18 | 24 | 30 | 36 | 42 | 48 | 60 |
|---|---|---|---|---|---|---|---|---|
| KSAFT0101AAA | FRZ THERM KIT | X | X | X | X | X | X | X |
| KAATD0101TDR | TIME DELAY KIT (90 second TDR) | X | X | X | X | X | X | X |
| KAATD0201TDR | TIME DELAY KIT (30 second TDR) | X | X | X | X | X | X | X |
| KSALA0301410 | LOW AMBIENT COOLING KIT | X | X | X | X | X | X | X |
| KSALA1001AAA | MOTORMASTER KIT | X | X | X | X | X | X | X |
| KSAHS2501AAA | HARD START KIT | X | X | X | X | X | X | X |
| KSACY0101AAA | CYCLE PROTR KIT | X | X | X | X | X | X | X |
| KSASF0201AAA | SPRT FEET KIT | X | X | X | X | X | X | X |
| KAALS0201LLS* | SOL VALVE KIT | X | X | X | X | X | X | X |
| KAAWS0101AAA | WINTER ST KIT | X | X | X | X | X | X | X |
| KAALP0401PUR | LOW PRESSURE SW KIT | X | X | X | X | X | X | X |
| KAAHI0501PUR | HIGH PRESSURE SW KIT | X | X | X | X | X | X | X |
| KAACH1701AAA | CRKC HTR KIT | X | X | X | X | | | |
| KAACH1601AAA | CRKC HTR KIT | | | | | X | X | X |
| KSATX0201PUR | TXV KIT (For use with copper coils) | X | X | X | | | | |
| KSATX0301PUR | TXV KIT (For use with copper coils) | | | | X | X | | |
| KSATX0401PUR | TXV KIT (For use with copper coils) | | | | | | X | X |
| KSBTX0201PUR | TXV KIT (For use with aluminum coils) | X | X | X | | | | |
| KSBTX0301PUR | TXV KIT (For use with aluminum coils) | | | | X | X | | |
| KSBTX0401PUR | TXV KIT (For use with aluminum coils) | | | | | | X | X |
| KSASH2301COP | SOUND BLKT KIT | X | X | X | X | | | |
| KSASH2401COP | SOUND BLKT KIT | | | | | X | X | X |

X = Accessory

# ACCESSORY USAGE GUIDELINE

| ACCESSORY | REQUIRED FOR LOW-AMBIENT COOLING APPLICATIONS (Below 55°F/12.8°C) | REQUIRED FOR LONG LINE APPLICATIONS* | REQUIRED FOR SEA COAST APPLICATIONS (Within 2 miles/3.22 km) |
|---|---|---|---|
| Ball Bearing Fan Motor | Standard | Standard | Standard |
| Compressor Start Assist Capacitor and Relay | Yes | Yes | No |
| Crankcase Heater | Yes | Yes | No |
| Evaporator Freeze Thermostat | Yes | No | No |
| Hard Shut-Off TXV | Yes | Yes | No |
| Liquid Line Solenoid Valve | No | See Long Line Guideline | No |
| MotorMaster® Control or Low-ambient Pressure Switch | Yes | No | No |
| Support Feet | Recommended | No | Recommended |
| Winter Start Control | Yes† | No | No |

*.For tubing set lengths between 80 and 200 ft. (24 and 61 m) horizontal or 35 ft. (10.7 m) vertical differential (total equivalent length), refer to the Residential Split-System Long Line Application Guideline.
†.Required if Low Pressure Switch is factory or field installed.

## Accessory Description and Usage (Listed Alphabetically)

**1. Ball-Bearing Fan Motor**

A fan motor with ball bearings which permits speed reduction while maintaining bearing lubrication.

Usage Guideline:

Required on all units when MotorMaster® is used.

**2. Compressor Start Assist - Capacitor and Relay**

Start capacitor and relay gives a ”hard” boost to compressor motor at each start up.

Usage Guideline:

Required for single-phase scroll compressors in the following applications:

Long line

Low ambient cooling

Suggested for all compressors in areas with a history of low voltage problems.

**3. Crankcase Heater**

An electric resistance heater which mounts to the base of the compressor to keep the lubricant warm during off cycles. Improves compressor lubrication on restart and minimizes the chance of liquid slugging.

Usage Guideline:

Required in low ambient cooling applications.

Required in long line applications.

Suggested in all commercial applications.

**4. Cycle Protector**

The cycle protector is designed to prevent compressor short cycling. This control provides an approximate 5-minute delay after power to the compressor has been interrupted for any reason, including power outage, protector control trip, thermostat jiggling, or normal cycling.

**5. Evaporator Freeze Thermostat**

An SPST temperature-actuated switch that stops unit operation when evaporator reaches freeze-up conditions.

Usage Guideline:

Required when low ambient kit has been added.

**6. Low-Ambient Pressure Switch Kit**

A long life pressure switch which is mounted to outdoor unit service valve. It is designed to cycle the outdoor fan motor in order to maintain head pressure within normal operating limits (approximately 100 psig to 225 psig). The control will maintain working head pressure at low-ambient temperatures down to 0°F (-18°C) when properly installed and also using wind baffles. Instructions provided in accessory kit.

Usage Guideline:

A Low-Ambient Pressure Switch or MotorMaster® Low-Ambient Controller must be used when cooling operation is used at outdoor temperatures below 55°F (12.8°C).

**7. MotorMaster® Low-Ambient Controller**

A fan-speed control device activated by a temperature sensor, designed to control condenser fan motor speed in response to the saturated, condensing temperature during operation in cooling mode only. For outdoor temperatures down to –10°F/–23.3°C), it maintains condensing temperature at 100°F ±10°F (37.8°C ±5.5°C).

Usage Guideline:

A MotorMaster® Low Ambient Controller or Low-Ambient Pressure Switch must be used when cooling operation is used at outdoor temperatures below 55°F (12.8°C).

Suggested for all commercial applications.

**8. Outdoor Air Temperature Sensor**

This device enables the thermostat to display the outdoor temperature. This device is also required to enable special thermostat features such as auxiliary heat lock out.

Usage Guideline:

Suggested for use with compatible Carrier thermostats.

**9. Sound Hood**

Wraparound sound reducing cover for the compressor. Reduces the sound level of the compressor.

Usage Guideline:

Suggested when unit is installed closer than 15 ft (4.57 m) to quiet areas, bedrooms, etc.

Suggested when unit is installed between two houses less than 10 ft (3 m) apart.

Manufacturer reserves the right to change, at any time, specifications and designs without notice and without obligations.

## Accessory Description and Usage (Listed Alphabetically) Continued

**10. Support Feet**

Four or five stick-on plastic feet that raise the unit 4 in. (101.6 mm) above the mounting pad. This allows sand, dirt, and other debris to be flushed from the unit base, minimizing corrosion.

Usage Guideline:

Suggested in the following applications:

Coastal installations.

Windy areas or where debris is normally circulating.

Rooftop installations.

For improved sound ratings.

**11. Thermostatic Expansion Valve (TXV)**

A modulating flow-control valve which meters refrigerant liquid flow rate into the evaporator in response to the superheat of the refrigerant gas leaving the evaporator.

Kit includes valve, adapter tubes, and external equalizer tube. Hard shut off types are available.

Usage Guideline:

Required to achieve AHRI ratings in certain equipment combinations. Refer to combination ratings.

Hard shut off TXV or LLS required in air conditioner long line applications.

Required for use on all zoning systems.

**12. Time-Delay Relay**

An SPST delay relay which briefly continues operation of indoor blower motor to provide additional cooling after the compressor cycles off.

**NOTE:** Most indoor unit controls include this feature. For those that do not, use the guideline below.

Usage Guideline:

For improved efficiency ratings for certain combinations of indoor and outdoor units. Refer to AHRI Directory of Certified Product Performance (AHRI Directory).

When a Time-Delay Relay (TDR) is called for in the AHRI Directory, use a 30 second TDR for MicroChannel Indoor units and use a 90 second TDR for Round Tube Plate Fin Indoor units.

**13. Winter Start Control**

This control is designed to alleviate nuisance opening of the low-pressure switch by bypassing it for the first 3 minutes of operation.

## AHRI RATINGS

For AHRI ratings certificates, please refer to the AHRI directory www.ahridirectory.org
Additional ratings and system combinations can be accessed via the Ratings Database here: www.MyCarrierRatings.com

## Electrical Data

| UNIT SIZE | V/PH | OPER VOLTS* | | COMPR | | FAN | MCA | MAX FUSE† or CKT BRK AMPS |
|---|---|---|---|---|---|---|---|---|
| | | MAX | MIN | LRA | RLA | FLA | | |
| 18 | 208-230/1 | 253 | 197 | 48.0 | 8.00 | 0.40 | 10.4 | 15 |
| 24 | | | | 59.5 | 11.70 | 0.50 | 15.1 | 25 |
| 30 | | | | 64.3 | 11.80 | 0.75 | 15.6 | 25 |
| 36 | | | | 80.1 | 12.20 | 1.05 | 16.4 | 25 |
| 42 | | | | 110.2 | 17.70 | 1.40 | 23.5 | 40 |
| 48 | | | | 124.0 | 18.50 | 1.40 | 24.5 | 40 |
| 60 | | | | 150.0 | 25.60 | 1.52 | 33.5 | 50 |

*.Permissible limits of the voltage range at which the unit will operate satisfactorily
†.Time-Delay fuse.

**FLA**- Full Load Amps
**LRA** - Locked Rotor Amps
**MCA**- Minimum Circuit Amps
**RLA**- Rated Load Amps
**NOTE**:Control circuit is 24V on all units and requires external power source. Copper wire must be used from service disconnect to unit.
All motors/compressors contain internal overload protection.
Complies with requirements of ASHRAE Standards 90.1

## Sound Power Level without sound shield

| UNIT SIZE | STANDARD RATING (dBA) | TYPICAL OCTAVE BAND SPECTRUM (without tone adjustment) (dB) | | | | | | |
|---|---|---|---|---|---|---|---|---|
| | | 125 | 250 | 500 | 1000 | 2000 | 4000 | 8000 |
| 18 | 75 | 68.9 | 65.3 | 65.6 | 71.4 | 68.4 | 63.8 | 61.2 |
| 24 | 74 | 66.9 | 72.6 | 70.0 | 70.7 | 66.6 | 62.7 | 59.2 |
| 30 | 73 | 69.5 | 68.9 | 68.9 | 68.5 | 62.8 | 60.0 | 57.4 |
| 36 | 75 | 70.8 | 73.6 | 71.5 | 69.5 | 66.1 | 63.6 | 58.1 |
| 42 | 73 | 73.9 | 72.6 | 70.3 | 68.2 | 64.3 | 61.2 | 57.3 |
| 48 | 76 | 72.3 | 74.1 | 71.2 | 70.6 | 63.8 | 61.6 | 55.9 |
| 60 | 76 | 70.0 | 75.0 | 71.9 | 73.7 | 66.0 | 61.7 | 56.3 |

**NOTE**: Tested in compliance with AHRI 270 but not listed with AHRI.

## Sound Power Level with Accessory sound shield

| UNIT SIZE | STANDARD RATING (dBA) | TYPICAL OCTAVE BAND SPECTRUM (without tone adjustment) (dB) | | | | | | |
|---|---|---|---|---|---|---|---|---|
| | | 125 | 250 | 500 | 1000 | 2000 | 4000 | 8000 |
| 18 | 75 | 66.4 | 67.0 | 66.1 | 71.5 | 66.6 | 62.5 | 61.1 |
| 24 | 74 | 68.4 | 72.2 | 70.4 | 70.2 | 66.0 | 62.3 | 58.5 |
| 30 | 72 | 69.3 | 69.7 | 68.8 | 68.0 | 62.4 | 59.5 | 55.7 |
| 36 | 75 | 71.0 | 73.7 | 71.2 | 69.0 | 65.4 | 63.0 | 57.7 |
| 42 | 73 | 75.3 | 71.7 | 70.0 | 68.1 | 63.9 | 60.2 | 55.3 |
| 48 | 74 | 73.3 | 74.2 | 71.6 | 69.9 | 63.8 | 60.4 | 54.7 |
| 60 | 75 | 70.2 | 73.9 | 71.8 | 72.4 | 64.2 | 60.4 | 54.6 |

**NOTE**: Tested in compliance with AHRI 270 but not listed with AHRI.

## Charging Subcooling (TXV-Type Expansion Device)

| UNIT SIZE | REQUIRED SUBCOOLING (F) | Indoor |
|---|---|---|
| 18 | 14 | TXV |
| 24 | 10 | |
| 30 | 10 | |
| 36 | 10 | |
| 42 | 11 | |
| 48 | 12 | |
| 60 | 12 | |

# DIMENSIONS

| UNIT | SERIES | ELECTRICAL CHARACTERISTICS | | | | A | | B | | C | | D | | E | | F | | G | | H | | I | | J | | K | | OPERATING WEIGHT | | SHIPPING WEIGHT | | SHIPPING LENGTH / WIDTH (Sq.) | | SHIPPING HEIGHT | |
|---|---|---|---|---|---|---|---|---|---|---|---|---|---|---|---|---|---|---|---|---|---|---|---|---|---|---|---|---|---|---|---|---|---|---|---|
| | | 208-230-1-60 | 208/230-3-60 | 460-3-60 | 575-3-60 | INCH | MM | INCH | MM | INCH | MM | INCH | MM | INCH | MM | INCH | MM | INCH | MM | INCH | MM | INCH | MM | INCH | MM | INCH | MM | Lbs | Kgs | Lbs | Kgs | INCH | MM | INCH | MM |
| 24SCB418N*0 | 0 | Y | N | N | N | 23 1/8 | 587.3 | 25 5/16 | 642.9 | 3/4 | 19.1 | 4 7/16 | 113.0 | 18 1/16 | 459.0 | 7 13/16 | 197.9 | 5/16 | 7.9 | 3 | 76.2 | 11 | 279.4 | 10 1/2 | 266.7 | 10 1/4 | 260.4 | 100 | 45.4 | 115 | 52.2 | 26 1/8 | 664.0 | 29 5/8 | 753.0 |
| 24SCB424N*0 | 0 | Y | N | N | N | 25 3/4 | 654.0 | 25 5/16 | 642.4 | 3/4 | 19.1 | 4 7/16 | 113.0 | 21 1/4 | 539.9 | 9 1/8 | 231.3 | 5/16 | 7.9 | 3 | 76.2 | 13 1/2 | 342.9 | 13 | 330.2 | 12 1/2 | 317.5 | 111 | 50.3 | 128 | 58.1 | 28 3/4 | 730.0 | 29 5/8 | 753.0 |
| 24SCB430N*0 | 0 | Y | N | N | N | 31 3/16 | 792.5 | 32 1/16 | 815.1 | 3/4 | 19.1 | 6 9/16 | 166.1 | 24 11/16 | 626.3 | 9 1/8 | 231.3 | 5/16 | 7.9 | 3 | 76.2 | 15 | 381.0 | 15 3/4 | 400.1 | 16 | 406.4 | 139 | 63.0 | 164 | 74.4 | 34 1/4 | 870.0 | 36 7/16 | 925.1 |
| 24SCB436N*0 | 0 | Y | N | N | N | 31 3/16 | 792.5 | 25 5/16 | 642.4 | 7/8 | 22.2 | 6 9/16 | 166.1 | 24 11/16 | 626.3 | 9 1/8 | 231.3 | 5/16 | 7.9 | 3 | 76.2 | 14 1/2 | 368.3 | 15 | 381.0 | 11 1/2 | 292.1 | 132 | 59.9 | 156 | 70.8 | 34 1/4 | 870.0 | 29 5/8 | 753.0 |
| 24SCB442N*0 | 0 | Y | N | N | N | 31 3/16 | 792.5 | 42 5/16 | 1074.2 | 7/8 | 22.2 | 6 9/16 | 166.1 | 24 11/16 | 626.3 | 9 1/8 | 231.3 | 5/16 | 7.9 | 3 | 76.2 | 17 | 431.8 | 15 1/2 | 393.7 | 22 1/2 | 571.5 | 181 | 82.1 | 207 | 93.9 | 34 1/4 | 870.0 | 46 9/16 | 1182.7 |
| 24SCB448N*0 | 0 | Y | N | N | N | 31 3/16 | 792.5 | 28 11/16 | 728.7 | 7/8 | 22.2 | 6 9/16 | 166.1 | 24 11/16 | 626.3 | 9 1/8 | 231.3 | 5/16 | 7.9 | 3 | 76.2 | 14 1/2 | 368.3 | 14 1/2 | 368.3 | 12 1/2 | 317.5 | 171 | 77.6 | 196 | 88.9 | 34 1/4 | 870.0 | 33 | 838.5 |
| 24SCB460N*0 | 0 | Y | N | N | N | 31 3/16 | 792.5 | 35 1/2 | 901.4 | 7/8 | 22.2 | 6 9/16 | 166.1 | 24 11/16 | 626.3 | 9 1/8 | 231.3 | 5/16 | 7.9 | 3 | 76.2 | 15 1/2 | 393.7 | 16 | 406.4 | 18 1/2 | 469.9 | 190 | 86.2 | 215 | 97.5 | 34 1/4 | 870.0 | 39 13/16 | 1011.2 |

Y=YES
N=NO

NOTES:

1. CENTER OF GRAVITY .

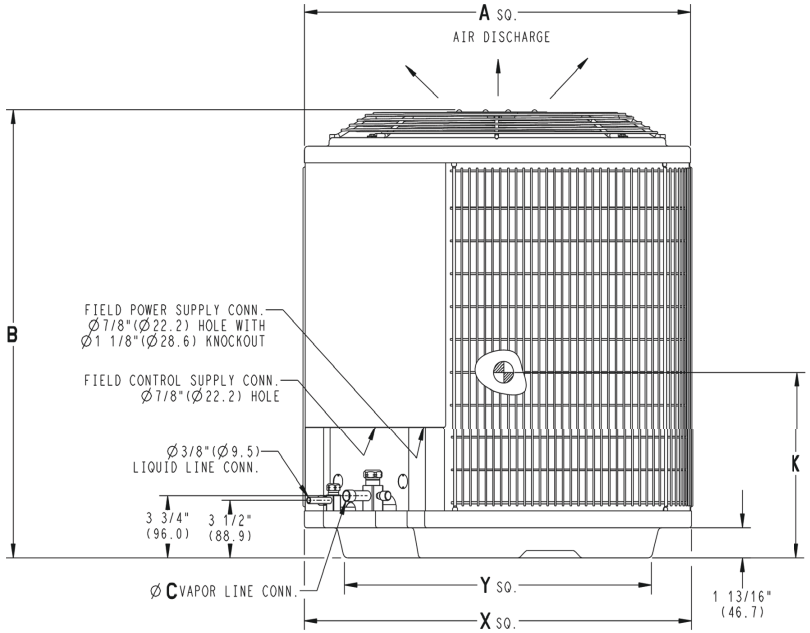


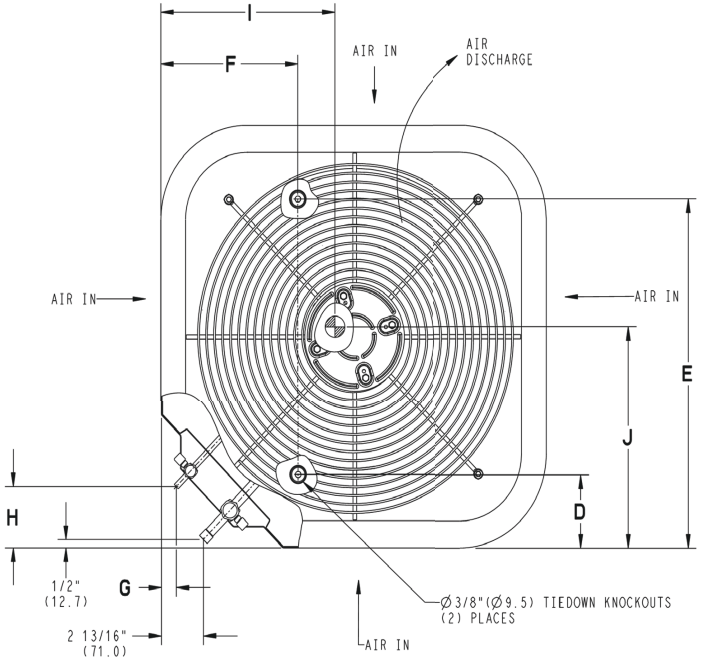


| UNIT SIZE | "X" MINIMUM GROUND MOUNTING PAD APPLICATION DIMENSIONS | | "Y" MINIMUM ROOF-TOP MOUNTING PAD APPLICATION DIMENSIONS | |
|---|---|---|---|---|
| 18 | 23 1/8 | 587.3 | 17 7/8 | 454.6 |
| 24 | 25 3/4 | 654.0 | 20 7/16 | 518.5 |
| 30,36,42,48,60 | 31 3/16 | 792.5 | 22 15/16 | 583.2 |
| - | 35 | 889.0 | 26 3/4 | 679.7 |

NOTE: ALL DIMENSIONS IN INCH (MM)

U.S. ECCN: Not Subject to Regulation (N.S.R.)

SD5750-4 (2) REV. D

Manufacturer reserves the right to change, at any time, specifications and designs without notice and without obligations.

## Clearances

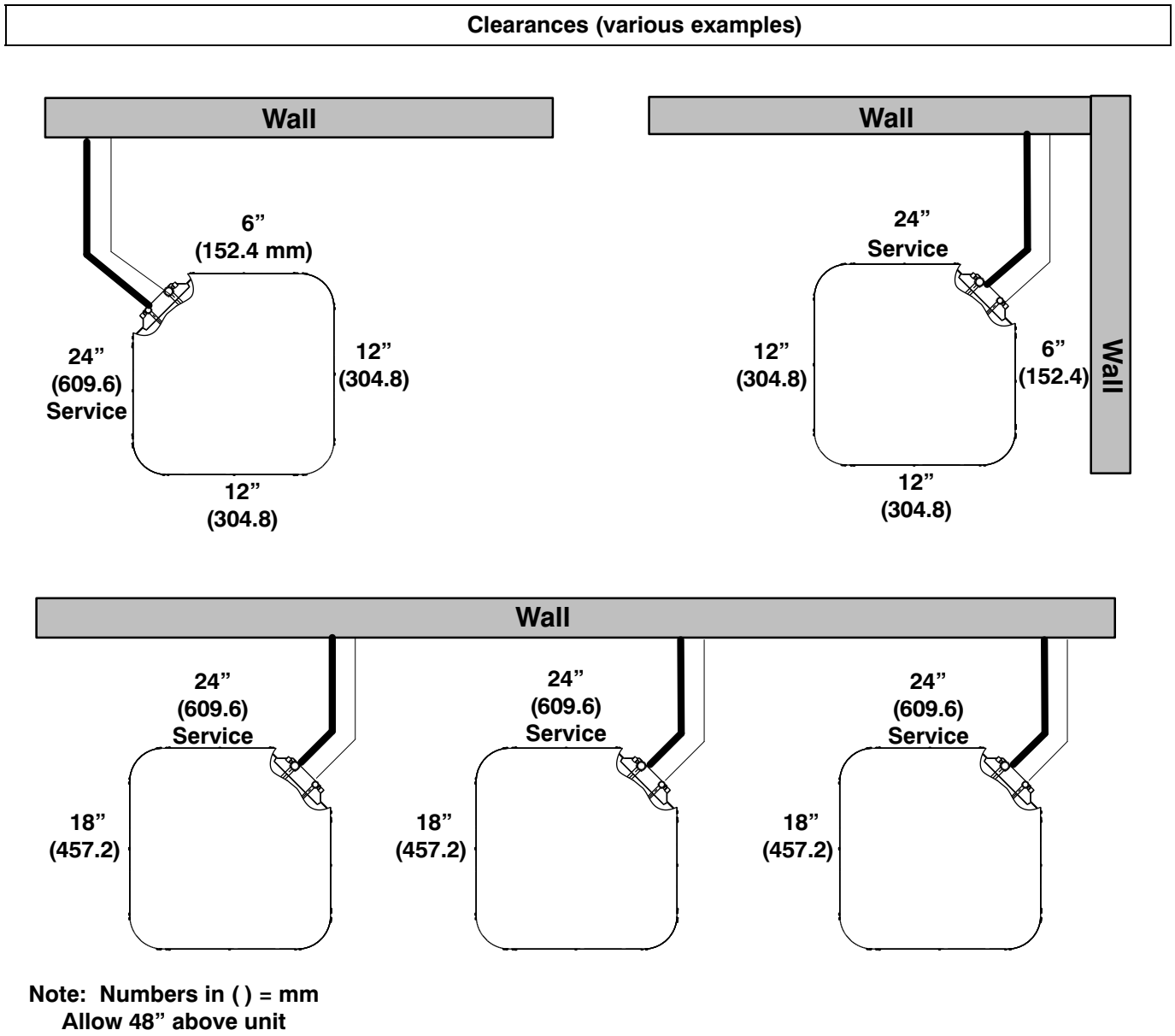


**IMPORTANT:** When installing multiple units in an alcove, roof well, or partially enclosed area, ensure there is adequate ventilation to prevent re-circulation of discharge air.

# DETAILED COOLING CAPACITIES

| EVAPORATOR AIR | | CONDENSER ENTERING AIR TEMPERATURES °F (°C) | | | | | | | | | | | | | | | | | |
|---|---|---|---|---|---|---|---|---|---|---|---|---|---|---|---|---|---|---|---|
| | | 75 (23.9) | | | 85 (29.4) | | | 95 (35) | | | 105 (40.6) | | | 115 (46.1) | | | 125 (51.7) | | |
| CFM | EWB | Capacity MBtuh | | Total Sys. | Capacity MBtuh | | Total Sys. | Capacity MBtuh | | Total Sys. | Capacity MBtuh | | Total Sys. | Capacity MBtuh | | Total Sys. | Capacity MBtuh | | Total Sys. |
| | | Total | Sens‡ | kW** | Total | Sens‡ | kW** | Total | Sens‡ | kW** | Total | Sens‡ | kW** | Total | Sens‡ | kW** | Total | Sens‡ | kW** |
| **24SCB418N0030 Outdoor Section With CAW**1917AL* Indoor Section** | | | | | | | | | | | | | | | | | | | |
| 525 | 72.0 (22.2) | 21.36 | 10.47 | 1.23 | 20.54 | 10.18 | 1.37 | 19.58 | 9.85 | 1.53 | 18.48 | 9.48 | 1.71 | 17.26 | 9.08 | 1.92 | 15.94 | 8.64 | 2.17 |
| | 67.0 (19.4) | 19.43 | 12.90 | 1.23 | 18.64 | 12.60 | 1.37 | 17.71 | 12.25 | 1.53 | 16.65 | 11.85 | 1.71 | 15.50 | 11.43 | 1.92 | 14.28 | 10.99 | 2.18 |
| | 63.0 (17.2)†† | 18.04 | 12.41 | 1.23 | 17.26 | 12.09 | 1.38 | 16.34 | 11.72 | 1.54 | 15.33 | 11.32 | 1.72 | 14.22 | 10.88 | 1.94 | 13.09 | 10.44 | 2.20 |
| | 62.0 (16.7) | 17.67 | 15.27 | 1.23 | 16.91 | 14.94 | 1.38 | 16.03 | 14.55 | 1.53 | 15.15 | 15.15 | 1.72 | 14.30 | 14.30 | 1.93 | 13.39 | 13.39 | 2.19 |
| | 57.0 (13.9) | 17.21 | 17.21 | 1.23 | 16.61 | 16.61 | 1.38 | 15.91 | 15.91 | 1.53 | 15.12 | 15.12 | 1.72 | 14.28 | 14.28 | 1.93 | 13.37 | 13.37 | 2.19 |
| 600 | 72.0 (22.2) | 21.71 | 11.04 | 1.26 | 20.87 | 10.75 | 1.41 | 19.88 | 10.42 | 1.57 | 18.74 | 10.05 | 1.74 | 17.49 | 9.64 | 1.95 | 16.13 | 9.21 | 2.20 |
| | 67.0 (19.4) | 19.77 | 13.82 | 1.26 | 18.96 | 13.52 | 1.41 | 18.00 | 13.17 | 1.57 | 16.91 | 12.77 | 1.75 | 15.73 | 12.34 | 1.96 | 14.47 | 11.89 | 2.21 |
| | 63.0 (17.2)†† | 18.38 | 13.28 | 1.27 | 17.58 | 12.96 | 1.41 | 16.64 | 12.58 | 1.57 | 15.59 | 12.17 | 1.75 | 14.46 | 11.73 | 1.97 | 13.28 | 11.27 | 2.23 |
| | 62.0 (16.7) | 18.08 | 18.08 | 1.27 | 17.38 | 17.38 | 1.41 | 16.64 | 16.64 | 1.57 | 15.80 | 15.80 | 1.75 | 14.90 | 14.90 | 1.96 | 13.92 | 13.92 | 2.22 |
| | 57.0 (13.9) | 17.98 | 17.98 | 1.27 | 17.35 | 17.35 | 1.41 | 16.61 | 16.61 | 1.57 | 15.78 | 15.78 | 1.75 | 14.87 | 14.87 | 1.96 | 13.90 | 13.90 | 2.22 |
| 675 | 72.0 (22.2) | 21.95 | 11.59 | 1.30 | 21.09 | 11.31 | 1.44 | 20.07 | 10.98 | 1.60 | 18.92 | 10.60 | 1.78 | 17.64 | 10.20 | 1.99 | 16.24 | 9.76 | 2.23 |
| | 67.0 (19.4) | 20.01 | 14.72 | 1.30 | 19.19 | 14.42 | 1.44 | 18.21 | 14.07 | 1.60 | 17.11 | 13.66 | 1.78 | 15.90 | 13.23 | 1.99 | 14.62 | 12.76 | 2.24 |
| | 63.0 (17.2)†† | 18.63 | 14.11 | 1.30 | 17.82 | 13.79 | 1.44 | 16.85 | 13.41 | 1.60 | 15.78 | 12.99 | 1.79 | 14.63 | 12.54 | 2.00 | 13.43 | 12.05 | 2.26 |
| | 62.0 (16.7) | 18.64 | 18.64 | 1.30 | 17.99 | 17.99 | 1.44 | 17.22 | 17.22 | 1.60 | 16.34 | 16.34 | 1.78 | 15.39 | 15.39 | 1.99 | 14.36 | 14.36 | 2.25 |
| | 57.0 (13.9) | 18.61 | 18.61 | 1.30 | 17.96 | 17.96 | 1.44 | 17.19 | 17.19 | 1.60 | 16.32 | 16.32 | 1.78 | 15.37 | 15.37 | 1.99 | 14.34 | 14.34 | 2.25 |
| **24SCB424N0030 Outdoor Section With CSWVA2414XMC* Indoor Section** | | | | | | | | | | | | | | | | | | | |
| 700 | 72 (22.2) | 27.12 | 13.79 | 1.58 | 26.00 | 13.38 | 1.76 | 24.79 | 12.92 | 1.96 | 23.58 | 12.43 | 2.19 | 22.15 | 11.88 | 2.46 | 20.56 | 11.27 | 2.76 |
| | 67 (19.4) | 24.86 | 16.90 | 1.59 | 23.89 | 16.45 | 1.77 | 22.79 | 15.97 | 1.97 | 21.51 | 15.43 | 2.20 | 20.19 | 14.83 | 2.48 | 18.69 | 14.18 | 2.79 |
| | 63 (17.2)†† | 23.09 | 16.32 | 1.59 | 22.19 | 15.88 | 1.77 | 21.10 | 15.38 | 1.98 | 19.93 | 14.79 | 2.22 | 18.64 | 14.19 | 2.49 | 17.22 | 13.52 | 2.80 |
| | 62 (16.7) | 22.57 | 19.79 | 1.59 | 21.76 | 19.40 | 1.77 | 20.76 | 18.96 | 1.98 | 19.56 | 18.32 | 2.22 | 18.39 | 17.79 | 2.49 | 17.32 | 17.32 | 2.80 |
| | 57 (13.9) | 22.09 | 22.09 | 1.60 | 21.50 | 21.50 | 1.78 | 20.38 | 20.38 | 1.98 | 19.57 | 19.57 | 2.22 | 18.45 | 18.45 | 2.49 | 17.26 | 17.26 | 2.80 |
| 805 | 72 (22.2) | 27.54 | 14.33 | 1.62 | 26.39 | 13.90 | 1.80 | 25.30 | 13.43 | 2.00 | 23.98 | 12.89 | 2.24 | 22.47 | 12.35 | 2.50 | 20.75 | 11.69 | 2.80 |
| | 67 (19.4) | 25.37 | 17.77 | 1.63 | 24.34 | 17.32 | 1.81 | 23.20 | 16.82 | 2.02 | 21.80 | 16.17 | 2.24 | 20.50 | 15.65 | 2.52 | 18.97 | 14.99 | 2.83 |
| | 63 (17.2)†† | 23.58 | 17.13 | 1.64 | 22.58 | 16.65 | 1.82 | 21.52 | 16.23 | 2.02 | 20.09 | 15.48 | 2.25 | 18.94 | 14.94 | 2.54 | 17.47 | 14.28 | 2.85 |
| | 62 (16.7) | 23.07 | 21.03 | 1.64 | 22.18 | 20.62 | 1.82 | 21.12 | 20.11 | 2.03 | 19.93 | 17.98 | 2.26 | 19.13 | 19.13 | 2.53 | 17.90 | 17.90 | 2.85 |
| | 57 (13.9) | 23.01 | 23.01 | 1.64 | 22.07 | 22.07 | 1.82 | 21.13 | 21.13 | 2.03 | 20.28 | 20.28 | 2.26 | 19.09 | 19.09 | 2.54 | 17.83 | 17.83 | 2.84 |
| 900 | 72 (22.2) | 27.81 | 14.76 | 1.66 | 26.65 | 14.31 | 1.84 | 25.58 | 13.83 | 2.04 | 24.30 | 13.30 | 2.28 | 22.68 | 12.74 | 2.54 | 21.00 | 12.11 | 2.85 |
| | 67 (19.4) | 25.70 | 18.49 | 1.68 | 24.63 | 18.03 | 1.85 | 23.44 | 17.51 | 2.06 | 22.14 | 16.94 | 2.29 | 20.70 | 16.35 | 2.56 | 19.12 | 15.69 | 2.87 |
| | 63 (17.2)†† | 23.95 | 17.84 | 1.68 | 22.89 | 17.33 | 1.86 | 21.75 | 16.80 | 2.07 | 20.49 | 16.21 | 2.30 | 19.13 | 15.58 | 2.58 | 17.61 | 14.90 | 2.89 |
| | 62 (16.7) | 23.47 | 22.13 | 1.68 | 22.96 | 21.92 | 1.86 | 21.56 | 21.56 | 2.07 | 20.53 | 20.53 | 2.29 | 19.56 | 19.56 | 2.57 | 18.17 | 18.17 | 2.87 |
| | 57 (13.9) | 23.63 | 23.63 | 1.68 | 22.77 | 22.77 | 1.86 | 21.69 | 21.69 | 2.07 | 20.71 | 20.71 | 2.30 | 19.56 | 19.56 | 2.58 | 18.18 | 18.18 | 2.88 |
| **24SCB430N0030 Outdoor Section With CAW**3721AL* Indoor Section** | | | | | | | | | | | | | | | | | | | |
| 875 | 72 (22.2) | 34.39 | 17.38 | 1.99 | 32.89 | 16.86 | 2.20 | 31.29 | 16.31 | 2.44 | 29.57 | 15.72 | 2.72 | 27.69 | 15.09 | 3.05 | 25.62 | 14.41 | 3.43 |
| | 67 (19.4) | 31.24 | 21.52 | 2.00 | 29.86 | 20.98 | 2.21 | 28.39 | 20.42 | 2.45 | 26.82 | 19.83 | 2.73 | 25.09 | 19.18 | 3.06 | 23.18 | 18.47 | 3.44 |
| | 63 (17.2)†† | 29.00 | 20.68 | 2.01 | 27.71 | 20.14 | 2.22 | 26.34 | 19.58 | 2.46 | 24.85 | 18.97 | 2.74 | 23.23 | 18.32 | 3.07 | 21.41 | 17.59 | 3.46 |
| | 62 (16.7) | 28.48 | 25.54 | 2.01 | 27.24 | 24.97 | 2.22 | 25.99 | 25.99 | 2.46 | 24.73 | 24.73 | 2.76 | 23.45 | 23.45 | 3.07 | 21.92 | 21.92 | 3.54 |
| | 57 (13.9) | 27.96 | 27.96 | 2.01 | 26.96 | 26.96 | 2.22 | 25.89 | 25.89 | 2.46 | 24.71 | 24.71 | 2.75 | 23.41 | 23.41 | 3.07 | 21.95 | 21.95 | 3.45 |
| 1000 | 72 (22.2) | 34.92 | 18.35 | 2.05 | 33.36 | 17.82 | 2.25 | 31.70 | 17.27 | 2.49 | 29.96 | 16.72 | 2.79 | 27.97 | 16.03 | 3.11 | 25.83 | 15.34 | 3.49 |
| | 67 (19.4) | 31.76 | 23.06 | 2.06 | 30.32 | 22.52 | 2.26 | 28.80 | 21.95 | 2.50 | 27.22 | 21.35 | 2.80 | 25.39 | 20.68 | 3.12 | 23.43 | 19.96 | 3.50 |
| | 63 (17.2)†† | 29.51 | 22.12 | 2.07 | 28.16 | 21.56 | 2.27 | 26.74 | 20.99 | 2.51 | 25.19 | 20.35 | 2.82 | 23.52 | 19.70 | 3.13 | 21.69 | 18.97 | 3.51 |
| | 62 (16.7) | 29.20 | 29.20 | 2.07 | 28.12 | 28.12 | 2.27 | 26.96 | 26.96 | 2.51 | 25.70 | 25.70 | 2.79 | 24.31 | 24.31 | 3.12 | 22.75 | 22.75 | 3.50 |
| | 57 (13.9) | 29.16 | 29.16 | 2.07 | 28.07 | 28.07 | 2.27 | 26.92 | 26.92 | 2.51 | 25.67 | 25.67 | 2.80 | 24.27 | 24.27 | 3.12 | 22.72 | 22.72 | 3.50 |
| 1125 | 72 (22.2) | 35.29 | 19.30 | 2.10 | 33.68 | 18.77 | 2.31 | 31.97 | 18.21 | 2.55 | 30.14 | 17.61 | 2.83 | 28.14 | 16.96 | 3.16 | 25.95 | 16.25 | 3.54 |
| | 67 (19.4) | 32.14 | 24.57 | 2.12 | 30.66 | 24.01 | 2.32 | 29.10 | 23.43 | 2.56 | 27.45 | 22.81 | 2.85 | 25.61 | 22.13 | 3.17 | 23.66 | 21.36 | 3.57 |
| | 63 (17.2)†† | 29.88 | 23.51 | 2.13 | 28.49 | 22.95 | 2.33 | 27.03 | 22.36 | 2.57 | 25.46 | 21.73 | 2.85 | 23.75 | 21.03 | 3.18 | 21.90 | 20.22 | 3.56 |
| | 62 (16.7) | 30.19 | 30.19 | 2.12 | 29.04 | 29.04 | 2.33 | 27.81 | 27.81 | 2.57 | 26.50 | 26.50 | 2.86 | 25.01 | 25.01 | 3.18 | 23.37 | 23.37 | 3.55 |
| | 57 (13.9) | 30.14 | 30.14 | 2.12 | 29.00 | 29.00 | 2.33 | 27.77 | 27.77 | 2.57 | 26.46 | 26.46 | 2.85 | 24.98 | 24.98 | 3.18 | 23.34 | 23.34 | 3.55 |

Manufacturer reserves the right to change, at any time, specifications and designs without notice and without obligations.

# DETAILED COOLING CAPACITIES

| EVAPORATOR AIR | | CONDENSER ENTERING AIR TEMPERATURES °F (°C) | | | | | | | | | | | | | | | | | |
|---|---|---|---|---|---|---|---|---|---|---|---|---|---|---|---|---|---|---|---|
| | | 75 (23.9) | | | 85 (29.4) | | | 95 (35) | | | 105 (40.6) | | | 115 (46.1) | | | 125 (51.7) | | |
| CFM | EWB | Capacity MBtuh | | Total Sys. kW** | Capacity MBtuh | | Total Sys. kW** | Capacity MBtuh | | Total Sys. kW** | Capacity MBtuh | | Total Sys. kW** | Capacity MBtuh | | Total Sys. kW** | Capacity MBtuh | | Total Sys. kW** |
| | | Total | Sens‡ | | Total | Sens‡ | | Total | Sens‡ | | Total | Sens‡ | | Total | Sens‡ | | Total | Sens‡ | |
| **24SCB436N0030 Outdoor Section With CVWVA3721XMC* Indoor Section** | | | | | | | | | | | | | | | | | | | |
| 1090 | 72 (22.2) | 40.69 | 19.90 | 2.41 | 38.81 | 19.27 | 2.66 | 36.90 | 18.55 | 2.93 | 34.80 | 17.74 | 3.24 | 32.32 | 16.95 | 3.61 | 29.76 | 16.06 | 4.05 |
| | 67 (19.4) | 37.24 | 24.64 | 2.42 | 35.72 | 23.66 | 2.67 | 33.80 | 23.24 | 2.94 | 31.87 | 22.38 | 3.25 | 29.66 | 21.55 | 3.61 | 27.24 | 20.62 | 4.06 |
| | 63 (17.2)†† | 34.67 | 23.82 | 2.41 | 33.26 | 23.01 | 2.67 | 31.46 | 22.47 | 2.94 | 29.62 | 21.58 | 3.25 | 27.60 | 20.72 | 3.61 | 25.33 | 19.76 | 4.04 |
| | 62 (16.7) | 34.01 | 29.13 | 2.41 | 32.44 | 28.47 | 2.67 | 30.82 | 27.76 | 2.94 | 29.10 | 27.01 | 3.25 | 27.71 | 27.71 | 3.61 | 25.82 | 25.82 | 4.05 |
| | 57 (13.9) | 33.39 | 33.39 | 2.41 | 32.23 | 32.23 | 2.67 | 30.78 | 30.78 | 2.94 | 29.37 | 29.37 | 3.25 | 27.60 | 27.60 | 3.60 | 25.78 | 25.78 | 4.05 |
| 1200 | 72 (22.2) | 41.15 | 20.46 | 2.46 | 39.22 | 19.82 | 2.71 | 37.24 | 19.05 | 2.98 | 35.04 | 18.27 | 3.29 | 32.56 | 17.45 | 3.66 | 29.93 | 16.53 | 4.10 |
| | 67 (19.4) | 37.72 | 25.54 | 2.46 | 36.08 | 24.90 | 2.72 | 34.15 | 24.09 | 2.99 | 32.09 | 23.27 | 3.30 | 29.90 | 22.38 | 3.66 | 27.42 | 21.47 | 4.10 |
| | 63 (17.2)†† | 35.02 | 23.92 | 2.47 | 33.56 | 23.97 | 2.72 | 31.80 | 23.19 | 2.99 | 29.92 | 22.39 | 3.30 | 27.84 | 21.51 | 3.66 | 25.50 | 20.53 | 4.10 |
| | 62 (16.7) | 34.48 | 30.45 | 2.47 | 32.90 | 29.75 | 2.72 | 31.91 | 29.92 | 2.99 | 30.06 | 30.06 | 3.30 | 28.26 | 28.26 | 3.66 | 26.48 | 26.48 | 4.10 |
| | 57 (13.9) | 34.26 | 34.26 | 2.47 | 33.05 | 33.05 | 2.72 | 31.54 | 31.54 | 2.99 | 30.03 | 30.03 | 3.30 | 28.25 | 28.25 | 3.67 | 26.28 | 26.28 | 4.10 |
| 1350 | 72 (22.2) | 41.63 | 21.14 | 2.52 | 39.74 | 20.44 | 2.78 | 37.66 | 19.72 | 3.05 | 35.34 | 18.92 | 3.36 | 32.83 | 18.06 | 3.73 | 30.09 | 17.10 | 4.17 |
| | 67 (19.4) | 38.24 | 26.68 | 2.53 | 36.46 | 25.96 | 2.78 | 34.51 | 25.20 | 3.06 | 32.34 | 24.42 | 3.37 | 30.09 | 23.49 | 3.73 | 27.57 | 22.55 | 4.17 |
| | 63 (17.2)†† | 35.61 | 25.70 | 2.53 | 33.97 | 25.00 | 2.79 | 32.14 | 24.21 | 3.06 | 30.10 | 23.35 | 3.36 | 28.07 | 22.60 | 3.73 | 25.65 | 21.51 | 4.16 |
| | 62 (16.7) | 36.30 | 29.92 | 2.54 | 34.32 | 32.06 | 2.79 | 32.34 | 32.34 | 3.06 | 30.75 | 30.75 | 3.37 | 28.95 | 28.95 | 3.73 | 26.86 | 26.86 | 4.17 |
| | 57 (13.9) | 35.27 | 35.27 | 2.53 | 33.95 | 33.95 | 2.79 | 32.44 | 32.44 | 3.06 | 30.72 | 30.72 | 3.37 | 28.85 | 28.85 | 3.73 | 26.83 | 26.83 | 4.17 |
| **24SCB442N0030 Outdoor Section With CVWVA4221XMC* Indoor Section** | | | | | | | | | | | | | | | | | | | |
| 1225 | 72 (22.2) | 46.39 | 23.82 | 2.89 | 44.31 | 23.00 | 3.17 | 42.29 | 22.15 | 3.47 | 40.04 | 21.26 | 3.82 | 37.65 | 20.36 | 4.21 | 35.07 | 19.31 | 4.64 |
| | 67 (19.4) | 42.01 | 28.83 | 2.89 | 40.38 | 28.12 | 3.16 | 38.40 | 27.16 | 3.47 | 36.33 | 26.24 | 3.81 | 34.14 | 25.28 | 4.20 | 31.79 | 24.24 | 4.64 |
| | 63 (17.2)†† | 38.81 | 27.78 | 2.89 | 37.18 | 26.96 | 3.16 | 35.44 | 26.12 | 3.46 | 33.55 | 25.22 | 3.81 | 31.50 | 24.24 | 4.19 | 29.30 | 23.18 | 4.62 |
| | 62 (16.7) | 38.00 | 33.69 | 2.89 | 36.43 | 32.85 | 3.16 | 34.78 | 32.08 | 3.46 | 32.89 | 31.10 | 3.80 | 30.92 | 30.17 | 4.19 | 29.16 | 29.16 | 4.62 |
| | 57 (13.9) | 36.62 | 36.62 | 2.89 | 35.50 | 35.50 | 3.16 | 34.20 | 34.20 | 3.46 | 32.74 | 32.74 | 3.80 | 31.07 | 31.07 | 4.19 | 29.26 | 29.26 | 4.62 |
| 1380 | 72 (22.2) | 47.19 | 24.61 | 2.97 | 45.21 | 23.77 | 3.24 | 43.00 | 22.90 | 3.55 | 40.67 | 21.99 | 3.90 | 38.13 | 21.02 | 4.29 | 35.43 | 19.99 | 4.72 |
| | 67 (19.4) | 42.84 | 30.07 | 2.97 | 40.94 | 29.23 | 3.24 | 39.00 | 28.34 | 3.55 | 36.87 | 27.42 | 3.89 | 34.60 | 26.43 | 4.28 | 32.13 | 25.38 | 4.71 |
| | 63 (17.2)†† | 39.55 | 28.93 | 2.97 | 37.86 | 28.10 | 3.24 | 36.04 | 27.39 | 3.54 | 34.06 | 26.28 | 3.88 | 31.94 | 25.30 | 4.27 | 29.63 | 24.25 | 4.70 |
| | 62 (16.7) | 38.77 | 35.39 | 2.96 | 37.09 | 34.54 | 3.23 | 35.35 | 33.69 | 3.54 | 33.87 | 30.17 | 3.89 | 31.31 | 32.28 | 4.26 | 30.14 | 30.14 | 4.72 |
| | 57 (13.9) | 37.87 | 37.87 | 2.96 | 36.72 | 36.72 | 3.23 | 35.32 | 35.32 | 3.54 | 33.71 | 33.71 | 3.88 | 32.00 | 32.00 | 4.28 | 29.94 | 29.94 | 4.66 |
| 1575 | 72 (22.2) | 48.16 | 25.44 | 3.06 | 45.96 | 24.63 | 3.34 | 43.73 | 23.76 | 3.65 | 41.29 | 22.81 | 3.99 | 38.61 | 21.81 | 4.38 | 35.78 | 20.70 | 4.82 |
| | 67 (19.4) | 43.67 | 31.54 | 3.06 | 41.70 | 30.65 | 3.33 | 39.63 | 29.77 | 3.64 | 37.39 | 28.81 | 3.98 | 35.02 | 27.80 | 4.38 | 32.47 | 26.73 | 4.81 |
| | 63 (17.2)†† | 40.32 | 30.30 | 3.06 | 38.53 | 29.42 | 3.33 | 36.60 | 28.54 | 3.63 | 34.54 | 27.57 | 3.98 | 32.33 | 26.53 | 4.35 | 29.94 | 25.45 | 4.80 |
| | 62 (16.7) | 39.54 | 37.49 | 3.06 | 37.80 | 36.67 | 3.33 | 36.70 | 35.79 | 3.63 | 34.71 | 34.71 | 3.98 | 32.91 | 32.91 | 4.36 | 30.96 | 30.96 | 4.80 |
| | 57 (13.9) | 39.24 | 39.24 | 3.06 | 38.00 | 38.00 | 3.33 | 36.36 | 36.36 | 3.63 | 34.72 | 34.72 | 3.98 | 32.80 | 32.80 | 4.36 | 30.90 | 30.90 | 4.80 |
| **24SCB448N0030 Outdoor Section With CAW**6124AL* Indoor Section** | | | | | | | | | | | | | | | | | | | |
| 1400 | 72 (22.2) | 54.25 | 27.28 | 3.40 | 51.97 | 26.48 | 3.71 | 49.55 | 25.64 | 4.08 | 46.97 | 24.75 | 4.50 | 44.19 | 23.81 | 4.97 | 41.16 | 22.81 | 5.50 |
| | 67 (19.4) | 49.34 | 33.66 | 3.39 | 47.24 | 32.84 | 3.70 | 45.01 | 31.98 | 4.06 | 42.64 | 31.08 | 4.48 | 40.14 | 30.09 | 4.95 | 37.32 | 29.08 | 5.47 |
| | 63 (17.2)†† | 45.82 | 32.37 | 3.39 | 43.85 | 31.54 | 3.69 | 41.76 | 30.68 | 4.05 | 39.55 | 29.76 | 4.46 | 37.16 | 28.79 | 4.93 | 34.57 | 27.75 | 5.45 |
| | 62 (16.7) | 45.10 | 39.88 | 3.38 | 43.21 | 39.02 | 3.69 | 41.23 | 38.08 | 4.05 | 39.25 | 39.25 | 4.46 | 37.33 | 37.33 | 4.93 | 35.21 | 35.21 | 5.46 |
| | 57 (13.9) | 44.11 | 44.11 | 3.38 | 42.58 | 42.58 | 3.69 | 40.95 | 40.95 | 4.05 | 39.19 | 39.19 | 4.46 | 37.23 | 37.23 | 4.93 | 35.15 | 35.15 | 5.46 |
| 1545 | 72 (22.2) | 54.89 | 28.36 | 3.47 | 52.54 | 27.56 | 3.78 | 50.05 | 26.71 | 4.15 | 47.40 | 25.81 | 4.57 | 44.55 | 24.86 | 5.05 | 41.45 | 23.84 | 5.57 |
| | 67 (19.4) | 49.97 | 35.37 | 3.46 | 47.80 | 34.54 | 3.77 | 45.50 | 33.67 | 4.14 | 43.10 | 32.76 | 4.55 | 40.48 | 31.78 | 5.02 | 37.65 | 30.72 | 5.55 |
| | 63 (17.2)†† | 46.43 | 33.96 | 3.46 | 44.39 | 33.12 | 3.76 | 42.25 | 32.25 | 4.12 | 39.98 | 31.32 | 4.54 | 37.53 | 30.33 | 5.00 | 34.88 | 29.26 | 5.53 |
| | 62 (16.7) | 45.90 | 42.13 | 3.46 | 44.13 | 40.89 | 3.76 | 42.23 | 42.23 | 4.12 | 40.37 | 40.37 | 4.54 | 38.35 | 38.35 | 5.01 | 36.12 | 36.12 | 5.54 |
| | 57 (13.9) | 45.51 | 45.51 | 3.45 | 43.89 | 43.89 | 3.76 | 42.17 | 42.17 | 4.12 | 40.32 | 40.32 | 4.54 | 38.30 | 38.30 | 5.01 | 36.08 | 36.08 | 5.53 |
| 1800 | 72 (22.2) | 55.69 | 30.18 | 3.59 | 53.24 | 29.36 | 3.91 | 50.66 | 28.50 | 4.28 | 47.90 | 27.59 | 4.70 | 44.95 | 26.62 | 5.17 | 41.75 | 25.59 | 5.70 |
| | 67 (19.4) | 50.78 | 38.29 | 3.58 | 48.53 | 37.44 | 3.90 | 46.16 | 36.55 | 4.26 | 43.68 | 35.62 | 4.68 | 40.98 | 34.60 | 5.15 | 38.09 | 33.48 | 5.67 |
| | 63 (17.2)†† | 47.22 | 36.66 | 3.58 | 45.11 | 35.80 | 3.89 | 42.89 | 34.90 | 4.25 | 40.54 | 33.94 | 4.66 | 38.03 | 32.91 | 5.13 | 35.33 | 31.77 | 5.65 |
| | 62 (16.7) | 47.61 | 47.61 | 3.58 | 45.85 | 45.85 | 3.89 | 43.99 | 43.99 | 4.25 | 41.98 | 41.98 | 4.67 | 39.82 | 39.82 | 5.14 | 37.43 | 37.43 | 5.67 |
| | 57 (13.9) | 47.54 | 47.54 | 3.58 | 45.79 | 45.79 | 3.89 | 43.93 | 43.93 | 4.25 | 41.93 | 41.93 | 4.67 | 39.76 | 39.76 | 5.14 | 37.38 | 37.38 | 5.67 |

Manufacturer reserves the right to change, at any time, specifications and designs without notice and without obligations.

# DETAILED COOLING CAPACITIES

| EVAPORATOR AIR | | CONDENSER ENTERING AIR TEMPERATURES °F (°C) | | | | | | | | | | | | | | | | | |
|---|---|---|---|---|---|---|---|---|---|---|---|---|---|---|---|---|---|---|---|
| | | 75 (23.9) | | | 85 (29.4) | | | 95 (35) | | | 105 (40.6) | | | 115 (46.1) | | | 125 (51.7) | | |
| CFM | EWB | Capacity MBtuh | | Total Sys. kW** | Capacity MBtuh | | Total Sys. kW** | Capacity MBtuh | | Total Sys. kW** | Capacity MBtuh | | Total Sys. kW** | Capacity MBtuh | | Total Sys. kW** | Capacity MBtuh | | Total Sys. kW** |
| | | Total | Sens‡ | | Total | Sens‡ | | Total | Sens‡ | | Total | Sens‡ | | Total | Sens‡ | | Total | Sens‡ | |
| 24SCB460N0030 Outdoor Section With CVWVA6124XMC* Indoor Section | | | | | | | | | | | | | | | | | | | |
| 1800 | 72 (22.2) | 67.31 | 34.72 | 4.23 | 64.05 | 33.52 | 4.62 | 60.65 | 32.23 | 5.08 | 57.21 | 30.87 | 5.60 | 53.30 | 29.42 | 6.18 | 49.09 | 27.91 | 6.83 |
| | 67 (19.4) | 61.11 | 42.71 | 4.20 | 58.80 | 41.29 | 4.60 | 55.50 | 40.17 | 5.05 | 52.26 | 38.78 | 5.56 | 48.75 | 37.20 | 6.15 | 44.88 | 35.62 | 6.80 |
| | 63 (17.2)†† | 56.68 | 41.19 | 4.18 | 54.40 | 39.82 | 4.57 | 51.47 | 38.70 | 5.02 | 48.47 | 37.27 | 5.53 | 45.19 | 35.74 | 6.11 | 41.62 | 34.01 | 6.76 |
| | 62 (16.7) | 55.62 | 50.35 | 4.18 | 53.08 | 49.09 | 4.56 | 50.52 | 47.91 | 5.01 | 48.10 | 44.25 | 5.53 | 45.71 | 45.84 | 6.12 | 42.28 | 42.28 | 6.77 |
| | 57 (13.9) | 54.39 | 54.39 | 4.17 | 52.57 | 52.57 | 4.56 | 50.12 | 50.12 | 5.01 | 47.19 | 47.19 | 5.51 | 45.17 | 45.17 | 6.11 | 42.19 | 42.19 | 6.77 |
| 2000 | 72 (22.2) | 68.24 | 35.82 | 4.32 | 64.89 | 34.59 | 4.72 | 61.59 | 33.27 | 5.18 | 58.04 | 31.85 | 5.70 | 53.80 | 30.40 | 6.28 | 49.46 | 28.73 | 6.93 |
| | 67 (19.4) | 62.05 | 44.42 | 4.30 | 59.30 | 43.20 | 4.70 | 56.18 | 41.84 | 5.15 | 52.79 | 40.37 | 5.66 | 49.21 | 38.84 | 6.25 | 45.24 | 37.14 | 6.90 |
| | 63 (17.2)†† | 57.57 | 42.78 | 4.28 | 55.01 | 41.58 | 4.67 | 52.14 | 40.25 | 5.12 | 49.05 | 38.77 | 5.63 | 45.57 | 37.20 | 6.21 | 41.97 | 35.50 | 6.87 |
| | 62 (16.7) | 56.53 | 52.71 | 4.28 | 53.95 | 51.52 | 4.67 | 51.65 | 51.12 | 5.12 | 49.59 | 49.78 | 5.64 | 46.26 | 46.26 | 6.23 | 43.14 | 43.14 | 6.88 |
| | 57 (13.9) | 56.01 | 56.01 | 4.28 | 54.04 | 54.04 | 4.67 | 51.66 | 51.66 | 5.12 | 49.06 | 49.06 | 5.64 | 46.24 | 46.24 | 6.22 | 43.14 | 43.14 | 6.88 |
| 2250 | 72 (22.2) | 69.18 | 37.06 | 4.45 | 65.68 | 35.81 | 4.84 | 62.30 | 34.45 | 5.30 | 58.62 | 32.97 | 5.82 | 54.40 | 31.51 | 6.41 | 49.78 | 29.76 | 7.06 |
| | 67 (19.4) | 63.10 | 46.47 | 4.43 | 60.12 | 45.28 | 4.82 | 56.89 | 43.78 | 5.27 | 53.36 | 42.31 | 5.79 | 49.61 | 40.75 | 6.37 | 45.50 | 38.87 | 7.02 |
| | 63 (17.2)†† | 58.44 | 44.65 | 4.41 | 55.77 | 43.41 | 4.80 | 52.78 | 42.04 | 5.24 | 49.56 | 40.56 | 5.76 | 46.04 | 38.93 | 6.34 | 42.20 | 37.06 | 6.99 |
| | 62 (16.7) | 57.39 | 55.65 | 4.40 | 55.86 | 54.50 | 4.80 | 52.98 | 52.98 | 5.25 | 50.47 | 50.47 | 5.77 | 47.44 | 47.44 | 6.36 | 44.15 | 44.15 | 7.01 |
| | 57 (13.9) | 57.74 | 57.74 | 4.41 | 55.59 | 55.59 | 4.80 | 53.12 | 53.12 | 5.25 | 50.41 | 50.41 | 5.77 | 47.36 | 47.36 | 6.35 | 44.11 | 44.11 | 7.01 |

† Total and sensible capacities are net capacities based on 25 feet line set at DOE Appendix M1 test levels.

‡ Sensible capacities shown are based on 80°F (27°C) entering air at the indoor coil. For sensible capacities at other than 80°F (27°C), deduct 835 Btuh (245 kW) per 1000 CFM (480 L/S) of indoor coil air for each degree below 80°F (27°C), or add 835 Btuh (245 kW) per 1000 CFM (480 L/S) of indoor coil air per degree above 80°F (27°C).

# Detailed cooling capacities are based on indoor and outdoor unit at the same elevation per AHRI standard 210/240-2023. If additional tubing length and/or indoor unit is located above outdoor unit, a slight variation in capacity may occur.

** System kw is total of indoor and outdoor unit kilowatts.

†† At TVA rating indoor condition (75°F edb/63°F ewb). All other indoor air temperatures are at 80°F edb.

**NOTE**: When the required data falls between the published data, interpolation may be performed. Extrapolation is not an acceptable practice.

**EWB** — Entering Wet Bulb

Manufacturer reserves the right to change, at any time, specifications and designs without notice and without obligations.

# CONDENSER ONLY RATINGS

| SST °F (°C) | | CONDENSER ENTERING AIR TEMPERATURES °F (°C) | | | | | | |
|---|---|---|---|---|---|---|---|---|
| | | 55.0 (12.8) | 65.0 (18.3) | 75.0 (23.9) | 85.0 (29.4) | 95.0 (35.0) | 105.0 (40.6) | 115.0 (46.1) |
| **24SCB418N0030** | | | | | | | | |
| 30.0 (-1.1) | TCG | 15.10 | 14.10 | 13.10 | 12.20 | 11.30 | 10.40 | 9.50 |
| | SDT | 70.40 | 79.80 | 89.20 | 98.70 | 108.30 | 117.80 | 127.30 |
| | KW | 0.80 | 0.91 | 1.02 | 1.15 | 1.30 | 1.46 | 1.65 |
| 35.0 (1.7) | TCG | 16.60 | 15.60 | 14.60 | 13.60 | 12.70 | 11.70 | 10.60 |
| | SDT | 71.50 | 80.80 | 90.30 | 99.70 | 109.20 | 118.70 | 128.20 |
| | KW | 0.80 | 0.91 | 1.02 | 1.15 | 1.30 | 1.47 | 1.66 |
| 40.0 (4.4) | TCG | 18.30 | 17.20 | 16.10 | 15.10 | 14.10 | 13.00 | 11.90 |
| | SDT | 72.50 | 81.90 | 91.30 | 100.80 | 110.20 | 119.60 | 129.10 |
| | KW | 0.79 | 0.90 | 1.02 | 1.15 | 1.30 | 1.47 | 1.66 |
| 45.0 (7.2) | TCG | 20.00 | 18.80 | 17.80 | 16.70 | 15.60 | 14.50 | 13.30 |
| | SDT | 73.70 | 83.00 | 92.40 | 101.90 | 111.20 | 120.70 | 130.10 |
| | KW | 0.78 | 0.89 | 1.02 | 1.15 | 1.30 | 1.47 | 1.67 |
| 50.0 (10.0) | TCG | 21.80 | 20.70 | 19.50 | 18.40 | 17.30 | 16.10 | 14.80 |
| | SDT | 74.90 | 84.20 | 93.50 | 103.00 | 112.40 | 121.70 | 131.10 |
| | KW | 0.77 | 0.89 | 1.01 | 1.15 | 1.30 | 1.48 | 1.67 |
| 55.0 (12.8) | TCG | 23.80 | 22.60 | 21.40 | 20.20 | 19.00 | 17.70 | 16.40 |
| | SDT | 76.10 | 85.40 | 94.80 | 104.20 | 113.60 | 122.90 | 132.10 |
| | KW | 0.76 | 0.88 | 1.00 | 1.15 | 1.30 | 1.48 | 1.68 |
| **24SCB424N0030** | | | | | | | | |
| 30.0 (-1.1) | TCG | 19.34 | 18.30 | 17.26 | 16.17 | 15.01 | 13.77 | 12.40 |
| | SDT | 73.94 | 83.52 | 93.16 | 102.71 | 112.14 | 121.57 | 130.96 |
| | KW | 0.98 | 1.12 | 1.29 | 1.47 | 1.68 | 1.92 | 2.20 |
| 35.0 (1.7) | TCG | 21.38 | 20.26 | 19.13 | 17.96 | 16.72 | 15.37 | 13.93 |
| | SDT | 75.24 | 84.81 | 94.38 | 103.89 | 113.31 | 122.73 | 132.06 |
| | KW | 0.98 | 1.13 | 1.29 | 1.47 | 1.68 | 1.92 | 2.20 |
| 40.0 (4.4) | TCG | 23.58 | 22.37 | 21.16 | 19.90 | 18.57 | 17.13 | 15.58 |
| | SDT | 76.62 | 86.14 | 95.61 | 105.11 | 114.51 | 123.92 | 133.17 |
| | KW | 0.98 | 1.13 | 1.29 | 1.47 | 1.68 | 1.92 | 2.20 |
| 45.0 (7.2) | TCG | 25.95 | 24.65 | 23.35 | 22.00 | 20.56 | 19.03 | 17.39 |
| | SDT | 78.08 | 87.51 | 96.97 | 106.34 | 115.79 | 125.11 | 134.39 |
| | KW | 0.98 | 1.13 | 1.29 | 1.47 | 1.68 | 1.92 | 2.19 |
| 50.0 (10.0) | TCG | 28.48 | 27.09 | 25.69 | 24.26 | 22.72 | 21.08 | 19.32 |
| | SDT | 79.73 | 89.10 | 98.46 | 107.57 | 116.94 | 126.28 | 135.58 |
| | KW | 0.98 | 1.13 | 1.28 | 1.46 | 1.67 | 1.91 | 2.19 |
| 55.0 (12.8) | TCG | 31.22 | 29.72 | 28.21 | 26.66 | 25.02 | 23.26 | 21.38 |
| | SDT | 81.37 | 90.71 | 100.00 | 109.14 | 118.21 | 127.54 | 136.81 |
| | KW | 0.98 | 1.12 | 1.28 | 1.45 | 1.65 | 1.89 | 2.17 |
| **24SCB430N0030** | | | | | | | | |
| 30.0 (-1.1) | TCG | 23.36 | 22.09 | 20.86 | 19.60 | 18.26 | 16.80 | 15.18 |
| | SDT | 77.76 | 87.66 | 97.65 | 107.75 | 117.95 | 128.31 | 138.89 |
| | KW | 1.20 | 1.35 | 1.53 | 1.74 | 1.99 | 2.28 | 2.64 |
| 35.0 (1.7) | TCG | 25.77 | 24.41 | 23.07 | 21.70 | 20.25 | 18.65 | 16.96 |
| | SDT | 79.48 | 89.29 | 99.26 | 109.32 | 119.51 | 129.88 | 140.34 |
| | KW | 1.21 | 1.36 | 1.54 | 1.75 | 2.01 | 2.31 | 2.67 |
| 40.0 (4.4) | TCG | 28.37 | 26.91 | 25.46 | 23.98 | 22.39 | 20.67 | 18.83 |
| | SDT | 81.25 | 91.02 | 100.97 | 110.97 | 121.09 | 131.37 | 141.69 |
| | KW | 1.22 | 1.37 | 1.55 | 1.77 | 2.02 | 2.33 | 2.69 |
| 45.0 (7.2) | TCG | 31.18 | 29.61 | 28.04 | 26.43 | 24.70 | 22.83 | 20.81 |
| | SDT | 83.07 | 92.90 | 102.76 | 112.64 | 122.70 | 132.94 | 143.15 |
| | KW | 1.23 | 1.38 | 1.56 | 1.78 | 2.04 | 2.35 | 2.72 |
| 50.0 (10.0) | TCG | 34.21 | 32.51 | 30.81 | 29.05 | 27.19 | 25.16 | 22.98 |
| | SDT | 85.18 | 94.87 | 104.65 | 114.51 | 124.32 | 134.42 | 144.49 |
| | KW | 1.24 | 1.39 | 1.57 | 1.80 | 2.06 | 2.37 | 2.74 |
| 55.0 (12.8) | TCG | 37.46 | 35.63 | 33.78 | 31.87 | 29.86 | 27.66 | 25.32 |
| | SDT | 87.34 | 96.88 | 106.60 | 116.34 | 125.94 | 135.92 | 145.81 |
| | KW | 1.24 | 1.40 | 1.58 | 1.81 | 2.07 | 2.39 | 2.75 |

**Manufacturer reserves the right to change, at any time, specifications and designs without notice and without obligations.**

# CONDENSER ONLY RATINGS (Continued)

| SST °F (°C) | | CONDENSER ENTERING AIR TEMPERATURES °F (°C) | | | | | | |
|---|---|---|---|---|---|---|---|---|
| | | 55.0 (12.8) | 65.0 (18.3) | 75.0 (23.9) | 85.0 (29.4) | 95.0 (35.0) | 105.0 (40.6) | 115.0 (46.1) |
| **24SCB436N0030** | | | | | | | | |
| 30.0 (-1.1) | TCG | 30.00 | 28.36 | 26.78 | 25.19 | 23.53 | 21.80 | 19.97 |
| | SDT | 75.41 | 84.88 | 94.32 | 103.73 | 113.17 | 122.50 | 131.71 |
| | KW | 1.39 | 1.66 | 1.90 | 2.14 | 2.39 | 2.66 | 2.98 |
| 35.0 (1.7) | TCG | 33.10 | 31.32 | 29.60 | 27.86 | 26.04 | 24.12 | 22.12 |
| | SDT | 76.81 | 86.28 | 95.69 | 105.00 | 114.37 | 123.69 | 132.82 |
| | KW | 1.41 | 1.68 | 1.92 | 2.16 | 2.41 | 2.70 | 3.03 |
| 40.0 (4.4) | TCG | 36.40 | 34.50 | 32.61 | 30.66 | 28.71 | 26.61 | 24.41 |
| | SDT | 78.36 | 87.68 | 97.07 | 106.39 | 115.63 | 124.86 | 133.91 |
| | KW | 1.43 | 1.69 | 1.93 | 2.17 | 2.43 | 2.73 | 3.07 |
| 45.0 (7.2) | TCG | 39.90 | 37.87 | 35.82 | 33.74 | 31.53 | 29.24 | 26.79 |
| | SDT | 80.19 | 89.25 | 98.51 | 107.73 | 116.97 | 126.07 | 135.21 |
| | KW | 1.46 | 1.70 | 1.94 | 2.18 | 2.45 | 2.75 | 3.12 |
| 50.0 (10.0) | TCG | 43.65 | 41.42 | 39.21 | 36.90 | 34.51 | 32.00 | 29.36 |
| | SDT | 81.93 | 91.11 | 99.94 | 109.21 | 118.32 | 127.31 | 136.24 |
| | KW | 1.47 | 1.72 | 1.94 | 2.19 | 2.46 | 2.77 | 3.14 |
| 55.0 (12.8) | TCG | 47.55 | 45.19 | 42.78 | 40.26 | 37.63 | 34.90 | 32.03 |
| | SDT | 84.02 | 92.82 | 101.95 | 110.58 | 119.68 | 128.54 | 137.29 |
| | KW | 1.48 | 1.72 | 1.95 | 2.19 | 2.47 | 2.78 | 3.15 |
| **24SCB442N0030** | | | | | | | | |
| 30.0 (-1.1) | TCG | 33.37 | 31.78 | 30.15 | 28.45 | 26.69 | 24.84 | 22.89 |
| | SDT | 69.65 | 79.17 | 88.69 | 98.22 | 107.73 | 117.17 | 126.59 |
| | KW | 1.86 | 2.07 | 2.31 | 2.58 | 2.87 | 3.21 | 3.58 |
| 35.0 (1.7) | TCG | 36.81 | 35.06 | 33.26 | 31.40 | 29.46 | 27.44 | 25.34 |
| | SDT | 70.90 | 80.29 | 89.76 | 99.21 | 108.68 | 118.11 | 127.43 |
| | KW | 1.87 | 2.08 | 2.32 | 2.59 | 2.89 | 3.22 | 3.60 |
| 40.0 (4.4) | TCG | 40.55 | 38.61 | 36.62 | 34.56 | 32.45 | 30.26 | 27.97 |
| | SDT | 72.12 | 81.47 | 90.89 | 100.36 | 109.73 | 119.04 | 128.37 |
| | KW | 1.88 | 2.09 | 2.33 | 2.60 | 2.90 | 3.24 | 3.62 |
| 45.0 (7.2) | TCG | 44.61 | 42.45 | 40.25 | 37.99 | 35.72 | 33.31 | 30.81 |
| | SDT | 73.45 | 82.79 | 92.17 | 101.54 | 110.71 | 120.07 | 129.36 |
| | KW | 1.88 | 2.10 | 2.34 | 2.61 | 2.91 | 3.26 | 3.64 |
| 50.0 (10.0) | TCG | 49.00 | 46.61 | 44.20 | 41.72 | 39.18 | 36.60 | 33.89 |
| | SDT | 74.85 | 84.11 | 93.40 | 102.71 | 112.06 | 121.16 | 130.34 |
| | KW | 1.89 | 2.10 | 2.35 | 2.62 | 2.93 | 3.27 | 3.66 |
| 55.0 (12.8) | TCG | 53.74 | 51.14 | 48.46 | 45.75 | 42.97 | 40.14 | 37.20 |
| | SDT | 76.40 | 85.41 | 94.76 | 104.00 | 113.27 | 122.31 | 131.40 |
| | KW | 1.89 | 2.11 | 2.35 | 2.63 | 2.94 | 3.29 | 3.68 |
| **24SCB448N0030** | | | | | | | | |
| 30.0 (-1.1) | TCG | 38.05 | 36.11 | 34.19 | 32.26 | 30.26 | 28.17 | 25.97 |
| | SDT | 70.62 | 79.92 | 89.27 | 98.66 | 108.06 | 117.49 | 126.92 |
| | KW | 2.25 | 2.45 | 2.70 | 3.00 | 3.34 | 3.75 | 4.21 |
| 35.0 (1.7) | TCG | 41.87 | 39.78 | 37.70 | 35.60 | 33.43 | 31.17 | 28.79 |
| | SDT | 72.00 | 81.22 | 90.51 | 99.85 | 109.22 | 118.60 | 127.96 |
| | KW | 2.26 | 2.46 | 2.72 | 3.02 | 3.37 | 3.77 | 4.24 |
| 40.0 (4.4) | TCG | 46.02 | 43.75 | 41.49 | 39.20 | 36.85 | 34.40 | 31.71 |
| | SDT | 73.48 | 82.63 | 91.89 | 101.17 | 110.47 | 119.77 | 129.03 |
| | KW | 2.26 | 2.47 | 2.73 | 3.04 | 3.39 | 3.80 | 4.27 |
| 45.0 (7.2) | TCG | 50.50 | 48.04 | 45.58 | 43.10 | 40.54 | 37.88 | 35.10 |
| | SDT | 75.10 | 84.21 | 93.39 | 102.59 | 111.81 | 121.04 | 130.22 |
| | KW | 2.27 | 2.48 | 2.75 | 3.06 | 3.42 | 3.83 | 4.30 |
| 50.0 (10.0) | TCG | 55.39 | 52.67 | 50.00 | 47.30 | 44.52 | 41.64 | 38.62 |
| | SDT | 76.95 | 85.90 | 94.99 | 104.12 | 113.25 | 122.35 | 131.43 |
| | KW | 2.27 | 2.49 | 2.76 | 3.08 | 3.45 | 3.86 | 4.34 |
| 55.0 (12.8) | TCG | 60.58 | 57.73 | 54.77 | 51.83 | 48.81 | 45.68 | 42.41 |
| | SDT | 78.82 | 87.79 | 96.72 | 105.73 | 114.73 | 123.74 | 132.72 |
| | KW | 2.27 | 2.51 | 2.78 | 3.10 | 3.47 | 3.89 | 4.37 |

**Manufacturer reserves the right to change, at any time, specifications and designs without notice and without obligations.**

# CONDENSER ONLY RATINGS (Continued)

| SST °F (°C) | | CONDENSER ENTERING AIR TEMPERATURES °F (°C) | | | | | | |
|---|---|---|---|---|---|---|---|---|
| | | 55.0 (12.8) | 65.0 (18.3) | 75.0 (23.9) | 85.0 (29.4) | 95.0 (35.0) | 105.0 (40.6) | 115.0 (46.1) |
| **24SCB460N0030** | | | | | | | | |
| 30.0 (-1.1) | TCG | 48.86 | 46.38 | 43.92 | 41.41 | 38.79 | 36.02 | 33.09 |
| | SDT | 71.15 | 80.38 | 89.65 | 98.97 | 108.25 | 117.49 | 126.66 |
| | KW | 2.73 | 2.99 | 3.30 | 3.67 | 4.10 | 4.59 | 5.16 |
| 35.0 (1.7) | TCG | 53.79 | 51.10 | 48.43 | 45.70 | 42.85 | 39.87 | 36.67 |
| | SDT | 72.64 | 81.80 | 91.01 | 100.26 | 109.46 | 118.64 | 127.76 |
| | KW | 2.75 | 3.01 | 3.33 | 3.70 | 4.14 | 4.64 | 5.21 |
| 40.0 (4.4) | TCG | 59.10 | 56.19 | 53.28 | 50.30 | 47.20 | 43.95 | 40.47 |
| | SDT | 74.25 | 83.34 | 92.49 | 101.64 | 110.78 | 119.88 | 128.91 |
| | KW | 2.77 | 3.04 | 3.36 | 3.74 | 4.18 | 4.69 | 5.27 |
| 45.0 (7.2) | TCG | 64.80 | 61.64 | 58.47 | 55.23 | 51.85 | 48.30 | 44.54 |
| | SDT | 75.99 | 84.99 | 94.06 | 103.14 | 112.20 | 121.20 | 130.14 |
| | KW | 2.78 | 3.06 | 3.39 | 3.78 | 4.23 | 4.74 | 5.32 |
| 50.0 (10.0) | TCG | 70.91 | 67.48 | 64.02 | 60.48 | 56.80 | 52.92 | 48.82 |
| | SDT | 77.86 | 86.77 | 95.77 | 104.76 | 113.70 | 122.61 | 131.43 |
| | KW | 2.79 | 3.08 | 3.42 | 3.81 | 4.27 | 4.79 | 5.37 |
| 55.0 (12.8) | TCG | 77.45 | 73.70 | 69.92 | 66.05 | 62.03 | 57.81 | 53.36 |
| | SDT | 79.90 | 88.70 | 97.59 | 106.47 | 115.30 | 124.08 | 132.77 |
| | KW | 2.81 | 3.10 | 3.44 | 3.85 | 4.31 | 4.83 | 5.42 |

**KW** - Outdoor Unit Kilowatts Only.
**SDT** -Saturated Temperature Leaving Compressor (°F)
**SST** -Saturated Temperature Entering Compressor (°F/°C)
**TCG** -Gross Cooling Capacity (1000 Btuh)

# GUIDE SPECIFICATIONS

## Air-cooled, split-system air conditioner 24SCB4 1-1/2 to 5 nominal tons

## GENERAL

**System Description**

Outdoor-mounted, air-cooled, split-system air conditioner unit suitable for ground or rooftop installation. Unit consists of a hermetic compressor, an air-cooled coil, propeller-type condenser fan, and a control box. Unit will discharge supply air upward as shown on contract drawings. Unit will be used in a refrigeration circuit to match up to a packaged fan coil or coil unit.

**Quality Assurance**

- Unit will be rated in accordance with the latest edition of AHRI Standard 210/240.
- Unit will be certified for capacity and efficiency, and listed in AHRI directory.
- Unit construction will comply with latest edition of ANSI/ ASHRAE and with NEC.
- Unit will be constructed in accordance with UL standards and will carry the UL label of approval. Unit will have c-UL-us approval.
- Unit cabinet will be capable of withstanding Federal Test Method Standard No. 141 (Method 6061) 500-hr salt spray test.
- Air-cooled condenser coils will be leak tested at 150 psig and pressure tested at 470 psig.
- Unit constructed in ISO9001 approved facility.

**Delivery, Storage, and Handling**

- Unit will be shipped as single package only and is stored and handled per unit manufacturer's recommendations.

**Warranty (for inclusion by specifying engineer)**

- U.S. and Canada only.

## PRODUCTS

**Equipment**

Factory assembled, single piece, air-cooled air conditioner unit. Contained within the unit enclosure is all factory wiring, piping, controls, compressor, refrigerant charge Puron® (R-410A), and special features required prior to field start-up.

**Unit Cabinet**

- Unit cabinet will be constructed of galvanized steel, bonderized, and coated with a powder coat paint.

**Fans**

- Condenser fan will be direct-drive propeller type, discharging air upward.
- Condenser fan motors will be totally enclosed, 1-phase type with class B insulation and permanently lubricated bearings. Shafts will be corrosion resistant.
- Fan blades will be statically and dynamically balanced.
- Condenser fan openings will be equipped with coated steel wire safety guards.

**Compressor**

- Compressor will be hermetically sealed.
- Compressor will be mounted on rubber vibration isolators.

**Condenser Coil**

- Condenser coil will be air cooled.
- Coil will be constructed of aluminum fins mechanically bonded to copper or aluminum tubes which are then cleaned, dehydrated, and sealed.

**Refrigeration Components**

- Refrigeration circuit components will include liquid-line shutoff valve with sweat connections, vapor-line shutoff valve with sweat connections, system charge of Puron (R-410A) refrigerant, and compressor oil.
- Unit will be shipped with filter drier for Puron (R-410A) refrigerant.

Operating Characteristics

- The capacity of the unit will meet or exceed _____ Btuh at a suction temperature of _____ °F/°C. The power consumption at full load will not exceed _____ kW.
- Combination of the unit and the evaporator or fan coil unit will have a total net cooling capacity of _____ Btuh or greater at conditions of _____ CFM entering air temperature at the evaporator at _____ °F/°C wet bulb and _____ °F/°C dry bulb, and air entering the unit at _____ °F/°C.
- The system will have a SEER2 of _____ Btuh/watt or greater at DOE conditions.

Electrical Requirements

- Nominal unit electrical characteristics will be _____ v, single phase, 60 Hz. The unit will be capable of satisfactory operation within voltage limits of _____ v to _____ v.
- Nominal unit electrical characteristics will be _____ v, three phase, 60 Hz. The unit will be capable of satisfactory operation within voltage limits of _____ v to _____ v.
- Unit electrical power will be single point connection.
- Control circuit will be 24v.

Special Features

- Refer to section of this literature identifying accessories and descriptions for specific features and available enhancements.

© 2025 Carrier. All rights reserved.


**Manufacturer reserves the right to change, at any time, specifications and designs without notice and without obligations.**