38MGR
Multi−zone Outdoor Unit Ductless System
Sizes 18, 24, 30, 36 and 48

Carrier
turn to the experts

Product Data

Fig. 1 − 18K

Fig. 2 − 24K and 30K

Fig. 3 − 36K and 48K

NOTE: Images for illustration purposes only. Actual models may be slightly different.

INDUSTRY LEADING FEATURES / BENEFITS

A competitively priced and creative solution to design problems.

The 38MGR ductless inverter driven multi−zone system provides individual comfort control for up to 5 separate zones. Two, three, four or five space−saving High Wall, Cassette, Slim Ducted or Floor Console fan coils can be matched with one outdoor heat pump. The indoor fan coils are connected to the outdoor unit by refrigerant tubing and wires.

The different styles of indoor units can be mounted in several locations to accommodate the application. This selection of fan coils permits inexpensive and creative solutions to design problems such as:

- When adding air conditioning to spaces that are heated by hydronic or electric heat and have no ductwork.
- Historical renovations or any application where preserving the look of the original structure is essential.
- Commercial add−on jobs where the existing air conditioning system cannot be stretched.

These compact indoor fan coil units take up very little space in the room and do not obstruct windows. The fan coils are attractively styled to blend with most room decors.

Advanced system components incorporate innovative technology to provide reliable cooling and heating performance at low sound levels.

Inverter Technology

The inverter driven compressor is designed to run at various input power frequencies (Hz) which controls the compressor's motor speed.

Even Temperature – The control package, including the inverter, monitors the outdoor and indoor temperatures as they relate to the selected indoor set point and adjusts the compressor speed to match the load and keep the system operating continuously rather than cycling and creating temperature swings. This translates to higher comfort levels for the occupants.

Rapid Pull Down/Warm−Up – Comfort is increased by the inverter system's ability to ramp up the compressor speed enabling the system to reach the user selected room temperature set point quicker.

Humidity Control – Running the system for longer periods and continuously varying the compressor speed enhances the humidity control.

Individual Room Comfort

Maximum comfort is provided because each space can be controlled individually based on the usage pattern.

Low Sound Levels

When noise is a concern, ductless systems are the answer. The indoor units are whisper quiet. There are no compressors indoors, either in the conditioned space or directly over it, and there is none of the noise usually generated by air being forced through the ductwork.

When sound ordinances and proximity to neighbors demand quiet operation, the 38MGR unit is the right choice. With the inverter technology, these units run at lower speeds most of the time resulting in reduced sound levels.

Inverter Technology – Enhanced Economical Operation

Ductless systems are inherently economical to operate. Individual rooms are heated or cooled only when required, and since the air is delivered directly to the space, there is no need to use additional energy to move the air in the ductwork. This economical operation is enhanced further when the inverter system output matches the load resulting in a more efficient system.

Easy−To−Use Controls

The multi−zone systems have microprocessor−based controls to provide the ultimate in comfort and efficiency. The user friendly wired and wireless remote controls provide the interface between the user and the unit.

Secure Operation

If security is an issue, outdoor and indoor units are connected only by refrigerant piping and wiring to prevent intruders from crawling through ductwork or wall openings. In addition, since the 38MGR can be installed close to an outside wall, coils are protected from vandals and severe weather.

Fast Installation

This compact ductless system is simple to install. A mounting bracket is included with the indoor units and only wires and piping need to run between the indoor and outdoor units. These units are fast and easy to install ensuring minimal disruption to customers in homes or the workplace. This makes the 38MGR systems the equipment of choice for retrofit applications.

Simple Servicing and Maintenance

Removing the top panel of the outdoor unit provides immediate access to the control compartment, providing the service technician access to the diagnostic LEDs to facilitate the troubleshooting process. In addition, the draw−thru design of the outdoor unit means that dirt accumulates on the outside surface of the coil. Coils can be cleaned quickly from the inside using a pressure hose and detergent.

On the indoor units, service and maintenance expense is reduced due to the permanent easy to clean filters. Also, error codes are displayed on the front panel to alert the user to certain system malfunctions

Built−in Reliability

Ductless system indoor and outdoor units are designed to provide years of trouble−free operation.

Both the indoor and outdoor units are well protected. Whenever the microprocessor detects abnormal conditions, the unit stops and an error code appears.

Inverter systems provide additional reliability due to the soft start. This refers to the ability of the inverter to start the compressor motor using reduced voltage and reduced current. This feature is beneficial from an electrical standpoint (eliminates current spikes) as well as an overall reliability standpoint due to reduced stress on all associated system components.

Agency Listings

All systems are listed with AHRI (Air conditioning, Heating, and Refrigeration Institute) and are ETL certified per UL 1995 standard.

MODEL NUMBER NOMENCLATURE

OUTDOOR UNIT

38 MG R Q 18 B – – 3

38 = OUTDOOR UNIT

MG = ALL

UNIT TYPE
R = OUTDOOR UNIT

SYSTEM TYPE
Q = HEAT PUMP

NOMINAL CAPACITY
18 – 1 1/2 TONS
24 – 2 TONS
30 – 2 1/2 TONS
36 – 3 TONS
48 – 4 TONS

VOLTAGE
3 = 208/230–1–60

NOT USED

MAXIMUM NUMBER OF FAN COIL UNITS THAT CAN BE CONNECTED TO THE OUTDOOR UNIT

B = 1:2
C = 1:3
D = 1:4
E = 1:5

Use of the AHRI Certified TM Mark indicates a manufacturer's participation in the program For verification of certification for individual products, go to www.ahridirectory.org.

STANDARD FEATURES AND ACCESSORIES

Ease of Installation	
Low Voltage Controls	S
Comfort Features	
Microprocessor Control	S
Auto Restart Function	S
Auto Changeover	S
Low Ambient Cooling	S
Low Ambient Heating	S
Energy Saving Features	
Inverter Driven Compressor	S
46° F Heating Mode (Heating Setback)	S
Safety And Reliability	
3 Minute Time Delay For Compressor	S
High Compressor Discharge Temperature	S
Low Voltage Protection	S
Compressor Overload Protection	S
Compressor Over Current Protection	S
IPM Module Protection	S
Aluminum Blue Hydrophilic pre−coated fins	S
Ease of Service	
Diagnostic	S
Error Messages Displayed On Front Panel	S
Application Flexibility	
Crankcase Heater	S
Basepan Heater	S

Legend
S Standard
A Accessory

Accessories

Outdoor Unit Model Number	Basepan Base Rubber Plugs RCD Part Number	Quantity per unit
38MGRQ18B−−3	12600801A00077	25
38MGRQ24C−−3 38MGRQ30D−−3	12600801A00117	5
38MGRQ36D−−3 38MGRQ48E−−3	12600801A00118	5

NOTE: Basepan built in with multiple holes for proper draining during defrost. For applications where is required to seal these holes, and re−direct the condensate drain, rubber plugs are available through RCD.

Outdoor Units

Crankcase Heater

The crankcase heater is standard on all unit sizes. Heater clamps must be placed around the compressor oil stump.

Base pan Heater

The base pan heater is standard on all unit sizes.

DIMENSIONS − OUTDOOR

UNIT SIZE		18	24	30	36	48
Height	in (mm)	27.6 (703)	31.89 (810)	31.89 (810)	52.48 (1333)	52.48 (1333)
Width	in (mm)	33.27 (845)	37.24 (946)	37.24 (946)	41.14 (1045)	41.14 (1045)
Depth	in (mm)	13.19 (335)	15.20 (386)	15.20 (386)	14.96 (380)	14.96 (380)
Weight−Net	lbs (kg)	105.8 (48)	149.9 (68)	156.5 (71)	223.8 (101.5)	223.8 (101.5)

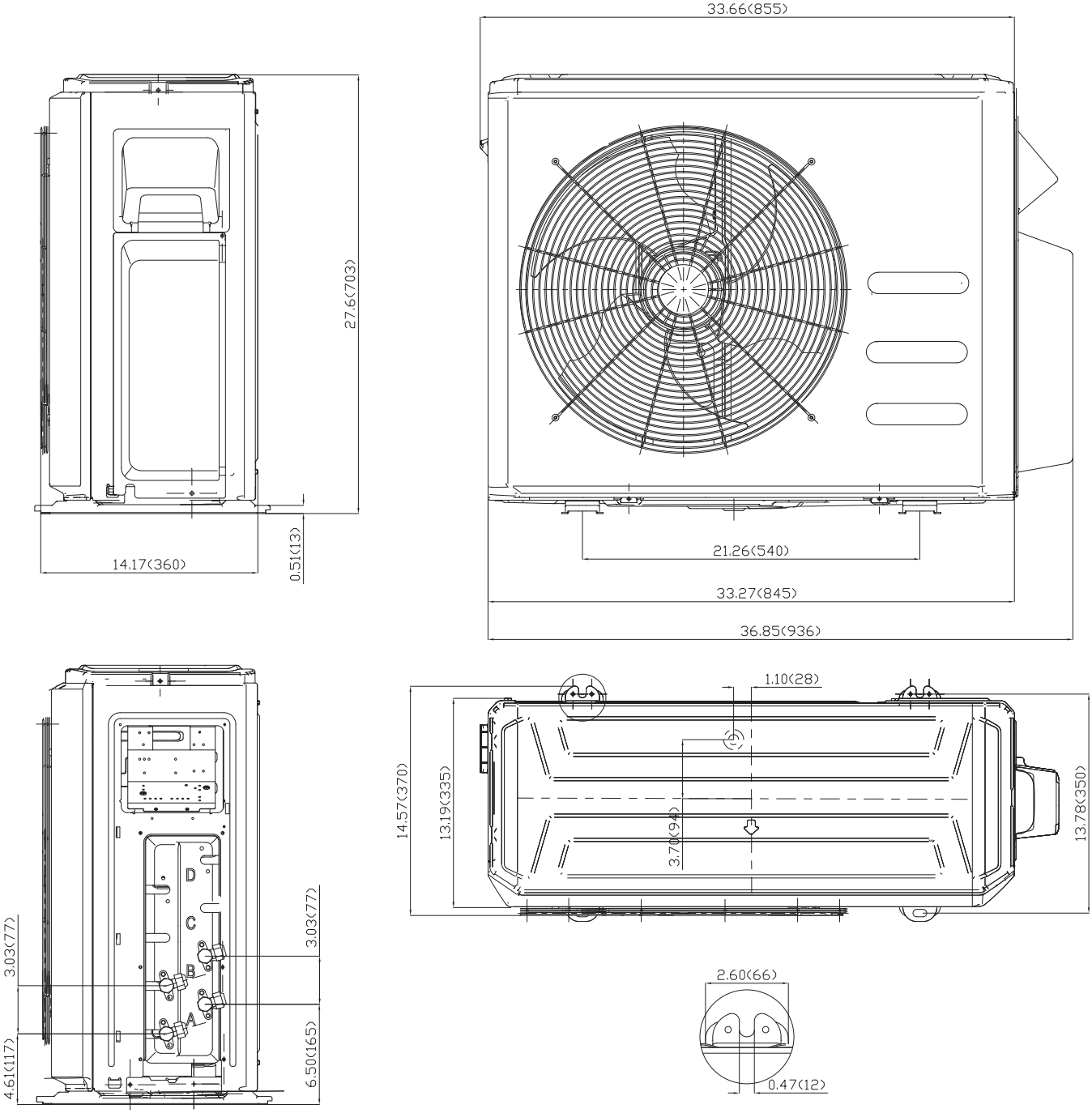

Fig. 4 − Outdoor Dimensions Size 18

NOTE: **Master valves are not available on the size 18 unit.**

DIMENSIONS − OUTDOOR (CONTINUED)

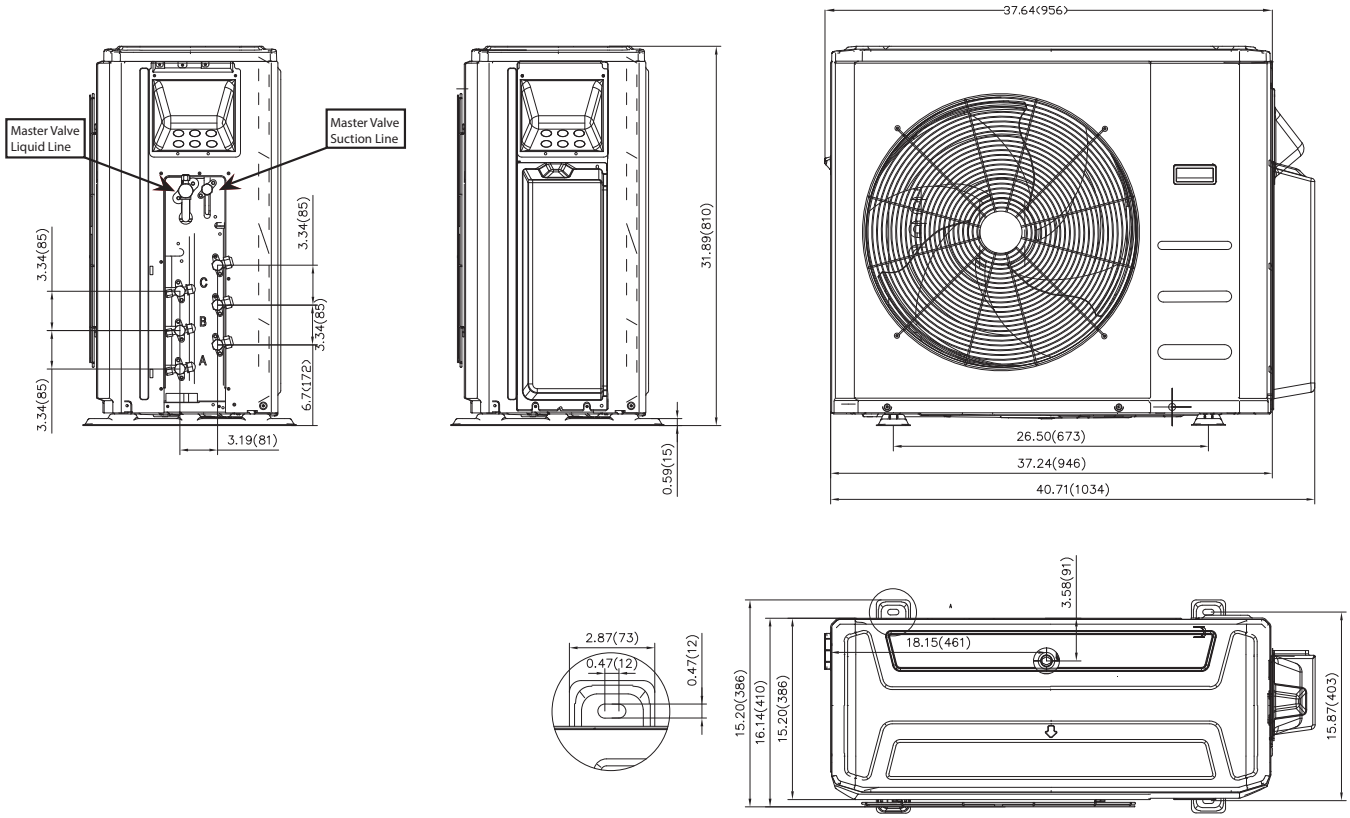

Fig. 5 − Outdoor Dimensions Size 24

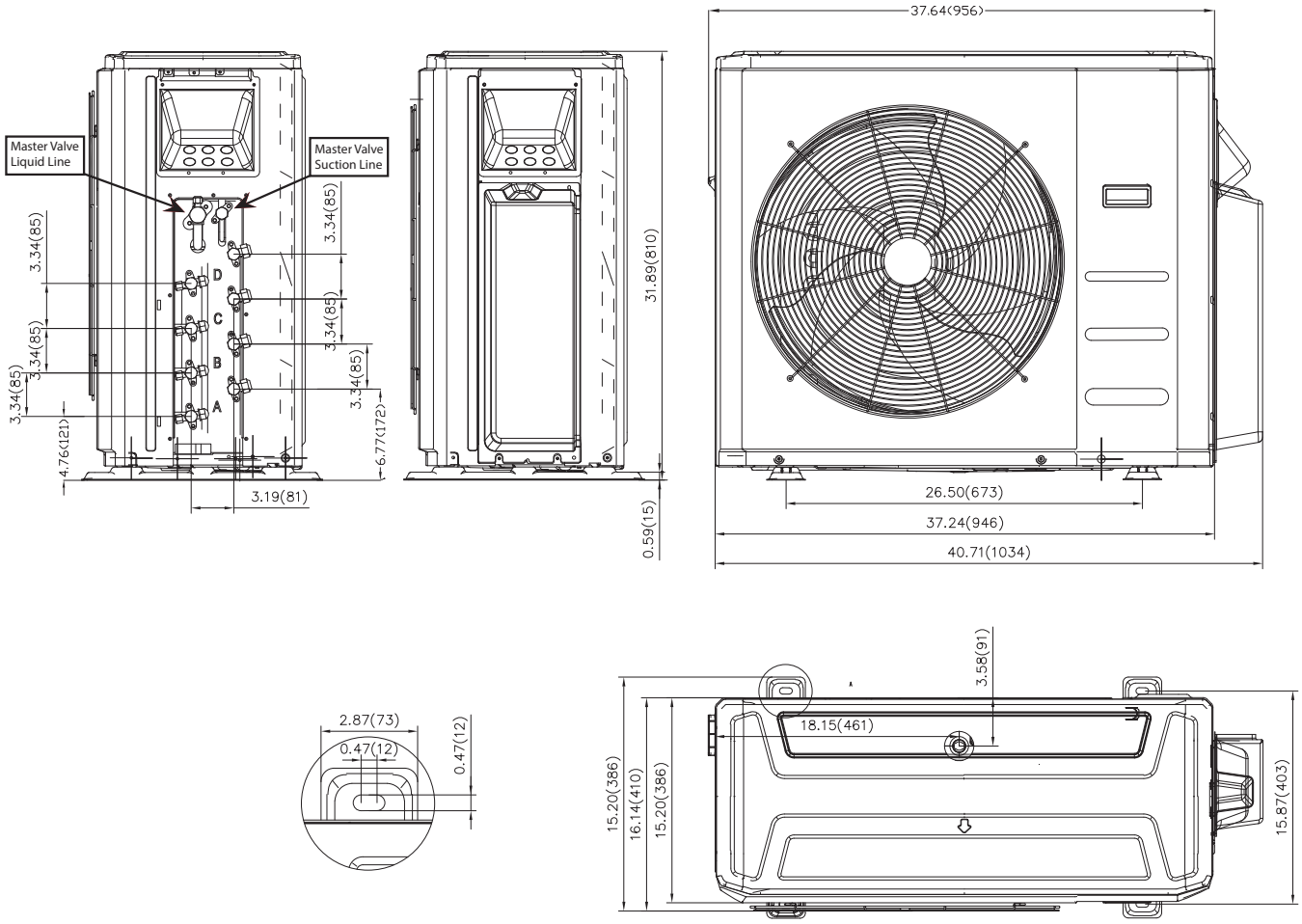

Fig. 6 − Outdoor Dimensions Size 30

DIMENSIONS − OUTDOOR (CONTINUED)

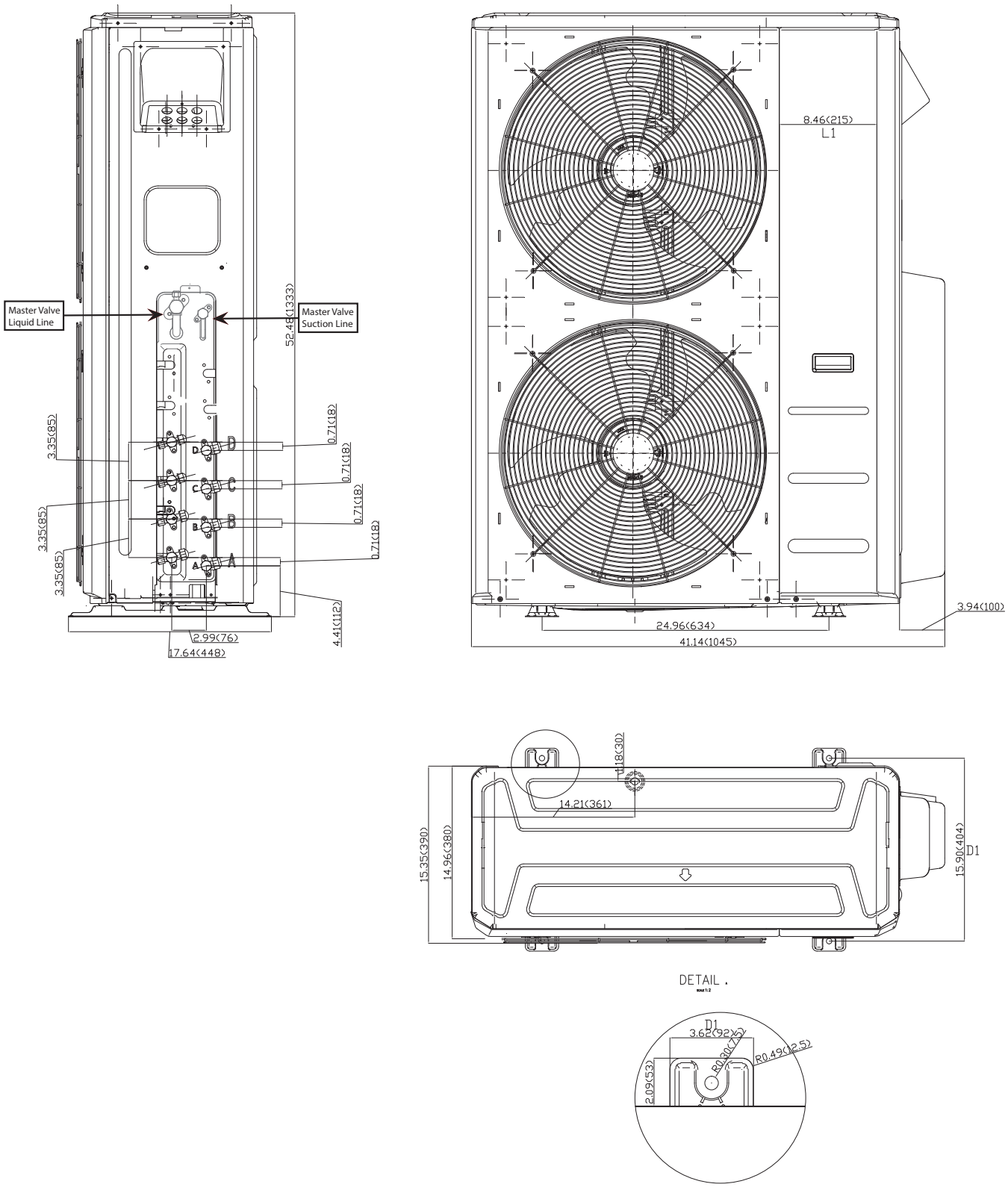

Fig. 7 − Outdoor Dimensions Size 36

DIMENSIONS − OUTDOOR (CONTINUED)

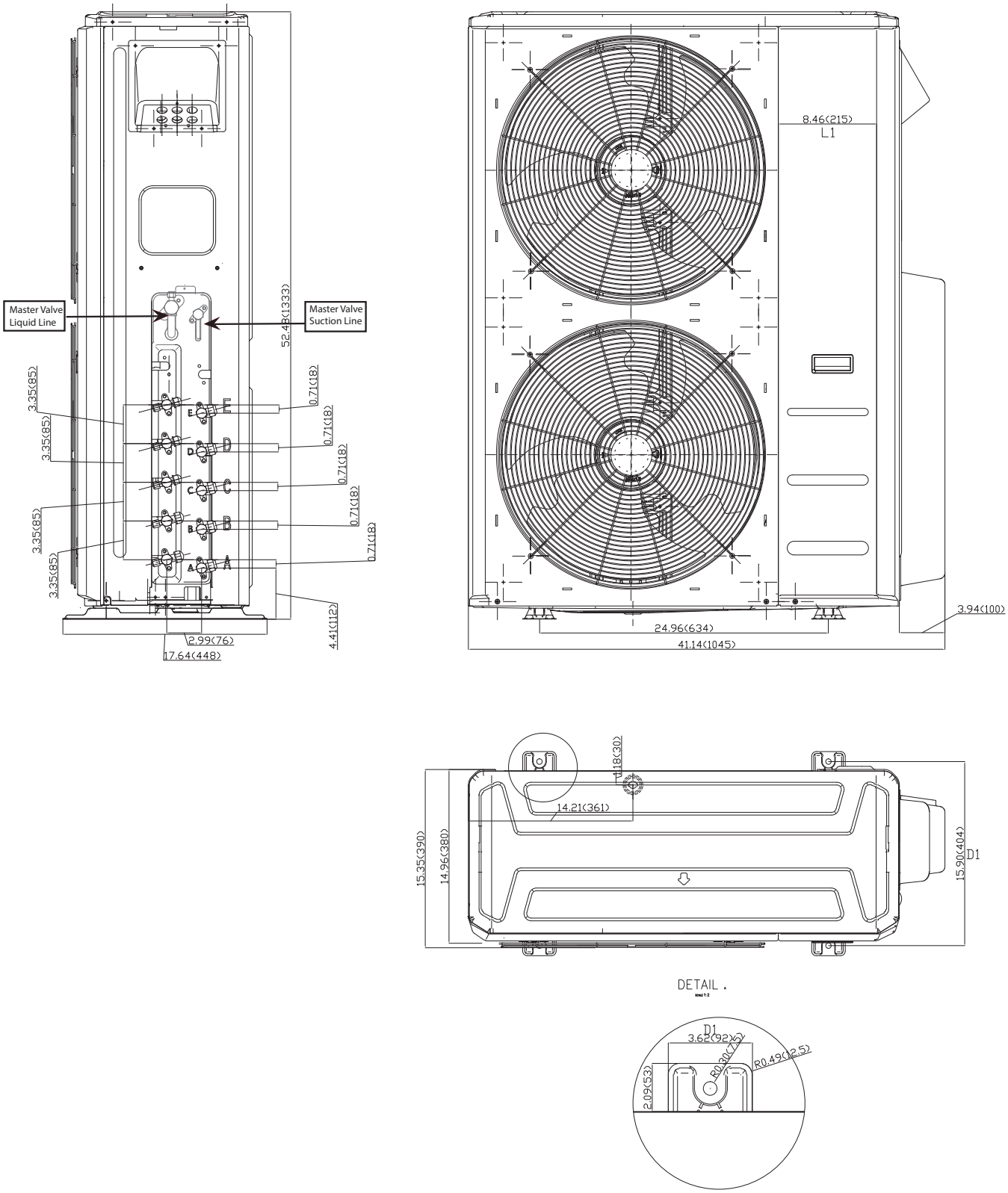

Fig. 8 − Outdoor Dimensions Size 48

CLEARANCES − OUTDOOR

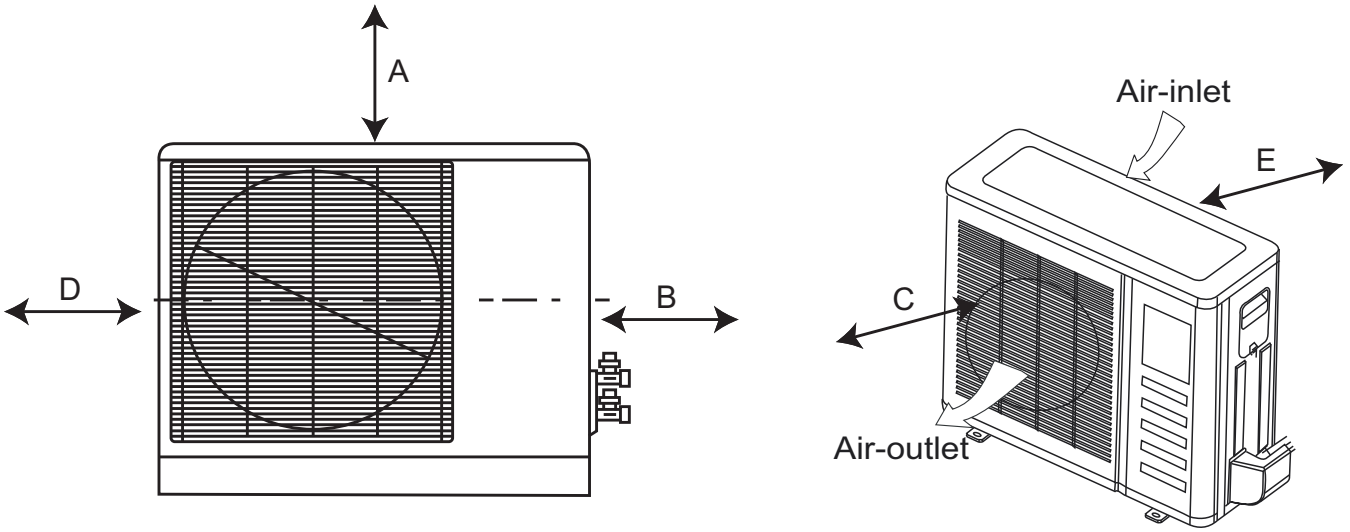

Fig. 9 − Clearances Outdoor

UNIT	MINIMUM VALUE — in. (mm)
A	24 (609)
B	24 (609)
C	24 (609)
D	4 (101)
E	6 (152)

NOTE: Outdoor Unit must be mounted at least 2in (50mm) above the maximum anticipated snow depth.

CLEARANCES − OUTDOOR (CONT)

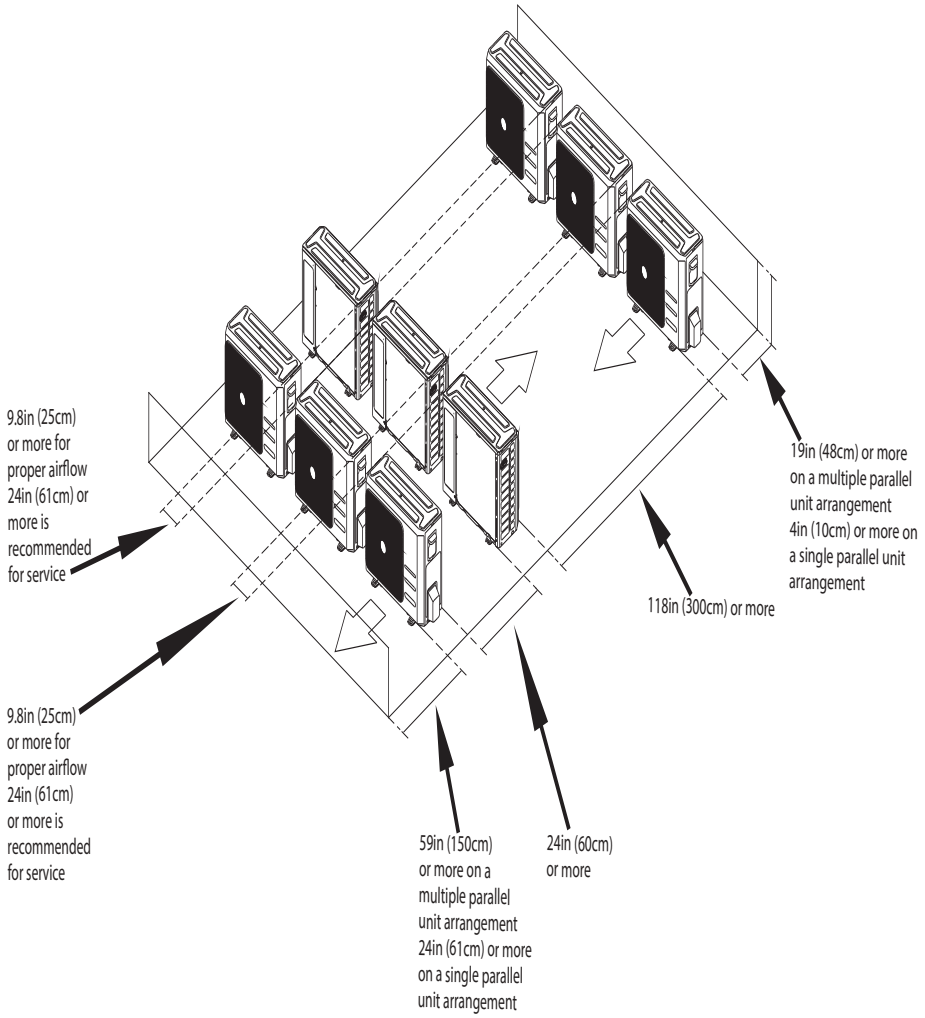

Fig. 10 − Clearances for multiple units

COMPATIBILITY TABLE

	INDOOR UNIT	OUTDOOR UNIT				
		38MGRQ18B−−3	38MGRQ24C−−3	38MGRQ30D−−3	38MGRQ36D−−3	38MGRQ48E−−3
High Wall	40MAQB09B−−3	•	•	•	•	•
	40MAQB12B−−3	•	•	•	•	•
	40MAQB18B−−3		•	•	•	•
	40MAQB24B−−3			•	•	•
	40MHHQ09−−−3	•	•	•	•	•
	40MHHQ12−−−3	•	•	•	•	•
	40MHHQ18−−−3		•	•	•	•
	40MHHQ24−−−3			•	•	•
Cassette	40MBCQ09−−−3	•	•	•	•	•
	40MBCQ12−−−3	•	•	•	•	•
	40MBCQ18−−−3		•	•	•	•
	40MBQB09D−−3	•	•	•	•	•
	40MBQB12D−−3	•	•	•	•	•
	40MBDQ18−−−3		•	•	•	•
	40MBDQ24−−−3			•	•	•
	40MBFQ09−−−3	•	•	•	•	•
	40MBFQ12−−−3	•	•	•	•	•

NOTE: Backward compatible with 40MBQB*C Cassette, 40MBQB*D Ducted, 40MBQB*F Floor Console Systems.

PHYSICAL DATA − OUTDOOR

HEAT PUMP							
System	Size		**18**	**24**	**30**	**36**	**48**
	Outdoor Model		38MGRQ18B−−3	38MGRQ24C−−3	38MGRQ30D−−3	38MGRQ36D−−3	38MGRQ48E−−3
	Max Number of Zones		2	3	4	4	5
Performance Non−Ducted	Energy Star		YES	YES	YES	YES	YES
	Cooling System Tons		1.5	2.0	2.5	3.0	4.0
	Cooling Rated Capacity	Btu/h	18,000	24,000	30,000	36,000	48,000
	Cooling Cap. Range Min − Max	Btu/h	5810~21940	7880~33510	8090~41470	8560~45020	8560~53160
	SEER		22.5	23	23.8	21.5	22.4
	EER		12.5	12.5	12.5	13.5	12.5
	Heating Rated Capacity (47° F)	Btu/h	19,000	23,000	28,000	36,000	48,000
	Heating Rated Capacity (17° F)	Btu/h	12,000	13,600	17,400	23,200	29,600
	Heating Maximum Capacity (5° F)	Btu/h	13,900	23,000	28,000	36,000	36,000
	Heating Cap. Range Min − Max	Btu/h	5760~24480	6010~36180	6350~41950	7210~50350	7210~55820
	HSPF		10.3	10.0	10.0	10.5	10.2
	COP (47° F)	W/W	3.6	3.9	3.8	3.8	3.6
	COP (17° F)	W/W	2.8	2.7	2.8	2.8	2.7
	COP (5° F)	W/W	2.2	2.1	2.0	1.8	2.0
Performance Combination Ducted and Non−Ducted	Energy Star		NO	YES	NO	NO	NO
	Cooling System Tons		1.5	1.9	2.4	3.0	4.0
	Cooling Rated Capacity	Btu/h	18,000	23,000	29,000	35,500	48,000
	Cooling Cap. Range Min − Max	Btu/h	5795~20708	7765~31955	8060~39990	8510~42635	8510~52580
	SEER		20.45	21	21.65	19.25	20
	EER		12.15	12.5	12	12.15	11.3
	Heating Rated Capacity (47° F)	Btu/h	18,750	22,000	28,000	36,000	49,000
	Heating Rated Capacity (17° F)	Btu/h	11,700	12,900	17,300	23,800	31,300
	Heating Maximum Capacity (5° F)	Btu/h	14,150	22,000	28,000	35,500	36,400
	Heating Cap. Range Min − Max	Btu/h	5650~24365	5980~36190	6275~42305	7045~47800	7045~54935
	HSPF		9.9	9.4	9.5	9.9	10.2
	COP (47° F)	W/W	3.7	3.9	3.7	3.7	3.5
	COP (17° F)	W/W	2.7	2.6	2.7	2.7	2.7
	COP (5° F)	W/W	2.1	2.0	2.0	1.8	1.9
Performance Ducted	Energy Star		NO	YES	NO	NO	NO
	Cooling System Tons		1.5	1.8	2.3	2.9	4.0
	Cooling Rated Capacity	Btu/h	18,000	22,000	28,000	35,000	48,000
	Cooling Cap. Range Min − Max	Btu/h	5780~19476	7650~30400	8030~38510	8460~40250	8460~52000
	SEER		18.4	19	19.5	17	17.6
	EER		11.8	12.5	11.5	10.8	10.1
	Heating Rated Capacity (47° F)	Btu/h	18,500	21,000	28,000	36,000	50,000
	Heating Rated Capacity (17° F)	Btu/h	11,400	12,200	17,200	24,400	33,000
	Heating Maximum Capacity (5° F)	Btu/h	14,400	21,000	28,000	35,000	36,800
	Heating Cap. Range Min − Max	Btu/h	5539~24249	5950~36200	6200~42660	6880~45250	6880~54050
	HSPF		9.4	8.8	9.0	9.2	10.1
	COP (47° F)	W/W	3.8	3.8	3.6	3.6	3.4
	COP (17° F)	W/W	2.7	2.5	2.5	2.5	2.6
	COP (5° F)	W/W	2.1	2.0	2.0	1.7	1.8
Operating Range	Cooling Outdoor DB Min − Max	° F(° C)	−13~122 (−25~50)	−13~122 (−25~50)	−13~122 (−25~50)	−13~122 (−25~50)	−13~122 (−25~50)
	Heating Outdoor DB Min − Max	° F(° C)	−22~86 (−30~30)	−22~86 (−30~30)	−22~86 (−30~30)	−22~86 (−30~30)	−22~86 (−30~30)
Piping	Total Piping Length	ft (m)	131(40)	197(60)	263(80)	328(100)	328(100)
	Piping to furthest FCU	ft (m)	82 (25)	98 (30)	115(35)	115(35)	115 (35)
	Drop (OD above ID)	ft (m)	49(15)	49(15)	49(15)	65(20)	65(20)
	Lift (OD below ID)	ft (m)	49(15)	49(15)	49(15)	65(20)	65(20)
	Pipe Connection Size − Liquid	in (mm)	1/4*2 (6.35*2)	1/4*3 (6.35*3)	1/4*4 (6.35*4)	1/4*4 (6.35*4)	1/4*5 (6.35*5)
	Pipe Connection Size − Suction	in (mm)	3/8*2 (9.52*2)	3/8*3 (9.52*3)	1/2 *1+ 3/8*3 (12.7*1+9.52*3)	1/2 *1+ 3/8*3 (12.7*1+9.52*3)	1/2 *2+ 3/8*3 (12.7*2+9.52*3)
Refrigerant	Type		R410A	R410A	R410A	R410A	R410A
	Charge	lbs (kg)	4.41 (2.0)	6.17(2.8)	6.61 (3.0)	10.13 (4.6)	10.13 (4.6)
	Metering Device		EEV	EEV	EEV	EEV	EEV
Electrical	Voltage, Phase, Cycle	V/Ph/Hz	208/230−1−60	208/230−1−60	208/230−1−60	208/230−1−60	208/230−1−60
	Power Supply		Indoor unit powered from outdoor unit				
	MCA	A.	18	25	30	35	35
	MOCP − Fuse Rating	A.	25	35	45	50	50
Compressor	Type		Rotary Inverter	Rotary Inverter	Rotary Inverter	Rotary Inverter	Rotary Inverter
	Model		ATM150D23UFZ	ATF235D22UMT	ATF310D43UMT	ATQ360D1UMU	ATQ360D1UMU
	Oil Type		ESTER OIL VG74	ESTER OIL VG74	ESTER OIL VG74	ESTER OIL VG74	ESTER OIL VG74
	Oil Charge	Fl. Oz.	17.64	23.58	35.27	49.38	49.38
	Rated Current	RLA	10	15	19	21	21
Outdoor	Unit Width	in (mm)	37.31 (948)	41.22 (1047)	41.22 (1047)	41.15 (1045)	41.15 (1045)
	Unit Height	in (mm)	27.64 (702)	31.88 (810)	31.88 (810)	52.48 (1333)	52.48 (1333)
	Unit Depth	in (mm)	14.82 (376)	17.91 (455)	17.91 (455)	17.63 (448)	17.63 (448)
	Net Weight	lbs (kg)	105.8 (48)	149.9 (68)	156.5 (71)	221.6 (100.5)	223.8 (101.5)
	Airflow	CFM	1,390	2,130	2,130	4,500	4,500
	Sound Pressure	dB(A)	62	63	62	64	64

COOLING PERFORMANCE NON−DUCTED COMBINATIONS

MODEL	COOLING Indoor Conditions DB	WB		OUTDOOR CONDITIONS (DB) −13F (−25C)	−4F (−20C)	0F (−17C)	5F (−15C)	17F (−8C)	47F (8C)	77F (25C)	86F (30C)	95F (35C)	104F (40C)	113F (45C)	122F (50C)
18	69.8F (21C)	59F (15C)	TC	19.12	19.86	19.66	19.26	18.87	20.69	21.78	19.94	17.92	12.00	11.58	9.89
			SC	15.11	15.49	15.34	15.03	14.72	16.14	17.00	15.95	15.23	12.00	11.58	9.89
			Input	1.37	1.41	1.48	1.53	1.57	1.60	1.63	1.79	1.96	1.47	1.52	1.32
	75.2F (24C)	62.6F (17C)	TC	20.54	21.45	21.23	20.81	20.38	22.35	23.52	21.54	19.35	12.96	12.51	10.13
			SC	15.35	15.61	15.29	15.40	15.28	16.98	18.35	17.01	15.87	11.53	11.88	9.93
			Input	1.40	1.46	1.53	1.58	1.62	1.65	1.68	1.84	2.01	1.50	1.54	1.35
	80.6F (27C)	66.2F (19C)	TC	21.91	22.46	22.18	22.53	22.85	24.15	25.11	23.85	21.54	14.82	14.22	10.40
			SC	16.44	16.85	16.64	18.05	17.14	18.11	18.33	17.89	16.16	14.52	14.08	10.40
			Input	1.41	1.45	1.51	1.58	1.62	1.65	1.68	1.88	2.05	1.52	1.57	1.36
	89.6F (32C)	73.4F (23C)	TC	23.89	24.48	24.18	24.56	24.91	26.32	27.37	26.00	23.48	16.15	15.50	11.34
			SC	17.20	17.63	17.65	18.17	18.68	19.22	22.44	21.84	20.19	15.18	14.88	11.11
			Input	1.46	1.50	1.56	1.63	1.67	1.72	1.73	1.93	2.14	1.57	1.62	1.41
24	69.8F (21C)	59F (15C)	TC	31.96	32.76	32.58	32.60	32.15	32.75	32.44	26.94	24.46	19.98	17.56	15.45
			SC	22.38	22.94	22.81	22.82	22.51	22.93	25.47	22.82	21.70	19.42	17.21	15.45
			Input	2.26	2.32	2.31	2.34	2.36	2.38	2.41	2.26	2.50	2.39	2.58	2.62
	75.2F (24C)	62.6F (17C)	TC	34.53	35.39	35.19	35.21	34.72	35.37	35.04	29.10	26.42	21.58	18.96	16.69
			SC	24.17	24.77	24.63	24.65	24.31	24.76	26.28	23.86	22.72	19.42	18.02	16.52
			Input	2.30	2.36	2.35	2.38	2.40	2.42	2.45	2.30	2.54	2.43	2.60	2.66
	80.6F (27C)	66.2F (19C)	TC	36.25	37.15	37.24	37.08	37.51	37.68	37.53	35.39	32.75	24.71	23.96	20.15
			SC	25.38	26.01	26.07	25.96	26.26	26.38	26.95	26.08	25.06	22.09	23.84	20.05
			Input	2.20	2.25	2.28	2.34	2.35	2.41	2.47	2.75	3.04	2.48	2.62	2.74
	89.6F (32C)	73.4F (23C)	TC	38.78	39.75	39.85	39.68	40.14	40.32	40.16	37.87	35.04	26.44	25.64	21.56
			SC	27.15	27.83	27.89	27.77	28.09	30.64	32.93	32.19	31.19	24.32	24.61	21.56
			Input	2.26	2.32	2.35	2.38	2.42	2.48	2.54	2.82	3.11	2.55	2.69	2.81
30	69.8F (21C)	59F (15C)	TC	39.15	40.12	40.28	39.54	39.18	40.81	39.79	37.98	36.16	28.21	26.56	23.46
			SC	27.40	28.08	28.20	27.68	27.43	30.61	31.57	30.73	29.86	26.40	26.18	23.12
			Input	3.08	3.16	3.18	3.12	3.21	3.24	3.28	3.62	3.99	3.13	3.25	2.66
	75.2F (24C)	62.6F (17C)	TC	40.32	41.32	41.49	40.73	40.36	42.03	41.38	41.02	39.05	30.47	28.68	25.34
			SC	28.23	28.93	29.04	28.51	28.25	31.53	33.93	36.10	35.15	28.03	27.25	24.83
			Input	3.13	3.21	3.23	3.17	3.26	3.29	3.33	3.67	4.04	3.18	3.30	2.71
	80.6F (27C)	66.2F (19C)	TC	41.13	42.15	42.51	42.61	42.10	42.61	42.41	40.63	38.82	32.17	30.47	27.53
			SC	28.79	29.51	29.76	29.83	29.47	31.96	32.30	31.45	30.57	28.30	30.18	27.25
			Input	3.13	3.21	3.25	3.29	3.31	3.38	3.42	3.67	4.05	3.21	3.31	2.76
	89.6F (32C)	73.4F (23C)	TC	44.41	45.52	45.91	46.02	45.47	46.02	45.80	43.88	41.93	34.74	32.91	29.73
			SC	31.10	31.87	32.14	32.21	31.83	34.51	37.56	38.61	37.73	31.96	31.26	29.73
			Input	3.19	3.27	3.31	3.35	3.37	3.44	3.48	3.73	4.11	3.27	3.37	2.82
36	69.8F (21C)	59F (15C)	TC	37.82	38.76	38.32	39.02	39.41	40.44	40.91	36.89	33.97	27.85	25.60	23.33
			SC	26.47	27.13	26.82	27.31	28.38	30.33	31.91	30.25	28.88	24.50	23.55	22.40
			Input	2.69	2.76	2.83	2.87	2.91	2.98	3.03	3.39	3.79	3.68	3.76	3.41
	75.2F (24C)	62.6F (17C)	TC	38.96	39.93	39.47	40.19	40.59	41.65	42.54	39.84	36.69	30.07	27.65	25.20
			SC	27.27	27.95	27.63	28.13	28.42	31.24	34.88	35.06	33.02	27.67	26.26	24.69
			Input	2.74	2.81	2.88	2.92	2.96	3.03	3.08	3.44	3.84	3.73	3.81	3.46
	80.6F (27C)	66.2F (19C)	TC	42.58	43.64	43.31	44.15	44.54	45.02	45.94	43.73	41.49	34.44	31.93	27.16
			SC	29.81	30.55	30.32	30.91	31.18	33.77	35.83	34.99	35.26	31.00	30.33	26.62
			Input	2.79	2.86	2.89	2.91	2.95	3.06	3.10	3.48	3.91	3.80	3.85	3.47
	89.6F (32C)	73.4F (23C)	TC	45.98	47.13	46.78	47.68	48.10	48.63	49.61	47.23	44.80	37.20	34.48	29.34
			SC	32.19	32.99	32.74	33.38	33.67	36.47	40.68	41.56	40.32	34.22	32.76	29.34
			Input	2.85	2.92	2.95	2.97	3.01	3.12	3.16	3.54	3.97	3.86	3.91	3.53
48	69.8F (21C)	59F (15C)	TC	41.22	42.25	42.51	41.87	41.24	41.97	41.47	39.32	36.26	32.97	29.86	26.54
			SC	28.86	29.58	29.76	29.31	28.87	30.64	37.24	36.86	35.53	32.97	29.86	26.54
			Input	2.19	2.24	2.28	2.35	2.38	2.41	2.46	2.78	3.11	3.45	3.64	3.08
	75.2F (24C)	62.6F (17C)	TC	44.52	45.63	45.91	45.22	44.54	45.33	44.79	42.47	39.16	35.61	32.25	28.66
			SC	32.50	33.31	33.51	33.01	32.51	34.90	37.17	36.10	34.07	32.05	32.25	28.66
			Input	2.25	2.31	2.35	2.42	2.45	2.48	2.53	2.85	3.18	3.52	3.71	3.15
	80.6F (27C)	66.2F (19C)	TC	53.80	55.14	54.68	55.31	56.15	56.72	60.26	56.82	53.16	40.95	38.57	35.24
			SC	40.35	41.36	41.01	42.12	42.11	42.54	46.04	44.49	42.79	37.95	38.57	35.24
			Input	2.99	3.06	3.15	3.25	3.29	3.46	3.94	4.36	4.80	3.79	3.98	3.43
	89.6F (32C)	73.4F (23C)	TC	56.49	57.90	57.41	58.08	58.96	59.56	63.27	59.66	55.82	43.00	40.50	37.04
			SC	41.80	42.84	42.49	42.98	43.63	46.45	52.52	51.31	50.24	40.85	40.50	37.04
			Input	3.05	3.13	3.22	3.32	3.36	3.53	4.01	4.43	4.87	3.86	4.05	3.50

LEGEND
DB – Dry Bulb
WB – Wet Bulb
TC – Total Net Cooling Capacity (1000 Btu/hour)
SC – Sensible Capacity (1000 Btu/hour)
Input – Total Power (kW)

HEATING PERFORMANCE NON−DUCTED COMBINATIONS

MODEL	HEATING		OUTDOOR CONDITIONS (DB)											
	Indoor Conditions DB		−22F (−30C)	−13F (−25C)	−4F (−20C)	0F (−17C)	5F (−15C)	17F (−8C)	19.4F (−7C)	24.8F (−4C)	32F (0C)	39.2F (4C)	44.6F (7C)	53.6F (12C)
18	59F (15C)	TC	7.74	9.54	11.60	12.54	14.40	19.21	19.46	20.59	20.74	21.67	25.82	27.35
		Input	1.67	1.71	1.76	1.80	1.87	1.93	1.95	2.01	1.60	1.66	1.79	1.87
		COP	1.36	1.64	1.93	2.04	2.19	2.92	2.92	3.00	3.80	3.83	4.21	4.28
	64.4F (18C)	TC	7.63	9.40	11.43	12.35	14.01	18.92	19.17	20.28	20.43	21.34	25.43	26.94
		Input	1.70	1.74	1.79	1.83	1.90	1.96	1.98	2.04	1.63	1.69	1.82	1.90
		COP	1.31	1.58	1.87	1.98	2.16	2.83	2.84	2.91	3.67	3.70	4.10	4.16
	69F (20.5C)	TC	5.52	6.54	7.69	8.14	13.99	15.02	15.94	17.13	18.93	19.66	23.96	26.67
		Input	1.41	1.44	1.46	1.47	1.91	1.63	1.68	1.76	1.80	1.88	1.95	1.97
		COP	1.15	1.33	1.54	1.62	2.15	2.70	2.78	2.85	3.08	3.05	3.59	3.96
	71.6F (22C)	TC	5.84	6.44	7.57	8.02	13.65	14.79	15.70	16.87	18.65	19.37	23.60	26.27
		Input	1.44	1.47	1.49	1.50	2.01	1.66	1.71	1.79	1.83	1.91	1.98	2.00
		COP	1.19	1.28	1.49	1.57	1.99	2.61	2.69	2.76	2.99	2.97	3.49	3.85
24	59F (15C)	TC	14.13	17.95	20.25	22.73	24.45	25.66	26.04	28.31	30.43	32.22	36.92	40.88
		Input	2.93	3.19	3.23	3.45	3.63	2.66	2.79	2.87	2.65	2.78	2.96	2.71
		COP	1.41	1.65	1.84	1.93	1.98	2.83	2.74	2.89	3.37	3.40	3.65	4.43
	64.4F (18C)	TC	13.95	17.73	20.00	22.45	24.35	25.34	25.72	27.96	30.12	31.89	36.37	40.27
		Input	3.00	3.27	3.31	3.53	3.74	2.73	2.86	2.94	2.72	2.89	2.99	2.74
		COP	1.36	1.59	1.77	1.86	1.91	2.73	2.64	2.79	3.25	3.23	3.56	4.31
	69F (20.5C)	TC	13.85	17.59	19.84	22.28	24.17	25.15	25.52	27.74	29.89	31.21	36.22	40.71
		Input	3.07	3.34	3.38	3.61	3.90	2.79	2.92	3.01	2.77	2.96	3.04	3.17
		COP	1.32	1.54	1.72	1.81	1.81	2.65	2.56	2.71	3.16	3.09	3.49	3.76
	71.6F (22C)	TC	13.78	17.50	19.75	22.16	23.55	25.02	25.39	27.60	29.74	30.78	35.68	40.10
		Input	3.14	3.42	3.46	3.70	3.83	2.85	2.99	3.08	2.84	3.01	3.07	3.20
		COP	1.29	1.50	1.67	1.76	1.80	2.57	2.49	2.63	3.07	3.00	3.41	3.67
30	59F (15C)	TC	18.66	22.54	24.52	26.84	29.23	31.77	32.06	33.46	35.15	37.09	38.47	41.89
		Input	3.39	3.46	3.45	3.62	3.74	3.71	3.73	3.79	3.08	3.12	3.27	3.37
		COP	1.61	1.91	2.08	2.17	2.29	2.51	2.52	2.59	3.34	3.48	3.45	3.64
	64.4F (18C)	TC	18.41	22.23	24.18	26.47	28.74	31.31	31.59	32.97	34.64	36.55	37.89	41.26
		Input	3.42	3.49	3.53	3.75	3.86	3.84	3.86	3.92	3.11	3.15	3.30	3.40
		COP	1.58	1.87	2.01	2.07	2.18	2.39	2.40	2.47	3.26	3.40	3.37	3.56
	69F (20.5C)	TC	16.70	20.65	22.05	24.02	28.22	27.67	28.13	31.86	33.96	36.08	37.21	40.27
		Input	3.51	3.58	3.64	3.76	4.05	3.85	3.90	4.04	3.14	3.18	3.21	3.30
		COP	1.39	1.69	1.78	1.87	2.04	2.11	2.11	2.31	3.17	3.33	3.40	3.58
	71.6F (22C)	TC	15.51	19.42	21.79	23.73	25.99	27.27	27.72	31.38	33.45	35.54	36.65	39.67
		Input	3.64	3.61	3.77	3.79	3.81	3.88	3.93	4.07	3.17	3.21	3.24	3.33
		COP	1.25	1.58	1.69	1.84	2.00	2.06	2.07	2.26	3.09	3.24	3.32	3.49
36	59F (15C)	TC	23.82	28.67	30.78	33.61	36.66	39.29	39.91	41.15	43.10	45.78	56.86	62.85
		Input	4.91	5.02	5.17	5.20	5.24	5.11	5.13	5.21	4.56	4.73	4.90	4.56
		COP	1.42	1.67	1.74	1.89	2.05	2.25	2.28	2.31	2.77	2.84	3.40	4.04
	64.4F (18C)	TC	23.52	28.29	30.37	33.15	36.15	38.70	39.31	40.53	42.46	45.09	56.01	61.91
		Input	4.97	5.08	5.23	5.26	5.33	5.17	5.19	5.27	4.62	4.79	4.96	4.62
		COP	1.39	1.63	1.70	1.85	2.00	2.19	2.22	2.25	2.70	2.76	3.31	3.93
	69F (20.5C)	TC	23.03	27.69	29.04	31.77	36.08	37.41	37.75	39.77	42.39	46.46	50.54	54.37
		Input	5.04	5.15	5.24	5.27	5.39	5.25	5.27	5.35	4.62	4.96	4.66	4.30
		COP	1.34	1.58	1.62	1.77	1.96	2.09	2.10	2.18	2.69	2.74	3.18	3.71
	71.6F (22C)	TC	22.63	27.20	28.52	31.20	34.64	36.66	36.99	38.97	41.54	45.53	49.53	53.28
		Input	5.09	5.20	5.29	5.32	5.34	5.30	5.32	5.40	4.67	5.01	4.71	4.35
		COP	1.30	1.53	1.58	1.72	1.90	2.03	2.04	2.11	2.61	2.66	3.08	3.59
48	59F (15C)	TC	23.97	28.85	30.97	33.82	37.29	39.53	40.16	41.41	43.37	46.06	57.21	67.67
		Input	4.96	5.07	5.22	5.25	5.33	5.16	5.18	5.26	4.61	4.78	4.95	4.61
		COP	1.42	1.67	1.74	1.89	2.05	2.24	2.27	2.31	2.76	2.83	3.39	4.31
	64.4F (18C)	TC	23.71	28.52	30.61	33.42	36.84	39.01	39.62	40.85	42.80	45.45	56.46	66.65
		Input	5.07	5.18	5.33	5.37	5.51	5.27	5.29	5.38	4.71	4.89	5.06	4.71
		COP	1.37	1.61	1.68	1.83	1.98	2.17	2.19	2.23	2.66	2.73	3.27	4.15
	69F (20.5C)	TC	23.33	28.05	29.42	32.18	36.34	37.90	38.24	40.29	42.94	47.06	55.83	65.74
		Input	5.10	5.21	5.30	5.33	5.39	5.31	5.33	5.41	4.68	4.63	4.71	5.04
		COP	1.34	1.58	1.63	1.77	1.96	2.09	2.10	2.18	2.69	2.98	3.47	3.82
	71.6F (22C)	TC	22.88	27.50	28.83	31.54	35.02	37.06	37.40	39.40	42.00	46.03	54.71	64.43
		Input	5.15	5.26	5.35	5.38	5.40	5.36	5.38	5.46	4.73	5.07	4.76	5.09
		COP	1.30	1.53	1.58	1.72	1.90	2.03	2.04	2.11	2.60	2.66	3.37	3.71

LEGEND
DB – Dry Bulb
WB – Wet Bulb
TC – Total Net Heating Capacity (1000 Btu/hour)
Input – Total Power (kW)
COP – W/W

COOLING PERFORMANCE DUCTED COMBINATIONS

MODEL	COOLING Indoor Conditions DB	WB		OUTDOOR CONDITIONS (DB) −13F (−25C)	−4F (−20C)	0F (−17C)	5F (−15C)	17F (−8C)	47F (8C)	77F (25C)	86F (30C)	95F (35C)	104F (40C)	113F (45C)	122F (50C)
18	69.8F (21C)	59F (15C)	TC	18.3	18.65	18.43	18.75	18.88	19.12	20.26	18.47	16.53	11.28	10.64	9.86
			SC	12.81	13.06	12.90	13.13	13.22	13.38	15.17	14.04	13.10	10.91	10.24	9.73
			Input	1.38	1.41	1.43	1.46	1.51	1.54	1.57	1.71	1.87	1.43	1.49	1.54
	75.2F (24C)	62.6F (17C)	TC	19.76	20.14	19.90	20.25	20.39	20.65	21.88	19.95	17.85	12.18	11.49	10.13
			SC	13.83	14.10	14.33	14.99	15.29	15.69	17.07	15.76	14.64	10.84	10.92	9.93
			Input	1.43	1.46	1.48	1.51	1.56	1.59	1.62	1.76	1.92	1.50	1.54	1.35
	80.6F (27C)	66.2F (19C)	TC	21.14	21.54	21.61	21.69	21.86	22.06	23.06	21.85	20.53	13.72	11.56	10.61
			SC	14.8	15.08	15.13	15.18	15.30	15.44	16.14	15.30	14.67	12.11	11.18	10.49
			Input	1.5	1.53	1.55	1.57	1.59	1.60	1.61	1.79	1.97	1.45	1.53	1.58
	89.6F (32C)	73.4F (23C)	TC	23.04	23.48	23.55	23.64	23.83	24.05	25.14	23.82	22.38	14.95	12.60	11.56
			SC	16.58	16.90	17.20	17.50	17.87	17.55	20.61	20.01	19.24	14.06	12.10	11.33
			Input	1.55	1.58	1.60	1.62	1.64	1.72	1.66	1.84	2.14	1.50	1.58	1.63
24	69.8F (21C)	59F (15C)	TC	27.01	27.53	27.42	27.46	27.23	27.56	27.05	25.22	22.79	18.48	16.18	14.26
			SC	18.91	19.27	19.19	19.22	19.06	19.29	20.83	19.93	18.92	16.82	15.86	14.16
			Input	1.94	1.98	2.01	2.02	2.04	2.05	2.06	2.28	2.51	2.40	2.48	2.56
	75.2F (24C)	62.6F (17C)	TC	29.17	29.73	29.61	29.66	29.41	29.76	29.21	27.24	24.61	19.96	17.47	15.40
			SC	20.42	20.81	20.73	20.76	20.59	20.84	21.91	22.33	21.17	17.96	16.60	15.25
			Input	1.98	2.02	2.05	2.06	2.08	2.09	2.10	2.32	2.55	2.44	2.60	2.60
	80.6F (27C)	66.2F (19C)	TC	32.9	33.53	33.43	33.22	33.18	33.42	33.40	31.64	29.45	22.61	20.56	18.47
			SC	23.03	23.47	23.40	23.25	23.23	23.39	23.04	22.47	21.50	18.76	20.28	18.38
			Input	2.11	2.15	2.20	2.34	3.38	2.42	2.45	2.72	3.03	2.49	2.54	2.63
	89.6F (32C)	73.4F (23C)	TC	35.21	35.88	35.77	35.55	35.50	35.76	35.74	33.85	31.51	24.19	22.00	19.76
			SC	24.64	25.11	25.04	24.88	24.85	27.18	29.31	28.78	28.05	22.26	21.12	19.76
			Input	2.18	2.22	2.27	2.38	3.45	2.49	2.52	2.79	3.10	2.56	2.61	2.70
30	69.8F (21C)	59F (15C)	TC	34.76	35.43	35.18	35.62	36.15	36.20	36.96	35.27	33.22	24.93	22.56	20.15
			SC	24.33	24.80	24.63	24.93	25.31	25.34	27.94	27.17	26.27	22.53	21.98	19.49
			Input	3.26	3.32	3.41	3.48	3.52	3.60	3.64	3.69	4.04	3.15	3.20	2.86
	75.2F (24C)	62.6F (17C)	TC	35.8	36.49	36.24	36.69	37.23	37.29	38.44	38.09	35.88	26.92	24.36	21.76
			SC	25.07	25.55	25.36	25.68	26.06	27.96	31.52	33.52	32.29	24.77	23.15	21.33
			Input	3.31	3.37	3.46	3.53	3.57	3.65	3.69	3.74	4.09	3.20	3.25	2.91
	80.6F (27C)	66.2F (19C)	TC	39.77	40.53	40.42	41.20	41.08	40.62	40.12	38.91	37.11	29.31	27.14	23.53
			SC	27.84	28.37	28.29	28.56	28.76	28.43	30.33	27.74	27.09	24.22	26.06	23.06
			Input	3.34	3.40	3.49	3.56	3.60	3.68	3.72	3.76	4.14	3.26	3.29	2.79
	89.6F (32C)	73.4F (23C)	TC	42.95	43.77	43.65	44.49	44.37	43.87	43.33	42.02	40.08	31.65	29.31	25.41
			SC	30.06	30.64	30.56	31.14	31.06	32.90	35.53	36.98	36.07	29.12	27.85	25.41
			Input	3.39	3.46	3.55	3.62	3.66	3.74	3.78	3.82	4.20	3.32	3.35	2.85
36	69.8F (21C)	59F (15C)	TC	35.88	36.57	36.15	36.81	37.18	38.15	38.59	34.80	32.05	26.27	24.15	22.01
			SC	25.12	25.60	25.31	25.77	26.03	26.71	28.94	26.73	25.64	23.09	24.07	22.01
			Input	2.77	2.82	2.89	2.93	2.97	3.04	3.09	3.46	3.87	3.76	3.84	3.48
	75.2F (24C)	62.6F (17C)	TC	38.76	39.50	39.04	39.75	40.15	41.20	41.68	37.58	34.61	28.37	26.08	23.77
			SC	28.29	28.83	28.50	29.02	29.31	31.73	34.59	31.95	30.11	25.53	26.08	23.77
			Input	2.84	2.89	2.96	3.00	3.04	3.11	3.16	3.53	3.94	3.83	3.91	3.55
	80.6F (27C)	66.2F (19C)	TC	40.78	41.56	41.25	42.05	42.42	42.88	43.75	41.65	39.51	32.80	30.41	25.87
			SC	28.54	29.09	28.88	29.44	29.69	30.02	31.06	29.98	28.45	25.78	30.28	25.87
			Input	2.87	2.92	2.95	2.97	3.01	3.12	3.16	3.55	3.99	3.88	3.93	3.54
	89.6F (32C)	73.4F (23C)	TC	42.82	43.64	43.31	44.15	44.54	45.02	45.94	43.73	41.49	34.44	31.93	27.19
			SC	31.68	32.29	32.05	32.67	32.96	35.12	38.13	37.61	37.34	32.72	31.93	27.19
			Input	2.93	2.99	3.02	3.04	3.08	3.19	3.23	3.62	4.06	3.95	4.00	3.61
48	69.8F (21C)	59F (15C)	TC	39.49	40.25	40.41	40.87	40.14	40.97	40.25	38.41	35.24	31.42	27.98	25.48
			SC	27.65	28.18	28.29	28.61	28.10	29.91	36.89	35.46	34.61	30.86	27.98	25.48
			Input	2.2	2.24	2.28	2.35	2.38	2.41	2.46	2.78	3.11	3.45	3.64	3.08
	75.2F (24C)	62.6F (17C)	TC	42.65	43.47	43.64	44.14	43.35	44.25	43.47	41.48	38.06	33.93	30.22	27.52
			SC	31.13	31.73	31.86	32.22	31.65	34.07	36.08	35.26	33.11	30.54	30.22	27.52
			Input	2.27	2.31	2.35	2.42	2.45	2.48	2.53	2.85	3.18	3.52	3.71	3.15
	80.6F (27C)	66.2F (19C)	TC	51.77	52.76	52.93	52.85	52.41	52.56	52.55	49.63	46.29	38.92	36.56	32.12
			SC	36.24	36.93	37.05	37.00	36.69	36.79	37.31	36.23	34.72	36.30	35.75	32.12
			Input	3.57	3.64	3.69	3.75	3.81	3.86	3.96	4.44	4.94	3.90	4.12	3.68
	89.6F (32C)	73.4F (23C)	TC	54.36	55.40	55.58	55.49	55.03	55.19	55.18	52.11	48.60	40.87	38.39	33.76
			SC	40.22	40.99	41.13	41.06	40.72	43.05	45.80	44.82	43.74	38.82	38.39	33.76
			Input	3.64	3.71	3.76	3.82	3.88	3.93	4.03	4.51	5.01	3.97	4.19	3.75

LEGEND
DB — Dry Bulb
WB — Wet Bulb
TC — Total Net Heating Capacity (1000 Btu/hour)
SC — Sensible Capacity (1000 Btu/hour)
Input — Total Power (k/W)

HEATING PERFORMANCE DUCTED COMBINATIONS

MODEL	HEATING Indoor Conditions DB		OUTDOOR CONDITIONS (DB)											
			–22F (–30C)	–13F (–25C)	–4F (–20C)	0F (–17C)	5F (–15C)	17F (–8C)	19.4F (–7C)	24.8F (–4C)	32F (0C)	39.2F (4C)	44.6F (7C)	53.6F (12C)
18	59F (15C)	TC	7.25	9.05	11.18	12.58	14.73	16.91	17.12	17.64	18.36	19.67	23.68	25.16
		Input	1.65	1.69	1.81	1.83	1.98	1.87	1.88	1.93	1.65	1.76	2.02	1.86
		COP	1.29	1.57	1.81	2.01	2.18	2.65	2.67	2.68	3.26	3.28	3.44	3.96
	64.4F (18C)	TC	7.14	8.91	11.01	12.39	14.56	16.66	16.86	17.38	18.08	19.37	23.32	24.78
		Input	1.68	1.72	1.84	1.86	2.02	1.90	1.91	1.96	1.68	1.79	2.05	1.89
		COP	1.24	1.52	1.75	1.95	2.11	2.57	2.59	2.60	3.15	3.17	3.33	3.84
	69F (20.5C)	TC	5.31	6.16	7.02	8.13	14.40	13.39	13.48	16.58	17.86	18.05	20.60	20.09
		Input	1.46	1.49	1.54	1.55	2.01	1.68	1.71	1.88	1.86	1.94	2.00	1.59
		COP	1.07	1.21	1.34	1.54	2.10	2.34	2.31	2.58	2.81	2.73	3.02	3.70
	71.6F (22C)	TC	5.23	6.07	6.91	8.01	13.56	13.19	13.28	16.33	17.59	17.78	20.29	19.79
		Input	1.49	1.52	1.57	1.58	2.05	1.71	1.74	1.91	1.89	1.97	2.03	1.62
		COP	1.03	1.17	1.29	1.49	1.94	2.26	2.24	2.51	2.73	2.65	2.93	3.58
24	59F (15C)	TC	13.95	17.73	20.00	22.45	23.85	25.34	25.72	27.96	30.05	31.82	36.46	40.37
		Input	2.97	3.24	3.28	3.50	3.62	2.70	2.83	2.91	2.69	2.82	3.00	2.75
		COP	1.38	1.60	1.79	1.88	1.93	2.75	2.66	2.81	3.27	3.31	3.56	4.30
	64.4F (18C)	TC	13.78	17.51	19.75	22.17	23.55	25.03	25.40	27.61	29.75	31.49	35.92	39.77
		Input	3.05	3.32	3.36	3.59	3.71	2.77	2.90	2.98	2.76	2.93	3.03	2.78
		COP	1.33	1.55	1.72	1.81	1.86	2.65	2.57	2.71	3.16	3.15	3.47	4.19
	69F (20.5C)	TC	13.68	17.37	19.60	22.00	23.37	24.83	25.20	27.40	29.52	30.82	35.77	40.21
		Input	3.11	3.39	3.43	3.67	3.79	2.83	2.97	3.05	2.82	3.00	3.09	3.22
		COP	1.29	1.50	1.67	1.76	1.81	2.57	2.49	2.63	3.07	3.01	3.40	3.66
	71.6F (22C)	TC	13.61	17.29	19.50	21.89	23.26	24.71	25.08	27.26	29.37	30.40	35.24	39.60
		Input	3.19	3.47	3.51	3.75	3.88	2.89	3.03	3.12	2.88	3.06	3.12	3.25
		COP	1.25	1.46	1.63	1.71	1.76	2.50	2.42	2.56	2.99	2.92	3.31	3.57
30	59F (15C)	TC	18.43	22.26	24.22	26.51	27.98	31.38	31.66	33.05	34.71	36.63	37.99	41.37
		Input	3.44	3.51	3.50	3.67	3.68	3.77	3.79	3.85	3.13	3.17	3.32	3.42
		COP	1.57	1.86	2.03	2.11	2.23	2.44	2.45	2.52	3.25	3.39	3.35	3.54
	64.4F (18C)	TC	18.18	21.95	23.88	26.14	27.59	30.92	31.20	32.56	34.21	36.10	37.42	40.75
		Input	3.47	3.54	3.58	3.81	3.82	3.90	3.92	3.98	3.16	3.20	3.35	3.45
		COP	1.54	1.82	1.95	2.01	2.12	2.33	2.33	2.40	3.18	3.31	3.27	3.46
	69F (20.5C)	TC	16.49	20.39	21.78	23.72	25.98	27.33	27.78	31.46	33.54	35.63	36.75	39.77
		Input	3.56	3.63	3.69	3.82	3.84	3.91	3.96	4.10	3.19	3.23	3.26	3.35
		COP	1.36	1.64	1.73	1.82	1.98	2.05	2.06	2.25	3.08	3.24	3.31	3.48
	71.6F (22C)	TC	15.32	19.18	21.52	23.44	25.67	26.93	27.38	30.99	33.04	35.10	36.20	39.18
		Input	3.69	3.66	3.83	3.85	3.87	3.94	3.99	4.13	3.22	3.26	3.29	3.38
		COP	1.22	1.53	1.65	1.79	1.95	2.00	2.01	2.20	3.01	3.16	3.23	3.40
36	59F (15C)	TC	23.05	27.74	29.78	32.52	35.47	38.02	38.62	39.82	41.70	44.30	55.02	60.81
		Input	4.98	5.10	5.25	5.28	5.31	5.19	5.21	5.29	4.63	4.80	4.97	4.63
		COP	1.36	1.60	1.66	1.81	1.96	2.15	2.17	2.21	2.64	2.70	3.24	3.85
	64.4F (18C)	TC	22.76	27.38	29.39	32.08	35.29	37.45	38.04	39.22	41.09	43.64	54.21	59.92
		Input	5.04	5.16	5.31	5.34	5.37	5.25	5.27	5.35	4.69	4.86	5.03	4.69
		COP	1.32	1.56	1.62	1.76	1.93	2.09	2.12	2.15	2.57	2.63	3.16	3.74
	69F (20.5C)	TC	22.29	26.80	28.10	30.75	35.14	36.21	36.53	38.49	41.03	44.96	48.91	52.62
		Input	5.12	5.23	5.32	5.35	5.37	5.33	5.35	5.43	4.69	5.03	4.73	4.36
		COP	1.28	1.50	1.55	1.68	1.92	1.99	2.00	2.08	2.56	2.62	3.03	3.53
	71.6F (22C)	TC	21.90	26.32	27.60	30.20	34.52	35.48	35.80	37.72	40.20	44.06	47.94	51.56
		Input	5.17	5.28	5.37	5.40	5.42	5.38	5.40	5.48	4.74	5.09	4.78	4.42
		COP	1.24	1.46	1.51	1.64	1.87	1.93	1.94	2.02	2.49	2.54	2.94	3.42
48	59F (15C)	TC	23.20	27.92	29.97	32.73	36.70	38.26	38.86	40.07	41.97	44.58	55.37	65.49
		Input	5.03	5.15	5.30	5.33	5.36	5.24	5.26	5.34	4.67	4.85	5.02	4.67
		COP	1.35	1.59	1.66	1.80	2.01	2.14	2.17	2.20	2.63	2.69	3.23	4.11
	64.4F (18C)	TC	22.94	27.60	29.63	32.34	36.27	37.75	38.35	39.54	41.42	43.99	54.64	64.50
		Input	5.15	5.26	5.41	5.45	5.48	5.35	5.37	5.46	4.78	4.96	5.14	4.78
		COP	1.31	1.54	1.60	1.74	1.94	2.07	2.09	2.12	2.54	2.60	3.12	3.95
	69F (20.5C)	TC	22.58	27.15	28.47	31.15	36.13	36.68	37.01	38.99	41.56	45.55	54.03	63.62
		Input	5.18	5.29	5.38	5.41	5.50	5.39	5.41	5.50	4.75	4.70	4.78	5.12
		COP	1.28	1.50	1.55	1.69	1.93	1.99	2.00	2.08	2.57	2.84	3.31	3.65
	71.6F (22C)	TC	22.14	26.61	27.91	30.53	35.09	35.87	36.19	38.13	40.64	44.55	52.95	62.36
		Input	5.23	5.34	5.43	5.46	5.52	5.44	5.46	5.55	4.80	5.15	4.83	5.17
		COP	1.24	1.46	1.51	1.64	1.86	1.93	1.94	2.01	2.48	2.54	3.21	3.54

LEGEND
DB – Dry Bulb
WB – Wet Bulb
TC – Total Net Heating Capacity (1000 Btu/hour)
Input – Total Power (kW)
COP – (W/W)

PIPING REQUIREMENTS

SYSTEM SIZE			18K	24K	30K	36K	48K
Piping	Min. Piping Length per each indoor unit	ft (m)	10 (3)	10 (3)	10 (3)	10 (3)	10 (3)
	Standard Piping Length per each indoor unit	ft (m)	25 (7.5)	25 (7.5)	25 (7.5)	25 (7.5)	25 (7.5)
	Max. outdoor−indoor height difference (OU higher than IU)	ft (m)	49 (15)	49 (15)	49 (15)	65 (20)	65 (20)
	Max. outdoor−indoor height difference (IU higher than OU)	ft (m)	49 (15)	49 (15)	49 (15)	65 (20)	65 (20)
	Max. height different between indoor units	ft (m)	32 (10)	32 (10)	32 (10)	32 (10)	32 (10)
	Max. Length per each indoor unit	ft (m)	82 (25)	98 (30)	115 (35)	115 (35)	115 (35)
	Max. Piping Length with no additional refrigerant charge per System (Standard Piping length x No. of Zones)	ft (m)	49 (15)	74 (22.5)	98 (30)	123 (37.5)	123 (37.5)
	Total Maximum Piping Length per system	ft (m)	131 (40)	197 (60)	263 (80)	328 (100)	328 (100)
	Additional refrigerant charge (between Standard – Max piping length)	Oz/ft (g/m)	0.16 (15)	0.16 (15)	0.16 (15)	0.16 (15)	0.16 (15)
	Suction Pipe Size	in (mm)	3/8*2 (9.52*2)	3/8*3 (9.52*3)	1/2*1+3/8*3 (12.7*1+9.52*3)	1/2 *1+3/8*3 (12.7*1+9.52*3)	1/2 *2+3/8*3 (12.7*2+9.52*3)
	Liquid Pipe Size	in (mm)	1/4 *2 (6.3*2)	1/4 *3 (6.3*3)	1/4 *4 (6.3*4)	1/4 *4 (6.3*4)	1/4 *5 (6.3*5)
Refrigerant	Refrigerant Type		R410A	R410A	R410A	R410A	R410A
	Charge Amount	Lbs (kg)	4.41 (2.0)	6.17 (2.8)	6.61 (3.0)	10.14 (4.6)	10.14 (4.6)

NOTE: **The refrigerant charge included is adequate for the outdoor unit's maximum number of zones multiplied by the standard piping length per zone.**

APPLICATION DATA

Unit Selection

When selecting a variable speed system match the system capacity range to the anticipated load range. Since a variable speed system can accommodate a wide range of loads it is important to understand the percentage of time that the system will be required to run at both the maximum and the minimum load points. This differential is most evident when a residential application is compared with a commercial application.

Generally there will be more load diversification in the residential application (shifting from low load to high load). The commercial application tends to be more steady during the normal day time hours, and will go to low load levels after normal business hours. If it is anticipated that the system needs to run at the maximum load point for the majority of the time, the next larger system capacity should be selected.

The Application Data table on the following page is a guideline for selecting the proper size for the application.

APPLICATION DATA

Size	No. of Zones	Cooling Capacity (Btu/h)					Heating Capacity (Btu/h)				
18K		Zone 1	Zone 2	Zone 3	Zone 4	Zone 5	Zone 1	Zone 2	Zone 3	Zone 4	Zone 5
9+9	2-Zone	9,000	9,000				9,500	9,500			
9+12		8,500	10,500				9,000	11,000			
12+12		9,500	9,500				10,000	10,000			
24K		Zone 1	Zone 2	Zone 3	Zone 4	Zone 5	Zone 1	Zone 2	Zone 3	Zone 4	Zone 5
9+9	2-Zone	9,500	9,500				10,000	10,000			
9+12		9,500	12,000				10,000	13,000			
9+18		8,400	16,600				9,000	18,000			
12+12		12,000	12,000				13,000	13,000			
12+18		10,000	15,000				11,200	16,800			
18+18		14,000	14,000				15,000	15,000			
9+9+9	3-Zone	9,000	9,000	9,000			9,500	9,500	9,500		
9+9+12		8,667	8,667	11,667			9,500	9,500	12,000		
9+9+18		8,333	8,333	13,333			9,000	9,000	14,000		
9+12+12		8,500	10,000	10,000			8,500	11,000	11,000		
12+12+12		9,667	9,667	9,667			10,667	10,667	10,667		
30K		Zone 1	Zone 2	Zone 3	Zone 4	Zone 5	Zone 1	Zone 2	Zone 3	Zone 4	Zone 5
9+9	2-Zone	10,000	10,000				10,500	10,500			
9+12		9,500	12,000				10,000	13,000			
9+18		9,500	17,500				10,000	18,000			
9+24		9,000	24,000				10,000	25,000			
12+12		12,000	12,000				13,000	13,000			
12+18		12,000	18,000				13,000	18,000			
12+24		11,000	23,000				12,000	24,000			
18+18		16,500	16,500				17,000	17,000			
9+9+9	3-Zone	9,333	9,333	9,333			9,667	9,667	9,667		
9+9+12		9,000	9,000	12,000			9,500	9,500	12,500		
9+9+18		8,000	8,000	16,000			8,500	8,500	17,000		
9+9+24		7,500	7,500	20,000			8,000	8,000	21,000		
9+12+12		8,500	11,500	11,500			9,000	12,000	12,000		
9+12+18		8,000	11,000	15,000			8,500	11,500	16,000		
9+18+18		8,000	14,000	14,000			8,500	14,500	14,500		
12+12+12		11,333	11,333	11,333			12,000	12,000	12,000		
12+12+18		11,000	11,000	14,000			12,000	12,000	15,000		
12+18+18		9,333	13,333	13,333			10,000	14,500	14,500		
12+12+24		8,000	8,000	20,000			9,000	9,000	21,000		
9+9+9+9	4-Zone	9,000	9,000	9,000	9,000		9,500	9,500	9,500	9,500	
9+9+9+12		8,500	8,500	8,500	11,500		9,000	9,000	9,000	12,000	
9+9+9+18		8,000	8,000	8,000	14,000		8,500	8,500	8,500	14,000	
9+9+12+12		8,000	8,000	10,500	10,500		8,500	8,500	11,000	11,000	
9+9+12+18		7,500	7,500	9,000	14,000		8,000	8,000	9,500	14,500	
9+12+12+12		7,000	10,000	10,000	10,000		8,000	10,500	10,500	10,500	
12+12+12+12		9,500	9,500	9,500	9,500		10,000	10,000	10,000	10,000	
36K		Zone 1	Zone 2	Zone 3	Zone 4	Zone 5	Zone 1	Zone 2	Zone 3	Zone 4	Zone 5
9+18	2-Zone	9,500	18,000				10,000	18,000			
9+24		9,500	24,000				10,000	25,000			
12+12		12,500	12,500				13,000	13,000			
12+18		12,000	18,000				13,000	19,000			
12+24		12,000	24,000				10,000	25,000			
18+18		18,500	18,500				19,000	19,000			
18+24		17,500	22,500				18,000	23,000			
24+24		21,000	21,000				22,000	22,000			
9+9+9	3-Zone	9,500	9,500	9,500			11,000	11,000	11,000		
9+9+12		9,500	9,500	12,000			10,000	10,000	13,000		
9+9+18		9,500	9,500	18,000			10,000	10,000	19,000		
9+9+24		9,000	9,000	22,500			9,500	9,500	23,500		
9+12+12		9,500	12,500	12,500			10,000	10,000	13,000		
9+12+18		9,000	12,000	18,000			9,500	9,500	19,000		
9+12+24		9,000	12,000	21,500			9,500	12,500	22,000		
9+18+18		9,000	18,000	18,000			9,500	18,500	18,500		
9+18+24		8,500	15,500	21,000			9,000	16,000	21,500		
9+24+24		8,000	20,000	20,000			8,500	21,000	21,000		
12+12+12		12,000	12,000	12,000			13,000	13,000	13,000		
12+12+18		12,000	12,000	17,000			12,500	12,500	18,000		
12+12+24		11,000	11,000	22,000			11,500	11,500	23,000		
12+18+18		11,000	16,500	16,500			11,500	17,000	17,000		
12+18+24		10,500	15,500	21,500			11,000	16,000	22,000		
12+24+24		10,000	20,000	20,000			11,000	20,500	20,500		
18+18+18		16,000	16,000	16,000			16,500	16,500	16,500		
18+18+24		15,000	15,000	20,000			15,500	15,500	21,000		
9+9+9+9	4-Zone	9,250	9,250	9,250	9,250		9,500	9,500	9,500	9,500	
9+9+9+12		9,000	9,000	9,000	12,000		9,500	9,500	9,500	12,500	
9+9+9+18		9,000	9,000	9,000	17,000		9,500	9,500	9,500	17,500	
9+9+9+24		8,500	8,500	8,500	20,500		9,000	9,000	9,000	21,000	
9+9+12+12		9,000	9,000	12,000	12,000		9,500	9,500	13,000	13,000	
9+9+12+18		9,000	9,000	11,000	17,000		9,500	9,500	11,500	17,500	
9+9+12+24		8,500	8,500	10,500	20,500		9,000	9,000	11,100	21,000	
9+9+18+18		8,500	8,500	15,500	15,500		9,000	9,000	16,000	16,000	
9+9+18+24		8,000	8,000	14,500	20,000		8,500	8,500	15,000	20,000	
9+12+12+12		9,000	12,000	12,000	12,000		9,500	12,500	12,500	12,500	
9+12+12+18		9,000	11,000	11,000	16,000		9,500	11,500	11,500	16,500	
9+12+12+24		8,500	10,000	10,000	20,000		9,000	10,500	10,500	20,500	
9+12+18+18		8,500	10,000	15,000	15,000		9,000	10,500	15,500	15,500	
9+18+18+18		8,000	14,000	14,000	14,000		8,500	14,500	14,500	14,500	
12+12+12+12		12,000	12,000	12,000	12,000		12,500	12,500	12,500	12,500	
12+12+12+18		11,000	11,000	11,000	16,000		11,500	11,500	11,500	16,500	
12+12+12+24		10,000	10,000	10,000	20,000		10,500	10,500	10,500	20,500	
12+12+18+18		10,000	10,000	15,000	15,000		10,500	10,500	15,500	15,500	

APPLICATION DATA (CONTINUED)

Size	No. of Zones	Cooling Capacity (Btu/h)					Heating Capacity (Btu/h)				
48K		Zone 1	Zone 2	Zone 3	Zone 4	Zone 5	Zone 1	Zone 2	Zone 3	Zone 4	Zone 5
9+18	2-Zone	9,500	18,000				10,000	18,000			
9+24		9,500	24,000				10,000	25,000			
12+12		12,500	12,500				13,000	13,000			
12+18		12,000	18,000				13,000	19,000			
12+24		12,000	24,000				10,000	25,000			
18+18		18,500	18,500				19,000	19,000			
18+24		17,500	22,500				18,000	23,000			
24+24		21,000	21,000				22,000	22,000			
9+9+9	3-Zone	9,500	9,500	9,500			11,000	11,000	11,000		
9+9+12		9,500	9,500	12,000			10,000	10,000	13,000		
9+9+18		9,500	9,500	18,000			10,000	10,000	19,000		
9+9+24		9,000	9,000	22,500			9,500	9,500	23,500		
9+12+12		9,500	12,500	12,500			10,000	10,000	13,000		
9+12+18		9,000	12,000	18,000			9,500	9,500	19,000		
9+12+24		9,000	12,000	21,500			9,500	12,500	22,000		
9+18+18		9,000	18,000	18,000			9,500	18,500	18,500		
9+18+24		8,500	15,500	21,000			9,000	16,000	21,500		
9+24+24		8,000	20,000	20,000			8,500	21,000	21,000		
12+12+12		12,000	12,000	12,000			13,000	13,000	13,000		
12+12+18		12,000	12,000	17,000			12,500	12,500	18,000		
12+12+24		11,000	11,000	22,000			11,500	11,500	23,000		
12+18+18		11,000	16,500	16,500			11,500	17,000	17,000		
12+18+24		10,500	15,500	21,500			11,000	16,000	22,000		
12+24+24		10,000	20,000	20,000			11,000	20,500	20,500		
18+18+18		16,000	16,000	16,000			16,500	16,500	16,500		
18+18+24		15,000	15,000	20,000			15,500	15,500	21,000		
9+9+9+9	4-Zone	9,250	9,250	9,250	9,250		9,500	9,500	9,500	9,500	
9+9+9+12		9,000	9,000	9,000	12,000		9,500	9,500	9,500	12,500	
9+9+9+18		9,000	9,000	9,000	17,000		9,500	9,500	9,500	17,500	
9+9+9+24		8,500	8,500	8,500	20,500		9,000	9,000	9,000	21,000	
9+9+12+12		9,000	9,000	12,000	12,000		9,500	9,500	13,000	13,000	
9+9+12+18		9,000	9,000	11,000	17,000		9,500	9,500	11,500	17,500	
9+9+12+24		8,500	8,500	10,500	20,500		9,000	9,000	11,100	21,000	
9+9+18+18		8,500	8,500	15,500	15,500		9,000	9,000	16,000	16,000	
9+9+18+24		8,000	8,000	14,500	20,000		8,500	8,500	15,000	20,000	
9+12+12+12		9,000	12,000	12,000	12,000		9,500	12,500	12,500	12,500	
9+12+12+18		9,000	11,000	11,000	16,000		9,500	11,500	11,500	16,500	
9+12+12+24		8,500	10,000	10,000	20,000		9,000	10,500	10,500	20,500	
9+12+18+18		8,500	10,000	15,000	15,000		9,000	10,500	15,500	15,500	
9+18+18+18		8,000	14,000	14,000	14,000		8,500	14,500	14,500	14,500	
12+12+12+12		12,000	12,000	12,000	12,000		12,500	12,500	12,500	12,500	
12+12+12+18		11,000	11,000	11,000	16,000		11,500	11,500	11,500	16,500	
12+12+12+24		10,000	10,000	10,000	20,000		10,500	10,500	10,500	20,500	
12+12+18+18		10,000	10,000	15,000	15,000		10,500	10,500	15,500	15,500	
9+9+9+9+9	5-Zone	9,000	9,000	9,000	9,000	9,000	9,500	9,500	9,500	9,500	9,500
9+9+9+9+12		9,000	9,000	9,000	9,000	12,000	9,500	9,500	9,500	9,500	13,000
9+9+9+9+18		8,500	8,500	8,500	8,500	16,000	9,000	9,000	9,000	9,000	16,500
9+9+9+9+24		7,750	7,750	7,750	7,750	19,500	8,000	8,000	8,000	8,000	20,000
9+9+9+12+12		9,000	9,000	9,000	11,500	11,500	9,500	9,500	9,500	12,000	12,000
9+9+9+12+18		8,000	8,000	8,000	11,000	16,000	8,500	8,500	8,500	11,500	16,500
9+9+9+18+18		8,000	8,000	8,000	11,000	16,000	8,500	8,500	8,500	16,500	16,500
9+9+12+12+12		8,500	8,500	11,000	11,000	11,000	9,000	9,000	12,000	12,000	12,000
9+9+12+12+18		8,500	8,500	10,000	10,000	15,000	8,500	8,500	10,500	10,500	15,500
9+12+12+12+12		8,000	11,000	11,000	11,000	11,000	8,500	11,500	11,500	11,500	11,500
9+12+12+12+18		7,500	10,000	10,000	10,000	14,500	8,000	10,500	10,500	10,500	15,000
12+12+12+12+12		10,500	10,500	10,500	10,500	10,500	11,000	11,000	11,000	11,000	11,000

APPLICATION DATA (USING 40MHHQ HIGH WALL)

Size	No. of Zones	Cooling Capacity (Btu/h)					Heating Capacity (Btu/h)				
18K		Zone 1	Zone 2	Zone 3	Zone 4	Zone 5	Zone 1	Zone 2	Zone 3	Zone 4	Zone 5
9+9	2-Zone	8,000	8,000				8,500	8,500			
9+12		8,000	10,500				8,000	11,000			
12+12		10,000	10,000				10,000	10,000			
24K		Zone 1	Zone 2	Zone 3	Zone 4	Zone 5	Zone 1	Zone 2	Zone 3	Zone 4	Zone 5
9+9	2-Zone	8,500	8,500				9,000	9,000			
9+12		8,500	12,000				9,000	13,000			
9+18		7,400	16,600				800	18,000			
12+12		12,000	12,000				13,000	13,000			
12+18		10,000	15,000				11,200	16,800			
18+18		14,000	14,000				15,000	15,000			
9+9+9	3-Zone	8,000	8,000	8,000			8,500	8,500	8,500		
9+9+12		7,600	7,600	11,667			8,500	8,500	12,000		
9+9+18		7,300	7,300	13,333			8,000	8,000	14,000		
9+12+12		7,500	10,000	10,000			7,500	11,000	11,000		
12+12+12		9,667	9,667	9,667			10,667	10,667	10,667		
30K		Zone 1	Zone 2	Zone 3	Zone 4	Zone 5	Zone 1	Zone 2	Zone 3	Zone 4	Zone 5
9+9	2-Zone	9,000	9,000				9,500	9,500			
9+12		8,500	12,000				9,000	13,000			
9+18		8,500	17,500				9,000	18,000			
9+24		8,000	24,000				9,000	25,000			
12+12		12,000	12,000				13,000	13,000			
12+18		12,000	18,000				13,000	18,000			
12+24		11,000	23,000				12,000	24,000			
18+18		16,500	16,500				17,000	17,000			
9+9+9	3-Zone	8,300	8,300	8,300			8,700	8,700	8,700		
9+9+12		8,000	8,000	12,000			8,500	8,500	12,500		
9+9+18		7,000	7,000	16,000			7,500	7,500	17,000		
9+9+24		7,000	7,000	20,000			7,300	7,300	22,000		
9+12+12		7,500	11,500	11,500			8,000	12,000	12,000		
9+12+18		7,000	11,000	15,000			7,500	11,500	16,000		
9+18+18		7,000	14,000	14,000			7,500	14,500	14,500		
12+12+12		11,333	11,333	11,333			12,000	12,000	12,000		
12+12+18		11,000	11,000	14,000			12,000	12,000	15,000		
12+18+18		9,333	13,333	13,333			10,000	14,500	14,500		
12+12+24		8,000	8,000	20,000			9,000	9,000	21,000		
9+9+9+9	4-Zone	8,000	8,000	8,000	8,000		8,500	8,500	8,500	8,500	
9+9+9+12		7,500	7,500	7,500	11,500		8,000	8,000	8,000	12,000	
9+9+9+18		7,000	7,000	7,000	14,000		7,500	7,500	7,500	14,000	
9+9+12+12		7,000	7,000	10,500	10,500		7,500	7,500	11,000	11,000	
9+9+12+18		6,600	6,600	9,000	14,000		7,000	7,000	9,500	14,500	
9+12+12+12		6,300	10,000	10,000	10,000		7,000	10,500	10,500	10,500	
12+12+12+12		9,500	9,500	9,500	9,500		10,000	10,000	10,000	10,000	
36K		Zone 1	Zone 2	Zone 3	Zone 4	Zone 5	Zone 1	Zone 2	Zone 3	Zone 4	Zone 5
9+18	2-Zone	8,500	18,000				9,000	18,000			
9+24		8,500	24,000				9,000	25,000			
12+12		12,500	12,500				13,000	13,000			
12+18		12,000	18,000				13,000	19,000			
12+24		12,000	24,000				10,000	25,000			
18+18		18,500	18,500				19,000	19,000			
18+24		17,500	22,500				18,000	23,000			
24+24		21,000	21,000				22,000	22,000			
9+9+9	3-Zone	8,500	8,500	8,500			10,000	10,000	10,000		
9+9+12		8,500	8,500	12,000			9,000	9,000	13,000		
9+9+18		8,500	8,500	18,000			9,000	9,000	19,000		
9+9+24		8,000	8,000	22,500			8,500	8,500	23,500		
9+12+12		8,500	12,500	12,500			9,000	13,000	13,000		
9+12+18		8,000	12,000	18,000			8,500	13,000	19,000		
9+12+24		8,000	12,000	21,500			8,500	12,500	22,000		
9+18+18		8,000	18,000	18,000			8,500	18,500	18,500		
9+18+24		7,500	15,500	21,000			8,000	16,000	21,500		
9+24+24		7,000	20,000	20,000			7,500	21,000	21,000		
12+12+12		12,000	12,000	12,000			13,000	13,000	13,000		
12+12+18		12,000	12,000	17,000			12,500	12,500	18,000		
12+12+24		11,000	11,000	22,000			11,500	11,500	23,000		
12+18+18		11,000	16,500	16,500			11,500	17,000	17,000		
12+18+24		10,500	15,500	21,500			11,000	16,000	22,000		
12+24+24		10,000	20,000	20,000			11,000	20,500	20,500		
18+18+18		16,000	16,000	16,000			16,500	16,500	16,500		
18+18+24		15,000	15,000	20,000			15,500	15,500	21,000		
9+9+9+9	4-Zone	8,250	8,250	8,250	8,250		8,500	8,500	8,500	8,500	
9+9+9+12		8,000	8,000	8,000	12,000		8,500	8,500	8,500	12,500	
9+9+9+18		8,000	8,000	8,000	17,000		8,500	8,500	8,500	17,500	
9+9+9+24		7,500	7,500	7,500	20,500		8,000	8,000	8,000	21,000	
9+9+12+12		8,000	8,000	12,000	12,000		8,500	8,500	13,000	13,000	
9+9+12+18		8,000	8,000	11,000	17,000		8,500	8,500	11,500	17,500	
9+9+12+24		7,500	7,500	10,500	20,500		8,000	8,000	11,100	21,000	
9+9+18+18		7,500	7,500	15,500	15,500		8,000	8,000	16,000	16,000	
9+9+18+24		7,000	8,000	14,500	20,000		7,500	7,500	15,000	20,000	
9+12+12+12		8,000	12,000	12,000	12,000		8,500	12,500	12,500	12,500	
9+12+12+18		8,000	11,000	11,000	16,000		8,500	11,500	11,500	16,500	
9+12+12+24		7,500	10,000	10,000	20,000		8,000	10,500	10,500	20,500	
9+12+18+18		7,500	10,000	15,000	15,000		8,000	10,500	15,500	15,500	
9+18+18+18		8,000	14,000	14,000	14,000		7,500	14,500	14,500	14,500	
12+12+12+12		12,000	12,000	12,000	12,000		12,500	12,500	12,500	12,500	
12+12+12+18		11,000	11,000	11,000	16,000		11,500	11,500	11,500	16,500	
12+12+12+24		10,000	10,000	10,000	20,000		10,500	10,500	10,500	20,500	
12+12+18+18		10,000	10,000	15,000	15,000		10,500	10,500	15,500	15,500	

APPLICATION DATA (USING 40MHHQ HIGH WALL)(CONT)

Size	No. of Zones	Cooling Capacity (Btu/h)					Heating Capacity (Btu/h)				
48K		Zone 1	Zone 2	Zone 3	Zone 4	Zone 5	Zone 1	Zone 2	Zone 3	Zone 4	Zone 5
9+18	2−Zone	8,500	18,000				9,000	18,000			
9+24		8,500	24,000				9,000	25,000			
12+12		12,500	12,500				13,000	13,000			
12+18		12,000	18,000				13,000	19,000			
12+24		12,000	24,000				10,000	25,000			
18+18		18,500	18,500				19,000	19,000			
18+24		17,500	22,500				18,000	23,000			
24+24		21,000	21,000				22,000	22,000			
9+9+9	3−Zone	8,500	8,500	8,500			10,000	10,000	10,000		
9+9+12		8,500	8,500	12,000			9,000	9,000	13,000		
9+9+18		8,500	8,500	18,000			9,000	9,000	19,000		
9+9+24		8,000	8,000	22,500			8,500	8,500	23,500		
9+12+12		8,500	12,500	12,500			9,000	13,000	13,000		
9+12+18		8,000	12,000	18,000			8,500	13,000	19,000		
9+12+24		8,000	12,000	21,500			8,500	12,500	22,000		
9+18+18		8,000	18,000	18,000			8,500	18,500	18,500		
9+18+24		7,500	15,500	21,000			8,000	16,000	21,500		
9+24+24		7,000	20,000	20,000			7,500	21,000	21,000		
12+12+12		12,000	12,000	12,000			13,000	13,000	13,000		
12+12+18		12,000	12,000	17,000			12,500	12,500	18,000		
12+12+24		11,000	11,000	22,000			11,500	11,500	23,000		
12+18+18		11,000	16,500	16,500			11,500	17,000	17,000		
12+18+24		10,500	15,500	21,500			11,000	16,000	22,000		
12+24+24		10,000	20,000	20,000			11,000	20,500	20,500		
18+18+18		16,000	16,000	16,000			16,500	16,500	16,500		
18+18+24		15,000	15,000	20,000			15,500	15,500	21,000		
9+9+9+9	4−Zone	8,250	8,250	8,250	8,250		8,500	8,500	8,500	8,500	
9+9+9+12		8,000	8,000	8,000	12,000		8,500	8,500	8,500	12,500	
9+9+9+18		8,000	8,000	8,000	17,000		8,500	8,500	8,500	17,500	
9+9+9+24		7,500	7,500	7,500	20,500		8,000	8,000	8,000	21,000	
9+9+12+12		8,000	8,000	12,000	12,000		8,500	8,500	13,000	13,000	
9+9+12+18		8,000	8,000	11,000	17,000		8,500	8,500	11,500	17,500	
9+9+12+24		7,500	7,500	10,500	20,500		8,000	8,000	11,100	21,000	
9+9+18+18		7,500	7,500	15,500	15,500		8,000	8,000	16,000	16,000	
9+9+18+24		7,000	7,000	14,500	20,000		7,500	7,500	15,000	20,000	
9+12+12+12		8,000	12,000	12,000	12,000		8,500	12,500	12,500	12,500	
9+12+12+18		8,000	11,000	11,000	16,000		8,500	11,500	11,500	16,500	
9+12+12+24		7,500	10,000	10,000	20,000		8,000	10,500	10,500	20,500	
9+12+18+18		7,500	10,000	15,000	15,000		8,000	10,500	15,500	15,500	
9+18+18+18		7,000	14,000	14,000	14,000		7,500	14,500	14,500	14,500	
12+12+12+12		12,000	12,000	12,000	12,000		12,500	12,500	12,500	12,500	
12+12+12+18		11,000	11,000	11,000	16,000		11,500	11,500	11,500	16,500	
12+12+12+24		10,000	10,000	10,000	20,000		10,500	10,500	10,500	20,500	
12+12+18+18		10,000	10,000	15,000	15,000		10,500	10,500	15,500	15,500	
9+9+9+9+9	5−Zone	8,000	8,000	8,000	8,000	8,000	8,500	8,500	8,500	8,500	8,500
9+9+9+9+12		8,000	8,000	8,000	8,000	12,000	8,500	8,500	8,500	8,500	13,000
9+9+9+9+18		7,500	7,500	7,500	7,500	16,000	8,000	8,000	8,000	8,000	16,500
9+9+9+9+24		6,750	6,750	6,750	6,750	19,500	7,000	7,000	7,000	7,000	20,000
9+9+9+12+12		8,000	8,000	8,000	11,500	11,500	8,500	8,500	8,500	12,000	12,000
9+9+9+12+18		7,000	7,000	7,000	11,000	16,000	7,500	7,500	7,500	11,500	16,500
9+9+9+18+18		7,000	7,000	7,000	11,000	16,000	7,500	7,500	7,500	16,500	16,500
9+9+12+12+12		7,500	7,500	11,000	11,000	11,000	8,000	8,000	12,000	12,000	12,000
9+9+12+12+18		7,500	7,500	10,000	10,000	15,000	7,500	7,500	10,500	10,500	15,500
9+12+12+12+12		7,000	11,000	11,000	11,000	11,000	7,500	11,500	11,500	11,500	11,500
9+12+12+12+18		6,500	10,000	10,000	10,000	14,500	7,000	10,500	10,500	10,500	15,000
12+12+12+12+12		10,500	10,500	10,500	10,500	10,500	11,000	11,000	11,000	11,000	11,000

Unit Mounting (Outdoor)

Refer to the unit's installation instructions for further details.

Support – A location which can bear the weight of outdoor unit. Refer to the Physical Data section for weights, and base dimensional drawings.

Unit Leveling – For reliable operation, units should be level in all planes.

Clearances – Minimum clearances, as shown in Fig. 9, must be provided for airflow. The outdoor units are designed for free−blow applications. Air inlets and outlets should not be restricted.

Unit location – A location which is convenient to installation and not exposed to strong wind.

NOTE: **Do not install the indoor or outdoor units in a location with special environmental conditions. For those applications, contact your sales representative.**

System Operating Conditions

OPERATING RANGE (Min / Max °F (°C))		
	Cooling	Heating
Outdoor DB	−13 / 122 (−25 / 50)	−22 / 86 (−30 / 30)

Metering Devices

The outdoor unit has multiple electronic expansion valves to manage the refrigerant flow to the different indoor fan coils connected to that unit.

Refrigerant Lines

General Guidelines:

1. The outdoor units are shipped with a full charge of R−410A refrigerant. All charges, line sizing, and capacities are based on runs of 25 ft. (7.6 m). For runs over 25 ft. (7.6m), consult long−line section on this page for proper charge adjustments.
2. Refrigerant lines should not be buried in the ground. If it is necessary to bury the lines, do not bury more than 36 inches (914 mm). Provide a minimum of 6 inch (152 mm) vertical rise to the service valves to prevent refrigerant migration.
3. Both lines must be insulated. Use a minimum of ½−inch (12.7 mm) thick insulation. Closed−cell insulation is recommended in all long−line applications.
4. Special consideration should be given to isolating the interconnecting tubing from the building structure. Isolate the tubing so vibration or noise does not transmit into the structure.

Long Line Applications:

- No change in line sizing is required.

Unit Size	Zones	Charge oz. (kg.)	Additional Charge Required After ft. (m)	Additional Charge oz./ft. (g/m)	Total Maximum Piping Length ft. (m.)
18	2	70.55 (2.0)	49 (15)	0.16 (15)	131 (40)
24	3	98.76 (2.8)	74 (22.5)	0.16 (15)	197 (60)
30	4	105.82 (3.0)	98 (30)	0.16 (15)	263 (80)
36	4	162.26 (4.6)	123 (37.5)	0.16 (15)	328 (100)
48	5	162.26 (4.6)	123 (37.5)	0.16 (15)	328 (100)

NOTE: **Additional Refrigerant Calculation Sum Total Liquid Pipe ft. (m) Additional Charge Required After ft. (m.) x Additional Charge oz./ft. (g/m) 0.16 (15).**

NOTE: **If the calculation results in a negative number, no additional refrigerant is required.**

Drain Connections

Install drains that meet the local sanitation codes.

Wiring

All wires must be sized per NEC (National Electrical Code) or CEC (Canadian Electrical Code) and local codes. Use Electrical Data table MCA (minimum circuit amps) and MOCP (maximum over current protection) to correctly size the wires and the disconnect fuse or breakers respectively.

Recommended Connection Method for Power and Communication Wiring:

The main power is supplied to the outdoor unit. The field supplied 14/3 stranded wire with ground with a 600 volt insulation rating, power/communication wiring from the outdoor unit to indoor unit consists of four (4) wires and provides the power for the indoor unit. Two wires are line voltage AC power, one is communication wiring (S) and the other is a ground wire. Wiring between indoor and outdoor unit is polarity sensitive. The use of BX wire is NOT recommended.

If installed in a high Electromagnetic field (EMF) area and communication issues exists, a 14/2 stranded shielded wire can be used to replace L2 and (S) between outdoor unit and indoor unit landing the shield onto ground in the outdoor unit only.

⚠ CAUTION

EQUIPMENT DAMAGE HAZARD

Failure to follow this caution may result in equipment damage or improper operation.

Wires should be sized based on NEC and local codes.

⚠ CAUTION

EQUIPMENT DAMAGE HAZARD

Failure to follow this caution may result in equipment damage or improper operation.

Be sure to comply with local codes while running wire from the indoor unit to the outdoor unit.

Every wire must be connected firmly. Loose wiring may cause the terminal to overheat or result in unit malfunction. A fire hazard may also exist. Ensure all wiring is tightly connected.

No wire should touch the refrigerant tubing, compressor or any moving parts.

Disconnecting means must be provided and shall be located within sight and readily accessible from the air conditioner.

Connecting cable with conduit shall be routed through the hole in the conduit panel.

Control System

The 38MGR unit is equipped with a microprocessor control to operate the system and give optimum levels of comfort and operating efficiency. There are microprocessor boards and thermistors located in both the indoor and outdoor units. The thermistors monitor the system operation and control the operating mode.

Sequence of Operation

NOTE: **Simultaneous heating and cooling is not allowed.**

The Heating Mode is the priority in the system and controls the mode of operation for the rest of the indoor units connected to the same outdoor unit. If any unit in the system is set into Heating Mode the system switches to Heat. If any unit is setup in **COOLING**, while any unit in the system is setup as Heating, the ones on **COOLING** would enter in conflict mode and an error message would appear on the units set as **COOLING**.

All units must be set in cooling or fan mode for the system to cool. When a unit is set to **COOL**, **HEAT** or the **DRY** mode, the electronic expansion valve is first initialized (closed) and then is opened to a preset position.

Superheat heating for each fan coil (the ones that are energized) is monitored and the position of the electronic expansion valve is adjusted to ensure that each fan coil gets the appropriate amount of refrigerant to maintain the required superheat. In the **COOLING** mode, after the set point is satisfied, the electronic expansion valve remains open for a specified time to ensure the system pressures equalize. In the **HEATING** mode, after the set point is satisfied, the electronic expansion valve remains open to ensure proper oil flow back and keep low pressure.

When the system is set for **COOL**, **HEAT** or **DRY** mode, the compressor speed is varied by comparing the indoor air temperature with the set point and continuously adjusting the compressor speed (to keep the compressor running as long as possible) in an effort to maintain the greatest comfort possible.

The indoor fan can run in either the **MANUAL** or **AUTO** mode. When the fan is runs in the **AUTO** mode, the speed is determined by comparing the room temperature to the set point.

For High Walls and Floor Consoles Fan Coils, when the set point is satisfied, the fan speed is reduced. For Cassettes and Ducted Fan Coils when the set point is satisfied, the fan continues to run. The Fan Coils are not de−energized.

When the unit goes through the defrost cycle, the indoor fans are de−energized and the refrigerant is circulated through all the fan coils (even if they were off or on standby before the defrost cycle) to maximize the heat transfer surface area available for defrost operation.

⚠ WARNING

AUTO mode is recommended to be used on single zone applications **ONLY**, it is NOT recommended to be used on Multi−zone Applications.

Using AUTO changeover on Multi−zone applications could set an indoor unit on Standby, indicated as (−−) on the display, turning off this indoor unit until all the indoor units are on the same Mode (Cooling or Heating).

HEATING Mode is the priority in the system.

Simultaneous HEATING and COOLING is not allowed.

AIR FLOW DATA

OUTDOOR MULTI–ZONE					
SYSTEM SIZE	**18**	**24**	30	**36**	**48**
Outdoor (CFM)	1390	2130	2130	2130	3500

SOUND PRESSURE

OUTDOOR MULTI–ZONE						
SYSTEM SIZE		**18**	**24**	**30**	**36**	**48**
Outdoor Sound Pressure Level	**DB(A)**	62.4	63.4	62.3	63	64

SOUND POWER IN OCTAVE BANDS

	Frequency (Hz)	**63**	**125**	**250**	**500**	**1000**	**2000**	**4000**	**8000**
2 ZONE 18K	Cooling dB(A)	53.9	52.0	55.4	48.9	44.5	40.4	36.3	30.8
	Heating dB(A)	57.0	55.8	59.3	52.8	49.5	45.2	41.6	38.6
3 ZONE 24K	Cooling dB(A)	62.0	63.2	58.5	56.0	54.7	49.3	46.3	41.8
	Heating dB(A)	64.4	65.9	65.4	58.5	57.7	52.7	50.3	52.2
4 ZONE 30K	Cooling dB(A)	58.4	60.1	58.3	52.6	51.0	47.6	44.2	38.7
	Heating dB(A)	62.1	62.7	61.8	56.4	55.5	51.5	49.8	46.0
4 ZONE 36K	Cooling dB(A)	67.9	64.6	58.7	58.3	55.4	50.3	44.7	38.5
	Heating dB(A)	65.1	61.8	62.4	59.0	56.7	52.2	45.5	41.6
5 ZONE 48K	Cooling dB(A)	68.4	65.8	58.6	58.3	55.5	51.8	45.3	44.2
	Heating dB(A)	68.5	62.3	62.4	61.3	59.1	54.0	48.7	44.0

OUTDOOR UNIT SOUND PRESSURE TEST CONDITIONS

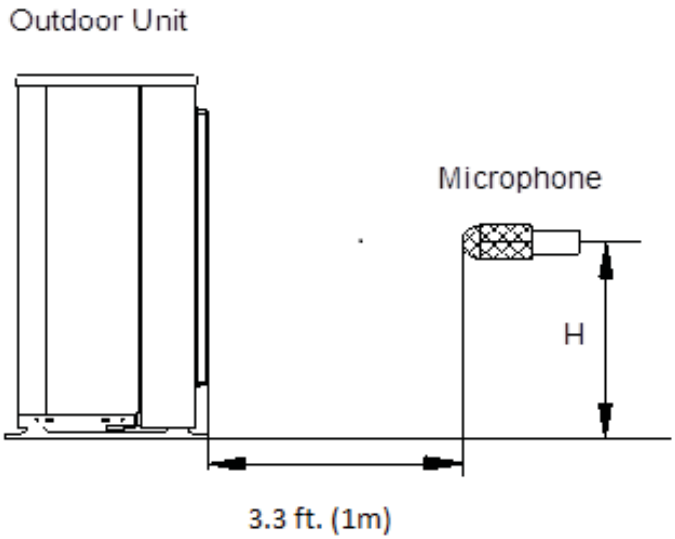

Fig. 11 − Outdoor Unit Sound Pressure Test Conditions

NOTE: **H=0.5 x Height of the outdoor unit.**

	INDOOR CONDITION		**OUTDOOR CONDITION**	
	DB	WB	DB	WB
Cooling	80.6F (27C)	66.2F (19C)	95F (35C)	75.2F (24C)
Heating	68F (20C)	59F (15C)	44.6F (7C)	42.8F (6C)

FAN AND MOTOR SPECIFICATIONS

			18K (208/230 V)	24K (208/230 V)	30K (208/230 V)	36K (208/230 V)	48K (208/230 V)
Outdoor	Material		AS	AS	AS	AS	AS
	Type		ZL490*151*12−3KN	ZL560*139*12−3KN	ZL560*139*12−3KN	ZL554*148*12−3KFN	ZL554*148*12−3KFN
	Diameter	inch	490	560	560	554	554
	Height	inch	151	139	139	148	148
Outdoor Fan Motor	Model		ZKFN−50−8−2	ZKFN−120−8−2	ZKFN−120−8−2	ZKFN−85−8−22	ZKFN−85−8−22
	Volts	V	208/230	208/230	208/230	208/230	208/230
	Phase		1	1	1	1	1
	Hertz	Hz	60	60	60	60	60
	FLA		0.74	0.9	1.3	1.0x2	1.0x2
	Rated HP	HP	0.07	0.16	0.16	0.11	0.11
	Output	W	50	120	120	85	85
	Type		DC	DC	DC	DC	DC
	Insulation class		A				
	Safe class		IPX4				
	Input	W	115	156	156	108	108
	Range of current	Amps	0.41±10%	1.34±10%	1.34±10%	0.92±10%	0.92±10%
	Rated current	Amps	0.41	1.34	1.34	0.92	0.92
	Capacitor	μF	No Capacitor				
	Speed	rev/ min	850~150	1000~150	1000~150	870~300	870~300
	Rated RPM	rev/ min	800	900	900	800	800
	Max. input	W	130	173	173	126	126

ELECTRICAL DATA

UNIT SIZE	SYSTEM VOLTAGE	OPERATING VOLTAGE	COMPRESSOR	OUTDOOR FAN			MCA	MOCP
	VOLT / PHASE / HZ	MAX / MIN*	RLA	FLA	HP	W		
18	208-230/1/60	253 / 187	10	0.74	0.07	50	18	25
24			15	0.9	0.16	120	25	35
30			19	1.3	0.16	120	30	45
36			21	1.0x2	0.11	85	35	50
48			21	1.0x2	0.11	85	35	50

*Permissible limits of the voltage range at which the unit will operate satisfactorily.

LEGEND

FLA — Full Load Amps
MCA — Minimum Circuit Amps
MOCP — Maximum Over Current Protection
RLA — Rated Load Amps

WIRING DIAGRAM

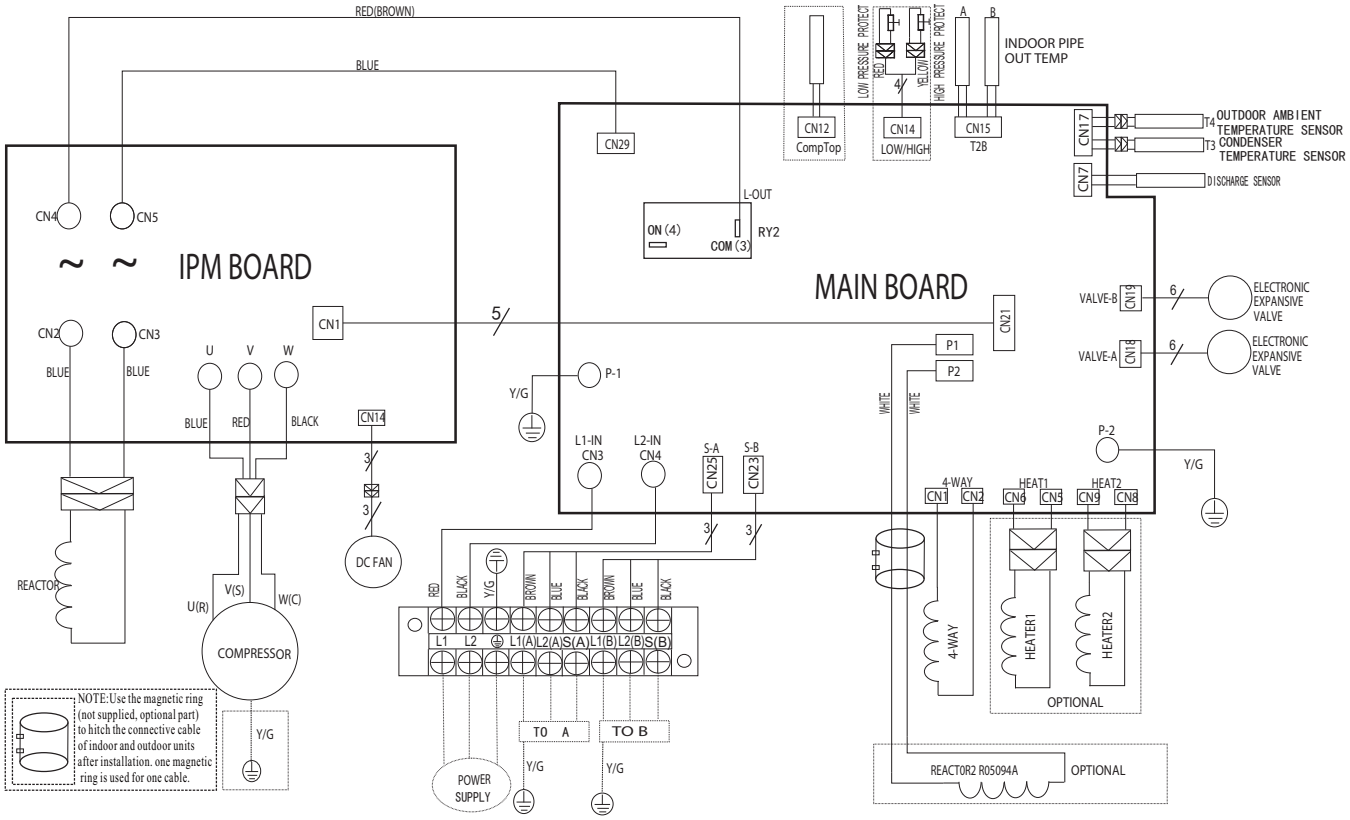

Fig. 12 − Wiring Diagram 18K − 2 Zone

OUTDOOR UNIT MAIN BOARD	
CODE	**PART NAME**
CN3~CN4	Input: 230VAC High voltage
CN23,CN25	Output: Pin1 (Connection of the high voltage)−−−“S”Pin2~Pin3 (230VAC High voltage)−−−“L1 & L2”
P1~P2	Output: Connection of the REACTOR
CN1~CN2	Output: 230VAC High voltage −−−−4 Way Valve
CN5~CN6	Output: 230VAC High voltage−−−−Compressor Crankcase Heater
CN8~CN9	Output: 230VAC High voltage−−−−Chassis Crankcase Heater
P−1~P−2	Connection to the earth
CN18, CN19	Output: Pin1−Pin4: Pulse waveform (0−12VDC), Pin5, Pin6 (12VDC)−−EEV
CN7	Input:Pin1 (0−5VDC), Pin2 (5VDC)−−Discharge Sensor
CN17	Input: Pin3, Pin4 (5VDC), Pin2 (0VDC), Pin1, Pin5 (0−5VDC)−Cond. and Ambient Temperature
CN15	Input: Pin1, Pin3, Pin5 (5VDC) Pin2, Pin4, Pin6 (0−5VDC)−−IDU Pipe Temp
CN14	Input: Pin2, Pin4 (0VDC), Pin1, Pin3 (0−5VDC)−−−H/L Pressure Switches
CN12	Input: Pin1 (0−5VDC), Pin2 (5VDC)−−Compressor Temp
CN29~L−OUT	Output: 230VAC High voltage−−to IPM Board
CN 21	Connect to IPM BOARD

OUTDOOR UNIT IPM BOARD	
CODE	**PART NAME**
CN4~CN5	Input: 230VAC High voltage−−−from the Main Board
CN2~CN3	Output: Connection of the REACTOR
U~V~W	Connection to compressor voltage among phases 0~200VAC
CN14	Connection to DC FAN
CN1	Connection to MAIN BOARD

WIRING DIAGRAMS (CONT)

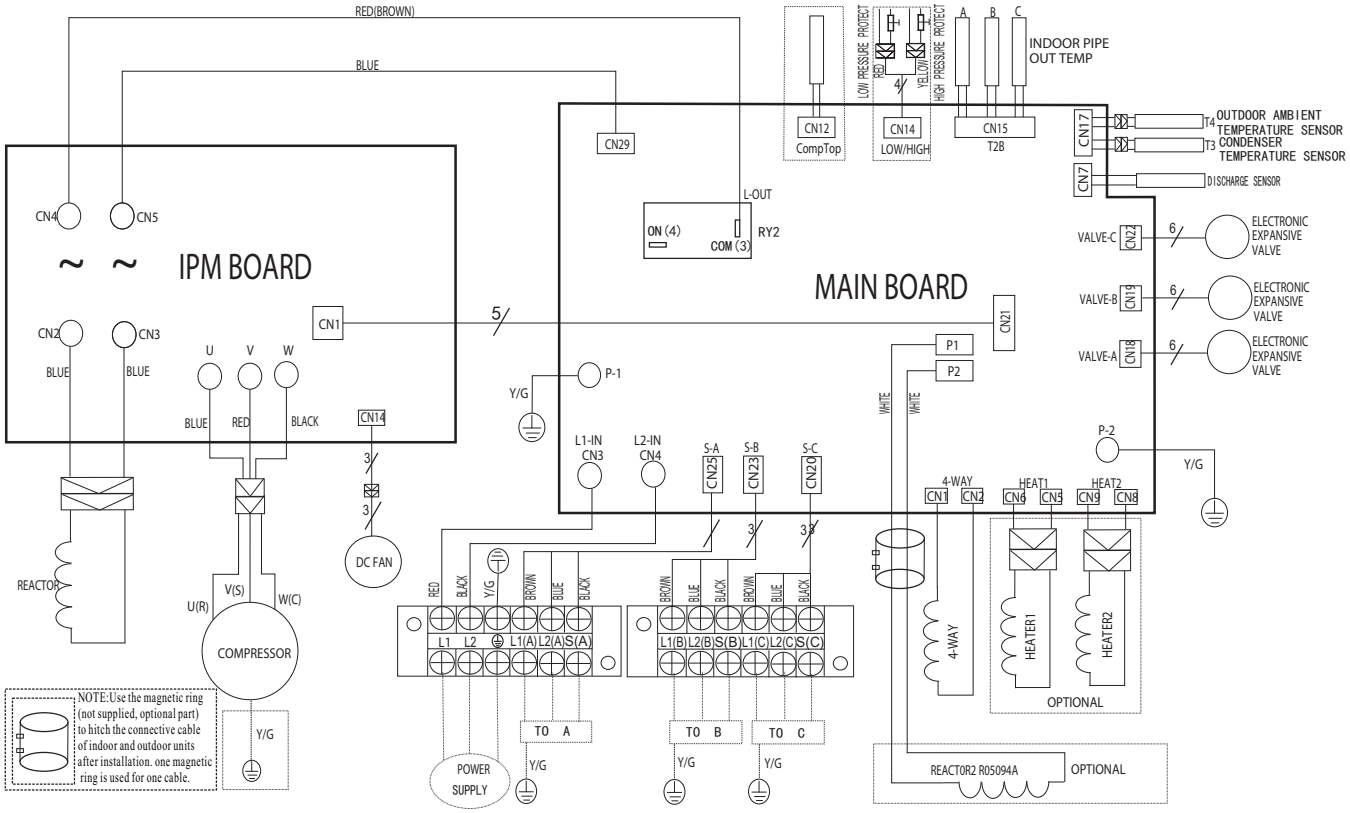

Fig. 13 − Wiring Diagrams 24K − 3 Zone Max

OUTDOOR UNIT MAIN BOARD	
CODE	**PART NAME**
CN3~CN4	Input: 230VAC High voltage
CN20,CN23,CN25	Output: Pin1 (Connection of the high voltage)−−−“S” Signal Pin2~Pin3 (230VAC High voltage)−−−IDU Power
P1~P2	Output: Connection of the REACTOR
CN1~CN2	Output: 230VAC High voltage−−−4 way Valve
CN5~CN6	Output: 230VAC High voltage−−−Compressor Crankcase Heater
CN8~CN9	Output: 230VAC High voltage−−−Chassis Crankcase Heater
P−1~P−2	Connection to the earth
CN18,CN19,CN22	Output: Pin1−Pin4: Pulse waveform (0−12VDC), Pin5, Pin6 (12VDC)−−−EEV
CN7	Input: Pin1 (0−5VDC), Pin2 (5VDC) −−− Discharge Temp
CN17	Input: Pin3, Pin4 (5VDC), Pin2 (0VDC), Pin1, Pin5 (0−5VDC)−Conditioner and Ambient Temperature
CN15	Input: Pin1, Pin3, Pin5 (5VDC) Pin2, Pin4, Pin6 (0−5VDC) −−− IDU Pipe Temp
CN14	Input: Pin2, Pin4 (0VDC), Pin1, Pin3 (0−5VDC) −−− H/L Pressure Switch
CN12	Input: Pin1 (0−5VDC), Pin2 (5VDC) −−− Compressor Temp
CN29~L−OUT	Output: 230VAC High voltage to IPM Board
Cn21	Connect to the IPM BOARD

OUTDOOR UNIT IPM BOARD	
CODE	**PART NAME**
CN4~CN5	Input: 230VAC High voltage
CN2~CN3	Output: Connection of the REACTOR
U~V~W	Connect to compressor voltage among phases 0~200VAC
CN14	Connect to the DC FAN
CN1	Connect to the MAIN BOARD

WIRING DIAGRAMS (CONT)

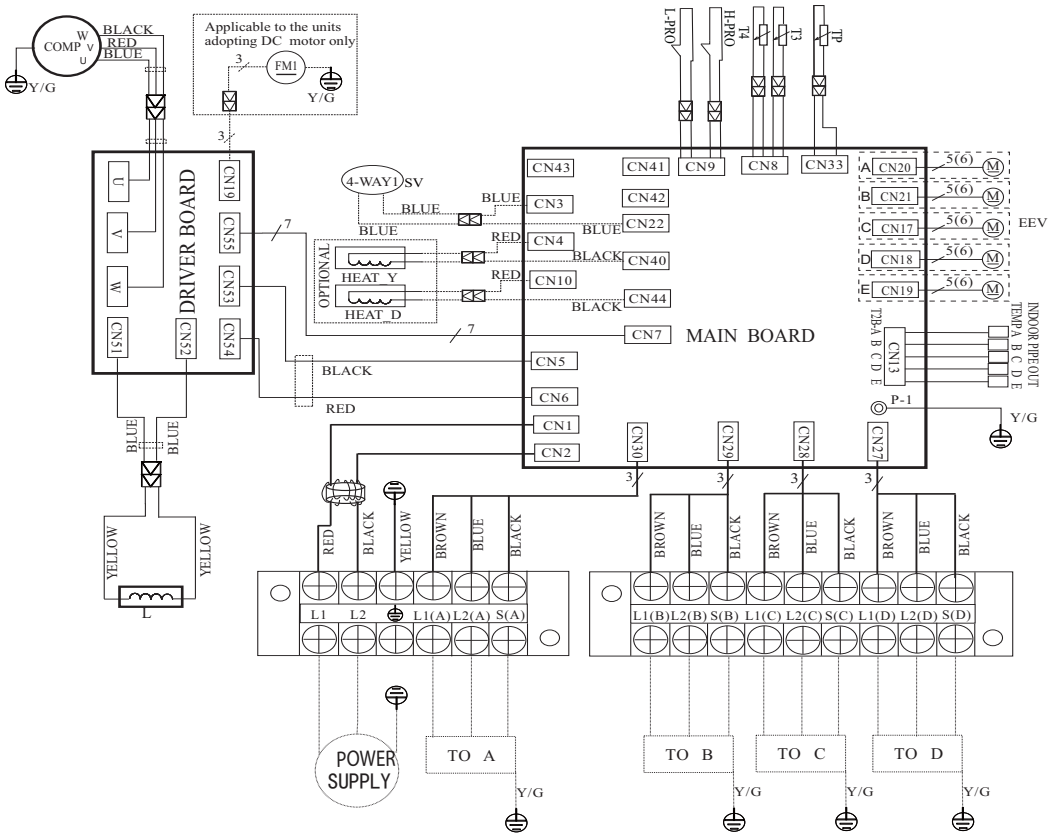

Fig. 14 − Wiring Diagrams 30K − 4 Zone Max

OUTDOOR UNIT MAIN BOARD	
CODE	**PART NAME**
CN1~CN2	Input: 230VAC High voltage
CN5~CN6	Output: 230VAC High voltage
P−1	Connection to the earth
CN10~CN44	Output: 230VAC High voltage Chassis Crankcase Heater
CN4~CN40	Output: 230VAC High voltage Compressor Crankcase Heater
CN3~CN22	Output:230VAC High voltage
CN17~CN21	Output: Pin1−Pin4: Pulse waveform (0−12VDC), Pin5, Pin6 (12VDC)
CN7	Output: Pin1 (12VDC), Pin2 (5VDC), Pin3 (EARTH)
CN27~CN30	Output: Pin 2~Pin 3 (230VAC High voltage) − IDU Power & ”S”
CN13	Pin1, Pin3, Pin5, Pin7, Pin9 (5VDC); Pin2, Pin4, Pin6, Pin8, Pin10 (0−5VDC)
CN33	Input: Pin1 (0−5VDC), Pin2 (5VDC) − Discharge Temp
CN8	Input: Pin3, Pin4 (5VDC), Pin2 (0VDC), Pin1, Pin5 (0−5VDC) T3 & T4
CN9	Input: Pin2, Pin4 (0VDC), Pin1, Pin3 (0−5VDC) H/L Pressure Switches

OUTDOOR UNIT PFC & IPM BOARD	
CODE	**PART NAME**
CN53~CN54	Input: 230VAC High voltage
CN55	Output: Pin1 (12VDC),Pin2 (5VDC),Pin3 (EARTH)
CN19	Pin1~Pin3: Connect to FAN voltage among phases 0~200VAC
U~V~W	Connect to compressor voltage among phases 0~200VAC
CN51~CN52	CN51~EARTH ,CN52~EARTH Output: 224−380VDC High voltage

CODE	PART NAME	CODE	PART NAME
COMP	COMPRESSOR	L	PFC INDUCTOR
CAP1	FAN MOTOR CAPACITOR	L−PRO	LOW PRESSURE SWITCH
HEAT	CRANKCASE HEATING	TP	EXHAUST TEMPERATURE SENSOR
FM1	OUTDOOR DC FAN	SV	4−WAY VALVE
FAN1	OUTDOOR AC FAN	T3	CONDENSER TEMPERATURE SENSOR
EEV	ELECTRONIC EXPANSION VALVE	T4	OUTDOOR AMBIENT TEMPERATURE SENSOR
H−PRO	HIGH PRESSURE SWITCH	TH	HEATSINK TEMPERATURE SENSOR

WIRING DIAGRAMS (CONT)

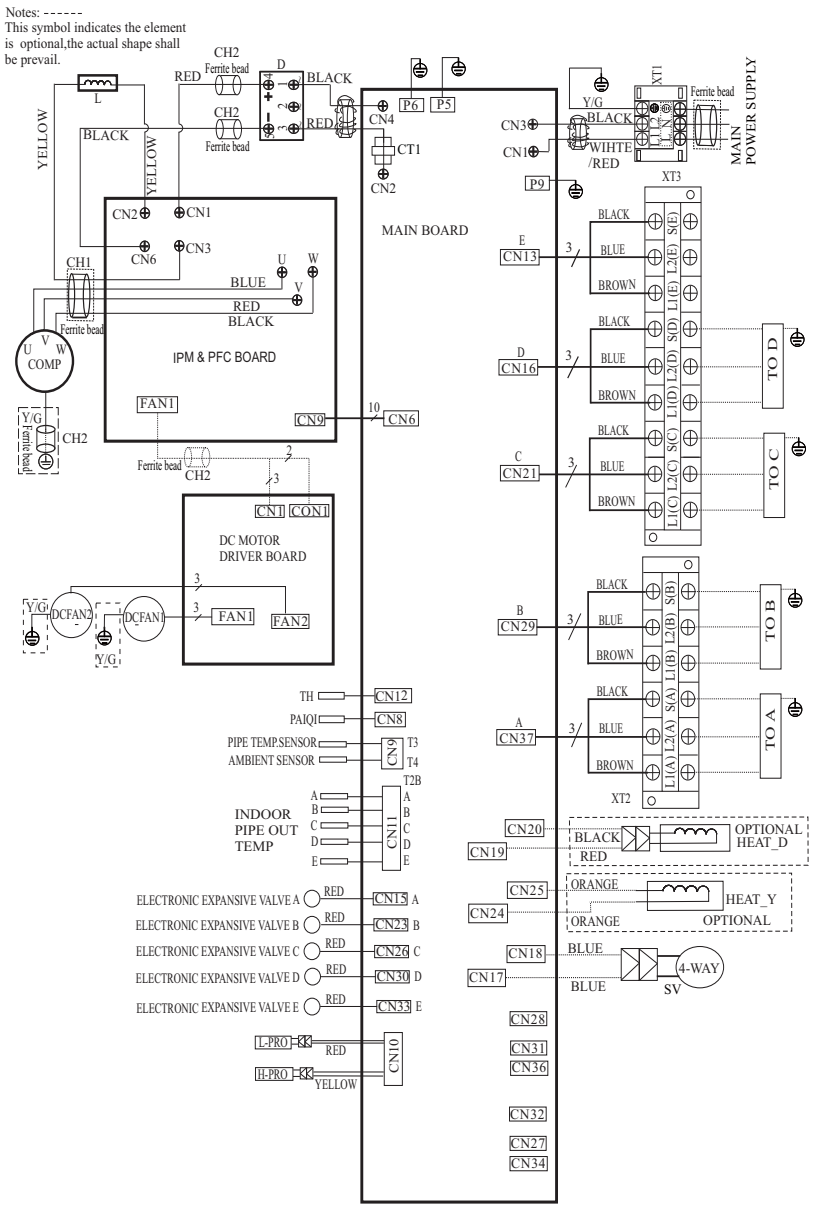

Fig. 15 − Wiring Diagrams 36K − 4 Zone Max

OUTDOOR UNIT MAIN BOARD	
CODE	**PART NAME**
CN1～CN3	Input: 230VAC High voltage
CN13, CN16, CN21, CN29, CN37	Output: Pin1(Connection of the high voltage) “S” Pin2～Pin3 (230VAC High voltage)“L1&L2”
P5, P6, P9	Connection to the earth
CN22	Output:−24VDC−24VDC
CN17～CN18	Output: 230VAC High voltage to 4 way valve
CN19～CN20	Output: 230VAC High voltage Compressor Crankcase Heater
CN24～CN25	Output: 230VAC High voltage Chassis Crankcase Heater
CN11	Input: Pin1, Pin3, Pin5, Pin7, Pin9 (5VDC) Pin2, Pin4, Pin6, Pin8, Pin10 (0−5VDC) indoor pipe out sensor
CN12	Input: Pin1 (0−5VDC), Pin2 (5VDC) Heatsink Temperature Sensor
CN8	Input: Pin1 (0−5VDC), Pin2 (5VDC) Compressor top sensor(PAIQI)
CN9	Input: Pin3, Pin4 (5VDC), Pin2 (0VDC), Pin1, Pin5 (0−5VDC) Pipe sensor and ambient sensor
CN15, CN23, CN26 CN30, CN33	Output: Pin1−Pin4: Pulse waveform (0−12VDC), Pin5, Pin6 (12VDC) to EEV
CN6	Communication: Pin1−Pin6: Pulse waveform (0−5VDC), Pin7, Pin9 (0VDC) Pin8 (0−5VDC), Pin10 (5VDC)−−to IPM & PFC board
CN2～CN4	Output: 230VAC High voltage to IPM & PFC Board
CN10	Input: Pin2, Pin4 (0VDC), Pin1, Pin3 (0−5VDC)−−H/L Pressure switch

OUTDOOR UNIT PFC and IPM BOARD	
CODE	**PART NAME**
CN1~CN6	Output: 224−380VDC High voltage
CN2~CN6	Output: 224−380VDC High voltage
CN3~CN6	Output: 224−380VDC High voltage
U~V~W	Connect to compressor voltage among phases 0~200VAC
CN9	Communication: Pin1−Pin6: Pulse waveform (0−5VDC), Pin7, Pin9 (0VDC), Pin8 (0−5VDC), Pin10 (5VDC) to the main board
FAN1	Output: Pin1~Pin2: High voltage (224−380VDC), Pin4 (0−15VDC) Pin5 (0−5.6VDC), Pin6: Pulse waveform (0−15VDC) to drive board

OUTDOOR UNIT DC MOTOR DRIVER BOARD	
CODE	**PART NAME**
CON1	Output: Pin1~Pin2:High voltage (224−380VDC)
CN1	Input:Pin4: Pulse waveform (0−15VDC), Pin3 (0−6.5VDC) Pin2 (0VDC), Pin1 (15VDC)
FAN1	Pin1−Pin3: Connect to FAN voltage among phases 0~200VAC
FAN2	Pin1−Pin3: Connect to FAN voltage among phases 0~200VAC

CODE	**PART NAME**
COMP	COMPRESSOR
CAP1,CAP2	FAN MOTOR CAPACITOR
CT1	AC CURRENT DETECTOR
D	DIODE MODULE
EEV	ELECTRONIC EXPANSION VALVE
FM1, FM2	OUTDOOR DC FAN
FAN1, FAN2	OUTDOOR AC FAN
HEAT	CRANKCASE HEATING
H−PRO	HIGH PRESSURE SWITCH
L	PFC INDUCTOR
L−PRO	LOW PRESSURE SWITCH
KM	AC CONTACTOR
SV	4−WAY VALVE
TP	EXHAUST TEMPERATURE SENSOR
T3	CONDENSER TEMPERATURE SENSOR
T4	OUTDOOR AMBIENT TEMPERATURE SENSOR
TH	HEATSINK TEMPERATURE SENSOR
PAIQI	COMPRESSOR TOP SENSOR(GAS PIPE)
CH1, CH2, CH3	FERRITE BEAD

WIRING DIAGRAMS (CONT)

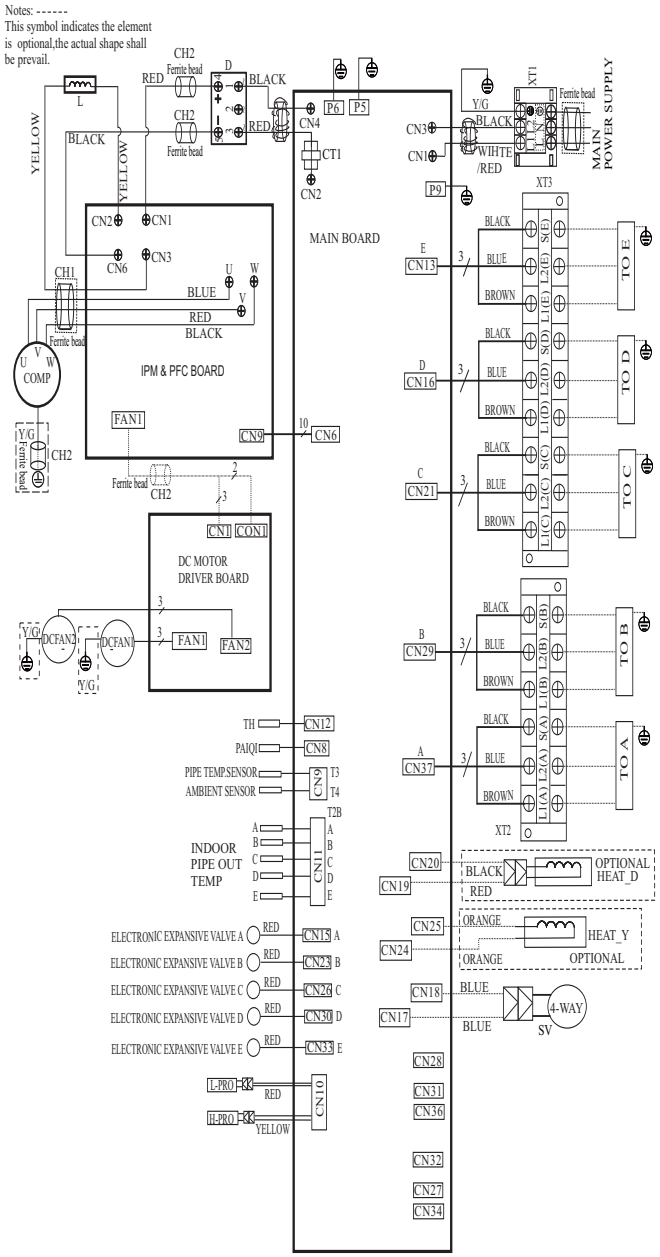

Fig. 16 − Wiring Diagrams 48K − 5 Zone Max

OUTDOOR UNIT MAIN BOARD	
CODE	**PART NAME**
CN1～CN3	Input: 230VAC High voltage
CN13,CN16,CN21,CN29,CN37	Output: Pin1 (Connection of the high voltage) “S” Pin2～Pin3 (230VAC High voltage) “L1&L2”
P5,P6,P9	Connection to the earth
CN22	Output:−24VDC−24VDC
CN17～CN18	Output: 230VAC High voltage to 4 way valve
CN19～CN20	Output: 230VAC High voltage Compressor Crankcase Heater
CN24～CN25	Output: 230VAC High voltage Chassis Crankcase Heater
CN11	Input: Pin1, Pin3, Pin5, Pin7, Pin9 (5VDC) Pin2, Pin4, Pin6, Pin8, Pin10 (0−5VDC) indoor pipe out sensor
CN12	Input: Pin1 (0−5VDC), Pin2 (5VDC) Heatsink Temperature Sensor
CN8	Input: Pin1 (0−5VDC), Pin2 (5VDC) Compressor top sensor (PAIQI)
CN9	Input: Pin3, Pin4 (5VDC), Pin2 (0VDC), Pin1, Pin5 (0−5VDC) Pipe sensor and ambient sensor
CN15,CN23,CN26 CN30,CN33	Output: Pin1−Pin4: Pulse waveform (0−12VDC), Pin5, Pin6 (12VDC) to EEV
CN6	Communication: Pin1−Pin6: Pulse waveform(0−5VDC), Pin7, Pin9 (0VDC) Pin8 (0−5VDC), Pin10 (5VDC)−−to IPM&PFC board
CN2～CN4	Output: 230VAC High voltage to IPM & PFC Board
CN10	Input: Pin2, Pin4 (0VDC), Pin1, Pin3 (0−5VDC)−−H/L Pressure switch

OUTDOOR UNIT PFC and IPM BOARD	
CODE	**PART NAME**
CN1~CN6	Output: 224−380VDC High voltage
CN2~CN6	Output: 224−380VDC High voltage
CN3~CN6	Output: 224−380VDC High voltage
U~V~W	Connect to compressor voltage among phases 0~200VAC
CN9	Communication: Pin1−Pin6: Pulse waveform (0−5VDC), Pin7, Pin9 (0VDC), Pin8 (0−5VDC), Pin10 (5VDC) to the main board
FAN1	Output: Pin1~Pin2: High voltage (224−380VDC) ,Pin4 (0−15VDC) Pin5 (0−5.6VDC), Pin6: Pulse waveform (0−15VDC) to drive board

OUTDOOR UNIT DC MOTOR DRIVER BOARD	
CODE	**PART NAME**
CON1	Output: Pin1~Pin2: High voltage (224−380VDC)
CN1	Input: Pin4: Pulse waveform (0−15VDC), Pin3 (0−6.5VDC) Pin2 (0VDC),Pin1 (15VDC)
FAN1	Pin1−Pin3:Connect to FAN voltage among phases 0~200VAC
FAN2	Pin1−Pin3:Connect to FAN voltage among phases 0~200VAC

CODE	**PART NAME**
COMP	COMPRESSOR
CAP1,CAP2	FAN MOTOR CAPACITOR
CT1	AC CURRENT DETECTOR
D	DIODE MODULE
EEV	ELECTRONIC EXPANSION VALVE
FM1, FM2	OUTDOOR DC FAN
FAN1,FAN2	OUTDOOR AC FAN
HEAT	CRANKCASE HEATING
H−PRO	HIGH PRESSURE SWITCH
L	PFC INDUCTOR
L−PRO	LOW PRESSURE SWITCH
KM	AC CONTACTOR
SV	4−WAY VALVE
TP	EXHAUST TEMPERATURE SENSOR
T3	CONDENSER TEMPERATURE SENSOR
T4	OUTDOOR AMBIENT TEMPERATURE SENSOR
TH	HEATSINK TEMPERATURE SENSOR
PAIQI	COMPRESSOR TOP SENSOR (GAS PIPE)
CH 1, CH 2, CH 3	FERRITE BEAD

PART 1 – GENERAL

1.01 System Description

A. Outdoor air−cooled split system compressor sections suitable for on−the−ground, rooftop, wall hung or balcony mounting. Units consist of a variable speed rotary compressor, an air−cooled coil, propeller−type draw−through outdoor fan, reversing valve, accumulator, electronic expansion valves, multiple service valves, and controls that allows multiple indoor units to be connected to the outdoor unit. Units discharge horizontally as shown on the contract drawings. Units function as the outdoor component of an air−to−air heat pump system.

B. Units are designed to be used in a refrigeration circuit matched to two, three, four, or five multi style heat pump fan coil units.

1.02 Agency Listings

A. Unit construction complies with ANSI/ASHRAE 15, latest revision, and with NEC.

B. Units are evaluated in accordance with UL standard 1995.

C. Units are listed in CEC directory.

D. Unit cabinet is capable of withstanding 500-hour salt spray test per Federal Test Standard no. 141 (method 6061).

E. Air-cooled condenser coils are leak tested at 550 psig.

1.03 Delivery, Storage, And Handling

Units are shipped in one piece and are stored and handled per the manufacturer's recommendations.

1.04 Warranty (For Inclusion By Specifying Engineer)

PART 2 – PRODUCTS

2.01 Equipment

A. General:

Factory assembled, single piece, air-cooled outdoor unit. Contained within the enclosure are the factory wiring, piping, controls, and compressor.

B. Unit Cabinet:

1. The unit cabinet is constructed of galvanized steel, bonderized and coated with baked-enamel finish on inside and outside.
2. The unit access panel is removable with the minimal screws and provides full access to the compressor, fan, and control components.
3. The outdoor compartment is isolated and has an acoustic lining to assure quiet operation.

C. Fans:

1. The outdoor fans are direct-drive propeller type, and discharge air horizontally. The fan draws air through the outdoor coil.
2. Outdoor fan motors are multi−speed, totally-enclosed, single phase motors with permanently lubricated ball bearings. The motor is protected by internal thermal overload protection.
3. The shaft has an inherent corrosion resistance.
4. Outdoor fan openings are equipped with metal/mesh PVC coated protection grille over fan.

D. Compressor

1. The compressor is fully hermetic variable speed rotary type.
2. The compressor is inverter driven.
3. The compressor is equipped with an oil system, operating oil charge, and motor.
4. The motor is suitable for operation in a refrigerant and oil atmosphere.
5. The compressor assembly is installed on rubber vibration isolators.
6. The inverter and compressor are protected against over temperature and over current.

E. Outdoor Coil:

The coil is constructed of aluminum blue hydrophilic pre−coated fins mechanically bonded to seamless copper tubes, which are cleaned, dehydrated and sealed.

F. Refrigerant Components:

Refrigerant circuit components include multiple brass external liquid line service valves with service gauge connection port, multiple suction line service valves with a service gage connection port, accumulator, reversing valve, electronic expansion valves.

G. Safeties:

Operating safeties are factory selected, assembled, and tested. The minimum functions include the following:

1. Compressor discharge over temperature protection.
2. System low voltage protection.
3. Compressor overload protection.
4. Compressor over current protection.
5. IPM module protection.

H. Electrical Requirements:

1. Units shall operate on single-phase, 60 Hz power at 208/230v.
2. The unit electrical power is a single point connection.
3. All power and control wiring must be installed per NEC and all local electrical codes.
4. Units have multiple terminal blocks to connect to multiple indoor units.

Copyright 2017 Carrier Corp. ● 7310 W. Morris St. ● Indianapolis, IN 46231

Manufacturer reserves the right to change, at any time, specifications and designs without notice and without obligations.