38MURA
Outdoor Unit Single Zone Heat Pump System
Sizes 1-1/2 to 5 Nominal Tons

Product Data

INDUSTRY LEADING FEATURES / BENEFITS

Energy Efficiency

- 14.7 - 18 SEER2 / 8.2 - 12.4 EER2 / 8.2 - 9.8 HSPF2

Sound

- Levels as low as 54 dBA

Design Features

- Small Footprint
- Integrated 24V and RS-485 communications

Reliability, Quality and Toughness

- Inverter-driven, variable speed, rotary Compressor
- Line lengths up to 213' (65 m)
- Low ambient operation on high heat models down to -22F (-30C) without the use of wind baffles
- Conventional line set sizes

NOTE: Ratings contained in this document are subject to change at any time. Always refer to the AHRI directory (www.ahridirectory.org) for the most up−to−date ratings information.

TABLE OF CONTENTS

	PAGE
MODEL NUMBER NOMENCLATURE	2
STANDARD FEATURES AND ACCESSORIES	3
DIMENSIONS	4
CLEARANCES	8
PERFORMANCE	9
PERFORMANCE - AIR HANDLER	10
APPLICATION DATA	82
WIRING	82
ELECTRICAL DATA	85
CONNECTION DIAGRAMS	86
24V CONNECTION DIAGRAMS	86
WIRING DIAGRAMS	88
GUIDE SPECIFICATIONS	96

MODEL NUMBER NOMENCLATURE

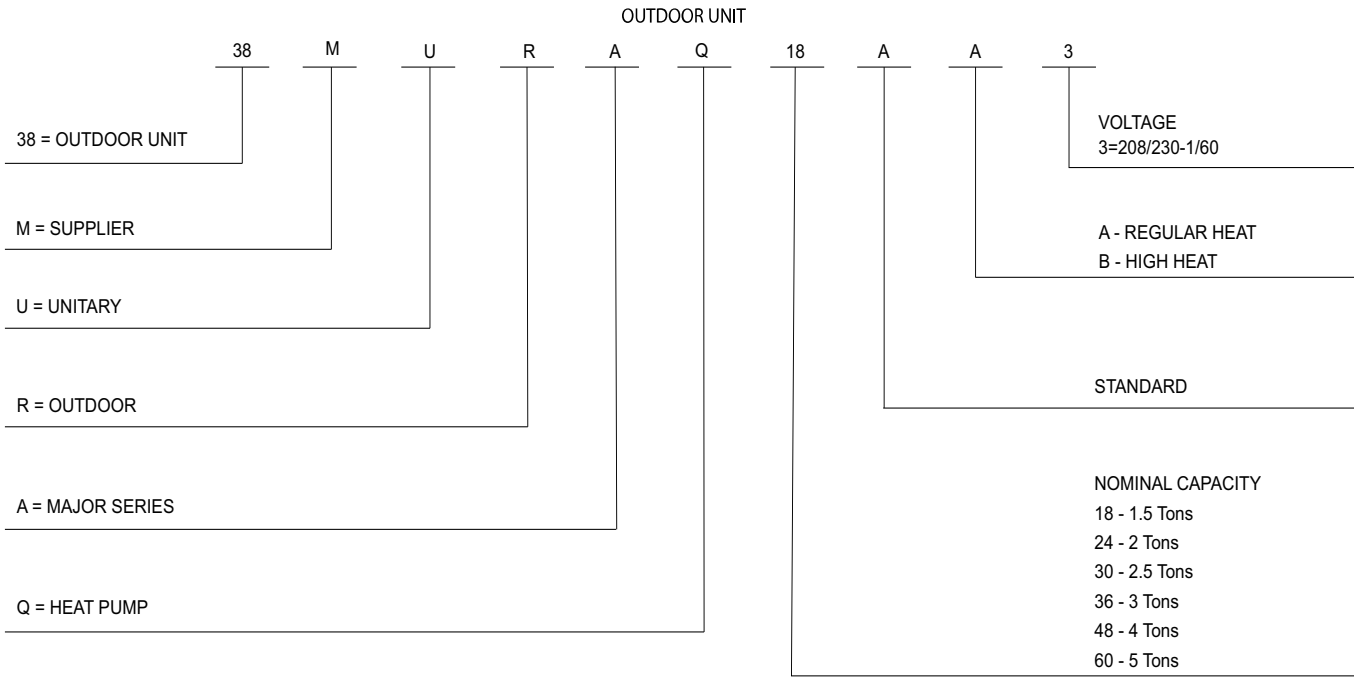

A220411

Use of the AHRI Certified TM Mark indicates a manufacturer's participation in the program For verification of certification for individual products, go to www.ahridirectory.org.

A220412

STANDARD FEATURES AND ACCESSORIES

Ease Of Installation	
Low Voltage Controls	S
Comfort Features	
Microprocessor Controls	S
Auto Restart Function	S
Auto Changeover	S
Energy Saving Features	
Inverter Driven Compressor	S
46° F Heating Mode (Heating Setback)*	S
Safety And Reliability	
3 Minute Time Delay For Compressor	S
High Compressor Discharge Temperature	S
Low Voltage Protection	S
Compressor Overload Protection	S
Compressor Over Current Protection	S
IPM Module Protection	S
Condenser High Temp Protection in Cooling Mode	S
Anti-corrosive film coating	S
Ease Of Service And Maintenance	
Diagnostics	S
Liquid Line Pressure Taps	S
Application Flexibility	
Crankcase Heater	S
Base pan Heater	S

*46°F setback is available with the wireless remote to work with the wire controller's IR. Only available when the wireless remote is used in conjunction with wired controller KSACN1001.

Legend

- **S - Standard**
- **A - Accessory**

Accessories

Model	Rubber Plug P/N	Quantity
38MURAQ18AA3	12600801A00077	26
38MURAQ24AA3	12600801A00077	34
38MURAQ30AA3	12600801A00117	5
38MURAQ36AA3	12600801A00117	5
38MURAQ48AA3	12600801A00118	5
38MURAQ60AA3	12600801A00118	5
38MURAQ18AB3	12600801A00077	34
38MURAQ24AB3	12600801A00117	5
38MURAQ30AB3	12600801A00117	5
38MURAQ36AB3	12600801A00118	5
38MURAQ48AB3	12600801A00118	5
38MURAQ60AB3	12600801A00118	5

NOTE: The base pan is built in with multiple holes for proper draining during the defrost process. For applications where it is required to seal these holes, and re-direct the condensate drain, rubber plugs are available through RCD.

Outdoor Units

Crankcase Unit

The crankcase heater is standard on all unit sizes. Heater clamps must be placed around the compressor oil sump.

Base pan Heater

The base pan heater is standard on all unit sizes.

Manufacturer reserves the right to change, at any time, specifications and designs without notice and without obligations.

DIMENSIONS

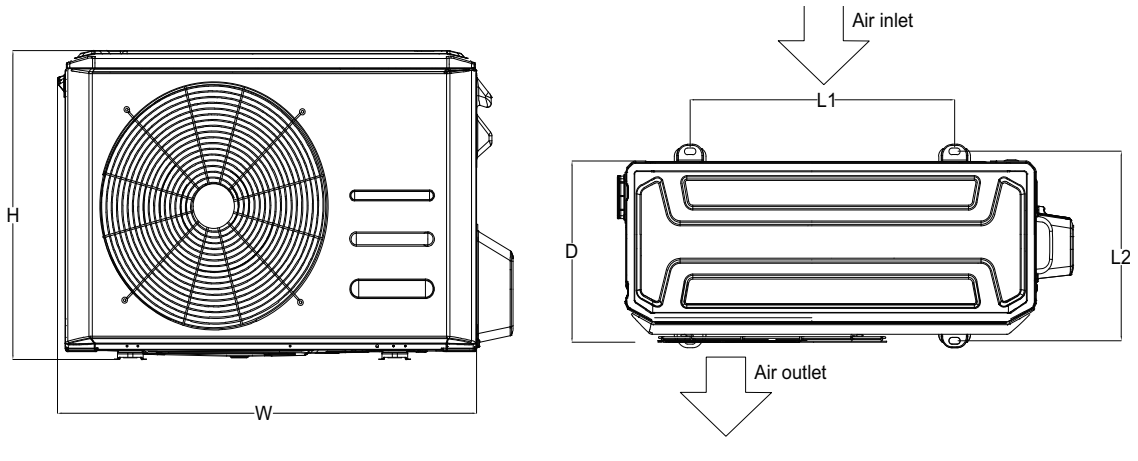

Fig. 1 — Outdoor Unit

Size	Unit	1.5T	2T	2.5T	3T	4T	5T
Width (W)	in (mm)	31.69 (805)	35.04 (890)	37.24 (946)	37.24 (946)	37.48 (952)	37.48 (952)
Height (H)	in (mm)	21.81 (554)	26.50 (673)	31.89 (810)	31.89 (810)	52.48 (1333)	52.48 (1333)
Depth (D)	in (mm)	12.99 (330)	13.29 (338)	16.02 (407)	16.02 (407)	16.34 (415)	16.34 (415)
L1	in (mm)	26.1 (663)	26.1 (663)	26.5 (673)	26.5 (673)	25 (634)	25 (634)
L2	in (mm)	13.65 (346.7)	13.65 (346.7)	15.85 (402.6)	15.85 (402.6)	15.9 (404)	15.9 (404)
Operating Weight	lbs (kg)	75.84 (34.4)	102.29 (46.4)	141.76 (64.3)	151.68 (68.8)	217.59 (98.7)	217.15 (98.5)
Shipping Width	in (mm)	36.02 (915)	39.17 (995)	42.91 (1090)	42.91 (1090)	43.11 (1095)	43.11 (1095)
Shipping Height	in (mm)	24.21 (615)	29.13 (740)	34.84 (885)	34.84 (885)	58.27 (1480)	58.27 (1480)
Shipping Depth	in (mm)	14.57 (370)	15.67 (398)	19.69 (500)	19.69 (500)	19.49 (495)	19.49 (495)
Shipping Weight	lbs (kg)	81.35 (36.9)	109.13 (49.5)	151.46 (68.7)	161.16 (73.1)	248.68 (112.8)	248.46 (112.7)

Size	Unit	1.5T - HH	2T - HH	2.5T - HH	3T - HH	4T - HH	5T - HH
Width (W)	in (mm)	35.04 (890)	37.24 (946)	37.24 (946)	37.48 (952)	37.48 (952)	37.48 (952)
Height (H)	in (mm)	26.50 (673)	31.89 (810)	31.89 (810)	52.48 (1333)	52.48 (1333)	52.48 (1333)
Depth (D)	in (mm)	13.29 (338)	16.02 (407)	16.02 (407)	16.34 (415)	16.34 (415)	16.34 (415)
L1	in (mm)	26.1 (663)	26.5 (673)	26.5 (673)	25 (634)	25 (634)	25 (634)
L2	in (mm)	13.65 (346.7)	15.85 (402.6)	15.85 (402.6)	15.9 (404)	15.9 (404)	15.9 (404)
Operating Weight	lbs (kg)	102.29 (46.4)	141.76 (64.3)	141.76 (64.3)	217.59 (98.7)	217.59 (98.7)	239.86 (108.8)
Shipping Width	in (mm)	39.17 (995)	42.91 (1090)	42.91 (1090)	43.11 (1095)	43.11 (1095)	43.11 (1095)
Shipping Height	in (mm)	29.13 (740)	34.84 (885)	34.84 (885)	58.27 (1480)	58.27 (1480)	58.27 (1480)
Shipping Depth	in (mm)	15.67 (398)	19.69 (500)	19.69 (500)	19.49 (495)	19.49 (495)	19.49 (495)
Shipping Weight	lbs (kg)	109.13 (49.5)	151.46 (68.7)	151.46 (68.7)	248.68 (112.8)	248.68 (112.8)	271.61 (123.2)

Manufacturer reserves the right to change, at any time, specifications and designs without notice and without obligations.

DIMENSIONS (CONT)

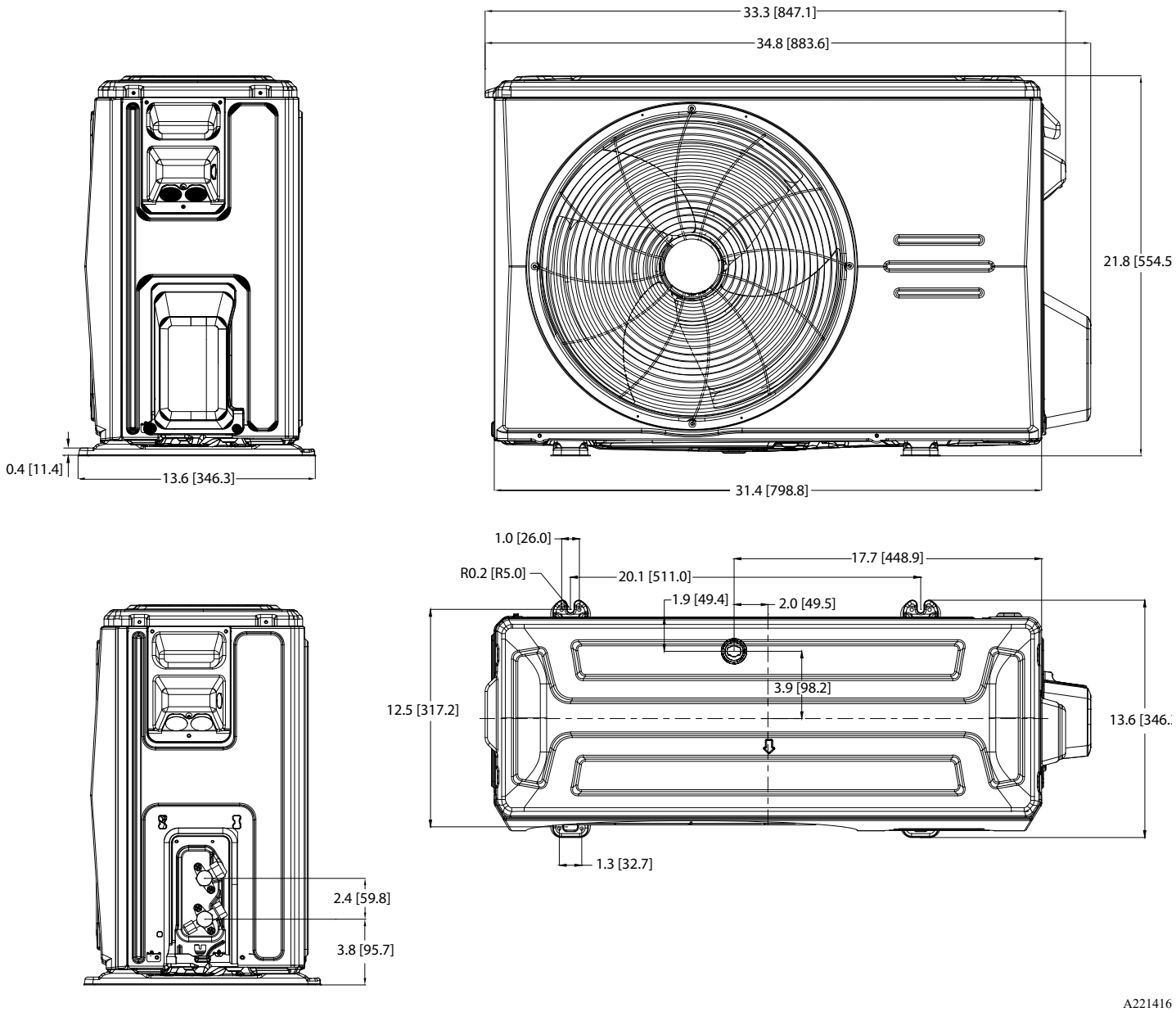

Fig. 2 —Dimension Size 18K

DIMENSIONS (CONT)

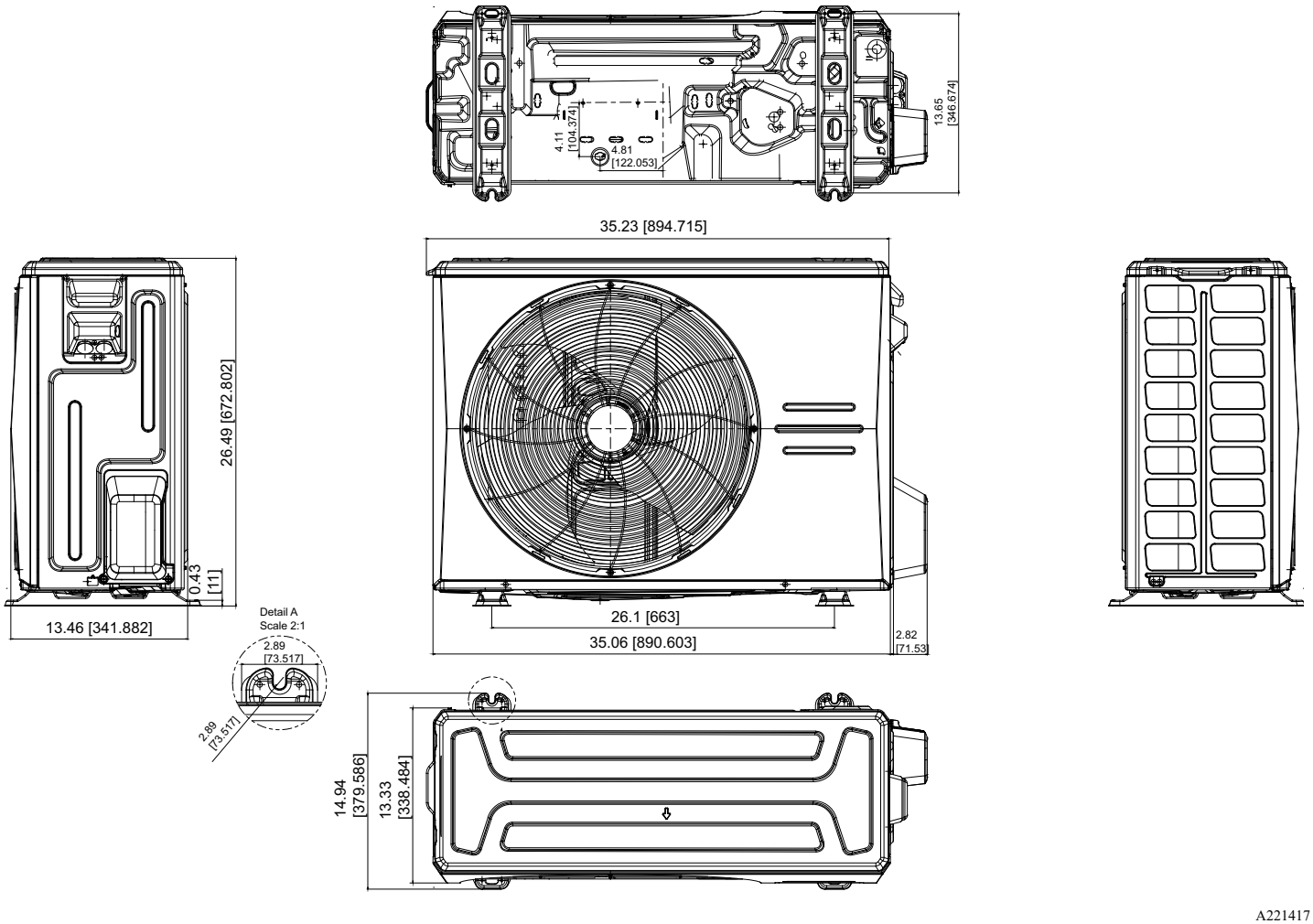

Fig. 3 —Dimension Sizes 18K HH / 24K

DIMENSIONS (CONT)

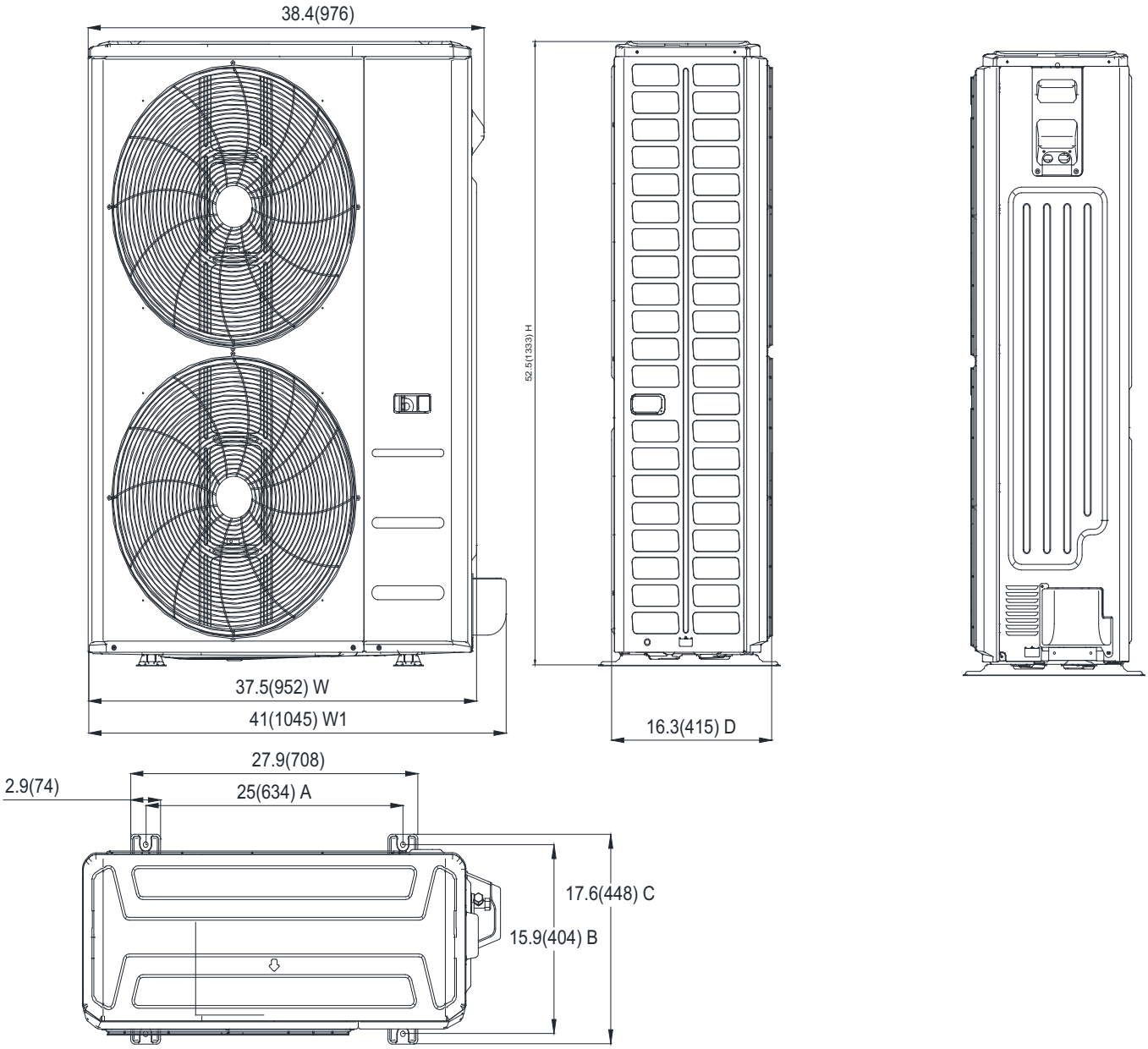

A221418

Fig. 4 —Dimension Sizes 36K HH / 48K HH / 60K / 60K HH

CLEARANCES

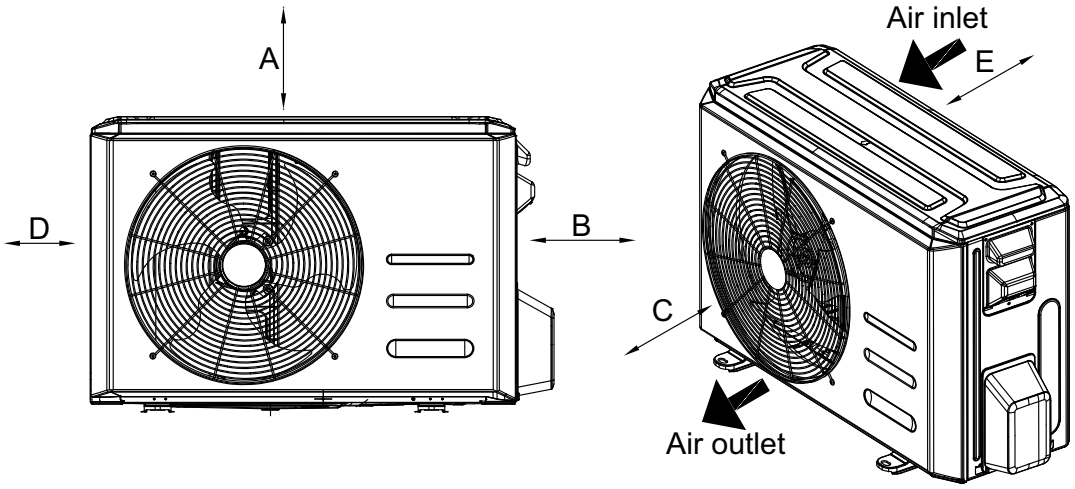

A220419

Fig. 5 —Clearances

UNIT	MINIMUM VALUE in. (mm)
A	24 (610)
B	24 (610)
C	24 (610)
D	4 (101)
E	4 (101)

NOTE: The outdoor unit must be mounted at least 2in (50mm) above the maximum anticipated snow depth.

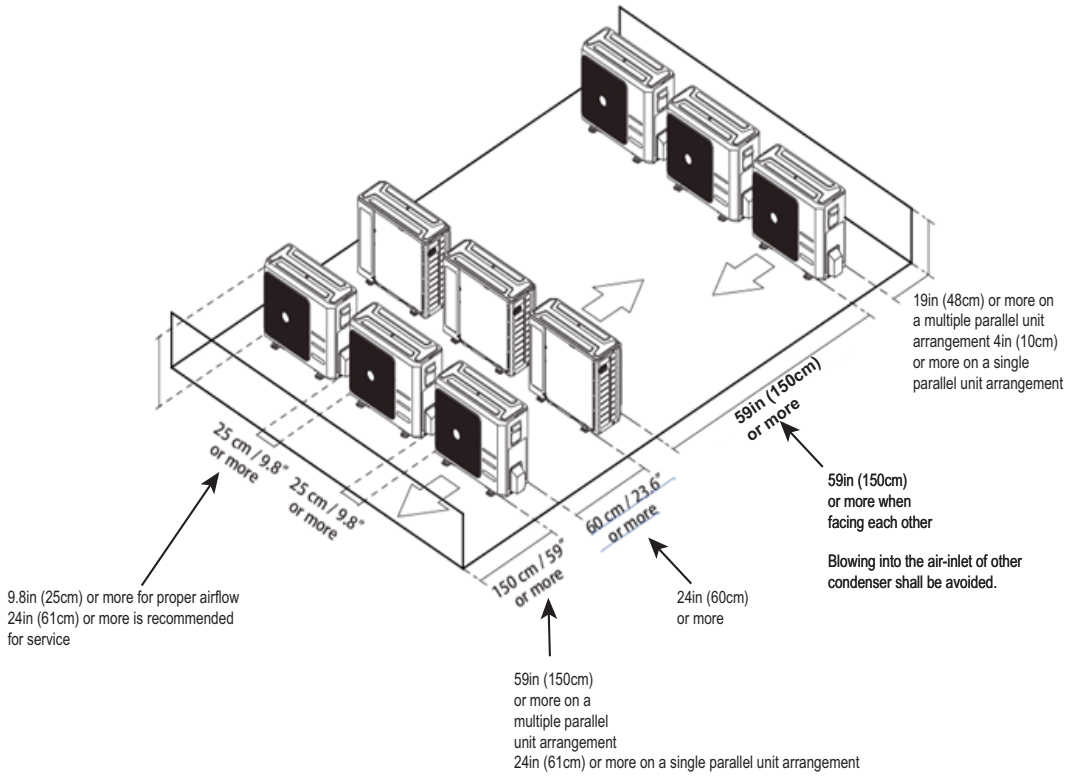

A220421

Fig. 6 —Clearances for multiple units

PERFORMANCE

NOTE: Ratings contained in this document are subject to change at any time. For AHRI ratings certificates, refer to the AHRI directory www.ahridirectory.org

AIR HANDLER

Heat Pump (Standard Heat)

Outdoor Size		1.5T	2T	2.5T	3T	4T	5T
M Ratings							
Indoor Model		18K	24K	30K	36K	48K	60K
Energy Star		NO	NO	NO	NO	NO	NO
Cooling Rated Capacity	Btu/h	18,000	24,000	30,000	36,000	47,000	57,000
Cooling Cap. Range Min - Max	Btu/h	5,400~18,700	7,500~26,000	9,500~33,000	8,900~38,900	10,500~48,000	4,400~60,200
SEER		19.0	19.4	19.5	18.0	17.3	18.0
EER		11.1	11.3	10.9	10.4	9.3	10.3
Heating Rated Capacity (47°F)	Btu/h	18,500	26,000	31,000	36,000	55,000	60,000
Heating Rated Capacity (17°F)	Btu/h	11,500	17,000	19,000	21,000	33,000	33,800
Heating Rated Capacity (5°F)	Btu/h	9,500	17,000	20,000	21,000	27,000	29,000
Heating Cap. Range Min - Max	Btu/h	5,600~18,700	5,600~30,000	12,200~32,000	6,000~36,400	11,700~57,000	11,400~63,100
HSPF		10.8	11.3	10.3	9.1	10.0	9.2
COP (47°F)	W/W	3.49	3.54	3.19	3.02	3.00	3.55
COP (17°F)	W/W	2.70	2.75	2.30	2.25	2.00	2.45
COP (5°F)	W/W	1.85	1.75	1.95	1.80	1.72	1.80
M1 Ratings							
Cooling Rated Capacity	Btu/h	18,000	24,000	30,000	36,000	47,000	57,000
Cooling Cap. Range Min - Max	Btu/h	5,400~18,700	7,500~26,000	9,500~33,000	8,900~38,900	10,500~48,000	4,400~60,200
SEER2		16.0	17.0	17.3	16.9	15.8	14.7
EER2		10.8	10.5	10.6	10.1	8.8	8.7
Heating Rated Capacity (47°F)	Btu/h	18,000	26,000	31,000	36,000	55,000	60,000
Heating Rated Capacity (17°F)	Btu/h	11,500	20,700	20,000	20,500	36,500	36,000
Heating Rated Capacity (5°F)	Btu/h	10,000	17,000	17,800	21,000	36,500	34,800
Heating Cap. Range Min - Max	Btu/h	5,600~18,700	5,600~30,000	12,200~32,000	6,000~36,400	11,700~57,000	11,400~63,100
HSPF2		8.7	9.1	8.5	8.2	9.4	8.4
COP (47°F)	W/W	3.50	3.45	3.25	3.39	3.15	3.45
COP (17°F)	W/W	2.75	2.40	2.45	2.40	2.30	2.35
COP (5°F)	W/W	1.90	2.00	1.75	1.88	1.98	1.89

Heat Pump (High Heat)

Outdoor Size		1.5T - HH	2T - HH	2.5T - HH	3T - HH	4T - HH	5T - HH
M Ratings							
Indoor Model		18K	24K	30K	36K	48K	60K
Energy Star		YES	YES	NO	NO	NO	NO
Cooling Rated Capacity	Btu/h	18,000	24,000	30,000	36,000	47,000	55,000
Cooling Cap. Range Min - Max	Btu/h	6,900~21,000	6,400~27,000	10,400~33,600	12,000~47,400	18,000~48,000	18,000~56,000
SEER		20.0	20.0	18.0	18.0	16.0	16.4
EER		12.5	12.5	11	10.5	8.5	9
Heating Rated Capacity (47°F)	Btu/h	19,000	24,000	33,000	41,500	50,000	59,000
Heating Rated Capacity (17°F)	Btu/h	13,000	16,700	19,400	24,000	32,000	42,000
Heating Rated Capacity (5°F)	Btu/h	19,000	24,000	28,500	43,300	47,000	50,000
Heating Cap. Range Min - Max	Btu/h	2,800~21,000	10,100~31,000	12,000~37,000	9,000~57,200	20,000~55,000	20,000~68,000
HSPF		11.0	12.0	10.5	10.5	10.0	10.5
COP (47°F)	W/W	3.59	3.45	3.48	3.45	3.00	3.50
COP (17°F)	W/W	2.75	2.70	2.60	2.65	2.30	2.60
COP (5°F)	W/W	1.90	1.80	1.95	1.80	1.88	1.96
M1 Ratings							
Cooling Rated Capacity	Btu/h	18,000	24,000	30,000	36,000	47,000	55,000
Cooling Cap. Range Min - Max	Btu/h	6,900~21,000	6400~27000	10400~33600	12000~47400	18000~48000	18000~56000
SEER2		18.0	17.4	16.2	15.8	15.6	15.0
EER2		12.4	11.7	9.8	9.8	8.2	8.5
Heating Rated Capacity (47°F)	Btu/h	19,000	24,000	33,000	41,000	50,000	59,000
Heating Rated Capacity (17°F)	Btu/h	13,000	18,600	20,400	29,500	35,000	42,000
Heating Rated Capacity (5°F)	Btu/h	16,500	22,700	24,100	34,500	46,000	50,000
Heating Cap. Range Min - Max	Btu/h	2,800~21,000	10,100~31,000	12,000~37,000	9,000~57,200	20,000~55,000	20,000~68,000
HSPF2		9.2	9.8	8.8	9.5	9.3	9.0
COP (47°F)	W/W	3.60	3.40	3.30	3.35	3.15	3.00
COP (17°F)	W/W	2.50	2.40	2.30	2.40	2.30	2.60
COP (5°F)	W/W	2.00	1.85	1.80	1.95	1.90	1.96

PERFORMANCE - AIR HANDLER

COOLING PERFORMANCE - 18K (Sheet 1 of 4)

AIRFLOW (CFM)	OUTDOOR DB(F)	ID WB(F)	60.8				64.4				66.2				71.6			
		ID DB(F)	73.4	77.0	80.6	84.2	73.4	77.0	80.6	84.2	73.4	77.0	80.6	84.2	73.4	77.0	80.6	84.2
489	-22	TC	19068	19078	19287	19495	19970	20392	20392	20598	20466	20466	20466	20466	21548	21548	21548	21548
		S/T	0.72	0.83	0.92	0.95	0.57	0.67	0.76	0.86	0.49	0.59	0.68	0.77	0.33	0.42	0.50	0.59
		PI	1.36	1.37	1.37	1.36	1.37	1.37	1.37	1.37	1.37	1.37	1.37	1.37	1.37	1.37	1.37	1.37
	-10	TC	18927	18937	19144	19351	19857	20276	20276	20481	20364	20364	20364	20364	21482	21482	21482	21482
		S/T	0.73	0.83	0.93	0.96	0.57	0.67	0.77	0.86	0.50	0.59	0.69	0.78	0.34	0.42	0.51	0.59
		PI	1.23	1.24	1.24	1.23	1.23	1.23	1.23	1.23	1.23	1.23	1.23	1.23	1.24	1.24	1.24	1.24
	0	TC	18810	18820	19026	19231	19762	20180	20180	20384	20279	20279	20279	20279	21428	21428	21428	21428
		S/T	0.73	0.84	0.93	0.96	0.58	0.67	0.77	0.87	0.50	0.60	0.69	0.78	0.34	0.42	0.51	0.60
		PI	1.15	1.16	1.16	1.15	1.15	1.15	1.15	1.15	1.15	1.15	1.15	1.15	1.15	1.15	1.15	1.15
	5	TC	18755	18765	18970	19175	19726	20143	20143	20346	20248	20248	20248	20248	21414	21414	21414	21414
		S/T	0.73	0.84	0.94	0.97	0.58	0.68	0.77	0.87	0.50	0.60	0.70	0.78	0.34	0.42	0.51	0.60
		PI	1.08	1.09	1.09	1.08	1.08	1.08	1.08	1.08	1.08	1.08	1.08	1.08	1.07	1.07	1.07	1.07
	14	TC	18643	18654	18857	19061	19615	20030	20030	20232	20146	20146	20146	20146	21341	21341	21341	21341
		S/T	0.74	0.84	0.94	0.97	0.58	0.68	0.78	0.87	0.50	0.60	0.70	0.79	0.34	0.43	0.51	0.60
		PI	1.08	1.08	1.08	1.08	1.07	1.07	1.07	1.07	1.08	1.08	1.08	1.08	1.07	1.07	1.07	1.07
	23	TC	18532	18542	18745	18948	19541	19954	19954	20156	20073	20073	20073	20073	21287	21287	21287	21287
		S/T	0.74	0.85	0.95	0.98	0.59	0.68	0.78	0.88	0.51	0.60	0.70	0.79	0.34	0.43	0.52	0.60
		PI	1.08	1.08	1.08	1.08	1.07	1.07	1.07	1.07	1.08	1.08	1.08	1.08	1.08	1.08	1.08	1.08
	32	TC	18440	18450	18651	18853	19468	19879	19879	20080	20017	20017	20017	20017	21269	21269	21269	21269
		S/T	0.74	0.85	0.95	0.98	0.59	0.69	0.78	0.88	0.51	0.61	0.71	0.79	0.34	0.43	0.52	0.61
		PI	1.08	1.08	1.08	1.08	1.08	1.08	1.08	1.08	1.08	1.08	1.08	1.08	1.08	1.08	1.08	1.08
	41	TC	18347	18357	18558	18758	19394	19803	19803	20003	19953	19953	19953	19953	21251	21251	21251	21251
		S/T	0.75	0.86	0.96	0.99	0.59	0.69	0.79	0.89	0.51	0.61	0.71	0.80	0.34	0.43	0.52	0.61
		PI	1.09	1.09	1.09	1.09	1.09	1.09	1.09	1.09	1.09	1.09	1.09	1.09	1.09	1.09	1.09	1.09
	50	TC	18236	18246	18445	18644	19301	19709	19709	19908	19869	19869	19869	19869	21196	21196	21196	21196
		S/T	0.75	0.86	0.96	0.99	0.59	0.69	0.79	0.89	0.51	0.61	0.71	0.80	0.35	0.44	0.52	0.61
		PI	1.11	1.11	1.11	1.11	1.10	1.10	1.10	1.10	1.11	1.11	1.11	1.11	1.10	1.10	1.10	1.10
	59	TC	18087	18097	18295	18493	19172	19577	19577	19775	19749	19749	19749	19749	21106	21106	21106	21106
		S/T	0.76	0.87	0.97	1.00	0.60	0.70	0.80	0.90	0.52	0.62	0.72	0.81	0.35	0.44	0.53	0.62
		PI	1.14	1.14	1.14	1.13	1.13	1.13	1.13	1.13	1.13	1.13	1.13	1.13	1.12	1.12	1.12	1.12
	68	TC	17884	17893	18089	18284	18969	18969	18969	19164	19556	19556	19556	19556	20924	20924	20924	20924
		S/T	0.76	0.87	0.97	1.00	0.60	0.70	0.80	0.90	0.52	0.62	0.72	0.81	0.35	0.44	0.53	0.62
		PI	1.17	1.18	1.18	1.17	1.17	1.17	1.17	1.17	1.17	1.17	1.17	1.17	1.16	1.16	1.16	1.16
	77	TC	17013	17209	17404	17600	18089	18089	18089	18284	18676	18676	18676	18676	20044	20044	20044	20044
		S/T	0.78	0.88	0.99	1.00	0.61	0.71	0.82	0.92	0.53	0.63	0.73	0.83	0.34	0.44	0.53	0.63
		PI	1.30	1.30	1.30	1.30	1.30	1.30	1.30	1.30	1.30	1.30	1.30	1.30	1.30	1.30	1.30	1.30
	86	TC	16231	16427	16622	16818	17307	17307	17307	17502	17796	17796	17796	17796	19164	19164	19164	19164
		S/T	0.79	0.90	1.00	1.00	0.61	0.72	0.83	0.94	0.53	0.64	0.74	0.85	0.34	0.44	0.54	0.64
		PI	1.41	1.41	1.41	1.41	1.42	1.42	1.42	1.42	1.42	1.42	1.42	1.42	1.42	1.42	1.42	1.42
	95	TC	15449	15644	15840	16036	16427	16427	16427	16622	16916	16916	17209	16916	18284	18284	18284	18284
		S/T	0.81	0.92	1.00	1.00	0.62	0.74	0.85	0.96	0.54	0.65	0.75	0.87	0.34	0.44	0.55	0.65
		PI	1.55	1.55	1.55	1.55	1.55	1.55	1.55	1.55	1.56	1.56	1.56	1.56	1.57	1.57	1.57	1.57
	104	TC	14606	14758	14910	15061	15543	15543	15587	15739	16033	16033	16194	16122	17317	17317	17317	17317
		S/T	0.84	0.97	1.00	1.00	0.64	0.76	0.89	1.00	0.54	0.67	0.79	0.91	0.33	0.45	0.56	0.67
		PI	1.71	1.71	1.71	1.71	1.71	1.71	1.71	1.71	1.72	1.72	1.72	1.72	1.73	1.73	1.73	1.73
	115	TC	13536	13634	13732	13831	14419	14419	14517	14615	14910	14910	14910	15106	16087	16087	16087	16087
		S/T	0.85	0.99	1.00	1.00	0.65	0.78	0.91	1.00	0.55	0.68	0.80	0.93	0.33	0.45	0.57	0.69
		PI	1.90	1.90	1.90	1.90	1.91	1.91	1.91	1.91	1.91	1.91	1.91	1.91	1.93	1.93	1.93	1.93
	122	TC	12654	12752	12850	12948	13536	13536	13634	13732	14027	14027	14027	14125	15204	15204	15204	15204
		S/T	0.88	1.00	1.00	1.00	0.66	0.80	0.94	1.00	0.56	0.69	0.83	0.96	0.33	0.45	0.58	0.70
		PI	2.06	2.06	2.06	2.06	2.07	2.07	2.07	2.07	2.07	2.07	2.07	2.07	2.09	2.09	2.09	2.09

Manufacturer reserves the right to change, at any time, specifications and designs without notice and without obligations.

COOLING PERFORMANCE - 18K (Sheet 2 of 4)

AIRFLOW (CFM)	OUTDOOR DB(F)	ID WB(F)	60.8				64.4				66.2				71.6			
		ID DB(F)	73.4	77.0	80.6	84.2	73.4	77.0	80.6	84.2	73.4	77.0	80.6	84.2	73.4	77.0	80.6	84.2
530	-22	TC	19505	19713	19922	20131	20392	20392	20392	20598	20886	20886	20886	20886	22062	22062	22062	22062
		S/T	0.74	0.85	0.97	1.00	0.58	0.68	0.78	0.87	0.50	0.60	0.69	0.80	0.32	0.42	0.51	0.60
		PI	1.36	1.37	1.37	1.36	1.37	1.37	1.37	1.37	1.37	1.37	1.37	1.37	1.37	1.37	1.37	1.37
	-10	TC	19361	19568	19775	19982	20276	20276	20276	20481	20781	20781	20781	20781	21995	21995	21995	21995
		S/T	0.75	0.85	0.97	1.00	0.58	0.68	0.79	0.88	0.51	0.60	0.70	0.80	0.33	0.42	0.52	0.60
		PI	1.23	1.24	1.24	1.23	1.23	1.23	1.23	1.23	1.23	1.23	1.23	1.23	1.24	1.24	1.24	1.24
	0	TC	19241	19446	19652	19858	20180	20180	20180	20384	20694	20694	20694	20694	21940	21940	21940	21940
		S/T	0.75	0.86	0.98	1.00	0.59	0.68	0.79	0.89	0.51	0.61	0.70	0.81	0.33	0.42	0.52	0.61
		PI	1.17	1.17	1.17	1.17	1.17	1.17	1.17	1.17	1.17	1.17	1.17	1.17	1.18	1.18	1.18	1.18
	5	TC	19184	19390	19595	19800	20143	20143	20143	20346	20663	20663	20663	20663	21925	21925	21925	21925
		S/T	0.75	0.86	0.98	1.00	0.59	0.69	0.79	0.89	0.51	0.61	0.70	0.81	0.33	0.42	0.52	0.61
		PI	1.10	1.10	1.10	1.10	1.10	1.10	1.10	1.10	1.10	1.10	1.10	1.10	1.10	1.10	1.10	1.10
	14	TC	19071	19275	19479	19683	20030	20030	20030	20232	20560	20560	20560	20560	21851	21851	21851	21851
		S/T	0.76	0.86	0.99	1.00	0.59	0.69	0.80	0.89	0.51	0.61	0.71	0.82	0.33	0.43	0.52	0.61
		PI	1.10	1.10	1.10	1.10	1.09	1.09	1.09	1.09	1.09	1.09	1.09	1.09	1.10	1.10	1.10	1.10
	23	TC	18957	19160	19362	19565	19954	19954	19954	20156	20484	20484	20484	20484	21795	21795	21795	21795
		S/T	0.76	0.87	0.99	1.00	0.59	0.69	0.80	0.90	0.52	0.61	0.71	0.82	0.33	0.43	0.53	0.61
		PI	1.10	1.10	1.10	1.10	1.09	1.09	1.09	1.09	1.09	1.09	1.09	1.09	1.10	1.10	1.10	1.10
	32	TC	18862	19064	19266	19467	19879	19879	19879	20080	20428	20428	20428	20428	21776	21776	21776	21776
		S/T	0.76	0.87	1.00	1.00	0.60	0.70	0.80	0.90	0.52	0.62	0.72	0.82	0.33	0.43	0.53	0.62
		PI	1.10	1.10	1.10	1.10	1.10	1.10	1.10	1.10	1.10	1.10	1.10	1.10	1.11	1.11	1.11	1.11
	41	TC	18767	18968	19169	19370	19803	19803	19803	20003	20362	20362	20362	20362	21758	21758	21758	21758
		S/T	0.77	0.88	1.00	1.00	0.60	0.70	0.81	0.91	0.52	0.62	0.72	0.83	0.33	0.43	0.53	0.62
		PI	1.11	1.11	1.11	1.11	1.11	1.11	1.11	1.11	1.11	1.11	1.11	1.11	1.11	1.11	1.11	1.11
	50	TC	18654	18853	19053	19252	19709	19709	19709	19908	20277	20277	20277	20277	21702	21702	21702	21702
		S/T	0.77	0.88	1.00	1.00	0.60	0.70	0.81	0.91	0.52	0.62	0.72	0.83	0.34	0.44	0.53	0.62
		PI	1.13	1.13	1.13	1.13	1.12	1.12	1.12	1.12	1.12	1.12	1.12	1.12	1.13	1.13	1.13	1.13
	59	TC	18502	18700	18898	19096	19577	19577	19577	19775	20154	20154	20154	20154	21609	21609	21609	21609
		S/T	0.78	0.89	0.99	1.00	0.61	0.71	0.82	0.92	0.53	0.63	0.73	0.84	0.34	0.44	0.54	0.63
		PI	1.16	1.16	1.16	1.16	1.15	1.15	1.15	1.15	1.15	1.15	1.15	1.15	1.15	1.15	1.15	1.15
	68	TC	18293	18489	18685	18880	19370	19370	19370	19565	19957	19957	19957	19957	21424	21424	21424	21424
		S/T	0.78	0.89	0.99	1.00	0.61	0.71	0.82	0.92	0.53	0.63	0.73	0.84	0.34	0.44	0.54	0.63
		PI	1.20	1.20	1.20	1.20	1.19	1.19	1.19	1.19	1.19	1.19	1.19	1.19	1.19	1.19	1.19	1.19
	77	TC	17413	17609	17804	18000	18489	18489	18489	18685	19076	19076	19076	19076	20543	20543	20543	20543
		S/T	0.79	0.91	1.00	1.00	0.62	0.73	0.84	0.94	0.53	0.64	0.75	0.86	0.34	0.44	0.54	0.64
		PI	1.32	1.32	1.32	1.32	1.32	1.32	1.32	1.32	1.32	1.32	1.32	1.32	1.32	1.32	1.32	1.32
	86	TC	16630	16826	17022	17217	17707	17707	17707	17902	18196	18196	18196	18196	19663	19663	19663	19663
		S/T	0.81	0.93	1.00	1.00	0.62	0.74	0.85	0.97	0.54	0.65	0.76	0.88	0.34	0.44	0.55	0.65
		PI	1.44	1.44	1.44	1.44	1.44	1.44	1.44	1.44	1.45	1.45	1.45	1.45	1.45	1.45	1.45	1.45
	95	TC	15750	15946	16141	16337	16826	16826	16826	17022	17315	17315	17609	17804	18685	18685	18685	18685
		S/T	0.83	0.95	1.00	1.00	0.63	0.75	0.88	0.99	0.54	0.66	0.77	0.89	0.34	0.45	0.56	0.67
		PI	1.58	1.58	1.58	1.58	1.58	1.58	1.58	1.58	1.59	1.59	1.59	1.59	1.59	1.59	1.59	1.59
	104	TC	14813	14964	15115	15266	15798	15798	15886	16081	16285	16285	16445	16640	17606	17606	17606	17606
		S/T	0.86	1.00	1.00	1.00	0.65	0.78	0.91	1.00	0.55	0.68	0.81	0.93	0.33	0.45	0.57	0.69
		PI	1.74	1.74	1.74	1.74	1.74	1.74	1.74	1.74	1.75	1.75	1.75	1.75	1.76	1.76	1.76	1.76
	115	TC	13750	13847	13945	14042	14627	14627	14822	15017	15115	15115	15115	15310	16383	16383	16383	16383
		S/T	0.88	1.00	1.00	1.00	0.66	0.80	0.93	1.00	0.56	0.69	0.83	0.96	0.33	0.45	0.58	0.70
		PI	1.93	1.93	1.93	1.93	1.94	1.94	1.94	1.94	1.95	1.95	1.95	1.95	1.96	1.96	1.96	1.96
	122	TC	12872	12970	13067	13165	13750	13750	13847	13945	14237	14237	14237	14335	15407	15407	15407	15407
		S/T	0.90	1.00	1.00	1.00	0.67	0.82	0.97	1.00	0.57	0.71	0.85	0.99	0.32	0.46	0.59	0.91
		PI	2.10	2.10	2.10	2.10	2.11	2.11	2.11	2.11	2.11	2.11	2.11	2.11	2.13	2.13	2.13	2.13

Manufacturer reserves the right to change, at any time, specifications and designs without notice and without obligations.

COOLING PERFORMANCE - 18K (Sheet 3 of 4)

AIRFLOW (CFM)	OUTDOOR DB(F)	ID WB(F)	60.8				64.4				66.2				71.6			
		ID DB(F)	73.4	77.0	80.6	84.2	73.4	77.0	80.6	84.2	73.4	77.0	80.6	84.2	73.4	77.0	80.6	84.2
577	-22	TC	19922	20131	20339	20548	20907	20907	20907	21113	21397	21397	21397	21397	22566	22566	22566	22566
		S/T	0.76	0.87	1.00	1.00	0.59	0.69	0.80	0.96	0.50	0.61	0.71	0.82	0.32	0.42	0.51	0.62
		PI	1.36	1.37	1.37	1.36	1.37	1.37	1.37	1.37	1.37	1.37	1.37	1.37	1.37	1.37	1.37	1.37
	-10	TC	19775	19982	20189	20396	20788	20788	20788	20993	21291	21291	21291	21291	22497	22497	22497	22497
		S/T	0.77	0.87	1.00	1.00	0.59	0.70	0.80	0.97	0.51	0.61	0.72	0.82	0.33	0.42	0.52	0.62
		PI	1.23	1.24	1.24	1.23	1.23	1.23	1.23	1.23	1.23	1.23	1.23	1.23	1.24	1.24	1.24	1.24
	0	TC	19652	19858	20064	20270	20689	20689	20689	20893	21202	21202	21202	21202	22440	22440	22440	22440
		S/T	0.77	0.88	1.00	1.00	0.60	0.70	0.81	0.97	0.51	0.62	0.72	0.83	0.33	0.42	0.52	0.63
		PI	1.19	1.19	1.19	1.19	1.20	1.20	1.20	1.20	1.19	1.19	1.19	1.19	1.20	1.20	1.20	1.20
	5	TC	19595	19800	20005	20210	20651	20651	20651	20855	21170	21170	21170	21170	22425	22425	22425	22425
		S/T	0.77	0.88	1.00	1.00	0.60	0.70	0.81	0.98	0.51	0.62	0.72	0.83	0.33	0.42	0.52	0.63
		PI	1.12	1.12	1.12	1.12	1.12	1.12	1.12	1.12	1.12	1.12	1.12	1.12	1.12	1.12	1.12	1.12
	14	TC	19479	19683	19887	20091	20535	20535	20535	20738	21063	21063	21063	21063	22349	22349	22349	22349
		S/T	0.78	0.88	1.00	1.00	0.60	0.71	0.82	0.98	0.51	0.62	0.73	0.83	0.33	0.43	0.52	0.63
		PI	1.12	1.12	1.12	1.12	1.12	1.12	1.12	1.12	1.11	1.11	1.11	1.11	1.12	1.12	1.12	1.12
	23	TC	19362	19565	19768	19971	20458	20458	20458	20660	20986	20986	20986	20986	22292	22292	22292	22292
		S/T	0.78	0.89	1.00	1.00	0.60	0.71	0.82	0.99	0.52	0.62	0.73	0.84	0.33	0.43	0.53	0.63
		PI	1.11	1.11	1.11	1.11	1.12	1.12	1.12	1.12	1.11	1.11	1.11	1.11	1.12	1.12	1.12	1.12
	32	TC	19266	19467	19669	19871	20381	20381	20381	20582	20928	20928	20928	20928	22274	22274	22274	22274
		S/T	0.78	0.89	1.00	1.00	0.61	0.72	0.82	0.99	0.52	0.63	0.74	0.84	0.33	0.43	0.53	0.64
		PI	1.12	1.12	1.12	1.12	1.12	1.12	1.12	1.12	1.12	1.12	1.12	1.12	1.13	1.13	1.13	1.13
	41	TC	19169	19370	19570	19771	20303	20303	20303	20503	20861	20861	20861	20861	22255	22255	22255	22255
		S/T	0.79	0.90	1.00	1.00	0.61	0.72	0.83	1.00	0.52	0.63	0.74	0.85	0.33	0.43	0.53	0.64
		PI	1.13	1.13	1.13	1.13	1.13	1.13	1.13	1.13	1.13	1.13	1.13	1.13	1.13	1.13	1.13	1.13
	50	TC	19053	19252	19452	19651	20207	20207	20207	20406	20774	20774	20774	20774	22198	22198	22198	22198
		S/T	0.79	0.90	1.00	1.00	0.61	0.72	0.83	1.00	0.52	0.63	0.74	0.85	0.34	0.44	0.53	0.64
		PI	1.15	1.15	1.15	1.15	1.15	1.15	1.15	1.15	1.14	1.14	1.14	1.14	1.15	1.15	1.15	1.15
	59	TC	18898	19096	19294	19491	20071	20071	20071	20269	20648	20648	20648	20648	22103	22103	22103	22103
		S/T	0.80	0.91	1.00	1.00	0.62	0.73	0.84	0.95	0.53	0.64	0.75	0.86	0.34	0.44	0.54	0.65
		PI	1.18	1.18	1.18	1.18	1.18	1.18	1.18	1.18	1.17	1.17	1.17	1.17	1.17	1.17	1.17	1.17
	68	TC	18685	18880	19076	19272	19859	19859	19859	20054	20446	20446	20446	20446	21913	21913	21913	21913
		S/T	0.80	0.91	1.00	1.00	0.62	0.73	0.84	0.95	0.53	0.64	0.75	0.86	0.34	0.44	0.54	0.65
		PI	1.22	1.22	1.22	1.22	1.22	1.22	1.22	1.22	1.21	1.21	1.21	1.21	1.21	1.21	1.21	1.21
	77	TC	17804	18000	18196	18391	18978	18978	18978	19174	19565	19565	19565	19565	21033	21033	21033	21033
		S/T	0.81	0.93	1.00	1.00	0.62	0.74	0.86	0.97	0.54	0.65	0.77	0.88	0.34	0.44	0.55	0.66
		PI	1.35	1.35	1.35	1.35	1.35	1.35	1.35	1.35	1.35	1.35	1.35	1.35	1.35	1.35	1.35	1.35
	86	TC	17022	17217	17413	17609	18098	18098	18098	18293	18587	18587	18587	18783	20054	20054	20054	20054
		S/T	0.83	0.96	1.00	1.00	0.63	0.76	0.88	1.00	0.54	0.66	0.78	0.90	0.33	0.45	0.56	0.67
		PI	1.47	1.47	1.47	1.47	1.47	1.47	1.47	1.47	1.47	1.47	1.47	1.47	1.48	1.48	1.48	1.48
	95	TC	16141	16337	16533	16728	17217	17217	17413	17609	17707	17707	18000	18196	19076	19076	19076	19076
		S/T	0.85	0.98	1.00	1.00	0.64	0.77	0.90	1.00	0.55	0.67	0.80	0.91	0.33	0.45	0.57	0.68
		PI	1.61	1.61	1.61	1.61	1.61	1.61	1.61	1.61	1.62	1.62	1.62	1.62	1.63	1.63	1.63	1.63
	104	TC	15159	15310	15461	15611	16188	16188	16383	16578	16675	16675	16835	17030	17996	17996	17996	17996
		S/T	0.89	1.00	1.00	1.00	0.66	0.81	0.94	1.00	0.56	0.70	0.84	0.97	0.33	0.45	0.58	0.90
		PI	1.77	1.77	1.77	1.77	1.78	1.78	1.78	1.78	1.79	1.79	1.79	1.79	1.80	1.80	1.80	1.80
	115	TC	14042	14140	14237	14335	15017	15017	15212	15407	15505	15505	15505	15700	16773	16773	16773	16773
		S/T	0.90	1.00	1.00	1.00	0.67	0.82	0.96	1.00	0.57	0.71	0.85	0.99	0.32	0.46	0.59	0.92
		PI	1.97	1.97	1.97	1.97	1.98	1.98	1.98	1.98	1.99	1.99	1.99	1.99	2.00	2.00	2.00	2.00
	122	TC	13165	13262	13360	13457	14042	14042	14140	14237	14530	14530	14530	14627	15798	15798	15798	15798
		S/T	0.93	1.00	1.00	1.00	0.69	0.85	1.00	1.00	0.58	0.73	0.88	1.00	0.32	0.46	0.60	0.97
		PI	2.14	2.14	2.14	2.14	2.15	2.15	2.15	2.15	2.15	2.15	2.15	2.15	2.17	2.17	2.17	2.17

Manufacturer reserves the right to change, at any time, specifications and designs without notice and without obligations.

COOLING PERFORMANCE - 18K (Sheet 4 of 4)

AIRFLOW (CFM)	OUTDOOR DB(F)	ID WB(F)	60.8				64.4				66.2				71.6			
		ID DB(F)	73.4	77.0	80.6	84.2	73.4	77.0	80.6	84.2	73.4	77.0	80.6	84.2	73.4	77.0	80.6	84.2
618	-22	TC	20348	20557	20765	20974	21435	21435	21435	21641	21922	21922	21922	21922	23081	23081	23081	23081
		S/T	0.78	0.88	1.00	1.00	0.60	0.71	0.82	1.00	0.50	0.62	0.73	0.84	0.32	0.42	0.51	0.64
		PI	1.14	1.14	1.14	1.14	1.15	1.15	1.15	1.15	1.13	1.13	1.13	1.13	1.13	1.13	1.13	1.13
	-10	TC	20198	20405	20612	20819	21313	21313	21313	21518	21812	21812	21812	21812	23011	23011	23011	23011
		S/T	0.79	0.89	1.00	1.00	0.60	0.72	0.82	1.00	0.51	0.62	0.74	0.84	0.33	0.42	0.52	0.64
		PI	1.14	1.14	1.14	1.14	1.15	1.15	1.15	1.15	1.13	1.13	1.13	1.13	1.13	1.13	1.13	1.13
	0	TC	20073	20278	20484	20690	21212	21212	21212	21415	21721	21721	21721	21721	22953	22953	22953	22953
		S/T	0.79	0.90	1.00	1.00	0.61	0.72	0.83	1.00	0.51	0.63	0.74	0.85	0.33	0.42	0.52	0.65
		PI	1.14	1.14	1.14	1.14	1.15	1.15	1.15	1.15	1.13	1.13	1.13	1.13	1.13	1.13	1.13	1.13
	5	TC	20014	20219	20424	20629	21173	21173	21173	21376	21689	21689	21689	21689	22937	22937	22937	22937
		S/T	0.79	0.90	1.00	1.00	0.61	0.72	0.83	1.00	0.51	0.63	0.74	0.85	0.33	0.42	0.52	0.65
		PI	1.14	1.14	1.14	1.14	1.15	1.15	1.15	1.15	1.13	1.13	1.13	1.13	1.14	1.14	1.14	1.14
	14	TC	19895	20099	20303	20507	21054	21054	21054	21256	21580	21580	21580	21580	22860	22860	22860	22860
		S/T	0.80	0.90	1.00	1.00	0.61	0.73	0.83	1.00	0.51	0.63	0.75	0.85	0.33	0.43	0.52	0.65
		PI	1.13	1.13	1.13	1.13	1.15	1.15	1.15	1.15	1.13	1.13	1.13	1.13	1.14	1.14	1.14	1.14
	23	TC	19777	19979	20182	20385	20975	20975	20975	21176	21501	21501	21501	21501	22801	22801	22801	22801
		S/T	0.80	0.91	1.00	1.00	0.61	0.73	0.84	1.00	0.52	0.63	0.75	0.86	0.33	0.43	0.53	0.65
		PI	1.13	1.13	1.13	1.13	1.15	1.15	1.15	1.15	1.13	1.13	1.13	1.13	1.14	1.14	1.14	1.14
	32	TC	19678	19879	20081	20283	20895	20895	20895	21096	21441	21441	21441	21441	22782	22782	22782	22782
		S/T	0.80	0.91	1.00	1.00	0.62	0.74	0.84	1.00	0.52	0.64	0.76	0.86	0.33	0.43	0.53	0.66
		PI	1.14	1.14	1.14	1.14	1.15	1.15	1.15	1.15	1.14	1.14	1.14	1.14	1.14	1.14	1.14	1.14
	41	TC	19579	19780	19980	20181	20816	20816	20816	21016	21372	21372	21372	21372	22763	22763	22763	22763
		S/T	0.81	0.92	0.99	0.99	0.62	0.74	0.85	1.00	0.52	0.64	0.76	0.87	0.33	0.43	0.53	0.66
		PI	1.15	1.15	1.15	1.15	1.16	1.16	1.16	1.16	1.14	1.14	1.14	1.14	1.15	1.15	1.15	1.15
	50	TC	19460	19660	19859	20058	20717	20717	20717	20916	21283	21283	21283	21283	22704	22704	22704	22704
		S/T	0.81	0.92	1.00	1.00	0.62	0.74	0.85	1.00	0.52	0.64	0.76	0.87	0.34	0.44	0.53	0.66
		PI	1.17	1.17	1.17	1.17	1.18	1.18	1.18	1.18	1.16	1.16	1.16	1.16	1.17	1.17	1.17	1.17
	59	TC	19302	19500	19698	19895	20578	20578	20578	20776	21154	21154	21154	21154	22607	22607	22607	22607
		S/T	0.82	0.93	1.00	1.00	0.63	0.75	0.86	0.98	0.53	0.65	0.77	0.88	0.34	0.44	0.54	0.67
		PI	1.20	1.20	1.20	1.20	1.21	1.21	1.21	1.21	1.19	1.19	1.19	1.19	1.19	1.19	1.19	1.19
	68	TC	19084	19280	19476	19671	20360	20360	20360	20556	20947	20947	20947	20947	22413	22413	22413	22413
		S/T	0.82	0.93	1.00	1.00	0.63	0.75	0.86	0.98	0.53	0.65	0.77	0.88	0.34	0.44	0.54	0.67
		PI	1.24	1.24	1.24	1.24	1.25	1.25	1.25	1.25	1.23	1.23	1.23	1.23	1.23	1.23	1.23	1.23
	77	TC	18204	18400	18596	18791	19480	19480	19480	19676	20067	20067	20067	20067	21533	21533	21533	21533
		S/T	0.83	0.95	1.00	1.00	0.62	0.75	0.88	1.00	0.55	0.66	0.79	0.90	0.34	0.44	0.56	0.68
		PI	1.38	1.38	1.38	1.38	1.38	1.38	1.38	1.38	1.38	1.38	1.38	1.38	1.38	1.38	1.38	1.38
	86	TC	17422	17618	17813	18009	18498	18498	18498	18693	18987	18987	18987	19388	20453	20453	20453	20453
		S/T	0.85	0.99	1.00	1.00	0.64	0.78	0.91	1.00	0.54	0.67	0.80	0.92	0.32	0.46	0.57	0.69
		PI	1.50	1.50	1.50	1.50	1.50	1.50	1.50	1.50	1.49	1.49	1.49	1.49	1.51	1.51	1.51	1.51
	95	TC	16542	16738	16933	17129	17618	17618	18020	18216	18107	18107	18400	18596	19476	19476	19476	19476
		S/T	0.87	1.00	1.00	1.00	0.65	0.79	0.92	1.00	0.56	0.68	0.83	0.93	0.32	0.45	0.58	0.69
		PI	1.64	1.64	1.64	1.64	1.64	1.64	1.64	1.64	1.65	1.65	1.65	1.65	1.67	1.67	1.67	1.67
	104	TC	15513	15664	15814	15965	16587	16587	16895	17089	17075	17075	17234	17429	18395	18395	18395	18395
		S/T	0.92	1.00	1.00	1.00	0.67	0.84	0.97	1.00	0.57	0.72	0.87	1.00	0.33	0.45	0.59	1.00
		PI	1.81	1.81	1.81	1.81	1.81	1.81	1.81	1.81	1.82	1.82	1.82	1.82	1.84	1.84	1.84	1.84
	115	TC	14341	14438	14536	14633	15418	15418	15613	15808	15905	15905	15905	16100	17172	17172	17172	17172
		S/T	0.92	1.00	1.00	1.00	0.68	0.84	0.99	1.00	0.58	0.73	0.87	1.00	0.31	0.47	0.60	1.00
		PI	2.01	2.01	2.01	2.01	2.02	2.02	2.02	2.02	2.03	2.03	2.03	2.03	2.04	2.04	2.04	2.04
	122	TC	13464	13561	13659	13756	14341	14341	14438	14536	14828	14828	14828	14926	16197	16197	16197	16197
		S/T	0.97	1.00	1.00	1.00	0.71	0.88	1.00	1.00	0.59	0.75	0.91	1.00	0.32	0.46	0.61	1.00
		PI	2.18	2.18	2.18	2.18	2.19	2.19	2.19	2.19	2.19	2.19	2.19	2.19	2.21	2.21	2.21	2.21

LEGEND

TC - Total Cooling Capacity (BTU/hr)
S/T - Sensible Cooling Capacity Ratio
PI - Power Input (kW)

Gray shaded area is Extrapolated Data

HEATING PERFORMANCE AT INDOOR DRY BULB TEMPERATURE - 18K (Sheet 1 of 2)

AIRFLOW (CFM)	OUTDOOR DB (F)	TC: TOTAL CAPACITY IN BTU/HR				PI: TOTAL POWER IN KILOWATTS			
		Indoor Conditions (DB F)				Indoor Conditions (DB F)			
		60.8	68.0	71.6	75.2	60.8	68.0	71.6	75.2
489	-22.0	8120	7994	7931	7931	0.98	1.01	1.01	1.02
	-10.0	9343	9199	9126	9126	1.15	1.19	1.19	1.20
	0.0	10363	10202	10122	10122	1.29	1.33	1.33	1.34
	5.0	10908	10739	10654	10654	1.37	1.41	1.41	1.42
	14.0	11647	11467	11376	11376	1.46	1.51	1.51	1.52
	17.0	12202	12013	11918	11918	1.55	1.60	1.60	1.61
	22.0	12807	12608	12509	12509	1.53	1.56	1.58	1.59
	27.0	13303	13204	13105	13005	1.50	1.53	1.55	1.56
	32.0	13800	13601	13502	13403	1.48	1.50	1.52	1.53
	37.0	14693	14495	14395	14296	1.46	1.49	1.50	1.52
	42.0	16182	15885	15785	15686	1.45	1.48	1.49	1.50
	44.6	17733	17407	16912	16813	1.45	1.47	1.49	1.50
	52.0	18593	18396	18297	18099	1.42	1.44	1.45	1.47
	57.0	19582	19286	19187	18989	1.40	1.42	1.43	1.44
	62.0	20473	20176	20077	19879	1.37	1.40	1.41	1.42
	64.4	20967	20670	20473	20374	1.37	1.39	1.40	1.41
530	-22.0	8260	8134	8134	8070	1.00	1.03	1.03	1.03
	-10.0	9504	9359	9359	9286	1.17	1.20	1.20	1.21
	0.0	10540	10379	10379	10299	1.31	1.35	1.35	1.36
	5.0	11095	10925	10925	10841	1.39	1.43	1.43	1.44
	14.0	11847	11666	11666	11576	1.48	1.53	1.53	1.54
	17.0	12411	12222	12222	12127	1.57	1.62	1.62	1.63
	22.0	13005	12807	12807	12708	1.55	1.58	1.60	1.61
	27.0	13601	13403	13303	13303	1.52	1.55	1.57	1.58
	32.0	13998	13800	13800	13700	1.49	1.52	1.54	1.55
	37.0	14991	14792	14693	14594	1.48	1.51	1.52	1.54
	42.0	16480	16282	16182	16083	1.47	1.50	1.51	1.52
	44.6	18019	17802	17308	17209	1.47	1.49	1.51	1.52
	52.0	19088	18791	18692	18593	1.44	1.46	1.47	1.49
	57.0	19978	19780	19582	19484	1.41	1.44	1.45	1.46
	62.0	20967	20670	20571	20374	1.39	1.42	1.43	1.44
	64.4	21462	21165	20967	20868	1.38	1.41	1.42	1.43

Manufacturer reserves the right to change, at any time, specifications and designs without notice and without obligations.

HEATING PERFORMANCE AT INDOOR DRY BULB TEMPERATURE - 18K (Sheet 2 of 2)

AIRFLOW (CFM)	OUTDOOR DB (F)	TC: TOTAL CAPACITY IN BTU/HR				PI: TOTAL POWER IN KILOWATTS			
		Indoor Conditions (DB F)				Indoor Conditions (DB F)			
		60.8	68.0	71.6	75.2	60.8	68.0	71.6	75.2
577	-22.0	8319	8193	8193	8130	1.01	1.04	1.04	1.05
	-10.0	9572	9427	9427	9354	1.18	1.22	1.22	1.23
	0.0	10616	10455	10455	10374	1.33	1.37	1.37	1.37
	5.0	11174	11005	11005	10920	1.40	1.45	1.45	1.46
	14.0	11932	11751	11751	11661	1.50	1.54	1.54	1.55
	17.0	12500	12310	12310	12216	1.59	1.64	1.64	1.65
	22.0	13105	12906	12906	12807	1.57	1.60	1.62	1.63
	27.0	13700	13601	13502	13403	1.54	1.57	1.59	1.60
	32.0	14197	13998	13899	13800	1.51	1.54	1.56	1.57
	37.0	15190	14991	14792	14693	1.50	1.53	1.54	1.56
	42.0	16679	16480	16381	16182	1.49	1.52	1.53	1.54
	44.6	18217	18000	17505	17407	1.48	1.51	1.53	1.54
	52.0	19286	18989	18890	18791	1.45	1.48	1.49	1.51
	57.0	20275	19978	19879	19681	1.43	1.46	1.47	1.49
	62.0	21264	20967	20769	20670	1.41	1.44	1.45	1.46
	64.4	21659	21363	21264	21066	1.40	1.43	1.44	1.45
618	-22.0	8378	8252	8252	8189	1.58	1.63	1.58	1.58
	-10.0	9640	9495	9495	9423	1.85	1.91	1.86	1.86
	0.0	10692	10531	10531	10450	2.07	2.15	2.08	2.08
	5.0	11254	11085	11085	11000	2.20	2.28	2.21	2.21
	14.0	12017	11836	11836	11746	2.34	2.43	2.35	2.35
	17.0	12589	12400	12400	12305	2.49	2.58	2.50	2.50
	22.0	13205	13006	13006	12907	2.39	2.40	2.40	2.40
	27.0	13800	13803	13703	13503	2.22	2.22	2.21	2.21
	32.0	14398	14200	13999	13900	2.06	2.04	2.04	2.03
	37.0	15391	15192	14892	14793	1.90	1.88	1.87	1.86
	42.0	16880	16681	16582	16282	1.74	1.71	1.70	1.69
	44.6	18417	18200	17706	17607	1.66	1.54	1.62	1.60
	52.0	19486	19189	19090	18991	1.42	1.38	1.36	1.33
	57.0	20576	20178	20180	19881	1.25	1.20	1.18	1.16
	62.0	21565	21268	20969	20971	1.10	1.04	1.01	0.98
	64.4	21859	21562	21565	21266	1.02	0.96	0.93	0.90

Gray shaded area is Extrapolated Data

Manufacturer reserves the right to change, at any time, specifications and designs without notice and without obligations.

COOLING PERFORMANCE AT INDOOR DRY BULB TEMPERATURE - 18K HH (Sheet 1 of 4)

AIRFLOW (CFM)	OUTDOOR (DB F)	ID WB (DB F)	60.8				64.4				66.2				71.6			
		ID DB (DB F)	73.4	77.0	80.6	84.2	73.4	77.0	80.6	84.2	73.4	77.0	80.6	84.2	73.4	77.0	80.6	84.2
489	-22	TC	19068	19078	19287	19495	19970	20392	20392	20598	20466	20466	20466	20466	21548	21548	21548	21548
		S/T	0.72	0.83	0.92	0.95	0.57	0.67	0.76	0.86	0.49	0.59	0.68	0.77	0.33	0.42	0.50	0.59
		PI	1.20	1.20	1.20	1.20	1.20	1.20	1.20	1.20	1.20	1.20	1.20	1.20	1.21	1.21	1.21	1.21
	-10	TC	18927	18937	19144	19351	19857	20276	20276	20481	20364	20364	20364	20364	21482	21482	21482	21482
		S/T	0.73	0.83	0.93	0.96	0.57	0.67	0.77	0.86	0.50	0.59	0.69	0.78	0.34	0.42	0.51	0.59
		PI	1.08	1.08	1.08	1.08	1.09	1.09	1.09	1.09	1.09	1.09	1.09	1.09	1.09	1.09	1.09	1.09
	0	TC	18810	18820	19026	19231	19762	20180	20180	20384	20279	20279	20279	20279	21428	21428	21428	21428
		S/T	0.73	0.84	0.93	0.96	0.58	0.67	0.77	0.87	0.50	0.60	0.69	0.78	0.34	0.42	0.51	0.60
		PI	1.01	1.01	1.01	1.01	1.01	1.01	1.01	1.01	1.01	1.01	1.01	1.01	1.01	1.01	1.01	1.01
	5	TC	18755	18765	18970	19175	19726	20143	20143	20346	20248	20248	20248	20248	21414	21414	21414	21414
		S/T	0.73	0.84	0.94	0.97	0.58	0.68	0.77	0.87	0.50	0.60	0.70	0.78	0.34	0.42	0.51	0.60
		PI	0.95	0.95	0.95	0.95	0.95	0.95	0.95	0.95	0.95	0.95	0.95	0.95	0.94	0.94	0.94	0.94
	14	TC	18643	18654	18857	19061	19615	20030	20030	20232	20146	20146	20146	20146	21341	21341	21341	21341
		S/T	0.74	0.84	0.94	0.97	0.58	0.68	0.78	0.87	0.50	0.60	0.70	0.79	0.34	0.43	0.51	0.60
		PI	0.95	0.94	0.94	0.95	0.95	0.95	0.95	0.95	0.95	0.95	0.95	0.95	0.94	0.94	0.94	0.94
	23	TC	18532	18542	18745	18948	19541	19954	19954	20156	20073	20073	20073	20073	21287	21287	21287	21287
		S/T	0.74	0.85	0.95	0.98	0.59	0.68	0.78	0.88	0.51	0.60	0.70	0.79	0.34	0.43	0.52	0.60
		PI	0.94	0.94	0.94	0.94	0.94	0.94	0.94	0.94	0.95	0.95	0.95	0.95	0.95	0.95	0.95	0.95
	32	TC	18440	18450	18651	18853	19468	19879	19879	20080	20017	20017	20017	20017	21269	21269	21269	21269
		S/T	0.74	0.85	0.95	0.98	0.59	0.69	0.78	0.88	0.51	0.61	0.71	0.79	0.34	0.43	0.52	0.61
		PI	0.95	0.94	0.94	0.95	0.95	0.95	0.95	0.95	0.95	0.95	0.95	0.95	0.95	0.95	0.95	0.95
	41	TC	18347	18357	18558	18758	19394	19803	19803	20003	19953	19953	19953	19953	21251	21251	21251	21251
		S/T	0.75	0.86	0.96	0.99	0.59	0.69	0.79	0.89	0.51	0.61	0.71	0.80	0.34	0.43	0.52	0.61
		PI	0.96	0.95	0.95	0.96	0.96	0.96	0.96	0.96	0.96	0.96	0.96	0.96	0.96	0.96	0.96	0.96
	50	TC	18236	18246	18445	18644	19301	19709	19709	19908	19869	19869	19869	19869	21196	21196	21196	21196
		S/T	0.75	0.86	0.96	0.99	0.59	0.69	0.79	0.89	0.51	0.61	0.71	0.80	0.35	0.44	0.52	0.61
		PI	0.97	0.97	0.97	0.97	0.97	0.97	0.97	0.97	0.97	0.97	0.97	0.97	0.97	0.97	0.97	0.97
	59	TC	18087	18097	18295	18493	19172	19577	19577	19775	19749	19749	19749	19749	21106	21106	21106	21106
		S/T	0.76	0.87	0.97	1.00	0.60	0.70	0.80	0.90	0.52	0.62	0.72	0.81	0.35	0.44	0.53	0.62
		PI	1.00	0.99	0.99	1.00	0.99	0.99	0.99	0.99	1.00	1.00	1.00	1.00	0.99	0.99	0.99	0.99
	68	TC	17884	17893	18089	18284	18969	18969	18969	19164	19556	19556	19556	19556	20924	20924	20924	20924
		S/T	0.76	0.87	0.97	1.00	0.60	0.70	0.80	0.90	0.52	0.62	0.72	0.81	0.35	0.44	0.53	0.62
		PI	1.03	1.03	1.03	1.03	1.03	1.03	1.03	1.03	1.03	1.03	1.03	1.03	1.02	1.02	1.02	1.02
	77	TC	17013	17209	17404	17600	18089	18089	18089	18284	18676	18676	18676	18676	20044	20044	20044	20044
		S/T	0.78	0.88	0.99	1.00	0.61	0.71	0.82	0.92	0.53	0.63	0.73	0.83	0.34	0.44	0.53	0.63
		PI	1.14	1.14	1.14	1.14	1.14	1.14	1.14	1.14	1.14	1.14	1.14	1.14	1.14	1.14	1.14	1.14
	86	TC	16231	16427	16622	16818	17307	17307	17307	17502	17796	17796	17796	17796	19164	19164	19164	19164
		S/T	0.79	0.90	1.00	1.00	0.61	0.72	0.83	0.94	0.53	0.64	0.74	0.85	0.34	0.44	0.54	0.64
		PI	1.24	1.24	1.24	1.24	1.24	1.24	1.24	1.24	1.25	1.25	1.25	1.25	1.25	1.25	1.25	1.25
	95	TC	15449	15644	15840	16036	16427	16427	16427	16622	16916	16916	17209	16916	18284	18284	18284	18284
		S/T	0.81	0.92	1.00	1.00	0.62	0.74	0.85	0.96	0.54	0.65	0.75	0.87	0.34	0.44	0.55	0.65
		PI	1.36	1.36	1.36	1.36	1.37	1.37	1.37	1.37	1.37	1.37	1.37	1.37	1.38	1.38	1.38	1.38
	104	TC	14606	14758	14910	15061	15543	15543	15587	15739	16033	16033	16194	16122	17317	17317	17317	17317
		S/T	0.84	0.97	1.00	1.00	0.64	0.76	0.89	1.00	0.54	0.67	0.79	0.91	0.33	0.45	0.56	0.67
		PI	1.50	1.50	1.50	1.50	1.51	1.51	1.51	1.51	1.51	1.51	1.51	1.51	1.52	1.52	1.52	1.52
	115	TC	13536	13634	13732	13831	14419	14419	14517	14615	14910	14910	14910	15106	16087	16087	16087	16087
		S/T	0.85	0.99	1.00	1.00	0.65	0.78	0.91	1.00	0.55	0.68	0.80	0.93	0.33	0.45	0.57	0.69
		PI	1.67	1.67	1.67	1.67	1.67	1.67	1.67	1.67	1.68	1.68	1.68	1.68	1.69	1.69	1.69	1.69
	122	TC	12654	12752	12850	12948	13536	13536	13634	13732	14027	14027	14027	14125	15204	15204	15204	15204
		S/T	0.88	1.00	1.00	1.00	0.66	0.80	0.94	1.00	0.56	0.69	0.83	0.96	0.33	0.45	0.58	0.70
		PI	1.81	1.81	1.81	1.81	1.82	1.82	1.82	1.82	1.82	1.82	1.82	1.82	1.84	1.84	1.84	1.84

Manufacturer reserves the right to change, at any time, specifications and designs without notice and without obligations.

COOLING PERFORMANCE AT INDOOR DRY BULB TEMPERATURE - 18K HH (Sheet 2 of 4)

AIRFLOW (CFM)	OUTDOOR (DB F)	ID WB (DB F)	60.8				64.4				66.2				71.6			
		ID DB (DB F)	73.4	77.0	80.6	84.2	73.4	77.0	80.6	84.2	73.4	77.0	80.6	84.2	73.4	77.0	80.6	84.2
530	-22	TC	19505	19713	19922	20131	20392	20392	20392	20598	20886	20886	20886	20886	22062	22062	22062	22062
		S/T	0.74	0.85	0.97	1.00	0.58	0.68	0.78	0.87	0.50	0.60	0.69	0.80	0.32	0.42	0.51	0.60
		PI	1.20	1.20	1.20	1.20	1.20	1.20	1.20	1.20	1.20	1.20	1.20	1.20	1.21	1.21	1.21	1.21
	-10	TC	19361	19568	19775	19982	20276	20276	20276	20481	20781	20781	20781	20781	21995	21995	21995	21995
		S/T	0.75	0.85	0.97	1.00	0.58	0.68	0.79	0.88	0.51	0.60	0.70	0.80	0.33	0.42	0.52	0.60
		PI	1.08	1.08	1.08	1.08	1.09	1.09	1.09	1.09	1.09	1.09	1.09	1.09	1.09	1.09	1.09	1.09
	0	TC	19241	19446	19652	19858	20180	20180	20180	20384	20694	20694	20694	20694	21940	21940	21940	21940
		S/T	0.75	0.86	0.98	1.00	0.59	0.68	0.79	0.89	0.51	0.61	0.70	0.81	0.33	0.42	0.52	0.61
		PI	1.04	1.04	1.04	1.04	1.03	1.03	1.03	1.03	1.04	1.04	1.04	1.04	1.03	1.03	1.03	1.03
	5	TC	19184	19390	19595	19800	20143	20143	20143	20346	20663	20663	20663	20663	21925	21925	21925	21925
		S/T	0.75	0.86	0.98	1.00	0.59	0.69	0.79	0.89	0.51	0.61	0.70	0.81	0.33	0.42	0.52	0.61
		PI	0.97	0.97	0.97	0.97	0.97	0.97	0.97	0.97	0.97	0.97	0.97	0.97	0.96	0.96	0.96	0.96
	14	TC	19071	19275	19479	19683	20030	20030	20030	20232	20560	20560	20560	20560	21851	21851	21851	21851
		S/T	0.76	0.86	0.99	1.00	0.59	0.69	0.80	0.89	0.51	0.61	0.71	0.82	0.33	0.43	0.52	0.61
		PI	0.97	0.97	0.97	0.97	0.96	0.96	0.96	0.96	0.97	0.97	0.97	0.97	0.96	0.96	0.96	0.96
	23	TC	18957	19160	19362	19565	19954	19954	19954	20156	20484	20484	20484	20484	21795	21795	21795	21795
		S/T	0.76	0.87	0.99	1.00	0.59	0.69	0.80	0.90	0.52	0.61	0.71	0.82	0.33	0.43	0.53	0.61
		PI	0.97	0.97	0.97	0.97	0.96	0.96	0.96	0.96	0.97	0.97	0.97	0.97	0.96	0.96	0.96	0.96
	32	TC	18862	19064	19266	19467	19879	19879	19879	20080	20428	20428	20428	20428	21776	21776	21776	21776
		S/T	0.76	0.87	1.00	1.00	0.60	0.70	0.80	0.90	0.52	0.62	0.72	0.82	0.33	0.43	0.53	0.62
		PI	0.97	0.97	0.97	0.97	0.97	0.97	0.97	0.97	0.97	0.97	0.97	0.97	0.97	0.97	0.97	0.97
	41	TC	18767	18968	19169	19370	19803	19803	19803	20003	20362	20362	20362	20362	21758	21758	21758	21758
		S/T	0.77	0.88	1.00	1.00	0.60	0.70	0.81	0.91	0.52	0.62	0.72	0.83	0.33	0.43	0.53	0.62
		PI	0.98	0.98	0.98	0.98	0.98	0.98	0.98	0.98	0.98	0.98	0.98	0.98	0.97	0.97	0.97	0.97
	50	TC	18654	18853	19053	19252	19709	19709	19709	19908	20277	20277	20277	20277	21702	21702	21702	21702
		S/T	0.77	0.88	1.00	1.00	0.60	0.70	0.81	0.91	0.52	0.62	0.72	0.83	0.34	0.44	0.53	0.62
		PI	1.00	1.00	1.00	1.00	0.99	0.99	0.99	0.99	0.99	0.99	0.99	0.99	0.99	0.99	0.99	0.99
	59	TC	18502	18700	18898	19096	19577	19577	19577	19775	20154	20154	20154	20154	21609	21609	21609	21609
		S/T	0.78	0.89	0.99	1.00	0.61	0.71	0.82	0.92	0.53	0.63	0.73	0.84	0.34	0.44	0.54	0.63
		PI	1.02	1.02	1.02	1.02	1.01	1.01	1.01	1.01	1.01	1.01	1.01	1.01	1.01	1.01	1.01	1.01
	68	TC	18293	18489	18685	18880	19370	19370	19370	19565	19957	19957	19957	19957	21424	21424	21424	21424
		S/T	0.78	0.89	0.99	1.00	0.61	0.71	0.82	0.92	0.53	0.63	0.73	0.84	0.34	0.44	0.54	0.63
		PI	1.06	1.06	1.06	1.06	1.05	1.05	1.05	1.05	1.05	1.05	1.05	1.05	1.04	1.04	1.04	1.04
	77	TC	17413	17609	17804	18000	18489	18489	18489	18685	19076	19076	19076	19076	20543	20543	20543	20543
		S/T	0.79	0.91	1.00	1.00	0.62	0.73	0.84	0.94	0.53	0.64	0.75	0.86	0.34	0.44	0.54	0.64
		PI	1.17	1.17	1.17	1.17	1.17	1.17	1.17	1.17	1.17	1.17	1.17	1.17	1.17	1.17	1.17	1.17
	86	TC	16630	16826	17022	17217	17707	17707	17707	17902	18196	18196	18196	18196	19663	19663	19663	19663
		S/T	0.81	0.93	1.00	1.00	0.62	0.74	0.85	0.97	0.54	0.65	0.76	0.88	0.34	0.44	0.55	0.65
		PI	1.27	1.27	1.27	1.27	1.27	1.27	1.27	1.27	1.27	1.27	1.27	1.27	1.28	1.28	1.28	1.28
	95	TC	15750	15946	16141	16337	16826	16826	16826	17022	17315	17315	17609	17804	18685	18685	18685	18685
		S/T	0.83	0.95	1.00	1.00	0.63	0.75	0.88	0.99	0.54	0.66	0.77	0.89	0.34	0.45	0.56	0.67
		PI	1.39	1.39	1.39	1.39	1.40	1.40	1.40	1.40	1.40	1.40	1.40	1.40	1.40	1.40	1.40	1.40
	104	TC	14813	14964	15115	15266	15798	15798	15886	16081	16285	16285	16445	16640	17606	17606	17606	17606
		S/T	0.86	1.00	1.00	1.00	0.65	0.78	0.91	1.00	0.55	0.68	0.81	0.93	0.33	0.45	0.57	0.69
		PI	1.54	1.54	1.54	1.54	1.55	1.55	1.55	1.55	1.55	1.55	1.55	1.55	1.56	1.56	1.56	1.56
	115	TC	13750	13847	13945	14042	14627	14627	14822	15017	15115	15115	15115	15310	16383	16383	16383	16383
		S/T	0.88	1.00	1.00	1.00	0.66	0.80	0.93	1.00	0.56	0.69	0.83	0.96	0.33	0.45	0.58	0.70
		PI	1.71	1.71	1.71	1.71	1.72	1.72	1.72	1.72	1.73	1.73	1.73	1.73	1.74	1.74	1.74	1.74
	122	TC	12872	12970	13067	13165	13750	13750	13847	13945	14237	14237	14237	14335	15407	15407	15407	15407
		S/T	0.90	1.00	1.00	1.00	0.67	0.82	0.97	1.00	0.57	0.71	0.85	0.99	0.32	0.46	0.59	0.91
		PI	1.86	1.86	1.86	1.86	1.87	1.87	1.87	1.87	1.87	1.87	1.87	1.87	1.89	1.89	1.89	1.89

COOLING PERFORMANCE AT INDOOR DRY BULB TEMPERATURE - 18K HH (Sheet 3 of 4)

AIRFLOW (CFM)	OUTDOOR (DB F)	ID WB (DB F)	60.8				64.4				66.2				71.6			
		ID DB (DB F)	73.4	77.0	80.6	84.2	73.4	77.0	80.6	84.2	73.4	77.0	80.6	84.2	73.4	77.0	80.6	84.2
577	-22	TC	19922	20131	20339	20548	20907	20907	20907	21113	21397	21397	21397	21397	22566	22566	22566	22566
		S/T	0.76	0.87	1.00	1.00	0.59	0.69	0.80	0.96	0.50	0.61	0.71	0.82	0.32	0.42	0.51	0.62
		PI	1.20	1.20	1.20	1.20	1.20	1.20	1.20	1.20	1.20	1.20	1.20	1.20	1.21	1.21	1.21	1.21
	-10	TC	19775	19982	20189	20396	20788	20788	20788	20993	21291	21291	21291	21291	22497	22497	22497	22497
		S/T	0.77	0.87	1.00	1.00	0.59	0.70	0.80	0.97	0.51	0.61	0.72	0.82	0.33	0.42	0.52	0.62
		PI	1.08	1.08	1.08	1.08	1.09	1.09	1.09	1.09	1.09	1.09	1.09	1.09	1.09	1.09	1.09	1.09
	0	TC	19652	19858	20064	20270	20689	20689	20689	20893	21202	21202	21202	21202	22440	22440	22440	22440
		S/T	0.77	0.88	1.00	1.00	0.60	0.70	0.81	0.97	0.51	0.62	0.72	0.83	0.33	0.42	0.52	0.63
		PI	1.06	1.06	1.06	1.06	1.05	1.05	1.05	1.05	1.06	1.06	1.06	1.06	1.06	1.06	1.06	1.06
	5	TC	19595	19800	20005	20210	20651	20651	20651	20855	21170	21170	21170	21170	22425	22425	22425	22425
		S/T	0.77	0.88	1.00	1.00	0.60	0.70	0.81	0.98	0.51	0.62	0.72	0.83	0.33	0.42	0.52	0.63
		PI	0.99	0.99	0.99	0.99	0.98	0.98	0.98	0.98	0.99	0.99	0.99	0.99	0.99	0.99	0.99	0.99
	14	TC	19479	19683	19887	20091	20535	20535	20535	20738	21063	21063	21063	21063	22349	22349	22349	22349
		S/T	0.78	0.88	1.00	1.00	0.60	0.71	0.82	0.98	0.51	0.62	0.73	0.83	0.33	0.43	0.52	0.63
		PI	0.99	0.99	0.99	0.99	0.98	0.98	0.98	0.98	0.98	0.98	0.98	0.98	0.99	0.99	0.99	0.99
	23	TC	19362	19565	19768	19971	20458	20458	20458	20660	20986	20986	20986	20986	22292	22292	22292	22292
		S/T	0.78	0.89	1.00	1.00	0.60	0.71	0.82	0.99	0.52	0.62	0.73	0.84	0.33	0.43	0.53	0.63
		PI	0.99	0.99	0.99	0.99	0.98	0.98	0.98	0.98	0.98	0.98	0.98	0.98	0.99	0.99	0.99	0.99
	32	TC	19266	19467	19669	19871	20381	20381	20381	20582	20928	20928	20928	20928	22274	22274	22274	22274
		S/T	0.78	0.89	1.00	1.00	0.61	0.72	0.82	0.99	0.52	0.63	0.74	0.84	0.33	0.43	0.53	0.64
		PI	0.99	0.99	0.99	0.99	0.98	0.98	0.98	0.98	0.99	0.99	0.99	0.99	0.99	0.99	0.99	0.99
	41	TC	19169	19370	19570	19771	20303	20303	20303	20503	20861	20861	20861	20861	22255	22255	22255	22255
		S/T	0.79	0.90	1.00	1.00	0.61	0.72	0.83	1.00	0.52	0.63	0.74	0.85	0.33	0.43	0.53	0.64
		PI	1.00	1.00	1.00	1.00	0.99	0.99	0.99	0.99	1.00	1.00	1.00	1.00	1.00	1.00	1.00	1.00
	50	TC	19053	19252	19452	19651	20207	20207	20207	20406	20774	20774	20774	20774	22198	22198	22198	22198
		S/T	0.79	0.90	1.00	1.00	0.61	0.72	0.83	1.00	0.52	0.63	0.74	0.85	0.34	0.44	0.53	0.64
		PI	1.02	1.02	1.02	1.02	1.01	1.01	1.01	1.01	1.01	1.01	1.01	1.01	1.01	1.01	1.01	1.01
	59	TC	18898	19096	19294	19491	20071	20071	20071	20269	20648	20648	20648	20648	22103	22103	22103	22103
		S/T	0.80	0.91	1.00	1.00	0.62	0.73	0.84	0.95	0.53	0.64	0.75	0.86	0.34	0.44	0.54	0.65
		PI	1.04	1.04	1.04	1.04	1.03	1.03	1.03	1.03	1.03	1.03	1.03	1.03	1.04	1.04	1.04	1.04
	68	TC	18685	18880	19076	19272	19859	19859	19859	20054	20446	20446	20446	20446	21913	21913	21913	21913
		S/T	0.80	0.91	1.00	1.00	0.62	0.73	0.84	0.95	0.53	0.64	0.75	0.86	0.34	0.44	0.54	0.65
		PI	1.08	1.08	1.08	1.08	1.07	1.07	1.07	1.07	1.07	1.07	1.07	1.07	1.07	1.07	1.07	1.07
	77	TC	17804	18000	18196	18391	18978	18978	18978	19174	19565	19565	19565	19565	21033	21033	21033	21033
		S/T	0.81	0.93	1.00	1.00	0.62	0.74	0.86	0.97	0.54	0.65	0.77	0.88	0.34	0.44	0.55	0.66
		PI	1.19	1.19	1.19	1.19	1.19	1.19	1.19	1.19	1.19	1.19	1.19	1.19	1.19	1.19	1.19	1.19
	86	TC	17022	17217	17413	17609	18098	18098	18098	18293	18587	18587	18587	18783	20054	20054	20054	20054
		S/T	0.83	0.96	1.00	1.00	0.63	0.76	0.88	1.00	0.54	0.66	0.78	0.90	0.33	0.45	0.56	0.67
		PI	1.30	1.30	1.30	1.30	1.30	1.30	1.30	1.30	1.30	1.30	1.30	1.30	1.31	1.31	1.31	1.31
	95	TC	16141	16337	16533	16728	17217	17217	17413	17609	17707	17707	18000	18196	19076	19076	19076	19076
		S/T	0.85	0.98	1.00	1.00	0.64	0.77	0.90	1.00	0.55	0.67	0.80	0.91	0.33	0.45	0.57	0.68
		PI	1.42	1.42	1.42	1.42	1.42	1.42	1.42	1.42	1.43	1.43	1.43	1.43	1.44	1.44	1.44	1.44
	104	TC	15159	15310	15461	15611	16188	16188	16383	16578	16675	16675	16835	17030	17996	17996	17996	17996
		S/T	0.89	1.00	1.00	1.00	0.66	0.81	0.94	1.00	0.56	0.70	0.84	0.97	0.33	0.45	0.58	0.90
		PI	1.57	1.57	1.57	1.57	1.58	1.58	1.58	1.58	1.58	1.58	1.58	1.58	1.60	1.60	1.60	1.60
	115	TC	14042	14140	14237	14335	15017	15017	15212	15407	15505	15505	15505	15700	16773	16773	16773	16773
		S/T	0.90	1.00	1.00	1.00	0.67	0.82	0.96	1.00	0.57	0.71	0.85	0.99	0.32	0.46	0.59	0.92
		PI	1.75	1.75	1.75	1.75	1.76	1.76	1.76	1.76	1.76	1.76	1.76	1.76	1.78	1.78	1.78	1.78
	122	TC	13165	13262	13360	13457	14042	14042	14140	14237	14530	14530	14530	14627	15798	15798	15798	15798
		S/T	0.93	1.00	1.00	1.00	0.69	0.85	1.00	1.00	0.58	0.73	0.88	1.00	0.32	0.46	0.60	0.97
		PI	1.90	1.90	1.90	1.90	1.91	1.91	1.91	1.91	1.91	1.91	1.91	1.91	1.93	1.93	1.93	1.93

Manufacturer reserves the right to change, at any time, specifications and designs without notice and without obligations.

COOLING PERFORMANCE AT INDOOR DRY BULB TEMPERATURE - 18K HH (Sheet 4 of 4)

AIRFLOW (CFM)	OUTDOOR (DB F)	ID WB (DB F)	60.8				64.4				66.2				71.6			
		ID DB (DB F)	73.4	77.0	80.6	84.2	73.4	77.0	80.6	84.2	73.4	77.0	80.6	84.2	73.4	77.0	80.6	84.2
618	-22	TC	20348	20557	20765	20974	21435	21435	21435	21641	21922	21922	21922	21922	23081	23081	23081	23081
		S/T	0.78	0.88	1.00	1.00	0.60	0.71	0.82	1.05	0.50	0.62	0.73	0.84	0.32	0.42	0.51	0.64
		PI	1.01	1.01	1.01	1.01	1.00	1.00	1.00	1.00	1.00	1.00	1.00	1.00	1.01	1.01	1.01	1.01
	-10	TC	20198	20405	20612	20819	21313	21313	21313	21518	21812	21812	21812	21812	23011	23011	23011	23011
		S/T	0.79	0.89	1.0 0	1.00	0.60	0.72	0.82	1.00	0.51	0.62	0.74	0.84	0.33	0.42	0.52	0.64
		PI	1.01	1.01	1.01	1.01	1.00	1.00	1.00	1.00	1.00	1.00	1.00	1.00	1.01	1.01	1.01	1.01
	0	TC	20073	20278	20484	20690	21212	21212	21212	21415	21721	21721	21721	21721	22953	22953	22953	22953
		S/T	0.79	0.90	1.00	1.00	0.61	0.72	0.83	1.00	0.51	0.63	0.74	0.85	0.33	0.42	0.52	0.65
		PI	1.01	1.01	1.01	1.01	1.00	1.00	1.00	1.00	1.00	1.00	1.00	1.00	1.02	1.02	1.02	1.02
	5	TC	20014	20219	20424	20629	21173	21173	21173	21376	21689	21689	21689	21689	22937	22937	22937	22937
		S/T	0.79	0.90	1.00	1.00	0.61	0.72	0.83	1.00	0.51	0.63	0.74	0.85	0.33	0.42	0.52	0.65
		PI	1.01	1.01	1.01	1.01	1.00	1.00	1.00	1.00	1.00	1.00	1.00	1.00	1.02	1.02	1.02	1.02
	14	TC	19895	20099	20303	20507	21054	21054	21054	21256	21580	21580	21580	21580	22860	22860	22860	22860
		S/T	0.80	0.90	1.00	1.00	0.61	0.73	0.83	1.00	0.51	0.63	0.75	0.85	0.33	0.43	0.52	0.65
		PI	1.01	1.01	1.01	1.01	1.00	1.00	1.00	1.00	1.00	1.00	1.00	1.00	1.02	1.02	1.02	1.02
	23	TC	19777	19979	20182	20385	20975	20975	20975	21176	21501	21501	21501	21501	22801	22801	22801	22801
		S/T	0.80	0.91	1.00	1.00	0.61	0.73	0.84	1.00	0.52	0.63	0.75	0.86	0.33	0.43	0.53	0.65
		PI	1.00	1.00	1.00	1.00	1.00	1.00	1.00	1.00	1.00	1.00	1.00	1.00	1.02	1.02	1.02	1.02
	32	TC	19678	19879	20081	20283	20895	20895	20895	21096	21441	21441	21441	21441	22782	22782	22782	22782
		S/T	0.80	0.91	1.00	1.00	0.62	0.74	0.84	1.00	0.52	0.64	0.76	0.86	0.33	0.43	0.53	0.66
		PI	1.01	1.01	1.01	1.01	1.00	1.00	1.00	1.00	1.01	1.01	1.01	1.01	1.02	1.02	1.02	1.02
	41	TC	19579	19780	19980	20181	20816	20816	20816	21016	21372	21372	21372	21372	22763	22763	22763	22763
		S/T	0.81	0.92	0.99	0.99	0.62	0.74	0.85	1.00	0.52	0.64	0.76	0.87	0.33	0.43	0.53	0.66
		PI	1.02	1.02	1.02	1.02	1.01	1.01	1.01	1.01	1.01	1.01	1.01	1.01	1.03	1.03	1.03	1.03
	50	TC	19460	19660	19859	20058	20717	20717	20717	20916	21283	21283	21283	21283	22704	22704	22704	22704
		S/T	0.81	0.92	1.00	1.00	0.62	0.74	0.85	1.00	0.52	0.64	0.76	0.87	0.34	0.44	0.53	0.66
		PI	1.04	1.04	1.04	1.04	1.03	1.03	1.03	1.03	1.03	1.03	1.03	1.03	1.04	1.04	1.04	1.04
	59	TC	19302	19500	19698	19895	20578	20578	20578	20776	21154	21154	21154	21154	22607	22607	22607	22607
		S/T	0.82	0.93	1.00	1.00	0.63	0.75	0.86	0.98	0.53	0.65	0.77	0.88	0.34	0.44	0.54	0.67
		PI	1.06	1.06	1.06	1.06	1.05	1.05	1.05	1.05	1.05	1.05	1.05	1.05	1.07	1.07	1.07	1.07
	68	TC	19084	19280	19476	19671	20360	20360	20360	20556	20947	20947	20947	20947	22413	22413	22413	22413
		S/T	0.82	0.93	1.00	1.00	0.63	0.75	0.86	0.98	0.53	0.65	0.77	0.88	0.34	0.44	0.54	0.67
		PI	1.10	1.10	1.10	1.10	1.09	1.09	1.09	1.09	1.09	1.09	1.09	1.09	1.10	1.10	1.10	1.10
	77	TC	18204	18400	18596	18791	19480	19480	19480	19676	20067	20067	20067	20067	21533	21533	21533	21533
		S/T	0.83	0.95	1.00	1.00	0.62	0.75	0.88	1.00	0.55	0.66	0.79	0.90	0.34	0.44	0.56	0.68
		PI	1.21	1.21	1.21	1.21	1.21	1.21	1.21	1.21	1.21	1.21	1.21	1.21	1.21	1.21	1.21	1.21
	86	TC	17422	17618	17813	18009	18498	18498	18498	18693	18987	18987	18987	19388	20453	20453	20453	20453
		S/T	0.85	0.99	1.00	1.00	0.64	0.78	0.91	1.00	0.54	0.67	0.80	0.92	0.32	0.46	0.57	0.69
		PI	1.33	1.33	1.33	1.33	1.33	1.33	1.33	1.33	1.33	1.33	1.33	1.33	1.34	1.34	1.34	1.34
	95	TC	16542	16738	16933	17129	17618	17618	18020	18216	18107	18107	18400	18596	19476	19476	19476	19476
		S/T	0.87	1.00	1.00	1.00	0.65	0.79	0.92	1.00	0.56	0.68	0.83	0.93	0.32	0.45	0.58	0.69
		PI	1.45	1.45	1.45	1.45	1.44	1.44	1.44	1.44	1.46	1.46	1.46	1.46	1.48	1.48	1.48	1.48
	104	TC	15513	15664	15814	15965	16587	16587	16895	17089	17075	17075	17234	17429	18395	18395	18395	18395
		S/T	0.92	1.00	1.00	1.00	0.67	0.84	0.97	1.00	0.57	0.72	0.87	1.00	0.33	0.45	0.59	1.00
		PI	1.61	1.61	1.61	1.61	1.61	1.61	1.61	1.61	1.61	1.61	1.61	1.61	1.64	1.64	1.64	1.64
	115	TC	14341	14438	14536	14633	15418	15418	15613	15808	15905	15905	15905	16100	17172	17172	17172	17172
		S/T	0.92	1.00	1.00	1.00	0.68	0.84	0.99	1.00	0.58	0.73	0.87	1.00	0.31	0.47	0.60	1.00
		PI	1.79	1.79	1.79	1.79	1.80	1.80	1.80	1.80	1.79	1.79	1.79	1.79	1.82	1.82	1.82	1.82
	122	TC	13464	13561	13659	13756	14341	14341	14438	14536	14828	14828	14828	14926	16197	16197	16197	16197
		S/T	0.97	1.00	1.00	1.00	0.71	0.88	1.00	1.00	0.59	0.75	0.91	1.00	0.32	0.46	0.61	1.00
		PI	1.94	1.94	1.94	1.94	1.95	1.95	1.95	1.95	1.95	1.95	1.95	1.95	1.97	1.97	1.97	1.97

LEGEND

TC - Total Cooling Capacity (BTU/hr)
S/T - Sensible Cooling Capacity Ratio
PI - Power Input (kW)

Gray shaded area is Extrapolated Data

HEATING PERFORMANCE AT INDOOR DRY BULB TEMPERATURE - 18K HH (Sheet 1 of 2)

AIRFLOW (CFM)	OUTDOOR DB (F)	TC: TOTAL CAPACITY IN BTU/HR				PI: TOTAL POWER IN KILOWATTS			
		Indoor Conditions (DB F)				Indoor Conditions (DB F)			
		60.8	68.0	71.6	75.2	60.8	68.0	71.6	75.2
489	-22.0	13894	13826	13758	13690	1.65	1.72	1.65	1.66
	-10.0	15987	15909	15830	15752	1.94	2.01	1.94	1.94
	0.0	17731	17644	17557	17470	2.17	2.25	2.17	2.18
	5.0	18664	18572	18481	18389	2.30	2.39	2.30	2.31
	14.0	19929	19831	19734	19636	2.45	2.55	2.45	2.46
	17.0	20878	20776	20673	20571	2.61	2.71	2.61	2.62
	22.0	20182	20083	19984	19885	2.51	2.50	2.50	2.50
	27.0	19490	19292	19193	19094	2.31	2.30	2.29	2.29
	32.0	18500	18401	18302	18204	2.11	2.09	2.08	2.07
	37.0	18204	18006	17907	17709	1.93	1.90	1.89	1.87
	42.0	18302	18105	18006	17907	1.76	1.72	1.70	1.69
	44.6	18607	18406	18505	18406	1.66	1.51	1.60	1.58
	52.0	18307	18109	17911	17813	1.38	1.33	1.30	1.27
	57.0	18010	17714	17516	17417	1.19	1.14	1.11	1.07
	62.0	17615	17318	17120	17021	1.01	0.94	0.90	0.87
	64.4	17417	17120	16922	16823	0.92	0.85	0.81	0.77
530	-22.0	14271	14135	14066	14066	1.67	1.73	1.67	1.67
	-10.0	16421	16263	16185	16185	1.96	2.03	1.96	1.96
	0.0	18212	18038	17950	17950	2.20	2.28	2.20	2.20
	5.0	19170	18986	18895	18895	2.33	2.41	2.33	2.33
	14.0	20470	20274	20176	20176	2.48	2.57	2.48	2.48
	17.0	21444	21239	21136	21136	2.64	2.73	2.64	2.64
	22.0	20677	20479	20380	20380	2.53	2.53	2.53	2.53
	27.0	19885	19688	19589	19589	2.33	2.32	2.32	2.31
	32.0	18995	18797	18698	18599	2.14	2.12	2.11	2.10
	37.0	18599	18401	18204	18105	1.95	1.92	1.91	1.90
	42.0	18797	18500	18401	18302	1.78	1.74	1.73	1.71
	44.6	19104	18802	18901	18802	1.68	1.53	1.62	1.60
	52.0	18703	18505	18307	18208	1.40	1.34	1.32	1.29
	57.0	18307	18109	17911	17813	1.21	1.16	1.12	1.09
	62.0	18010	17714	17516	17318	1.03	0.96	0.92	0.88
	64.4	17813	17516	17318	17120	0.94	0.86	0.82	0.78

Manufacturer reserves the right to change, at any time, specifications and designs without notice and without obligations.

HEATING PERFORMANCE AT INDOOR DRY BULB TEMPERATURE - 18K HH (Sheet 2 of 2)

AIRFLOW (CFM)	OUTDOOR DB (F)	TC: TOTAL CAPACITY IN BTU/HR				PI: TOTAL POWER IN KILOWATTS			
		Indoor Conditions (DB F)				Indoor Conditions (DB F)			
		60.8	68.0	71.6	75.2	60.8	68.0	71.6	75.2
577	-22.0	14424	14287	14287	14219	1.68	1.75	1.68	1.69
	-10.0	16596	16439	16439	16360	1.97	2.05	1.97	1.98
	0.0	18407	18232	18232	18145	2.21	2.30	2.21	2.22
	5.0	19375	19191	19191	19100	2.35	2.43	2.35	2.35
	14.0	20689	20492	20492	20394	2.50	2.59	2.50	2.51
	17.0	21674	21468	21468	21366	2.66	2.76	2.66	2.67
	22.0	20875	20677	20677	20578	2.55	2.55	2.55	2.55
	27.0	20083	19885	19885	19786	2.35	2.34	2.34	2.33
	32.0	19193	18995	18896	18797	2.16	2.14	2.13	2.12
	37.0	18797	18599	18401	18302	1.97	1.95	1.93	1.92
	42.0	18995	18698	18599	18500	1.80	1.76	1.75	1.73
	44.6	19302	19000	19099	19000	1.70	1.55	1.64	1.62
	52.0	18901	18703	18505	18406	1.42	1.36	1.34	1.31
	57.0	18505	18208	18109	18010	1.23	1.16	1.14	1.11
	62.0	18109	17813	17714	17516	1.05	0.98	0.94	0.90
	64.4	18010	17615	17516	17318	0.96	0.88	0.84	0.80
618	-22.0	14578	14441	14511	14373	1.70	1.76	1.70	1.71
	-10.0	16774	16616	16697	16538	1.99	2.06	1.99	2.00
	0.0	18604	18429	18518	18342	2.23	2.31	2.23	2.25
	5.0	19582	19398	19493	19307	2.36	2.45	2.36	2.38
	14.0	20910	20714	20814	20615	2.52	2.62	2.52	2.54
	17.0	21906	21700	21805	21597	2.68	2.78	2.68	2.70
	22.0	21074	20877	20978	20778	2.57	2.57	2.57	2.57
	27.0	20283	20085	20187	19986	2.37	2.36	2.36	2.35
	32.0	19393	19195	19096	18997	2.18	2.16	2.15	2.14
	37.0	18997	18799	18601	18502	1.99	1.98	1.95	1.94
	42.0	19195	18898	18799	18700	1.82	1.78	1.77	1.75
	44.6	19502	19200	19299	19200	1.72	1.57	1.66	1.64
	52.0	19101	18903	18705	18606	1.44	1.38	1.36	1.33
	57.0	18705	18308	18309	18211	1.25	1.17	1.16	1.13
	62.0	18209	17912	17914	17716	1.07	1.00	0.96	0.92
	64.4	18211	17714	17716	17518	0.98	0.90	0.86	0.82

Gray shaded area is Extrapolated Data

COOLING PERFORMANCE - 24K (Sheet 1 of 4)

AIRFLOW (CFM)	OUTDOOR DB (F)	ID WB (F)	60.8				64.4				66.2				71.6			
		ID DB (F)	73.4	77.0	80.6	84.2	73.4	77.0	80.6	84.2	73.4	77.0	80.6	84.2	73.4	77.0	80.6	84.2
630	-22	TC	25495	25474	25683	25891	26699	27226	27226	27535	27361	27361	27361	27361	28838	28838	28838	28838
		S/T	0.72	0.82	0.91	0.95	0.57	0.66	0.75	0.84	0.49	0.58	0.68	0.76	0.33	0.42	0.49	0.58
		PI	1.78	1.79	1.79	1.78	1.79	1.79	1.79	1.79	1.80	1.80	1.80	1.80	1.81	1.81	1.81	1.81
	-10	TC	25306	25286	25493	25700	26547	27072	27072	27379	27224	27224	27224	27224	28751	28751	28751	28751
		S/T	0.73	0.82	0.92	0.96	0.57	0.66	0.76	0.84	0.50	0.58	0.68	0.77	0.34	0.42	0.50	0.58
		PI	1.61	1.62	1.62	1.61	1.62	1.62	1.62	1.62	1.62	1.62	1.62	1.62	1.63	1.63	1.63	1.63
	0	TC	25149	25129	25335	25541	26421	26943	26943	27249	27110	27110	27110	27110	28678	28678	28678	28678
		S/T	0.73	0.83	0.92	0.96	0.58	0.67	0.76	0.85	0.50	0.59	0.68	0.77	0.34	0.42	0.50	0.59
		PI	1.51	1.51	1.51	1.51	1.51	1.51	1.51	1.51	1.51	1.51	1.51	1.51	1.51	1.51	1.51	1.51
	5	TC	25076	25055	25261	25466	26373	26894	26894	27199	27070	27070	27070	27070	28659	28659	28659	28659
		S/T	0.73	0.83	0.93	0.97	0.58	0.67	0.76	0.85	0.50	0.59	0.69	0.77	0.34	0.42	0.50	0.59
		PI	1.42	1.42	1.42	1.42	1.41	1.41	1.41	1.41	1.41	1.41	1.41	1.41	1.41	1.41	1.41	1.41
	14	TC	24927	24907	25111	25315	26225	26743	26743	27046	26934	26934	26934	26934	28562	28562	28562	28562
		S/T	0.74	0.83	0.93	0.97	0.58	0.67	0.77	0.85	0.50	0.59	0.69	0.78	0.34	0.43	0.50	0.59
		PI	1.41	1.41	1.41	1.41	1.41	1.41	1.41	1.41	1.41	1.41	1.41	1.41	1.41	1.41	1.41	1.41
	23	TC	24778	24758	24961	25164	26126	26642	26642	26945	26835	26835	26835	26835	28489	28489	28489	28489
		S/T	0.74	0.84	0.94	0.98	0.59	0.67	0.77	0.86	0.51	0.59	0.69	0.78	0.34	0.43	0.51	0.59
		PI	1.41	1.41	1.41	1.41	1.41	1.41	1.41	1.41	1.41	1.41	1.41	1.41	1.41	1.41	1.41	1.41
	32	TC	24655	24634	24836	25038	26027	26541	26541	26843	26761	26761	26761	26761	28465	28465	28465	28465
		S/T	0.74	0.84	0.94	0.98	0.59	0.68	0.77	0.86	0.51	0.60	0.70	0.78	0.34	0.43	0.51	0.60
		PI	1.41	1.42	1.42	1.41	1.41	1.41	1.41	1.41	1.42	1.42	1.42	1.42	1.42	1.42	1.42	1.42
	41	TC	24531	24511	24712	24912	25928	26440	26440	26741	26675	26675	26675	26675	28441	28441	28441	28441
		S/T	0.75	0.85	0.95	0.99	0.59	0.68	0.78	0.87	0.51	0.60	0.70	0.79	0.34	0.43	0.51	0.60
		PI	1.42	1.43	1.43	1.42	1.42	1.42	1.42	1.42	1.43	1.43	1.43	1.43	1.43	1.43	1.43	1.43
	50	TC	24382	24362	24562	24761	25805	26314	26314	26614	26563	26563	26563	26563	28368	28368	28368	28368
		S/T	0.75	0.85	0.95	0.99	0.59	0.69	0.78	0.87	0.51	0.60	0.70	0.79	0.35	0.44	0.51	0.60
		PI	1.45	1.45	1.45	1.45	1.45	1.45	1.45	1.45	1.45	1.45	1.45	1.45	1.45	1.45	1.45	1.45
	59	TC	24184	24164	24362	24560	25632	26138	26138	26435	26403	26403	26403	26403	28247	28247	28247	28247
		S/T	0.76	0.86	0.96	1.00	0.60	0.69	0.79	0.88	0.52	0.61	0.71	0.80	0.35	0.44	0.52	0.61
		PI	1.48	1.49	1.49	1.48	1.48	1.48	1.48	1.48	1.48	1.48	1.48	1.48	1.48	1.48	1.48	1.48
	68	TC	23911	23892	24088	24283	25360	25360	25360	25654	26144	26144	26144	26144	28004	28004	28004	28004
		S/T	0.76	0.86	0.96	1.00	0.60	0.69	0.79	0.88	0.52	0.61	0.71	0.80	0.35	0.44	0.52	0.61
		PI	1.54	1.54	1.54	1.54	1.53	1.53	1.53	1.53	1.53	1.53	1.53	1.53	1.52	1.52	1.52	1.52
	77	TC	22815	22815	23010	23206	24185	24185	24185	24381	24969	24969	24969	24969	26829	26829	26829	26829
		S/T	0.77	0.87	0.98	1.00	0.60	0.70	0.80	0.90	0.52	0.62	0.72	0.82	0.35	0.44	0.53	0.62
		PI	1.69	1.69	1.69	1.69	1.69	1.69	1.69	1.69	1.69	1.69	1.69	1.69	1.69	1.69	1.69	1.69
	86	TC	21738	21933	22129	22325	23108	23108	23108	23304	23794	23794	23794	23794	25654	25654	25654	25654
		S/T	0.78	0.89	1.00	1.00	0.61	0.71	0.82	0.92	0.53	0.63	0.73	0.84	0.34	0.44	0.53	0.63
		PI	1.85	1.85	1.85	1.85	1.85	1.85	1.85	1.85	1.85	1.85	1.85	1.85	1.86	1.86	1.86	1.86
	95	TC	20660	20856	21052	21248	21933	21933	21933	22129	22619	22619	23010	22619	24479	24479	24479	24479
		S/T	0.80	0.91	1.00	1.00	0.62	0.73	0.84	0.95	0.53	0.64	0.74	0.86	0.34	0.44	0.54	0.64
		PI	2.03	2.03	2.03	2.03	2.03	2.03	2.03	2.03	2.04	2.04	2.04	2.04	2.05	2.05	2.05	2.05
	104	TC	19492	19689	19885	20081	20723	20723	20812	21008	21410	21410	21624	21499	23139	23139	23139	23139
		S/T	0.83	0.95	1.00	1.00	0.63	0.75	0.88	0.99	0.54	0.66	0.78	0.89	0.34	0.45	0.55	0.66
		PI	2.24	2.24	2.24	2.24	2.24	2.24	2.24	2.24	2.25	2.25	2.25	2.25	2.26	2.26	2.26	2.26
	115	TC	18048	18244	18440	18636	19225	19225	19421	19617	19911	19911	19911	20108	21481	21481	21481	21481
		S/T	0.84	0.97	1.00	1.00	0.64	0.77	0.89	1.00	0.55	0.67	0.79	0.91	0.33	0.45	0.56	0.68
		PI	2.48	2.48	2.48	2.48	2.50	2.50	2.50	2.50	2.50	2.50	2.50	2.50	2.52	2.52	2.52	2.52
	122	TC	16871	17067	17263	17459	18048	18048	18244	18440	18734	18734	18734	18931	20304	20304	20304	20304
		S/T	0.87	1.00	1.00	1.00	0.65	0.79	0.92	1.00	0.55	0.68	0.81	0.94	0.33	0.45	0.57	0.69
		PI	2.70	2.70	2.70	2.70	2.71	2.71	2.71	2.71	2.71	2.71	2.71	2.71	2.74	2.74	2.74	2.74

Manufacturer reserves the right to change, at any time, specifications and designs without notice and without obligations.

COOLING PERFORMANCE - 24K (Sheet 2 of 4)

AIRFLOW (CFM)	OUTDOOR DB (F)	ID WB (F)	60.8				64.4				66.2				71.6			
		ID DB (F)	73.4	77.0	80.6	84.2	73.4	77.0	80.6	84.2	73.4	77.0	80.6	84.2	73.4	77.0	80.6	84.2
695	-22	TC	26007	26216	26529	26843	27226	27226	27226	27535	27885	27885	27885	27885	29456	29456	29456	29456
		S/T	0.74	0.84	0.97	1.00	0.58	0.68	0.77	0.87	0.50	0.60	0.69	0.79	0.32	0.42	0.50	0.60
		PI	1.78	1.79	1.79	1.78	1.79	1.79	1.79	1.79	1.80	1.80	1.80	1.80	1.81	1.81	1.81	1.81
	-10	TC	25815	26022	26333	26644	27072	27072	27072	27379	27746	27746	27746	27746	29367	29367	29367	29367
		S/T	0.75	0.84	0.97	1.00	0.58	0.68	0.78	0.87	0.51	0.60	0.70	0.79	0.33	0.42	0.51	0.60
		PI	1.61	1.62	1.62	1.61	1.62	1.62	1.62	1.62	1.62	1.62	1.62	1.62	1.63	1.63	1.63	1.63
	0	TC	25655	25861	26170	26479	26943	26943	26943	27249	27630	27630	27630	27630	29293	29293	29293	29293
		S/T	0.75	0.85	0.98	1.00	0.59	0.68	0.78	0.88	0.51	0.61	0.70	0.80	0.33	0.42	0.51	0.61
		PI	1.54	1.54	1.54	1.54	1.54	1.54	1.54	1.54	1.54	1.54	1.54	1.54	1.54	1.54	1.54	1.54
	5	TC	25580	25785	26093	26402	26894	26894	26894	27199	27588	27588	27588	27588	29273	29273	29273	29273
		S/T	0.75	0.85	0.98	1.00	0.59	0.69	0.78	0.88	0.51	0.61	0.70	0.80	0.33	0.42	0.51	0.61
		PI	1.45	1.45	1.45	1.45	1.44	1.44	1.44	1.44	1.44	1.44	1.44	1.44	1.44	1.44	1.44	1.44
	14	TC	25428	25632	25939	26245	26743	26743	26743	27046	27450	27450	27450	27450	29174	29174	29174	29174
		S/T	0.76	0.85	0.99	1.00	0.59	0.69	0.79	0.88	0.51	0.61	0.71	0.81	0.33	0.43	0.51	0.61
		PI	1.44	1.44	1.44	1.44	1.44	1.44	1.44	1.44	1.44	1.44	1.44	1.44	1.44	1.44	1.44	1.44
	23	TC	25277	25480	25784	26089	26642	26642	26642	26945	27349	27349	27349	27349	29099	29099	29099	29099
		S/T	0.76	0.86	0.99	1.00	0.59	0.69	0.79	0.89	0.52	0.61	0.71	0.81	0.33	0.43	0.52	0.61
		PI	1.44	1.44	1.44	1.44	1.43	1.43	1.43	1.43	1.44	1.44	1.44	1.44	1.44	1.44	1.44	1.44
	32	TC	25150	25352	25655	25958	26541	26541	26541	26843	27274	27274	27274	27274	29075	29075	29075	29075
		S/T	0.76	0.86	1.00	1.00	0.60	0.70	0.79	0.89	0.52	0.62	0.72	0.81	0.33	0.43	0.52	0.62
		PI	1.44	1.44	1.44	1.44	1.44	1.44	1.44	1.44	1.44	1.44	1.44	1.44	1.44	1.44	1.44	1.44
	41	TC	25024	25225	25526	25828	26440	26440	26440	26741	27186	27186	27186	27186	29050	29050	29050	29050
		S/T	0.77	0.87	1.00	1.00	0.60	0.70	0.80	0.90	0.52	0.62	0.72	0.82	0.33	0.43	0.52	0.62
		PI	1.46	1.46	1.46	1.46	1.45	1.45	1.45	1.45	1.46	1.46	1.46	1.46	1.46	1.46	1.46	1.46
	50	TC	24872	25072	25372	25671	26314	26314	26314	26614	27073	27073	27073	27073	28976	28976	28976	28976
		S/T	0.77	0.87	1.00	1.00	0.60	0.70	0.80	0.90	0.52	0.62	0.72	0.82	0.34	0.44	0.52	0.62
		PI	1.48	1.48	1.48	1.48	1.47	1.47	1.47	1.47	1.48	1.48	1.48	1.48	1.47	1.47	1.47	1.47
	59	TC	24670	24868	25165	25462	26138	26138	26138	26435	26909	26909	26909	26909	28852	28852	28852	28852
		S/T	0.78	0.88	0.99	1.00	0.61	0.71	0.81	0.91	0.53	0.63	0.73	0.83	0.34	0.44	0.53	0.63
		PI	1.52	1.52	1.52	1.52	1.51	1.51	1.51	1.51	1.51	1.51	1.51	1.51	1.51	1.51	1.51	1.51
	68	TC	24392	24588	24882	25176	25861	25861	25861	26155	26645	26645	26645	26645	28604	28604	28604	28604
		S/T	0.78	0.88	0.99	1.00	0.61	0.71	0.81	0.91	0.53	0.63	0.73	0.83	0.34	0.44	0.53	0.63
		PI	1.57	1.57	1.57	1.57	1.56	1.56	1.56	1.56	1.56	1.56	1.56	1.56	1.55	1.55	1.55	1.55
	77	TC	23314	23510	23706	23902	24784	24784	24784	25078	25469	25469	25469	25469	27429	27429	27429	27429
		S/T	0.79	0.90	1.00	1.00	0.61	0.72	0.83	0.93	0.53	0.64	0.74	0.85	0.34	0.44	0.54	0.64
		PI	1.73	1.73	1.73	1.73	1.73	1.73	1.73	1.73	1.73	1.73	1.73	1.73	1.73	1.73	1.73	1.73
	86	TC	22237	22433	22629	22824	23608	23608	23608	23804	24294	24294	24294	24294	26253	26253	26253	26253
		S/T	0.80	0.92	1.00	1.00	0.62	0.73	0.85	0.96	0.53	0.65	0.76	0.87	0.34	0.44	0.54	0.65
		PI	1.89	1.89	1.89	1.89	1.89	1.89	1.89	1.89	1.89	1.89	1.89	1.89	1.90	1.90	1.90	1.90
	95	TC	21061	21257	21453	21649	22433	22433	22433	22629	23118	23118	23510	23706	24980	24980	24980	24980
		S/T	0.82	0.94	1.00	1.00	0.63	0.75	0.87	0.99	0.54	0.66	0.77	0.88	0.34	0.44	0.55	0.66
		PI	2.07	2.07	2.07	2.07	2.07	2.07	2.07	2.07	2.08	2.08	2.08	2.08	2.08	2.08	2.08	2.08
	104	TC	19892	20088	20285	20481	21177	21177	21266	21462	21863	21863	22077	22274	23638	23638	23638	23638
		S/T	0.85	0.99	1.00	1.00	0.65	0.78	0.90	1.00	0.55	0.68	0.80	0.93	0.33	0.45	0.57	0.69
		PI	2.28	2.28	2.28	2.28	2.29	2.29	2.29	2.29	2.29	2.29	2.29	2.29	2.30	2.30	2.30	2.30
	115	TC	18447	18643	18839	19036	19624	19624	19821	20017	20311	20311	20311	20508	21979	21979	21979	21979
		S/T	0.87	1.00	1.00	1.00	0.65	0.79	0.93	1.00	0.55	0.69	0.82	0.95	0.33	0.45	0.57	0.70
		PI	2.53	2.53	2.53	2.53	2.55	2.55	2.55	2.55	2.55	2.55	2.55	2.55	2.57	2.57	2.57	2.57
	122	TC	17269	17466	17662	17858	18447	18447	18643	18839	19134	19134	19134	19330	20704	20704	20704	20704
		S/T	0.90	1.00	1.00	1.00	0.67	0.81	0.96	1.00	0.56	0.70	0.85	0.98	0.33	0.46	0.59	0.91
		PI	2.75	2.75	2.75	2.75	2.76	2.76	2.76	2.76	2.77	2.77	2.77	2.77	2.79	2.79	2.79	2.79

Manufacturer reserves the right to change, at any time, specifications and designs without notice and without obligations.

COOLING PERFORMANCE - 24K (Sheet 3 of 4)

AIRFLOW (CFM)	OUTDOOR DB (F)	ID WB (F)	60.8				64.4				66.2				71.6			
		ID DB (F)	73.4	77.0	80.6	84.2	73.4	77.0	80.6	84.2	73.4	77.0	80.6	84.2	73.4	77.0	80.6	84.2
759	-22	TC	26634	26947	27260	27574	27845	27845	27845	28154	28500	28500	28500	28500	30162	30162	30162	30162
		S/T	0.75	0.87	1.00	1.00	0.59	0.69	0.80	0.96	0.50	0.61	0.71	0.82	0.32	0.42	0.51	0.61
		PI	1.78	1.79	1.79	1.78	1.79	1.79	1.79	1.79	1.80	1.80	1.80	1.80	1.81	1.81	1.81	1.81
	-10	TC	26437	26748	27059	27370	27687	27687	27687	27995	28358	28358	28358	28358	30071	30071	30071	30071
		S/T	0.76	0.87	1.00	1.00	0.59	0.70	0.80	0.97	0.51	0.61	0.72	0.82	0.33	0.42	0.52	0.61
		PI	1.61	1.62	1.62	1.61	1.62	1.62	1.62	1.62	1.62	1.62	1.62	1.62	1.63	1.63	1.63	1.63
	0	TC	26273	26582	26891	27200	27555	27555	27555	27861	28240	28240	28240	28240	29995	29995	29995	29995
		S/T	0.76	0.88	1.00	1.00	0.60	0.70	0.81	0.97	0.51	0.62	0.72	0.83	0.33	0.42	0.52	0.62
		PI	1.57	1.57	1.57	1.57	1.56	1.56	1.56	1.56	1.57	1.57	1.57	1.57	1.57	1.57	1.57	1.57
	5	TC	26196	26504	26813	27121	27505	27505	27505	27810	28197	28197	28197	28197	29974	29974	29974	29974
		S/T	0.76	0.88	1.00	1.00	0.60	0.70	0.81	0.98	0.51	0.62	0.72	0.83	0.33	0.42	0.52	0.62
		PI	1.47	1.47	1.47	1.47	1.47	1.47	1.47	1.47	1.47	1.47	1.47	1.47	1.46	1.46	1.46	1.46
	14	TC	26041	26347	26654	26960	27350	27350	27350	27654	28056	28056	28056	28056	29873	29873	29873	29873
		S/T	0.77	0.88	1.00	1.00	0.60	0.71	0.82	0.98	0.51	0.62	0.73	0.83	0.33	0.43	0.52	0.62
		PI	1.47	1.47	1.47	1.47	1.46	1.46	1.46	1.46	1.47	1.47	1.47	1.47	1.47	1.47	1.47	1.47
	23	TC	25886	26190	26495	26799	27247	27247	27247	27550	27953	27953	27953	27953	29797	29797	29797	29797
		S/T	0.77	0.89	1.00	1.00	0.60	0.71	0.82	0.99	0.52	0.62	0.73	0.84	0.33	0.43	0.53	0.62
		PI	1.46	1.46	1.46	1.46	1.46	1.46	1.46	1.46	1.47	1.47	1.47	1.47	1.47	1.47	1.47	1.47
	32	TC	25756	26059	26362	26665	27144	27144	27144	27446	27876	27876	27876	27876	29772	29772	29772	29772
		S/T	0.77	0.89	1.00	1.00	0.61	0.72	0.82	0.99	0.52	0.63	0.74	0.84	0.33	0.43	0.53	0.63
		PI	1.47	1.47	1.47	1.47	1.47	1.47	1.47	1.47	1.47	1.47	1.47	1.47	1.47	1.47	1.47	1.47
	41	TC	25627	25928	26230	26531	27041	27041	27041	27342	27786	27786	27786	27786	29746	29746	29746	29746
		S/T	0.78	0.90	1.00	1.00	0.61	0.72	0.83	1.00	0.52	0.63	0.74	0.85	0.33	0.43	0.53	0.63
		PI	1.48	1.48	1.48	1.48	1.48	1.48	1.48	1.48	1.48	1.48	1.48	1.48	1.48	1.48	1.48	1.48
	50	TC	25471	25771	26071	26370	26913	26913	26913	27212	27670	27670	27670	27670	29670	29670	29670	29670
		S/T	0.78	0.90	1.00	1.00	0.61	0.72	0.83	1.00	0.52	0.63	0.74	0.85	0.34	0.44	0.53	0.63
		PI	1.51	1.51	1.51	1.51	1.50	1.50	1.50	1.50	1.51	1.51	1.51	1.51	1.50	1.50	1.50	1.50
	59	TC	25264	25562	25859	26156	26732	26732	26732	27029	27503	27503	27503	27503	29543	29543	29543	29543
		S/T	0.79	0.91	1.00	1.00	0.62	0.73	0.84	0.95	0.53	0.64	0.75	0.86	0.34	0.44	0.54	0.64
		PI	1.55	1.55	1.55	1.55	1.54	1.54	1.54	1.54	1.54	1.54	1.54	1.54	1.53	1.53	1.53	1.53
	68	TC	24980	25273	25567	25861	26449	26449	26449	26743	27233	27233	27233	27233	29290	29290	29290	29290
		S/T	0.79	0.91	1.00	1.00	0.62	0.73	0.84	0.95	0.53	0.64	0.75	0.86	0.34	0.44	0.54	0.64
		PI	1.60	1.60	1.60	1.60	1.59	1.59	1.59	1.59	1.59	1.59	1.59	1.59	1.58	1.58	1.58	1.58
	77	TC	23804	24000	24196	24392	25273	25273	25273	25567	26057	26057	26057	26057	28016	28016	28016	28016
		S/T	0.81	0.93	1.00	1.00	0.62	0.74	0.86	0.97	0.54	0.65	0.76	0.88	0.34	0.44	0.55	0.65
		PI	1.76	1.76	1.76	1.76	1.76	1.76	1.76	1.76	1.76	1.76	1.76	1.76	1.76	1.76	1.76	1.76
	86	TC	22629	22824	23020	23216	24098	24098	24098	24294	24882	24882	24882	25176	26743	26743	26743	26743
		S/T	0.83	0.95	1.00	1.00	0.63	0.75	0.88	0.99	0.54	0.66	0.78	0.89	0.34	0.45	0.56	0.67
		PI	1.92	1.92	1.92	1.92	1.93	1.93	1.93	1.93	1.93	1.93	1.93	1.93	1.94	1.94	1.94	1.94
	95	TC	21551	21747	21943	22139	22922	22922	23118	23314	23608	23608	24000	24196	25469	25469	25469	25469
		S/T	0.84	0.98	1.00	1.00	0.64	0.77	0.89	1.00	0.55	0.67	0.79	0.91	0.33	0.45	0.56	0.68
		PI	2.10	2.10	2.10	2.10	2.11	2.11	2.11	2.11	2.12	2.12	2.12	2.12	2.13	2.13	2.13	2.13
	104	TC	20338	20534	20731	20927	21667	21667	21863	22060	22309	22309	22523	22720	24129	24129	24129	24129
		S/T	0.88	1.00	1.00	1.00	0.66	0.80	0.94	1.00	0.56	0.70	0.83	0.96	0.33	0.45	0.58	0.90
		PI	2.32	2.32	2.32	2.32	2.33	2.33	2.33	2.33	2.34	2.34	2.34	2.34	2.35	2.35	2.35	2.35
	115	TC	18839	19036	19232	19428	20115	20115	20311	20508	20704	20704	20704	20900	22470	22470	22470	22470
		S/T	0.90	1.00	1.00	1.00	0.67	0.82	0.96	1.00	0.56	0.71	0.85	0.99	0.32	0.46	0.59	0.92
		PI	2.58	2.58	2.58	2.58	2.59	2.59	2.59	2.59	2.60	2.60	2.60	2.60	2.62	2.62	2.62	2.62
	122	TC	17662	17858	18054	18251	18839	18839	19036	19232	19526	19526	19526	19723	21096	21096	21096	21096
		S/T	0.93	1.00	1.00	1.00	0.68	0.84	0.99	1.00	0.57	0.72	0.88	1.00	0.32	0.46	0.60	0.97
		PI	2.80	2.80	2.80	2.80	2.81	2.81	2.81	2.81	2.82	2.82	2.82	2.82	2.84	2.84	2.84	2.84

Manufacturer reserves the right to change, at any time, specifications and designs without notice and without obligations.

COOLING PERFORMANCE - 24K (Sheet 4 of 4)

AIRFLOW (CFM)	OUTDOOR DB (F)	ID WB (F)	60.8				64.4				66.2				71.6			
		ID DB (F)	73.4	77.0	80.6	84.2	73.4	77.0	80.6	84.2	73.4	77.0	80.6	84.2	73.4	77.0	80.6	84.2
824	-22	TC	27275	27699	28012	28325	28478	28478	28478	28787	29129	29129	29129	29129	30885	30885	30885	30885
		S/T	0.76	0.89	1.00	1.00	0.60	0.71	0.83	1.00	0.50	0.62	0.73	0.85	0.32	0.42	0.52	0.62
		PI	1.50	1.50	1.50	1.50	1.49	1.49	1.49	1.49	1.49	1.49	1.49	1.49	1.48	1.48	1.48	1.48
	-10	TC	27074	27494	27805	28116	28316	28316	28316	28624	28984	28984	28984	28984	30792	30792	30792	30792
		S/T	0.77	0.90	1.00	1.00	0.60	0.72	0.83	1.00	0.51	0.62	0.74	0.85	0.33	0.42	0.53	0.62
		PI	1.50	1.50	1.50	1.50	1.49	1.49	1.49	1.49	1.49	1.49	1.49	1.49	1.49	1.49	1.49	1.49
	0	TC	26906	27323	27632	27941	28181	28181	28181	28488	28862	28862	28862	28862	30714	30714	30714	30714
		S/T	0.77	0.91	1.00	1.00	0.61	0.72	0.84	1.00	0.51	0.63	0.74	0.86	0.33	0.42	0.53	0.63
		PI	1.50	1.50	1.50	1.50	1.49	1.49	1.49	1.49	1.49	1.49	1.49	1.49	1.49	1.49	1.49	1.49
	5	TC	26827	27244	27552	27859	28130	28130	28130	28435	28819	28819	28819	28819	30693	30693	30693	30693
		S/T	0.77	0.91	1.00	1.00	0.61	0.72	0.84	1.00	0.51	0.63	0.74	0.86	0.33	0.42	0.53	0.63
		PI	1.50	1.50	1.50	1.50	1.49	1.49	1.49	1.49	1.50	1.50	1.50	1.50	1.49	1.49	1.49	1.49
	14	TC	26668	27082	27388	27694	27972	27972	27972	28276	28674	28674	28674	28674	30589	30589	30589	30589
		S/T	0.78	0.91	1.00	1.00	0.61	0.73	0.85	1.00	0.51	0.63	0.75	0.86	0.33	0.43	0.53	0.63
		PI	1.49	1.49	1.49	1.49	1.49	1.49	1.49	1.49	1.49	1.49	1.49	1.49	1.49	1.49	1.49	1.49
	23	TC	26509	26921	27225	27529	27867	27867	27867	28169	28569	28569	28569	28569	30511	30511	30511	30511
		S/T	0.78	0.92	1.00	1.00	0.61	0.73	0.85	1.00	0.52	0.63	0.75	0.87	0.33	0.43	0.54	0.63
		PI	1.49	1.49	1.49	1.49	1.49	1.49	1.49	1.49	1.49	1.49	1.49	1.49	1.49	1.49	1.49	1.49
	32	TC	26377	26786	27089	27391	27761	27761	27761	28063	28490	28490	28490	28490	30485	30485	30485	30485
		S/T	0.78	0.92	1.00	1.00	0.62	0.74	0.85	1.00	0.52	0.64	0.76	0.87	0.33	0.43	0.54	0.64
		PI	1.50	1.50	1.50	1.50	1.49	1.49	1.49	1.49	1.50	1.50	1.50	1.50	1.50	1.50	1.50	1.50
	41	TC	26244	26651	26953	27254	27656	27656	27656	27956	28398	28398	28398	28398	30459	30459	30459	30459
		S/T	0.79	0.93	0.99	0.99	0.62	0.74	0.86	1.00	0.52	0.64	0.76	0.88	0.33	0.43	0.54	0.64
		PI	1.51	1.51	1.51	1.51	1.51	1.51	1.51	1.51	1.51	1.51	1.51	1.51	1.51	1.51	1.51	1.51
	50	TC	26085	26490	26789	27089	27524	27524	27524	27823	28280	28280	28280	28280	30381	30381	30381	30381
		S/T	0.79	0.93	1.00	1.00	0.62	0.74	0.86	1.00	0.52	0.64	0.76	0.88	0.34	0.44	0.54	0.64
		PI	1.54	1.54	1.54	1.54	1.53	1.53	1.53	1.53	1.53	1.53	1.53	1.53	1.53	1.53	1.53	1.53
	59	TC	25873	26274	26571	26868	27340	27340	27340	27637	28109	28109	28109	28109	30252	30252	30252	30252
		S/T	0.80	0.94	1.00	1.00	0.63	0.75	0.87	0.99	0.53	0.65	0.77	0.89	0.34	0.44	0.55	0.65
		PI	1.57	1.57	1.57	1.57	1.57	1.57	1.57	1.57	1.57	1.57	1.57	1.57	1.56	1.56	1.56	1.56
	68	TC	25582	25978	26272	26566	27050	27050	27050	27344	27833	27833	27833	27833	29992	29992	29992	29992
		S/T	0.80	0.94	1.00	1.00	0.63	0.75	0.87	0.99	0.53	0.65	0.77	0.89	0.34	0.44	0.55	0.65
		PI	1.63	1.63	1.63	1.63	1.62	1.62	1.62	1.62	1.62	1.62	1.62	1.62	1.61	1.61	1.61	1.61
	77	TC	24304	24500	24696	24892	25773	25773	25773	26067	26658	26658	26658	26658	28617	28617	28617	28617
		S/T	0.83	0.96	1.00	1.00	0.63	0.76	0.89	1.00	0.55	0.66	0.78	0.91	0.34	0.44	0.56	0.66
		PI	1.79	1.79	1.79	1.79	1.79	1.79	1.79	1.79	1.79	1.79	1.79	1.79	1.79	1.79	1.79	1.79
	86	TC	23027	23223	23419	23615	24598	24598	24598	24794	25484	25484	25484	26089	27242	27242	27242	27242
		S/T	0.86	0.98	1.00	1.00	0.64	0.77	0.91	1.00	0.55	0.67	0.80	0.91	0.34	0.46	0.58	0.69
		PI	1.95	1.95	1.95	1.95	1.97	1.97	1.97	1.97	1.97	1.97	1.97	1.97	1.98	1.98	1.98	1.98
	95	TC	22052	22248	22444	22640	23423	23423	23825	24021	24108	24108	24500	24696	25969	25969	25969	25969
		S/T	0.86	1.00	1.00	1.00	0.65	0.79	0.91	1.00	0.56	0.68	0.81	0.94	0.32	0.46	0.57	0.70
		PI	2.13	2.13	2.13	2.13	2.15	2.15	2.15	2.15	2.16	2.16	2.16	2.16	2.18	2.18	2.18	2.18
	104	TC	20794	20990	21186	21382	22169	22169	22478	22674	22764	22764	22978	23175	24630	24630	24630	24630
		S/T	0.91	1.00	1.00	1.00	0.67	0.82	0.98	1.00	0.57	0.72	0.86	0.99	0.33	0.45	0.59	1.00
		PI	2.36	2.36	2.36	2.36	2.37	2.37	2.37	2.37	2.38	2.38	2.38	2.38	2.40	2.40	2.40	2.40
	115	TC	19240	19436	19633	19829	20618	20618	20814	21010	21104	21104	21104	21300	22972	22972	22972	22972
		S/T	0.93	1.00	1.00	1.00	0.69	0.85	0.99	1.00	0.57	0.73	0.88	1.00	0.31	0.47	0.61	1.00
		PI	2.63	2.63	2.63	2.63	2.63	2.63	2.63	2.63	2.65	2.65	2.65	2.65	2.67	2.67	2.67	2.67
	122	TC	18063	18260	18456	18652	19240	19240	19436	19633	19927	19927	19927	20123	21496	21496	21496	21496
		S/T	0.95	1.00	1.00	1.00	0.69	0.87	1.00	1.00	0.58	0.74	0.91	1.00	0.31	0.46	0.61	1.00
		PI	2.85	2.85	2.85	2.85	2.86	2.86	2.86	2.86	2.87	2.87	2.87	2.87	2.89	2.89	2.89	2.89

LEGEND

TC - Total Cooling Capacity (BTU/hr)
S/T - Sensible Cooling Capacity Ratio
PI - Power Input (kW)

Gray shaded area is Extrapolated Data

HEATING PERFORMANCE AT INDOOR DRY BULB TEMPERATURE - 24K (Sheet 1 of 2)

AIRFLOW (CFM)	OUTDOOR DB (F)	TC: TOTAL CAPACITY IN BTU/HR				PI?TOTAL POWER IN KILOWATTS			
		Indoor Conditions (DB F)				Indoor Conditions (DB F)			
		60.8	68.0	71.6	75.2	60.8	68.0	71.6	75.2
630	-22.0	14472	14342	14277	14147	1.60	1.66	1.64	1.65
	-10.0	16652	16502	16427	16277	1.88	1.94	1.92	1.93
	0.0	18469	18302	18219	18053	2.11	2.18	2.16	2.16
	5.0	19440	19265	19178	19002	2.23	2.31	2.29	2.29
	14.0	20758	20571	20478	20291	2.38	2.47	2.44	2.45
	17.0	21747	21551	21453	21257	2.53	2.62	2.59	2.60
	22.0	21946	21749	21650	21452	2.48	2.51	2.53	2.55
	27.0	22045	21847	21749	21551	2.39	2.42	2.43	2.45
	32.0	21946	21650	21551	21452	2.29	2.32	2.33	2.35
	37.0	22638	22342	22144	22045	2.22	2.25	2.26	2.27
	42.0	24022	23726	23528	23330	2.16	2.17	2.18	2.19
	44.6	25524	25209	24814	24715	2.13	2.11	2.16	2.16
	52.0	26297	25901	25703	25605	2.01	2.02	2.03	2.03
	57.0	26890	26494	26297	26198	1.93	1.93	1.94	1.94
	62.0	27582	27186	26989	26791	1.85	1.85	1.85	1.85
	64.4	27878	27483	27285	26989	1.81	1.81	1.81	1.81
695	-22.0	14764	14633	14568	14503	1.62	1.68	1.65	1.67
	-10.0	16988	16837	16762	16687	1.90	1.97	1.94	1.95
	0.0	18841	18674	18591	18507	2.13	2.20	2.17	2.19
	5.0	19832	19656	19569	19481	2.26	2.34	2.30	2.32
	14.0	21177	20989	20895	20802	2.41	2.49	2.46	2.47
	17.0	22185	21989	21890	21792	2.56	2.65	2.61	2.63
	22.0	22342	22144	22045	21946	2.51	2.54	2.56	2.57
	27.0	22539	22243	22144	22045	2.41	2.44	2.46	2.47
	32.0	22342	22144	21946	21847	2.32	2.34	2.36	2.37
	37.0	23034	22737	22638	22441	2.25	2.27	2.28	2.29
	42.0	24418	24121	24022	23825	2.17	2.19	2.20	2.21
	44.6	26019	25703	25308	25209	2.15	2.13	2.18	2.18
	52.0	26791	26395	26198	26099	2.03	2.04	2.04	2.05
	57.0	27483	27087	26890	26692	1.94	1.95	1.96	1.96
	62.0	28076	27681	27483	27285	1.86	1.86	1.87	1.87
	64.4	28373	27977	27779	27582	1.82	1.82	1.82	1.82

Manufacturer reserves the right to change, at any time, specifications and designs without notice and without obligations.

HEATING PERFORMANCE AT INDOOR DRY BULB TEMPERATURE - 24K (Sheet 2 of 2)

AIRFLOW (CFM)	OUTDOOR DB (F)	TC: TOTAL CAPACITY IN BTU/HR				PI?TOTAL POWER IN KILOWATTS			
		Indoor Conditions (DB F)				Indoor Conditions (DB F)			
		60.8	68.0	71.6	75.2	60.8	68.0	71.6	75.2
759	-22.0	14933	14803	14737	14607	1.64	1.70	1.67	1.68
	-10.0	17182	17032	16957	16807	1.92	1.99	1.96	1.97
	0.0	19056	18890	18807	18640	2.16	2.23	2.20	2.21
	5.0	20059	19884	19796	19621	2.29	2.36	2.33	2.35
	14.0	21419	21232	21138	20951	2.44	2.52	2.48	2.50
	17.0	22439	22243	22145	21949	2.59	2.68	2.64	2.66
	22.0	22638	22441	22342	22144	2.54	2.57	2.59	2.60
	27.0	22737	22539	22441	22243	2.44	2.47	2.49	2.50
	32.0	22638	22342	22243	22144	2.34	2.37	2.38	2.40
	37.0	23330	23034	22836	22737	2.27	2.29	2.30	2.31
	42.0	24714	24418	24220	24121	2.20	2.21	2.22	2.23
	44.6	26316	26000	25605	25506	2.17	2.15	2.20	2.20
	52.0	27087	26692	26593	26395	2.05	2.06	2.06	2.07
	57.0	27779	27384	27186	26989	1.96	1.97	1.97	1.97
	62.0	28373	27977	27779	27582	1.88	1.88	1.88	1.88
	64.4	28768	28274	28076	27878	1.84	1.84	1.84	1.84
824	-22.0	15104	14974	14909	14712	1.66	1.72	1.69	1.70
	-10.0	17379	17229	17154	16928	1.94	2.01	1.98	2.00
	0.0	19274	19108	19025	18774	2.18	2.26	2.22	2.24
	5.0	20288	20114	20026	19762	2.31	2.39	2.36	2.37
	14.0	21664	21477	21384	21102	2.47	2.55	2.51	2.53
	17.0	22696	22500	22402	22107	2.62	2.71	2.67	2.69
	22.0	22939	22741	22642	22343	2.57	2.60	2.62	2.63
	27.0	22937	22840	22741	22442	2.47	2.50	2.52	2.53
	32.0	22939	22541	22543	22445	2.36	2.40	2.40	2.43
	37.0	23631	23334	23035	23038	2.29	2.31	2.32	2.33
	42.0	25014	24718	24419	24421	2.23	2.23	2.24	2.25
	44.6	26616	26300	25905	25806	2.19	2.17	2.22	2.22
	52.0	27387	26992	26995	26695	2.07	2.08	2.08	2.09
	57.0	28079	27684	27486	27288	1.98	1.99	1.98	1.98
	62.0	28672	28277	28079	27882	1.90	1.90	1.89	1.89
	64.4	29169	28573	28376	28178	1.86	1.86	1.86	1.86

Gray shaded area is Extrapolated Data

COOLING PERFORMANCE - 24K HH (Sheet 1 of 3)

AIRFLOW (CFM)	OUTDOOR DB (F)	ID WB (F)	60.8				64.4				66.2				71.6			
		ID (DB F)	73.4	77.0	80.6	84.2	73.4	77.0	80.6	84.2	73.4	77.0	80.6	84.2	73.4	77.0	80.6	84.2
630	-22	TC	25495	25474	25683	25891	26699	27226	27226	27535	27361	27361	27361	27361	28838	28838	28838	28838
		S/T	0.72	0.82	0.91	0.95	0.57	0.66	0.75	0.84	0.49	0.58	0.68	0.76	0.33	0.42	0.49	0.58
		PI	1.61	1.60	1.60	1.61	1.61	1.61	1.61	1.61	1.62	1.62	1.62	1.62	1.63	1.63	1.63	1.63
	-10	TC	25306	25286	25493	25700	26547	27072	27072	27379	27224	27224	27224	27224	28751	28751	28751	28751
		S/T	0.73	0.82	0.92	0.96	0.57	0.66	0.76	0.84	0.50	0.58	0.68	0.77	0.34	0.42	0.50	0.58
		PI	1.45	1.45	1.45	1.45	1.46	1.46	1.46	1.46	1.46	1.46	1.46	1.46	1.47	1.47	1.47	1.47
	0	TC	25149	25129	25335	25541	26421	26943	26943	27249	27110	27110	27110	27110	28678	28678	28678	28678
		S/T	0.73	0.83	0.92	0.96	0.58	0.67	0.76	0.85	0.50	0.59	0.68	0.77	0.34	0.42	0.50	0.59
		PI	1.36	1.35	1.35	1.36	1.36	1.36	1.36	1.36	1.36	1.36	1.36	1.36	1.36	1.36	1.36	1.36
	5	TC	25076	25055	25261	25466	26373	26894	26894	27199	27070	27070	27070	27070	28659	28659	28659	28659
		S/T	0.73	0.83	0.93	0.97	0.58	0.67	0.76	0.85	0.50	0.59	0.69	0.77	0.34	0.42	0.50	0.59
		PI	1.28	1.27	1.27	1.28	1.27	1.27	1.27	1.27	1.27	1.27	1.27	1.27	1.27	1.27	1.27	1.27
	14	TC	24927	24907	25111	25315	26225	26743	26743	27046	26934	26934	26934	26934	28562	28562	28562	28562
		S/T	0.74	0.83	0.93	0.97	0.58	0.67	0.77	0.85	0.50	0.59	0.69	0.78	0.34	0.43	0.50	0.59
		PI	1.27	1.27	1.27	1.27	1.27	1.27	1.27	1.27	1.27	1.27	1.27	1.27	1.27	1.27	1.27	1.27
	23	TC	24778	24758	24961	25164	26126	26642	26642	26945	26835	26835	26835	26835	28489	28489	28489	28489
		S/T	0.74	0.84	0.94	0.98	0.59	0.67	0.77	0.86	0.51	0.59	0.69	0.78	0.34	0.43	0.51	0.59
		PI	1.27	1.26	1.26	1.27	1.27	1.27	1.27	1.27	1.27	1.27	1.27	1.27	1.27	1.27	1.27	1.27
	32	TC	24655	24634	24836	25038	26027	26541	26541	26843	26761	26761	26761	26761	28465	28465	28465	28465
		S/T	0.74	0.84	0.94	0.98	0.59	0.68	0.77	0.86	0.51	0.60	0.70	0.78	0.34	0.43	0.51	0.60
		PI	1.27	1.27	1.27	1.27	1.27	1.27	1.27	1.27	1.28	1.28	1.28	1.28	1.28	1.28	1.28	1.28
	41	TC	24531	24511	24712	24912	25928	26440	26440	26741	26675	26675	26675	26675	28441	28441	28441	28441
		S/T	0.75	0.85	0.95	0.99	0.59	0.68	0.78	0.87	0.51	0.60	0.70	0.79	0.34	0.43	0.51	0.60
		PI	1.29	1.28	1.28	1.29	1.29	1.29	1.29	1.29	1.29	1.29	1.29	1.29	1.29	1.29	1.29	1.29
	50	TC	24382	24362	24562	24761	25805	26314	26314	26614	26563	26563	26563	26563	28368	28368	28368	28368
		S/T	0.75	0.85	0.95	0.99	0.59	0.69	0.78	0.87	0.51	0.60	0.70	0.79	0.35	0.44	0.51	0.60
		PI	1.31	1.30	1.30	1.31	1.30	1.30	1.30	1.30	1.31	1.31	1.31	1.31	1.30	1.30	1.30	1.30
	59	TC	24184	24164	24362	24560	25632	26138	26138	26435	26403	26403	26403	26403	28247	28247	28247	28247
		S/T	0.76	0.86	0.96	1.00	0.60	0.69	0.79	0.88	0.52	0.61	0.71	0.80	0.35	0.44	0.52	0.61
		PI	1.34	1.33	1.33	1.34	1.34	1.34	1.34	1.34	1.34	1.34	1.34	1.34	1.33	1.33	1.33	1.33
	68	TC	23911	23892	24088	24283	25360	25360	25360	25654	26144	26144	26144	26144	28004	28004	28004	28004
		S/T	0.76	0.86	0.96	1.00	0.60	0.69	0.79	0.88	0.52	0.61	0.71	0.80	0.35	0.44	0.52	0.61
		PI	1.39	1.38	1.38	1.39	1.38	1.38	1.38	1.38	1.38	1.38	1.38	1.38	1.37	1.37	1.37	1.37
	77	TC	22815	22815	23010	23206	24185	24185	24185	24381	24969	24969	24969	24969	26829	26829	26829	26829
		S/T	0.77	0.87	0.98	1.00	0.60	0.70	0.80	0.90	0.52	0.62	0.72	0.82	0.35	0.44	0.53	0.62
		PI	1.53	1.53	1.53	1.53	1.53	1.53	1.53	1.53	1.53	1.53	1.53	1.53	1.53	1.53	1.53	1.53
	86	TC	21738	21933	22129	22325	23108	23108	23108	23304	23794	23794	23794	23794	25654	25654	25654	25654
		S/T	0.78	0.89	1.00	1.00	0.61	0.71	0.82	0.92	0.53	0.63	0.73	0.84	0.34	0.44	0.53	0.63
		PI	1.67	1.67	1.67	1.67	1.67	1.67	1.67	1.67	1.67	1.67	1.67	1.67	1.68	1.68	1.68	1.68
	95	TC	20660	20856	21052	21248	21933	21933	21933	22129	22619	22619	23010	22619	24479	24479	24479	24479
		S/T	0.80	0.91	1.00	1.00	0.62	0.73	0.84	0.95	0.53	0.64	0.74	0.86	0.34	0.44	0.54	0.64
		PI	1.83	1.83	1.83	1.83	1.83	1.83	1.83	1.83	1.84	1.84	1.84	1.84	1.85	1.85	1.85	1.85
	104	TC	19492	19689	19885	20081	20723	20723	20812	21008	21410	21410	21624	21499	23139	23139	23139	23139
		S/T	0.83	0.95	1.00	1.00	0.63	0.75	0.88	0.99	0.54	0.66	0.78	0.89	0.34	0.45	0.55	0.66
		PI	2.02	2.02	2.02	2.02	2.02	2.02	2.02	2.02	2.03	2.03	2.03	2.03	2.05	2.05	2.05	2.05
	115	TC	18048	18244	18440	18636	19225	19225	19421	19617	19911	19911	19911	20108	21481	21481	21481	21481
		S/T	0.84	0.97	1.00	1.00	0.64	0.77	0.89	1.00	0.55	0.67	0.79	0.91	0.33	0.45	0.56	0.68
		PI	2.24	2.24	2.24	2.24	2.25	2.25	2.25	2.25	2.26	2.26	2.26	2.26	2.28	2.28	2.28	2.28
	122	TC	16871	17067	17263	17459	18048	18048	18244	18440	18734	18734	18734	18931	20304	20304	20304	20304
		S/T	0.87	1.00	1.00	1.00	0.65	0.79	0.92	1.00	0.55	0.68	0.81	0.94	0.33	0.45	0.57	0.69
		PI	2.43	2.43	2.43	2.43	2.44	2.44	2.44	2.44	2.45	2.45	2.45	2.45	2.47	2.47	2.47	2.47

Manufacturer reserves the right to change, at any time, specifications and designs without notice and without obligations.

COOLING PERFORMANCE - 24K HH (Sheet 2 of 3)

AIRFLOW (CFM)	OUTDOOR DB (F)	ID WB (F)	60.8				64.4				66.2				71.6			
		ID (DB F)	73.4	77.0	80.6	84.2	73.4	77.0	80.6	84.2	73.4	77.0	80.6	84.2	73.4	77.0	80.6	84.2
695	-22	TC	26007	26216	26529	26843	27226	27226	27226	27535	27885	27885	27885	27885	29456	29456	29456	29456
		S/T	0.74	0.84	0.97	1.00	0.58	0.68	0.77	0.87	0.50	0.60	0.69	0.79	0.32	0.42	0.50	0.60
		PI	1.61	1.60	1.60	1.61	1.61	1.61	1.61	1.61	1.62	1.62	1.62	1.62	1.63	1.63	1.63	1.63
	-10	TC	25815	26022	26333	26644	27072	27072	27072	27379	27746	27746	27746	27746	29367	29367	29367	29367
		S/T	0.75	0.84	0.97	1.00	0.58	0.68	0.78	0.87	0.51	0.60	0.70	0.79	0.33	0.42	0.51	0.60
		PI	1.45	1.45	1.45	1.45	1.46	1.46	1.46	1.46	1.46	1.46	1.46	1.46	1.47	1.47	1.47	1.47
	0	TC	25655	25861	26170	26479	26943	26943	26943	27249	27630	27630	27630	27630	29293	29293	29293	29293
		S/T	0.75	0.85	0.98	1.00	0.59	0.68	0.78	0.88	0.51	0.61	0.70	0.80	0.33	0.42	0.51	0.61
		PI	1.39	1.39	1.39	1.39	1.39	1.39	1.39	1.39	1.39	1.39	1.39	1.39	1.39	1.39	1.39	1.39
	5	TC	25580	25785	26093	26402	26894	26894	26894	27199	27588	27588	27588	27588	29273	29273	29273	29273
		S/T	0.75	0.85	0.98	1.00	0.59	0.69	0.78	0.88	0.51	0.61	0.70	0.80	0.33	0.42	0.51	0.61
		PI	1.31	1.31	1.31	1.31	1.30	1.30	1.30	1.30	1.30	1.30	1.30	1.30	1.30	1.30	1.30	1.30
	14	TC	25428	25632	25939	26245	26743	26743	26743	27046	27450	27450	27450	27450	29174	29174	29174	29174
		S/T	0.76	0.85	0.99	1.00	0.59	0.69	0.79	0.88	0.51	0.61	0.71	0.81	0.33	0.43	0.51	0.61
		PI	1.30	1.30	1.30	1.30	1.30	1.30	1.30	1.30	1.30	1.30	1.30	1.30	1.30	1.30	1.30	1.30
	23	TC	25277	25480	25784	26089	26642	26642	26642	26945	27349	27349	27349	27349	29099	29099	29099	29099
		S/T	0.76	0.86	0.99	1.00	0.59	0.69	0.79	0.89	0.52	0.61	0.71	0.81	0.33	0.43	0.52	0.61
		PI	1.30	1.30	1.30	1.30	1.30	1.30	1.30	1.30	1.30	1.30	1.30	1.30	1.30	1.30	1.30	1.30
	32	TC	25150	25352	25655	25958	26541	26541	26541	26843	27274	27274	27274	27274	29075	29075	29075	29075
		S/T	0.76	0.86	1.00	1.00	0.60	0.70	0.79	0.89	0.52	0.62	0.72	0.81	0.33	0.43	0.52	0.62
		PI	1.31	1.31	1.31	1.31	1.30	1.30	1.30	1.30	1.31	1.31	1.31	1.31	1.31	1.31	1.31	1.31
	41	TC	25024	25225	25526	25828	26440	26440	26440	26741	27186	27186	27186	27186	29050	29050	29050	29050
		S/T	0.77	0.87	1.00	1.00	0.60	0.70	0.80	0.90	0.52	0.62	0.72	0.82	0.33	0.43	0.52	0.62
		PI	1.32	1.32	1.32	1.32	1.31	1.31	1.31	1.31	1.32	1.32	1.32	1.32	1.31	1.31	1.31	1.31
	50	TC	24872	25072	25372	25671	26314	26314	26314	26614	27073	27073	27073	27073	28976	28976	28976	28976
		S/T	0.77	0.87	1.00	1.00	0.60	0.70	0.80	0.90	0.52	0.62	0.72	0.82	0.34	0.44	0.52	0.62
		PI	1.34	1.34	1.34	1.34	1.33	1.33	1.33	1.33	1.34	1.34	1.34	1.34	1.33	1.33	1.33	1.33
	59	TC	24670	24868	25165	25462	26138	26138	26138	26435	26909	26909	26909	26909	28852	28852	28852	28852
		S/T	0.78	0.88	0.99	1.00	0.61	0.71	0.81	0.91	0.53	0.63	0.73	0.83	0.34	0.44	0.53	0.63
		PI	1.37	1.37	1.37	1.37	1.36	1.36	1.36	1.36	1.37	1.37	1.37	1.37	1.36	1.36	1.36	1.36
	68	TC	24392	24588	24882	25176	25861	25861	25861	26155	26645	26645	26645	26645	28604	28604	28604	28604
		S/T	0.78	0.88	0.99	1.00	0.61	0.71	0.81	0.91	0.53	0.63	0.73	0.83	0.34	0.44	0.53	0.63
		PI	1.42	1.42	1.42	1.42	1.41	1.41	1.41	1.41	1.41	1.41	1.41	1.41	1.40	1.40	1.40	1.40
	77	TC	23314	23510	23706	23902	24784	24784	24784	25078	25469	25469	25469	25469	27429	27429	27429	27429
		S/T	0.79	0.90	1.00	1.00	0.61	0.72	0.83	0.93	0.53	0.64	0.74	0.85	0.34	0.44	0.54	0.64
		PI	1.56	1.56	1.56	1.56	1.56	1.56	1.56	1.56	1.56	1.56	1.56	1.56	1.56	1.56	1.56	1.56
	86	TC	22237	22433	22629	22824	23608	23608	23608	23804	24294	24294	24294	24294	26253	26253	26253	26253
		S/T	0.80	0.92	1.00	1.00	0.62	0.73	0.85	0.96	0.53	0.65	0.76	0.87	0.34	0.44	0.54	0.65
		PI	1.70	1.70	1.70	1.70	1.71	1.71	1.71	1.71	1.71	1.71	1.71	1.71	1.72	1.72	1.72	1.72
	95	TC	21061	21257	21453	21649	22433	22433	22433	22629	23118	23118	23510	23706	24980	24980	24980	24980
		S/T	0.82	0.94	1.00	1.00	0.63	0.75	0.87	0.99	0.54	0.66	0.77	0.88	0.34	0.44	0.55	0.66
		PI	1.87	1.87	1.87	1.87	1.87	1.87	1.87	1.87	1.88	1.88	1.88	1.88	1.88	1.88	1.88	1.88
	104	TC	19892	20088	20285	20481	21177	21177	21266	21462	21863	21863	22077	22274	23638	23638	23638	23638
		S/T	0.85	0.99	1.00	1.00	0.65	0.78	0.90	1.00	0.55	0.68	0.80	0.93	0.33	0.45	0.57	0.69
		PI	2.06	2.06	2.06	2.06	2.07	2.07	2.07	2.07	2.08	2.08	2.08	2.08	2.08	2.08	2.08	2.08
	115	TC	18447	18643	18839	19036	19624	19624	19821	20017	20311	20311	20311	20508	21979	21979	21979	21979
		S/T	0.87	1.00	1.00	1.00	0.65	0.79	0.93	1.00	0.55	0.69	0.82	0.95	0.33	0.45	0.57	0.70
		PI	2.29	2.29	2.29	2.29	2.30	2.30	2.30	2.30	2.31	2.31	2.31	2.31	2.33	2.33	2.33	2.33
	122	TC	17269	17466	17662	17858	18447	18447	18643	18839	19134	19134	19134	19330	20704	20704	20704	20704
		S/T	0.90	1.00	1.00	1.00	0.67	0.81	0.96	1.00	0.56	0.70	0.85	0.98	0.33	0.46	0.59	0.91
		PI	2.48	2.48	2.48	2.48	2.49	2.49	2.49	2.49	2.50	2.50	2.50	2.50	2.52	2.52	2.52	2.52

Manufacturer reserves the right to change, at any time, specifications and designs without notice and without obligations.

COOLING PERFORMANCE - 24K HH (Sheet 3 of 3)

AIRFLOW (CFM)	OUTDOOR DB (F)	ID WB (F)	60.8				64.4				66.2				71.6			
		ID (DB F)	73.4	77.0	80.6	84.2	73.4	77.0	80.6	84.2	73.4	77.0	80.6	84.2	73.4	77.0	80.6	84.2
759	-22	TC	26634	26947	27260	27574	27845	27845	27845	28154	28500	28500	28500	28500	30162	30162	30162	30162
		S/T	0.75	0.87	1.00	1.00	0.59	0.69	0.80	0.96	0.50	0.61	0.71	0.82	0.32	0.42	0.51	0.61
		PI	1.61	1.60	1.60	1.61	1.61	1.61	1.61	1.61	1.62	1.62	1.62	1.62	1.63	1.63	1.63	1.63
	-10	TC	26437	26748	27059	27370	27687	27687	27687	27995	28358	28358	28358	28358	30071	30071	30071	30071
		S/T	0.76	0.87	1.00	1.00	0.59	0.70	0.80	0.97	0.51	0.61	0.72	0.82	0.33	0.42	0.52	0.61
		PI	1.45	1.45	1.45	1.45	1.46	1.46	1.46	1.46	1.46	1.46	1.46	1.46	1.47	1.47	1.47	1.47
	0	TC	26273	26582	26891	27200	27555	27555	27555	27861	28240	28240	28240	28240	29995	29995	29995	29995
		S/T	0.76	0.88	1.00	1.00	0.60	0.70	0.81	0.97	0.51	0.62	0.72	0.83	0.33	0.42	0.52	0.62
		PI	1.57	1.57	1.57	1.57	1.56	1.56	1.56	1.56	1.57	1.57	1.57	1.57	1.57	1.57	1.57	1.57
	5	TC	26196	26504	26813	27121	27505	27505	27505	27810	28197	28197	28197	28197	29974	29974	29974	29974
		S/T	0.76	0.88	1.00	1.00	0.60	0.70	0.81	0.98	0.51	0.62	0.72	0.83	0.33	0.42	0.52	0.62
		PI	1.47	1.47	1.47	1.47	1.47	1.47	1.47	1.47	1.47	1.47	1.47	1.47	1.46	1.46	1.46	1.46
	14	TC	26041	26347	26654	26960	27350	27350	27350	27654	28056	28056	28056	28056	29873	29873	29873	29873
		S/T	0.77	0.88	1.00	1.00	0.60	0.71	0.82	0.98	0.51	0.62	0.73	0.83	0.33	0.43	0.52	0.62
		PI	1.47	1.47	1.47	1.47	1.46	1.46	1.46	1.46	1.47	1.47	1.47	1.47	1.47	1.47	1.47	1.47
	23	TC	25886	26190	26495	26799	27247	27247	27247	27550	27953	27953	27953	27953	29797	29797	29797	29797
		S/T	0.77	0.89	1.00	1.00	0.60	0.71	0.82	0.99	0.52	0.62	0.73	0.84	0.33	0.43	0.53	0.62
		PI	1.46	1.46	1.46	1.46	1.46	1.46	1.46	1.46	1.47	1.47	1.47	1.47	1.47	1.47	1.47	1.47
	32	TC	25756	26059	26362	26665	27144	27144	27144	27446	27876	27876	27876	27876	29772	29772	29772	29772
		S/T	0.77	0.89	1.00	1.00	0.61	0.72	0.82	0.99	0.52	0.63	0.74	0.84	0.33	0.43	0.53	0.63
		PI	1.47	1.47	1.47	1.47	1.47	1.47	1.47	1.47	1.47	1.47	1.47	1.47	1.47	1.47	1.47	1.47
	41	TC	25627	25928	26230	26531	27041	27041	27041	27342	27786	27786	27786	27786	29746	29746	29746	29746
		S/T	0.78	0.90	1.00	1.00	0.61	0.72	0.83	1.00	0.52	0.63	0.74	0.85	0.33	0.43	0.53	0.63
		PI	1.48	1.48	1.48	1.48	1.48	1.48	1.48	1.48	1.48	1.48	1.48	1.48	1.48	1.48	1.48	1.48
	50	TC	25471	25771	26071	26370	26913	26913	26913	27212	27670	27670	27670	27670	29670	29670	29670	29670
		S/T	0.78	0.90	1.00	1.00	0.61	0.72	0.83	1.00	0.52	0.63	0.74	0.85	0.34	0.44	0.53	0.63
		PI	1.51	1.51	1.51	1.51	1.50	1.50	1.50	1.50	1.51	1.51	1.51	1.51	1.50	1.50	1.50	1.50
	59	TC	25264	25562	25859	26156	26732	26732	26732	27029	27503	27503	27503	27503	29543	29543	29543	29543
		S/T	0.79	0.91	1.00	1.00	0.62	0.73	0.84	0.95	0.53	0.64	0.75	0.86	0.34	0.44	0.54	0.64
		PI	1.55	1.55	1.55	1.55	1.54	1.54	1.54	1.54	1.54	1.54	1.54	1.54	1.53	1.53	1.53	1.53
	68	TC	24980	25273	25567	25861	26449	26449	26449	26743	27233	27233	27233	27233	29290	29290	29290	29290
		S/T	0.79	0.91	1.00	1.00	0.62	0.73	0.84	0.95	0.53	0.64	0.75	0.86	0.34	0.44	0.54	0.64
		PI	1.60	1.60	1.60	1.60	1.59	1.59	1.59	1.59	1.59	1.59	1.59	1.59	1.58	1.58	1.58	1.58
	77	TC	23804	24000	24196	24392	25273	25273	25273	25567	26057	26057	26057	26057	28016	28016	28016	28016
		S/T	0.81	0.93	1.00	1.00	0.62	0.74	0.86	0.97	0.54	0.65	0.76	0.88	0.34	0.44	0.55	0.65
		PI	1.76	1.76	1.76	1.76	1.76	1.76	1.76	1.76	1.76	1.76	1.76	1.76	1.76	1.76	1.76	1.76
	86	TC	22629	22824	23020	23216	24098	24098	24098	24294	24882	24882	24882	25176	26743	26743	26743	26743
		S/T	0.83	0.95	1.00	1.00	0.63	0.75	0.88	0.99	0.54	0.66	0.78	0.89	0.34	0.45	0.56	0.67
		PI	1.92	1.92	1.92	1.92	1.93	1.93	1.93	1.93	1.93	1.93	1.93	1.93	1.94	1.94	1.94	1.94
	95	TC	21551	21747	21943	22139	22922	22922	23118	23314	23608	23608	24000	24196	25469	25469	25469	25469
		S/T	0.84	0.98	1.00	1.00	0.64	0.77	0.89	1.00	0.55	0.67	0.79	0.91	0.33	0.45	0.56	0.68
		PI	2.10	2.10	2.10	2.10	2.11	2.11	2.11	2.11	2.12	2.12	2.12	2.12	2.13	2.13	2.13	2.13
	104	TC	20338	20534	20731	20927	21667	21667	21863	22060	22309	22309	22523	22720	24129	24129	24129	24129
		S/T	0.88	1.00	1.00	1.00	0.66	0.80	0.94	1.00	0.56	0.70	0.83	0.96	0.33	0.45	0.58	0.90
		PI	2.32	2.32	2.32	2.32	2.33	2.33	2.33	2.33	2.34	2.34	2.34	2.34	2.35	2.35	2.35	2.35
	115	TC	18839	19036	19232	19428	20115	20115	20311	20508	20704	20704	20704	20900	22470	22470	22470	22470
		S/T	0.90	1.00	1.00	1.00	0.67	0.82	0.96	1.00	0.56	0.71	0.85	0.99	0.32	0.46	0.59	0.92
		PI	2.58	2.58	2.58	2.58	2.59	2.59	2.59	2.59	2.60	2.60	2.60	2.60	2.62	2.62	2.62	2.62
	122	TC	17662	17858	18054	18251	18839	18839	19036	19232	19526	19526	19526	19723	21096	21096	21096	21096
		S/T	0.93	1.00	1.00	1.00	0.68	0.84	0.99	1.00	0.57	0.72	0.88	1.00	0.32	0.46	0.60	0.97
		PI	2.80	2.80	2.80	2.80	2.81	2.81	2.81	2.81	2.82	2.82	2.82	2.82	2.84	2.84	2.84	2.84

Manufacturer reserves the right to change, at any time, specifications and designs without notice and without obligations.

COOLING PERFORMANCE - 24K HH (Sheet 4 of 4)																		
AIRFLOW (CFM)	OUTDOOR DB (F)	ID WB (F)	60.8				64.4				66.2				71.6			
		ID (DB F)	73.4	77.0	80.6	84.2	73.4	77.0	80.6	84.2	73.4	77.0	80.6	84.2	73.4	77.0	80.6	84.2
824	-22	TC	27275	27699	28012	28325	28478	28478	28478	28787	29129	29129	29129	29129	30885	30885	30885	30885
		S/T	0.76	0.89	1.00	1.00	0.60	0.71	0.83	1.00	0.50	0.62	0.73	0.85	0.32	0.42	0.52	0.62
		PI	1.50	1.50	1.50	1.50	1.49	1.49	1.49	1.49	1.49	1.49	1.49	1.49	1.48	1.48	1.48	1.48
	-10	TC	27074	27494	27805	28116	28316	28316	28316	28624	28984	28984	28984	28984	30792	30792	30792	30792
		S/T	0.77	0.90	1.00	1.00	0.60	0.72	0.83	1.00	0.51	0.62	0.74	0.85	0.33	0.42	0.53	0.62
		PI	1.50	1.50	1.50	1.50	1.49	1.49	1.49	1.49	1.49	1.49	1.49	1.49	1.49	1.49	1.49	1.49
	0	TC	26906	27323	27632	27941	28181	28181	28181	28488	28862	28862	28862	28862	30714	30714	30714	30714
		S/T	0.77	0.91	1.00	1.00	0.61	0.72	0.84	1.00	0.51	0.63	0.74	0.86	0.33	0.42	0.53	0.63
		PI	1.50	1.50	1.50	1.50	1.49	1.49	1.49	1.49	1.49	1.49	1.49	1.49	1.49	1.49	1.49	1.49
	5	TC	26827	27244	27552	27859	28130	28130	28130	28435	28819	28819	28819	28819	30693	30693	30693	30693
		S/T	0.77	0.91	1.00	1.00	0.61	0.72	0.84	1.00	0.51	0.63	0.74	0.86	0.33	0.42	0.53	0.63
		PI	1.50	1.50	1.50	1.50	1.49	1.49	1.49	1.49	1.50	1.50	1.50	1.50	1.49	1.49	1.49	1.49
	14	TC	26668	27082	27388	27694	27972	27972	27972	28276	28674	28674	28674	28674	30589	30589	30589	30589
		S/T	0.78	0.91	1.00	1.00	0.61	0.73	0.85	1.00	0.51	0.63	0.75	0.86	0.33	0.43	0.53	0.63
		PI	1.49	1.49	1.49	1.49	1.49	1.49	1.49	1.49	1.49	1.49	1.49	1.49	1.49	1.49	1.49	1.49
	23	TC	26509	26921	27225	27529	27867	27867	27867	28169	28569	28569	28569	28569	30511	30511	30511	30511
		S/T	0.78	0.92	1.00	1.00	0.61	0.73	0.85	1.00	0.52	0.63	0.75	0.87	0.33	0.43	0.54	0.63
		PI	1.49	1.49	1.49	1.49	1.49	1.49	1.49	1.49	1.49	1.49	1.49	1.49	1.49	1.49	1.49	1.49
	32	TC	26377	26786	27089	27391	27761	27761	27761	28063	28490	28490	28490	28490	30485	30485	30485	30485
		S/T	0.78	0.92	1.00	1.00	0.62	0.74	0.85	1.00	0.52	0.64	0.76	0.87	0.33	0.43	0.54	0.64
		PI	1.50	1.50	1.50	1.50	1.49	1.49	1.49	1.49	1.50	1.50	1.50	1.50	1.50	1.50	1.50	1.50
	41	TC	26244	26651	26953	27254	27656	27656	27656	27956	28398	28398	28398	28398	30459	30459	30459	30459
		S/T	0.79	0.93	0.99	0.99	0.62	0.74	0.86	1.00	0.52	0.64	0.76	0.88	0.33	0.43	0.54	0.64
		PI	1.51	1.51	1.51	1.51	1.51	1.51	1.51	1.51	1.51	1.51	1.51	1.51	1.51	1.51	1.51	1.51
	50	TC	26085	26490	26789	27089	27524	27524	27524	27823	28280	28280	28280	28280	30381	30381	30381	30381
		S/T	0.79	0.93	1.00	1.00	0.62	0.74	0.86	1.00	0.52	0.64	0.76	0.88	0.34	0.44	0.54	0.64
		PI	1.54	1.54	1.54	1.54	1.53	1.53	1.53	1.53	1.53	1.53	1.53	1.53	1.53	1.53	1.53	1.53
	59	TC	25873	26274	26571	26868	27340	27340	27340	27637	28109	28109	28109	28109	30252	30252	30252	30252
		S/T	0.80	0.94	1.00	1.00	0.63	0.75	0.87	0.99	0.53	0.65	0.77	0.89	0.34	0.44	0.55	0.65
		PI	1.57	1.57	1.57	1.57	1.57	1.57	1.57	1.57	1.57	1.57	1.57	1.57	1.56	1.56	1.56	1.56
	68	TC	25582	25978	26272	26566	27050	27050	27050	27344	27833	27833	27833	27833	29992	29992	29992	29992
		S/T	0.80	0.94	1.00	1.00	0.63	0.75	0.87	0.99	0.53	0.65	0.77	0.89	0.34	0.44	0.55	0.65
		PI	1.63	1.63	1.63	1.63	1.62	1.62	1.62	1.62	1.62	1.62	1.62	1.62	1.61	1.61	1.61	1.61
	77	TC	24304	24500	24696	24892	25773	25773	25773	26067	26658	26658	26658	26658	28617	28617	28617	28617
		S/T	0.83	0.96	1.00	1.00	0.63	0.76	0.89	1.00	0.55	0.66	0.78	0.91	0.34	0.44	0.56	0.66
		PI	1.79	1.79	1.79	1.79	1.79	1.79	1.79	1.79	1.79	1.79	1.79	1.79	1.79	1.79	1.79	1.79
	86	TC	23027	23223	23419	23615	24598	24598	24598	24794	25484	25484	25484	26089	27242	27242	27242	27242
		S/T	0.86	0.98	1.00	1.00	0.64	0.77	0.91	1.00	0.55	0.67	0.80	0.91	0.34	0.46	0.58	0.69
		PI	1.95	1.95	1.95	1.95	1.97	1.97	1.97	1.97	1.97	1.97	1.97	1.97	1.98	1.98	1.98	1.98
	95	TC	22052	22248	22444	22640	23423	23423	23825	24021	24108	24108	24500	24696	25969	25969	25969	25969
		S/T	0.86	1.00	1.00	1.00	0.65	0.79	0.91	1.00	0.56	0.68	0.81	0.94	0.32	0.46	0.57	0.70
		PI	2.13	2.13	2.13	2.13	2.15	2.15	2.15	2.15	2.16	2.16	2.16	2.16	2.18	2.18	2.18	2.18
	104	TC	20794	20990	21186	21382	22169	22169	22478	22674	22764	22764	22978	23175	24630	24630	24630	24630
		S/T	0.91	1.00	1.00	1.00	0.67	0.82	0.98	1.00	0.57	0.72	0.86	0.99	0.33	0.45	0.59	1.00
		PI	2.36	2.36	2.36	2.36	2.37	2.37	2.37	2.37	2.38	2.38	2.38	2.38	2.40	2.40	2.40	2.40
	115	TC	19240	19436	19633	19829	20618	20618	20814	21010	21104	21104	21104	21300	22972	22972	22972	22972
		S/T	0.93	1.00	1.00	1.00	0.69	0.85	0.99	1.00	0.57	0.73	0.88	1.00	0.31	0.47	0.61	1.00
		PI	2.63	2.63	2.63	2.63	2.63	2.63	2.63	2.63	2.65	2.65	2.65	2.65	2.67	2.67	2.67	2.67
	122	TC	18063	18260	18456	18652	19240	19240	19436	19633	19927	19927	19927	20123	21496	21496	21496	21496
		S/T	0.95	1.00	1.00	1.00	0.69	0.87	1.00	1.00	0.58	0.74	0.91	1.00	0.31	0.46	0.61	1.00
		PI	2.85	2.85	2.85	2.85	2.86	2.86	2.86	2.86	2.87	2.87	2.87	2.87	2.89	2.89	2.89	2.89

LEGEND

TC - Total Cooling Capacity (BTU/hr)
S/T - Sensible Cooling Capacity Ratio
PI - Power Input (kW)

Gray shaded area is Extrapolated Data

HEATING PERFORMANCE AT INDOOR DRY BULB TEMPERATURE - 24K HH (Sheet 1 of 2)

AIRFLOW (CFM)	OUTDOOR (DB F)	TC: TOTAL CAPACITY IN BTU/HR				PI: TOTAL POWER IN KILOWATTS			
		Indoor Conditions (DB F)				Indoor Conditions (DB F)			
		60.8	68.0	71.6	75.2	60.8	68.0	71.6	75.2
630	-22.0	17416	17279	17211	17143	2.19	2.27	2.19	2.19
	-10.0	20039	19882	19803	19724	2.57	2.66	2.57	2.57
	0.0	22225	22050	21963	21876	2.88	2.99	2.88	2.88
	5.0	23394	23210	23119	23027	3.05	3.17	3.05	3.05
	14.0	24980	24784	24686	24588	3.26	3.38	3.26	3.26
	17.0	26169	25964	25861	25759	3.46	3.59	3.46	3.46
	22.0	25270	25072	24973	24874	3.32	3.31	3.31	3.31
	27.0	24379	24180	24081	23982	3.06	3.04	3.03	3.03
	32.0	23288	23090	22991	22793	2.79	2.77	2.76	2.75
	37.0	22892	22595	22496	22397	2.56	2.52	2.50	2.49
	42.0	23189	22892	22694	22595	2.32	2.27	2.25	2.22
	44.6	23608	23306	23405	23306	2.20	2.00	2.12	2.09
	52.0	23306	22909	22810	22612	1.83	1.75	1.72	1.68
	57.0	22909	22512	22314	22116	1.58	1.50	1.46	1.41
	62.0	22413	22116	21917	21719	1.33	1.24	1.19	1.14
	64.4	22215	21818	21620	21521	1.21	1.11	1.06	1.01
695	-22.0	17783	17646	17578	17510	2.21	2.30	2.22	2.22
	-10.0	20461	20304	20226	20147	2.59	2.69	2.60	2.60
	0.0	22693	22519	22432	22345	2.90	3.02	2.91	2.91
	5.0	23887	23704	23612	23521	3.08	3.20	3.09	3.09
	14.0	25506	25311	25213	25115	3.28	3.41	3.29	3.29
	17.0	26721	26516	26414	26311	3.49	3.62	3.50	3.50
	22.0	25865	25667	25568	25469	3.35	3.35	3.35	3.34
	27.0	24973	24676	24577	24478	3.09	3.07	3.06	3.06
	32.0	23784	23586	23388	23288	2.82	2.80	2.78	2.77
	37.0	23388	23090	22991	22793	2.59	2.55	2.53	2.51
	42.0	23685	23388	23189	23090	2.34	2.29	2.27	2.24
	44.6	24104	23802	24000	23802	2.22	2.02	2.14	2.11
	52.0	23802	23405	23306	23107	1.85	1.77	1.73	1.70
	57.0	23306	23008	22810	22612	1.59	1.52	1.47	1.43
	62.0	22909	22512	22314	22116	1.35	1.25	1.20	1.15
	64.4	22711	22314	22116	21917	1.23	1.12	1.07	1.02
759	-22.0	17943	17807	17739	17670	2.24	2.32	2.24	2.24
	-10.0	20646	20489	20410	20332	2.62	2.71	2.62	2.62
	0.0	22898	22724	22637	22549	2.94	3.04	2.94	2.94
	5.0	24102	23919	23827	23736	3.11	3.23	3.11	3.11
	14.0	25736	25541	25443	25345	3.32	3.44	3.32	3.32
	17.0	26962	26757	26654	26552	3.53	3.66	3.53	3.53
	22.0	26063	25865	25766	25667	3.38	3.38	3.38	3.38
	27.0	25171	24973	24775	24676	3.12	3.10	3.09	3.08
	32.0	23982	23784	23586	23487	2.85	2.82	2.81	2.79
	37.0	23586	23288	23189	22991	2.61	2.57	2.55	2.53
	42.0	23883	23586	23388	23288	2.37	2.32	2.29	2.26
	44.6	24303	24000	24198	24000	2.24	2.04	2.16	2.13
	52.0	24000	23603	23504	23306	1.86	1.79	1.75	1.71
	57.0	23504	23207	23008	22810	1.61	1.53	1.49	1.44
	62.0	23107	22711	22512	22314	1.36	1.26	1.21	1.16
	64.4	22909	22512	22314	22116	1.24	1.13	1.08	1.03

Manufacturer reserves the right to change, at any time, specifications and designs without notice and without obligations.

HEATING PERFORMANCE AT INDOOR DRY BULB TEMPERATURE - 24K HH (Sheet 2 of 2)

AIRFLOW (CFM)	OUTDOOR (DB F)	TC: TOTAL CAPACITY IN BTU/HR				PI: TOTAL POWER IN KILOWATTS			
		Indoor Conditions (DB F)				Indoor Conditions (DB F)			
		60.8	68.0	71.6	75.2	60.8	68.0	71.6	75.2
824	-22.0	18105	17969	17900	17832	2.26	2.34	2.25	2.25
	-10.0	20832	20675	20596	20518	2.65	2.74	2.64	2.64
	0.0	23104	22930	22843	22756	2.97	3.07	2.96	2.96
	5.0	24320	24136	24045	23953	3.15	3.26	3.14	3.14
	14.0	25969	25773	25675	25577	3.36	3.47	3.35	3.35
	17.0	27205	27000	26897	26795	3.57	3.69	3.56	3.56
	22.0	26263	26065	25966	25867	3.41	3.41	3.41	3.42
	27.0	25371	25274	24975	24876	3.15	3.13	3.12	3.10
	32.0	24182	23984	23786	23687	2.88	2.84	2.84	2.81
	37.0	23786	23488	23389	23191	2.63	2.59	2.57	2.55
	42.0	24083	23786	23587	23488	2.40	2.35	2.31	2.28
	44.6	24502	24200	24398	24200	2.26	2.06	2.18	2.15
	52.0	24200	23803	23704	23506	1.87	1.81	1.77	1.72
	57.0	23704	23407	23208	23010	1.63	1.54	1.51	1.45
	62.0	23308	22911	22713	22514	1.37	1.27	1.22	1.17
	64.4	23109	22713	22514	22316	1.25	1.14	1.09	1.04

Gray shaded area is Extrapolated Data

COOLING PERFORMANCE - 30K (Sheet 1 of 4)

AIRFLOW (CFM)	OUTDOOR (DB F)	ID (WB F)	60.8				64.4				66.2				71.6			
		ID (DB F)	73.4	77.0	80.6	84.2	73.4	77.0	80.6	84.2	73.4	77.0	80.6	84.2	73.4	77.0	80.6	84.2
712	-22	TC	31921	31974	31974	31974	33428	34164	34164	34164	34153	34153	34153	34153	36129	36129	36129	36129
		S/T	0.65	0.69	0.75	0.81	0.54	0.59	0.65	0.70	0.49	0.54	0.60	0.65	0.38	0.43	0.48	0.52
		PI	2.30	2.30	2.30	2.30	2.31	2.31	2.31	2.31	2.31	2.31	2.31	2.31	2.33	2.33	2.33	2.33
	-10	TC	31686	31738	31738	31738	33238	33970	33970	33970	33983	33983	33983	33983	36020	36020	36020	36020
		S/T	0.65	0.70	0.76	0.81	0.55	0.60	0.65	0.71	0.50	0.55	0.60	0.65	0.38	0.43	0.48	0.53
		PI	2.09	2.08	2.08	2.09	2.09	2.09	2.09	2.09	2.09	2.09	2.09	2.09	2.10	2.10	2.10	2.10
	0	TC	31489	31541	31541	31541	33080	33808	33808	33808	33841	33841	33841	33841	35928	35928	35928	35928
		S/T	0.65	0.70	0.76	0.82	0.55	0.60	0.65	0.71	0.50	0.55	0.61	0.65	0.39	0.43	0.48	0.53
		PI	1.95	1.95	1.95	1.95	1.94	1.94	1.94	1.94	1.95	1.95	1.95	1.95	1.96	1.96	1.96	1.96
	5	TC	31397	31449	31449	31449	33020	33746	33746	33746	33790	33790	33790	33790	35904	35904	35904	35904
		S/T	0.66	0.70	0.76	0.82	0.55	0.60	0.66	0.71	0.50	0.55	0.61	0.66	0.39	0.43	0.48	0.53
		PI	1.83	1.83	1.83	1.83	1.82	1.82	1.82	1.82	1.82	1.82	1.82	1.82	1.82	1.82	1.82	1.82
	14	TC	31211	31262	31262	31262	32834	33557	33557	33557	33620	33620	33620	33620	35783	35783	35783	35783
		S/T	0.66	0.71	0.77	0.82	0.55	0.61	0.66	0.72	0.50	0.55	0.61	0.66	0.39	0.44	0.49	0.53
		PI	1.82	1.82	1.82	1.82	1.82	1.82	1.82	1.82	1.82	1.82	1.82	1.82	1.82	1.82	1.82	1.82
	23	TC	31025	31076	31076	31076	32710	33431	33431	33431	33497	33497	33497	33497	35692	35692	35692	35692
		S/T	0.66	0.71	0.77	0.83	0.56	0.61	0.66	0.72	0.51	0.56	0.61	0.66	0.39	0.44	0.49	0.54
		PI	1.82	1.82	1.82	1.82	1.82	1.82	1.82	1.82	1.82	1.82	1.82	1.82	1.83	1.83	1.83	1.83
	32	TC	30870	30920	30920	30920	32587	33304	33304	33304	33404	33404	33404	33404	35661	35661	35661	35661
		S/T	0.67	0.72	0.77	0.83	0.56	0.61	0.67	0.73	0.51	0.56	0.62	0.67	0.39	0.44	0.49	0.54
		PI	1.83	1.83	1.83	1.83	1.82	1.82	1.82	1.82	1.83	1.83	1.83	1.83	1.83	1.83	1.83	1.83
	41	TC	30715	30765	30765	30765	32463	33178	33178	33178	33297	33297	33297	33297	35631	35631	35631	35631
		S/T	0.67	0.72	0.78	0.84	0.56	0.62	0.67	0.73	0.51	0.56	0.62	0.67	0.39	0.44	0.49	0.54
		PI	1.84	1.84	1.84	1.84	1.84	1.84	1.84	1.84	1.84	1.84	1.84	1.84	1.85	1.85	1.85	1.85
	50	TC	30528	30578	30578	30578	32309	33020	33020	33020	33158	33158	33158	33158	35540	35540	35540	35540
		S/T	0.67	0.72	0.78	0.84	0.56	0.62	0.67	0.73	0.51	0.56	0.62	0.67	0.40	0.45	0.50	0.54
		PI	1.88	1.87	1.87	1.88	1.87	1.87	1.87	1.87	1.87	1.87	1.87	1.87	1.87	1.87	1.87	1.87
	59	TC	30280	30330	30330	30330	32092	32799	32799	32799	32958	32958	32958	32958	35388	35388	35388	35388
		S/T	0.68	0.73	0.79	0.85	0.57	0.62	0.68	0.74	0.52	0.57	0.63	0.68	0.40	0.45	0.50	0.55
		PI	1.92	1.92	1.92	1.92	1.91	1.91	1.91	1.91	1.91	1.91	1.91	1.91	1.91	1.91	1.91	1.91
	68	TC	29939	29988	29988	29988	31752	31752	31752	31752	32634	32634	32634	32634	35084	35084	35084	35084
		S/T	0.68	0.73	0.79	0.85	0.57	0.63	0.68	0.74	0.52	0.57	0.63	0.68	0.40	0.45	0.50	0.55
		PI	1.99	1.99	1.99	1.99	1.98	1.98	1.98	1.98	1.98	1.98	1.98	1.98	1.97	1.97	1.97	1.97
	77	TC	28518	28518	28518	28518	30380	30380	30380	30380	31262	31262	31262	31262	33614	33614	33614	33614
		S/T	0.68	0.74	0.80	0.86	0.57	0.63	0.68	0.74	0.52	0.57	0.63	0.68	0.40	0.45	0.50	0.55
		PI	2.19	2.19	2.19	2.19	2.19	2.19	2.19	2.19	2.19	2.19	2.19	2.19	2.19	2.19	2.19	2.19
	86	TC	27244	27244	27244	27244	28910	28910	28910	28910	29792	29792	29792	29792	32144	32144	32144	32144
		S/T	0.68	0.75	0.81	0.88	0.57	0.63	0.69	0.75	0.51	0.57	0.63	0.69	0.39	0.44	0.50	0.55
		PI	2.40	2.40	2.40	2.40	2.41	2.41	2.41	2.41	2.41	2.41	2.41	2.41	2.42	2.42	2.42	2.42
	95	TC	25872	25872	25872	26166	27538	27538	27538	27538	28420	28420	28812	28420	30576	30576	30576	30576
		S/T	0.69	0.76	0.82	0.89	0.57	0.63	0.70	0.76	0.51	0.57	0.64	0.70	0.38	0.44	0.50	0.56
		PI	2.62	2.62	2.62	2.62	2.63	2.63	2.63	2.63	2.64	2.64	2.64	2.64	2.65	2.65	2.65	2.65
	104	TC	24279	24279	24279	24527	25895	25895	25895	25895	26685	26685	26898	26685	28790	28790	28790	28790
		S/T	0.70	0.77	0.85	0.92	0.57	0.64	0.71	0.78	0.51	0.58	0.65	0.72	0.38	0.44	0.50	0.56
		PI	2.89	2.89	2.89	2.89	2.90	2.90	2.90	2.90	2.91	2.91	2.91	2.91	2.93	2.93	2.93	2.93
	115	TC	22467	22467	22467	22663	24030	24030	24030	24030	24714	24714	24714	24714	26765	26765	26765	26765
		S/T	0.70	0.78	0.86	0.93	0.57	0.65	0.72	0.79	0.51	0.58	0.65	0.73	0.37	0.44	0.50	0.57
		PI	3.21	3.21	3.21	3.21	3.23	3.23	3.23	3.23	3.23	3.23	3.23	3.23	3.26	3.26	3.26	3.26
	122	TC	21100	21100	21100	21295	22565	22565	22565	22565	23249	23249	23249	23249	25202	25202	25202	25202
		S/T	0.71	0.80	0.88	0.96	0.58	0.65	0.73	0.81	0.51	0.59	0.66	0.74	0.37	0.44	0.51	0.58
		PI	3.48	3.48	3.48	3.48	3.50	3.50	3.50	3.50	3.51	3.51	3.51	3.51	3.53	3.53	3.53	3.53

Manufacturer reserves the right to change, at any time, specifications and designs without notice and without obligations.

COOLING PERFORMANCE - 30K (Sheet 2 of 4)

AIRFLOW (CFM)	OUTDOOR (DB F)	ID (WB F)	60.8				64.4				66.2				71.6			
		ID (DB F)	73.4	77.0	80.6	84.2	73.4	77.0	80.6	84.2	73.4	77.0	80.6	84.2	73.4	77.0	80.6	84.2
806	-22	TC	32614	32614	32927	33241	34164	34164	34164	34164	34885	34885	34885	34885	36951	36951	36951	36951
		S/T	0.68	0.76	0.97	1.00	0.55	0.63	0.70	0.78	0.48	0.56	0.64	0.71	0.34	0.42	0.48	0.55
		PI	2.30	2.30	2.30	2.30	2.31	2.31	2.31	2.31	2.31	2.31	2.31	2.31	2.33	2.33	2.33	2.33
	-10	TC	32373	32373	32684	32995	33970	33970	33970	33970	34711	34711	34711	34711	36839	36839	36839	36839
		S/T	0.69	0.77	0.97	1.00	0.56	0.63	0.71	0.79	0.49	0.56	0.64	0.72	0.34	0.42	0.49	0.56
		PI	2.09	2.08	2.08	2.09	2.09	2.09	2.09	2.09	2.09	2.09	2.09	2.09	2.10	2.10	2.10	2.10
	0	TC	32172	32172	32481	32791	33808	33808	33808	33808	34566	34566	34566	34566	36746	36746	36746	36746
		S/T	0.69	0.77	0.98	1.00	0.56	0.64	0.71	0.79	0.49	0.57	0.65	0.72	0.35	0.42	0.49	0.56
		PI	2.00	2.00	2.00	2.00	2.00	2.00	2.00	2.00	1.99	1.99	1.99	1.99	2.01	2.01	2.01	2.01
	5	TC	32078	32078	32386	32695	33746	33746	33746	33746	34514	34514	34514	34514	36721	36721	36721	36721
		S/T	0.70	0.77	0.98	1.00	0.56	0.64	0.71	0.79	0.49	0.57	0.65	0.72	0.35	0.42	0.49	0.56
		PI	1.88	1.88	1.88	1.88	1.87	1.87	1.87	1.87	1.86	1.86	1.86	1.86	1.87	1.87	1.87	1.87
	14	TC	31888	31888	32194	32501	33557	33557	33557	33557	34341	34341	34341	34341	36597	36597	36597	36597
		S/T	0.70	0.78	0.99	1.00	0.56	0.64	0.72	0.80	0.49	0.57	0.65	0.73	0.35	0.43	0.49	0.56
		PI	1.87	1.87	1.87	1.87	1.86	1.86	1.86	1.86	1.86	1.86	1.86	1.86	1.87	1.87	1.87	1.87
	23	TC	31698	31698	32002	32307	33431	33431	33431	33431	34215	34215	34215	34215	36504	36504	36504	36504
		S/T	0.70	0.78	0.99	1.00	0.57	0.64	0.72	0.80	0.50	0.58	0.65	0.73	0.35	0.43	0.50	0.57
		PI	1.86	1.86	1.86	1.86	1.86	1.86	1.86	1.86	1.86	1.86	1.86	1.86	1.87	1.87	1.87	1.87
	32	TC	31539	31539	31842	32146	33304	33304	33304	33304	34120	34120	34120	34120	36473	36473	36473	36473
		S/T	0.71	0.78	1.00	1.00	0.57	0.65	0.73	0.80	0.50	0.58	0.66	0.74	0.35	0.43	0.50	0.57
		PI	1.87	1.87	1.87	1.87	1.87	1.87	1.87	1.87	1.87	1.87	1.87	1.87	1.88	1.88	1.88	1.88
	41	TC	31381	31381	31682	31984	33178	33178	33178	33178	34010	34010	34010	34010	36442	36442	36442	36442
		S/T	0.71	0.79	1.00	1.00	0.57	0.65	0.73	0.81	0.50	0.58	0.66	0.74	0.35	0.43	0.50	0.57
		PI	1.89	1.89	1.89	1.89	1.89	1.89	1.89	1.89	1.88	1.88	1.88	1.88	1.89	1.89	1.89	1.89
	50	TC	31190	31190	31490	31790	33020	33020	33020	33020	33868	33868	33868	33868	36348	36348	36348	36348
		S/T	0.71	0.79	1.00	1.00	0.57	0.65	0.73	0.81	0.50	0.58	0.66	0.74	0.36	0.44	0.50	0.57
		PI	1.92	1.92	1.92	1.92	1.91	1.91	1.91	1.91	1.91	1.91	1.91	1.91	1.92	1.92	1.92	1.92
	59	TC	30937	30937	31234	31532	32799	32799	32799	32799	33664	33664	33664	33664	36193	36193	36193	36193
		S/T	0.72	0.80	0.88	0.96	0.58	0.66	0.74	0.82	0.51	0.59	0.67	0.75	0.36	0.44	0.51	0.58
		PI	1.97	1.97	1.97	1.97	1.96	1.96	1.96	1.96	1.95	1.95	1.95	1.95	1.96	1.96	1.96	1.96
	68	TC	30588	30588	30882	31176	32451	32451	32451	32451	33333	33333	33333	33333	35882	35882	35882	35882
		S/T	0.72	0.80	0.88	0.96	0.58	0.66	0.74	0.82	0.51	0.59	0.67	0.75	0.36	0.44	0.51	0.58
		PI	2.04	2.04	2.04	2.04	2.03	2.03	2.03	2.03	2.02	2.02	2.02	2.02	2.02	2.02	2.02	2.02
	77	TC	29118	29118	29412	29706	30980	30980	30980	30980	31863	31863	31863	31863	34314	34314	34314	34314
		S/T	0.73	0.81	0.90	0.98	0.58	0.66	0.75	0.83	0.51	0.60	0.68	0.76	0.36	0.44	0.51	0.59
		PI	2.24	2.24	2.24	2.24	2.24	2.24	2.24	2.24	2.24	2.24	2.24	2.24	2.24	2.24	2.24	2.24
	86	TC	27745	27745	28039	28333	29510	29510	29510	29510	30392	30392	30392	30392	32843	32843	32843	32843
		S/T	0.73	0.83	0.92	1.00	0.59	0.67	0.76	0.85	0.52	0.60	0.69	0.77	0.36	0.44	0.51	0.59
		PI	2.46	2.46	2.46	2.46	2.46	2.46	2.46	2.46	2.46	2.46	2.46	2.46	2.47	2.47	2.47	2.47
	95	TC	26373	26373	26667	26961	28137	28137	28137	28137	28922	28922	29412	28922	31275	31275	31275	31275
		S/T	0.75	0.84	0.94	1.00	0.59	0.68	0.77	0.87	0.52	0.61	0.69	0.79	0.35	0.44	0.52	0.60
		PI	2.68	2.68	2.68	2.68	2.69	2.69	2.69	2.69	2.70	2.70	2.70	2.70	2.70	2.70	2.70	2.70
	104	TC	24595	24683	24930	25177	26253	26253	26253	26385	27029	27029	27293	27029	29225	29225	29225	29225
		S/T	0.77	0.88	0.98	1.00	0.60	0.70	0.80	0.90	0.52	0.62	0.72	0.82	0.35	0.44	0.53	0.62
		PI	2.96	2.96	2.96	2.96	2.97	2.97	2.97	2.97	2.98	2.98	2.98	2.98	3.00	3.00	3.00	3.00
	115	TC	22796	22990	23184	23378	24348	24348	24348	24639	25124	25124	25124	25124	27161	27161	27161	27161
		S/T	0.78	0.89	1.00	1.00	0.61	0.71	0.82	0.92	0.53	0.63	0.73	0.83	0.35	0.44	0.53	0.63
		PI	3.29	3.29	3.29	3.29	3.31	3.31	3.31	3.31	3.32	3.32	3.32	3.32	3.35	3.35	3.35	3.35
	122	TC	21341	21535	21729	21923	22796	22796	22796	22990	23572	23572	23572	23572	25609	25609	25609	25609
		S/T	0.80	0.92	1.00	1.00	0.62	0.73	0.84	0.95	0.53	0.64	0.75	0.86	0.34	0.44	0.54	0.91
		PI	3.57	3.57	3.57	3.57	3.59	3.59	3.59	3.59	3.60	3.60	3.60	3.60	3.63	3.63	3.63	3.63

Manufacturer reserves the right to change, at any time, specifications and designs without notice and without obligations.

COOLING PERFORMANCE - 30K (Sheet 3 of 4)

AIRFLOW (CFM)	OUTDOOR (DB F)	ID (WB F)	60.8				64.4				66.2				71.6			
		ID (DB F)	73.4	77.0	80.6	84.2	73.4	77.0	80.6	84.2	73.4	77.0	80.6	84.2	73.4	77.0	80.6	84.2
895	-22	TC	33241	33554	33868	34182	34783	34783	34783	35093	35603	35603	35603	35603	37658	37658	37658	37658
		S/T	0.74	0.85	1.00	1.00	0.58	0.68	0.78	0.96	0.50	0.60	0.69	0.79	0.32	0.42	0.50	0.60
		PI	2.30	2.30	2.30	2.30	2.31	2.31	2.31	2.31	2.31	2.31	2.31	2.31	2.33	2.33	2.33	2.33
	-10	TC	32995	33307	33618	33929	34586	34586	34586	34893	35426	35426	35426	35426	37544	37544	37544	37544
		S/T	0.75	0.85	1.00	1.00	0.58	0.68	0.79	0.97	0.51	0.60	0.70	0.79	0.33	0.42	0.51	0.60
		PI	2.09	2.08	2.08	2.09	2.09	2.09	2.09	2.09	2.09	2.09	2.09	2.09	2.10	2.10	2.10	2.10
	0	TC	32791	33100	33409	33719	34421	34421	34421	34728	35277	35277	35277	35277	37449	37449	37449	37449
		S/T	0.75	0.86	1.00	1.00	0.59	0.68	0.79	0.97	0.51	0.61	0.70	0.80	0.33	0.42	0.51	0.61
		PI	2.04	2.04	2.04	2.04	2.03	2.03	2.03	2.03	2.04	2.04	2.04	2.04	2.05	2.05	2.05	2.05
	5	TC	32695	33003	33312	33620	34358	34358	34358	34664	35224	35224	35224	35224	37423	37423	37423	37423
		S/T	0.75	0.86	1.00	1.00	0.59	0.69	0.79	0.98	0.51	0.61	0.70	0.80	0.33	0.42	0.51	0.61
		PI	1.91	1.91	1.91	1.91	1.91	1.91	1.91	1.91	1.91	1.91	1.91	1.91	1.90	1.90	1.90	1.90
	14	TC	32501	32808	33114	33421	34165	34165	34165	34469	35048	35048	35048	35048	37297	37297	37297	37297
		S/T	0.76	0.86	1.00	1.00	0.59	0.69	0.80	0.98	0.51	0.61	0.71	0.81	0.33	0.43	0.51	0.61
		PI	1.90	1.90	1.90	1.90	1.90	1.90	1.90	1.90	1.90	1.90	1.90	1.90	1.91	1.91	1.91	1.91
	23	TC	32307	32612	32917	33222	34037	34037	34037	34340	34919	34919	34919	34919	37202	37202	37202	37202
		S/T	0.76	0.87	1.00	1.00	0.59	0.69	0.80	0.99	0.52	0.61	0.71	0.81	0.33	0.43	0.52	0.61
		PI	1.90	1.90	1.90	1.90	1.90	1.90	1.90	1.90	1.90	1.90	1.90	1.90	1.91	1.91	1.91	1.91
	32	TC	32146	32449	32752	33055	33908	33908	33908	34210	34823	34823	34823	34823	37170	37170	37170	37170
		S/T	0.76	0.87	1.00	1.00	0.60	0.70	0.80	0.99	0.52	0.62	0.72	0.81	0.33	0.43	0.52	0.62
		PI	1.91	1.91	1.91	1.91	1.91	1.91	1.91	1.91	1.91	1.91	1.91	1.91	1.91	1.91	1.91	1.91
	41	TC	31984	32286	32588	32889	33779	33779	33779	34080	34710	34710	34710	34710	37139	37139	37139	37139
		S/T	0.77	0.88	1.00	1.00	0.60	0.70	0.81	1.00	0.52	0.62	0.72	0.82	0.33	0.43	0.52	0.62
		PI	1.92	1.92	1.92	1.92	1.92	1.92	1.92	1.92	1.93	1.93	1.93	1.93	1.93	1.93	1.93	1.93
	50	TC	31790	32090	32390	32690	33618	33618	33618	33918	34566	34566	34566	34566	37044	37044	37044	37044
		S/T	0.77	0.88	1.00	1.00	0.60	0.70	0.81	1.00	0.52	0.62	0.72	0.82	0.34	0.44	0.52	0.62
		PI	1.96	1.96	1.96	1.96	1.95	1.95	1.95	1.95	1.95	1.95	1.95	1.95	1.95	1.95	1.95	1.95
	59	TC	31532	31829	32127	32424	33393	33393	33393	33690	34357	34357	34357	34357	36885	36885	36885	36885
		S/T	0.78	0.89	0.99	1.00	0.61	0.71	0.82	0.92	0.53	0.63	0.73	0.83	0.34	0.44	0.53	0.63
		PI	2.00	2.00	2.00	2.00	2.00	2.00	2.00	2.00	2.00	2.00	2.00	2.00	2.00	2.00	2.00	2.00
	68	TC	31176	31471	31765	32059	33039	33039	33039	33333	34020	34020	34020	34020	36569	36569	36569	36569
		S/T	0.78	0.89	0.99	1.00	0.61	0.71	0.82	0.92	0.53	0.63	0.73	0.83	0.34	0.44	0.53	0.63
		PI	2.07	2.07	2.07	2.07	2.07	2.07	2.07	2.07	2.07	2.07	2.07	2.07	2.06	2.06	2.06	2.06
	77	TC	29706	30000	30294	30588	31569	31569	31569	31863	32549	32549	32549	32549	35000	35000	35000	35000
		S/T	0.79	0.91	1.00	1.00	0.61	0.72	0.83	0.94	0.53	0.64	0.75	0.85	0.34	0.44	0.54	0.64
		PI	2.29	2.29	2.29	2.29	2.29	2.29	2.29	2.29	2.29	2.29	2.29	2.29	2.29	2.29	2.29	2.29
	86	TC	28333	28627	28922	29216	30098	30098	30098	30392	31078	31078	31078	31078	33431	33431	33431	33431
		S/T	0.81	0.92	1.00	1.00	0.62	0.74	0.85	0.96	0.54	0.65	0.76	0.87	0.34	0.44	0.55	0.65
		PI	2.51	2.51	2.51	2.51	2.52	2.52	2.52	2.52	2.52	2.52	2.52	2.52	2.53	2.53	2.53	2.53
	95	TC	26961	27255	27549	27843	28627	28627	28627	28922	29510	29510	30000	30294	31863	31863	31863	31863
		S/T	0.82	0.95	1.00	1.00	0.63	0.75	0.87	0.99	0.54	0.66	0.77	0.88	0.34	0.44	0.55	0.66
		PI	2.74	2.74	2.74	2.74	2.75	2.75	2.75	2.75	2.76	2.76	2.76	2.76	2.77	2.77	2.77	2.77
	104	TC	25089	25336	25583	25829	26738	26738	26870	27161	27567	27567	27831	28122	29807	29807	29807	29807
		S/T	0.86	0.99	1.00	1.00	0.65	0.78	0.91	1.00	0.55	0.68	0.81	0.93	0.33	0.45	0.57	0.90
		PI	3.03	3.03	3.03	3.03	3.04	3.04	3.04	3.04	3.05	3.05	3.05	3.05	3.07	3.07	3.07	3.07
	115	TC	23184	23378	23572	23766	24833	24833	25124	25415	25609	25609	25609	25900	27743	27743	27743	27743
		S/T	0.87	1.00	1.00	1.00	0.66	0.79	0.93	1.00	0.56	0.69	0.83	0.95	0.33	0.45	0.58	0.92
		PI	3.37	3.37	3.37	3.37	3.38	3.38	3.38	3.38	3.39	3.39	3.39	3.39	3.42	3.42	3.42	3.42
	122	TC	21826	22020	22214	22408	23281	23281	23475	23669	24057	24057	24057	24251	26094	26094	26094	26094
		S/T	0.90	1.00	1.00	1.00	0.67	0.82	0.96	1.00	0.56	0.71	0.85	0.99	0.32	0.46	0.59	0.97
		PI	3.64	3.64	3.64	3.64	3.66	3.66	3.66	3.66	3.67	3.67	3.67	3.67	3.70	3.70	3.70	3.70

Manufacturer reserves the right to change, at any time, specifications and designs without notice and without obligations.

COOLING PERFORMANCE - 30K (Sheet 4 of 4)

AIRFLOW (CFM)	OUTDOOR (DB F)	ID (WB F)	60.8				64.4				66.2				71.6			
		ID (DB F)	73.4	77.0	80.6	84.2	73.4	77.0	80.6	84.2	73.4	77.0	80.6	84.2	73.4	77.0	80.6	84.2
988	-22	TC	33880	34522	34836	35149	35413	35413	35413	36047	36336	36336	36336	36336	38378	38378	38378	38378
		S/T	0.80	0.94	1.00	1.00	0.61	0.73	0.86	1.00	0.52	0.64	0.76	0.87	0.31	0.42	0.52	0.65
		PI	1.95	1.95	1.95	1.95	1.94	1.94	1.94	1.94	1.95	1.95	1.95	1.95	1.93	1.93	1.93	1.93
	-10	TC	33630	34267	34578	34889	35212	35212	35212	35842	36155	36155	36155	36155	38262	38262	38262	38262
		S/T	0.81	0.95	1.00	1.00	0.61	0.73	0.87	1.00	0.53	0.64	0.76	0.88	0.31	0.42	0.53	0.66
		PI	1.95	1.95	1.95	1.95	1.94	1.94	1.94	1.94	1.95	1.95	1.95	1.95	1.93	1.93	1.93	1.93
	0	TC	33421	34055	34364	34673	35045	35045	35045	35672	36004	36004	36004	36004	38165	38165	38165	38165
		S/T	0.81	0.95	1.00	1.00	0.62	0.74	0.87	1.00	0.53	0.65	0.77	0.88	0.31	0.42	0.53	0.66
		PI	1.95	1.95	1.95	1.95	1.94	1.94	1.94	1.94	1.95	1.95	1.95	1.95	1.94	1.94	1.94	1.94
	5	TC	33324	33955	34264	34572	34981	34981	34981	35607	35949	35949	35949	35949	38139	38139	38139	38139
		S/T	0.82	0.96	1.00	1.00	0.62	0.74	0.88	1.00	0.53	0.65	0.77	0.89	0.31	0.42	0.53	0.66
		PI	1.95	1.95	1.95	1.95	1.94	1.94	1.94	1.94	1.95	1.95	1.95	1.95	1.94	1.94	1.94	1.94
	14	TC	33126	33754	34060	34367	34784	34784	34784	35407	35769	35769	35769	35769	38010	38010	38010	38010
		S/T	0.82	0.96	1.00	1.00	0.62	0.74	0.88	1.00	0.53	0.65	0.77	0.89	0.31	0.43	0.53	0.66
		PI	1.94	1.94	1.94	1.94	1.94	1.94	1.94	1.94	1.95	1.95	1.95	1.95	1.94	1.94	1.94	1.94
	23	TC	32929	33553	33857	34162	34653	34653	34653	35273	35638	35638	35638	35638	37913	37913	37913	37913
		S/T	0.82	0.97	1.00	1.00	0.63	0.74	0.89	1.00	0.54	0.66	0.78	0.90	0.31	0.43	0.54	0.67
		PI	1.94	1.94	1.94	1.94	1.93	1.93	1.93	1.93	1.95	1.95	1.95	1.95	1.94	1.94	1.94	1.94
	32	TC	32764	33385	33688	33991	34522	34522	34522	35140	35540	35540	35540	35540	37881	37881	37881	37881
		S/T	0.83	0.97	1.00	1.00	0.63	0.75	0.89	1.00	0.54	0.66	0.78	0.90	0.31	0.43	0.54	0.67
		PI	1.94	1.94	1.94	1.94	1.94	1.94	1.94	1.94	1.96	1.96	1.96	1.96	1.95	1.95	1.95	1.95
	41	TC	32599	33217	33519	33820	34391	34391	34391	35006	35425	35425	35425	35425	37849	37849	37849	37849
		S/T	0.83	0.98	0.99	0.99	0.63	0.75	0.90	1.00	0.54	0.66	0.78	0.90	0.32	0.43	0.54	0.67
		PI	1.96	1.96	1.96	1.96	1.96	1.96	1.96	1.96	1.97	1.97	1.97	1.97	1.97	1.97	1.97	1.97
	50	TC	32402	33016	33316	33615	34228	34228	34228	34840	35277	35277	35277	35277	37752	37752	37752	37752
		S/T	0.84	0.98	1.00	1.00	0.64	0.76	0.90	1.00	0.55	0.67	0.79	0.91	0.32	0.44	0.55	0.68
		PI	2.00	2.00	2.00	2.00	1.99	1.99	1.99	1.99	2.00	2.00	2.00	2.00	1.99	1.99	1.99	1.99
	59	TC	32138	32747	33045	33342	33998	33998	33998	34606	35064	35064	35064	35064	37591	37591	37591	37591
		S/T	0.84	0.99	1.00	1.00	0.64	0.76	0.90	1.00	0.55	0.67	0.79	0.91	0.32	0.44	0.55	0.68
		PI	2.04	2.04	2.04	2.04	2.04	2.04	2.04	2.04	2.05	2.05	2.05	2.05	2.03	2.03	2.03	2.03
	68	TC	31776	32378	32672	32966	33638	33638	33638	34240	34720	34720	34720	34720	37268	37268	37268	37268
		S/T	0.85	0.99	1.00	1.00	0.64	0.76	0.91	1.00	0.55	0.67	0.80	0.92	0.32	0.44	0.55	0.68
		PI	2.11	2.11	2.11	2.11	2.11	2.11	2.11	2.11	2.12	2.12	2.12	2.12	2.10	2.10	2.10	2.10
	77	TC	30306	30909	31203	31497	32168	32168	32168	32770	33250	33250	33250	33250	35700	35700	35700	35700
		S/T	0.85	1.00	1.00	1.00	0.64	0.79	0.92	1.00	0.55	0.68	0.83	0.95	0.32	0.44	0.57	0.69
		PI	2.34	2.34	2.34	2.34	2.34	2.34	2.34	2.34	2.34	2.34	2.34	2.34	2.34	2.34	2.34	2.34
	86	TC	28934	29538	29832	30126	30698	30698	30698	31301	31780	31780	31780	31780	34030	34030	34030	34030
		S/T	0.90	1.00	1.00	1.00	0.65	0.82	0.95	1.00	0.56	0.70	0.84	0.98	0.32	0.44	0.59	0.72
		PI	2.56	2.56	2.56	2.56	2.58	2.58	2.58	2.58	2.58	2.58	2.58	2.58	2.59	2.59	2.59	2.59
	95	TC	27562	28167	28461	28754	29126	29126	29126	29728	30110	30110	30600	31732	32462	32462	32462	32462
		S/T	0.90	1.00	1.00	1.00	0.67	0.83	0.98	1.00	0.56	0.71	0.86	0.98	0.33	0.44	0.58	0.73
		PI	2.80	2.80	2.80	2.80	2.81	2.81	2.81	2.81	2.82	2.82	2.82	2.82	2.84	2.84	2.84	2.84
	104	TC	25592	26005	26252	26499	27232	27232	27502	27960	28115	28115	28380	29260	30400	30400	30400	30400
		S/T	0.96	1.00	1.00	1.00	0.70	0.87	1.00	1.00	0.58	0.75	0.91	1.00	0.31	0.46	0.61	1.00
		PI	3.10	3.10	3.10	3.10	3.10	3.10	3.10	3.10	3.11	3.11	3.11	3.11	3.14	3.14	3.14	3.14
	115	TC	23579	23772	23966	24160	25328	25328	25925	26215	26103	26103	26103	26700	28338	28338	28338	28338
		S/T	0.97	1.00	1.00	1.00	0.71	0.88	1.00	1.00	0.59	0.76	0.94	1.00	0.31	0.46	0.63	1.00
		PI	3.45	3.45	3.45	3.45	3.45	3.45	3.45	3.45	3.46	3.46	3.46	3.46	3.49	3.49	3.49	3.49
	122	TC	22322	22516	22710	22904	23776	23776	24174	24368	24552	24552	24552	24950	26588	26588	26588	26588
		S/T	1.00	1.00	1.00	1.00	0.72	0.92	1.00	1.00	0.59	0.79	0.96	1.00	0.30	0.48	0.64	1.00
		PI	3.72	3.72	3.72	3.72	3.74	3.74	3.74	3.74	3.75	3.75	3.75	3.75	3.78	3.78	3.78	3.78

LEGEND

TC - Total Cooling Capacity (BTU/hr)
S/T - Sensible Cooling Capacity Ratio
PI - Power Input (kW)

Gray shaded area is Extrapolated Data

Manufacturer reserves the right to change, at any time, specifications and designs without notice and without obligations.

HEATING PERFORMANCE AT INDOOR DRY BULB TEMPERATURE- 30K (Sheet 1 of 2)

AIRFLOW (CFM)	OUTDOOR (DB F)	TC: TOTAL CAPACITY IN BTU/HR				PI: TOTAL POWER IN KILOWATTS			
		Indoor Conditions (DB F)				Indoor Conditions (DB F)			
		60.8	68.0	71.6	75.2	60.8	68.0	71.6	75.2
712	-22.0	13555	13368	13305	13243	1.70	1.75	1.76	1.78
	-10.0	15596	15381	15309	15237	1.99	2.05	2.07	2.09
	0.0	17298	17059	16979	16899	2.24	2.30	2.32	2.34
	5.0	18208	17956	17872	17788	2.37	2.44	2.46	2.48
	14.0	19442	19173	19084	18994	2.53	2.60	2.62	2.65
	17.0	20368	20086	19993	19899	2.69	2.76	2.78	2.81
	22.0	21472	21175	21076	20977	2.67	2.73	2.77	2.80
	27.0	22560	22263	22164	21966	2.66	2.72	2.76	2.79
	32.0	23352	23055	22956	22758	2.66	2.71	2.75	2.78
	37.0	25034	24737	24539	24440	2.67	2.73	2.77	2.80
	42.0	27705	27310	27112	26914	2.69	2.75	2.79	2.82
	44.6	30545	30109	29217	29019	2.70	2.79	2.80	2.84
	52.0	32288	31891	31693	31495	2.71	2.78	2.81	2.85
	57.0	34070	33575	33377	33080	2.71	2.78	2.82	2.85
	62.0	35754	35259	34962	34764	2.72	2.79	2.82	2.86
	64.4	36546	36051	35754	35556	2.72	2.79	2.82	2.86
806	-22.0	13742	13618	13494	13431	1.71	1.77	1.78	1.80
	-10.0	15812	15669	15526	15454	2.01	2.07	2.08	2.11
	0.0	17537	17378	17219	17140	2.25	2.32	2.33	2.37
	5.0	18459	18292	18125	18042	2.39	2.46	2.47	2.51
	14.0	19711	19532	19354	19265	2.55	2.62	2.64	2.68
	17.0	20649	20463	20276	20182	2.71	2.79	2.80	2.84
	22.0	21868	21670	21472	21373	2.70	2.76	2.79	2.83
	27.0	23055	22758	22560	22461	2.69	2.75	2.78	2.82
	32.0	23846	23550	23352	23154	2.68	2.74	2.77	2.81
	37.0	25529	25232	25034	24836	2.70	2.76	2.79	2.83
	42.0	28200	27804	27705	27508	2.71	2.78	2.82	2.85
	44.6	31140	30703	29812	29613	2.73	2.82	2.83	2.87
	52.0	32981	32486	32288	32089	2.74	2.81	2.84	2.88
	57.0	34665	34268	33971	33773	2.74	2.81	2.85	2.88
	62.0	36447	35952	35655	35457	2.75	2.82	2.85	2.89
	64.4	37240	36744	36546	36249	2.75	2.82	2.86	2.89

Manufacturer reserves the right to change, at any time, specifications and designs without notice and without obligations.

HEATING PERFORMANCE AT INDOOR DRY BULB TEMPERATURE- 30K (Sheet 2 of 2)

AIRFLOW (CFM)	OUTDOOR (DB F)	TC: TOTAL CAPACITY IN BTU/HR				PI: TOTAL POWER IN KILOWATTS			
		Indoor Conditions (DB F)				Indoor Conditions (DB F)			
		60.8	68.0	71.6	75.2	60.8	68.0	71.6	75.2
895	-22.0	13949	13763	13638	13576	1.73	1.78	1.80	1.81
	-10.0	16050	15835	15692	15621	2.02	2.09	2.10	2.12
	0.0	17801	17563	17404	17324	2.27	2.34	2.36	2.38
	5.0	18738	18487	18319	18236	2.40	2.48	2.50	2.53
	14.0	20008	19740	19561	19472	2.56	2.65	2.67	2.70
	17.0	20961	20680	20493	20399	2.72	2.81	2.83	2.86
	22.0	22164	21868	21670	21571	2.71	2.78	2.82	2.85
	27.0	23253	22956	22758	22659	2.71	2.78	2.81	2.85
	32.0	24044	23748	23550	23451	2.71	2.77	2.80	2.84
	37.0	25825	25430	25331	25133	2.72	2.79	2.82	2.86
	42.0	28497	28101	27903	27705	2.74	2.81	2.84	2.88
	44.6	31437	31000	30109	29911	2.76	2.85	2.86	2.90
	52.0	33278	32882	32585	32387	2.77	2.84	2.87	2.91
	57.0	35061	34565	34367	34070	2.77	2.84	2.88	2.92
	62.0	36744	36249	36051	35754	2.78	2.85	2.89	2.92
	64.4	37636	37141	36843	36645	2.78	2.85	2.89	2.93
988	-22.0	14160	13909	13784	13722	1.74	1.80	1.81	1.83
	-10.0	16292	16004	15860	15789	2.04	2.11	2.13	2.14
	0.0	18070	17750	17590	17511	2.29	2.36	2.38	2.40
	5.0	19020	18683	18516	18432	2.42	2.51	2.53	2.54
	14.0	20310	19950	19771	19682	2.58	2.67	2.70	2.71
	17.0	21277	20900	20713	20619	2.74	2.84	2.86	2.88
	22.0	22465	22067	21869	21770	2.73	2.80	2.85	2.87
	27.0	23452	23156	22958	22859	2.74	2.81	2.84	2.88
	32.0	24244	23947	23749	23751	2.74	2.80	2.83	2.87
	37.0	26126	25629	25631	25433	2.75	2.82	2.85	2.89
	42.0	28797	28401	28103	27905	2.77	2.84	2.86	2.91
	44.6	31736	31300	30409	30211	2.79	2.88	2.89	2.93
	52.0	33578	33283	32885	32686	2.80	2.87	2.90	2.94
	57.0	35461	34865	34768	34370	2.80	2.87	2.91	2.96
	62.0	37044	36549	36452	36054	2.81	2.88	2.93	2.95
	64.4	38036	37541	37143	37046	2.81	2.88	2.92	2.97

Gray shaded area is Extrapolated Data

Manufacturer reserves the right to change, at any time, specifications and designs without notice and without obligations.

COOLING PERFORMANCE - 30K HH (Sheet 1 of 4)

AIRFLOW (CFM)	OUTDOOR (DB F)	ID (WB F)	60.8				64.4				66.2				71.6			
		ID (DB F)	73.4	77.0	80.6	84.2	73.4	77.0	80.6	84.2	73.4	77.0	80.6	84.2	73.4	77.0	80.6	84.2
712	-22	TC	31921	31974	32287	32601	33428	34164	34164	34473	34153	34153	34153	34153	36129	36129	36129	36129
		S/T	0.69	0.78	0.87	0.95	0.56	0.64	0.72	0.81	0.49	0.57	0.66	0.73	0.34	0.42	0.48	0.56
		PI	2.29	2.29	2.29	2.29	2.30	2.30	2.30	2.30	2.31	2.31	2.31	2.31	2.32	2.32	2.32	2.32
	-10	TC	31686	31738	32049	32360	33238	33970	33970	34278	33983	33983	33983	33983	36020	36020	36020	36020
		S/T	0.70	0.79	0.87	0.96	0.56	0.64	0.73	0.81	0.50	0.57	0.66	0.74	0.34	0.42	0.49	0.56
		PI	2.07	2.07	2.07	2.07	2.08	2.08	2.08	2.08	2.08	2.08	2.08	2.08	2.09	2.09	2.09	2.09
	0	TC	31489	31541	31850	32159	33080	33808	33808	34115	33841	33841	33841	33841	35928	35928	35928	35928
		S/T	0.70	0.79	0.88	0.96	0.57	0.65	0.73	0.82	0.50	0.58	0.66	0.74	0.35	0.42	0.49	0.57
		PI	1.94	1.94	1.94	1.94	1.93	1.93	1.93	1.93	1.94	1.94	1.94	1.94	1.95	1.95	1.95	1.95
	5	TC	31397	31449	31757	32065	33020	33746	33746	34052	33790	33790	33790	33790	35904	35904	35904	35904
		S/T	0.70	0.79	0.88	0.97	0.57	0.65	0.73	0.82	0.50	0.58	0.67	0.74	0.35	0.42	0.49	0.57
		PI	1.82	1.82	1.82	1.82	1.81	1.81	1.81	1.81	1.81	1.81	1.81	1.81	1.81	1.81	1.81	1.81
	14	TC	31211	31262	31569	31875	32834	33557	33557	33861	33620	33620	33620	33620	35783	35783	35783	35783
		S/T	0.71	0.80	0.88	0.97	0.57	0.65	0.74	0.82	0.50	0.58	0.67	0.75	0.35	0.43	0.49	0.57
		PI	1.81	1.81	1.81	1.81	1.81	1.81	1.81	1.81	1.81	1.81	1.81	1.81	1.81	1.81	1.81	1.81
	23	TC	31025	31076	31380	31685	32710	33431	33431	33734	33497	33497	33497	33497	35692	35692	35692	35692
		S/T	0.71	0.80	0.89	0.98	0.58	0.66	0.74	0.83	0.51	0.59	0.67	0.75	0.35	0.43	0.50	0.58
		PI	1.81	1.81	1.81	1.81	1.80	1.80	1.80	1.80	1.81	1.81	1.81	1.81	1.81	1.81	1.81	1.81
	32	TC	30870	30920	31223	31527	32587	33304	33304	33606	33404	33404	33404	33404	35661	35661	35661	35661
		S/T	0.72	0.80	0.89	0.98	0.58	0.66	0.74	0.83	0.51	0.59	0.68	0.75	0.35	0.43	0.50	0.58
		PI	1.81	1.81	1.81	1.81	1.81	1.81	1.81	1.81	1.82	1.82	1.82	1.82	1.82	1.82	1.82	1.82
	41	TC	30715	30765	31067	31368	32463	33178	33178	33478	33297	33297	33297	33297	35631	35631	35631	35631
		S/T	0.72	0.81	0.90	0.99	0.58	0.66	0.75	0.84	0.51	0.59	0.68	0.76	0.35	0.43	0.50	0.58
		PI	1.83	1.83	1.83	1.83	1.83	1.83	1.83	1.83	1.83	1.83	1.83	1.83	1.83	1.83	1.83	1.83
	50	TC	30528	30578	30878	31178	32309	33020	33020	33319	33158	33158	33158	33158	35540	35540	35540	35540
		S/T	0.72	0.81	0.90	0.99	0.58	0.67	0.75	0.84	0.51	0.59	0.68	0.76	0.36	0.44	0.50	0.58
		PI	1.86	1.86	1.86	1.86	1.85	1.85	1.85	1.85	1.86	1.86	1.86	1.86	1.86	1.86	1.86	1.86
	59	TC	30280	30330	30627	30925	32092	32799	32799	33096	32958	32958	32958	32958	35388	35388	35388	35388
		S/T	0.73	0.82	0.91	1.00	0.59	0.67	0.76	0.85	0.52	0.60	0.69	0.77	0.36	0.44	0.51	0.59
		PI	1.91	1.91	1.91	1.91	1.90	1.90	1.90	1.90	1.90	1.90	1.90	1.90	1.90	1.90	1.90	1.90
	68	TC	29939	29988	30282	30576	31752	31752	31752	31752	32634	32634	32634	32634	35084	35084	35084	35084
		S/T	0.73	0.82	0.91	1.00	0.59	0.67	0.76	0.85	0.52	0.60	0.69	0.77	0.36	0.44	0.51	0.59
		PI	1.97	1.97	1.97	1.97	1.96	1.96	1.96	1.96	1.96	1.96	1.96	1.96	1.95	1.95	1.95	1.95
	77	TC	28518	28518	28812	29106	30380	30380	30380	30380	31262	31262	31262	31262	33614	33614	33614	33614
		S/T	0.74	0.84	0.93	1.00	0.59	0.68	0.77	0.86	0.52	0.61	0.70	0.78	0.35	0.44	0.52	0.60
		PI	2.17	2.17	2.17	2.17	2.17	2.17	2.17	2.17	2.17	2.17	2.17	2.17	2.17	2.17	2.17	2.17
	86	TC	27244	27244	27538	27832	28910	28910	28910	28910	29792	29792	29792	29792	32144	32144	32144	32144
		S/T	0.75	0.86	0.95	1.00	0.60	0.69	0.79	0.88	0.52	0.61	0.71	0.80	0.35	0.44	0.52	0.61
		PI	2.38	2.38	2.38	2.38	2.39	2.39	2.39	2.39	2.39	2.39	2.39	2.39	2.40	2.40	2.40	2.40
	95	TC	25872	25872	26166	26460	27538	27538	27538	27832	28420	28420	28812	28420	30576	30576	30576	30576
		S/T	0.77	0.87	0.98	1.00	0.60	0.70	0.80	0.90	0.52	0.62	0.72	0.82	0.35	0.44	0.53	0.62
		PI	2.60	2.60	2.60	2.60	2.61	2.61	2.61	2.61	2.62	2.62	2.62	2.62	2.63	2.63	2.63	2.63
	104	TC	24001	24089	24334	24580	25598	25598	25598	25844	26380	26380	26590	26380	28460	28460	28460	28460
		S/T	0.79	0.91	1.00	1.00	0.61	0.72	0.83	0.94	0.53	0.64	0.75	0.85	0.34	0.44	0.54	0.64
		PI	2.87	2.87	2.87	2.87	2.88	2.88	2.88	2.88	2.89	2.89	2.89	2.89	2.91	2.91	2.91	2.91
	115	TC	22210	22403	22596	22789	23755	23755	23755	23948	24431	24431	24431	24431	26459	26459	26459	26459
		S/T	0.81	0.93	1.00	1.00	0.62	0.74	0.85	0.96	0.54	0.65	0.76	0.87	0.34	0.44	0.55	0.65
		PI	3.19	3.19	3.19	3.19	3.21	3.21	3.21	3.21	3.22	3.22	3.22	3.22	3.24	3.24	3.24	3.24
	122	TC	20858	21051	21244	21437	22306	22306	22306	22500	22982	22982	22982	23176	24914	24914	24914	24914
		S/T	0.83	0.95	1.00	1.00	0.63	0.75	0.88	0.99	0.54	0.66	0.78	0.89	0.34	0.45	0.55	0.66
		PI	3.46	3.46	3.46	3.46	3.48	3.48	3.48	3.48	3.49	3.49	3.49	3.49	3.52	3.52	3.52	3.52

Manufacturer reserves the right to change, at any time, specifications and designs without notice and without obligations.

COOLING PERFORMANCE - 30K HH (Sheet 2 of 4)

AIRFLOW (CFM)	OUTDOOR (DB F)	ID (WB F)	60.8				64.4				66.2				71.6			
		ID (DB F)	73.4	77.0	80.6	84.2	73.4	77.0	80.6	84.2	73.4	77.0	80.6	84.2	73.4	77.0	80.6	84.2
806	-22	TC	32614	32614	32927	33241	34164	34164	34164	34473	34885	34885	34885	34885	36951	36951	36951	36951
		S/T	0.72	0.82	0.97	1.00	0.57	0.66	0.75	0.84	0.49	0.59	0.68	0.76	0.33	0.42	0.49	0.58
		PI	2.29	2.29	2.29	2.29	2.30	2.30	2.30	2.30	2.31	2.31	2.31	2.31	2.32	2.32	2.32	2.32
	-10	TC	32373	32373	32684	32995	33970	33970	33970	34278	34711	34711	34711	34711	36839	36839	36839	36839
		S/T	0.73	0.82	0.97	1.00	0.57	0.66	0.76	0.84	0.50	0.59	0.68	0.77	0.34	0.42	0.50	0.58
		PI	2.07	2.07	2.07	2.07	2.08	2.08	2.08	2.08	2.08	2.08	2.08	2.08	2.09	2.09	2.09	2.09
	0	TC	32172	32172	32481	32791	33808	33808	33808	34115	34566	34566	34566	34566	36746	36746	36746	36746
		S/T	0.73	0.83	0.98	1.00	0.58	0.66	0.76	0.85	0.50	0.60	0.68	0.77	0.34	0.42	0.50	0.59
		PI	1.97	1.97	1.97	1.97	1.98	1.98	1.98	1.98	1.97	1.97	1.97	1.97	1.98	1.98	1.98	1.98
	5	TC	32078	32078	32386	32695	33746	33746	33746	34052	34514	34514	34514	34514	36721	36721	36721	36721
		S/T	0.73	0.83	0.98	1.00	0.58	0.67	0.76	0.85	0.50	0.60	0.69	0.77	0.34	0.42	0.50	0.59
		PI	1.86	1.86	1.86	1.86	1.85	1.85	1.85	1.85	1.84	1.84	1.84	1.84	1.85	1.85	1.85	1.85
	14	TC	31888	31888	32194	32501	33557	33557	33557	33861	34341	34341	34341	34341	36597	36597	36597	36597
		S/T	0.74	0.83	0.99	1.00	0.58	0.67	0.77	0.85	0.50	0.60	0.69	0.78	0.34	0.43	0.50	0.59
		PI	1.85	1.85	1.85	1.85	1.84	1.84	1.84	1.84	1.84	1.84	1.84	1.84	1.85	1.85	1.85	1.85
	23	TC	31698	31698	32002	32307	33431	33431	33431	33734	34215	34215	34215	34215	36504	36504	36504	36504
		S/T	0.74	0.84	0.99	1.00	0.59	0.67	0.77	0.86	0.51	0.60	0.69	0.78	0.34	0.43	0.51	0.59
		PI	1.84	1.84	1.84	1.84	1.84	1.84	1.84	1.84	1.84	1.84	1.84	1.84	1.85	1.85	1.85	1.85
	32	TC	31539	31539	31842	32146	33304	33304	33304	33606	34120	34120	34120	34120	36473	36473	36473	36473
		S/T	0.74	0.84	1.00	1.00	0.59	0.68	0.77	0.86	0.51	0.61	0.70	0.78	0.34	0.43	0.51	0.60
		PI	1.85	1.85	1.85	1.85	1.85	1.85	1.85	1.85	1.84	1.84	1.84	1.84	1.86	1.86	1.86	1.86
	41	TC	31381	31381	31682	31984	33178	33178	33178	33478	34010	34010	34010	34010	36442	36442	36442	36442
		S/T	0.75	0.85	1.00	1.00	0.59	0.68	0.78	0.87	0.51	0.61	0.70	0.79	0.34	0.43	0.51	0.60
		PI	1.87	1.87	1.87	1.87	1.86	1.86	1.86	1.86	1.86	1.86	1.86	1.86	1.87	1.87	1.87	1.87
	50	TC	31190	31190	31490	31790	33020	33020	33020	33319	33868	33868	33868	33868	36348	36348	36348	36348
		S/T	0.75	0.85	1.00	1.00	0.59	0.68	0.78	0.87	0.51	0.61	0.70	0.79	0.35	0.44	0.51	0.60
		PI	1.90	1.90	1.90	1.90	1.89	1.89	1.89	1.89	1.89	1.89	1.89	1.89	1.90	1.90	1.90	1.90
	59	TC	30937	30937	31234	31532	32799	32799	32799	33096	33664	33664	33664	33664	36193	36193	36193	36193
		S/T	0.76	0.86	0.96	1.00	0.60	0.69	0.79	0.88	0.52	0.62	0.71	0.80	0.35	0.44	0.52	0.61
		PI	1.95	1.95	1.95	1.95	1.94	1.94	1.94	1.94	1.93	1.93	1.93	1.93	1.94	1.94	1.94	1.94
	68	TC	30588	30588	30882	31176	32451	32451	32451	32745	33333	33333	33333	33333	35882	35882	35882	35882
		S/T	0.76	0.86	0.96	1.00	0.60	0.69	0.79	0.88	0.52	0.62	0.71	0.80	0.35	0.44	0.52	0.61
		PI	2.01	2.01	2.01	2.01	2.00	2.00	2.00	2.00	1.99	1.99	1.99	1.99	1.99	1.99	1.99	1.99
	77	TC	29118	29118	29412	29706	30980	30980	30980	31275	31863	31863	31863	31863	34314	34314	34314	34314
		S/T	0.77	0.88	0.98	1.00	0.60	0.70	0.80	0.90	0.52	0.62	0.72	0.82	0.35	0.44	0.53	0.62
		PI	2.22	2.22	2.22	2.22	2.21	2.21	2.21	2.21	2.21	2.21	2.21	2.21	2.22	2.22	2.22	2.22
	86	TC	27745	28039	28333	28627	29510	29510	29510	29804	30392	30392	30392	30392	32843	32843	32843	32843
		S/T	0.78	0.89	1.00	1.00	0.61	0.71	0.82	0.92	0.53	0.63	0.73	0.84	0.34	0.44	0.53	0.63
		PI	2.43	2.43	2.43	2.43	2.43	2.43	2.43	2.43	2.44	2.44	2.44	2.44	2.45	2.45	2.45	2.45
	95	TC	26373	26667	26961	27255	28137	28137	28137	28431	28922	28922	29412	28922	31275	31275	31275	31275
		S/T	0.80	0.91	1.00	1.00	0.62	0.73	0.84	0.95	0.53	0.64	0.74	0.86	0.34	0.44	0.54	0.64
		PI	2.65	2.65	2.65	2.65	2.66	2.66	2.66	2.66	2.67	2.67	2.67	2.67	2.67	2.67	2.67	2.67
	104	TC	24880	25130	25379	25629	26557	26557	26691	26985	27342	27342	27609	27476	29563	29563	29563	29563
		S/T	0.83	0.95	1.00	1.00	0.63	0.75	0.88	0.99	0.54	0.66	0.78	0.89	0.34	0.45	0.56	0.67
		PI	2.92	2.92	2.92	2.92	2.94	2.94	2.94	2.94	2.95	2.95	2.95	2.95	2.96	2.96	2.96	2.96
	115	TC	23060	23256	23452	23649	24630	24630	24924	25219	25415	25415	25415	25709	27476	27476	27476	27476
		S/T	0.84	0.97	1.00	1.00	0.64	0.77	0.89	1.00	0.55	0.67	0.79	0.91	0.33	0.45	0.56	0.68
		PI	3.25	3.25	3.25	3.25	3.27	3.27	3.27	3.27	3.28	3.28	3.28	3.28	3.31	3.31	3.31	3.31
	122	TC	21588	21784	21981	22177	23060	23060	23256	23452	23845	23845	23845	24041	25906	25906	25906	25906
		S/T	0.87	1.00	1.00	1.00	0.65	0.79	0.92	1.00	0.55	0.68	0.82	0.94	0.33	0.45	0.57	0.91
		PI	3.53	3.53	3.53	3.53	3.55	3.55	3.55	3.55	3.55	3.55	3.55	3.55	3.58	3.58	3.58	3.58

Manufacturer reserves the right to change, at any time, specifications and designs without notice and without obligations.

COOLING PERFORMANCE - 30K HH (Sheet 3 of 4)

AIRFLOW (CFM)	OUTDOOR (DB F)	ID (WB F)	60.8				64.4				66.2				71.6			
		ID (DB F)	73.4	77.0	80.6	84.2	73.4	77.0	80.6	84.2	73.4	77.0	80.6	84.2	73.4	77.0	80.6	84.2
895	-22	TC	33241	33554	33868	34182	34783	34783	34783	35093	35603	35603	35603	35603	37658	37658	37658	37658
		S/T	0.74	0.85	1.00	1.00	0.58	0.68	0.78	0.96	0.50	0.60	0.69	0.79	0.32	0.42	0.50	0.60
		PI	2.29	2.29	2.29	2.29	2.30	2.30	2.30	2.30	2.31	2.31	2.31	2.31	2.32	2.32	2.32	2.32
	-10	TC	32995	33307	33618	33929	34586	34586	34586	34893	35426	35426	35426	35426	37544	37544	37544	37544
		S/T	0.75	0.85	1.00	1.00	0.58	0.68	0.79	0.97	0.51	0.60	0.70	0.79	0.33	0.42	0.51	0.60
		PI	2.07	2.07	2.07	2.07	2.08	2.08	2.08	2.08	2.08	2.08	2.08	2.08	2.09	2.09	2.09	2.09
	0	TC	32791	33100	33409	33719	34421	34421	34421	34728	35277	35277	35277	35277	37449	37449	37449	37449
		S/T	0.75	0.86	1.00	1.00	0.59	0.68	0.79	0.97	0.51	0.61	0.70	0.80	0.33	0.42	0.51	0.61
		PI	2.00	2.00	2.00	2.00	2.01	2.01	2.01	2.01	2.01	2.01	2.01	2.01	2.01	2.01	2.01	2.01
	5	TC	32695	33003	33312	33620	34358	34358	34358	34664	35224	35224	35224	35224	37423	37423	37423	37423
		S/T	0.75	0.86	1.00	1.00	0.59	0.69	0.79	0.98	0.51	0.61	0.70	0.80	0.33	0.42	0.51	0.61
		PI	1.88	1.88	1.88	1.88	1.88	1.88	1.88	1.88	1.88	1.88	1.88	1.88	1.87	1.87	1.87	1.87
	14	TC	32501	32808	33114	33421	34165	34165	34165	34469	35048	35048	35048	35048	37297	37297	37297	37297
		S/T	0.76	0.86	1.00	1.00	0.59	0.69	0.80	0.98	0.51	0.61	0.71	0.81	0.33	0.43	0.51	0.61
		PI	1.87	1.87	1.87	1.87	1.88	1.88	1.88	1.88	1.87	1.87	1.87	1.87	1.88	1.88	1.88	1.88
	23	TC	32307	32612	32917	33222	34037	34037	34037	34340	34919	34919	34919	34919	37202	37202	37202	37202
		S/T	0.76	0.87	1.00	1.00	0.59	0.69	0.80	0.99	0.52	0.61	0.71	0.81	0.33	0.43	0.52	0.61
		PI	1.87	1.87	1.87	1.87	1.88	1.88	1.88	1.88	1.87	1.87	1.87	1.87	1.88	1.88	1.88	1.88
	32	TC	32146	32449	32752	33055	33908	33908	33908	34210	34823	34823	34823	34823	37170	37170	37170	37170
		S/T	0.76	0.87	1.00	1.00	0.60	0.70	0.80	0.99	0.52	0.62	0.72	0.81	0.33	0.43	0.52	0.62
		PI	1.88	1.88	1.88	1.88	1.88	1.88	1.88	1.88	1.88	1.88	1.88	1.88	1.88	1.88	1.88	1.88
	41	TC	31984	32286	32588	32889	33779	33779	33779	34080	34710	34710	34710	34710	37139	37139	37139	37139
		S/T	0.77	0.88	1.00	1.00	0.60	0.70	0.81	1.00	0.52	0.62	0.72	0.82	0.33	0.43	0.52	0.62
		PI	1.89	1.89	1.89	1.89	1.90	1.90	1.90	1.90	1.90	1.90	1.90	1.90	1.90	1.90	1.90	1.90
	50	TC	31790	32090	32390	32690	33618	33618	33618	33918	34566	34566	34566	34566	37044	37044	37044	37044
		S/T	0.77	0.88	1.00	1.00	0.60	0.70	0.81	1.00	0.52	0.62	0.72	0.82	0.34	0.44	0.52	0.62
		PI	1.93	1.93	1.93	1.93	1.93	1.93	1.93	1.93	1.92	1.92	1.92	1.92	1.92	1.92	1.92	1.92
	59	TC	31532	31829	32127	32424	33393	33393	33393	33690	34357	34357	34357	34357	36885	36885	36885	36885
		S/T	0.78	0.89	0.99	1.00	0.61	0.71	0.82	0.92	0.53	0.63	0.73	0.83	0.34	0.44	0.53	0.63
		PI	1.97	1.97	1.97	1.97	1.98	1.98	1.98	1.98	1.97	1.97	1.97	1.97	1.96	1.96	1.96	1.96
	68	TC	31176	31471	31765	32059	33039	33039	33039	33333	34020	34020	34020	34020	36569	36569	36569	36569
		S/T	0.78	0.89	0.99	1.00	0.61	0.71	0.82	0.92	0.53	0.63	0.73	0.83	0.34	0.44	0.53	0.63
		PI	2.04	2.04	2.04	2.04	2.04	2.04	2.04	2.04	2.03	2.03	2.03	2.03	2.02	2.02	2.02	2.02
	77	TC	29706	30000	30294	30588	31569	31569	31569	31863	32549	32549	32549	32549	35000	35000	35000	35000
		S/T	0.79	0.91	1.00	1.00	0.61	0.72	0.83	0.94	0.53	0.64	0.75	0.85	0.34	0.44	0.54	0.64
		PI	2.26	2.26	2.26	2.26	2.26	2.26	2.26	2.26	2.26	2.26	2.26	2.26	2.26	2.26	2.26	2.26
	86	TC	28333	28627	28922	29216	30098	30098	30098	30392	31078	31078	31078	31078	33431	33431	33431	33431
		S/T	0.81	0.92	1.00	1.00	0.62	0.74	0.85	0.96	0.54	0.65	0.76	0.87	0.34	0.44	0.55	0.65
		PI	2.47	2.47	2.47	2.47	2.47	2.47	2.47	2.47	2.47	2.47	2.47	2.47	2.48	2.48	2.48	2.48
	95	TC	26961	27255	27549	27843	28627	28627	28627	28922	29510	29510	30000	30294	31863	31863	31863	31863
		S/T	0.82	0.95	1.00	1.00	0.63	0.75	0.87	0.99	0.54	0.66	0.77	0.88	0.34	0.44	0.55	0.66
		PI	2.70	2.70	2.70	2.70	2.71	2.71	2.71	2.71	2.72	2.72	2.72	2.72	2.73	2.73	2.73	2.73
	104	TC	25379	25629	25879	26129	27047	27047	27181	27476	27886	27886	28154	28448	30152	30152	30152	30152
		S/T	0.86	0.99	1.00	1.00	0.65	0.78	0.91	1.00	0.55	0.68	0.81	0.93	0.33	0.45	0.57	0.90
		PI	2.98	2.98	2.98	2.98	2.99	2.99	2.99	2.99	3.00	3.00	3.00	3.00	3.02	3.02	3.02	3.02
	115	TC	23452	23649	23845	24041	25121	25121	25415	25709	25906	25906	25906	26200	28064	28064	28064	28064
		S/T	0.87	1.00	1.00	1.00	0.66	0.79	0.93	1.00	0.56	0.69	0.83	0.95	0.33	0.45	0.58	0.92
		PI	3.32	3.32	3.32	3.32	3.33	3.33	3.33	3.33	3.34	3.34	3.34	3.34	3.37	3.37	3.37	3.37
	122	TC	22079	22275	22471	22667	23551	23551	23747	23943	24336	24336	24336	24532	26396	26396	26396	26396
		S/T	0.90	1.00	1.00	1.00	0.67	0.82	0.96	1.00	0.56	0.71	0.85	0.99	0.32	0.46	0.59	0.97
		PI	3.60	3.60	3.60	3.60	3.61	3.61	3.61	3.61	3.62	3.62	3.62	3.62	3.64	3.64	3.64	3.64

Manufacturer reserves the right to change, at any time, specifications and designs without notice and without obligations.

COOLING PERFORMANCE - 30K HH (Sheet 4 of 4)

AIRFLOW (CFM)	OUTDOOR (DB F)	ID (WB F)	60.8				64.4				66.2				71.6			
		ID (DB F)	73.4	77.0	80.6	84.2	73.4	77.0	80.6	84.2	73.4	77.0	80.6	84.2	73.4	77.0	80.6	84.2
988	-22	TC	33880	34522	34836	35149	35413	35413	35413	35723	36336	36336	36336	36336	38378	38378	38378	38378
		S/T	0.76	0.88	1.00	1.00	0.59	0.69	0.81	1.00	0.51	0.61	0.71	0.82	0.31	0.42	0.51	0.62
		PI	1.91	1.91	1.91	1.91	1.92	1.92	1.92	1.92	1.91	1.91	1.91	1.91	1.89	1.89	1.89	1.89
	-10	TC	33630	34267	34578	34889	35212	35212	35212	35520	36155	36155	36155	36155	38262	38262	38262	38262
		S/T	0.77	0.88	1.00	1.00	0.59	0.70	0.81	1.00	0.52	0.61	0.72	0.82	0.32	0.42	0.52	0.62
		PI	1.91	1.91	1.91	1.91	1.92	1.92	1.92	1.92	1.91	1.91	1.91	1.91	1.89	1.89	1.89	1.89
	0	TC	33421	34055	34364	34673	35045	35045	35045	35351	36004	36004	36004	36004	38165	38165	38165	38165
		S/T	0.77	0.89	1.00	1.00	0.60	0.70	0.82	1.00	0.52	0.62	0.72	0.83	0.32	0.42	0.52	0.63
		PI	1.91	1.91	1.91	1.91	1.92	1.92	1.92	1.92	1.91	1.91	1.91	1.91	1.90	1.90	1.90	1.90
	5	TC	33324	33955	34264	34572	34981	34981	34981	35287	35949	35949	35949	35949	38139	38139	38139	38139
		S/T	0.77	0.89	1.00	1.00	0.60	0.71	0.82	1.00	0.52	0.62	0.72	0.83	0.32	0.42	0.52	0.63
		PI	1.91	1.91	1.91	1.91	1.92	1.92	1.92	1.92	1.91	1.91	1.91	1.91	1.90	1.90	1.90	1.90
	14	TC	33126	33754	34060	34367	34784	34784	34784	35089	35769	35769	35769	35769	38010	38010	38010	38010
		S/T	0.78	0.89	1.00	1.00	0.60	0.71	0.83	1.00	0.52	0.62	0.73	0.84	0.32	0.43	0.52	0.63
		PI	1.90	1.90	1.90	1.90	1.92	1.92	1.92	1.92	1.91	1.91	1.91	1.91	1.90	1.90	1.90	1.90
	23	TC	32929	33553	33857	34162	34653	34653	34653	34956	35638	35638	35638	35638	37913	37913	37913	37913
		S/T	0.78	0.90	1.00	1.00	0.60	0.71	0.83	1.00	0.53	0.62	0.73	0.84	0.32	0.43	0.53	0.63
		PI	1.90	1.90	1.90	1.90	1.91	1.91	1.91	1.91	1.91	1.91	1.91	1.91	1.91	1.91	1.91	1.91
	32	TC	32764	33385	33688	33991	34522	34522	34522	34824	35540	35540	35540	35540	37881	37881	37881	37881
		S/T	0.78	0.90	1.00	1.00	0.61	0.72	0.83	1.00	0.53	0.63	0.74	0.84	0.32	0.43	0.53	0.64
		PI	1.91	1.91	1.91	1.91	1.92	1.92	1.92	1.92	1.92	1.92	1.92	1.92	1.91	1.91	1.91	1.91
	41	TC	32599	33217	33519	33820	34391	34391	34391	34692	35425	35425	35425	35425	37849	37849	37849	37849
		S/T	0.79	0.91	0.99	0.99	0.61	0.72	0.84	1.00	0.53	0.63	0.74	0.85	0.33	0.43	0.53	0.64
		PI	1.92	1.92	1.92	1.92	1.94	1.94	1.94	1.94	1.93	1.93	1.93	1.93	1.93	1.93	1.93	1.93
	50	TC	32402	33016	33316	33615	34228	34228	34228	34527	35277	35277	35277	35277	37752	37752	37752	37752
		S/T	0.79	0.91	1.00	1.00	0.61	0.72	0.84	1.00	0.53	0.63	0.74	0.85	0.33	0.44	0.53	0.64
		PI	1.95	1.95	1.95	1.95	1.97	1.97	1.97	1.97	1.96	1.96	1.96	1.96	1.95	1.95	1.95	1.95
	59	TC	32138	32747	33045	33342	33998	33998	33998	34296	35064	35064	35064	35064	37591	37591	37591	37591
		S/T	0.80	0.92	1.00	1.00	0.62	0.73	0.85	0.96	0.54	0.64	0.75	0.86	0.33	0.44	0.54	0.65
		PI	2.00	2.00	2.00	2.00	2.01	2.01	2.01	2.01	2.01	2.01	2.01	2.01	1.99	1.99	1.99	1.99
	68	TC	31776	32378	32672	32966	33638	33638	33638	33932	34720	34720	34720	34720	37268	37268	37268	37268
		S/T	0.80	0.92	1.00	1.00	0.62	0.73	0.85	0.96	0.54	0.64	0.75	0.86	0.33	0.44	0.54	0.65
		PI	2.07	2.07	2.07	2.07	2.08	2.08	2.08	2.08	2.07	2.07	2.07	2.07	2.05	2.05	2.05	2.05
	77	TC	30306	30909	31203	31497	32168	32168	32168	32462	33250	33250	33250	33250	35700	35700	35700	35700
		S/T	0.81	0.94	1.00	1.00	0.62	0.74	0.86	0.98	0.54	0.66	0.78	0.88	0.33	0.44	0.55	0.66
		PI	2.30	2.30	2.30	2.30	2.31	2.31	2.31	2.31	2.31	2.31	2.31	2.31	2.30	2.30	2.30	2.30
	86	TC	28934	29228	29522	29816	30698	30698	30698	30992	31780	31780	31780	31780	34030	34030	34030	34030
		S/T	0.84	0.95	1.00	1.00	0.63	0.77	0.88	1.00	0.55	0.67	0.79	0.90	0.34	0.44	0.57	0.67
		PI	2.52	2.52	2.52	2.52	2.52	2.52	2.52	2.52	2.51	2.51	2.51	2.51	2.52	2.52	2.52	2.52
	95	TC	27562	27856	28150	28444	29126	29126	29126	29420	30110	30110	30600	31732	32462	32462	32462	32462
		S/T	0.84	0.99	1.00	1.00	0.64	0.77	0.90	1.00	0.55	0.68	0.80	0.90	0.34	0.44	0.56	0.68
		PI	2.75	2.75	2.75	2.75	2.76	2.76	2.76	2.76	2.77	2.77	2.77	2.77	2.79	2.79	2.79	2.79
	104	TC	25889	26139	26388	26638	27547	27547	27681	27975	28441	28441	28709	29455	30752	30752	30752	30752
		S/T	0.89	1.00	1.00	1.00	0.67	0.81	0.94	1.00	0.56	0.70	0.84	0.97	0.32	0.45	0.58	1.00
		PI	3.04	3.04	3.04	3.04	3.05	3.05	3.05	3.05	3.06	3.06	3.06	3.06	3.08	3.08	3.08	3.08
	115	TC	23852	24048	24244	24440	25621	25621	25915	26210	26406	26406	26406	26700	28666	28666	28666	28666
		S/T	0.90	1.00	1.00	1.00	0.68	0.81	0.97	1.00	0.57	0.71	0.87	0.99	0.33	0.45	0.60	1.00
		PI	3.39	3.39	3.39	3.39	3.39	3.39	3.39	3.39	3.40	3.40	3.40	3.40	3.43	3.43	3.43	3.43
	122	TC	22580	22777	22973	23169	24052	24052	24248	24444	24836	24836	24836	25032	26896	26896	26896	26896
		S/T	0.93	1.00	1.00	1.00	0.69	0.85	1.00	1.00	0.57	0.74	0.88	1.00	0.31	0.47	0.61	1.00
		PI	3.67	3.67	3.67	3.67	3.67	3.67	3.67	3.67	3.69	3.69	3.69	3.69	3.71	3.71	3.71	3.71

LEGEND

TC - Total Cooling Capacity (BTU/hr)
S/T - Sensible Cooling Capacity Ratio
PI - Power Input (kW)

Gray shaded area is Extrapolated Data

HEATING PERFORMANCE AT INDOOR DRY BULB TEMPERATURE- 30K HH (Sheet 1 of 2)

AIRFLOW (CFM)	OUTDOOR (DB F)	TC: TOTAL CAPACITY IN BTU/HR				PI: TOTAL POWER IN KILOWATTS			
		Indoor Conditions (DB F)				Indoor Conditions (DB F)			
		60.8	68.0	71.6	75.2	60.8	68.0	71.6	75.2
712	-22.0	19319	19121	18989	18923	2.31	2.39	2.34	2.35
	-10.0	22228	22001	21849	21773	2.71	2.80	2.74	2.76
	0.0	24653	24400	24232	24148	3.04	3.14	3.08	3.09
	5.0	25950	25684	25507	25418	3.22	3.33	3.26	3.28
	14.0	27709	27425	27236	27142	3.43	3.55	3.48	3.50
	17.0	29029	28731	28533	28434	3.65	3.77	3.70	3.72
	22.0	29029	28731	28533	28434	3.55	3.58	3.60	3.61
	27.0	28929	28632	28434	28335	3.37	3.39	3.40	3.42
	32.0	28533	28236	28038	27840	3.19	3.20	3.21	3.22
	37.0	29128	28731	28632	28434	3.04	3.04	3.05	3.05
	42.0	30713	30316	30118	29920	2.88	2.88	2.88	2.88
	44.6	32427	32009	31613	31414	2.81	2.72	2.80	2.80
	52.0	33099	32703	32405	32207	2.56	2.55	2.54	2.53
	57.0	33694	33198	33000	32703	2.40	2.37	2.36	2.35
	62.0	34288	33793	33495	33297	2.24	2.21	2.19	2.18
	64.4	34586	34090	33793	33495	2.16	2.12	2.11	2.09
806	-22.0	19729	19531	19465	19334	2.33	2.41	2.37	2.37
	-10.0	22701	22473	22397	22245	2.73	2.83	2.77	2.78
	0.0	25177	24925	24840	24672	3.06	3.17	3.11	3.12
	5.0	26502	26236	26147	25970	3.24	3.36	3.30	3.30
	14.0	28298	28015	27920	27731	3.46	3.58	3.52	3.52
	17.0	29646	29349	29249	29051	3.68	3.81	3.74	3.74
	22.0	29623	29326	29227	29029	3.58	3.61	3.63	3.65
	27.0	29524	29227	29128	28929	3.40	3.42	3.44	3.45
	32.0	29128	28830	28632	28533	3.22	3.24	3.24	3.25
	37.0	29722	29425	29227	29029	3.07	3.07	3.08	3.08
	42.0	31307	30911	30713	30515	2.91	2.91	2.91	2.91
	44.6	33122	32703	32306	32108	2.84	2.75	2.83	2.83
	52.0	33892	33396	33198	32901	2.59	2.58	2.57	2.56
	57.0	34486	33991	33694	33495	2.42	2.40	2.39	2.38
	62.0	35081	34486	34288	33991	2.27	2.24	2.22	2.21
	64.4	35378	34784	34486	34288	2.19	2.15	2.14	2.12

Manufacturer reserves the right to change, at any time, specifications and designs without notice and without obligations.

HEATING PERFORMANCE AT INDOOR DRY BULB TEMPERATURE- 30K HH (Sheet 2 of 2)

AIRFLOW (CFM)	OUTDOOR (DB F)	TC: TOTAL CAPACITY IN BTU/HR				PI: TOTAL POWER IN KILOWATTS			
		Indoor Conditions (DB F)				Indoor Conditions (DB F)			
		60.8	68.0	71.6	75.2	60.8	68.0	71.6	75.2
895	-22.0	19912	19714	19582	19516	2.35	2.44	2.38	2.40
	-10.0	22911	22683	22532	22456	2.76	2.85	2.79	2.81
	0.0	25410	25158	24989	24905	3.09	3.20	3.13	3.15
	5.0	26747	26481	26304	26215	3.28	3.39	3.32	3.34
	14.0	28560	28276	28087	27993	3.50	3.62	3.54	3.56
	17.0	29920	29623	29425	29326	3.72	3.84	3.76	3.78
	22.0	29920	29623	29425	29326	3.62	3.65	3.66	3.68
	27.0	29821	29524	29326	29227	3.43	3.46	3.47	3.48
	32.0	29425	29128	28929	28731	3.25	3.27	3.28	3.28
	37.0	30019	29623	29524	29326	3.10	3.11	3.11	3.11
	42.0	31604	31208	31010	30812	2.94	2.94	2.94	2.94
	44.6	33419	33000	32604	32405	2.87	2.78	2.86	2.86
	52.0	34189	33694	33495	33198	2.62	2.61	2.60	2.59
	57.0	34784	34288	33991	33793	2.45	2.43	2.42	2.41
	62.0	35378	34784	34586	34288	2.29	2.26	2.25	2.23
	64.4	35676	35081	34883	34586	2.21	2.18	2.16	2.14
988	-22.0	20096	19898	19700	19701	2.38	2.46	2.40	2.42
	-10.0	23123	22895	22667	22668	2.79	2.88	2.82	2.84
	0.0	25645	25393	25139	25141	3.13	3.23	3.16	3.18
	5.0	26994	26729	26462	26463	3.31	3.42	3.35	3.37
	14.0	28824	28541	28256	28257	3.53	3.65	3.57	3.60
	17.0	30197	29900	29601	29603	3.76	3.88	3.79	3.82
	22.0	30220	29923	29624	29626	3.66	3.69	3.69	3.71
	27.0	30121	29824	29525	29527	3.46	3.50	3.50	3.51
	32.0	29725	29428	29230	28931	3.28	3.30	3.32	3.31
	37.0	30319	29822	29824	29626	3.13	3.15	3.14	3.14
	42.0	31904	31508	31310	31112	2.97	2.97	2.97	2.97
	44.6	33719	33300	32904	32705	2.90	2.81	2.89	2.89
	52.0	34489	33994	33795	33498	2.65	2.64	2.63	2.62
	57.0	35084	34588	34291	34093	2.48	2.46	2.45	2.44
	62.0	35678	35084	34885	34588	2.31	2.28	2.28	2.25
	64.4	35975	35381	35284	34885	2.23	2.21	2.18	2.16

Gray shaded area is Extrapolated Data

COOLING PERFORMANCE - 36K (Sheet 1 of 4)

AIRFLOW (CFM)	OUTDOOR (DB F)	ID (WB F)	60.8				64.4				66.2				71.6			
		ID (DB F)	73.4	77.0	80.6	84.2	73.4	77.0	80.6	84.2	73.4	77.0	80.6	84.2	73.4	77.0	80.6	84.2
865	-22	TC	38348	38369	38369	38369	40157	40998	40998	40998	41048	41048	41048	41048	43420	43420	43420	43420
		S/T	0.65	0.70	0.77	0.83	0.54	0.60	0.66	0.71	0.49	0.54	0.60	0.66	0.37	0.43	0.48	0.52
		PI	3.16	3.16	3.16	3.16	3.17	3.17	3.17	3.17	3.17	3.17	3.17	3.17	3.20	3.20	3.20	3.20
	-10	TC	38065	38086	38086	38086	39929	40765	40765	40765	40843	40843	40843	40843	43288	43288	43288	43288
		S/T	0.65	0.71	0.78	0.83	0.55	0.60	0.66	0.72	0.50	0.55	0.60	0.66	0.37	0.43	0.48	0.53
		PI	2.86	2.86	2.86	2.86	2.86	2.86	2.86	2.86	2.86	2.86	2.86	2.86	2.88	2.88	2.88	2.88
	0	TC	37829	37850	37850	37850	39739	40572	40572	40572	40672	40672	40672	40672	43179	43179	43179	43179
		S/T	0.65	0.71	0.78	0.84	0.55	0.60	0.66	0.72	0.50	0.55	0.61	0.66	0.38	0.43	0.48	0.53
		PI	2.67	2.67	2.67	2.67	2.67	2.67	2.67	2.67	2.67	2.67	2.67	2.67	2.68	2.68	2.68	2.68
	5	TC	37719	37739	37739	37739	39666	40497	40497	40497	40611	40611	40611	40611	43150	43150	43150	43150
		S/T	0.66	0.71	0.78	0.84	0.55	0.61	0.67	0.72	0.50	0.55	0.61	0.67	0.38	0.43	0.48	0.53
		PI	2.51	2.51	2.51	2.51	2.50	2.50	2.50	2.50	2.49	2.49	2.49	2.49	2.49	2.49	2.49	2.49
	14	TC	37495	37515	37515	37515	39444	40270	40270	40270	40407	40407	40407	40407	43004	43004	43004	43004
		S/T	0.66	0.72	0.79	0.84	0.55	0.61	0.67	0.73	0.50	0.55	0.61	0.67	0.38	0.44	0.49	0.53
		PI	2.49	2.49	2.49	2.49	2.49	2.49	2.49	2.49	2.49	2.49	2.49	2.49	2.49	2.49	2.49	2.49
	23	TC	37271	37292	37292	37292	39295	40118	40118	40118	40259	40259	40259	40259	42894	42894	42894	42894
		S/T	0.66	0.72	0.79	0.85	0.56	0.61	0.67	0.73	0.51	0.56	0.61	0.67	0.38	0.44	0.49	0.54
		PI	2.49	2.49	2.49	2.49	2.49	2.49	2.49	2.49	2.49	2.49	2.49	2.49	2.50	2.50	2.50	2.50
	32	TC	37085	37105	37105	37105	39146	39967	39967	39967	40148	40148	40148	40148	42857	42857	42857	42857
		S/T	0.67	0.73	0.79	0.85	0.56	0.61	0.68	0.74	0.51	0.56	0.62	0.68	0.38	0.44	0.49	0.54
		PI	2.50	2.50	2.50	2.50	2.50	2.50	2.50	2.50	2.50	2.50	2.50	2.50	2.50	2.50	2.50	2.50
	41	TC	36899	36919	36919	36919	38998	39815	39815	39815	40019	40019	40019	40019	42821	42821	42821	42821
		S/T	0.67	0.73	0.80	0.86	0.56	0.62	0.68	0.74	0.51	0.56	0.62	0.68	0.38	0.44	0.49	0.54
		PI	2.52	2.52	2.52	2.52	2.52	2.52	2.52	2.52	2.52	2.52	2.52	2.52	2.52	2.52	2.52	2.52
	50	TC	36675	36695	36695	36695	38812	39625	39625	39625	39852	39852	39852	39852	42711	42711	42711	42711
		S/T	0.67	0.73	0.80	0.86	0.56	0.62	0.68	0.74	0.51	0.56	0.62	0.68	0.39	0.45	0.50	0.54
		PI	2.56	2.56	2.56	2.56	2.56	2.56	2.56	2.56	2.55	2.55	2.55	2.55	2.56	2.56	2.56	2.56
	59	TC	36377	36397	36397	36397	38552	39360	39360	39360	39611	39611	39611	39611	42529	42529	42529	42529
		S/T	0.68	0.74	0.81	0.87	0.57	0.62	0.69	0.75	0.52	0.57	0.63	0.69	0.39	0.45	0.50	0.55
		PI	2.63	2.63	2.63	2.63	2.62	2.62	2.62	2.62	2.61	2.61	2.61	2.61	2.61	2.61	2.61	2.61
	68	TC	35967	35986	35986	35986	38144	38144	38144	38144	39222	39222	39222	39222	42164	42164	42164	42164
		S/T	0.68	0.74	0.81	0.87	0.57	0.63	0.69	0.75	0.52	0.57	0.63	0.69	0.39	0.45	0.50	0.55
		PI	2.72	2.72	2.72	2.72	2.71	2.71	2.71	2.71	2.70	2.70	2.70	2.70	2.69	2.69	2.69	2.69
	77	TC	34319	34319	34319	34319	36477	36477	36477	36477	37555	37555	37555	37555	40399	40399	40399	40399
		S/T	0.68	0.75	0.82	0.88	0.57	0.63	0.69	0.75	0.51	0.57	0.63	0.69	0.39	0.44	0.50	0.56
		PI	2.99	2.99	2.99	2.99	2.99	2.99	2.99	2.99	2.99	2.99	2.99	2.99	2.99	2.99	2.99	2.99
	86	TC	32653	32653	32653	32947	34810	34810	34810	34810	35790	35790	35790	35790	38634	38634	38634	38634
		S/T	0.69	0.76	0.83	0.89	0.57	0.63	0.70	0.76	0.51	0.58	0.64	0.70	0.38	0.44	0.50	0.56
		PI	3.28	3.28	3.28	3.28	3.29	3.29	3.29	3.29	3.29	3.29	3.29	3.29	3.31	3.31	3.31	3.31
	95	TC	31084	31084	31084	31378	33045	33045	33045	33045	34123	34123	34614	34123	36771	36771	36771	36771
		S/T	0.69	0.77	0.84	0.91	0.57	0.64	0.71	0.78	0.51	0.58	0.64	0.71	0.38	0.44	0.50	0.56
		PI	3.58	3.58	3.58	3.58	3.60	3.60	3.60	3.60	3.60	3.60	3.61	3.60	3.63	3.63	3.63	3.63
	104	TC	29259	29259	29259	29553	31176	31176	31176	31176	32165	32165	32433	32165	34724	34724	34724	34724
		S/T	0.71	0.79	0.87	0.94	0.57	0.65	0.72	0.80	0.51	0.59	0.66	0.73	0.37	0.44	0.50	0.57
		PI	3.96	3.96	3.96	3.96	3.98	3.98	3.98	3.98	3.99	3.99	3.99	3.99	4.02	4.02	4.02	4.02
	115	TC	27066	27066	27066	27360	28929	28929	28929	28929	29812	29812	29812	29812	32263	32263	32263	32263
		S/T	0.71	0.80	0.88	0.96	0.58	0.66	0.73	0.81	0.51	0.59	0.66	0.74	0.37	0.44	0.51	0.58
		PI	4.40	4.40	4.40	4.40	4.43	4.43	4.43	4.43	4.44	4.44	4.44	4.44	4.47	4.47	4.47	4.47
	122	TC	25399	25399	25693	25987	27164	27164	27164	27164	28046	28046	28046	28046	30400	30400	30400	30400
		S/T	0.73	0.82	0.90	0.98	0.58	0.66	0.75	0.83	0.51	0.60	0.68	0.76	0.36	0.44	0.51	0.58
		PI	4.78	4.78	4.78	4.78	4.80	4.80	4.80	4.80	4.80	4.80	4.80	4.80	4.84	4.84	4.84	4.84

Manufacturer reserves the right to change, at any time, specifications and designs without notice and without obligations.

COOLING PERFORMANCE - 36K (Sheet 2 of 4)

AIRFLOW (CFM)	OUTDOOR (DB F)	ID (WB F)	60.8				64.4				66.2				71.6			
		ID (DB F)	73.4	77.0	80.6	84.2	73.4	77.0	80.6	84.2	73.4	77.0	80.6	84.2	73.4	77.0	80.6	84.2
971	-22	TC	39116	39116	39116	39534	40998	40998	40998	40998	41885	41885	41885	41885	44345	44345	44345	44345
		S/T	0.68	0.76	0.97	1.00	0.55	0.63	0.70	0.78	0.48	0.56	0.64	0.70	0.34	0.42	0.48	0.55
		PI	3.16	3.16	3.16	3.16	3.17	3.17	3.17	3.17	3.17	3.17	3.17	3.17	3.20	3.20	3.20	3.20
	-10	TC	38827	38827	38827	39242	40765	40765	40765	40765	41676	41676	41676	41676	44211	44211	44211	44211
		S/T	0.69	0.77	0.97	1.00	0.56	0.63	0.71	0.79	0.49	0.56	0.64	0.71	0.34	0.42	0.49	0.56
		PI	2.86	2.86	2.86	2.86	2.86	2.86	2.86	2.86	2.86	2.86	2.86	2.86	2.88	2.88	2.88	2.88
	0	TC	38586	38586	38586	38999	40572	40572	40572	40572	41502	41502	41502	41502	44099	44099	44099	44099
		S/T	0.69	0.77	0.98	1.00	0.56	0.64	0.71	0.79	0.49	0.57	0.65	0.71	0.35	0.42	0.49	0.56
		PI	2.71	2.71	2.71	2.71	2.71	2.71	2.71	2.71	2.71	2.71	2.70	2.71	2.72	2.72	2.72	2.72
	5	TC	38473	38473	38473	38885	40497	40497	40497	40497	41439	41439	41439	41439	44069	44069	44069	44069
		S/T	0.70	0.77	0.98	1.00	0.56	0.64	0.71	0.79	0.49	0.57	0.65	0.71	0.35	0.42	0.49	0.56
		PI	2.54	2.54	2.54	2.54	2.54	2.54	2.54	2.54	2.53	2.53	2.53	2.53	2.53	2.53	2.53	2.53
	14	TC	38245	38245	38245	38654	40270	40270	40270	40270	41231	41231	41231	41231	43920	43920	43920	43920
		S/T	0.70	0.78	0.99	1.00	0.56	0.64	0.72	0.80	0.49	0.57	0.65	0.72	0.35	0.43	0.49	0.56
		PI	2.53	2.53	2.53	2.53	2.53	2.53	2.53	2.53	2.53	2.53	2.53	2.53	2.53	2.53	2.53	2.53
	23	TC	38017	38017	38017	38424	40118	40118	40118	40118	41080	41080	41080	41080	43808	43808	43808	43808
		S/T	0.70	0.78	0.99	1.00	0.57	0.64	0.72	0.80	0.50	0.58	0.65	0.72	0.35	0.43	0.50	0.57
		PI	2.53	2.53	2.53	2.53	2.53	2.53	2.53	2.53	2.53	2.53	2.53	2.53	2.54	2.54	2.54	2.54
	32	TC	37827	37827	37827	38232	39967	39967	39967	39967	40967	40967	40967	40967	43771	43771	43771	43771
		S/T	0.71	0.78	1.00	1.00	0.57	0.65	0.73	0.80	0.50	0.58	0.66	0.73	0.35	0.43	0.50	0.57
		PI	2.54	2.54	2.54	2.54	2.54	2.54	2.54	2.54	2.54	2.54	2.54	2.54	2.54	2.54	2.54	2.54
	41	TC	37637	37637	37637	38040	39815	39815	39815	39815	40834	40834	40834	40834	43734	43734	43734	43734
		S/T	0.71	0.79	1.00	1.00	0.57	0.65	0.73	0.81	0.50	0.58	0.66	0.73	0.35	0.43	0.50	0.57
		PI	2.56	2.56	2.56	2.56	2.56	2.56	2.56	2.56	2.56	2.56	2.56	2.56	2.56	2.56	2.56	2.56
	50	TC	37409	37409	37409	37809	39625	39625	39625	39625	40664	40664	40664	40664	43622	43622	43622	43622
		S/T	0.71	0.79	1.00	1.00	0.57	0.65	0.73	0.81	0.50	0.58	0.66	0.73	0.36	0.44	0.50	0.57
		PI	2.60	2.60	2.60	2.60	2.60	2.60	2.60	2.60	2.60	2.60	2.60	2.60	2.60	2.60	2.60	2.60
	59	TC	37105	37105	37105	37502	39360	39360	39360	39360	40419	40419	40419	40419	43436	43436	43436	43436
		S/T	0.72	0.80	0.88	0.96	0.58	0.66	0.74	0.82	0.51	0.59	0.67	0.74	0.36	0.44	0.51	0.58
		PI	2.67	2.67	2.67	2.67	2.66	2.66	2.66	2.66	2.65	2.65	2.65	2.65	2.65	2.65	2.65	2.65
	68	TC	36687	36687	36687	37079	38943	38943	38943	38943	40022	40022	40022	40022	43063	43063	43063	43063
		S/T	0.72	0.80	0.88	0.96	0.58	0.66	0.74	0.82	0.51	0.59	0.67	0.74	0.36	0.44	0.51	0.58
		PI	2.76	2.76	2.76	2.76	2.75	2.75	2.75	2.75	2.74	2.74	2.74	2.74	2.73	2.73	2.73	2.73
	77	TC	35019	35019	35411	35804	37177	37177	37177	37177	38256	38256	38256	38256	41199	41199	41199	41199
		S/T	0.72	0.81	0.90	0.98	0.58	0.66	0.75	0.83	0.51	0.60	0.68	0.76	0.36	0.44	0.51	0.59
		PI	3.05	3.05	3.05	3.05	3.05	3.05	3.05	3.05	3.05	3.05	3.05	3.05	3.05	3.05	3.05	3.05
	86	TC	33351	33351	33646	33940	35510	35510	35510	35510	36589	36589	36589	36589	39335	39335	39335	39335
		S/T	0.73	0.83	0.92	1.00	0.59	0.67	0.76	0.85	0.52	0.60	0.69	0.77	0.36	0.44	0.51	0.59
		PI	3.34	3.34	3.34	3.34	3.34	3.34	3.34	3.34	3.35	3.35	3.35	3.35	3.36	3.36	3.36	3.36
	95	TC	31684	31684	31978	32272	33744	33744	33744	33744	34725	34725	35313	34725	37471	37471	37471	37471
		S/T	0.74	0.84	0.94	1.00	0.59	0.68	0.77	0.87	0.52	0.61	0.69	0.79	0.35	0.44	0.52	0.60
		PI	3.64	3.64	3.64	3.64	3.66	3.66	3.66	3.66	3.66	3.66	3.67	3.66	3.66	3.66	3.66	3.66
	104	TC	29578	29710	30002	30293	31530	31530	31530	31663	32458	32458	32776	32458	35090	35090	35090	35090
		S/T	0.77	0.87	0.98	1.00	0.60	0.70	0.80	0.90	0.52	0.62	0.72	0.82	0.35	0.44	0.53	0.62
		PI	4.02	4.02	4.02	4.02	4.04	4.04	4.04	4.04	4.04	4.04	4.05	4.04	4.06	4.06	4.06	4.06
	115	TC	27404	27696	27987	28279	29251	29251	29251	29542	30125	30125	30125	30125	32652	32652	32652	32652
		S/T	0.78	0.89	0.99	1.00	0.61	0.71	0.82	0.92	0.53	0.63	0.73	0.83	0.35	0.44	0.53	0.63
		PI	4.47	4.47	4.47	4.47	4.49	4.49	4.49	4.49	4.50	4.50	4.50	4.50	4.54	4.54	4.54	4.54
	122	TC	25655	25947	26238	26530	27502	27502	27502	27793	28376	28376	28376	28376	30806	30806	30806	30806
		S/T	0.80	0.91	1.00	1.00	0.62	0.73	0.84	0.94	0.53	0.64	0.75	0.86	0.34	0.44	0.54	0.91
		PI	4.84	4.84	4.84	4.84	4.86	4.86	4.86	4.86	4.87	4.87	4.87	4.87	4.91	4.91	4.91	4.91

COOLING PERFORMANCE - 36K (Sheet 3 of 4)

AIRFLOW (CFM)	OUTDOOR (DB F)	ID (WB F)	60.8				64.4				66.2				71.6			
		ID (DB F)	73.4	77.0	80.6	84.2	73.4	77.0	80.6	84.2	73.4	77.0	80.6	84.2	73.4	77.0	80.6	84.2
1083	-22	TC	39848	40266	40685	41103	41721	41721	41721	42134	42706	42706	42706	42706	45153	45153	45153	45153
		S/T	0.73	0.84	1.00	1.00	0.58	0.68	0.77	0.96	0.50	0.60	0.69	0.79	0.33	0.42	0.50	0.60
		PI	3.16	3.16	3.16	3.16	3.17	3.17	3.17	3.17	3.17	3.17	3.17	3.17	3.20	3.20	3.20	3.20
	-10	TC	39554	39969	40384	40800	41484	41484	41484	41895	42493	42493	42493	42493	45017	45017	45017	45017
		S/T	0.74	0.84	1.00	1.00	0.58	0.68	0.78	0.97	0.51	0.60	0.70	0.79	0.34	0.42	0.51	0.60
		PI	2.86	2.86	2.86	2.86	2.86	2.86	2.86	2.86	2.86	2.86	2.86	2.86	2.88	2.88	2.88	2.88
	0	TC	39308	39721	40134	40547	41287	41287	41287	41696	42315	42315	42315	42315	44903	44903	44903	44903
		S/T	0.74	0.85	1.00	1.00	0.59	0.68	0.78	0.97	0.51	0.61	0.70	0.80	0.34	0.42	0.51	0.61
		PI	2.77	2.77	2.77	2.77	2.77	2.77	2.77	2.77	2.77	2.77	2.76	2.77	2.78	2.78	2.78	2.78
	5	TC	39194	39605	40017	40428	41212	41212	41212	41620	42252	42252	42252	42252	44872	44872	44872	44872
		S/T	0.74	0.85	1.00	1.00	0.59	0.69	0.78	0.98	0.51	0.61	0.70	0.80	0.34	0.42	0.51	0.61
		PI	2.60	2.60	2.60	2.60	2.59	2.59	2.59	2.59	2.59	2.59	2.59	2.59	2.58	2.58	2.58	2.58
	14	TC	38961	39370	39779	40188	40980	40980	40980	41386	42040	42040	42040	42040	44721	44721	44721	44721
		S/T	0.75	0.85	1.00	1.00	0.59	0.69	0.79	0.98	0.51	0.61	0.71	0.81	0.34	0.43	0.51	0.61
		PI	2.59	2.59	2.59	2.59	2.59	2.59	2.59	2.59	2.58	2.58	2.58	2.58	2.59	2.59	2.59	2.59
	23	TC	38729	39135	39542	39949	40826	40826	40826	41230	41885	41885	41885	41885	44607	44607	44607	44607
		S/T	0.75	0.86	1.00	1.00	0.59	0.69	0.79	0.99	0.52	0.61	0.71	0.81	0.34	0.43	0.52	0.61
		PI	2.58	2.58	2.58	2.58	2.58	2.58	2.58	2.58	2.58	2.58	2.58	2.58	2.59	2.59	2.59	2.59
	32	TC	38535	38940	39344	39749	40671	40671	40671	41074	41770	41770	41770	41770	44569	44569	44569	44569
		S/T	0.75	0.86	1.00	1.00	0.60	0.70	0.79	0.99	0.52	0.62	0.72	0.81	0.34	0.43	0.52	0.62
		PI	2.59	2.59	2.59	2.59	2.59	2.59	2.59	2.59	2.59	2.59	2.59	2.59	2.60	2.60	2.60	2.60
	41	TC	38342	38744	39147	39549	40517	40517	40517	40918	41635	41635	41635	41635	44531	44531	44531	44531
		S/T	0.76	0.87	1.00	1.00	0.60	0.70	0.80	1.00	0.52	0.62	0.72	0.82	0.34	0.43	0.52	0.62
		PI	2.62	2.62	2.62	2.62	2.62	2.62	2.62	2.62	2.61	2.61	2.61	2.61	2.62	2.62	2.62	2.62
	50	TC	38109	38509	38909	39309	40324	40324	40324	40723	41462	41462	41462	41462	44417	44417	44417	44417
		S/T	0.76	0.87	1.00	1.00	0.60	0.70	0.80	1.00	0.52	0.62	0.72	0.82	0.35	0.44	0.52	0.62
		PI	2.66	2.66	2.66	2.66	2.66	2.66	2.66	2.66	2.65	2.65	2.65	2.65	2.65	2.65	2.65	2.65
	59	TC	37799	38196	38593	38990	40054	40054	40054	40450	41211	41211	41211	41211	44227	44227	44227	44227
		S/T	0.77	0.88	0.99	1.00	0.61	0.71	0.81	0.91	0.53	0.63	0.73	0.83	0.35	0.44	0.53	0.63
		PI	2.72	2.72	2.72	2.72	2.72	2.72	2.72	2.72	2.71	2.71	2.71	2.71	2.71	2.71	2.71	2.71
	68	TC	37373	37766	38158	38550	39629	39629	39629	40022	40807	40807	40807	40807	43847	43847	43847	43847
		S/T	0.77	0.88	0.99	1.00	0.61	0.71	0.81	0.91	0.53	0.63	0.73	0.83	0.35	0.44	0.53	0.63
		PI	2.82	2.82	2.82	2.82	2.81	2.81	2.81	2.81	2.80	2.80	2.80	2.80	2.79	2.79	2.79	2.79
	77	TC	35706	36098	36490	36883	37864	37864	37864	38256	39041	39041	39041	39041	41984	41984	41984	41984
		S/T	0.79	0.90	1.00	1.00	0.61	0.72	0.83	0.93	0.53	0.64	0.74	0.85	0.34	0.44	0.54	0.64
		PI	3.11	3.11	3.11	3.11	3.10	3.10	3.10	3.10	3.10	3.10	3.10	3.10	3.11	3.11	3.11	3.11
	86	TC	34038	34332	34725	35117	36196	36196	36196	36589	37275	37275	37275	37275	40120	40120	40120	40120
		S/T	0.80	0.92	1.00	1.00	0.62	0.73	0.85	0.96	0.53	0.64	0.76	0.87	0.34	0.44	0.54	0.65
		PI	3.41	3.41	3.41	3.41	3.41	3.41	3.41	3.41	3.42	3.42	3.42	3.42	3.43	3.43	3.43	3.43
	95	TC	32272	32567	32861	33155	34332	34332	34332	34725	35411	35411	36000	36392	38256	38256	38256	38256
		S/T	0.82	0.94	1.00	1.00	0.63	0.75	0.87	0.98	0.54	0.66	0.77	0.88	0.34	0.44	0.55	0.66
		PI	3.72	3.72	3.72	3.72	3.74	3.74	3.74	3.74	3.74	3.74	3.75	3.74	3.77	3.77	3.77	3.77
	104	TC	30117	30408	30700	30991	32069	32069	32201	32546	33094	33094	33412	33756	35824	35824	35824	35824
		S/T	0.85	0.99	1.00	1.00	0.65	0.78	0.90	1.00	0.55	0.68	0.80	0.93	0.33	0.45	0.57	0.90
		PI	4.11	4.11	4.11	4.11	4.13	4.13	4.13	4.13	4.13	4.13	4.14	4.13	4.16	4.16	4.16	4.16
	115	TC	27890	28182	28473	28765	29737	29737	30028	30320	30708	30708	30708	31000	33332	33332	33332	33332
		S/T	0.87	1.00	1.00	1.00	0.65	0.79	0.92	1.00	0.55	0.69	0.82	0.95	0.33	0.45	0.57	0.92
		PI	4.57	4.57	4.57	4.57	4.59	4.59	4.59	4.59	4.60	4.60	4.60	4.60	4.64	4.64	4.64	4.64
	122	TC	26141	26433	26724	27016	27987	27987	28279	28571	28959	28959	28959	29251	31389	31389	31389	31389
		S/T	0.90	1.00	1.00	1.00	0.67	0.81	0.95	1.00	0.56	0.70	0.84	0.98	0.33	0.46	0.59	0.97
		PI	4.95	4.95	4.95	4.95	4.97	4.97	4.97	4.97	4.98	4.98	4.98	4.98	5.02	5.02	5.02	5.02

Manufacturer reserves the right to change, at any time, specifications and designs without notice and without obligations.

COOLING PERFORMANCE - 36K (Sheet 4 of 4)

AIRFLOW (CFM)	OUTDOOR (DB F)	ID (WB F)	60.8				64.4				66.2				71.6			
		ID (DB F)	73.4	77.0	80.6	84.2	73.4	77.0	80.6	84.2	73.4	77.0	80.6	84.2	73.4	77.0	80.6	84.2
1188	-22	TC	40594	41451	42317	42734	42457	42457	42457	43301	43544	43544	43544	43544	45976	45976	45976	45976
		S/T	0.78	0.92	1.00	1.00	0.61	0.73	0.84	1.00	0.52	0.64	0.76	0.89	0.32	0.42	0.52	0.65
		PI	2.66	2.66	2.66	2.66	2.65	2.65	2.65	2.65	2.63	2.63	2.63	2.63	2.62	2.62	2.62	2.62
	-10	TC	40294	41145	42004	42419	42216	42216	42216	43056	43326	43326	43326	43326	45837	45837	45837	45837
		S/T	0.79	0.93	1.00	1.00	0.61	0.73	0.85	1.00	0.53	0.64	0.76	0.89	0.33	0.42	0.53	0.66
		PI	2.65	2.65	2.65	2.65	2.64	2.64	2.64	2.64	2.64	2.64	2.64	2.64	2.63	2.63	2.63	2.63
	0	TC	40044	40889	41743	42155	42015	42015	42015	42851	43145	43145	43145	43145	45721	45721	45721	45721
		S/T	0.79	0.93	1.00	1.00	0.62	0.74	0.85	1.00	0.53	0.65	0.77	0.90	0.33	0.42	0.53	0.66
		PI	2.65	2.65	2.65	2.65	2.64	2.64	2.64	2.64	2.64	2.64	2.64	2.64	2.64	2.64	2.64	2.64
	5	TC	39927	40770	41621	42032	41938	41938	41938	42773	43080	43080	43080	43080	45690	45690	45690	45690
		S/T	0.80	0.93	1.00	1.00	0.62	0.74	0.86	1.00	0.53	0.65	0.77	0.90	0.33	0.42	0.53	0.66
		PI	2.65	2.65	2.65	2.65	2.65	2.65	2.65	2.65	2.64	2.64	2.64	2.64	2.64	2.64	2.64	2.64
	14	TC	39690	40528	41375	41783	41703	41703	41703	42532	42864	42864	42864	42864	45536	45536	45536	45536
		S/T	0.80	0.94	1.00	1.00	0.62	0.74	0.86	1.00	0.53	0.65	0.77	0.90	0.33	0.43	0.53	0.66
		PI	2.64	2.64	2.64	2.64	2.64	2.64	2.64	2.64	2.64	2.64	2.64	2.64	2.64	2.64	2.64	2.64
	23	TC	39454	40286	41128	41534	41545	41545	41545	42372	42707	42707	42707	42707	45420	45420	45420	45420
		S/T	0.80	0.94	1.00	1.00	0.63	0.74	0.86	1.00	0.54	0.66	0.78	0.91	0.33	0.43	0.54	0.67
		PI	2.64	2.64	2.64	2.64	2.64	2.64	2.64	2.64	2.64	2.64	2.64	2.64	2.65	2.65	2.65	2.65
	32	TC	39256	40085	40922	41326	41388	41388	41388	42212	42589	42589	42589	42589	45381	45381	45381	45381
		S/T	0.81	0.95	1.00	1.00	0.63	0.75	0.87	1.00	0.54	0.66	0.78	0.91	0.33	0.43	0.54	0.67
		PI	2.65	2.65	2.65	2.65	2.65	2.65	2.65	2.65	2.65	2.65	2.65	2.65	2.66	2.66	2.66	2.66
	41	TC	39059	39884	40717	41119	41231	41231	41231	42052	42451	42451	42451	42451	45342	45342	45342	45342
		S/T	0.81	0.95	0.99	0.99	0.63	0.75	0.87	1.00	0.54	0.66	0.78	0.92	0.34	0.43	0.54	0.67
		PI	2.67	2.67	2.67	2.67	2.67	2.67	2.67	2.67	2.67	2.67	2.67	2.67	2.67	2.67	2.67	2.67
	50	TC	38822	39642	40470	40869	41035	41035	41035	41852	42275	42275	42275	42275	45226	45226	45226	45226
		S/T	0.82	0.96	1.00	1.00	0.64	0.76	0.88	1.00	0.55	0.67	0.79	0.92	0.34	0.44	0.55	0.68
		PI	2.72	2.72	2.72	2.72	2.71	2.71	2.71	2.71	2.71	2.71	2.71	2.71	2.71	2.71	2.71	2.71
	59	TC	38507	39320	40141	40537	40760	40760	40760	41571	42019	42019	42019	42019	45033	45033	45033	45033
		S/T	0.82	0.96	1.00	1.00	0.64	0.76	0.88	1.00	0.55	0.67	0.79	0.93	0.34	0.44	0.55	0.68
		PI	2.78	2.78	2.78	2.78	2.78	2.78	2.78	2.78	2.77	2.77	2.77	2.77	2.77	2.77	2.77	2.77
	68	TC	38073	38876	39688	40080	40328	40328	40328	41131	41607	41607	41607	41607	44646	44646	44646	44646
		S/T	0.82	0.97	1.00	1.00	0.64	0.76	0.89	1.00	0.55	0.67	0.80	0.93	0.34	0.44	0.55	0.68
		PI	2.88	2.88	2.88	2.88	2.87	2.87	2.87	2.87	2.86	2.86	2.86	2.86	2.85	2.85	2.85	2.85
	77	TC	36406	37210	37602	37994	38563	38563	38563	39366	39842	39842	39842	39842	42783	42783	42783	42783
		S/T	0.87	1.00	1.00	1.00	0.64	0.79	0.92	1.00	0.55	0.68	0.81	0.95	0.32	0.44	0.57	0.69
		PI	3.18	3.18	3.18	3.18	3.16	3.16	3.16	3.16	3.16	3.16	3.16	3.16	3.18	3.18	3.18	3.18
	86	TC	34739	35342	35838	36335	36896	36896	36896	37700	37975	37975	37975	37975	40920	40920	40920	40920
		S/T	0.88	1.00	1.00	1.00	0.65	0.80	0.95	1.00	0.54	0.68	0.84	0.98	0.32	0.44	0.57	0.72
		PI	3.48	3.48	3.48	3.48	3.48	3.48	3.48	3.48	3.49	3.49	3.49	3.49	3.50	3.50	3.50	3.50
	95	TC	32872	33474	33768	34062	34931	34931	34931	35734	36112	36112	36700	38140	39057	39057	39057	39057
		S/T	0.91	1.00	1.00	1.00	0.67	0.83	0.98	1.00	0.56	0.71	0.86	0.98	0.33	0.44	0.58	0.73
		PI	3.80	3.80	3.80	3.80	3.82	3.82	3.82	3.82	3.82	3.82	3.83	3.82	3.88	3.88	3.88	3.88
	104	TC	30665	31122	31414	31705	32617	32617	32887	33454	33742	33742	34060	35107	36572	36572	36572	36572
		S/T	0.94	1.00	1.00	1.00	0.70	0.87	1.00	1.00	0.58	0.75	0.89	1.00	0.31	0.46	0.61	1.00
		PI	4.20	4.20	4.20	4.20	4.21	4.21	4.21	4.21	4.22	4.22	4.22	4.22	4.27	4.27	4.27	4.27
	115	TC	28385	28676	28968	29259	30231	30231	30826	31118	31303	31303	31303	31900	34027	34027	34027	34027
		S/T	0.97	1.00	1.00	1.00	0.69	0.88	1.00	1.00	0.57	0.76	0.92	1.00	0.31	0.46	0.61	1.00
		PI	4.67	4.67	4.67	4.67	4.69	4.69	4.69	4.69	4.70	4.70	4.70	4.70	4.74	4.74	4.74	4.74
	122	TC	26636	26928	27219	27510	28482	28482	29078	29370	29554	29554	29554	30152	31983	31983	31983	31983
		S/T	1.00	1.00	1.00	1.00	0.72	0.90	1.00	1.00	0.59	0.77	0.94	1.00	0.32	0.48	0.64	1.00
		PI	5.06	5.06	5.06	5.06	5.08	5.08	5.08	5.08	5.09	5.09	5.09	5.09	5.13	5.13	5.13	5.13

LEGEND

TC - Total Cooling Capacity (BTU/hr)
S/T - Sensible Cooling Capacity Ratio
PI - Power Input (kW)

Gray shaded area is Extrapolated Data

HEATING PERFORMANCE AT INDOOR DRY BULB TEMPERATURE- 36K (Sheet 1 of 2)

AIRFLOW (CFM)	OUTDOOR (DB F)	TC: TOTAL CAPACITY IN BTU/HR				PI: TOTAL POWER IN KILOWATTS			
		Indoor Conditions (DB F)				Indoor Conditions (DB F)			
		60.8	68.0	71.6	75.2	60.8	68.0	71.6	75.2
865	-22.0	14970	14722	14660	14537	1.89	1.95	1.98	2.01
	-10.0	17224	16939	16868	16726	2.21	2.28	2.32	2.35
	0.0	19103	18787	18708	18550	2.48	2.56	2.60	2.64
	5.0	20108	19776	19693	19526	2.63	2.71	2.75	2.80
	14.0	21471	21116	21028	20850	2.81	2.89	2.94	2.98
	17.0	22494	22122	22029	21843	2.98	3.07	3.12	3.17
	22.0	24007	23610	23511	23312	2.99	3.09	3.13	3.18
	27.0	25495	25098	24900	24800	3.03	3.13	3.18	3.23
	32.0	26586	26189	25991	25892	3.07	3.17	3.22	3.27
	37.0	28768	28372	28173	27975	3.15	3.25	3.30	3.35
	42.0	32042	31546	31348	31149	3.22	3.32	3.38	3.43
	44.6	35461	34912	33824	33527	3.27	3.43	3.42	3.48
	52.0	37681	37187	36989	36692	3.35	3.46	3.51	3.57
	57.0	39857	39363	39066	38769	3.41	3.52	3.57	3.62
	62.0	42033	41538	41242	40945	3.46	3.58	3.63	3.68
	64.4	43121	42527	42231	41934	3.49	3.60	3.65	3.71
971	-22.0	15183	14998	14874	14812	1.91	1.97	2.00	2.03
	-10.0	17469	17256	17114	17043	2.24	2.30	2.34	2.37
	0.0	19375	19139	18981	18902	2.51	2.58	2.62	2.66
	5.0	20394	20146	19980	19897	2.66	2.74	2.78	2.82
	14.0	21777	21511	21334	21246	2.83	2.92	2.97	3.01
	17.0	22814	22536	22350	22257	3.01	3.10	3.15	3.20
	22.0	24404	24106	23908	23808	3.02	3.12	3.17	3.21
	27.0	25892	25594	25396	25296	3.06	3.16	3.21	3.26
	32.0	27082	26685	26586	26388	3.10	3.20	3.25	3.30
	37.0	29364	28967	28768	28570	3.18	3.28	3.33	3.38
	42.0	32637	32240	31943	31744	3.25	3.36	3.41	3.46
	44.6	36043	35604	34418	34220	3.30	3.46	3.46	3.51
	52.0	38473	37978	37681	37385	3.39	3.50	3.55	3.60
	57.0	40648	40154	39857	39560	3.44	3.56	3.60	3.66
	62.0	42923	42330	42033	41736	3.50	3.61	3.66	3.72
	64.4	44011	43418	43121	42824	3.53	3.64	3.69	3.75

Manufacturer reserves the right to change, at any time, specifications and designs without notice and without obligations.

HEATING PERFORMANCE AT INDOOR DRY BULB TEMPERATURE- 36K (Sheet 2 of 2)

AIRFLOW (CFM)	OUTDOOR (DB F)	TC: TOTAL CAPACITY IN BTU/HR				PI: TOTAL POWER IN KILOWATTS			
		Indoor Conditions (DB F)				Indoor Conditions (DB F)			
		60.8	68.0	71.6	75.2	60.8	68.0	71.6	75.2
1083	-22.0	15303	15118	15057	14933	1.93	1.98	2.01	2.05
	-10.0	17608	17395	17324	17182	2.26	2.32	2.36	2.40
	0.0	19529	19293	19214	19057	2.53	2.61	2.65	2.69
	5.0	20556	20308	20225	20059	2.68	2.76	2.81	2.85
	14.0	21950	21685	21596	21419	2.86	2.95	2.99	3.04
	17.0	22995	22717	22624	22439	3.04	3.13	3.18	3.23
	22.0	24602	24304	24205	24007	3.05	3.15	3.20	3.24
	27.0	26189	25792	25693	25495	3.09	3.19	3.24	3.29
	32.0	27380	26983	26784	26586	3.13	3.23	3.28	3.34
	37.0	29661	29264	29066	28868	3.21	3.31	3.36	3.42
	42.0	33034	32538	32340	32141	3.28	3.39	3.44	3.50
	44.6	36549	36000	34813	34615	3.33	3.50	3.49	3.55
	52.0	38868	38374	38077	37879	3.42	3.53	3.59	3.63
	57.0	41143	40648	40352	40055	3.48	3.59	3.64	3.70
	62.0	43418	42824	42527	42231	3.53	3.64	3.70	3.76
	64.4	44505	43912	43615	43319	3.56	3.67	3.73	3.79
1188	-22.0	15425	15240	15241	15055	1.95	2.00	2.03	2.07
	-10.0	17748	17535	17537	17322	2.28	2.34	2.38	2.42
	0.0	19684	19448	19450	19212	2.56	2.63	2.67	2.71
	5.0	20720	20471	20473	20223	2.71	2.79	2.83	2.88
	14.0	22125	21859	21861	21594	2.89	2.97	3.02	3.07
	17.0	23178	22900	22902	22622	3.07	3.16	3.21	3.26
	22.0	24802	24504	24506	24207	3.08	3.18	3.23	3.27
	27.0	26490	25992	25994	25695	3.12	3.22	3.27	3.32
	32.0	27680	27284	26984	26786	3.16	3.26	3.31	3.38
	37.0	29962	29565	29367	29168	3.24	3.34	3.39	3.46
	42.0	33436	32838	32741	32543	3.31	3.42	3.47	3.54
	44.6	37062	36400	35213	35016	3.36	3.53	3.52	3.59
	52.0	39268	38773	38477	38380	3.45	3.56	3.63	3.66
	57.0	41643	41149	40852	40556	3.52	3.62	3.68	3.74
	62.0	43918	43324	43028	42731	3.56	3.67	3.74	3.80
	64.4	45006	44412	44116	43819	3.59	3.70	3.77	3.83

Gray shaded area is Extrapolated Data

COOLING PERFORMANCE - 36K HH (Sheet 1 of 4)

AIRFLOW (CFM)	OUTDOOR (DB F)	ID (WB F)	60.8				64.4				66.2				71.6			
		ID (DB F)	73.4	77.0	80.6	84.2	73.4	77.0	80.6	84.2	73.4	77.0	80.6	84.2	73.4	77.0	80.6	84.2
865	-22	TC	38348	38369	38788	39206	40157	40998	40998	41411	41048	41048	41048	41048	43420	43420	43420	43420
		S/T	0.70	0.79	0.87	0.95	0.56	0.64	0.72	0.81	0.49	0.57	0.66	0.73	0.34	0.42	0.49	0.57
		PI	2.76	2.76	2.76	2.76	2.76	2.76	2.76	2.76	2.77	2.77	2.77	2.77	2.80	2.80	2.80	2.80
	-10	TC	38065	38086	38501	38916	39929	40765	40765	41176	40843	40843	40843	40843	43288	43288	43288	43288
		S/T	0.71	0.79	0.88	0.96	0.56	0.65	0.73	0.81	0.50	0.57	0.66	0.74	0.34	0.42	0.50	0.57
		PI	2.50	2.50	2.50	2.50	2.50	2.50	2.50	2.50	2.51	2.51	2.51	2.51	2.52	2.52	2.52	2.52
	0	TC	37829	37850	38262	38675	39739	40572	40572	40980	40672	40672	40672	40672	43179	43179	43179	43179
		S/T	0.71	0.80	0.89	0.96	0.57	0.65	0.73	0.82	0.50	0.58	0.66	0.74	0.35	0.42	0.50	0.58
		PI	2.33	2.33	2.33	2.33	2.33	2.33	2.33	2.33	2.34	2.34	2.34	2.34	2.35	2.35	2.35	2.35
	5	TC	37719	37739	38150	38562	39666	40497	40497	40905	40611	40611	40611	40611	43150	43150	43150	43150
		S/T	0.71	0.80	0.89	0.97	0.57	0.65	0.73	0.82	0.50	0.58	0.67	0.74	0.35	0.42	0.50	0.58
		PI	2.19	2.19	2.19	2.19	2.19	2.19	2.19	2.19	2.19	2.19	2.19	2.19	2.18	2.18	2.18	2.18
	14	TC	37495	37515	37924	38333	39444	40270	40270	40676	40407	40407	40407	40407	43004	43004	43004	43004
		S/T	0.72	0.81	0.89	0.97	0.57	0.66	0.74	0.82	0.50	0.58	0.67	0.75	0.35	0.43	0.50	0.58
		PI	2.18	2.18	2.18	2.18	2.18	2.18	2.18	2.18	2.18	2.18	2.18	2.18	2.19	2.19	2.19	2.19
	23	TC	37271	37292	37698	38104	39295	40118	40118	40522	40259	40259	40259	40259	42894	42894	42894	42894
		S/T	0.72	0.81	0.90	0.98	0.58	0.66	0.74	0.83	0.51	0.59	0.67	0.75	0.35	0.43	0.51	0.59
		PI	2.18	2.18	2.18	2.18	2.18	2.18	2.18	2.18	2.18	2.18	2.18	2.18	2.19	2.19	2.19	2.19
	32	TC	37085	37105	37510	37914	39146	39967	39967	40369	40148	40148	40148	40148	42857	42857	42857	42857
		S/T	0.73	0.81	0.90	0.98	0.58	0.66	0.74	0.83	0.51	0.59	0.68	0.75	0.35	0.43	0.51	0.59
		PI	2.19	2.19	2.19	2.19	2.19	2.19	2.19	2.19	2.19	2.19	2.19	2.19	2.20	2.20	2.20	2.20
	41	TC	36899	36919	37321	37723	38998	39815	39815	40216	40019	40019	40019	40019	42821	42821	42821	42821
		S/T	0.73	0.82	0.91	0.99	0.58	0.66	0.75	0.84	0.51	0.59	0.68	0.76	0.35	0.43	0.51	0.59
		PI	2.21	2.21	2.21	2.21	2.20	2.20	2.20	2.20	2.21	2.21	2.21	2.21	2.21	2.21	2.21	2.21
	50	TC	36675	36695	37095	37495	38812	39625	39625	40025	39852	39852	39852	39852	42711	42711	42711	42711
		S/T	0.73	0.82	0.91	0.99	0.58	0.67	0.75	0.84	0.51	0.59	0.68	0.76	0.36	0.44	0.51	0.59
		PI	2.24	2.24	2.24	2.24	2.24	2.24	2.24	2.24	2.24	2.24	2.24	2.24	2.24	2.24	2.24	2.24
	59	TC	36377	36397	36793	37190	38552	39360	39360	39756	39611	39611	39611	39611	42529	42529	42529	42529
		S/T	0.74	0.83	0.92	1.00	0.59	0.67	0.76	0.85	0.52	0.60	0.69	0.77	0.36	0.44	0.52	0.60
		PI	2.30	2.30	2.30	2.30	2.29	2.29	2.29	2.29	2.29	2.29	2.29	2.29	2.29	2.29	2.29	2.29
	68	TC	35967	35986	36379	36771	38144	38144	38144	38144	39222	39222	39222	39222	42164	42164	42164	42164
		S/T	0.74	0.83	0.92	1.00	0.59	0.68	0.76	0.85	0.52	0.60	0.69	0.77	0.36	0.44	0.52	0.60
		PI	2.38	2.38	2.38	2.38	2.37	2.37	2.37	2.37	2.37	2.37	2.37	2.37	2.36	2.36	2.36	2.36
	77	TC	34319	34319	34712	35104	36477	36477	36477	36477	37555	37555	37555	37555	40399	40399	40399	40399
		S/T	0.75	0.84	0.94	1.00	0.59	0.68	0.78	0.87	0.52	0.61	0.70	0.79	0.35	0.44	0.52	0.60
		PI	2.62	2.62	2.62	2.62	2.62	2.62	2.62	2.62	2.62	2.62	2.62	2.62	2.62	2.62	2.62	2.62
	86	TC	32653	32653	32947	33241	34810	34810	34810	35202	35790	35790	35790	35790	38634	38634	38634	38634
		S/T	0.76	0.86	0.96	1.00	0.60	0.69	0.79	0.88	0.52	0.62	0.71	0.80	0.35	0.44	0.52	0.61
		PI	2.87	2.87	2.87	2.87	2.88	2.88	2.88	2.88	2.88	2.88	2.88	2.88	2.89	2.89	2.89	2.89
	95	TC	31084	31084	31378	31672	33045	33045	33045	33339	34123	34123	34614	34123	36771	36771	36771	36771
		S/T	0.77	0.88	0.98	1.00	0.60	0.70	0.81	0.90	0.53	0.62	0.72	0.82	0.35	0.44	0.53	0.62
		PI	3.14	3.14	3.14	3.14	3.15	3.15	3.15	3.15	3.16	3.16	3.16	3.16	3.18	3.18	3.18	3.18
	104	TC	28978	29111	29402	29694	30877	30877	30877	31168	31857	31857	32122	31857	34391	34391	34391	34391
		S/T	0.80	0.91	1.00	1.00	0.62	0.73	0.84	0.95	0.53	0.64	0.75	0.86	0.34	0.44	0.54	0.64
		PI	3.46	3.46	3.46	3.46	3.47	3.47	3.47	3.47	3.48	3.48	3.48	3.48	3.51	3.51	3.51	3.51
	115	TC	26806	27098	27389	27681	28652	28652	28652	28943	29526	29526	29526	29526	31954	31954	31954	31954
		S/T	0.81	0.93	1.00	1.00	0.62	0.74	0.86	0.97	0.54	0.65	0.76	0.88	0.34	0.44	0.55	0.65
		PI	3.85	3.85	3.85	3.85	3.86	3.86	3.86	3.86	3.87	3.87	3.87	3.87	3.91	3.91	3.91	3.91
	122	TC	25155	25447	25738	26029	26904	26904	26904	27195	27778	27778	27778	28069	30109	30109	30109	30109
		S/T	0.83	0.96	1.00	1.00	0.63	0.76	0.88	1.00	0.54	0.66	0.78	0.90	0.33	0.45	0.56	0.67
		PI	4.17	4.17	4.17	4.17	4.18	4.18	4.18	4.18	4.19	4.19	4.19	4.19	4.23	4.23	4.23	4.23

Manufacturer reserves the right to change, at any time, specifications and designs without notice and without obligations.

COOLING PERFORMANCE - 36K HH (Sheet 2 of 4)

AIRFLOW (CFM)	OUTDOOR (DB F)	ID (WB F)	60.8				64.4				66.2				71.6			
		ID (DB F)	73.4	77.0	80.6	84.2	73.4	77.0	80.6	84.2	73.4	77.0	80.6	84.2	73.4	77.0	80.6	84.2
971	-22	TC	39116	39116	39534	39953	40998	40998	40998	41411	41885	41885	41885	41885	44345	44345	44345	44345
		S/T	0.72	0.82	0.97	1.00	0.57	0.66	0.75	0.84	0.49	0.59	0.68	0.77	0.33	0.42	0.50	0.58
		PI	2.76	2.76	2.76	2.76	2.76	2.76	2.76	2.76	2.77	2.77	2.77	2.77	2.80	2.80	2.80	2.80
	-10	TC	38827	38827	39242	39658	40765	40765	40765	41176	41676	41676	41676	41676	44211	44211	44211	44211
		S/T	0.73	0.82	0.97	1.00	0.57	0.66	0.76	0.84	0.50	0.59	0.68	0.78	0.34	0.42	0.51	0.58
		PI	2.50	2.50	2.50	2.50	2.50	2.50	2.50	2.50	2.51	2.51	2.51	2.51	2.52	2.52	2.52	2.52
	0	TC	38586	38586	38999	39412	40572	40572	40572	40980	41502	41502	41502	41502	44099	44099	44099	44099
		S/T	0.73	0.83	0.98	1.00	0.58	0.66	0.76	0.85	0.50	0.60	0.68	0.78	0.34	0.42	0.51	0.59
		PI	2.38	2.38	2.38	2.38	2.38	2.38	2.38	2.38	2.39	2.39	2.39	2.39	2.40	2.40	2.40	2.40
	5	TC	38473	38473	38885	39296	40497	40497	40497	40905	41439	41439	41439	41439	44069	44069	44069	44069
		S/T	0.73	0.83	0.98	1.00	0.58	0.67	0.76	0.85	0.50	0.60	0.69	0.78	0.34	0.42	0.51	0.59
		PI	2.24	2.24	2.24	2.24	2.23	2.23	2.23	2.23	2.23	2.23	2.23	2.23	2.23	2.23	2.23	2.23
	14	TC	38245	38245	38654	39063	40270	40270	40270	40676	41231	41231	41231	41231	43920	43920	43920	43920
		S/T	0.74	0.83	0.99	1.00	0.58	0.67	0.77	0.85	0.50	0.60	0.69	0.79	0.34	0.43	0.51	0.59
		PI	2.23	2.23	2.23	2.23	2.23	2.23	2.23	2.23	2.23	2.23	2.23	2.23	2.23	2.23	2.23	2.23
	23	TC	38017	38017	38424	38830	40118	40118	40118	40522	41080	41080	41080	41080	43808	43808	43808	43808
		S/T	0.74	0.84	0.99	1.00	0.59	0.67	0.77	0.86	0.51	0.60	0.69	0.79	0.34	0.43	0.52	0.59
		PI	2.22	2.22	2.22	2.22	2.22	2.22	2.22	2.22	2.23	2.23	2.23	2.23	2.24	2.24	2.24	2.24
	32	TC	37827	37827	38232	38636	39967	39967	39967	40369	40967	40967	40967	40967	43771	43771	43771	43771
		S/T	0.74	0.84	1.00	1.00	0.59	0.68	0.77	0.86	0.51	0.61	0.70	0.79	0.34	0.43	0.52	0.60
		PI	2.23	2.23	2.23	2.23	2.23	2.23	2.23	2.23	2.24	2.24	2.24	2.24	2.24	2.24	2.24	2.24
	41	TC	37637	37637	38040	38442	39815	39815	39815	40216	40834	40834	40834	40834	43734	43734	43734	43734
		S/T	0.75	0.85	1.00	1.00	0.59	0.68	0.78	0.87	0.51	0.61	0.70	0.80	0.34	0.43	0.52	0.60
		PI	2.25	2.25	2.25	2.25	2.25	2.25	2.25	2.25	2.26	2.26	2.26	2.26	2.26	2.26	2.26	2.26
	50	TC	37409	37409	37809	38209	39625	39625	39625	40025	40664	40664	40664	40664	43622	43622	43622	43622
		S/T	0.75	0.85	1.00	1.00	0.59	0.68	0.78	0.87	0.51	0.61	0.70	0.80	0.35	0.44	0.52	0.60
		PI	2.29	2.29	2.29	2.29	2.29	2.29	2.29	2.29	2.29	2.29	2.29	2.29	2.29	2.29	2.29	2.29
	59	TC	37105	37105	37502	37899	39360	39360	39360	39756	40419	40419	40419	40419	43436	43436	43436	43436
		S/T	0.76	0.86	0.96	1.00	0.60	0.69	0.79	0.88	0.52	0.62	0.71	0.81	0.35	0.44	0.53	0.61
		PI	2.35	2.35	2.35	2.35	2.34	2.34	2.34	2.34	2.34	2.34	2.34	2.34	2.34	2.34	2.34	2.34
	68	TC	36687	36687	37079	37471	38943	38943	38943	39335	40022	40022	40022	40022	43063	43063	43063	43063
		S/T	0.76	0.86	0.96	1.00	0.60	0.69	0.79	0.88	0.52	0.62	0.71	0.81	0.35	0.44	0.53	0.61
		PI	2.43	2.43	2.43	2.43	2.42	2.42	2.42	2.42	2.42	2.42	2.42	2.42	2.41	2.41	2.41	2.41
	77	TC	35019	35019	35411	35804	37177	37177	37177	37569	38256	38256	38256	38256	41199	41199	41199	41199
		S/T	0.77	0.88	0.98	1.00	0.60	0.70	0.81	0.90	0.53	0.62	0.72	0.82	0.35	0.44	0.53	0.62
		PI	2.68	2.68	2.68	2.68	2.67	2.67	2.67	2.67	2.67	2.67	2.67	2.67	2.68	2.68	2.68	2.68
	86	TC	33351	33646	33940	34234	35510	35510	35510	35902	36589	36589	36589	36589	39335	39335	39335	39335
		S/T	0.78	0.89	1.00	1.00	0.61	0.72	0.82	0.92	0.53	0.63	0.73	0.84	0.34	0.44	0.54	0.63
		PI	2.94	2.94	2.94	2.94	2.94	2.94	2.94	2.94	2.95	2.95	2.95	2.95	2.96	2.96	2.96	2.96
	95	TC	31684	31978	32272	32567	33744	33744	33744	34038	34725	34725	35313	34725	37471	37471	37471	37471
		S/T	0.80	0.91	1.00	1.00	0.62	0.73	0.84	0.95	0.53	0.64	0.75	0.86	0.34	0.44	0.54	0.64
		PI	3.21	3.21	3.21	3.21	3.22	3.22	3.22	3.22	3.23	3.23	3.23	3.23	3.23	3.23	3.23	3.23
	104	TC	29864	30158	30453	30747	31835	31835	31969	32263	32772	32772	33093	32906	35430	35430	35430	35430
		S/T	0.83	0.95	1.00	1.00	0.63	0.76	0.88	1.00	0.54	0.66	0.78	0.90	0.34	0.45	0.56	0.67
		PI	3.54	3.54	3.54	3.54	3.55	3.55	3.55	3.55	3.56	3.56	3.56	3.56	3.58	3.58	3.58	3.58
	115	TC	27670	27964	28258	28553	29534	29534	29828	30123	30417	30417	30417	30711	32968	32968	32968	32968
		S/T	0.84	0.97	1.00	1.00	0.64	0.77	0.89	1.00	0.55	0.67	0.80	0.92	0.33	0.45	0.56	0.68
		PI	3.93	3.93	3.93	3.93	3.95	3.95	3.95	3.95	3.96	3.96	3.96	3.96	3.99	3.99	3.99	3.99
	122	TC	25903	26198	26492	26787	27768	27768	28062	28356	28651	28651	28651	28945	31104	31104	31104	31104
		S/T	0.87	1.00	1.00	1.00	0.65	0.79	0.92	1.00	0.55	0.69	0.82	0.94	0.33	0.45	0.57	0.91
		PI	4.27	4.27	4.27	4.27	4.28	4.28	4.28	4.28	4.29	4.29	4.29	4.29	4.32	4.32	4.32	4.32

Manufacturer reserves the right to change, at any time, specifications and designs without notice and without obligations.

COOLING PERFORMANCE - 36K HH (Sheet 3 of 4)

AIRFLOW (CFM)	OUTDOOR (DB F)	ID (WB F)	60.8				64.4				66.2				71.6			
		ID (DB F)	73.4	77.0	80.6	84.2	73.4	77.0	80.6	84.2	73.4	77.0	80.6	84.2	73.4	77.0	80.6	84.2
1083	-22	TC	39848	40266	40685	41103	41721	41721	41721	42134	42706	42706	42706	42706	45153	45153	45153	45153
		S/T	0.74	0.85	1.00	1.00	0.58	0.68	0.78	0.96	0.50	0.60	0.69	0.80	0.32	0.42	0.51	0.60
		PI	2.76	2.76	2.76	2.76	2.76	2.76	2.76	2.76	2.77	2.77	2.77	2.77	2.80	2.80	2.80	2.80
	-10	TC	39554	39969	40384	40800	41484	41484	41484	41895	42493	42493	42493	42493	45017	45017	45017	45017
		S/T	0.75	0.85	1.00	1.00	0.58	0.68	0.79	0.97	0.51	0.60	0.70	0.80	0.33	0.42	0.52	0.60
		PI	2.50	2.50	2.50	2.50	2.50	2.50	2.50	2.50	2.51	2.51	2.51	2.51	2.52	2.52	2.52	2.52
	0	TC	39308	39721	40134	40547	41287	41287	41287	41696	42315	42315	42315	42315	44903	44903	44903	44903
		S/T	0.75	0.86	1.00	1.00	0.59	0.68	0.79	0.97	0.51	0.61	0.70	0.81	0.33	0.42	0.52	0.61
		PI	2.44	2.44	2.44	2.44	2.44	2.44	2.44	2.44	2.44	2.44	2.44	2.44	2.44	2.44	2.44	2.44
	5	TC	39194	39605	40017	40428	41212	41212	41212	41620	42252	42252	42252	42252	44872	44872	44872	44872
		S/T	0.75	0.86	1.00	1.00	0.59	0.69	0.79	0.98	0.51	0.61	0.70	0.81	0.33	0.42	0.52	0.61
		PI	2.29	2.29	2.29	2.29	2.29	2.29	2.29	2.29	2.28	2.28	2.28	2.28	2.28	2.28	2.28	2.28
	14	TC	38961	39370	39779	40188	40980	40980	40980	41386	42040	42040	42040	42040	44721	44721	44721	44721
		S/T	0.76	0.86	1.00	1.00	0.59	0.69	0.80	0.98	0.51	0.61	0.71	0.82	0.33	0.43	0.52	0.61
		PI	2.28	2.28	2.28	2.28	2.28	2.28	2.28	2.28	2.27	2.27	2.27	2.27	2.28	2.28	2.28	2.28
	23	TC	38729	39135	39542	39949	40826	40826	40826	41230	41885	41885	41885	41885	44607	44607	44607	44607
		S/T	0.76	0.87	1.00	1.00	0.59	0.69	0.80	0.99	0.52	0.61	0.71	0.82	0.33	0.43	0.53	0.61
		PI	2.28	2.28	2.28	2.28	2.28	2.28	2.28	2.28	2.27	2.27	2.27	2.27	2.28	2.28	2.28	2.28
	32	TC	38535	38940	39344	39749	40671	40671	40671	41074	41770	41770	41770	41770	44569	44569	44569	44569
		S/T	0.76	0.87	1.00	1.00	0.60	0.70	0.80	0.99	0.52	0.62	0.72	0.82	0.33	0.43	0.53	0.62
		PI	2.29	2.29	2.29	2.29	2.29	2.29	2.29	2.29	2.28	2.28	2.28	2.28	2.29	2.29	2.29	2.29
	41	TC	38342	38744	39147	39549	40517	40517	40517	40918	41635	41635	41635	41635	44531	44531	44531	44531
		S/T	0.77	0.88	1.00	1.00	0.60	0.70	0.81	1.00	0.52	0.62	0.72	0.83	0.33	0.43	0.53	0.62
		PI	2.31	2.31	2.31	2.31	2.31	2.31	2.31	2.31	2.30	2.30	2.30	2.30	2.31	2.31	2.31	2.31
	50	TC	38109	38509	38909	39309	40324	40324	40324	40723	41462	41462	41462	41462	44417	44417	44417	44417
		S/T	0.77	0.88	1.00	1.00	0.60	0.70	0.81	1.00	0.52	0.62	0.72	0.83	0.34	0.44	0.53	0.62
		PI	2.35	2.35	2.35	2.35	2.34	2.34	2.34	2.34	2.34	2.34	2.34	2.34	2.34	2.34	2.34	2.34
	59	TC	37799	38196	38593	38990	40054	40054	40054	40450	41211	41211	41211	41211	44227	44227	44227	44227
		S/T	0.78	0.89	1.00	1.00	0.61	0.71	0.82	0.92	0.53	0.63	0.73	0.84	0.34	0.44	0.54	0.63
		PI	2.40	2.40	2.40	2.40	2.40	2.40	2.40	2.40	2.39	2.39	2.39	2.39	2.39	2.39	2.39	2.39
	68	TC	37373	37766	38158	38550	39629	39629	39629	40022	40807	40807	40807	40807	43847	43847	43847	43847
		S/T	0.78	0.89	1.00	1.00	0.61	0.71	0.82	0.92	0.53	0.63	0.73	0.84	0.34	0.44	0.54	0.63
		PI	2.49	2.49	2.49	2.49	2.48	2.48	2.48	2.48	2.47	2.47	2.47	2.47	2.46	2.46	2.46	2.46
	77	TC	35706	36098	36490	36883	37864	37864	37864	38256	39041	39041	39041	39041	41984	41984	41984	41984
		S/T	0.79	0.91	1.00	1.00	0.62	0.73	0.84	0.94	0.53	0.64	0.75	0.86	0.34	0.44	0.54	0.64
		PI	2.73	2.73	2.73	2.73	2.73	2.73	2.73	2.73	2.73	2.73	2.73	2.73	2.73	2.73	2.73	2.73
	86	TC	34038	34332	34725	35117	36196	36196	36196	36589	37275	37275	37275	37275	40120	40120	40120	40120
		S/T	0.81	0.93	1.00	1.00	0.62	0.74	0.86	0.97	0.54	0.65	0.76	0.88	0.34	0.44	0.55	0.65
		PI	3.00	3.00	3.00	3.00	3.01	3.01	3.01	3.01	3.01	3.01	3.01	3.01	3.02	3.02	3.02	3.02
	95	TC	32272	32567	32861	33155	34332	34332	34332	34725	35411	35411	36000	36392	38256	38256	38256	38256
		S/T	0.83	0.95	1.00	1.00	0.63	0.75	0.88	0.99	0.54	0.66	0.77	0.89	0.34	0.45	0.56	0.67
		PI	3.28	3.28	3.28	3.28	3.29	3.29	3.29	3.29	3.30	3.30	3.30	3.30	3.32	3.32	3.32	3.32
	104	TC	30408	30702	30997	31291	32379	32379	32513	32861	33414	33414	33735	34083	36170	36170	36170	36170
		S/T	0.86	1.00	1.00	1.00	0.65	0.78	0.91	1.00	0.55	0.68	0.81	0.94	0.33	0.45	0.57	0.90
		PI	3.62	3.62	3.62	3.62	3.63	3.63	3.63	3.63	3.64	3.64	3.64	3.64	3.66	3.66	3.66	3.66
	115	TC	28160	28455	28749	29043	30024	30024	30319	30613	31006	31006	31006	31300	33655	33655	33655	33655
		S/T	0.88	1.00	1.00	1.00	0.66	0.80	0.93	1.00	0.56	0.69	0.83	0.96	0.33	0.45	0.58	0.92
		PI	4.02	4.02	4.02	4.02	4.04	4.04	4.04	4.04	4.05	4.05	4.05	4.05	4.08	4.08	4.08	4.08
	122	TC	26394	26688	26983	27277	28258	28258	28553	28847	29239	29239	29239	29534	31692	31692	31692	31692
		S/T	0.91	1.00	1.00	1.00	0.67	0.82	0.97	1.00	0.57	0.71	0.85	0.99	0.32	0.46	0.59	0.97
		PI	4.35	4.35	4.35	4.35	4.37	4.37	4.37	4.37	4.38	4.38	4.38	4.38	4.41	4.41	4.41	4.41

Manufacturer reserves the right to change, at any time, specifications and designs without notice and without obligations.

COOLING PERFORMANCE - 36K HH (Sheet 4 of 4)

AIRFLOW (CFM)	OUTDOOR (DB F)	ID (WB F)	60.8				64.4				66.2				71.6			
		ID (DB F)	73.4	77.0	80.6	84.2	73.4	77.0	80.6	84.2	73.4	77.0	80.6	84.2	73.4	77.0	80.6	84.2
1188	-22	TC	40594	41451	41869	42287	42457	42457	42457	42869	43544	43544	43544	43544	45976	45976	45976	45976
		S/T	0.76	0.88	1.00	1.00	0.59	0.69	0.81	1.00	0.51	0.61	0.71	0.83	0.31	0.42	0.52	0.62
		PI	2.35	2.35	2.35	2.35	2.34	2.34	2.34	2.34	2.32	2.32	2.32	2.32	2.31	2.31	2.31	2.31
	-10	TC	40294	41145	41559	41974	42216	42216	42216	42626	43326	43326	43326	43326	45837	45837	45837	45837
		S/T	0.77	0.88	1.00	1.00	0.59	0.70	0.81	1.00	0.52	0.61	0.72	0.83	0.32	0.42	0.53	0.62
		PI	2.35	2.35	2.35	2.35	2.34	2.34	2.34	2.34	2.32	2.32	2.32	2.32	2.31	2.31	2.31	2.31
	0	TC	40044	40889	41302	41714	42015	42015	42015	42424	43145	43145	43145	43145	45721	45721	45721	45721
		S/T	0.77	0.89	1.00	1.00	0.60	0.70	0.82	1.00	0.52	0.62	0.72	0.84	0.32	0.42	0.53	0.63
		PI	2.34	2.34	2.34	2.34	2.34	2.34	2.34	2.34	2.32	2.32	2.32	2.32	2.32	2.32	2.32	2.32
	5	TC	39927	40770	41181	41592	41938	41938	41938	42346	43080	43080	43080	43080	45690	45690	45690	45690
		S/T	0.77	0.89	1.00	1.00	0.60	0.71	0.82	1.00	0.52	0.62	0.72	0.84	0.32	0.42	0.53	0.63
		PI	2.35	2.35	2.35	2.35	2.34	2.34	2.34	2.34	2.32	2.32	2.32	2.32	2.32	2.32	2.32	2.32
	14	TC	39690	40528	40937	41346	41703	41703	41703	42108	42864	42864	42864	42864	45536	45536	45536	45536
		S/T	0.78	0.89	1.00	1.00	0.60	0.71	0.83	1.00	0.52	0.62	0.73	0.85	0.32	0.43	0.53	0.63
		PI	2.34	2.34	2.34	2.34	2.34	2.34	2.34	2.34	2.32	2.32	2.32	2.32	2.33	2.33	2.33	2.33
	23	TC	39454	40286	40693	41099	41545	41545	41545	41950	42707	42707	42707	42707	45420	45420	45420	45420
		S/T	0.78	0.90	1.00	1.00	0.60	0.71	0.83	1.00	0.53	0.62	0.73	0.85	0.32	0.43	0.54	0.63
		PI	2.33	2.33	2.33	2.33	2.33	2.33	2.33	2.33	2.32	2.32	2.32	2.32	2.33	2.33	2.33	2.33
	32	TC	39256	40085	40489	40893	41388	41388	41388	41791	42589	42589	42589	42589	45381	45381	45381	45381
		S/T	0.78	0.90	1.00	1.00	0.61	0.72	0.83	1.00	0.53	0.63	0.74	0.85	0.32	0.43	0.54	0.64
		PI	2.34	2.34	2.34	2.34	2.34	2.34	2.34	2.34	2.33	2.33	2.33	2.33	2.34	2.34	2.34	2.34
	41	TC	39059	39884	40286	40688	41231	41231	41231	41632	42451	42451	42451	42451	45342	45342	45342	45342
		S/T	0.79	0.91	0.99	0.99	0.61	0.72	0.84	1.00	0.53	0.63	0.74	0.86	0.33	0.43	0.54	0.64
		PI	2.36	2.36	2.36	2.36	2.36	2.36	2.36	2.36	2.35	2.35	2.35	2.35	2.35	2.35	2.35	2.35
	50	TC	38822	39642	40042	40441	41035	41035	41035	41434	42275	42275	42275	42275	45226	45226	45226	45226
		S/T	0.79	0.91	1.00	1.00	0.61	0.72	0.84	1.00	0.53	0.63	0.74	0.86	0.33	0.44	0.54	0.64
		PI	2.40	2.40	2.40	2.40	2.40	2.40	2.40	2.40	2.38	2.38	2.38	2.38	2.38	2.38	2.38	2.38
	59	TC	38507	39320	39716	40113	40760	40760	40760	41157	42019	42019	42019	42019	45033	45033	45033	45033
		S/T	0.80	0.92	1.00	1.00	0.62	0.73	0.85	0.96	0.54	0.64	0.75	0.87	0.33	0.44	0.55	0.65
		PI	2.46	2.46	2.46	2.46	2.45	2.45	2.45	2.45	2.44	2.44	2.44	2.44	2.43	2.43	2.43	2.43
	68	TC	38073	38876	39268	39660	40328	40328	40328	40720	41607	41607	41607	41607	44646	44646	44646	44646
		S/T	0.80	0.92	1.00	1.00	0.62	0.73	0.85	0.96	0.54	0.64	0.75	0.87	0.33	0.44	0.55	0.65
		PI	2.55	2.55	2.55	2.55	2.54	2.54	2.54	2.54	2.52	2.52	2.52	2.52	2.51	2.51	2.51	2.51
	77	TC	36406	37210	37602	37994	38563	38563	38563	38955	39842	39842	39842	39842	42783	42783	42783	42783
		S/T	0.81	0.94	1.00	1.00	0.64	0.76	0.87	0.98	0.53	0.66	0.78	0.90	0.33	0.44	0.55	0.66
		PI	2.78	2.78	2.78	2.78	2.79	2.79	2.79	2.79	2.79	2.79	2.79	2.79	2.78	2.78	2.78	2.78
	86	TC	34739	35033	35528	36023	36896	36896	36896	37288	37975	37975	37975	37975	40920	40920	40920	40920
		S/T	0.84	0.97	1.00	1.00	0.63	0.76	0.90	1.00	0.55	0.67	0.79	0.92	0.34	0.44	0.56	0.67
		PI	3.06	3.06	3.06	3.06	3.08	3.08	3.08	3.08	3.07	3.07	3.07	3.07	3.08	3.08	3.08	3.08
	95	TC	32872	33166	33460	33755	34931	34931	34931	35425	36112	36112	36700	38140	39057	39057	39057	39057
		S/T	0.86	0.99	1.00	1.00	0.64	0.77	0.92	1.00	0.55	0.68	0.79	0.92	0.34	0.46	0.58	0.70
		PI	3.35	3.35	3.35	3.35	3.36	3.36	3.36	3.36	3.37	3.37	3.37	3.37	3.41	3.41	3.41	3.41
	104	TC	30962	31256	31551	31845	32933	32933	33066	33470	34069	34069	34390	35303	36926	36926	36926	36926
		S/T	0.89	1.00	1.00	1.00	0.67	0.80	0.94	1.00	0.56	0.70	0.84	0.98	0.32	0.45	0.58	1.00
		PI	3.69	3.69	3.69	3.69	3.71	3.71	3.71	3.71	3.72	3.72	3.72	3.72	3.75	3.75	3.75	3.75
	115	TC	28659	28954	29248	29542	30523	30523	30817	31112	31606	31606	31606	31900	34356	34356	34356	34356
		S/T	0.92	1.00	1.00	1.00	0.68	0.83	0.97	1.00	0.57	0.71	0.86	1.00	0.33	0.45	0.60	1.00
		PI	4.11	4.11	4.11	4.11	4.13	4.13	4.13	4.13	4.14	4.14	4.14	4.14	4.17	4.17	4.17	4.17
	122	TC	26894	27188	27482	27777	28758	28758	29052	29346	29840	29840	29840	30135	32292	32292	32292	32292
		S/T	0.94	1.00	1.00	1.00	0.69	0.85	1.00	1.00	0.59	0.73	0.88	1.00	0.31	0.47	0.61	1.00
		PI	4.44	4.44	4.44	4.44	4.47	4.47	4.47	4.47	4.47	4.47	4.47	4.47	4.50	4.50	4.50	4.50

LEGEND

TC - Total Cooling Capacity (BTU/hr)
S/T - Sensible Cooling Capacity Ratio
PI - Power Input (kW)

Gray shaded area is Extrapolated Data

Manufacturer reserves the right to change, at any time, specifications and designs without notice and without obligations.

HEATING PERFORMANCE AT INDOOR DRY BULB TEMPERATURE- 36K HH (Sheet 1 of 2)

AIRFLOW (CFM)	OUTDOOR (DB F)	HEATING PERFORMANCE AT INDOOR DRY BULB TEMPERATURE							
		TC: TOTAL CAPACITY IN BTU/HR				PI?TOTAL POWER IN KILOWATTS			
		Indoor Conditions (DB F)				Indoor Conditions (DB F)			
		60.8	68.0	71.6	75.2	60.8	68.0	71.6	75.2
865	-22.0	30766	30560	30422	30354	4.12	4.28	4.11	4.10
	-10.0	35399	35162	35004	34925	4.83	5.02	4.81	4.80
	0.0	39261	38998	38823	38735	5.42	5.63	5.40	5.39
	5.0	41326	41050	40865	40773	5.75	5.96	5.72	5.71
	14.0	44128	43833	43636	43537	6.13	6.36	6.10	6.09
	17.0	46229	45920	45713	45610	6.51	6.76	6.48	6.47
	22.0	44336	44039	43842	43743	6.21	6.18	6.16	6.14
	27.0	42456	42060	41862	41763	5.66	5.60	5.57	5.54
	32.0	40180	39784	39586	39388	5.10	5.02	4.98	4.94
	37.0	38992	38596	38398	38102	4.58	4.47	4.42	4.36
	42.0	38992	38596	38300	38102	4.06	3.93	3.86	3.79
	44.6	39210	38812	39307	39010	3.80	3.34	3.58	3.51
	52.0	38317	37822	37525	37228	3.00	2.82	2.73	2.64
	57.0	37228	36634	36337	36040	2.46	2.25	2.15	2.05
	62.0	36040	35446	35149	34752	1.92	1.69	1.58	1.46
	64.4	35446	34851	34554	34257	1.67	1.42	1.30	1.18
971	-22.0	31362	31156	31019	30881	4.16	4.32	4.14	4.14
	-10.0	36085	35848	35691	35533	4.88	5.06	4.85	4.85
	0.0	40022	39759	39584	39409	5.47	5.68	5.45	5.44
	5.0	42127	41850	41666	41482	5.80	6.02	5.77	5.76
	14.0	44983	44688	44491	44294	6.18	6.42	6.16	6.15
	17.0	47125	46816	46610	46403	6.57	6.82	6.54	6.53
	22.0	45227	44930	44732	44534	6.27	6.24	6.22	6.20
	27.0	43347	42951	42753	42555	5.71	5.65	5.62	5.60
	32.0	40972	40576	40378	40081	5.15	5.07	5.03	4.99
	37.0	39784	39388	39091	38893	4.62	4.51	4.46	4.40
	42.0	39784	39388	39091	38893	4.10	3.96	3.90	3.83
	44.6	40002	39604	40099	39802	3.84	3.37	3.62	3.54
	52.0	39109	38515	38317	38020	3.02	2.84	2.76	2.66
	57.0	37921	37327	37030	36733	2.48	2.27	2.17	2.06
	62.0	36832	36139	35842	35545	1.93	1.70	1.59	1.47
	64.4	36238	35545	35248	34950	1.68	1.43	1.31	1.18

Manufacturer reserves the right to change, at any time, specifications and designs without notice and without obligations.

HEATING PERFORMANCE AT INDOOR DRY BULB TEMPERATURE- 36K HH (Sheet 2 of 2)

AIRFLOW (CFM)	HEATING PERFORMANCE AT INDOOR DRY BULB TEMPERATURE								
	OUTDOOR (DB F)	TC: TOTAL CAPACITY IN BTU/HR				PI?TOTAL POWER IN KILOWATTS			
		Indoor Conditions (DB F)				Indoor Conditions (DB F)			
		60.8	68.0	71.6	75.2	60.8	68.0	71.6	75.2
1083	-22.0	31688	31482	31345	31207	4.21	4.37	4.19	4.18
	-10.0	36460	36223	36065	35908	4.93	5.12	4.91	4.90
	0.0	40437	40175	40000	39825	5.53	5.74	5.50	5.50
	5.0	42564	42288	42104	41920	5.86	6.09	5.83	5.82
	14.0	45450	45155	44958	44762	6.25	6.49	6.22	6.21
	17.0	47615	47305	47099	46893	6.64	6.90	6.61	6.60
	22.0	45722	45425	45227	45029	6.33	6.30	6.29	6.27
	27.0	43743	43347	43149	42951	5.77	5.71	5.68	5.65
	32.0	41367	40972	40774	40576	5.20	5.12	5.08	5.04
	37.0	40180	39784	39487	39289	4.67	4.56	4.50	4.45
	42.0	40279	39784	39487	39289	4.14	4.00	3.93	3.86
	44.6	40498	40000	40495	40198	3.87	3.40	3.65	3.58
	52.0	39505	38911	38614	38416	3.05	2.86	2.78	2.68
	57.0	38317	37723	37426	37129	2.50	2.29	2.18	2.08
	62.0	37129	36535	36238	35842	1.95	1.71	1.60	1.48
	64.4	36634	35941	35644	35248	1.69	1.44	1.31	1.18
1188	-22.0	32017	31811	31674	31537	4.25	4.42	4.23	4.23
	-10.0	36839	36602	36444	36287	4.98	5.17	4.96	4.95
	0.0	40857	40595	40420	40245	5.59	5.80	5.56	5.55
	5.0	43007	42730	42546	42362	5.92	6.15	5.89	5.89
	14.0	45922	45627	45431	45234	6.32	6.56	6.29	6.28
	17.0	48109	47800	47594	47388	6.71	6.97	6.68	6.67
	22.0	46222	45925	45727	45529	6.39	6.36	6.36	6.34
	27.0	44142	43746	43548	43350	5.83	5.77	5.74	5.70
	32.0	41767	41371	41173	41077	5.26	5.17	5.13	5.09
	37.0	40580	40184	39887	39689	4.72	4.61	4.54	4.50
	42.0	40780	40184	39887	39689	4.18	4.04	3.96	3.89
	44.6	40999	40400	40895	40598	3.90	3.43	3.68	3.62
	52.0	39905	39311	38913	38816	3.08	2.88	2.80	2.70
	57.0	38717	38123	37826	37529	2.52	2.31	2.19	2.10
	62.0	37428	36935	36638	36141	1.97	1.72	1.61	1.49
	64.4	37034	36341	36044	35547	1.70	1.45	1.31	1.18

Gray shaded area is Extrapolated Data

COOLING PERFORMANCE - 48K (Sheet 1 of 4)

AIRFLOW (CFM)	OUTDOOR (DB F)	ID (WB F)	60.8				64.4				66.2				71.6			
		ID (DB F)	73.4	77.0	80.6	84.2	73.4	77.0	80.6	84.2	73.4	77.0	80.6	84.2	73.4	77.0	80.6	84.2
906	-22	TC	50094	50094	50094	50617	52457	53509	53509	53509	53687	53687	53687	53687	56766	56766	56766	56766
		S/T	0.67	0.73	0.81	0.87	0.54	0.61	0.68	0.74	0.48	0.55	0.62	0.68	0.35	0.42	0.48	0.54
		PI	4.25	4.26	4.26	4.25	4.26	4.26	4.26	4.26	4.27	4.27	4.27	4.27	4.31	4.31	4.31	4.31
	-10	TC	49724	49724	49724	50243	52159	53206	53206	53206	53419	53419	53419	53419	56594	56594	56594	56594
		S/T	0.67	0.74	0.81	0.88	0.55	0.61	0.68	0.75	0.49	0.56	0.62	0.69	0.35	0.42	0.48	0.55
		PI	3.84	3.85	3.85	3.84	3.85	3.85	3.85	3.85	3.85	3.85	3.85	3.85	3.88	3.88	3.88	3.88
	0	TC	49415	49415	49415	49931	51911	52953	52953	52953	53195	53195	53195	53195	56451	56451	56451	56451
		S/T	0.67	0.74	0.82	0.89	0.55	0.62	0.68	0.75	0.49	0.56	0.63	0.69	0.36	0.42	0.48	0.55
		PI	3.59	3.59	3.59	3.59	3.59	3.59	3.59	3.59	3.59	3.59	3.59	3.59	3.60	3.60	3.60	3.60
	5	TC	49271	49271	49271	49785	51816	52856	52856	52856	53115	53115	53115	53115	56412	56412	56412	56412
		S/T	0.68	0.74	0.82	0.89	0.55	0.62	0.69	0.75	0.49	0.56	0.63	0.70	0.36	0.42	0.48	0.55
		PI	3.37	3.37	3.37	3.37	3.36	3.36	3.36	3.36	3.35	3.35	3.35	3.35	3.35	3.35	3.35	3.35
	14	TC	48979	48979	48979	49490	51525	52559	52559	52559	52849	52849	52849	52849	56222	56222	56222	56222
		S/T	0.68	0.75	0.82	0.89	0.55	0.62	0.69	0.76	0.49	0.56	0.63	0.70	0.36	0.43	0.49	0.55
		PI	3.35	3.35	3.35	3.35	3.35	3.35	3.35	3.35	3.35	3.35	3.35	3.35	3.36	3.36	3.36	3.36
	23	TC	48687	48687	48687	49195	51331	52361	52361	52361	52655	52655	52655	52655	56078	56078	56078	56078
		S/T	0.68	0.75	0.83	0.90	0.56	0.63	0.69	0.76	0.50	0.57	0.63	0.70	0.36	0.43	0.49	0.56
		PI	3.35	3.35	3.35	3.35	3.34	3.34	3.34	3.34	3.35	3.35	3.35	3.35	3.36	3.36	3.36	3.36
	32	TC	48443	48443	48443	48949	51137	52163	52163	52163	52510	52510	52510	52510	56031	56031	56031	56031
		S/T	0.69	0.75	0.83	0.90	0.56	0.63	0.70	0.76	0.50	0.57	0.64	0.71	0.36	0.43	0.49	0.56
		PI	3.36	3.36	3.36	3.36	3.36	3.36	3.36	3.36	3.36	3.36	3.36	3.36	3.37	3.37	3.37	3.37
	41	TC	48200	48200	48200	48703	50943	51965	51965	51965	52340	52340	52340	52340	55983	55983	55983	55983
		S/T	0.69	0.76	0.84	0.91	0.56	0.63	0.70	0.77	0.50	0.57	0.64	0.71	0.36	0.43	0.49	0.56
		PI	3.39	3.39	3.39	3.39	3.39	3.39	3.39	3.39	3.39	3.39	3.39	3.39	3.40	3.40	3.40	3.40
	50	TC	47908	47908	47908	48408	50701	51718	51718	51718	52122	52122	52122	52122	55840	55840	55840	55840
		S/T	0.69	0.76	0.84	0.91	0.56	0.64	0.70	0.77	0.50	0.57	0.64	0.71	0.37	0.44	0.50	0.56
		PI	3.45	3.45	3.45	3.45	3.44	3.44	3.44	3.44	3.44	3.44	3.44	3.44	3.44	3.44	3.44	3.44
	59	TC	47518	47518	47518	48014	50361	51371	51371	51371	51807	51807	51807	51807	55601	55601	55601	55601
		S/T	0.70	0.77	0.85	0.92	0.57	0.64	0.71	0.78	0.51	0.58	0.65	0.72	0.37	0.44	0.50	0.57
		PI	3.53	3.54	3.54	3.53	3.52	3.52	3.52	3.52	3.51	3.51	3.51	3.51	3.51	3.51	3.51	3.51
	68	TC	46983	46983	46983	47473	49827	49827	49827	49827	51299	51299	51299	51299	55124	55124	55124	55124
		S/T	0.70	0.77	0.85	0.92	0.57	0.64	0.71	0.78	0.51	0.58	0.65	0.72	0.37	0.44	0.50	0.57
		PI	3.65	3.66	3.66	3.65	3.64	3.64	3.64	3.64	3.63	3.63	3.63	3.63	3.62	3.62	3.62	3.62
	77	TC	44825	44825	44825	45315	47571	47571	47571	47571	49043	49043	49043	49043	52770	52770	52770	52770
		S/T	0.70	0.78	0.86	0.94	0.57	0.65	0.72	0.80	0.51	0.58	0.66	0.73	0.37	0.44	0.50	0.57
		PI	4.02	4.02	4.02	4.02	4.02	4.02	4.02	4.02	4.02	4.02	4.02	4.02	4.02	4.02	4.02	4.02
	86	TC	42667	42667	42667	43059	45413	45413	45413	45413	46787	46787	46787	46787	50416	50416	50416	50416
		S/T	0.71	0.79	0.88	0.96	0.58	0.65	0.73	0.81	0.51	0.59	0.66	0.74	0.37	0.44	0.51	0.58
		PI	4.40	4.40	4.40	4.40	4.41	4.41	4.41	4.41	4.42	4.42	4.42	4.42	4.44	4.44	4.44	4.44
	95	TC	40607	40607	41000	41392	43157	43157	43157	43157	44531	44531	45217	44531	48062	48062	48062	48062
		S/T	0.72	0.81	0.89	0.97	0.58	0.66	0.74	0.82	0.51	0.59	0.67	0.75	0.36	0.44	0.51	0.58
		PI	4.83	4.83	4.83	4.83	4.84	4.84	4.84	4.84	4.85	4.85	4.86	4.85	4.88	4.88	4.88	4.88
	104	TC	38221	38221	38613	39005	40680	40680	40680	40680	41963	41963	42338	41963	45359	45359	45359	45359
		S/T	0.74	0.84	0.93	1.00	0.59	0.68	0.77	0.86	0.52	0.60	0.69	0.78	0.36	0.44	0.52	0.60
		PI	5.33	5.33	5.33	5.33	5.35	5.35	5.35	5.35	5.36	5.36	5.37	5.36	5.40	5.40	5.40	5.40
	115	TC	35387	35387	35779	36171	37740	37740	37740	37740	38916	38916	38916	38916	42151	42151	42151	42151
		S/T	0.75	0.85	0.94	1.00	0.59	0.69	0.78	0.87	0.52	0.61	0.70	0.79	0.35	0.44	0.52	0.60
		PI	5.92	5.92	5.92	5.92	5.95	5.95	5.95	5.95	5.97	5.97	5.97	5.97	6.02	6.02	6.02	6.02
	122	TC	33132	33132	33426	33720	35485	35485	35485	35877	36661	36661	36661	36661	39700	39700	39700	39700
		S/T	0.77	0.87	0.97	1.00	0.60	0.70	0.80	0.89	0.52	0.62	0.72	0.81	0.35	0.44	0.53	0.62
		PI	6.41	6.41	6.41	6.41	6.44	6.44	6.44	6.44	6.46	6.46	6.46	6.46	6.51	6.51	6.51	6.51

Manufacturer reserves the right to change, at any time, specifications and designs without notice and without obligations.

COOLING PERFORMANCE - 48K (Sheet 2 of 4)

AIRFLOW (CFM)	OUTDOOR (DB F)	ID (WB F)	60.8				64.4				66.2				71.6			
		ID (DB F)	73.4	77.0	80.6	84.2	73.4	77.0	80.6	84.2	73.4	77.0	80.6	84.2	73.4	77.0	80.6	84.2
1095	-22	TC	51054	51054	51577	52100	53509	53509	53509	53509	54733	54733	54733	54733	57898	57898	57898	57898
		S/T	0.69	0.77	0.97	1.00	0.55	0.64	0.71	0.79	0.49	0.57	0.65	0.72	0.34	0.42	0.48	0.56
		PI	4.25	4.26	4.26	4.25	4.26	4.26	4.26	4.26	4.27	4.27	4.27	4.27	4.31	4.31	4.31	4.31
	-10	TC	50677	50677	51196	51715	53206	53206	53206	53206	54460	54460	54460	54460	57723	57723	57723	57723
		S/T	0.70	0.78	0.97	1.00	0.56	0.64	0.72	0.79	0.50	0.57	0.65	0.73	0.34	0.42	0.49	0.56
		PI	3.84	3.85	3.85	3.84	3.85	3.85	3.85	3.85	3.85	3.85	3.85	3.85	3.88	3.88	3.88	3.88
	0	TC	50362	50362	50878	51394	52953	52953	52953	52953	54232	54232	54232	54232	57577	57577	57577	57577
		S/T	0.70	0.78	0.98	1.00	0.56	0.65	0.72	0.80	0.50	0.58	0.65	0.73	0.35	0.42	0.49	0.57
		PI	3.65	3.65	3.65	3.65	3.65	3.65	3.65	3.65	3.65	3.65	3.65	3.65	3.67	3.67	3.67	3.67
	5	TC	50215	50215	50730	51244	52856	52856	52856	52856	54150	54150	54150	54150	57538	57538	57538	57538
		S/T	0.70	0.78	0.98	1.00	0.56	0.65	0.72	0.80	0.50	0.58	0.66	0.73	0.35	0.42	0.49	0.57
		PI	3.43	3.43	3.43	3.43	3.42	3.42	3.42	3.42	3.41	3.41	3.41	3.41	3.41	3.41	3.41	3.41
	14	TC	49918	49918	50429	50940	52559	52559	52559	52559	53879	53879	53879	53879	57343	57343	57343	57343
		S/T	0.71	0.79	0.99	1.00	0.56	0.65	0.73	0.81	0.50	0.58	0.66	0.74	0.35	0.43	0.49	0.57
		PI	3.41	3.41	3.41	3.41	3.41	3.41	3.41	3.41	3.40	3.40	3.40	3.40	3.42	3.42	3.42	3.42
	23	TC	49620	49620	50128	50637	52361	52361	52361	52361	53681	53681	53681	53681	57197	57197	57197	57197
		S/T	0.71	0.79	0.99	1.00	0.57	0.65	0.73	0.81	0.51	0.59	0.66	0.74	0.35	0.43	0.50	0.58
		PI	3.41	3.41	3.41	3.41	3.40	3.40	3.40	3.40	3.40	3.40	3.40	3.40	3.42	3.42	3.42	3.42
	32	TC	49372	49372	49878	50383	52163	52163	52163	52163	53533	53533	53533	53533	57148	57148	57148	57148
		S/T	0.72	0.79	1.00	1.00	0.57	0.66	0.74	0.81	0.51	0.59	0.67	0.74	0.35	0.43	0.50	0.58
		PI	3.42	3.42	3.42	3.42	3.42	3.42	3.42	3.42	3.42	3.42	3.42	3.42	3.43	3.43	3.43	3.43
	41	TC	49124	49124	49627	50130	51965	51965	51965	51965	53360	53360	53360	53360	57100	57100	57100	57100
		S/T	0.72	0.80	1.00	1.00	0.57	0.66	0.74	0.82	0.51	0.59	0.67	0.75	0.35	0.43	0.50	0.58
		PI	3.45	3.45	3.45	3.45	3.45	3.45	3.45	3.45	3.45	3.45	3.45	3.45	3.46	3.46	3.46	3.46
	50	TC	48826	48826	49326	49826	51718	51718	51718	51718	53138	53138	53138	53138	56954	56954	56954	56954
		S/T	0.72	0.80	1.00	1.00	0.57	0.66	0.74	0.82	0.51	0.59	0.67	0.75	0.36	0.44	0.50	0.58
		PI	3.51	3.51	3.51	3.51	3.50	3.50	3.50	3.50	3.50	3.50	3.50	3.50	3.50	3.50	3.50	3.50
	59	TC	48429	48429	48925	49421	51371	51371	51371	51371	52817	52817	52817	52817	56710	56710	56710	56710
		S/T	0.73	0.81	0.90	0.98	0.58	0.67	0.75	0.83	0.52	0.60	0.68	0.76	0.36	0.44	0.51	0.59
		PI	3.60	3.60	3.60	3.60	3.58	3.58	3.58	3.58	3.58	3.58	3.58	3.58	3.58	3.58	3.58	3.58
	68	TC	47883	47883	48374	48864	50827	50827	50827	50827	52299	52299	52299	52299	56223	56223	56223	56223
		S/T	0.73	0.81	0.90	0.98	0.58	0.67	0.75	0.83	0.52	0.60	0.68	0.76	0.36	0.44	0.51	0.59
		PI	3.72	3.72	3.72	3.72	3.70	3.70	3.70	3.70	3.69	3.69	3.69	3.69	3.68	3.68	3.68	3.68
	77	TC	45724	45724	46215	46706	48570	48570	48570	48570	50042	50042	50042	50042	53770	53770	53770	53770
		S/T	0.73	0.83	0.92	1.00	0.59	0.67	0.76	0.85	0.52	0.60	0.69	0.77	0.36	0.44	0.52	0.59
		PI	4.10	4.10	4.10	4.10	4.10	4.10	4.10	4.10	4.10	4.10	4.10	4.10	4.10	4.10	4.10	4.10
	86	TC	43566	43566	43958	44351	46313	46313	46313	46313	47687	47687	47687	47687	51415	51415	51415	51415
		S/T	0.75	0.84	0.94	1.00	0.59	0.68	0.77	0.87	0.52	0.61	0.70	0.79	0.35	0.44	0.52	0.60
		PI	4.49	4.49	4.49	4.49	4.50	4.50	4.50	4.50	4.51	4.51	4.51	4.51	4.53	4.53	4.53	4.53
	95	TC	41407	41407	41800	42192	44056	44056	44056	44449	45430	45430	46117	45430	48962	48962	48962	48962
		S/T	0.76	0.86	0.96	1.00	0.60	0.69	0.79	0.88	0.52	0.62	0.71	0.80	0.35	0.44	0.52	0.61
		PI	4.91	4.91	4.91	4.91	4.93	4.93	4.93	4.93	4.94	4.94	4.94	4.94	4.94	4.94	4.94	4.94
	104	TC	38602	38778	39167	39555	41092	41092	41092	41480	42407	42407	42778	42407	45815	45815	45815	45815
		S/T	0.78	0.89	1.00	1.00	0.61	0.71	0.82	0.92	0.53	0.63	0.73	0.84	0.34	0.44	0.53	0.63
		PI	5.41	5.41	5.41	5.41	5.44	5.44	5.44	5.44	5.45	5.45	5.45	5.45	5.47	5.47	5.47	5.47
	115	TC	35741	36129	36518	36906	38072	38072	38072	38460	39335	39335	39335	39335	42637	42637	42637	42637
		S/T	0.79	0.91	1.00	1.00	0.61	0.73	0.84	0.94	0.53	0.64	0.75	0.85	0.34	0.44	0.54	0.64
		PI	6.02	6.02	6.02	6.02	6.05	6.05	6.05	6.05	6.06	6.06	6.06	6.06	6.11	6.11	6.11	6.11
	122	TC	33507	33799	34090	34478	35838	35838	35838	36227	37004	37004	37004	37004	40112	40112	40112	40112
		S/T	0.81	0.94	1.00	1.00	0.62	0.74	0.86	0.97	0.54	0.65	0.77	0.88	0.34	0.44	0.55	0.91
		PI	6.52	6.52	6.52	6.52	6.55	6.55	6.55	6.55	6.57	6.57	6.57	6.57	6.62	6.62	6.62	6.62

Manufacturer reserves the right to change, at any time, specifications and designs without notice and without obligations.

COOLING PERFORMANCE - 48K (Sheet 3 of 4)

AIRFLOW (CFM)	OUTDOOR (DB F)	ID (WB F)	60.8				64.4				66.2				71.6			
		ID (DB F)	73.4	77.0	80.6	84.2	73.4	77.0	80.6	84.2	73.4	77.0	80.6	84.2	73.4	77.0	80.6	84.2
1283	-22	TC	52100	52100	52623	53146	54542	54542	54542	55059	55760	55760	55760	55760	59009	59009	59009	59009
		S/T	0.72	0.82	1.00	1.00	0.57	0.66	0.75	0.96	0.49	0.59	0.68	0.76	0.33	0.42	0.49	0.58
		PI	4.25	4.26	4.26	4.25	4.26	4.26	4.26	4.26	4.27	4.27	4.27	4.27	4.31	4.31	4.31	4.31
	-10	TC	51715	51715	52234	52754	54233	54233	54233	54746	55482	55482	55482	55482	58831	58831	58831	58831
		S/T	0.73	0.82	1.00	1.00	0.57	0.66	0.76	0.97	0.50	0.59	0.68	0.77	0.34	0.42	0.50	0.58
		PI	3.84	3.85	3.85	3.84	3.85	3.85	3.85	3.85	3.85	3.85	3.85	3.85	3.88	3.88	3.88	3.88
	0	TC	51394	51394	51910	52426	53975	53975	53975	54486	55250	55250	55250	55250	58682	58682	58682	58682
		S/T	0.73	0.83	1.00	1.00	0.58	0.66	0.76	0.97	0.50	0.60	0.68	0.77	0.34	0.42	0.50	0.59
		PI	3.73	3.73	3.73	3.73	3.72	3.72	3.72	3.72	3.72	3.72	3.72	3.72	3.73	3.73	3.73	3.73
	5	TC	51244	51244	51759	52273	53876	53876	53876	54386	55166	55166	55166	55166	58642	58642	58642	58642
		S/T	0.73	0.83	1.00	1.00	0.58	0.67	0.76	0.98	0.50	0.60	0.69	0.77	0.34	0.42	0.50	0.59
		PI	3.50	3.50	3.50	3.50	3.49	3.49	3.49	3.49	3.48	3.48	3.48	3.48	3.47	3.47	3.47	3.47
	14	TC	50940	50940	51452	51963	53574	53574	53574	54081	54890	54890	54890	54890	58444	58444	58444	58444
		S/T	0.74	0.83	1.00	1.00	0.58	0.67	0.77	0.98	0.50	0.60	0.69	0.78	0.34	0.43	0.50	0.59
		PI	3.49	3.49	3.49	3.49	3.48	3.48	3.48	3.48	3.48	3.48	3.48	3.48	3.48	3.48	3.48	3.48
	23	TC	50637	50637	51145	51653	53372	53372	53372	53877	54688	54688	54688	54688	58295	58295	58295	58295
		S/T	0.74	0.84	1.00	1.00	0.59	0.67	0.77	0.99	0.51	0.60	0.69	0.78	0.34	0.43	0.51	0.59
		PI	3.48	3.48	3.48	3.48	3.48	3.48	3.48	3.48	3.48	3.48	3.48	3.48	3.48	3.48	3.48	3.48
	32	TC	50383	50383	50889	51395	53170	53170	53170	53673	54538	54538	54538	54538	58245	58245	58245	58245
		S/T	0.74	0.84	1.00	1.00	0.59	0.68	0.77	0.99	0.51	0.61	0.70	0.78	0.34	0.43	0.51	0.60
		PI	3.49	3.49	3.49	3.49	3.49	3.49	3.49	3.49	3.49	3.49	3.49	3.49	3.50	3.50	3.50	3.50
	41	TC	50130	50130	50634	51137	52968	52968	52968	53470	54361	54361	54361	54361	58196	58196	58196	58196
		S/T	0.75	0.85	1.00	1.00	0.59	0.68	0.78	1.00	0.51	0.61	0.70	0.79	0.34	0.43	0.51	0.60
		PI	3.53	3.53	3.53	3.53	3.52	3.52	3.52	3.52	3.52	3.52	3.52	3.52	3.52	3.52	3.52	3.52
	50	TC	49826	49826	50327	50827	52716	52716	52716	53215	54135	54135	54135	54135	58047	58047	58047	58047
		S/T	0.75	0.85	1.00	1.00	0.59	0.68	0.78	1.00	0.51	0.61	0.70	0.79	0.35	0.44	0.51	0.60
		PI	3.59	3.59	3.59	3.59	3.57	3.57	3.57	3.57	3.57	3.57	3.57	3.57	3.57	3.57	3.57	3.57
	59	TC	49421	49421	49918	50414	52363	52363	52363	52859	53808	53808	53808	53808	57799	57799	57799	57799
		S/T	0.76	0.86	0.96	1.00	0.60	0.69	0.79	0.88	0.52	0.62	0.71	0.80	0.35	0.44	0.52	0.61
		PI	3.67	3.67	3.67	3.67	3.66	3.66	3.66	3.66	3.65	3.65	3.65	3.65	3.64	3.64	3.64	3.64
	68	TC	48864	48864	49355	49846	51808	51808	51808	52299	53280	53280	53280	53280	57303	57303	57303	57303
		S/T	0.76	0.86	0.96	1.00	0.60	0.69	0.79	0.88	0.52	0.62	0.71	0.80	0.35	0.44	0.52	0.61
		PI	3.80	3.80	3.80	3.80	3.78	3.78	3.78	3.78	3.77	3.77	3.77	3.77	3.75	3.75	3.75	3.75
	77	TC	46608	46608	47098	47589	49453	49453	49453	49944	50925	50925	50925	50925	54850	54850	54850	54850
		S/T	0.77	0.87	0.98	1.00	0.60	0.70	0.80	0.90	0.52	0.62	0.72	0.82	0.35	0.44	0.53	0.62
		PI	4.18	4.18	4.18	4.18	4.18	4.18	4.18	4.18	4.18	4.18	4.18	4.18	4.18	4.18	4.18	4.18
	86	TC	44351	44841	45332	45823	47196	47196	47196	47687	48668	48668	48668	48668	52397	52397	52397	52397
		S/T	0.78	0.89	1.00	1.00	0.61	0.71	0.82	0.92	0.53	0.63	0.73	0.84	0.34	0.44	0.53	0.63
		PI	4.59	4.59	4.59	4.59	4.60	4.60	4.60	4.60	4.60	4.60	4.60	4.60	4.61	4.61	4.61	4.61
	95	TC	42192	42585	42977	43370	44841	44841	44841	45332	46313	46313	47000	46313	49944	49944	49944	49944
		S/T	0.80	0.91	1.00	1.00	0.62	0.73	0.84	0.94	0.53	0.64	0.74	0.86	0.34	0.44	0.54	0.64
		PI	5.01	5.01	5.01	5.01	5.03	5.03	5.03	5.03	5.04	5.04	5.05	5.04	5.08	5.08	5.08	5.08
	104	TC	39335	39723	40112	40500	41869	41869	42045	42487	43237	43237	43608	43414	46698	46698	46698	46698
		S/T	0.83	0.95	1.00	1.00	0.63	0.75	0.88	0.99	0.54	0.66	0.78	0.89	0.34	0.44	0.55	0.90
		PI	5.53	5.53	5.53	5.53	5.55	5.55	5.55	5.55	5.56	5.56	5.56	5.56	5.60	5.60	5.60	5.60
	115	TC	36421	36809	37198	37586	38849	38849	39237	39626	40112	40112	40112	40500	43414	43414	43414	43414
		S/T	0.84	0.97	1.00	1.00	0.64	0.77	0.89	1.00	0.55	0.67	0.79	0.91	0.33	0.45	0.56	0.92
		PI	6.15	6.15	6.15	6.15	6.17	6.17	6.17	6.17	6.19	6.19	6.19	6.19	6.24	6.24	6.24	6.24
	122	TC	34187	34576	34964	35353	36518	36518	36906	37295	37683	37683	37683	38072	40888	40888	40888	40888
		S/T	0.86	1.00	1.00	1.00	0.65	0.79	0.92	1.00	0.55	0.68	0.82	0.94	0.33	0.45	0.57	0.97
		PI	6.66	6.66	6.66	6.66	6.69	6.69	6.69	6.69	6.70	6.70	6.70	6.70	6.76	6.76	6.76	6.76

COOLING PERFORMANCE - 48K (Sheet 4 of 4)

AIRFLOW (CFM)	OUTDOOR (DB F)	ID (WB F)	60.8				64.4				66.2				71.6			
		ID (DB F)	73.4	77.0	80.6	84.2	73.4	77.0	80.6	84.2	73.4	77.0	80.6	84.2	73.4	77.0	80.6	84.2
1470	-22	TC	53168	53168	53690	54213	55595	55595	55595	56653	56806	56806	56806	56806	60142	60142	60142	60142
		S/T	0.75	0.87	1.00	1.00	0.59	0.68	0.79	1.00	0.49	0.61	0.70	0.80	0.32	0.42	0.50	0.60
		PI	3.58	3.58	3.58	3.58	3.56	3.56	3.56	3.56	3.55	3.55	3.55	3.55	3.52	3.52	3.52	3.52
	-10	TC	52775	52775	53294	53813	55280	55280	55280	56332	56523	56523	56523	56523	59960	59960	59960	59960
		S/T	0.76	0.87	1.00	1.00	0.59	0.68	0.80	1.00	0.50	0.61	0.71	0.81	0.33	0.42	0.51	0.60
		PI	3.58	3.58	3.58	3.58	3.56	3.56	3.56	3.56	3.55	3.55	3.55	3.55	3.53	3.53	3.53	3.53
	0	TC	52448	52448	52963	53479	55017	55017	55017	56064	56286	56286	56286	56286	59808	59808	59808	59808
		S/T	0.76	0.88	1.00	1.00	0.60	0.68	0.80	1.00	0.50	0.62	0.71	0.81	0.33	0.42	0.51	0.61
		PI	3.57	3.57	3.57	3.57	3.56	3.56	3.56	3.56	3.55	3.55	3.55	3.55	3.53	3.53	3.53	3.53
	5	TC	52294	52294	52809	53323	54916	54916	54916	55961	56201	56201	56201	56201	59768	59768	59768	59768
		S/T	0.76	0.88	1.00	1.00	0.60	0.69	0.80	1.00	0.50	0.62	0.72	0.81	0.33	0.42	0.51	0.61
		PI	3.58	3.58	3.58	3.58	3.56	3.56	3.56	3.56	3.56	3.56	3.56	3.56	3.54	3.54	3.54	3.54
	14	TC	51984	51984	52495	53007	54608	54608	54608	55647	55920	55920	55920	55920	59566	59566	59566	59566
		S/T	0.77	0.89	1.00	1.00	0.60	0.69	0.81	1.00	0.50	0.62	0.72	0.82	0.33	0.43	0.51	0.61
		PI	3.56	3.56	3.56	3.56	3.55	3.55	3.55	3.55	3.55	3.55	3.55	3.55	3.54	3.54	3.54	3.54
	23	TC	51674	51674	52182	52691	54402	54402	54402	55437	55715	55715	55715	55715	59414	59414	59414	59414
		S/T	0.77	0.89	1.00	1.00	0.61	0.69	0.81	1.00	0.51	0.62	0.72	0.82	0.33	0.43	0.52	0.62
		PI	3.55	3.55	3.55	3.55	3.55	3.55	3.55	3.55	3.55	3.55	3.55	3.55	3.55	3.55	3.55	3.55
	32	TC	51416	51416	51921	52427	54196	54196	54196	55228	55561	55561	55561	55561	59364	59364	59364	59364
		S/T	0.78	0.89	1.00	1.00	0.61	0.70	0.82	1.00	0.51	0.63	0.73	0.83	0.33	0.43	0.52	0.62
		PI	3.57	3.57	3.57	3.57	3.56	3.56	3.56	3.56	3.56	3.56	3.56	3.56	3.56	3.56	3.56	3.56
	41	TC	51157	51157	51661	52164	53991	53991	53991	55018	55381	55381	55381	55381	59313	59313	59313	59313
		S/T	0.78	0.90	0.99	0.99	0.61	0.70	0.82	1.00	0.51	0.63	0.73	0.83	0.34	0.43	0.52	0.62
		PI	3.60	3.60	3.60	3.60	3.59	3.59	3.59	3.59	3.59	3.59	3.59	3.59	3.59	3.59	3.59	3.59
	50	TC	50847	50847	51347	51848	53734	53734	53734	54756	55151	55151	55151	55151	59161	59161	59161	59161
		S/T	0.78	0.90	1.00	1.00	0.61	0.70	0.82	1.00	0.51	0.63	0.73	0.83	0.34	0.44	0.52	0.62
		PI	3.66	3.66	3.66	3.66	3.65	3.65	3.65	3.65	3.65	3.65	3.65	3.65	3.63	3.63	3.63	3.63
	59	TC	50434	50434	50930	51426	53374	53374	53374	54389	54818	54818	54818	54818	58908	58908	58908	58908
		S/T	0.79	0.91	1.00	1.00	0.62	0.71	0.83	0.93	0.52	0.64	0.74	0.84	0.34	0.44	0.53	0.63
		PI	3.75	3.75	3.75	3.75	3.74	3.74	3.74	3.74	3.73	3.73	3.73	3.73	3.71	3.71	3.71	3.71
	68	TC	49866	49866	50356	50846	52808	52808	52808	53813	54279	54279	54279	54279	58403	58403	58403	58403
		S/T	0.79	0.91	1.00	1.00	0.62	0.71	0.83	0.93	0.52	0.64	0.74	0.84	0.34	0.44	0.53	0.63
		PI	3.88	3.88	3.88	3.88	3.86	3.86	3.86	3.86	3.85	3.85	3.85	3.85	3.82	3.82	3.82	3.82
	77	TC	47508	47508	47998	48489	50352	50352	50352	51356	51824	51824	51824	51824	55951	55951	55951	55951
		S/T	0.81	0.91	1.00	1.00	0.61	0.73	0.84	0.95	0.52	0.64	0.75	0.87	0.34	0.44	0.54	0.65
		PI	4.27	4.27	4.27	4.27	4.27	4.27	4.27	4.27	4.27	4.27	4.27	4.27	4.27	4.27	4.27	4.27
	86	TC	45150	46154	46749	47343	48096	48096	48096	49101	49669	49669	49669	49669	53397	53397	53397	53397
		S/T	0.81	0.94	1.00	1.00	0.63	0.74	0.87	0.97	0.54	0.65	0.76	0.89	0.33	0.44	0.54	0.66
		PI	4.69	4.69	4.69	4.69	4.70	4.70	4.70	4.70	4.69	4.69	4.69	4.69	4.70	4.70	4.70	4.70
	95	TC	42992	43795	44188	44580	45640	45640	45640	46233	47213	47213	47900	47213	50945	50945	50945	50945
		S/T	0.84	0.96	1.00	1.00	0.64	0.77	0.89	1.00	0.54	0.66	0.77	0.92	0.33	0.44	0.56	0.67
		PI	5.11	5.11	5.11	5.11	5.13	5.13	5.13	5.13	5.14	5.14	5.15	5.14	5.22	5.22	5.22	5.22
	104	TC	40081	40691	41079	41467	42660	42660	43021	43518	44083	44083	44454	44444	47598	47598	47598	47598
		S/T	0.88	1.00	1.00	1.00	0.65	0.79	0.94	1.00	0.55	0.69	0.83	0.94	0.34	0.44	0.57	1.00
		PI	5.64	5.64	5.64	5.64	5.65	5.65	5.65	5.65	5.67	5.67	5.68	5.67	5.74	5.74	5.74	5.74
	115	TC	37114	37502	37890	38279	39642	39642	40439	40827	40904	40904	40904	41700	44205	44205	44205	44205
		S/T	0.89	1.00	1.00	1.00	0.67	0.81	0.94	1.00	0.57	0.70	0.83	0.97	0.32	0.46	0.58	1.00
		PI	6.28	6.28	6.28	6.28	6.29	6.29	6.29	6.29	6.32	6.32	6.32	6.32	6.37	6.37	6.37	6.37
	122	TC	34881	35370	35861	36249	37211	37211	38007	38395	38376	38376	38376	39171	41681	41681	41681	41681
		S/T	0.92	1.00	1.00	1.00	0.68	0.84	0.98	1.00	0.56	0.71	0.87	1.00	0.32	0.46	0.59	1.00
		PI	6.80	6.80	6.80	6.80	6.83	6.83	6.83	6.83	6.83	6.83	6.83	6.83	6.90	6.90	6.90	6.90

LEGEND

TC - Total Cooling Capacity (BTU/hr)
S/T - Sensible Cooling Capacity Ratio
PI - Power Input (kW)

Gray shaded area is Extrapolated Data

Manufacturer reserves the right to change, at any time, specifications and designs without notice and without obligations.

HEATING PERFORMANCE AT INDOOR DRY BULB TEMPERATURE- 48K (Sheet 1 of 2)

AIRFLOW (CFM)	OUTDOOR (DB F)	TC: TOTAL CAPACITY IN BTU/HR				PI: TOTAL POWER IN KILOWATTS			
		Indoor Conditions (DB F)				Indoor Conditions (DB F)			
		60.8	68.0	71.6	75.2	60.8	68.0	71.6	75.2
906	-22.0	25743	25427	25300	25111	3.24	3.34	3.36	3.40
	-10.0	29620	29257	29111	28893	3.80	3.92	3.94	3.98
	0.0	32851	32448	32286	32044	4.26	4.39	4.42	4.47
	5.0	34580	34155	33985	33730	4.52	4.66	4.68	4.73
	14.0	36924	36470	36289	36017	4.82	4.97	4.99	5.05
	17.0	38682	38207	38017	37732	5.12	5.28	5.31	5.37
	22.0	40286	39791	39593	39296	5.09	5.22	5.28	5.34
	27.0	41771	41276	40979	40781	5.06	5.19	5.25	5.31
	32.0	42760	42166	41968	41672	5.03	5.16	5.22	5.29
	37.0	45334	44740	44443	44146	5.06	5.19	5.25	5.31
	42.0	49491	48897	48501	48204	5.08	5.21	5.27	5.34
	44.6	53966	53318	51933	51637	5.11	5.26	5.29	5.35
	52.0	56781	56088	55692	55297	5.11	5.22	5.29	5.35
	57.0	59353	58561	58165	57770	5.11	5.22	5.28	5.35
	62.0	62023	61133	60737	60243	5.10	5.22	5.28	5.35
	64.4	63210	62320	61924	61430	5.10	5.22	5.28	5.34
1095	-22.0	26267	25951	25824	25697	3.27	3.38	3.39	3.44
	-10.0	30223	29859	29713	29568	3.83	3.96	3.97	4.03
	0.0	33520	33116	32955	32793	4.30	4.44	4.46	4.52
	5.0	35283	34858	34688	34518	4.56	4.70	4.73	4.79
	14.0	37675	37222	37040	36858	4.86	5.02	5.04	5.11
	17.0	39470	38994	38804	38614	5.17	5.33	5.36	5.42
	22.0	41078	40583	40385	40187	5.14	5.27	5.33	5.39
	27.0	42661	42067	41870	41573	5.11	5.24	5.31	5.37
	32.0	43651	43057	42760	42463	5.09	5.21	5.28	5.34
	37.0	46225	45631	45334	45037	5.11	5.24	5.30	5.37
	42.0	50580	49887	49491	49194	5.14	5.26	5.33	5.39
	44.6	55162	54406	53022	52626	5.16	5.32	5.34	5.41
	52.0	57968	57176	56781	56385	5.16	5.28	5.34	5.40
	57.0	60638	59748	59353	58957	5.16	5.27	5.34	5.40
	62.0	63210	62320	61924	61529	5.16	5.27	5.34	5.40
	64.4	64496	63606	63210	62716	5.15	5.27	5.33	5.40
1283	-22.0	26470	26217	26028	25902	3.30	3.41	3.43	3.47
	-10.0	30457	30166	29948	29803	3.87	4.00	4.02	4.06
	0.0	33779	33457	33215	33054	4.34	4.48	4.51	4.56
	5.0	35556	35217	34962	34792	4.60	4.75	4.78	4.83
	14.0	37967	37604	37332	37151	4.91	5.07	5.10	5.15
	17.0	39775	39395	39110	38920	5.22	5.39	5.41	5.47
	22.0	41474	41078	40781	40583	5.20	5.33	5.39	5.44
	27.0	43057	42562	42265	42067	5.17	5.30	5.36	5.42
	32.0	44146	43552	43255	42958	5.14	5.27	5.33	5.39
	37.0	46819	46126	45829	45532	5.16	5.29	5.36	5.41
	42.0	51075	50382	50085	49689	5.19	5.32	5.38	5.44
	44.6	55756	55000	53615	53219	5.21	5.37	5.40	5.46
	52.0	58561	57869	57473	57077	5.20	5.33	5.40	5.46
	57.0	61232	60441	60045	59649	5.20	5.33	5.40	5.46
	62.0	63903	63013	62617	62221	5.20	5.33	5.39	5.46
	64.4	65189	64299	63903	63408	5.20	5.33	5.39	5.46

Manufacturer reserves the right to change, at any time, specifications and designs without notice and without obligations.

HEATING PERFORMANCE AT INDOOR DRY BULB TEMPERATURE- 48K (Sheet 2 of 2)

AIRFLOW (CFM)	OUTDOOR (DB F)	TC: TOTAL CAPACITY IN BTU/HR				PI: TOTAL POWER IN KILOWATTS			
		Indoor Conditions (DB F)				Indoor Conditions (DB F)			
		60.8	68.0	71.6	75.2	60.8	68.0	71.6	75.2
1470	-22.0	26470	26217	26028	25902	3.30	3.41	3.43	3.47
	-10.0	30457	30166	29948	29803	3.87	4.00	4.02	4.06
	0.0	33779	33457	33215	33054	4.34	4.48	4.51	4.56
	5.0	35831	35579	35238	35069	4.65	4.80	4.83	4.87
	14.0	38260	37991	37627	37446	4.96	5.12	5.15	5.20
	17.0	40082	39800	39419	39229	5.27	5.44	5.47	5.52
	22.0	41873	41579	41181	40983	5.26	5.39	5.45	5.49
	27.0	43457	43063	42665	42568	5.23	5.36	5.41	5.48
	32.0	44647	44053	43756	43459	5.19	5.33	5.38	5.45
	37.0	47420	46626	46329	46032	5.21	5.34	5.42	5.46
	42.0	51575	50882	50686	50189	5.24	5.38	5.43	5.50
	44.6	56357	55600	54215	53820	5.27	5.43	5.46	5.51
	52.0	59161	58570	58174	57778	5.25	5.38	5.46	5.52
	57.0	61831	61141	60745	60350	5.25	5.39	5.46	5.52
	62.0	64603	63713	63317	62921	5.25	5.39	5.44	5.52
	64.4	65889	64999	64603	64108	5.26	5.39	5.45	5.52

Gray shaded area is Extrapolated Data

COOLING PERFORMANCE - 48K HH (Sheet 1 of 4)

AIRFLOW (CFM)	OUTDOOR (DB F)	ID (WB F)	60.8				64.4				66.2				71.6			
		ID (DB F)	73.4	77.0	80.6	84.2	73.4	77.0	80.6	84.2	73.4	77.0	80.6	84.2	73.4	77.0	80.6	84.2
906	-22	TC	50094	50094	50094	50617	52457	53509	53509	53509	53687	53687	53687	53687	56766	56766	56766	56766
		S/T	0.67	0.73	0.81	0.87	0.54	0.61	0.68	0.74	0.48	0.55	0.62	0.68	0.35	0.42	0.48	0.54
		PI	4.64	4.64	4.64	4.64	4.65	4.65	4.65	4.65	4.66	4.66	4.65	4.66	4.70	4.70	4.70	4.70
	-10	TC	49724	49724	49724	50243	52159	53206	53206	53206	53419	53419	53419	53419	56594	56594	56594	56594
		S/T	0.67	0.74	0.81	0.88	0.55	0.61	0.68	0.75	0.49	0.56	0.62	0.69	0.35	0.42	0.48	0.55
		PI	4.20	4.20	4.20	4.20	4.20	4.20	4.20	4.20	4.20	4.20	4.20	4.20	4.23	4.23	4.23	4.23
	0	TC	49415	49415	49415	49931	51911	52953	52953	52953	53195	53195	53195	53195	56451	56451	56451	56451
		S/T	0.67	0.74	0.82	0.89	0.55	0.62	0.68	0.75	0.49	0.56	0.63	0.69	0.36	0.42	0.48	0.55
		PI	3.92	3.92	3.92	3.92	3.92	3.92	3.92	3.92	3.92	3.92	3.92	3.92	3.94	3.94	3.94	3.94
	5	TC	49271	49271	49271	49785	51816	52856	52856	52856	53115	53115	53115	53115	56412	56412	56412	56412
		S/T	0.68	0.74	0.82	0.89	0.55	0.62	0.69	0.75	0.49	0.56	0.63	0.70	0.36	0.42	0.48	0.55
		PI	3.68	3.69	3.69	3.68	3.67	3.67	3.67	3.67	3.67	3.67	3.67	3.67	3.67	3.67	3.67	3.67
	14	TC	48979	48979	48979	49490	51525	52559	52559	52559	52849	52849	52849	52849	56222	56222	56222	56222
		S/T	0.68	0.75	0.82	0.89	0.55	0.62	0.69	0.76	0.49	0.56	0.63	0.70	0.36	0.43	0.49	0.55
		PI	3.67	3.67	3.67	3.67	3.66	3.66	3.66	3.66	3.66	3.66	3.66	3.66	3.67	3.67	3.67	3.67
	23	TC	48687	48687	48687	49195	51331	52361	52361	52361	52655	52655	52655	52655	56078	56078	56078	56078
		S/T	0.68	0.75	0.83	0.90	0.56	0.63	0.69	0.76	0.50	0.57	0.63	0.70	0.36	0.43	0.49	0.56
		PI	3.66	3.66	3.66	3.66	3.66	3.66	3.66	3.66	3.66	3.66	3.66	3.66	3.68	3.68	3.68	3.68
	32	TC	48443	48443	48443	48949	51137	52163	52163	52163	52510	52510	52510	52510	56031	56031	56031	56031
		S/T	0.69	0.75	0.83	0.90	0.56	0.63	0.70	0.76	0.50	0.57	0.64	0.71	0.36	0.43	0.49	0.56
		PI	3.68	3.68	3.68	3.68	3.67	3.67	3.67	3.67	3.67	3.67	3.67	3.67	3.69	3.69	3.69	3.69
	41	TC	48200	48200	48200	48703	50943	51965	51965	51965	52340	52340	52340	52340	55983	55983	55983	55983
		S/T	0.69	0.76	0.84	0.91	0.56	0.63	0.70	0.77	0.50	0.57	0.64	0.71	0.36	0.43	0.49	0.56
		PI	3.71	3.71	3.71	3.71	3.70	3.70	3.70	3.70	3.70	3.70	3.70	3.70	3.72	3.72	3.72	3.72
	50	TC	47908	47908	47908	48408	50701	51718	51718	51718	52122	52122	52122	52122	55840	55840	55840	55840
		S/T	0.69	0.76	0.84	0.91	0.56	0.64	0.70	0.77	0.50	0.57	0.64	0.71	0.37	0.44	0.50	0.56
		PI	3.77	3.77	3.77	3.77	3.76	3.76	3.76	3.76	3.76	3.76	3.76	3.76	3.76	3.76	3.76	3.76
	59	TC	47518	47518	47518	48014	50361	51371	51371	51371	51807	51807	51807	51807	55601	55601	55601	55601
		S/T	0.70	0.77	0.85	0.92	0.57	0.64	0.71	0.78	0.51	0.58	0.65	0.72	0.37	0.44	0.50	0.57
		PI	3.86	3.86	3.86	3.86	3.85	3.85	3.85	3.85	3.84	3.84	3.84	3.84	3.84	3.84	3.84	3.84
	68	TC	46983	46983	46983	47473	49827	49827	49827	49827	51299	51299	51299	51299	55124	55124	55124	55124
		S/T	0.70	0.77	0.85	0.92	0.57	0.64	0.71	0.78	0.51	0.58	0.65	0.72	0.37	0.44	0.50	0.57
		PI	4.00	4.00	4.00	4.00	3.98	3.98	3.98	3.98	3.97	3.97	3.97	3.97	3.96	3.96	3.96	3.96
	77	TC	44825	44825	44825	45315	47571	47571	47571	47571	49043	49043	49043	49043	52770	52770	52770	52770
		S/T	0.70	0.78	0.86	0.94	0.57	0.65	0.72	0.80	0.51	0.58	0.66	0.73	0.37	0.44	0.50	0.57
		PI	4.40	4.40	4.40	4.40	4.40	4.40	4.40	4.40	4.40	4.40	4.40	4.40	4.40	4.40	4.40	4.40
	86	TC	42667	42667	42667	43059	45413	45413	45413	45413	46787	46787	46787	46787	50416	50416	50416	50416
		S/T	0.71	0.79	0.88	0.96	0.58	0.65	0.73	0.81	0.51	0.59	0.66	0.74	0.37	0.44	0.51	0.58
		PI	4.82	4.82	4.82	4.82	4.83	4.83	4.83	4.83	4.84	4.84	4.84	4.84	4.86	4.86	4.86	4.86
	95	TC	40607	40607	41000	41392	43157	43157	43157	43157	44531	44531	45217	44531	48062	48062	48062	48062
		S/T	0.72	0.81	0.89	0.97	0.58	0.66	0.74	0.82	0.51	0.59	0.67	0.75	0.36	0.44	0.51	0.58
		PI	5.27	5.27	5.27	5.27	5.29	5.29	5.29	5.29	5.30	5.30	5.31	5.30	5.34	5.34	5.34	5.34
	104	TC	38221	38221	38613	39005	40680	40680	40680	40680	41963	41963	42338	41963	45359	45359	45359	45359
		S/T	0.74	0.84	0.93	1.00	0.59	0.68	0.77	0.86	0.52	0.60	0.69	0.78	0.36	0.44	0.52	0.60
		PI	5.82	5.82	5.82	5.82	5.84	5.84	5.84	5.84	5.85	5.85	5.86	5.85	5.90	5.90	5.90	5.90
	115	TC	35387	35387	35779	36171	37740	37740	37740	37740	38916	38916	38916	38916	42151	42151	42151	42151
		S/T	0.75	0.85	0.94	1.00	0.59	0.69	0.78	0.87	0.52	0.61	0.70	0.79	0.35	0.44	0.52	0.60
		PI	6.47	6.47	6.47	6.47	6.50	6.50	6.50	6.50	6.51	6.51	6.51	6.51	6.57	6.57	6.57	6.57
	122	TC	33132	33132	33426	33720	35485	35485	35485	35877	36661	36661	36661	36661	39700	39700	39700	39700
		S/T	0.77	0.87	0.97	1.00	0.60	0.70	0.80	0.89	0.52	0.62	0.72	0.81	0.35	0.44	0.53	0.62
		PI	7.00	7.00	7.00	7.00	7.03	7.03	7.03	7.03	7.05	7.05	7.05	7.05	7.11	7.11	7.11	7.11

Manufacturer reserves the right to change, at any time, specifications and designs without notice and without obligations.

COOLING PERFORMANCE - 48K HH (Sheet 2 of 4)

AIRFLOW (CFM)	OUTDOOR (DB F)	ID (WB F)	60.8				64.4				66.2				71.6			
		ID (DB F)	73.4	77.0	80.6	84.2	73.4	77.0	80.6	84.2	73.4	77.0	80.6	84.2	73.4	77.0	80.6	84.2
1095	-22	TC	51054	51054	51577	52100	53509	53509	53509	53509	54733	54733	54733	54733	57898	57898	57898	57898
		S/T	0.69	0.77	0.97	1.00	0.55	0.64	0.71	0.79	0.49	0.57	0.65	0.72	0.34	0.42	0.48	0.56
		PI	4.64	4.64	4.64	4.64	4.65	4.65	4.65	4.65	4.66	4.66	4.65	4.66	4.70	4.70	4.70	4.70
	-10	TC	50677	50677	51196	51715	53206	53206	53206	53206	54460	54460	54460	54460	57723	57723	57723	57723
		S/T	0.70	0.78	0.97	1.00	0.56	0.64	0.72	0.79	0.50	0.57	0.65	0.73	0.34	0.42	0.49	0.56
		PI	4.20	4.20	4.20	4.20	4.20	4.20	4.20	4.20	4.20	4.20	4.20	4.20	4.23	4.23	4.23	4.23
	0	TC	50362	50362	50878	51394	52953	52953	52953	52953	54232	54232	54232	54232	57577	57577	57577	57577
		S/T	0.70	0.78	0.98	1.00	0.56	0.65	0.72	0.80	0.50	0.58	0.65	0.73	0.35	0.42	0.49	0.57
		PI	4.00	4.00	4.00	4.00	4.00	4.00	4.00	4.00	4.01	4.01	4.01	4.01	4.02	4.02	4.02	4.02
	5	TC	50215	50215	50730	51244	52856	52856	52856	52856	54150	54150	54150	54150	57538	57538	57538	57538
		S/T	0.70	0.78	0.98	1.00	0.56	0.65	0.72	0.80	0.50	0.58	0.66	0.73	0.35	0.42	0.49	0.57
		PI	3.76	3.76	3.76	3.76	3.74	3.74	3.74	3.74	3.75	3.75	3.75	3.75	3.74	3.74	3.74	3.74
	14	TC	49918	49918	50429	50940	52559	52559	52559	52559	53879	53879	53879	53879	57343	57343	57343	57343
		S/T	0.71	0.79	0.99	1.00	0.56	0.65	0.73	0.81	0.50	0.58	0.66	0.74	0.35	0.43	0.49	0.57
		PI	3.74	3.74	3.74	3.74	3.74	3.74	3.74	3.74	3.74	3.74	3.74	3.74	3.75	3.75	3.75	3.75
	23	TC	49620	49620	50128	50637	52361	52361	52361	52361	53681	53681	53681	53681	57197	57197	57197	57197
		S/T	0.71	0.79	0.99	1.00	0.57	0.65	0.73	0.81	0.51	0.59	0.66	0.74	0.35	0.43	0.50	0.58
		PI	3.73	3.73	3.73	3.73	3.73	3.73	3.73	3.73	3.74	3.74	3.74	3.74	3.75	3.75	3.75	3.75
	32	TC	49372	49372	49878	50383	52163	52163	52163	52163	53533	53533	53533	53533	57148	57148	57148	57148
		S/T	0.72	0.79	1.00	1.00	0.57	0.66	0.74	0.81	0.51	0.59	0.67	0.74	0.35	0.43	0.50	0.58
		PI	3.75	3.75	3.75	3.75	3.74	3.74	3.74	3.74	3.76	3.76	3.76	3.76	3.76	3.76	3.76	3.76
	41	TC	49124	49124	49627	50130	51965	51965	51965	51965	53360	53360	53360	53360	57100	57100	57100	57100
		S/T	0.72	0.80	1.00	1.00	0.57	0.66	0.74	0.82	0.51	0.59	0.67	0.75	0.35	0.43	0.50	0.58
		PI	3.78	3.78	3.78	3.78	3.78	3.78	3.78	3.78	3.79	3.79	3.79	3.79	3.79	3.79	3.79	3.79
	50	TC	48826	48826	49326	49826	51718	51718	51718	51718	53138	53138	53138	53138	56954	56954	56954	56954
		S/T	0.72	0.80	1.00	1.00	0.57	0.66	0.74	0.82	0.51	0.59	0.67	0.75	0.36	0.44	0.50	0.58
		PI	3.85	3.85	3.85	3.85	3.84	3.84	3.84	3.84	3.84	3.84	3.84	3.84	3.84	3.84	3.84	3.84
	59	TC	48429	48429	48925	49421	51371	51371	51371	51371	52817	52817	52817	52817	56710	56710	56710	56710
		S/T	0.73	0.81	0.90	0.98	0.58	0.67	0.75	0.83	0.52	0.60	0.68	0.76	0.36	0.44	0.51	0.59
		PI	3.94	3.94	3.94	3.94	3.93	3.93	3.93	3.93	3.93	3.93	3.93	3.93	3.92	3.92	3.92	3.92
	68	TC	47883	47883	48374	48864	50827	50827	50827	50827	52299	52299	52299	52299	56223	56223	56223	56223
		S/T	0.73	0.81	0.90	0.98	0.58	0.67	0.75	0.83	0.52	0.60	0.68	0.76	0.36	0.44	0.51	0.59
		PI	4.08	4.08	4.08	4.08	4.06	4.06	4.06	4.06	4.06	4.06	4.06	4.06	4.04	4.04	4.04	4.04
	77	TC	45724	45724	46215	46706	48570	48570	48570	48570	50042	50042	50042	50042	53770	53770	53770	53770
		S/T	0.73	0.83	0.92	1.00	0.59	0.67	0.76	0.85	0.52	0.60	0.69	0.77	0.36	0.44	0.52	0.59
		PI	4.50	4.50	4.50	4.50	4.49	4.49	4.49	4.49	4.49	4.49	4.49	4.49	4.50	4.50	4.50	4.50
	86	TC	43566	43566	43958	44351	46313	46313	46313	46313	47687	47687	47687	47687	51415	51415	51415	51415
		S/T	0.75	0.84	0.94	1.00	0.59	0.68	0.77	0.87	0.52	0.61	0.70	0.79	0.35	0.44	0.52	0.60
		PI	4.92	4.92	4.92	4.92	4.93	4.93	4.93	4.93	4.94	4.94	4.94	4.94	4.96	4.96	4.96	4.96
	95	TC	41407	41407	41800	42192	44056	44056	44056	44449	45430	45430	46117	45430	48962	48962	48962	48962
		S/T	0.76	0.86	0.96	1.00	0.60	0.69	0.79	0.88	0.52	0.62	0.71	0.80	0.35	0.44	0.52	0.61
		PI	5.38	5.38	5.38	5.38	5.40	5.40	5.40	5.40	5.41	5.41	5.42	5.41	5.41	5.41	5.41	5.41
	104	TC	38602	38778	39167	39555	41092	41092	41092	41480	42407	42407	42778	42407	45815	45815	45815	45815
		S/T	0.78	0.89	1.00	1.00	0.61	0.71	0.82	0.92	0.53	0.63	0.73	0.84	0.34	0.44	0.53	0.63
		PI	5.94	5.94	5.94	5.94	5.97	5.97	5.97	5.97	5.98	5.98	5.99	5.98	6.01	6.01	6.01	6.01
	115	TC	35741	36129	36518	36906	38072	38072	38072	38460	39335	39335	39335	39335	42637	42637	42637	42637
		S/T	0.79	0.91	1.00	1.00	0.61	0.73	0.84	0.94	0.53	0.64	0.75	0.85	0.34	0.44	0.54	0.64
		PI	6.61	6.61	6.61	6.61	6.64	6.64	6.64	6.64	6.66	6.66	6.66	6.66	6.71	6.71	6.71	6.71
	122	TC	33507	33799	34090	34478	35838	35838	35838	36227	37004	37004	37004	37004	40112	40112	40112	40112
		S/T	0.81	0.94	1.00	1.00	0.62	0.74	0.86	0.97	0.54	0.65	0.77	0.88	0.34	0.44	0.55	0.91
		PI	7.16	7.16	7.16	7.16	7.19	7.19	7.19	7.19	7.21	7.21	7.21	7.21	7.27	7.27	7.27	7.27

Manufacturer reserves the right to change, at any time, specifications and designs without notice and without obligations.

COOLING PERFORMANCE - 48K HH (Sheet 3 of 4)

AIRFLOW (CFM)	OUTDOOR (DB F)	ID (WB F)	60.8				64.4				66.2				71.6			
		ID (DB F)	73.4	77.0	80.6	84.2	73.4	77.0	80.6	84.2	73.4	77.0	80.6	84.2	73.4	77.0	80.6	84.2
1283	-22	TC	52100	52100	52623	53146	54542	54542	54542	55059	55760	55760	55760	55760	59009	59009	59009	59009
		S/T	0.72	0.82	1.00	1.00	0.57	0.66	0.75	0.96	0.49	0.59	0.68	0.76	0.33	0.42	0.49	0.58
		PI	4.64	4.64	4.64	4.64	4.65	4.65	4.65	4.65	4.66	4.66	4.65	4.66	4.70	4.70	4.70	4.70
	-10	TC	51715	51715	52234	52754	54233	54233	54233	54746	55482	55482	55482	55482	58831	58831	58831	58831
		S/T	0.73	0.82	1.00	1.00	0.57	0.66	0.76	0.97	0.50	0.59	0.68	0.77	0.34	0.42	0.50	0.58
		PI	4.20	4.20	4.20	4.20	4.20	4.20	4.20	4.20	4.20	4.20	4.20	4.20	4.23	4.23	4.23	4.23
	0	TC	51394	51394	51910	52426	53975	53975	53975	54486	55250	55250	55250	55250	58682	58682	58682	58682
		S/T	0.73	0.83	1.00	1.00	0.58	0.66	0.76	0.97	0.50	0.60	0.68	0.77	0.34	0.42	0.50	0.59
		PI	4.08	4.08	4.08	4.08	4.09	4.09	4.09	4.09	4.09	4.09	4.09	4.09	4.10	4.10	4.10	4.10
	5	TC	51244	51244	51759	52273	53876	53876	53876	54386	55166	55166	55166	55166	58642	58642	58642	58642
		S/T	0.73	0.83	1.00	1.00	0.58	0.67	0.76	0.98	0.50	0.60	0.69	0.77	0.34	0.42	0.50	0.59
		PI	3.83	3.83	3.83	3.83	3.83	3.83	3.83	3.83	3.82	3.82	3.82	3.82	3.81	3.81	3.81	3.81
	14	TC	50940	50940	51452	51963	53574	53574	53574	54081	54890	54890	54890	54890	58444	58444	58444	58444
		S/T	0.74	0.83	1.00	1.00	0.58	0.67	0.77	0.98	0.50	0.60	0.69	0.78	0.34	0.43	0.50	0.59
		PI	3.81	3.81	3.81	3.81	3.82	3.82	3.82	3.82	3.81	3.81	3.81	3.81	3.82	3.82	3.82	3.82
	23	TC	50637	50637	51145	51653	53372	53372	53372	53877	54688	54688	54688	54688	58295	58295	58295	58295
		S/T	0.74	0.84	1.00	1.00	0.59	0.67	0.77	0.99	0.51	0.60	0.69	0.78	0.34	0.43	0.51	0.59
		PI	3.81	3.81	3.81	3.81	3.81	3.81	3.81	3.81	3.81	3.81	3.81	3.81	3.82	3.82	3.82	3.82
	32	TC	50383	50383	50889	51395	53170	53170	53170	53673	54538	54538	54538	54538	58245	58245	58245	58245
		S/T	0.74	0.84	1.00	1.00	0.59	0.68	0.77	0.99	0.51	0.61	0.70	0.78	0.34	0.43	0.51	0.60
		PI	3.82	3.82	3.82	3.82	3.83	3.83	3.83	3.83	3.83	3.83	3.83	3.83	3.84	3.84	3.84	3.84
	41	TC	50130	50130	50634	51137	52968	52968	52968	53470	54361	54361	54361	54361	58196	58196	58196	58196
		S/T	0.75	0.85	1.00	1.00	0.59	0.68	0.78	1.00	0.51	0.61	0.70	0.79	0.34	0.43	0.51	0.60
		PI	3.86	3.86	3.86	3.86	3.86	3.86	3.86	3.86	3.86	3.86	3.86	3.86	3.86	3.86	3.86	3.86
	50	TC	49826	49826	50327	50827	52716	52716	52716	53215	54135	54135	54135	54135	58047	58047	58047	58047
		S/T	0.75	0.85	1.00	1.00	0.59	0.68	0.78	1.00	0.51	0.61	0.70	0.79	0.35	0.44	0.51	0.60
		PI	3.92	3.92	3.92	3.92	3.92	3.92	3.92	3.92	3.92	3.92	3.92	3.92	3.91	3.91	3.91	3.91
	59	TC	49421	49421	49918	50414	52363	52363	52363	52859	53808	53808	53808	53808	57799	57799	57799	57799
		S/T	0.76	0.86	0.96	1.00	0.60	0.69	0.79	0.88	0.52	0.62	0.71	0.80	0.35	0.44	0.52	0.61
		PI	4.02	4.02	4.02	4.02	4.01	4.01	4.01	4.01	4.01	4.01	4.01	4.01	4.00	4.00	4.00	4.00
	68	TC	48864	48864	49355	49846	51808	51808	51808	52299	53280	53280	53280	53280	57303	57303	57303	57303
		S/T	0.76	0.86	0.96	1.00	0.60	0.69	0.79	0.88	0.52	0.62	0.71	0.80	0.35	0.44	0.52	0.61
		PI	4.16	4.16	4.16	4.16	4.15	4.15	4.15	4.15	4.14	4.14	4.14	4.14	4.12	4.12	4.12	4.12
	77	TC	46608	46608	47098	47589	49453	49453	49453	49944	50925	50925	50925	50925	54850	54850	54850	54850
		S/T	0.77	0.87	0.98	1.00	0.60	0.70	0.80	0.90	0.52	0.62	0.72	0.82	0.35	0.44	0.53	0.62
		PI	4.59	4.59	4.59	4.59	4.58	4.58	4.58	4.58	4.58	4.58	4.58	4.58	4.59	4.59	4.59	4.59
	86	TC	44351	44841	45332	45823	47196	47196	47196	47687	48668	48668	48668	48668	52397	52397	52397	52397
		S/T	0.78	0.89	1.00	1.00	0.61	0.71	0.82	0.92	0.53	0.63	0.73	0.84	0.34	0.44	0.53	0.63
		PI	5.02	5.02	5.02	5.02	5.03	5.03	5.03	5.03	5.04	5.04	5.04	5.04	5.06	5.06	5.06	5.06
	95	TC	42192	42585	42977	43370	44841	44841	44841	45332	46313	46313	47000	46313	49944	49944	49944	49944
		S/T	0.80	0.91	1.00	1.00	0.62	0.73	0.84	0.94	0.53	0.64	0.74	0.86	0.34	0.44	0.54	0.64
		PI	5.49	5.49	5.49	5.49	5.51	5.51	5.51	5.51	5.52	5.52	5.53	5.52	5.56	5.56	5.56	5.56
	104	TC	39335	39723	40112	40500	41869	41869	42045	42487	43237	43237	43608	43414	46698	46698	46698	46698
		S/T	0.83	0.95	1.00	1.00	0.63	0.75	0.88	0.99	0.54	0.66	0.78	0.89	0.34	0.44	0.55	0.90
		PI	6.06	6.06	6.06	6.06	6.09	6.09	6.09	6.09	6.10	6.10	6.10	6.10	6.15	6.15	6.15	6.15
	115	TC	36421	36809	37198	37586	38849	38849	39237	39626	40112	40112	40112	40500	43414	43414	43414	43414
		S/T	0.84	0.97	1.00	1.00	0.64	0.77	0.89	1.00	0.55	0.67	0.79	0.91	0.33	0.45	0.56	0.92
		PI	6.74	6.74	6.74	6.74	6.77	6.77	6.77	6.77	6.79	6.79	6.79	6.79	6.85	6.85	6.85	6.85
	122	TC	34187	34576	34964	35353	36518	36518	36906	37295	37683	37683	37683	38072	40888	40888	40888	40888
		S/T	0.86	1.00	1.00	1.00	0.65	0.79	0.92	1.00	0.55	0.68	0.82	0.94	0.33	0.45	0.57	0.97
		PI	7.30	7.30	7.30	7.30	7.34	7.34	7.34	7.34	7.35	7.35	7.35	7.35	7.41	7.41	7.41	7.41

Manufacturer reserves the right to change, at any time, specifications and designs without notice and without obligations.

COOLING PERFORMANCE - 48K HH (Sheet 4 of 4)

AIRFLOW (CFM)	OUTDOOR (DB F)	ID (WB F)	60.8				64.4				66.2				71.6			
		ID (DB F)	73.4	77.0	80.6	84.2	73.4	77.0	80.6	84.2	73.4	77.0	80.6	84.2	73.4	77.0	80.6	84.2
1470	-22	TC	53168	53168	53690	54213	55595	55595	55595	56653	56806	56806	56806	56806	60142	60142	60142	60142
		S/T	0.75	0.87	1.00	1.00	0.59	0.68	0.79	1.00	0.49	0.61	0.70	0.80	0.32	0.42	0.50	0.60
		PI	3.91	3.91	3.91	3.91	3.91	3.91	3.91	3.91	3.88	3.88	3.88	3.88	3.86	3.86	3.86	3.86
	-10	TC	52775	52775	53294	53813	55280	55280	55280	56332	56523	56523	56523	56523	59960	59960	59960	59960
		S/T	0.76	0.87	1.00	1.00	0.59	0.68	0.80	1.00	0.50	0.61	0.71	0.81	0.33	0.42	0.51	0.60
		PI	3.90	3.90	3.90	3.90	3.90	3.90	3.90	3.90	3.89	3.89	3.89	3.89	3.87	3.87	3.87	3.87
	0	TC	52448	52448	52963	53479	55017	55017	55017	56064	56286	56286	56286	56286	59808	59808	59808	59808
		S/T	0.76	0.88	1.00	1.00	0.60	0.68	0.80	1.00	0.50	0.62	0.71	0.81	0.33	0.42	0.51	0.61
		PI	3.90	3.90	3.90	3.90	3.90	3.90	3.90	3.90	3.89	3.89	3.89	3.89	3.88	3.88	3.88	3.88
	5	TC	52294	52294	52809	53323	54916	54916	54916	55961	56201	56201	56201	56201	59768	59768	59768	59768
		S/T	0.76	0.88	1.00	1.00	0.60	0.69	0.80	1.00	0.50	0.62	0.72	0.81	0.33	0.42	0.51	0.61
		PI	3.91	3.91	3.91	3.91	3.91	3.91	3.91	3.91	3.89	3.89	3.89	3.89	3.89	3.89	3.89	3.89
	14	TC	51984	51984	52495	53007	54608	54608	54608	55647	55920	55920	55920	55920	59566	59566	59566	59566
		S/T	0.77	0.89	1.00	1.00	0.60	0.69	0.81	1.00	0.50	0.62	0.72	0.82	0.33	0.43	0.51	0.61
		PI	3.88	3.88	3.88	3.88	3.90	3.90	3.90	3.90	3.89	3.89	3.89	3.89	3.89	3.89	3.89	3.89
	23	TC	51674	51674	52182	52691	54402	54402	54402	55437	55715	55715	55715	55715	59414	59414	59414	59414
		S/T	0.77	0.89	1.00	1.00	0.61	0.69	0.81	1.00	0.51	0.62	0.72	0.82	0.33	0.43	0.52	0.62
		PI	3.88	3.88	3.88	3.88	3.89	3.89	3.89	3.89	3.89	3.89	3.89	3.89	3.90	3.90	3.90	3.90
	32	TC	51416	51416	51921	52427	54196	54196	54196	55228	55561	55561	55561	55561	59364	59364	59364	59364
		S/T	0.78	0.89	1.00	1.00	0.61	0.70	0.82	1.00	0.51	0.63	0.73	0.83	0.33	0.43	0.52	0.62
		PI	3.90	3.90	3.90	3.90	3.91	3.91	3.91	3.91	3.90	3.90	3.90	3.90	3.91	3.91	3.91	3.91
	41	TC	51157	51157	51661	52164	53991	53991	53991	55018	55381	55381	55381	55381	59313	59313	59313	59313
		S/T	0.78	0.90	0.99	0.99	0.61	0.70	0.82	1.00	0.51	0.63	0.73	0.83	0.34	0.43	0.52	0.62
		PI	3.93	3.93	3.93	3.93	3.94	3.94	3.94	3.94	3.93	3.93	3.93	3.93	3.94	3.94	3.94	3.94
	50	TC	50847	50847	51347	51848	53734	53734	53734	54756	55151	55151	55151	55151	59161	59161	59161	59161
		S/T	0.78	0.90	1.00	1.00	0.61	0.70	0.82	1.00	0.51	0.63	0.73	0.83	0.34	0.44	0.52	0.62
		PI	4.00	4.00	4.00	4.00	4.00	4.00	4.00	4.00	3.99	3.99	3.99	3.99	3.99	3.99	3.99	3.99
	59	TC	50434	50434	50930	51426	53374	53374	53374	54389	54818	54818	54818	54818	58908	58908	58908	58908
		S/T	0.79	0.91	1.00	1.00	0.62	0.71	0.83	0.93	0.52	0.64	0.74	0.84	0.34	0.44	0.53	0.63
		PI	4.09	4.09	4.09	4.09	4.10	4.10	4.10	4.10	4.08	4.08	4.08	4.08	4.08	4.08	4.08	4.08
	68	TC	49866	49866	50356	50846	52808	52808	52808	53813	54279	54279	54279	54279	58403	58403	58403	58403
		S/T	0.79	0.91	1.00	1.00	0.62	0.71	0.83	0.93	0.52	0.64	0.74	0.84	0.34	0.44	0.53	0.63
		PI	4.24	4.24	4.24	4.24	4.24	4.24	4.24	4.24	4.22	4.22	4.22	4.22	4.20	4.20	4.20	4.20
	77	TC	47508	47508	47998	48489	50352	50352	50352	51356	51824	51824	51824	51824	55951	55951	55951	55951
		S/T	0.81	0.91	1.00	1.00	0.61	0.73	0.84	0.95	0.52	0.64	0.75	0.87	0.34	0.44	0.54	0.65
		PI	4.68	4.68	4.68	4.68	4.67	4.67	4.67	4.67	4.67	4.67	4.67	4.67	4.68	4.68	4.68	4.68
	86	TC	45150	46154	46749	47343	48096	48096	48096	49101	49669	49669	49669	49669	53397	53397	53397	53397
		S/T	0.81	0.94	1.00	1.00	0.63	0.74	0.87	0.97	0.54	0.65	0.76	0.89	0.33	0.44	0.54	0.66
		PI	5.12	5.12	5.12	5.12	5.13	5.13	5.13	5.13	5.14	5.14	5.14	5.14	5.16	5.16	5.16	5.16
	95	TC	42992	43795	44188	44580	45640	45640	45640	46233	47213	47213	47900	47213	50945	50945	50945	50945
		S/T	0.84	0.96	1.00	1.00	0.64	0.77	0.89	1.00	0.54	0.66	0.77	0.92	0.33	0.44	0.56	0.67
		PI	5.60	5.60	5.60	5.60	5.62	5.62	5.62	5.62	5.63	5.63	5.64	5.63	5.71	5.71	5.71	5.71
	104	TC	40081	40691	41079	41467	42660	42660	43021	43518	44083	44083	44454	44444	47598	47598	47598	47598
		S/T	0.88	1.00	1.00	1.00	0.65	0.79	0.94	1.00	0.55	0.69	0.83	0.94	0.34	0.44	0.57	1.00
		PI	6.18	6.18	6.18	6.18	6.20	6.20	6.20	6.20	6.22	6.22	6.22	6.22	6.29	6.29	6.29	6.29
	115	TC	37114	37502	37890	38279	39642	39642	40439	40827	40904	40904	40904	41700	44205	44205	44205	44205
		S/T	0.89	1.00	1.00	1.00	0.67	0.81	0.94	1.00	0.57	0.70	0.83	0.97	0.32	0.46	0.58	1.00
		PI	6.87	6.87	6.87	6.87	6.90	6.90	6.90	6.90	6.92	6.92	6.92	6.92	6.99	6.99	6.99	6.99
	122	TC	34881	35370	35861	36249	37211	37211	38007	38395	38376	38376	38376	39171	41681	41681	41681	41681
		S/T	0.92	1.00	1.00	1.00	0.68	0.84	0.98	1.00	0.56	0.71	0.87	1.00	0.32	0.46	0.59	1.00
		PI	7.44	7.44	7.44	7.44	7.49	7.49	7.49	7.49	7.49	7.49	7.49	7.49	7.55	7.55	7.55	7.55

LEGEND

TC - Total Cooling Capacity (BTU/hr)
S/T - Sensible Cooling Capacity Ratio
PI - Power Input (kW)

Gray shaded area is Extrapolated Data

HEATING PERFORMANCE AT INDOOR DRY BULB TEMPERATURE- 48K HH (Sheet 1 of 2)

AIRFLOW (CFM)	OUTDOOR (DB F)	TC?TOTAL CAPACITY IN BTU/HR				PI?TOTAL POWER IN KILOWATTS			
		Indoor Conditions (DB F)				Indoor Conditions (DB F)			
		60.8	68.0	71.6	75.2	60.8	68.0	71.6	75.2
906	-22.0	32845	32576	32442	32240	4.05	4.20	4.11	4.13
	-10.0	37792	37483	37328	37096	4.75	4.91	4.81	4.84
	0.0	41914	41571	41400	41143	5.32	5.51	5.40	5.43
	5.0	44119	43758	43578	43307	5.64	5.84	5.72	5.76
	14.0	47110	46725	46532	46243	6.02	6.23	6.10	6.14
	17.0	49354	48950	48748	48445	6.39	6.62	6.48	6.52
	22.0	48454	48058	47860	47563	6.23	6.28	6.31	6.34
	27.0	47464	46968	46770	46572	5.91	5.95	5.97	5.99
	32.0	45977	45482	45284	44986	5.59	5.62	5.63	5.65
	37.0	45977	45482	45184	44887	5.33	5.35	5.35	5.36
	42.0	47464	46869	46572	46274	5.07	5.07	5.07	5.07
	44.6	49130	48515	48416	48119	4.94	4.78	4.93	4.92
	52.0	49307	48614	48317	47921	4.50	4.48	4.46	4.45
	57.0	49307	48614	48218	47822	4.22	4.18	4.16	4.14
	62.0	49307	48515	48119	47723	3.93	3.88	3.85	3.82
	64.4	49307	48515	48119	47723	3.79	3.73	3.70	3.67
1095	-22.0	33528	33259	33125	32991	4.09	4.24	4.15	4.18
	-10.0	38578	38269	38114	37960	4.80	4.97	4.86	4.89
	0.0	42786	42443	42272	42100	5.38	5.57	5.46	5.49
	5.0	45037	44676	44496	44315	5.70	5.91	5.78	5.82
	14.0	48090	47705	47512	47319	6.08	6.30	6.17	6.20
	17.0	50380	49977	49775	49573	6.46	6.69	6.55	6.59
	22.0	49445	49049	48851	48653	6.29	6.35	6.37	6.39
	27.0	48454	47959	47761	47464	5.97	6.01	6.03	6.06
	32.0	46968	46473	46175	45878	5.65	5.68	5.69	5.71
	37.0	46968	46374	46076	45779	5.39	5.39	5.40	5.41
	42.0	48454	47761	47464	47166	5.12	5.12	5.12	5.12
	44.6	50224	49505	49406	49109	4.99	4.83	4.98	4.98
	52.0	50297	49604	49307	48911	4.55	4.52	4.51	4.50
	57.0	50297	49604	49208	48812	4.27	4.22	4.20	4.18
	62.0	50297	49505	49109	48713	3.97	3.91	3.89	3.86
	64.4	50297	49505	49109	48713	3.83	3.77	3.74	3.70
1283	-22.0	33902	33565	33431	33296	4.14	4.28	4.20	4.21
	-10.0	39008	38621	38466	38311	4.85	5.02	4.91	4.94
	0.0	43263	42834	42662	42490	5.44	5.63	5.51	5.54
	5.0	45539	45087	44906	44725	5.76	5.97	5.84	5.87
	14.0	48626	48144	47951	47758	6.15	6.36	6.23	6.26
	17.0	50942	50436	50234	50032	6.53	6.76	6.62	6.65
	22.0	49941	49445	49247	49049	6.36	6.40	6.43	6.46
	27.0	48950	48454	48157	47959	6.03	6.08	6.10	6.12
	32.0	47364	46869	46572	46374	5.71	5.74	5.75	5.77
	37.0	47364	46869	46572	46274	5.44	5.45	5.46	5.46
	42.0	48851	48256	47959	47662	5.17	5.17	5.17	5.17
	44.6	50616	50000	49901	49604	5.04	4.88	5.03	5.03
	52.0	50792	50099	49802	49406	4.60	4.57	4.56	4.54
	57.0	50792	50099	49703	49307	4.31	4.27	4.25	4.23
	62.0	50792	50000	49604	49208	4.01	3.96	3.93	3.90
	64.4	50792	50000	49604	49208	3.87	3.81	3.77	3.74

Manufacturer reserves the right to change, at any time, specifications and designs without notice and without obligations.

HEATING PERFORMANCE AT INDOOR DRY BULB TEMPERATURE- 48K HH (Sheet 2 of 2)

AIRFLOW (CFM)	OUTDOOR (DB F)	TC?TOTAL CAPACITY IN BTU/HR				PI?TOTAL POWER IN KILOWATTS			
		Indoor Conditions (DB F)				Indoor Conditions (DB F)			
		60.8	68.0	71.6	75.2	60.8	68.0	71.6	75.2
1470	-22.0	33902	33565	33431	33296	4.14	4.28	4.20	4.21
	-10.0	39008	38621	38466	38311	4.85	5.02	4.91	4.94
	0.0	43263	42834	42662	42490	5.44	5.63	5.51	5.54
	5.0	46046	45502	45321	45140	5.83	6.03	5.91	5.92
	14.0	49168	48586	48393	48200	6.21	6.43	6.30	6.32
	17.0	51509	50900	50698	50495	6.60	6.83	6.69	6.71
	22.0	50441	49845	49647	49449	6.43	6.46	6.49	6.53
	27.0	49450	48955	48557	48460	6.09	6.15	6.17	6.18
	32.0	47764	47269	46971	46874	5.77	5.80	5.81	5.83
	37.0	47764	47370	47072	46775	5.50	5.51	5.52	5.51
	42.0	49250	48757	48460	48162	5.22	5.22	5.22	5.22
	44.6	51011	50500	50401	50104	5.09	4.93	5.08	5.08
	52.0	51292	50599	50302	49906	4.65	4.62	4.61	4.58
	57.0	51292	50599	50203	49807	4.35	4.32	4.30	4.28
	62.0	51292	50500	50104	49708	4.05	4.01	3.97	3.94
	64.4	51292	50500	50104	49708	3.91	3.85	3.80	3.78

Gray shaded area is Extrapolated Data

COOLING PERFORMANCE - 60K (Sheet 1 of 4)

AIRFLOW (CFM)	OUTDOOR (DB F)	ID (WB F)	60.8				64.4				66.2				71.6			
		ID (DB F)	73.4	77.0	80.6	84.2	73.4	77.0	80.6	84.2	73.4	77.0	80.6	84.2	73.4	77.0	80.6	84.2
1136	-22	TC	60741	60752	60752	60752	63599	64863	64863	64863	65071	65071	65071	65071	68775	68775	68775	68775
		S/T	0.66	0.71	0.78	0.84	0.54	0.60	0.66	0.72	0.48	0.54	0.61	0.67	0.37	0.42	0.48	0.53
		PI	4.74	4.74	4.74	4.74	4.75	4.75	4.75	4.75	4.76	4.76	4.76	4.76	4.79	4.79	4.79	4.79
	-10	TC	60293	60303	60303	60303	63239	64495	64495	64495	64746	64746	64746	64746	68567	68567	68567	68567
		S/T	0.66	0.72	0.79	0.84	0.55	0.60	0.66	0.73	0.49	0.55	0.61	0.67	0.37	0.42	0.48	0.54
		PI	4.29	4.28	4.28	4.29	4.29	4.29	4.29	4.29	4.30	4.30	4.30	4.30	4.32	4.32	4.32	4.32
	0	TC	59919	59929	59929	59929	62938	64188	64188	64188	64475	64475	64475	64475	68393	68393	68393	68393
		S/T	0.66	0.72	0.79	0.85	0.55	0.61	0.66	0.73	0.49	0.55	0.62	0.67	0.38	0.42	0.48	0.54
		PI	4.00	4.00	4.00	4.00	4.00	4.00	4.00	4.00	4.01	4.01	4.01	4.01	4.01	4.01	4.01	4.01
	5	TC	59744	59754	59754	59754	62823	64071	64071	64071	64378	64378	64378	64378	68347	68347	68347	68347
		S/T	0.67	0.72	0.79	0.85	0.55	0.61	0.67	0.73	0.49	0.55	0.62	0.68	0.38	0.42	0.48	0.54
		PI	3.76	3.76	3.76	3.76	3.74	3.74	3.74	3.74	3.75	3.75	3.75	3.75	3.74	3.74	3.74	3.74
	14	TC	59389	59400	59400	59400	62470	63711	63711	63711	64055	64055	64055	64055	68116	68116	68116	68116
		S/T	0.67	0.73	0.80	0.85	0.55	0.61	0.67	0.74	0.49	0.55	0.62	0.68	0.38	0.43	0.49	0.54
		PI	3.74	3.74	3.74	3.74	3.73	3.73	3.73	3.73	3.74	3.74	3.74	3.74	3.74	3.74	3.74	3.74
	23	TC	59035	59045	59045	59045	62235	63471	63471	63471	63820	63820	63820	63820	67942	67942	67942	67942
		S/T	0.67	0.73	0.80	0.86	0.56	0.62	0.67	0.74	0.50	0.56	0.62	0.68	0.38	0.43	0.49	0.55
		PI	3.73	3.73	3.73	3.73	3.73	3.73	3.73	3.73	3.74	3.74	3.74	3.74	3.75	3.75	3.75	3.75
	32	TC	58740	58750	58750	58750	61999	63231	63231	63231	63644	63644	63644	63644	67884	67884	67884	67884
		S/T	0.68	0.74	0.80	0.86	0.56	0.62	0.68	0.74	0.50	0.56	0.63	0.69	0.38	0.43	0.49	0.55
		PI	3.75	3.75	3.75	3.75	3.74	3.74	3.74	3.74	3.75	3.75	3.75	3.75	3.76	3.76	3.76	3.76
	41	TC	58445	58455	58455	58455	61764	62991	62991	62991	63439	63439	63439	63439	67827	67827	67827	67827
		S/T	0.68	0.74	0.81	0.87	0.56	0.62	0.68	0.75	0.50	0.56	0.63	0.69	0.38	0.43	0.49	0.55
		PI	3.78	3.78	3.78	3.78	3.78	3.78	3.78	3.78	3.78	3.78	3.78	3.78	3.79	3.79	3.79	3.79
	50	TC	58091	58101	58101	58101	61470	62691	62691	62691	63175	63175	63175	63175	67653	67653	67653	67653
		S/T	0.68	0.74	0.81	0.87	0.56	0.62	0.68	0.75	0.50	0.56	0.63	0.69	0.39	0.44	0.50	0.55
		PI	3.85	3.85	3.85	3.85	3.83	3.83	3.83	3.83	3.84	3.84	3.84	3.84	3.84	3.84	3.84	3.84
	59	TC	57618	57628	57628	57628	61058	62271	62271	62271	62793	62793	62793	62793	67364	67364	67364	67364
		S/T	0.69	0.75	0.82	0.88	0.57	0.63	0.69	0.76	0.51	0.57	0.64	0.70	0.39	0.44	0.50	0.56
		PI	3.94	3.94	3.94	3.94	3.92	3.92	3.92	3.92	3.93	3.93	3.93	3.93	3.92	3.92	3.92	3.92
	68	TC	56969	56979	56979	56979	60411	60411	60411	60411	62176	62176	62176	62176	66786	66786	66786	66786
		S/T	0.69	0.75	0.82	0.88	0.57	0.63	0.69	0.76	0.51	0.57	0.64	0.70	0.39	0.44	0.50	0.56
		PI	4.08	4.08	4.08	4.08	4.06	4.06	4.06	4.06	4.06	4.06	4.06	4.06	4.04	4.04	4.04	4.04
	77	TC	54331	54331	54331	54919	57665	57665	57665	57665	59431	59431	59431	59431	63942	63942	63942	63942
		S/T	0.69	0.76	0.83	0.90	0.57	0.63	0.70	0.77	0.51	0.58	0.64	0.70	0.38	0.44	0.50	0.56
		PI	4.50	4.50	4.50	4.50	4.49	4.49	4.49	4.49	4.49	4.49	4.49	4.49	4.50	4.50	4.50	4.50
	86	TC	51781	51781	51781	52271	55017	55017	55017	55017	56783	56783	56783	56783	61098	61098	61098	61098
		S/T	0.70	0.77	0.84	0.91	0.57	0.64	0.71	0.78	0.51	0.58	0.65	0.71	0.38	0.44	0.50	0.56
		PI	4.92	4.92	4.92	4.92	4.93	4.93	4.93	4.93	4.94	4.94	4.94	4.94	4.96	4.96	4.96	4.96
	95	TC	49133	49133	49133	49624	52369	52369	52369	52369	53939	53939	54821	53939	58254	58254	58254	58254
		S/T	0.70	0.78	0.86	0.93	0.57	0.64	0.72	0.79	0.51	0.58	0.65	0.72	0.37	0.44	0.50	0.57
		PI	5.38	5.38	5.38	5.38	5.40	5.40	5.40	5.40	5.41	5.41	5.42	5.41	5.45	5.45	5.45	5.45
	104	TC	46326	46326	46504	46951	49432	49432	49432	49432	50958	50958	51440	50958	55098	55098	55098	55098
		S/T	0.72	0.80	0.88	0.96	0.58	0.66	0.74	0.82	0.51	0.59	0.67	0.74	0.37	0.44	0.51	0.58
		PI	5.94	5.94	5.94	5.94	5.96	5.96	5.96	5.96	5.97	5.97	5.98	5.97	6.02	6.02	6.02	6.02
	115	TC	42899	42899	43292	43684	45844	45844	45844	45844	47316	47316	47316	47316	51243	51243	51243	51243
		S/T	0.72	0.81	0.90	0.98	0.58	0.66	0.75	0.83	0.51	0.59	0.67	0.76	0.36	0.44	0.51	0.58
		PI	6.60	6.60	6.60	6.60	6.63	6.63	6.63	6.63	6.65	6.65	6.65	6.65	6.70	6.70	6.70	6.70
	122	TC	40248	40248	40641	41034	43095	43095	43095	43095	44470	44470	44470	44470	48200	48200	48200	48200
		S/T	0.74	0.83	0.92	1.00	0.59	0.67	0.76	0.85	0.52	0.60	0.69	0.77	0.36	0.44	0.51	0.59
		PI	7.15	7.15	7.15	7.15	7.18	7.18	7.18	7.18	7.20	7.20	7.20	7.20	7.26	7.26	7.26	7.26

Manufacturer reserves the right to change, at any time, specifications and designs without notice and without obligations.

COOLING PERFORMANCE - 60K (Sheet 2 of 4)

AIRFLOW (CFM)	OUTDOOR (DB F)	ID (WB F)	60.8				64.4				66.2				71.6			
		ID (DB F)	73.4	77.0	80.6	84.2	73.4	77.0	80.6	84.2	73.4	77.0	80.6	84.2	73.4	77.0	80.6	84.2
1360	-22	TC	61925	61925	61925	62553	64863	64863	64863	64863	66430	66430	66430	66430	70215	70215	70215	70215
		S/T	0.68	0.76	0.97	1.00	0.55	0.63	0.69	0.77	0.48	0.56	0.64	0.70	0.35	0.42	0.48	0.55
		PI	4.74	4.74	4.74	4.74	4.75	4.75	4.75	4.75	4.76	4.76	4.76	4.76	4.79	4.79	4.79	4.79
	-10	TC	61468	61468	61468	62091	64495	64495	64495	64495	66098	66098	66098	66098	70002	70002	70002	70002
		S/T	0.68	0.77	0.97	1.00	0.56	0.63	0.70	0.78	0.49	0.56	0.64	0.71	0.35	0.42	0.49	0.56
		PI	4.29	4.28	4.28	4.29	4.29	4.29	4.29	4.29	4.30	4.30	4.30	4.30	4.32	4.32	4.32	4.32
	0	TC	61086	61086	61086	61706	64188	64188	64188	64188	65822	65822	65822	65822	69825	69825	69825	69825
		S/T	0.68	0.77	0.98	1.00	0.56	0.64	0.70	0.78	0.49	0.57	0.65	0.71	0.36	0.42	0.49	0.56
		PI	4.09	4.09	4.09	4.09	4.08	4.08	4.08	4.08	4.08	4.08	4.08	4.08	4.10	4.10	4.10	4.10
	5	TC	60908	60908	60908	61525	64071	64071	64071	64071	65723	65723	65723	65723	69778	69778	69778	69778
		S/T	0.69	0.77	0.98	1.00	0.56	0.64	0.70	0.78	0.49	0.57	0.65	0.71	0.36	0.42	0.49	0.56
		PI	3.84	3.84	3.84	3.84	3.82	3.82	3.82	3.82	3.82	3.82	3.82	3.82	3.81	3.81	3.81	3.81
	14	TC	60547	60547	60547	61160	63711	63711	63711	63711	65393	65393	65393	65393	69542	69542	69542	69542
		S/T	0.69	0.78	0.99	1.00	0.56	0.64	0.71	0.79	0.49	0.57	0.65	0.72	0.36	0.43	0.49	0.56
		PI	3.82	3.82	3.82	3.82	3.81	3.81	3.81	3.81	3.81	3.81	3.81	3.81	3.82	3.82	3.82	3.82
	23	TC	60186	60186	60186	60796	63471	63471	63471	63471	65153	65153	65153	65153	69365	69365	69365	69365
		S/T	0.69	0.78	0.99	1.00	0.57	0.64	0.71	0.79	0.50	0.58	0.65	0.72	0.36	0.43	0.50	0.57
		PI	3.81	3.81	3.81	3.81	3.81	3.81	3.81	3.81	3.81	3.81	3.81	3.81	3.82	3.82	3.82	3.82
	32	TC	59885	59885	59885	60492	63231	63231	63231	63231	64974	64974	64974	64974	69306	69306	69306	69306
		S/T	0.70	0.78	1.00	1.00	0.57	0.65	0.72	0.79	0.50	0.58	0.66	0.73	0.36	0.43	0.50	0.57
		PI	3.83	3.83	3.83	3.83	3.82	3.82	3.82	3.82	3.83	3.83	3.83	3.83	3.83	3.83	3.83	3.83
	41	TC	59584	59584	59584	60188	62991	62991	62991	62991	64764	64764	64764	64764	69247	69247	69247	69247
		S/T	0.70	0.79	1.00	1.00	0.57	0.65	0.72	0.80	0.50	0.58	0.66	0.73	0.36	0.43	0.50	0.57
		PI	3.86	3.86	3.86	3.86	3.86	3.86	3.86	3.86	3.86	3.86	3.86	3.86	3.86	3.86	3.86	3.86
	50	TC	59223	59223	59223	59823	62691	62691	62691	62691	64494	64494	64494	64494	69070	69070	69070	69070
		S/T	0.70	0.79	1.00	1.00	0.57	0.65	0.72	0.80	0.50	0.58	0.66	0.73	0.37	0.44	0.50	0.57
		PI	3.93	3.93	3.93	3.93	3.92	3.92	3.92	3.92	3.91	3.91	3.91	3.91	3.91	3.91	3.91	3.91
	59	TC	58741	58741	58741	59337	62271	62271	62271	62271	64104	64104	64104	64104	68775	68775	68775	68775
		S/T	0.71	0.80	0.88	0.96	0.58	0.66	0.73	0.81	0.51	0.59	0.67	0.74	0.37	0.44	0.51	0.58
		PI	4.02	4.02	4.02	4.02	4.01	4.01	4.01	4.01	4.00	4.00	4.00	4.00	4.00	4.00	4.00	4.00
	68	TC	58079	58079	58079	58668	61611	61611	61611	61611	63475	63475	63475	63475	68184	68184	68184	68184
		S/T	0.71	0.80	0.88	0.96	0.58	0.66	0.73	0.81	0.51	0.59	0.67	0.74	0.37	0.44	0.51	0.58
		PI	4.16	4.16	4.16	4.16	4.14	4.14	4.14	4.14	4.14	4.14	4.14	4.14	4.12	4.12	4.12	4.12
	77	TC	55430	55430	56019	56608	58864	58864	58864	58864	60630	60630	60630	60630	65241	65241	65241	65241
		S/T	0.72	0.81	0.89	0.98	0.58	0.66	0.75	0.83	0.51	0.59	0.67	0.75	0.36	0.44	0.51	0.58
		PI	4.59	4.59	4.59	4.59	4.59	4.59	4.59	4.59	4.59	4.59	4.59	4.59	4.59	4.59	4.59	4.59
	86	TC	52781	52781	53272	53762	56117	56117	56117	56117	57883	57883	57883	57883	62396	62396	62396	62396
		S/T	0.73	0.82	0.91	1.00	0.58	0.67	0.76	0.84	0.52	0.60	0.68	0.77	0.36	0.44	0.51	0.59
		PI	5.03	5.03	5.03	5.03	5.04	5.04	5.04	5.04	5.04	5.04	5.04	5.04	5.06	5.06	5.06	5.06
	95	TC	50133	50133	50623	51114	53370	53370	53370	53370	55038	55038	55921	55038	59453	59453	59453	59453
		S/T	0.74	0.84	0.93	1.00	0.59	0.68	0.77	0.86	0.52	0.61	0.69	0.78	0.36	0.44	0.52	0.60
		PI	5.49	5.49	5.49	5.49	5.51	5.51	5.51	5.51	5.53	5.53	5.53	5.53	5.53	5.53	5.53	5.53
	104	TC	46718	46895	47380	47865	49788	49788	49788	50009	51349	51349	51826	51349	55540	55540	55540	55540
		S/T	0.77	0.87	0.97	1.00	0.60	0.70	0.80	0.90	0.52	0.62	0.72	0.81	0.35	0.44	0.53	0.62
		PI	6.06	6.06	6.06	6.06	6.08	6.08	6.08	6.08	6.10	6.10	6.11	6.10	6.13	6.13	6.13	6.13
	115	TC	43278	43666	44151	44636	46189	46189	46189	46674	47644	47644	47644	47644	51623	51623	51623	51623
		S/T	0.78	0.88	0.99	1.00	0.61	0.71	0.81	0.91	0.53	0.63	0.73	0.83	0.35	0.44	0.53	0.62
		PI	6.74	6.74	6.74	6.74	6.77	6.77	6.77	6.77	6.79	6.79	6.79	6.79	6.84	6.84	6.84	6.84
	122	TC	40561	40949	41337	41725	43375	43375	43375	43763	44830	44830	44830	44830	48615	48615	48615	48615
		S/T	0.80	0.91	1.00	1.00	0.61	0.73	0.84	0.94	0.53	0.64	0.75	0.85	0.34	0.44	0.54	0.91
		PI	7.30	7.30	7.30	7.30	7.33	7.33	7.33	7.33	7.35	7.35	7.35	7.35	7.41	7.41	7.41	7.41

Manufacturer reserves the right to change, at any time, specifications and designs without notice and without obligations.

COOLING PERFORMANCE - 60K (Sheet 3 of 4)

AIRFLOW (CFM)	OUTDOOR (DB F)	ID (WB F)	60.8				64.4				66.2				71.6			
		ID (DB F)	73.4	77.0	80.6	84.2	73.4	77.0	80.6	84.2	73.4	77.0	80.6	84.2	73.4	77.0	80.6	84.2
1583	-22	TC	63180	63180	63808	64436	66102	66102	66102	66722	67662	67662	67662	67662	71528	71528	71528	71528
		S/T	0.72	0.82	1.00	1.00	0.57	0.67	0.75	0.96	0.49	0.59	0.68	0.77	0.33	0.42	0.50	0.58
		PI	4.74	4.74	4.74	4.74	4.75	4.75	4.75	4.75	4.76	4.76	4.76	4.76	4.79	4.79	4.79	4.79
	-10	TC	62714	62714	63337	63960	65727	65727	65727	66343	67324	67324	67324	67324	71312	71312	71312	71312
		S/T	0.73	0.82	1.00	1.00	0.57	0.67	0.76	0.97	0.50	0.59	0.68	0.78	0.34	0.42	0.51	0.58
		PI	4.29	4.28	4.28	4.29	4.29	4.29	4.29	4.29	4.30	4.30	4.30	4.30	4.32	4.32	4.32	4.32
	0	TC	62325	62325	62944	63563	65414	65414	65414	66028	67043	67043	67043	67043	71131	71131	71131	71131
		S/T	0.73	0.83	1.00	1.00	0.58	0.67	0.76	0.97	0.50	0.60	0.68	0.78	0.34	0.42	0.51	0.59
		PI	4.17	4.17	4.17	4.17	4.17	4.17	4.17	4.17	4.17	4.17	4.17	4.17	4.18	4.18	4.18	4.18
	5	TC	62143	62143	62760	63377	65295	65295	65295	65907	66942	66942	66942	66942	71083	71083	71083	71083
		S/T	0.73	0.83	1.00	1.00	0.58	0.68	0.76	0.98	0.50	0.60	0.69	0.78	0.34	0.42	0.51	0.59
		PI	3.92	3.92	3.92	3.92	3.91	3.91	3.91	3.91	3.90	3.90	3.90	3.90	3.89	3.89	3.89	3.89
	14	TC	61774	61774	62388	63001	64928	64928	64928	65537	66606	66606	66606	66606	70843	70843	70843	70843
		S/T	0.74	0.83	1.00	1.00	0.58	0.68	0.77	0.98	0.50	0.60	0.69	0.79	0.34	0.43	0.51	0.59
		PI	3.90	3.90	3.90	3.90	3.90	3.90	3.90	3.90	3.89	3.89	3.89	3.89	3.90	3.90	3.90	3.90
	23	TC	61406	61406	62016	62626	64684	64684	64684	65290	66362	66362	66362	66362	70662	70662	70662	70662
		S/T	0.74	0.84	1.00	1.00	0.59	0.68	0.77	0.99	0.51	0.60	0.69	0.79	0.34	0.43	0.52	0.59
		PI	3.89	3.89	3.89	3.89	3.89	3.89	3.89	3.89	3.89	3.89	3.89	3.89	3.90	3.90	3.90	3.90
	32	TC	61099	61099	61706	62313	64439	64439	64439	65043	66179	66179	66179	66179	70602	70602	70602	70602
		S/T	0.74	0.84	1.00	1.00	0.59	0.69	0.77	0.99	0.51	0.61	0.70	0.79	0.34	0.43	0.52	0.60
		PI	3.91	3.91	3.91	3.91	3.91	3.91	3.91	3.91	3.91	3.91	3.91	3.91	3.92	3.92	3.92	3.92
	41	TC	60792	60792	61395	61999	64194	64194	64194	64796	65965	65965	65965	65965	70542	70542	70542	70542
		S/T	0.75	0.85	1.00	1.00	0.59	0.69	0.78	1.00	0.51	0.61	0.70	0.80	0.34	0.43	0.52	0.60
		PI	3.95	3.95	3.95	3.95	3.94	3.94	3.94	3.94	3.94	3.94	3.94	3.94	3.94	3.94	3.94	3.94
	50	TC	60423	60423	61023	61624	63889	63889	63889	64488	65690	65690	65690	65690	70362	70362	70362	70362
		S/T	0.75	0.85	1.00	1.00	0.59	0.69	0.78	1.00	0.51	0.61	0.70	0.80	0.35	0.44	0.52	0.60
		PI	4.01	4.01	4.01	4.01	4.00	4.00	4.00	4.00	4.00	4.00	4.00	4.00	4.00	4.00	4.00	4.00
	59	TC	59932	59932	60527	61123	63461	63461	63461	64056	65293	65293	65293	65293	70061	70061	70061	70061
		S/T	0.76	0.86	0.96	1.00	0.60	0.70	0.79	0.89	0.52	0.62	0.71	0.81	0.35	0.44	0.53	0.61
		PI	4.11	4.11	4.11	4.11	4.09	4.09	4.09	4.09	4.09	4.09	4.09	4.09	4.08	4.08	4.08	4.08
	68	TC	59256	59256	59845	60434	62788	62788	62788	63377	64652	64652	64652	64652	69460	69460	69460	69460
		S/T	0.76	0.86	0.96	1.00	0.60	0.70	0.79	0.89	0.52	0.62	0.71	0.81	0.35	0.44	0.53	0.61
		PI	4.25	4.25	4.25	4.25	4.23	4.23	4.23	4.23	4.22	4.22	4.22	4.22	4.20	4.20	4.20	4.20
	77	TC	56509	56509	57098	57687	60041	60041	60041	60630	61807	61807	61807	61807	66516	66516	66516	66516
		S/T	0.77	0.88	0.99	1.00	0.60	0.71	0.81	0.91	0.53	0.63	0.73	0.82	0.35	0.44	0.53	0.62
		PI	4.68	4.68	4.68	4.68	4.67	4.67	4.67	4.67	4.67	4.67	4.67	4.67	4.68	4.68	4.68	4.68
	86	TC	53861	54351	54940	55528	57294	57294	57294	57883	58962	58962	58962	58962	63573	63573	63573	63573
		S/T	0.79	0.90	1.00	1.00	0.61	0.72	0.83	0.93	0.53	0.63	0.74	0.84	0.34	0.44	0.54	0.63
		PI	5.12	5.12	5.12	5.12	5.13	5.13	5.13	5.13	5.14	5.14	5.14	5.14	5.16	5.16	5.16	5.16
	95	TC	51114	51604	52095	52585	54449	54449	54449	55038	56117	56117	57000	56117	60532	60532	60532	60532
		S/T	0.80	0.92	1.00	1.00	0.62	0.73	0.84	0.95	0.53	0.64	0.75	0.86	0.34	0.44	0.54	0.65
		PI	5.60	5.60	5.60	5.60	5.62	5.62	5.62	5.62	5.63	5.63	5.64	5.63	5.67	5.67	5.67	5.67
	104	TC	47600	48086	48571	49056	50767	50767	50988	51526	52373	52373	52849	52593	56563	56563	56563	56563
		S/T	0.83	0.96	1.00	1.00	0.63	0.76	0.88	1.00	0.54	0.66	0.78	0.90	0.33	0.45	0.56	0.90
		PI	6.19	6.19	6.19	6.19	6.21	6.21	6.21	6.21	6.22	6.22	6.23	6.22	6.27	6.27	6.27	6.27
	115	TC	44054	44539	45025	45510	47062	47062	47547	48033	48615	48615	48615	49100	52593	52593	52593	52593
		S/T	0.85	0.98	1.00	1.00	0.64	0.77	0.90	1.00	0.55	0.67	0.80	0.92	0.33	0.45	0.56	0.92
		PI	6.88	6.88	6.88	6.88	6.91	6.91	6.91	6.91	6.93	6.93	6.93	6.93	6.99	6.99	6.99	6.99
	122	TC	41337	41725	42113	42502	44248	44248	44733	45219	45704	45704	45704	46189	49585	49585	49585	49585
		S/T	0.87	1.00	1.00	1.00	0.65	0.79	0.92	1.00	0.55	0.69	0.82	0.95	0.33	0.45	0.57	0.97
		PI	7.45	7.45	7.45	7.45	7.48	7.48	7.48	7.48	7.50	7.50	7.50	7.50	7.56	7.56	7.56	7.56

Manufacturer reserves the right to change, at any time, specifications and designs without notice and without obligations.

COOLING PERFORMANCE - 60K (Sheet 4 of 4)

AIRFLOW (CFM)	OUTDOOR (DB F)	ID (WB F)	60.8				64.4				66.2				71.6			
		ID (DB F)	73.4	77.0	80.6	84.2	73.4	77.0	80.6	84.2	73.4	77.0	80.6	84.2	73.4	77.0	80.6	84.2
1805	-22	TC	64461	64461	65748	66375	67365	67365	67365	68634	68917	68917	68917	68917	72866	72866	72866	72866
		S/T	0.77	0.88	1.00	1.00	0.59	0.71	0.81	1.00	0.50	0.62	0.72	0.84	0.31	0.42	0.52	0.61
		PI	4.00	4.00	4.00	4.00	3.98	3.98	3.98	3.98	3.97	3.97	3.97	3.97	3.95	3.95	3.95	3.95
	-10	TC	63985	63985	65262	65885	66983	66983	66983	68245	68573	68573	68573	68573	72646	72646	72646	72646
		S/T	0.78	0.89	1.00	1.00	0.59	0.71	0.82	1.00	0.51	0.62	0.72	0.85	0.32	0.42	0.53	0.61
		PI	4.00	4.00	4.00	4.00	3.98	3.98	3.98	3.98	3.97	3.97	3.97	3.97	3.96	3.96	3.96	3.96
	0	TC	63588	63588	64858	65476	66664	66664	66664	67920	68286	68286	68286	68286	72462	72462	72462	72462
		S/T	0.78	0.89	1.00	1.00	0.60	0.71	0.82	1.00	0.51	0.63	0.72	0.85	0.32	0.42	0.53	0.62
		PI	4.00	4.00	4.00	4.00	3.98	3.98	3.98	3.98	3.98	3.98	3.98	3.98	3.97	3.97	3.97	3.97
	5	TC	63402	63402	64668	65285	66543	66543	66543	67796	68183	68183	68183	68183	72413	72413	72413	72413
		S/T	0.79	0.89	1.00	1.00	0.60	0.72	0.83	1.00	0.51	0.63	0.73	0.86	0.32	0.42	0.53	0.62
		PI	4.00	4.00	4.00	4.00	3.99	3.99	3.99	3.99	3.98	3.98	3.98	3.98	3.98	3.98	3.98	3.98
	14	TC	63026	63026	64285	64898	66169	66169	66169	67415	67841	67841	67841	67841	72168	72168	72168	72168
		S/T	0.79	0.90	1.00	1.00	0.60	0.72	0.83	1.00	0.51	0.63	0.73	0.86	0.32	0.43	0.53	0.62
		PI	3.98	3.98	3.98	3.98	3.98	3.98	3.98	3.98	3.98	3.98	3.98	3.98	3.98	3.98	3.98	3.98
	23	TC	62650	62650	63901	64511	65920	65920	65920	67161	67593	67593	67593	67593	71984	71984	71984	71984
		S/T	0.79	0.90	1.00	1.00	0.61	0.72	0.83	1.00	0.52	0.64	0.73	0.86	0.32	0.43	0.54	0.63
		PI	3.98	3.98	3.98	3.98	3.97	3.97	3.97	3.97	3.98	3.98	3.98	3.98	3.99	3.99	3.99	3.99
	32	TC	62337	62337	63582	64188	65670	65670	65670	66907	67406	67406	67406	67406	71923	71923	71923	71923
		S/T	0.80	0.91	1.00	1.00	0.61	0.73	0.84	1.00	0.52	0.64	0.74	0.87	0.32	0.43	0.54	0.63
		PI	3.99	3.99	3.99	3.99	3.99	3.99	3.99	3.99	3.99	3.99	3.99	3.99	4.00	4.00	4.00	4.00
	41	TC	62024	62024	63262	63866	65421	65421	65421	66654	67188	67188	67188	67188	71862	71862	71862	71862
		S/T	0.80	0.91	0.99	0.99	0.61	0.73	0.84	1.00	0.52	0.64	0.74	0.87	0.33	0.43	0.54	0.63
		PI	4.03	4.03	4.03	4.03	4.02	4.02	4.02	4.02	4.02	4.02	4.02	4.02	4.03	4.03	4.03	4.03
	50	TC	61648	61648	62879	63479	65110	65110	65110	66336	66909	66909	66909	66909	71678	71678	71678	71678
		S/T	0.81	0.92	1.00	1.00	0.61	0.74	0.85	1.00	0.52	0.65	0.74	0.88	0.33	0.44	0.55	0.64
		PI	4.10	4.10	4.10	4.10	4.08	4.08	4.08	4.08	4.08	4.08	4.08	4.08	4.08	4.08	4.08	4.08
	59	TC	61147	61147	62368	62962	64673	64673	64673	65892	66504	66504	66504	66504	71371	71371	71371	71371
		S/T	0.81	0.92	1.00	1.00	0.62	0.74	0.85	0.97	0.53	0.65	0.75	0.88	0.33	0.44	0.55	0.64
		PI	4.20	4.20	4.20	4.20	4.18	4.18	4.18	4.18	4.18	4.18	4.18	4.18	4.17	4.17	4.17	4.17
	68	TC	60458	60458	61665	62253	63988	63988	63988	65193	65851	65851	65851	65851	70759	70759	70759	70759
		S/T	0.81	0.92	1.00	1.00	0.62	0.74	0.85	0.98	0.53	0.65	0.75	0.89	0.33	0.44	0.55	0.64
		PI	4.34	4.34	4.34	4.34	4.32	4.32	4.32	4.32	4.31	4.31	4.31	4.31	4.29	4.29	4.29	4.29
	77	TC	57610	57610	58198	58786	61242	61242	61242	62449	63007	63007	63007	63007	67817	67817	67817	67817
		S/T	0.82	0.96	1.00	1.00	0.62	0.76	0.87	1.00	0.55	0.67	0.80	0.90	0.34	0.44	0.55	0.66
		PI	4.78	4.78	4.78	4.78	4.76	4.76	4.76	4.76	4.76	4.76	4.76	4.76	4.78	4.78	4.78	4.78
	86	TC	54962	55968	56660	57352	58496	58496	58496	59704	60061	60061	60061	60061	64773	64773	64773	64773
		S/T	0.85	0.99	1.00	1.00	0.64	0.77	0.91	1.00	0.54	0.66	0.81	0.92	0.32	0.44	0.57	0.67
		PI	5.22	5.22	5.22	5.22	5.23	5.23	5.23	5.23	5.25	5.25	5.25	5.25	5.27	5.27	5.27	5.27
	95	TC	52114	53119	53609	54099	55550	55550	55550	56758	57217	57217	58100	57217	61631	61631	61631	61631
		S/T	0.86	1.00	1.00	1.00	0.65	0.78	0.92	1.00	0.54	0.67	0.82	0.95	0.32	0.44	0.56	0.70
		PI	5.72	5.72	5.72	5.72	5.74	5.74	5.74	5.74	5.74	5.74	5.76	5.74	5.82	5.82	5.82	5.82
	104	TC	48499	49307	49792	50276	51766	51766	52216	53089	53416	53416	53893	53867	57605	57605	57605	57605
		S/T	0.89	1.00	1.00	1.00	0.66	0.83	0.97	1.00	0.56	0.70	0.85	1.00	0.31	0.46	0.59	1.00
		PI	6.32	6.32	6.32	6.32	6.34	6.34	6.34	6.34	6.35	6.35	6.36	6.35	6.42	6.42	6.42	6.42
	115	TC	44844	45430	45915	46400	47952	47952	48946	49431	49605	49605	49605	50600	53582	53582	53582	53582
		S/T	0.93	1.00	1.00	1.00	0.67	0.84	1.00	1.00	0.57	0.71	0.88	1.00	0.31	0.46	0.59	1.00
		PI	7.02	7.02	7.02	7.02	7.05	7.05	7.05	7.05	7.07	7.07	7.07	7.07	7.14	7.14	7.14	7.14
	122	TC	42128	42516	42904	43292	45139	45139	46134	46723	46594	46594	46594	47589	50575	50575	50575	50575
		S/T	0.95	1.00	1.00	1.00	0.69	0.85	1.00	1.00	0.57	0.74	0.90	1.00	0.32	0.46	0.60	1.00
		PI	7.60	7.60	7.60	7.60	7.63	7.63	7.63	7.63	7.65	7.65	7.65	7.65	7.71	7.71	7.71	7.71

LEGEND

TC - Total Cooling Capacity (BTU/hr)
S/T - Sensible Cooling Capacity Ratio
PI - Power Input (kW)

Gray shaded area is Extrapolated Data

HEATING PERFORMANCE AT INDOOR DRY BULB TEMPERATURE- 60K (Sheet 1 of 2)

AIRFLOW (CFM)	OUTDOOR (DB F)	TC: TOTAL CAPACITY IN BTU/HR				PI: TOTAL POWER IN KILOWATTS			
		Indoor Conditions (DB F)				Indoor Conditions (DB F)			
		60.8	68.0	71.6	75.2	60.8	68.0	71.6	75.2
1136	-22.0	25571	25260	25074	24950	3.07	3.16	3.17	3.20
	-10.0	29422	29065	28851	28708	3.59	3.70	3.71	3.75
	0.0	32631	32235	31998	31839	4.03	4.15	4.16	4.21
	5.0	34348	33931	33681	33514	4.27	4.40	4.41	4.46
	14.0	36677	36231	35964	35786	4.56	4.70	4.71	4.76
	17.0	38423	37957	37677	37490	4.84	4.99	5.00	5.06
	22.0	40831	40335	40038	39840	4.80	4.91	4.97	5.03
	27.0	43110	42516	42317	42020	4.76	4.87	4.92	4.98
	32.0	44795	44200	43903	43606	4.71	4.82	4.88	4.93
	37.0	48264	47570	47273	46975	4.71	4.82	4.88	4.93
	42.0	53516	52723	52426	52030	4.72	4.83	4.88	4.94
	44.6	59093	58218	56436	56040	4.73	4.86	4.89	4.95
	52.0	62673	61782	61386	60990	4.70	4.81	4.86	4.92
	57.0	66139	65248	64752	64356	4.68	4.79	4.84	4.89
	62.0	69604	68614	68119	67723	4.66	4.77	4.82	4.87
	64.4	71188	70297	69802	69307	4.65	4.76	4.81	4.86
1360	-22.0	26063	25753	25567	25443	3.09	3.19	3.20	3.24
	-10.0	29989	29632	29417	29275	3.62	3.74	3.75	3.79
	0.0	33260	32864	32626	32468	4.06	4.19	4.20	4.25
	5.0	35010	34593	34343	34176	4.31	4.45	4.46	4.51
	14.0	37383	36938	36671	36493	4.59	4.74	4.75	4.81
	17.0	39163	38697	38417	38231	4.88	5.04	5.05	5.11
	22.0	41624	41128	40831	40633	4.85	4.96	5.02	5.07
	27.0	44002	43407	43110	42813	4.80	4.91	4.97	5.03
	32.0	45687	45092	44795	44498	4.76	4.87	4.92	4.98
	37.0	49255	48561	48264	47867	4.76	4.87	4.93	4.98
	42.0	54606	53813	53417	53120	4.77	4.88	4.93	4.99
	44.6	60281	59406	57624	57228	4.78	4.91	4.94	5.00
	52.0	63960	63069	62673	62277	4.75	4.86	4.91	4.97
	57.0	67426	66535	66139	65644	4.73	4.84	4.89	4.94
	62.0	70990	70000	69604	69109	4.71	4.81	4.87	4.92
	64.4	72673	71683	71188	70693	4.70	4.80	4.86	4.91
1583	-22.0	26296	25986	25800	25614	3.12	3.22	3.24	3.27
	-10.0	30256	29900	29685	29471	3.66	3.78	3.79	3.83
	0.0	33557	33161	32924	32686	4.11	4.24	4.25	4.29
	5.0	35322	34906	34656	34406	4.35	4.49	4.51	4.55
	14.0	37717	37272	37005	36738	4.64	4.79	4.81	4.85
	17.0	39513	39047	38767	38488	4.93	5.09	5.11	5.16
	22.0	42020	41525	41227	40930	4.90	5.01	5.07	5.13
	27.0	44399	43804	43507	43209	4.85	4.96	5.02	5.08
	32.0	46182	45489	45191	44894	4.81	4.92	4.97	5.03
	37.0	49750	49056	48660	48363	4.81	4.92	4.98	5.03
	42.0	55102	54408	54012	53615	4.81	4.93	4.98	5.04
	44.6	60765	60000	58119	57723	4.83	4.96	4.99	5.05
	52.0	64554	63762	63267	62871	4.80	4.91	4.96	5.02
	57.0	68119	67228	66832	66337	4.78	4.89	4.94	4.99
	62.0	71683	70792	70297	69802	4.76	4.87	4.92	4.97
	64.4	73465	72475	71980	71485	4.75	4.85	4.91	4.96

Manufacturer reserves the right to change, at any time, specifications and designs without notice and without obligations.

HEATING PERFORMANCE AT INDOOR DRY BULB TEMPERATURE- 60K (Sheet 2 of 2)

AIRFLOW (CFM)	OUTDOOR (DB F)	TC: TOTAL CAPACITY IN BTU/HR				PI: TOTAL POWER IN KILOWATTS			
		Indoor Conditions (DB F)				Indoor Conditions (DB F)			
		60.8	68.0	71.6	75.2	60.8	68.0	71.6	75.2
1805	-22.0	26296	25986	25800	25614	3.12	3.22	3.24	3.27
	-10.0	30256	29900	29685	29471	3.66	3.78	3.79	3.83
	0.0	33557	33161	32924	32686	4.11	4.24	4.25	4.29
	5.0	35637	35221	34971	34637	4.39	4.54	4.56	4.60
	14.0	38054	37609	37342	36985	4.69	4.84	4.86	4.90
	17.0	39866	39400	39121	38747	4.98	5.14	5.17	5.21
	22.0	42420	41925	41627	41229	4.95	5.06	5.12	5.19
	27.0	44799	44204	43907	43609	4.90	5.01	5.07	5.13
	32.0	46683	45889	45591	45294	4.86	4.97	5.02	5.08
	37.0	50251	49557	49060	48863	4.86	4.97	5.03	5.08
	42.0	55602	55009	54613	54115	4.85	4.98	5.03	5.09
	44.6	61253	60600	58618	58222	4.88	5.01	5.04	5.10
	52.0	65154	64463	63867	63471	4.85	4.96	5.01	5.07
	57.0	68819	67928	67532	67037	4.83	4.94	4.99	5.04
	62.0	72383	71593	70997	70502	4.81	4.93	4.97	5.02
	64.4	74266	73276	72781	72286	4.80	4.90	4.96	5.01

Gray shaded area is Extrapolated Data

COOLING PERFORMANCE AT INDOOR DRY BULB TEMPERATURE- 60K HH (Sheet 1 of 4)																		
AIRFLOW (CFM)	OUTDOOR DB (F)	ID WB (F)	60.8				64.4				66.2				71.6			
		ID DB(F)	73.4	77.0	80.6	84.2	73.4	77.0	80.6	84.2	73.4	77.0	80.6	84.2	73.4	77.0	80.6	84.2
1136	-22	TC	46552	46614	46667	46730	49350	49408	49467	49525	52299	52367	52435	54754	54810	54858	54912	54967
		S/T	0.36	0.41	0.48	0.54	0.38	0.43	0.51	0.58	0.40	0.46	0.54	0.61	0.70	0.80	0.87	0.87
		PI	1.42	1.43	1.43	1.43	1.51	1.51	1.51	1.51	1.60	1.60	1.60	1.69	1.70	1.70	1.70	1.70
	-10	TC	45809	46614	45922	45984	48562	48620	48677	48735	51464	51531	51598	53917	53973	54021	54075	54130
		S/T	0.36	0.41	0.48	0.55	0.38	0.44	0.51	0.58	0.41	0.46	0.54	0.62	0.70	0.80	0.87	0.87
		PI	1.90	1.90	1.90	1.91	2.01	2.02	2.02	2.02	2.13	2.14	2.14	2.26	2.26	2.27	2.27	2.27
	0	TC	45190	46614	45301	45362	47906	47963	48019	48076	50769	50835	50901	53219	53276	53324	53378	53433
		S/T	0.36	0.41	0.48	0.55	0.38	0.44	0.51	0.58	0.41	0.46	0.54	0.62	0.71	0.81	0.87	0.87
		PI	2.30	2.30	2.30	2.31	2.44	2.44	2.44	2.44	2.58	2.58	2.59	2.73	2.74	2.74	2.74	2.75
	5	TC	44880	46614	44991	45052	47578	47634	47691	47747	50421	50486	50552	52871	52928	52975	53029	53084
		S/T	0.36	0.41	0.49	0.55	0.39	0.44	0.51	0.59	0.41	0.47	0.55	0.62	0.71	0.81	0.87	0.87
		PI	2.50	2.50	2.50	2.51	2.65	2.65	2.65	2.66	2.80	2.81	2.81	2.97	2.97	2.98	2.98	2.98
	14	TC	44323	46614	44433	44492	46987	47043	47099	47154	49795	49860	49924	52243	52300	52347	52402	52456
		S/T	0.37	0.42	0.49	0.56	0.39	0.44	0.52	0.59	0.41	0.47	0.55	0.62	0.71	0.81	0.87	0.87
		PI	2.85	2.86	2.86	2.86	3.02	3.03	3.03	3.04	3.21	3.21	3.21	3.39	3.40	3.40	3.41	3.41
	23	TC	43221	46614	43328	43386	45819	45873	45927	45982	48557	48620	48683	51002	51058	51106	51160	51215
		S/T	0.37	0.42	0.49	0.56	0.39	0.44	0.52	0.59	0.41	0.47	0.55	0.63	0.72	0.82	0.87	0.87
		PI	2.86	2.87	2.87	2.87	3.04	3.04	3.04	3.05	3.22	3.22	3.22	3.41	3.41	3.41	3.42	3.42
	32	TC	41846	46614	41949	42006	44361	44414	44466	44519	47012	47073	47134	49453	49510	49557	49612	49666
		S/T	0.37	0.42	0.49	0.56	0.39	0.45	0.52	0.60	0.42	0.47	0.55	0.63	0.72	0.82	0.87	0.87
		PI	2.70	2.70	2.71	2.71	2.86	2.87	2.87	2.87	3.03	3.04	3.04	3.21	3.22	3.22	3.22	3.23
	41	TC	39866	46614	39965	40019	42263	42313	42363	42413	44788	44846	44905	47223	47280	47328	47382	47437
		S/T	0.37	0.42	0.50	0.56	0.39	0.45	0.52	0.60	0.42	0.48	0.56	0.63	0.72	0.82	0.87	0.87
		PI	2.60	2.60	2.61	2.61	2.76	2.76	2.76	2.77	2.92	2.93	2.93	3.09	3.10	3.10	3.10	3.11
	50	TC	38264	46614	38359	38410	40564	40612	40660	40708	42988	43044	43100	45419	45475	45523	45577	45632
		S/T	0.37	0.43	0.50	0.57	0.40	0.45	0.53	0.60	0.42	0.48	0.56	0.64	0.73	0.83	0.87	0.87
		PI	2.59	2.59	2.59	2.60	2.74	2.75	2.75	2.75	2.91	2.91	2.91	3.08	3.08	3.09	3.09	3.09
	59	TC	38021	46614	38115	38166	40306	40354	40402	40450	42715	42770	42826	45145	45201	45249	45303	45358
		S/T	0.38	0.43	0.50	0.57	0.40	0.45	0.53	0.60	0.42	0.48	0.56	0.64	0.73	0.83	0.87	0.87
		PI	2.68	2.69	2.69	2.69	2.84	2.85	2.85	2.85	3.01	3.02	3.02	3.19	3.19	3.20	3.20	3.21
	68	TC	37778	46614	37871	37922	40048	40096	40143	40191	42441	42496	42552	44871	44927	44975	45029	45084
		S/T	0.38	0.43	0.50	0.57	0.40	0.46	0.53	0.61	0.42	0.48	0.56	0.64	0.73	0.84	0.87	0.87
		PI	2.78	2.78	2.78	2.79	2.94	2.95	2.95	2.95	3.12	3.12	3.13	3.30	3.31	3.31	3.32	3.32
	77	TC	37534	46614	37627	37678	39790	39837	39885	39932	42168	42223	42278	44597	44653	44701	44755	44810
		S/T	0.39	0.44	0.52	0.59	0.41	0.47	0.55	0.62	0.43	0.50	0.58	0.66	0.75	0.86	0.98	1.00
		PI	2.87	2.88	2.88	2.88	3.05	3.05	3.05	3.06	3.23	3.23	3.24	3.42	3.42	3.43	3.43	3.43
	86	TC	36974	46614	37065	37115	39196	39243	39289	39336	41539	41593	41647	43966	44022	44070	44124	44179
		S/T	0.39	0.45	0.52	0.60	0.42	0.47	0.55	0.63	0.44	0.50	0.59	0.67	0.76	0.87	0.99	1.00
		PI	4.00	4.00	4.01	4.01	4.24	4.24	4.25	4.25	4.49	4.50	4.50	4.76	4.76	4.77	4.77	4.78
	95	TC	36658	46614	36748	36798	38861	38907	38953	38999	41183	41237	41290	43609	43666	43713	43768	43822
		S/T	0.40	0.46	0.54	0.61	0.43	0.49	0.57	0.65	0.45	0.52	0.60	0.69	0.78	0.89	1.00	1.00
		PI	4.33	4.34	4.34	4.35	4.59	4.60	4.60	4.61	4.87	4.87	4.88	5.15	5.16	5.16	5.17	5.18
	104	TC	29896	46614	29970	30010	31693	31731	31768	31806	33587	33631	33674	35993	36050	36097	36152	36206
		S/T	0.42	0.48	0.56	0.64	0.45	0.51	0.60	0.68	0.47	0.54	0.63	0.72	0.82	0.94	1.00	1.00
		PI	3.62	3.63	3.63	3.63	3.84	3.84	3.85	3.85	4.07	4.07	4.08	4.35	4.36	4.36	4.37	4.38
	115	TC	24382	46614	24442	24475	25847	25878	25908	25939	27392	27427	27463	29782	29839	29886	29940	29995
		S/T	0.43	0.49	0.57	0.65	0.45	0.52	0.60	0.69	0.48	0.55	0.64	0.73	0.83	0.95	1.00	1.00
		PI	3.03	3.03	3.03	3.04	3.21	3.21	3.22	3.22	3.40	3.40	3.41	3.55	3.56	3.56	3.57	3.58
	122	TC	19885	46614	19934	19960	21080	21105	21130	21155	22339	22368	22397	25070	25135	25190	25252	25315
		S/T	0.44	0.50	0.59	0.67	0.47	0.53	0.63	0.71	0.50	0.57	0.66	0.76	0.86	0.98	1.00	1.00
		PI	2.53	2.53	2.54	2.54	2.68	2.68	2.69	2.69	2.84	2.85	2.85	3.01	3.01	3.02	3.02	3.02

Manufacturer reserves the right to change, at any time, specifications and designs without notice and without obligations.

COOLING PERFORMANCE AT INDOOR DRY BULB TEMPERATURE- 60K HH (Sheet 2 of 4)																		
AIRFLOW (CFM)	OUTDOOR DB (F)	ID WB (F)	60.8				64.4				66.2				71.6			
		ID DB(F)	73.4	77.0	80.6	84.2	73.4	77.0	80.6	84.2	73.4	77.0	80.6	84.2	73.4	77.0	80.6	84.2
1360	-22	TC	55883	46614	56021	56096	59273	59327	59382	59437	62025	62089	62152	64901	64968	65024	65089	65154
		S/T	0.41	0.47	0.55	0.63	0.44	0.50	0.58	0.67	0.46	0.53	0.62	0.71	0.80	0.92	1.00	1.00
		PI	1.63	1.64	1.64	1.64	1.73	1.73	1.74	1.74	1.83	1.84	1.84	1.94	1.95	1.95	1.95	1.95
	-10	TC	54949	46614	55085	55159	58281	58336	58390	58445	61034	61097	61161	63909	63976	64033	64097	64162
		S/T	0.42	0.47	0.55	0.63	0.44	0.50	0.59	0.67	0.47	0.53	0.62	0.71	0.81	0.92	1.00	1.00
		PI	2.18	2.18	2.18	2.19	2.31	2.31	2.32	2.32	2.45	2.45	2.45	2.59	2.60	2.60	2.60	2.61
	0	TC	54172	46614	54305	54379	57454	57509	57564	57619	60207	60270	60334	63083	63150	63206	63271	63335
		S/T	0.42	0.48	0.56	0.64	0.44	0.51	0.59	0.67	0.47	0.54	0.63	0.71	0.81	0.93	1.00	1.00
		PI	2.63	2.64	2.64	2.64	2.79	2.80	2.80	2.80	2.96	2.96	2.97	3.13	3.14	3.14	3.15	3.15
	5	TC	53783	46614	53916	53988	57041	57096	57150	57205	59794	59857	59921	62669	62737	62793	62857	62922
		S/T	0.42	0.48	0.56	0.64	0.44	0.51	0.59	0.68	0.47	0.54	0.63	0.72	0.82	0.93	1.00	1.00
		PI	2.86	2.87	2.87	2.87	3.03	3.04	3.04	3.04	3.22	3.22	3.22	3.40	3.41	3.41	3.42	3.42
	14	TC	53083	46614	53214	53285	56297	56352	56407	56461	59050	59113	59177	61926	61993	62049	62113	62178
		S/T	0.42	0.48	0.56	0.64	0.45	0.51	0.60	0.68	0.47	0.54	0.63	0.72	0.82	0.94	1.00	1.00
		PI	3.27	3.28	3.28	3.28	3.47	3.47	3.48	3.48	3.68	3.68	3.68	3.89	3.90	3.90	3.91	3.91
	23	TC	51698	46614	51825	51895	54826	54880	54935	54990	57578	57642	57705	60454	60521	60577	60642	60706
		S/T	0.42	0.48	0.56	0.64	0.45	0.51	0.60	0.68	0.48	0.54	0.63	0.72	0.82	0.94	1.00	1.00
		PI	3.28	3.29	3.29	3.30	3.48	3.48	3.49	3.49	3.69	3.69	3.70	3.91	3.91	3.92	3.92	3.92
	32	TC	49970	46614	50094	50161	52990	53045	53099	53154	55743	55806	55870	58618	58685	58742	58806	58871
		S/T	0.43	0.49	0.57	0.65	0.45	0.51	0.60	0.69	0.48	0.55	0.64	0.73	0.83	0.95	1.00	1.00
		PI	3.10	3.10	3.10	3.11	3.28	3.29	3.29	3.29	3.48	3.48	3.49	3.68	3.69	3.69	3.70	3.70
	41	TC	47483	46614	47600	47665	50347	50402	50456	50511	53100	53163	53227	55975	56043	56099	56163	56228
		S/T	0.43	0.49	0.57	0.65	0.45	0.52	0.60	0.69	0.48	0.55	0.64	0.73	0.83	0.95	1.00	1.00
		PI	2.98	2.99	2.99	2.99	3.16	3.17	3.17	3.17	3.35	3.35	3.36	3.55	3.55	3.56	3.56	3.56
	50	TC	45470	46614	45582	45644	48208	48262	48317	48372	50960	51024	51087	53836	53903	53960	54024	54089
		S/T	0.43	0.49	0.57	0.65	0.46	0.52	0.61	0.69	0.48	0.55	0.64	0.73	0.84	0.95	1.00	1.00
		PI	2.97	2.97	2.97	2.98	3.15	3.15	3.15	3.16	3.33	3.34	3.34	3.53	3.53	3.54	3.54	3.55
	59	TC	45164	46614	45276	45337	47883	47938	47992	48047	50636	50699	50763	53511	53578	53635	53699	53764
		S/T	0.43	0.49	0.58	0.66	0.46	0.52	0.61	0.70	0.49	0.55	0.65	0.74	0.84	0.96	1.00	1.00
		PI	3.08	3.08	3.08	3.09	3.26	3.26	3.27	3.27	3.46	3.46	3.46	3.66	3.66	3.67	3.67	3.68
	68	TC	44859	46614	44969	45030	47558	47613	47667	47722	50311	50374	50438	53186	53254	53310	53374	53439
		S/T	0.43	0.50	0.58	0.66	0.46	0.52	0.61	0.70	0.49	0.56	0.65	0.74	0.85	0.96	1.00	1.00
		PI	3.18	3.19	3.19	3.20	3.38	3.38	3.38	3.39	3.58	3.58	3.59	3.79	3.79	3.80	3.80	3.81
	77	TC	44553	46614	44663	44723	47233	47288	47343	47397	49986	50049	50113	52862	52929	52985	53050	53114
		S/T	0.45	0.51	0.59	0.68	0.47	0.54	0.63	0.72	0.50	0.57	0.67	0.76	0.87	0.99	1.00	1.00
		PI	3.29	3.30	3.30	3.31	3.49	3.50	3.50	3.50	3.70	3.71	3.71	3.92	3.92	3.93	3.93	3.94
	86	TC	43849	46614	43957	44017	46486	46540	46595	46650	49238	49302	49365	52114	52181	52237	52302	52366
		S/T	0.45	0.52	0.60	0.69	0.48	0.55	0.64	0.73	0.51	0.58	0.68	0.77	0.88	1.00	1.00	1.00
		PI	4.58	4.59	4.60	4.60	4.86	4.87	4.87	4.88	5.15	5.16	5.16	5.45	5.46	5.47	5.47	5.48
	95	TC	43452	46614	43559	43618	46063	46118	46172	46227	48816	48879	48943	51691	51758	51815	51879	51944
		S/T	0.46	0.53	0.62	0.70	0.49	0.56	0.65	0.75	0.52	0.59	0.69	0.79	0.90	1.00	1.00	1.00
		PI	4.97	4.97	4.98	4.99	5.27	5.27	5.28	5.28	5.58	5.59	5.59	5.91	5.92	5.92	5.93	5.94
	104	TC	34956	46614	35042	35089	37036	37090	37145	37200	39788	39852	39915	42664	42731	42787	42852	42916
		S/T	0.49	0.55	0.65	0.74	0.52	0.59	0.69	0.78	0.55	0.62	0.73	0.83	0.95	1.00	1.00	1.00
		PI	4.15	4.16	4.16	4.17	4.40	4.41	4.41	4.42	4.66	4.67	4.68	4.99	5.00	5.00	5.01	5.02
	115	TC	28027	46614	28097	28134	29673	29728	29782	29837	32426	32489	32553	35301	35369	35425	35489	35554
		S/T	0.49	0.56	0.66	0.75	0.52	0.59	0.70	0.79	0.55	0.63	0.74	0.84	0.96	1.00	1.00	1.00
		PI	3.47	3.48	3.48	3.48	3.68	3.68	3.69	3.69	3.90	3.90	3.91	4.07	4.08	4.09	4.09	4.10
	122	TC	21979	46614	22034	22063	23230	23293	23356	23419	26402	26475	26548	29716	29793	29858	29933	30007
		S/T	0.51	0.58	0.68	0.77	0.54	0.62	0.72	0.82	0.57	0.65	0.76	0.87	0.99	1.00	1.00	1.00
		PI	2.90	2.90	2.91	2.91	3.08	3.08	3.08	3.09	3.26	3.26	3.27	3.45	3.46	3.46	3.46	3.47

Manufacturer reserves the right to change, at any time, specifications and designs without notice and without obligations.

COOLING PERFORMANCE AT INDOOR DRY BULB TEMPERATURE- 60K HH (Sheet 3 of 4)																		
AIRFLOW (CFM)	OUTDOOR DB (F)	ID WB (F)	60.8				64.4				66.2				71.6			
		ID DB(F)	73.4	77.0	80.6	84.2	73.4	77.0	80.6	84.2	73.4	77.0	80.6	84.2	73.4	77.0	80.6	84.2
1583	-22	TC	64402	46614	64561	64648	68309	68372	68435	68498	71481	71554	71627	74795	74872	74937	75011	75086
		S/T	0.48	0.54	0.63	0.72	0.50	0.58	0.67	0.77	0.53	0.61	0.71	0.81	0.93	1.00	1.00	1.00
		PI	1.88	1.88	1.89	1.89	2.00	2.00	2.00	2.00	2.11	2.12	2.12	2.24	2.24	2.24	2.25	2.25
	-10	TC	63326	46614	63483	63568	67166	67229	67292	67355	70338	70411	70484	73652	73729	73794	73868	73943
		S/T	0.48	0.55	0.64	0.73	0.51	0.58	0.68	0.77	0.54	0.61	0.72	0.82	0.93	1.00	1.00	1.00
		PI	2.51	2.51	2.52	2.52	2.66	2.67	2.67	2.67	2.82	2.83	2.83	2.99	2.99	2.99	3.00	3.00
	0	TC	62430	46614	62584	62668	66213	66276	66339	66402	69385	69458	69532	72699	72777	72842	72916	72990
		S/T	0.48	0.55	0.64	0.73	0.51	0.58	0.68	0.78	0.54	0.62	0.72	0.82	0.94	1.00	1.00	1.00
		PI	3.04	3.04	3.04	3.05	3.22	3.22	3.23	3.23	3.41	3.42	3.42	3.61	3.62	3.62	3.62	3.63
	5	TC	61982	46614	62135	62218	65737	65800	65863	65926	68909	68982	69055	72223	72301	72365	72440	72514
		S/T	0.48	0.55	0.64	0.73	0.51	0.58	0.68	0.78	0.54	0.62	0.72	0.83	0.94	1.00	1.00	1.00
		PI	3.30	3.30	3.31	3.31	3.50	3.50	3.50	3.51	3.71	3.71	3.72	3.92	3.93	3.93	3.94	3.94
	14	TC	61175	46614	61326	61409	64880	64943	65006	65069	68052	68125	68198	71366	71443	71508	71582	71657
		S/T	0.49	0.55	0.65	0.74	0.51	0.59	0.69	0.78	0.55	0.62	0.73	0.83	0.95	1.00	1.00	1.00
		PI	3.77	3.78	3.78	3.78	4.00	4.00	4.01	4.01	4.24	4.24	4.25	4.49	4.49	4.50	4.50	4.51
	23	TC	59579	46614	59726	59806	63184	63246	63309	63373	66356	66429	66502	69670	69747	69812	69886	69961
		S/T	0.49	0.56	0.65	0.74	0.52	0.59	0.69	0.79	0.55	0.63	0.73	0.83	0.95	1.00	1.00	1.00
		PI	3.78	3.79	3.79	3.80	4.01	4.02	4.02	4.03	4.25	4.26	4.26	4.50	4.51	4.51	4.52	4.52
	32	TC	57588	46614	57730	57808	61068	61131	61194	61257	64240	64313	64387	67554	67632	67697	67771	67845
		S/T	0.49	0.56	0.65	0.75	0.52	0.59	0.69	0.79	0.55	0.63	0.74	0.84	0.96	1.00	1.00	1.00
		PI	3.57	3.57	3.58	3.58	3.78	3.79	3.79	3.80	4.01	4.01	4.02	4.24	4.25	4.25	4.26	4.27
	41	TC	54722	46614	54857	54931	58022	58085	58148	58211	61195	61268	61341	64509	64586	64651	64725	64800
		S/T	0.49	0.56	0.66	0.75	0.52	0.60	0.70	0.79	0.55	0.63	0.74	0.84	0.96	1.00	1.00	1.00
		PI	3.44	3.44	3.45	3.45	3.64	3.65	3.65	3.66	3.86	3.87	3.87	4.09	4.09	4.10	4.10	4.11
	50	TC	52402	46614	52531	52602	55557	55620	55683	55746	58729	58802	58876	62043	62121	62185	62260	62334
		S/T	0.50	0.57	0.66	0.75	0.53	0.60	0.70	0.80	0.56	0.63	0.74	0.85	0.96	1.00	1.00	1.00
		PI	3.42	3.42	3.43	3.43	3.62	3.63	3.63	3.64	3.84	3.85	3.85	4.07	4.07	4.08	4.08	4.09
	59	TC	52049	46614	52178	52248	55183	55246	55309	55372	58355	58428	58501	61669	61746	61811	61885	61960
		S/T	0.50	0.57	0.66	0.76	0.53	0.60	0.70	0.80	0.56	0.64	0.75	0.85	0.97	1.00	1.00	1.00
		PI	3.54	3.55	3.55	3.56	3.76	3.76	3.77	3.77	3.98	3.99	3.99	4.22	4.22	4.23	4.23	4.24
	68	TC	51697	46614	51825	51895	54808	54871	54934	54997	57981	58054	58127	61294	61372	61437	61511	61586
		S/T	0.50	0.57	0.67	0.76	0.53	0.60	0.71	0.81	0.56	0.64	0.75	0.86	0.97	1.00	1.00	1.00
		PI	3.67	3.68	3.68	3.68	3.89	3.90	3.90	3.90	4.12	4.13	4.13	4.37	4.37	4.38	4.38	4.39
	77	TC	51345	46614	51472	51541	54434	54497	54560	54623	57606	57679	57753	60920	60998	61062	61137	61211
		S/T	0.51	0.59	0.69	0.78	0.54	0.62	0.73	0.83	0.58	0.66	0.77	0.88	1.00	1.00	1.00	1.00
		PI	3.80	3.80	3.81	3.81	4.02	4.03	4.03	4.04	4.26	4.27	4.28	4.52	4.52	4.53	4.53	4.54
	86	TC	50534	46614	50658	50727	53572	53635	53698	53761	56744	56817	56891	60058	60136	60201	60275	60349
		S/T	0.52	0.59	0.69	0.79	0.55	0.63	0.74	0.84	0.59	0.67	0.78	0.89	1.00	1.00	1.00	1.00
		PI	5.28	5.29	5.30	5.30	5.60	5.61	5.61	5.62	5.94	5.94	5.95	6.29	6.29	6.30	6.31	6.32
	95	TC	50076	46614	50199	50267	53085	53148	53211	53274	56257	56331	56404	59571	59649	59714	59788	59862
		S/T	0.53	0.61	0.71	0.81	0.57	0.65	0.75	0.86	0.60	0.68	0.80	0.91	0.64	0.74	0.85	0.97
		PI	5.72	5.73	5.74	5.75	6.07	6.07	6.08	6.09	6.43	6.44	6.45	6.81	6.82	6.83	6.83	6.84
	104	TC	40285	46614	40384	40439	42681	42744	42807	42870	45854	45927	46000	49168	49245	49310	49384	49459
		S/T	0.56	0.64	0.75	0.85	0.59	0.68	0.79	0.90	0.63	0.72	0.84	0.96	1.00	1.00	1.00	1.00
		PI	4.78	4.79	4.80	4.80	5.07	5.08	5.08	5.09	5.38	5.38	5.39	5.75	5.76	5.77	5.78	5.78
	115	TC	32300	46614	32380	32423	34197	34260	34323	34386	37369	37442	37515	40683	40760	40825	40899	40974
		S/T	0.57	0.65	0.76	0.86	0.60	0.69	0.80	0.91	0.64	0.73	0.85	0.97	1.00	1.00	1.00	1.00
		PI	4.00	4.00	4.01	4.01	4.24	4.24	4.25	4.26	4.49	4.50	4.50	4.69	4.70	4.71	4.72	4.73
	122	TC	25788	46614	25852	25887	27277	27340	27403	27466	30449	30522	30595	33763	33841	33905	33980	34054
		S/T	0.59	0.67	0.78	0.89	0.62	0.71	0.83	0.95	0.66	0.75	0.88	1.00	1.00	1.00	1.00	1.00
		PI	3.34	3.35	3.35	3.36	3.54	3.55	3.55	3.56	3.76	3.76	3.77	3.98	3.98	3.99	3.99	4.00

Manufacturer reserves the right to change, at any time, specifications and designs without notice and without obligations.

COOLING PERFORMANCE AT INDOOR DRY BULB TEMPERATURE- 60K HH (Sheet 4 of 4)																		
AIRFLOW (CFM)	OUTDOOR DB (F)	ID WB (F)	60.8				64.4				66.2				71.6			
		ID DB(F)	73.4	77.0	80.6	84.2	73.4	77.0	80.6	84.2	73.4	77.0	80.6	84.2	73.4	77.0	80.6	84.2
1805	-22	TC	71791	46614	71968	72065	76106	76196	76286	76377	80654	80759	80864	85405	85516	85609	85715	85822
		S/T	0.54	0.61	0.72	0.82	0.57	0.65	0.76	0.87	0.60	0.69	0.81	0.92	1.00	1.00	1.00	1.00
		PI	2.12	2.13	2.13	2.13	2.25	2.25	2.26	2.26	2.39	2.39	2.39	2.53	2.53	2.53	2.54	2.54
	-10	TC	70645	46614	70820	70915	74892	74980	75069	75158	79367	79470	79573	84042	84151	84243	84348	84453
		S/T	0.54	0.62	0.72	0.82	0.57	0.65	0.76	0.87	0.61	0.69	0.81	0.92	1.00	1.00	1.00	1.00
		PI	2.84	2.84	2.84	2.85	3.01	3.01	3.01	3.02	3.19	3.19	3.19	3.37	3.38	3.38	3.39	3.39
	0	TC	69691	46614	69863	69957	73879	73967	74055	74143	78294	78396	78498	82906	83014	83104	83208	83311
		S/T	0.54	0.62	0.73	0.83	0.58	0.66	0.77	0.88	0.61	0.70	0.82	0.93	1.00	1.00	1.00	1.00
		PI	3.43	3.43	3.44	3.44	3.63	3.64	3.64	3.65	3.85	3.86	3.86	4.08	4.08	4.09	4.09	4.10
	5	TC	69213	46614	69384	69478	73373	73460	73547	73635	77758	77859	77960	82338	82446	82535	82638	82741
		S/T	0.55	0.62	0.73	0.83	0.58	0.66	0.77	0.88	0.61	0.70	0.82	0.93	1.00	1.00	1.00	1.00
		PI	3.72	3.73	3.73	3.74	3.95	3.95	3.96	3.96	4.18	4.19	4.19	4.43	4.44	4.44	4.45	4.45
	14	TC	68354	46614	68523	68615	72463	72548	72634	72721	76793	76892	76992	81316	81422	81511	81612	81714
		S/T	0.55	0.63	0.73	0.83	0.58	0.66	0.78	0.88	0.62	0.70	0.82	0.94	1.00	1.00	1.00	1.00
		PI	4.26	4.26	4.27	4.27	4.51	4.52	4.52	4.53	4.78	4.79	4.79	5.06	5.07	5.08	5.08	5.09
	23	TC	66654	46614	66819	66909	70660	70744	70828	70912	74883	74980	75078	79294	79397	79483	79582	79681
		S/T	0.55	0.63	0.73	0.84	0.58	0.67	0.78	0.89	0.62	0.71	0.83	0.94	1.00	1.00	1.00	1.00
		PI	4.27	4.28	4.28	4.29	4.53	4.53	4.54	4.54	4.80	4.81	4.81	5.08	5.09	5.09	5.10	5.11
	32	TC	64534	46614	64693	64781	68413	68494	68575	68656	72501	72595	72689	76772	76871	76955	77051	77147
		S/T	0.55	0.63	0.74	0.84	0.59	0.67	0.78	0.89	0.62	0.71	0.83	0.95	1.00	1.00	1.00	1.00
		PI	4.03	4.03	4.04	4.04	4.27	4.28	4.28	4.29	4.53	4.53	4.54	4.79	4.80	4.80	4.81	4.82
	41	TC	61481	46614	61633	61716	65176	65254	65331	65409	69071	69161	69251	73140	73235	73315	73406	73497
		S/T	0.56	0.63	0.74	0.85	0.59	0.67	0.79	0.90	0.63	0.71	0.83	0.95	1.00	1.00	1.00	1.00
		PI	3.88	3.89	3.89	3.89	4.11	4.12	4.12	4.13	4.36	4.36	4.37	4.62	4.62	4.63	4.63	4.64
	50	TC	59010	46614	59156	59236	62557	62631	62705	62780	66295	66381	66468	70200	70292	70368	70456	70543
		S/T	0.56	0.64	0.75	0.85	0.59	0.68	0.79	0.90	0.63	0.72	0.84	0.96	1.00	1.00	1.00	1.00
		PI	3.86	3.87	3.87	3.87	4.09	4.10	4.10	4.11	4.34	4.34	4.35	4.59	4.60	4.60	4.61	4.61
	59	TC	58635	46614	58780	58859	62159	62233	62307	62381	65874	65959	66045	69754	69845	69921	70008	70095
		S/T	0.56	0.64	0.75	0.85	0.60	0.68	0.79	0.91	0.63	0.72	0.84	0.96	1.00	1.00	1.00	1.00
		PI	4.00	4.01	4.01	4.02	4.24	4.25	4.25	4.26	4.50	4.50	4.51	4.76	4.77	4.77	4.78	4.78
	68	TC	58260	46614	58404	58482	61761	61835	61908	61981	65452	65537	65622	69308	69398	69473	69560	69646
		S/T	0.57	0.64	0.75	0.86	0.60	0.68	0.80	0.91	0.64	0.72	0.85	0.97	1.00	1.00	1.00	1.00
		PI	4.14	4.15	4.15	4.16	4.39	4.40	4.40	4.41	4.66	4.66	4.67	4.93	4.94	4.94	4.95	4.95
	77	TC	57885	46614	58028	58106	61364	61436	61509	61582	65031	65115	65200	68861	68951	69026	69112	69198
		S/T	0.58	0.66	0.77	0.88	0.62	0.70	0.82	0.93	0.65	0.74	0.87	0.99	1.00	1.00	1.00	1.00
		PI	4.29	4.29	4.30	4.30	4.54	4.55	4.55	4.56	4.81	4.82	4.83	5.10	5.10	5.11	5.12	5.12
	86	TC	57021	46614	57162	57239	60448	60519	60591	60663	64060	64143	64227	67834	67922	67996	68080	68165
		S/T	0.59	0.67	0.78	0.89	0.62	0.71	0.83	0.95	0.66	0.75	0.88	1.00	1.00	1.00	1.00	1.00
		PI	5.97	5.97	5.98	5.99	6.32	6.33	6.34	6.35	6.70	6.71	6.72	7.10	7.11	7.11	7.12	7.13
	95	TC	56533	46614	56672	56749	59931	60002	60073	60144	63512	63594	63677	67253	67341	67414	67498	67582
		S/T	0.60	0.69	0.80	0.92	0.64	0.73	0.85	0.97	0.68	0.75	0.90	1.00	1.00	1.00	1.00	1.00
		PI	6.46	6.47	6.48	6.49	6.85	6.86	6.87	6.87	7.26	7.27	7.28	7.69	7.70	7.71	7.72	7.72
	104	TC	46105	46614	46219	46281	48876	48934	48992	49050	51797	51864	51932	54848	54920	54979	55048	55116
		S/T	0.63	0.72	0.84	0.96	0.67	0.75	0.89	1.00	0.71	0.75	0.95	1.00	1.00	1.00	1.00	1.00
		PI	5.40	5.41	5.41	5.42	5.73	5.73	5.74	5.75	6.07	6.08	6.08	6.43	6.43	6.44	6.45	6.46
	115	TC	37601	46614	37694	37745	39861	39908	39955	40003	42243	42298	42353	44731	44790	44838	44894	44950
		S/T	0.64	0.73	0.85	0.97	0.68	0.75	0.91	1.00	0.72	0.75	0.96	1.00	1.00	1.00	1.00	1.00
		PI	4.52	4.52	4.53	4.53	4.79	4.79	4.80	4.80	5.07	5.08	5.09	5.37	5.38	5.38	5.39	5.40
	122	TC	30665	46614	30741	30783	32509	32547	32586	32624	34451	34496	34541	36481	36528	36568	36613	36659
		S/T	0.66	0.75	0.88	1.00	0.70	0.75	0.94	1.00	0.75	0.75	0.99	1.00	1.00	1.00	1.00	1.00
		PI	3.77	3.78	3.78	3.79	4.00	4.01	4.01	4.02	4.24	4.25	4.25	4.49	4.50	4.50	4.51	4.51

LEGEND

TC - Total Cooling Capacity (BTU/hr)
S/T - Sensible Cooling Capacity Ratio
PI - Power Input (kW)

Gray shaded area is Extrapolated Data

HEATING PERFORMANCE AT INDOOR DRY BULB TEMPERATURE- 60K HH (Sheet 1 of 2)									
AIRFLOW (CFM)	OUTDOOR (DB F)	TC: TOTAL CAPACITY IN BTU/HR				PI: TOTAL POWER IN KILOWATTS			
		Indoor Conditions (DB F)				Indoor Conditions (DB F)			
		60.8	68.0	71.6	75.2	60.8	68.0	71.6	75.2
1136	-22.0	40717	41548	42396	42824	8.83	8.88	8.92	8.97
	-10.0	41160	42000	42857	43290	8.25	8.29	8.33	8.37
	0.0	41528	42376	43241	43677	7.76	7.80	7.84	7.87
	5.0	41713	42564	43433	43871	7.51	7.55	7.59	7.63
	14.0	42045	42903	43778	44220	7.07	7.11	7.14	7.18
	17.0	42155	43016	43893	44337	6.93	6.96	7.00	7.03
	22.0	44258	45161	46083	46548	6.72	6.75	6.78	6.82
	27.0	46360	47306	48272	48759	6.51	6.54	6.57	6.60
	32.0	48463	49452	50461	50971	6.30	6.33	6.36	6.39
	37.0	50565	51597	52650	53182	6.09	6.12	6.15	6.18
	42.0	51571	52624	53698	54240	5.97	6.00	6.03	6.06
	44.6	51974	53035	54117	54664	5.92	5.95	5.98	6.01
	52.0	53584	54678	55794	56357	5.74	5.77	5.80	5.83
	57.0	54591	55705	56842	57416	5.62	5.65	5.68	5.71
	62.0	55597	56732	57889	58474	5.51	5.54	5.56	5.59
	64.4	56000	57142	58309	58898	5.46	5.49	5.52	5.54
1360	-22.0	46013	46952	47910	48394	8.92	8.97	9.01	9.06
	-10.0	46513	47462	48431	48920	8.33	8.37	8.41	8.46
	0.0	46930	47888	48865	49359	7.84	7.87	7.91	7.95
	5.0	47138	48100	49082	49578	7.59	7.63	7.67	7.70
	14.0	47513	48483	49472	49972	7.14	7.18	7.22	7.25
	17.0	47638	48611	49603	50104	7.00	7.03	7.07	7.10
	22.0	50014	51035	52076	52602	6.78	6.82	6.85	6.89
	27.0	52390	53459	54550	55101	6.57	6.61	6.64	6.67
	32.0	54766	55884	57024	57600	6.36	6.39	6.42	6.46
	37.0	57142	58308	59498	60099	6.15	6.18	6.21	6.24
	42.0	58279	59469	60682	61295	6.03	6.06	6.09	6.12
	44.6	58734	59933	61156	61774	5.98	6.01	6.04	6.07
	52.0	60554	61790	63051	63688	5.80	5.83	5.86	5.88
	57.0	61691	62950	64235	64884	5.68	5.71	5.74	5.77
	62.0	62828	64111	65419	66080	5.56	5.59	5.62	5.65
	64.4	63283	64575	65893	66558	5.52	5.54	5.57	5.60

Manufacturer reserves the right to change, at any time, specifications and designs without notice and without obligations.

HEATING PERFORMANCE AT INDOOR DRY BULB TEMPERATURE- 60K HH (Sheet 2 of 2)									
AIRFLOW (CFM)	OUTDOOR (DB F)	TC: TOTAL CAPACITY IN BTU/HR				PI: TOTAL POWER IN KILOWATTS			
		Indoor Conditions (DB F)				Indoor Conditions (DB F)			
		60.8	68.0	71.6	75.2	60.8	68.0	71.6	75.2
1583	-22.0	51998	53059	54142	54689	9.01	9.06	9.10	9.15
	-10.0	52563	53636	54730	55283	8.41	8.46	8.50	8.54
	0.0	53034	54116	55221	55779	7.91	7.95	7.99	8.03
	5.0	53269	54357	55466	56026	7.67	7.70	7.74	7.78
	14.0	53693	54789	55907	56472	7.22	7.25	7.29	7.33
	17.0	53835	54933	56054	56620	7.07	7.10	7.14	7.17
	22.0	56519	57673	58850	59444	6.85	6.89	6.92	6.96
	27.0	59204	60413	61646	62268	6.64	6.67	6.71	6.74
	32.0	61889	63152	64441	65092	6.42	6.46	6.49	6.52
	37.0	64574	65892	67237	67916	6.21	6.24	6.27	6.30
	42.0	65860	67204	68575	69268	6.09	6.12	6.15	6.18
	44.6	66374	67728	69110	69809	6.04	6.07	6.11	6.14
	52.0	68430	69827	71252	71971	5.86	5.89	5.91	5.94
	57.0	69715	71138	72590	73323	5.74	5.77	5.80	5.82
	62.0	71001	72449	73928	74675	5.62	5.65	5.68	5.70
	64.4	71515	72974	74463	75216	5.57	5.60	5.63	5.66
1805	-22.0	57563	58738	59937	60542	9.10	9.15	9.19	9.24
	-10.0	58189	59376	60588	61200	8.50	8.54	8.58	8.63
	0.0	58710	59908	61131	61748	7.99	8.03	8.07	8.11
	5.0	58971	60174	61402	62023	7.74	7.78	7.82	7.86
	14.0	59440	60653	61891	62516	7.29	7.33	7.36	7.40
	17.0	59596	60813	62054	62681	7.14	7.17	7.21	7.25
	22.0	62569	63846	65149	65807	6.92	6.96	6.99	7.03
	27.0	65541	66879	68243	68933	6.70	6.74	6.77	6.81
	32.0	68513	69912	71338	72059	6.49	6.52	6.55	6.59
	37.0	71486	72945	74433	75185	6.27	6.30	6.33	6.37
	42.0	72908	74396	75915	76682	6.15	6.18	6.21	6.25
	44.6	73478	74977	76507	77280	6.10	6.14	6.17	6.20
	52.0	75754	77300	78878	79674	5.91	5.94	5.97	6.00
	57.0	77177	78752	80359	81171	5.80	5.82	5.85	5.88
	62.0	78600	80204	81841	82667	5.68	5.70	5.73	5.76
	64.4	79169	80784	82433	83266	5.63	5.66	5.68	5.71

Gray shaded area is Extrapolated Data

APPLICATION DATA

Unit Selections

Select equipment that either matches or supports slightly more than the anticipated peak load. This provides better humidity control, fewer unit cycles, and less part-load operation.

For units used in spaces with high sensible loads, base equipment selection on unit sensible load, not on total anticipated load. Adjust for anticipated room wet bulb temperature to avoid undersizing the equipment.

Unit Mounting (Outdoor)

Refer to the unit's installation instructions for further details.

Unit leveling - For reliable operation, units should be level in all planes.

Clearance - Minimum clearance (see Fig. 5 — on page 8) must be provided for airflow. The condensing units are designed for free-flow application. Air inlets and outlets should not be restricted.

Unit location - A location which is convenient to installation and not exposed to strong winds. A location that can bear the weight of the outdoor unit and where the outdoor unit can be mounted in a level position.

Do not install the indoor or outdoor units in a location with special environmental conditions. For those applications, contact your sales representative.

System Operating Conditions

OPERATING RANGE MIN/MAX °F / °C

All High Heat Units:

- **Cooling: -22/130 (-30/55)**
- **Heating: -22/86 (-30/30)**

Regular Heat Units:

- **Cooling: 5/130 (-15/55)**
- **Heating: -5/86 (-20/30)**

NOTE: Without intervention, the unit may continue to run at temperatures outside of the specified operating temperatures. However, operation outside of the specified temperature range may result in decreased performance and may cause damage to the unit.

METERING DEVICES

The metering device is located in the indoor unit.

DRAIN CONNECTIONS

Install drains to meet the local sanitation codes.

REFRIGERANT LINES

General refrigerant line sizing:

1. The outdoor units are shipped with a full charge of R410A refrigerant. All charges, line sizing, and capacities are based on runs of 25 ft. (7.6 m). For runs over 25 ft. (7.6 m), add 0.69 oz/ft (65 g/m) of refrigerant charge.
2. Refrigerant lines should not be buried in the ground. If it is necessary to bury the lines, do not bury more than 36-in (914 mm). Provide a minimum 6-in (152 mm) vertical rise to the service valves to prevent refrigerant migration.
3. Insulate the suction line with a minimum 3/8-in (10 mm) wall thermal pipe insulation. Follow local codes.
4. Special consideration should be given to isolating the interconnecting tubing from the building structure. Isolate the tubing so vibration or noise is not transmitted into the structure.

⚠ CAUTION

It is **REQUIRED** to flow Nitrogen while brazing the line set or line set adapter(s) for these condensing units.

WIRING

All wires must be sized per NEC (National Electrical Code) or CEC (Canadian Electrical Code) and local codes. Use Electrical Data table MCA (minimum circuit amps) and MOCP (maximum over current protection) to correctly size the wires and the disconnect fuse or breakers respectively.

Power wiring

1. Remove the electric cover of the outdoor unit.
2. Connect the fork terminal to the terminals.
3. Match the wire labels with the labels on the terminal block.
4. Firmly screw the fork terminal of each wire to its corresponding terminal.
5. Insulate unused wires with electrical tape. Keep them away from any electrical or metal parts.
6. Reinstall the cover of the electric control box

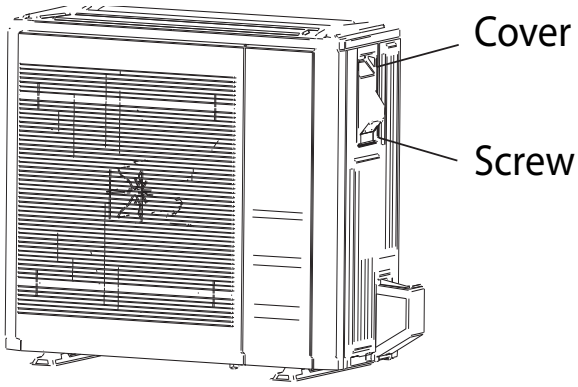

Fig. 1 — Remove Electrical Cover

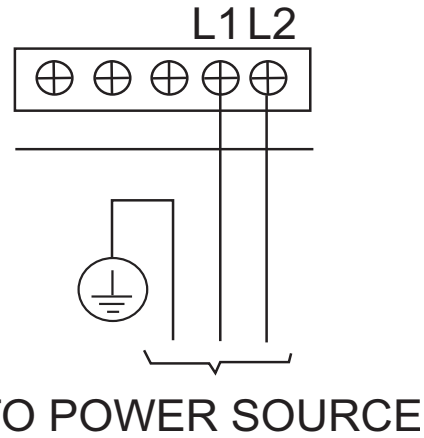

Fig. 2 —Match Fork Terminal to Terminal Labels

Communication Wiring

There are two options available to establish communication between the outdoor unit and approved indoor unit.

OPTIONS	COMMUNICATION TYPE	RECOMMENDED CABLE SIZE
1	Non-Polarity RS485 Communication (S1 - S2)	16 AWG (stranded shielded)
2	24V communication	18 AWG 8 conductor thermostat wire

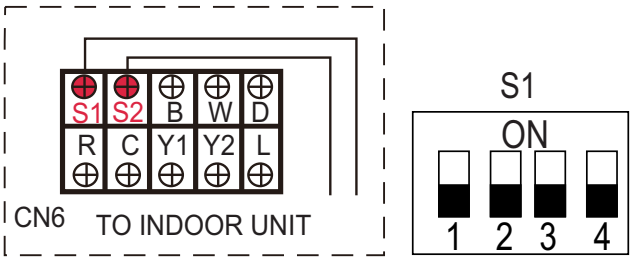

Fig. 3 —Option 1: Non-polarity RS485 Communication

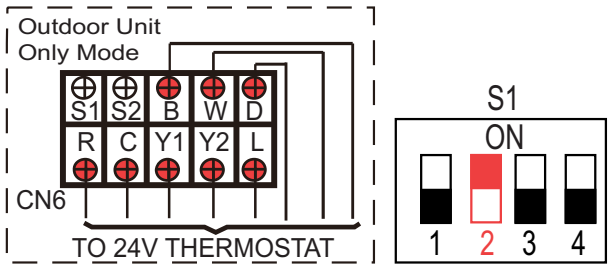

Fig. 4 —Option 2: 24V Communication

NOTES:

1. Do not use the thermostat wire for any RS-485 connection between indoor and outdoor units.
2. All connections between the indoor and outdoor units must be made as shown in Figures 3 - 4.

CAUTION

Power needs to be **OFF** before dip switch adjustments.

WARNING

EQUIPMENT DAMAGE HAZARD

Failure to follow this caution may result in equipment damage or improper operation. Wires should be sized based on NEDC and local codes.

CAUTION

EQUIPMENT DAMAGE HAZARD

Failure to follow this caution may result in equipment damage or improper operation. Be sure to comply with local codes while running wire from the indoor unit to the outdoor unit. Every wire must be connected firmly. Loose wiring may cause the terminal to overheat or result in unit malfunction. A fire hazard may also exist. Ensure all wiring is tightly connected.

No wire should touch the refrigerant tubing, compressor or any moving parts. Disconnecting means must be provided and shall be located within sight and readily accessible from the air conditioner. Connecting cable with conduit shall be routed through the hole in the conduit panel.

.

Sound Pressure in Octave Bands

	Frequency (Hz)	63	125	250	500	1000	2000	4000	8000
18K (208V)	Cooling dB(A)	43.1	43.5	46.2	48.6	47.0	42.8	37.8	32.9
	Heating dB(A)	37.8	42.8	43.7	46.9	48.3	45.5	41.4	34.6
18K (208V) High Heat	Cooling dB(A)	56.9	63.4	57.0	53.4	48.7	43.7	37.4	32.0
	Heating dB(A)	59.7	63.3	57.7	54.3	50.3	44.8	39.7	34.7
24K (208V)	Cooling dB(A)	47.2	50.1	50.0	51.1	51.7	47.5	41.6	34.4
	Heating dB(A)	44.0	48.6	49.7	51.4	53.2	49.1	44.4	37.6
24K (208V) High Heat	Cooling dB(A)	63.3	62.4	59.2	53.6	51.0	46.1	42.6	36.8
	Heating dB(A)	65.6	66.8	62.6	55.4	53.7	49.3	45.3	40.8
30K (208V)	Cooling dB(A)	42.9	47.3	54.1	54.2	56.2	54.4	49.6	41.8
	Heating dB(A)	44.0	50.5	51.9	52.9	53.5	50.9	47.7	40.4
30K (208V) High Heat	Cooling dB(A)	64.0	69.4	61.6	55.7	54.5	50.4	47.1	41.3
	Heating dB(A)	64.2	68.2	62.7	57.1	56.5	52.6	49.1	43.5
36K (208V)	Cooling dB(A)	45.5	56.1	55.8	56.4	56.8	53.3	50.6	42.9
	Heating dB(A)	43.6	51.0	52.4	52.9	55.7	52.9	49.5	41.7
36K (208V) High Heat	Cooling dB(A)	65.9	63.3	57.4	57.6	53.2	48.4	44.1	48.0
	Heating dB(A)	68.5	64.8	58.9	58.0	54.6	49.0	44.2	42.5
48K (208V)	Cooling dB(A)	51.6	51.6	50.4	54.8	55.9	54.6	46.8	41.0
	Heating dB(A)	48.4	50.0	49.9	55.3	56.0	52.3	47.3	43.9
48K (208V) High Heat	Cooling dB(A)	65.4	66.5	58.7	57.7	54.6	50.1	46.5	45.6
	Heating dB(A)	64.0	65.5	60.9	59.7	56.1	50.6	45.6	42.7
60K (208V)	Cooling dB(A)	49.1	52.1	53.7	57.0	58.2	55.1	47.8	41.1
	Heating dB(A)	45.5	50.9	53.3	56.7	56.7	52.3	46.5	42.2
60K (208V) High Heat	Cooling dB(A)	49.4	52.2	52.3	56.4	56.4	50.9	48.2	51.0
	Heating dB(A)	49.8	51.1	51.2	54.9	56.8	51.6	46.2	43.2

Outdoor Unit Sound Pressure Test Conditions

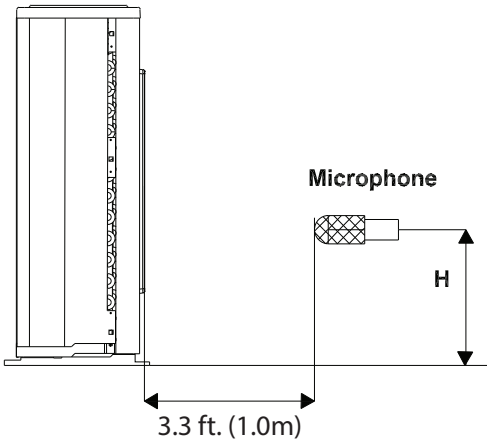

A220462

Fig. 5 —Outdoor Unit Sound Pressure Test

NOTE: H=0.5 x Height of outdoor unit

	INDOOR CONDITION		OUTDOOR CONDITION	
	DB	WB	DB	WB
Cooling	80.6°F (27°C)	66.2°F (19°C)	95°F (35°C)	75.2°F (24°C)
Heating	68°F (20°C)	59°F (15°C)	44.6°F (7°C)	42.8°F (6°C)

ELECTRICAL DATA

Outdoor Unit		18K	18K High Heat	24K	24K High Heat	30K	30K High Heat	36K	36K High Heat	48K	48K High Heat	60K	60K High Heat
Minimum Circuit Ampacity (MCA)	A	16	16	19	20.0	20	23	24	30	34	40	34	40
Maximum Overcurrent Protection Ampacity (MOPA)	A	20	20	30	35	35	35	40	50	50	50	50	50
Voltage-Phase Frequency		208/230-1-60											
Max – Min Voltage Range*	V	253-187											
		Cooling											
Running current	(A)	7.5	6.5	9.7	9.40	12.20	12.40	15.82	14.8	21.9	24.2	23.8	26.7
Power consumption	(W)	1620	1430	2120	1920	2760	2720	3750	3300	5046	5530	5644	6110
Power factor	(%)	97.2	71.1	98.9	94.6	95.8	96.4	97.2	97.8	98	99	98.3	97.9
		Heating											
Running current range	(A)	6.7	7	9.8	9.13	12.40	12.50	16.12	14.8	23.3	21.5	20.9	21.5
Power consumption	(W)	1510	1550	2150	2040	2850	2780	3496	3400	5373	4880	4959	4940
Power factor	(%)	96.9	71.5	98.8	94.5	96.3	96.7	96.8	97.6	98.4	98.9	97.7	97.1

*Permissible limits of the voltage range at which the unit will operate satisfactorily.

Fan and Motor Specifications

System Size		18K	18K High Heat	24K	24K High Heat	30K	30K High Heat	36K	36K High Heat	48K	48K High Heat	60K	60K High Heat
Diameter	inch (mm)	17.09 (434)	21.06 (535)	21.06 (535)	22.05 (560)	22.05 (560)	22.05 (560)	22.05 (560)	21.8 (554)	21.8 (554)	21.8 (554)	21.8 (554)	21.8 (554)
Height	inch (mm)	5.67(144)	5.24 (133)	5.24 (133)	5.47 (139)	5.47 (139)	5.47 (139)	5.47 (139)	5.83 (148)	5.83 (148)	5.83 (148)	5.83 (148)	5.83 (148)
Model	-	ZKFN-34-10-1-3	ZKFN-80-8-3	ZKFN-80-8-3	ZKFN-120-8-2	ZKFN-120-8-2	ZKFN-120-8-2	ZKFN-120-8-2	ZKFN-85-8-22-5x2	ZKFN-85-8-22-5x2	ZKFN-85-8-22-5x2	ZKFN-85-8-22-5x2	ZKFN-85-8-22-5x2
Voltage-Phase-Frequency		208/230-3-60											
FLA	A	1	1	1	1.35	1.35	1.35	1.48	2.4	2.4	2.4	2.4	2.4
Rated HP	HP	1/16	1/10	1/10	1/6	1/6	1/6	1/6	1/9x2	1/9x2	1/9x2	1/9x2	1/9x2
Output	W	34	80	80	120	120	120	120	85	85	85	85	85
Type	-	DC											
Insulation class	-	B	E	E	E	E	E	E	E	E	E	E	E
Safe class	-	IP24	IPX4	IPX4	IPX4	IPX4	IPX4	IPX4	IPX4	IPX4	IPX4	IPX4	IPX4
Input	W	99.6	120	120	173	173	173	173	85	85	85	85	85
Range of current	Ams	0.89±10 %	1±20%	1±20%	1.39±10 %	1.39±10 %	1.39±10 %	1.39±10 %	1.178±10 %	1.178±10 %	1.178±10 %	1.178±10 %	1.178±10 %
Rated current	Amp	0.89	0.82	0.82	1.21	1.21	1.21	1.21	1.178	1.178	1.178	1.178	1.178
Speed	rev/ min	840/700/ 650	800/700/ 580	810/700/ 450	950/700/ 500	950/700/ 500	950/900/ 500	950/700/ 500	850/750/ 650	850/750/ 650	850/750/ 650	900/850/ 650	850/750/ 650
Rated RPM	rev/ min	840	800	810	950	950	950	950	850	850	850	900	850
Max. input	W	99.6	120.0	120.0	170.0	170.0	170.0	170.0	126	126	126	126	126

Manufacturer reserves the right to change, at any time, specifications and designs without notice and without obligations.

CONNECTION DIAGRAMS

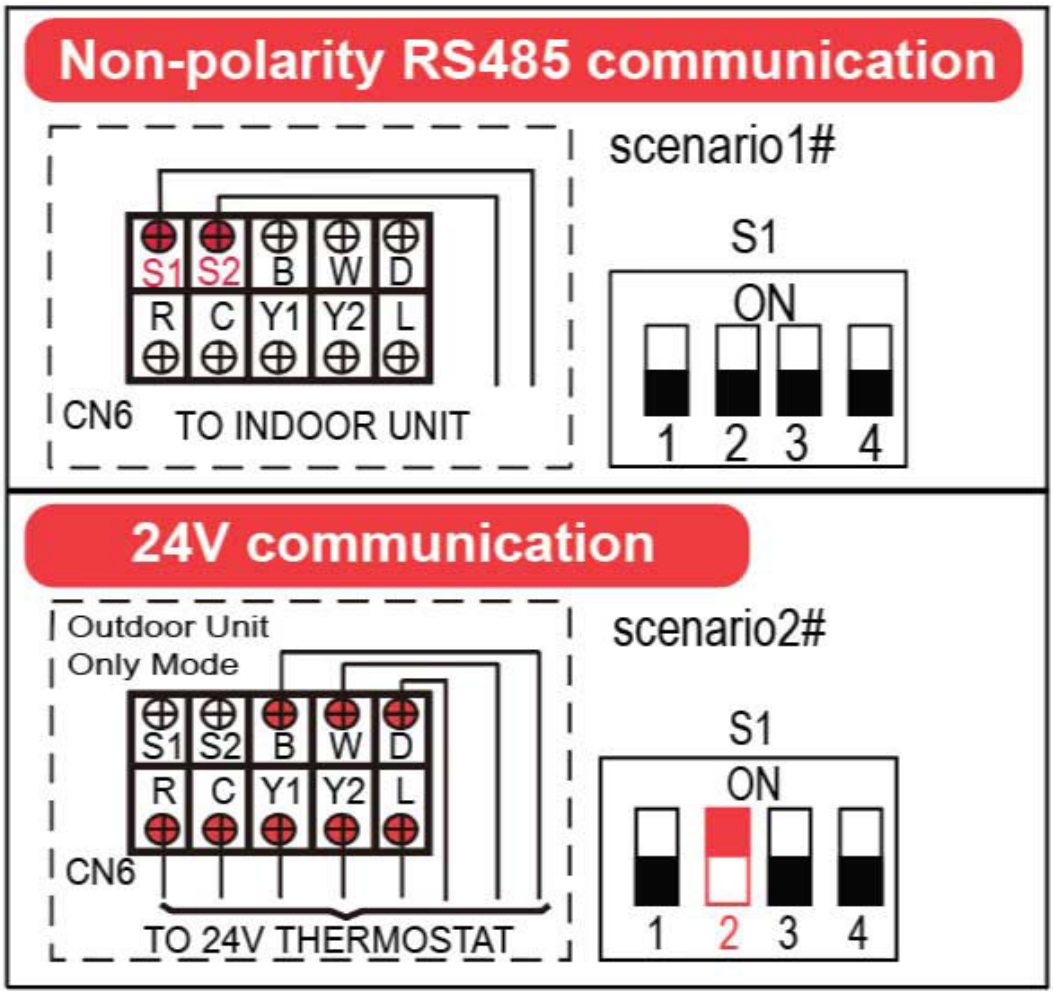

Fig. 6 —Connection Diagrams

24V CONNECTION DIAGRAMS

Table 1 — Terminal Function

R	24V Power Connection
C	Common
Y1	Low Demand
Y2	High Demand
B	Heating Reversing Valve
W	Heating Control
D	Defrost - (24V output signal)
L	System Fault - (24V output signal)

NOTE: Terminal D will be energized when the outdoor unit goes into defrost mode and can be used to enable electric heat. This feature is not available when the outdoor unit communicates with the indoor unit via non-polarity RS485 Communication S1-S2.

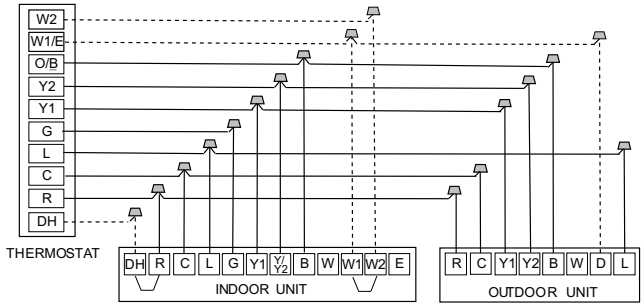

Fig. 7 —Wiring for 4H and 2C Thermostat

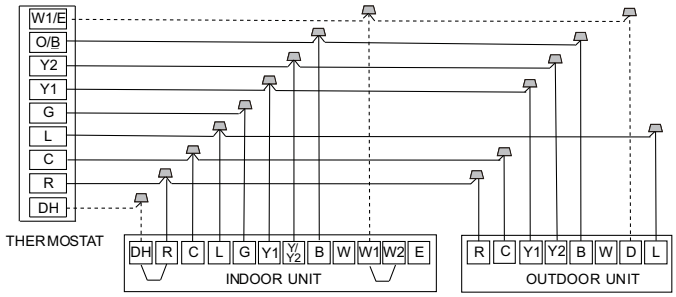

Fig. 10 —Wiring for 3H and 2C Thermostat

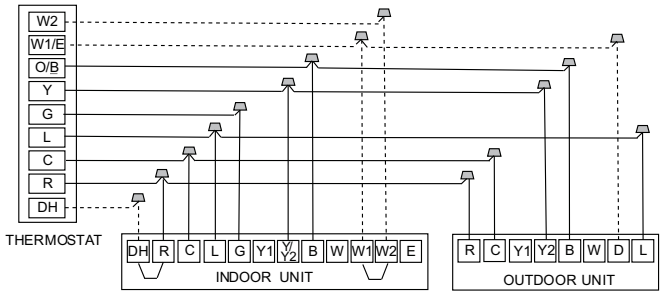

Fig. 8 —Wiring for 3H and 1C Thermostat

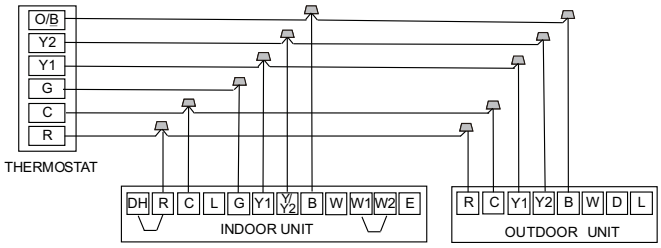

Fig. 11 —Wiring for 2H and 2C Thermostat

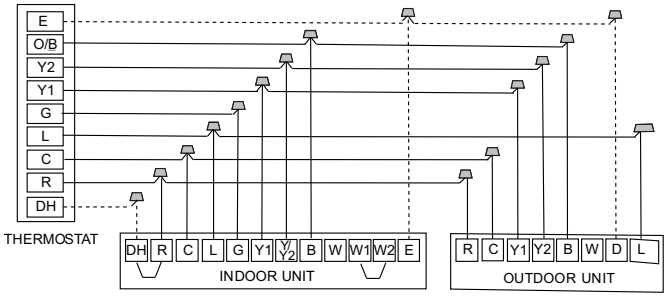

Fig. 9 —Wiring for 3H and 2C Thermostat

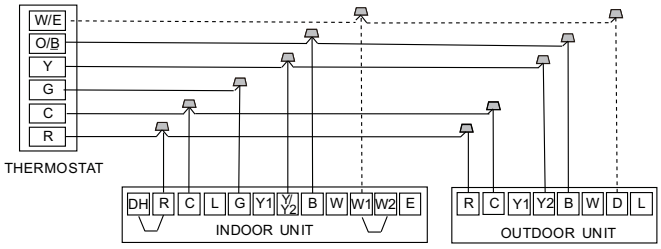

Fig. 12 — Wiring for 2H and 1C Thermostat

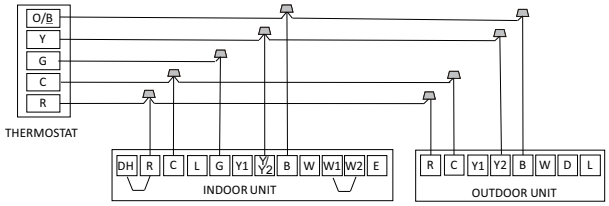

Fig. 13 —Wiring for 1H and 1C Thermostat

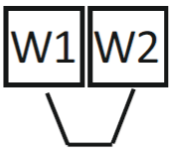

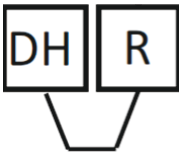

S4-1:
Default ON: For single stage supplemental heat, W1 and W2 are connected.

OFF: For dual stage supplemental heat, W1 and W2 are controlled independently. feature is enabled through thermostat.

S4-2:
Default ON: Dehumidification control not available.

OFF: Dehumidification feature is enabled through thermostat.

Note: Dip switches are located on compatible indoor unit. Refer to the indoor unit installation manual for additional information.

WIRING DIAGRAMS

CBP	BOM Code	Wiring Label
38MURAQ18AA3	22023116000102	16022000C73977
38MURAQ24AA3	22023116000081	16022000C73984
38MURAQ30AA3	22023116000101	16022000C75547
38MURAQ36AA3	22023116000082	16022000C75547
38MURAQ48AA3	22023116000103	16022000C72885
38MURAQ60AA3	22023116000083	16022000C72885
38MURAQ18AB3	22023116000162	16022000C73984
38MURAQ24AB3	22023116000161	16022000C75547
38MURAQ30AB3	22023116000163	16022000C75547
38MURAQ36AB3	22023116000164	16022000C72962
38MURAQ48AB3	22023116000141	16022000C72962
38MURAQ60AB3	22023116000281	16022000C72962

Standard Models

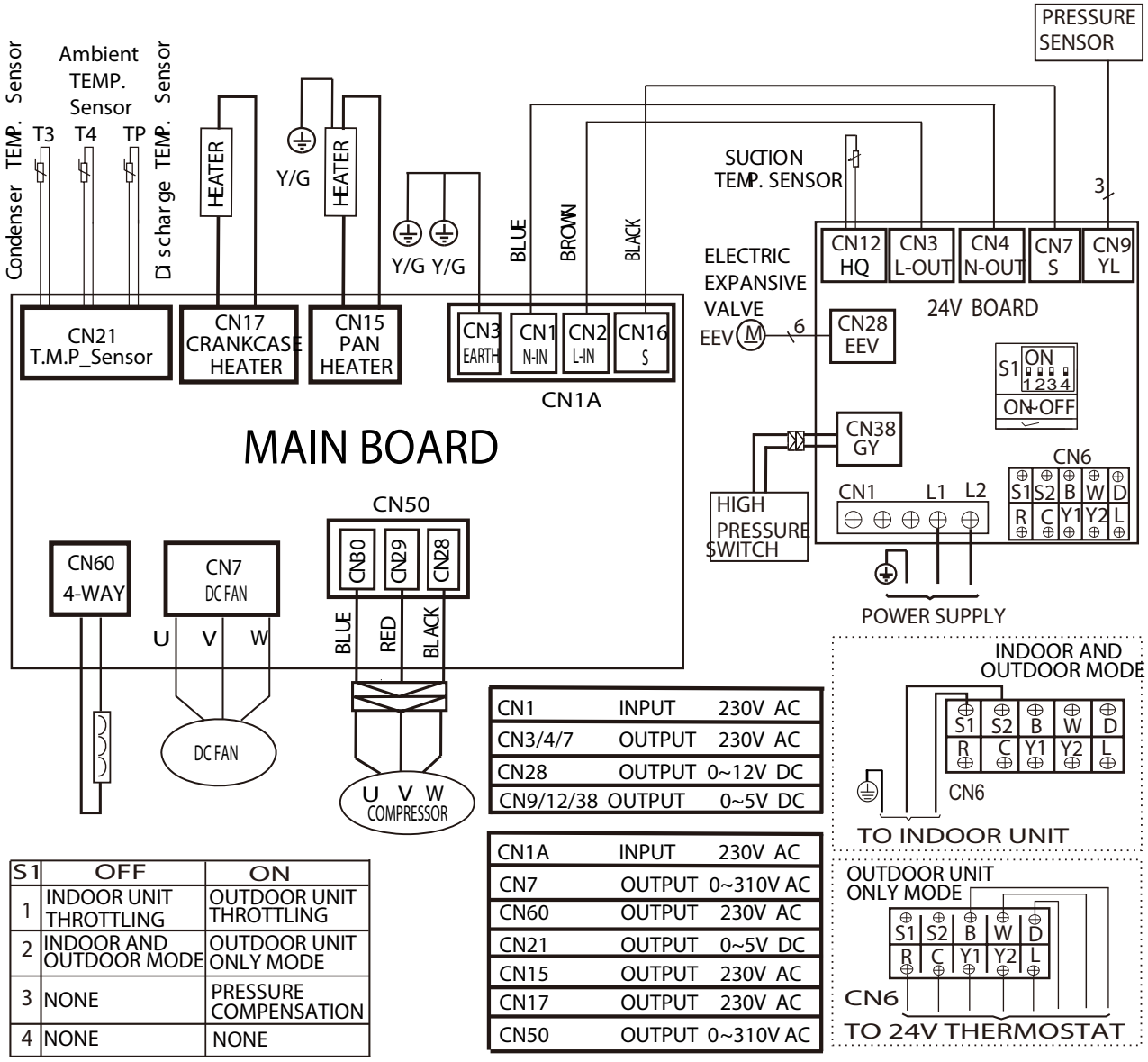

Fig. 14 —Wiring Diagram Size 18K

WIRING DIAGRAMS (CONTINUED)

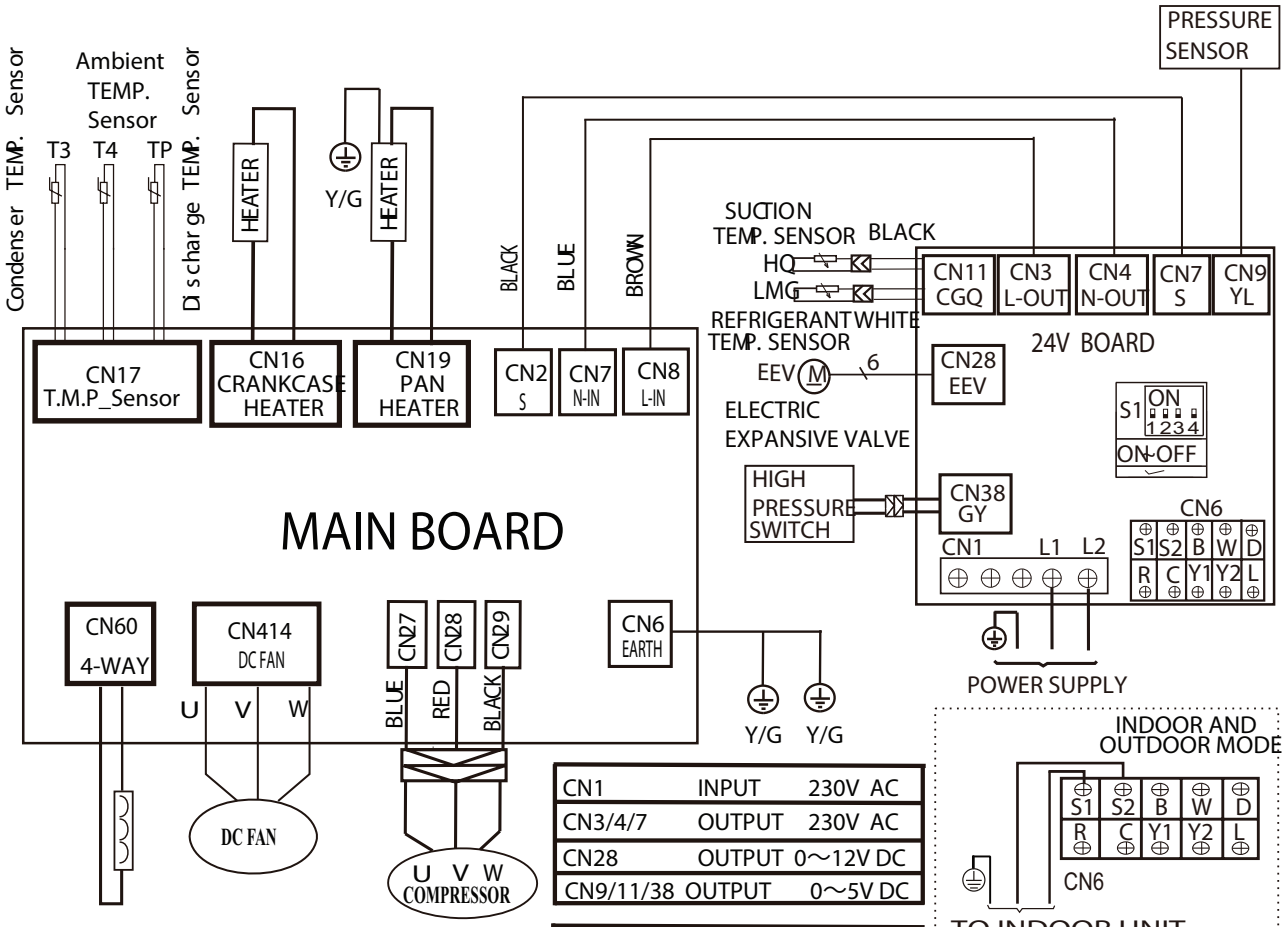

CN1	INPUT	230V AC
CN3/4/7	OUTPUT	230V AC
CN28	OUTPUT	0～12V DC
CN9/11/38	OUTPUT	0～5V DC

CN2/7/8	INPUT	230V AC
CN414	OUTPUT	0～310V AC
CN60	OUTPUT	230V AC
CN17	OUTPUT	0～5V DC
CN16	OUTPUT	230V AC
CN19	OUTPUT	230V AC
CN27/28/29	OUTPUT	0～310V AC

S1	OFF	ON
1	INDOOR UNIT THROTTLING	OUTDOOR UNIT THROTTLING
2	INDOOR AND OUTDOOR MODE	OUTDOOR UNIT ONLY MODE
3	NONE	PRESSURE COMPENSATION
4	NONE	NONE

A221422

Fig. 15 — Wiring Diagram - Size 24K

Manufacturer reserves the right to change, at any time, specifications and designs without notice and without obligations.

WIRING DIAGRAMS (CONTINUED)

OUTDOOR UNIT MAIN BOARD	
CODE	PART NAME
CN11 ,CN 12	Input:230VAC High voltage
CN 4	Output:Connection of the high voltage-- (24V BOARD' S CN7 "S"
CN4 1	Connection to the earth
CN2 6	Input:Pin2,Pin3,Pin5 (5VDC),Pin4,Pin1,Pin6 (0-5VDC)-- "T3","T4","Tp"
CN2 9	Input:Pin1,Pin3 (0-5VDC),Pin2,Pin4(0VDC)--H/L Pressure Switch
CN3 2	Connection to DC FAN
U,V,W	Connection to compressor voltage among phases 0-310VAC
CN20 ,CN8	Output:230VAC High voltage--COMPRESSOR HEATER
CN21 ,CN36	Output:230VAC High voltage--CHASSIS HEATER
CN3 8	Output:230VAC High voltage--REVERSE VALVE

OUTDOOR UNIT 24V BOARD	
CN11	Input:Pin1,Pin3 (5VDC),Pin2,Pin4 (0-5VDC)
CN28	Output:Pin1-Pin4 Pulse waveform (0-12VDC),Pin5 、Pin6 (12VDC) --EEV
S1	Input:Pin1-Pin4 (5VDC),Pin5-Pin8 (0-5VDC)
CN6	INDOOR AND OUTDOOR MODE:"S1"S2"Connection to INDOOR UNIT,OUTDOOR UNIT ONLY MODE:"B"W"D"R"C"Y1"Y2"L"Connection to 24V THERMOSTAT
CN9	Input:Pin2 (0-5VDC),Pin3 (5VDC),Pin1 (0VDC)--PRESSURE SENSOR
CN7	Output:Connection of the high voltage-- -(MAIN BOARD' S CN7)"S"
CN4,CN3	Input:230VAC High voltage

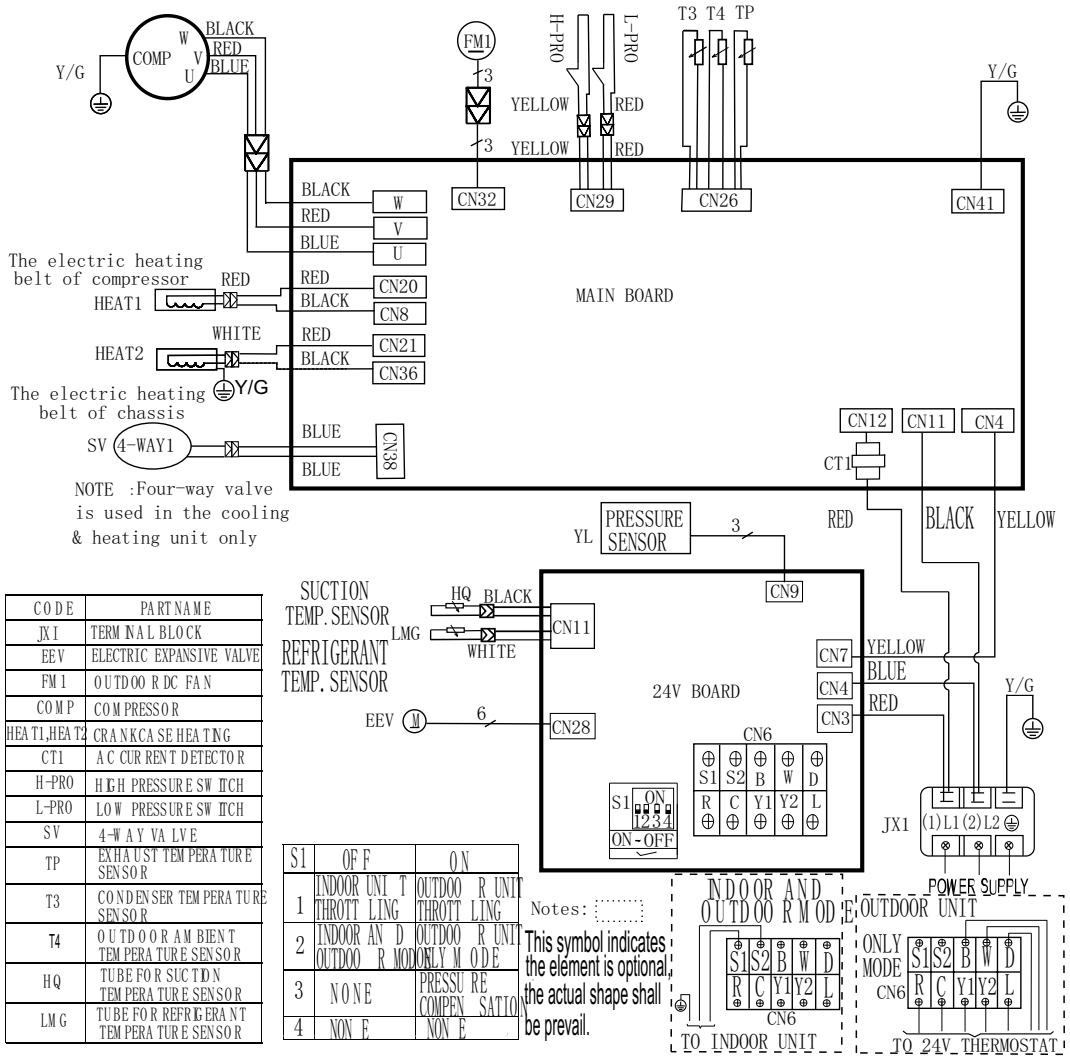

CODE	PART NAME
JX1	TERMINAL BLOCK
EEV	ELECTRIC EXPANSIVE VALVE
FM1	OUTDOOR DC FAN
COMP	COMPRESSOR
HEAT1,HEAT2	CRANKCASE HEATING
CT1	AC CURRENT DETECTOR
H-PRO	HIGH PRESSURE SWITCH
L-PRO	LOW PRESSURE SWITCH
SV	4-WAY VALVE
TP	EXHAUST TEMPERATURE SENSOR
T3	CONDENSER TEMPERATURE SENSOR
T4	OUTDOOR AMBIENT TEMPERATURE SENSOR
HQ	TUBE FOR SUCTION TEMPERATURE SENSOR
LMG	TUBE FOR REFRIGERANT TEMPERATURE SENSOR

S1	OFF	ON
1	INDOOR UNIT THROTTLING	OUTDOOR UNIT THROTTLING
2	INDOOR AND OUTDOOR MODE	OUTDOOR UNIT ONLY MODE
3	NONE	PRESSURE COMPENSATION
4	NONE	NONE

A221423

Fig. 16 —Wiring Diagram Sizes 30K-36K

WIRING DIAGRAMS (CONTINUED)

OUTDOOR UNIT MAIN CONTROL BOARD	
CODE	**PART NAME**
CN1~CN3	Input:230VAC High voltage
P5 P6	Connection to the earth
P8~P7	Output:230VAC High voltage to 24V BOARD
CN21	Output:Pin1(Connection of the high voltage)"S"
CN17~CN18	Output:230VAC High voltage----REVERSING VALVE
CN24~CN25	Output:230VAC High voltage----CRANKCASE HEATER
CN19~CN20	Output:230VAC High voltage----CHASSIS HEATER
CN8	Input:Pin1(0-5VDC),Pin2(5VDC)
CN9	Input:Pin3 Pin4(5VDC),Pin2(0VDC),Pin1 Pin5(0-5VDC)
CN6	Communication:Pin1-Pin6 Pulse waveform(0-5VDC),Pin7, Pin9(0VDC),Pin8(0-5VDC),Pin10(5VDC)--to IPM&PFC BOARD
CN2~CN4	Output:230VAC High voltage to IPM&PFC BOARD
CN10	Input:Pin2 Pin4(0VDC),Pin1 Pin3(0-5VDC)--H/L Pressure switch
CN14	Input:Pin1(5VDC),Pin2(0-5VDC)--COMP. TOP OLP TEMP.SENSOR

OUTDOOR UNIT IPM&PFC BOARD	
CODE	**PART NAME**
CN2~CN3	Input:230VAC High voltage
CN9	Communication:Pin1-Pin2 Pulse waveform(0-5VDC),Pin7, Pin9(0VDC),Pin10(5VDC)--to outdoor main control board
U~V~W	Connect to compressor voltage among phases 0~250VAC
CN8 CN5	Connect to DCFAN voltage among phases 0~200VAC

24V BOARD	
CODE	**PART NAME**
CN3~CN4	Input:230VAC High voltage
CN7	(Connection of the high voltage)"S"
CN9	Input:Pin1(5VDC),Pin2(0-5VDC),Pin3(0VDC)--PRESSURE SENSOR
CN28	Output:Pin1-Pin4 Pulse waveform(0-12VDC), Pin5 Pin6(12VDC) to EEV
CN11	Input:Pin1 Pin3(5VDC),Pin2 Pin4(0-5VDC)

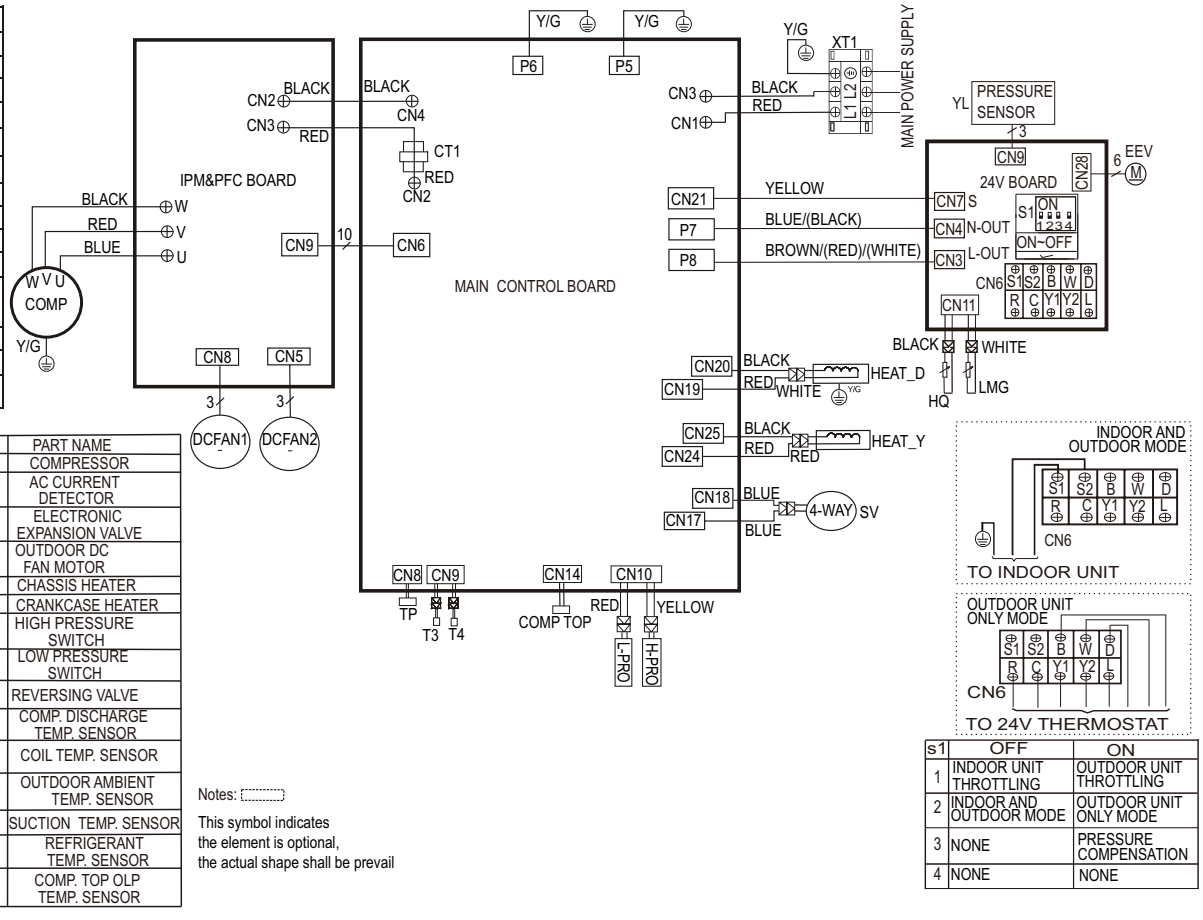

CODE	PART NAME
COMP	COMPRESSOR
CT1	AC CURRENT DETECTOR
EEV	ELECTRONIC EXPANSION VALVE
DCFAN1 DCFAN2	OUTDOOR DC FAN MOTOR
HEAT_D	CHASSIS HEATER
HEAT_Y	CRANKCASE HEATER
H-PRO	HIGH PRESSURE SWITCH
L-PRO	LOW PRESSURE SWITCH
SV	REVERSING VALVE
TP	COMP. DISCHARGE TEMP. SENSOR
T3	COIL TEMP. SENSOR
T4	OUTDOOR AMBIENT TEMP. SENSOR
HQ	SUCTION TEMP. SENSOR
LMG	REFRIGERANT TEMP. SENSOR
COMP TOP	COMP. TOP OLP TEMP. SENSOR

Notes:

This symbol indicates the element is optional, the actual shape shall be prevail

s1	OFF	ON
1	INDOOR UNIT THROTTLING	OUTDOOR UNIT THROTTLING
2	INDOOR AND OUTDOOR MODE	OUTDOOR UNIT ONLY MODE
3	NONE	PRESSURE COMPENSATION
4	NONE	NONE

A221424

Fig. 17 —Wiring Diagram Sizes 48K-60K

WIRING DIAGRAMS (CONTINUED)

High Heat Models

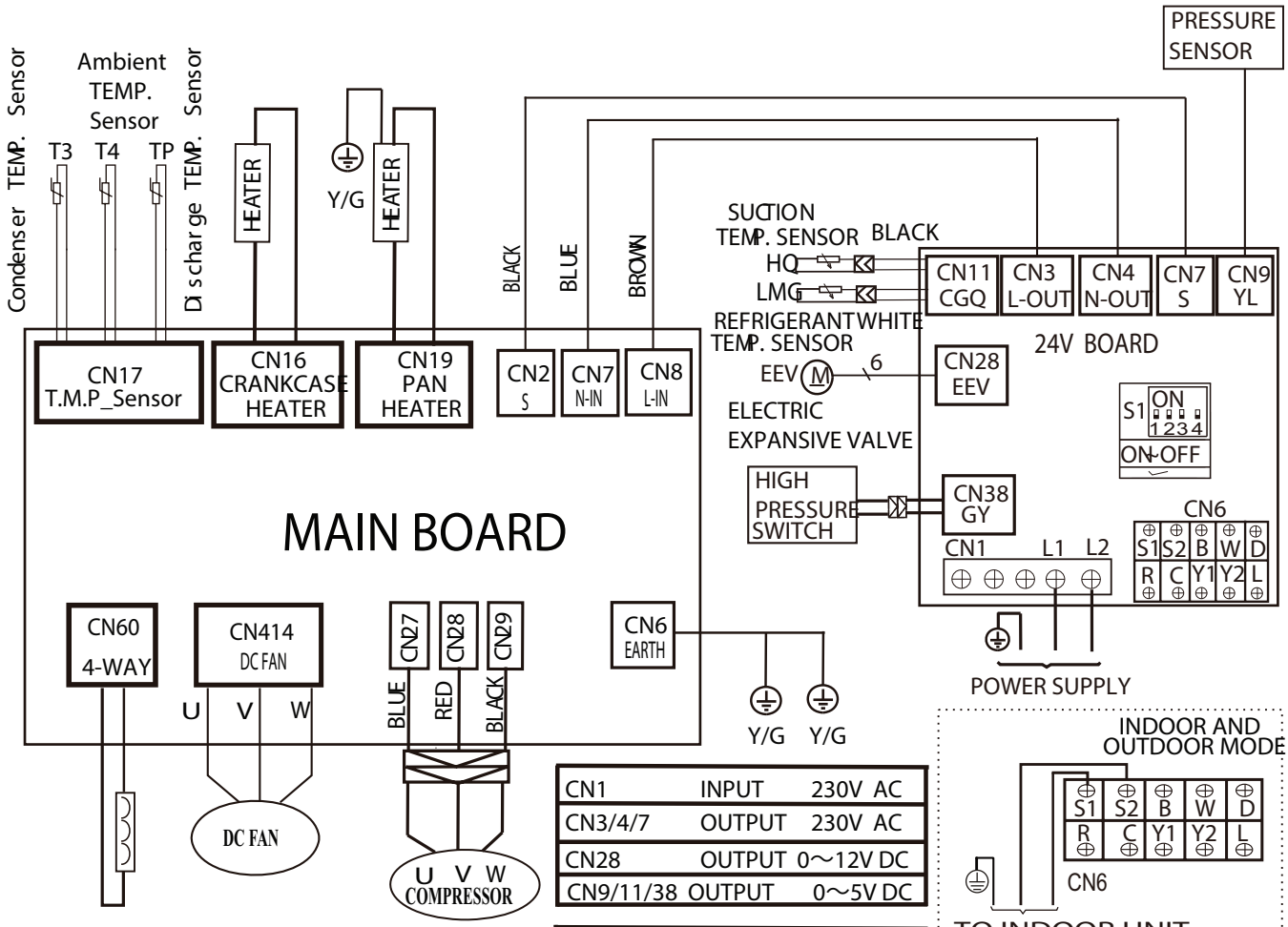

CN1	INPUT	230V AC
CN3/4/7	OUTPUT	230V AC
CN28	OUTPUT	0～12V DC
CN9/11/38	OUTPUT	0～5V DC

CN2/7/8	INPUT	230V AC
CN414	OUTPUT	0～310V AC
CN60	OUTPUT	230V AC
CN17	OUTPUT	0～5V DC
CN16	OUTPUT	230V AC
CN19	OUTPUT	230V AC
CN27/28/29	OUTPUT	0～310V AC

S1	OFF	ON
1	INDOOR UNIT THROTTLING	OUTDOOR UNIT THROTTLING
2	INDOOR AND OUTDOOR MODE	OUTDOOR UNIT ONLY MODE
3	NONE	PRESSURE COMPENSATION
4	NONE	NONE

A221425

Fig. 14 —Wiring Diagram Sizes 18K HH

WIRING DIAGRAMS (CONTINUED)

OUTDOOR UNIT MAIN BOARD	
CODE	PART NAME
CN11,CN12	Input:230VAC High voltage
CN4	Output:Connection of the high voltage-- (24V BOARD'S CN7 "S"
CN41	Connection to the earth
CN26	Input:Pin2,Pin3,Pin5(5VDC),Pin4,Pin1,Pin6(0-5VDC)-- "T3","T4","Tp"
CN29	Input:Pin1,Pin3(0-5VDC),Pin2,Pin4(0VDC)--H/L Pressure Switch
CN32	Connection to DC FAN
U,V,W	Connection to compressor voltage among phases 0-310VAC
CN20,CN8	Output:230VAC High voltage--COMPRESSOR HEATER
CN21,CN36	Output:230VAC High voltage--CHASSIS HEATER
CN38	Output:230VAC High voltage---REVERSE VALVE

OUTDOOR UNIT 24V BOARD	
CN11	Input:Pin1,Pin3(5VDC),Pin2,Pin4(0-5VDC)
CN28	Output:Pin1-Pin4:Pulse waveform (0-12VDC),Pin5 、Pin6 (12VDC) --EEV
S1	Input:Pin1-Pin4(5VDC),Pin5-Pin8(0-5VDC)
CN6	INDOOR AND OUTDOOR MODE:S1"S2"Connection to INDOOR UNIT,OUTDOOR UNIT ONLY MODE:B"W"D"R"C"Y1"Y2"L"Connection to 24V THERMOSTAT
CN9	Input:Pin2(0-5VDC),Pin3(5VDC),Pin1(0VDC)---PRESSURE SENSOR
CN7	Output:Connection of the high voltage— -(MAIN BOARD'S CN7)"S"
CN4,CN3	Input:230VAC High voltage

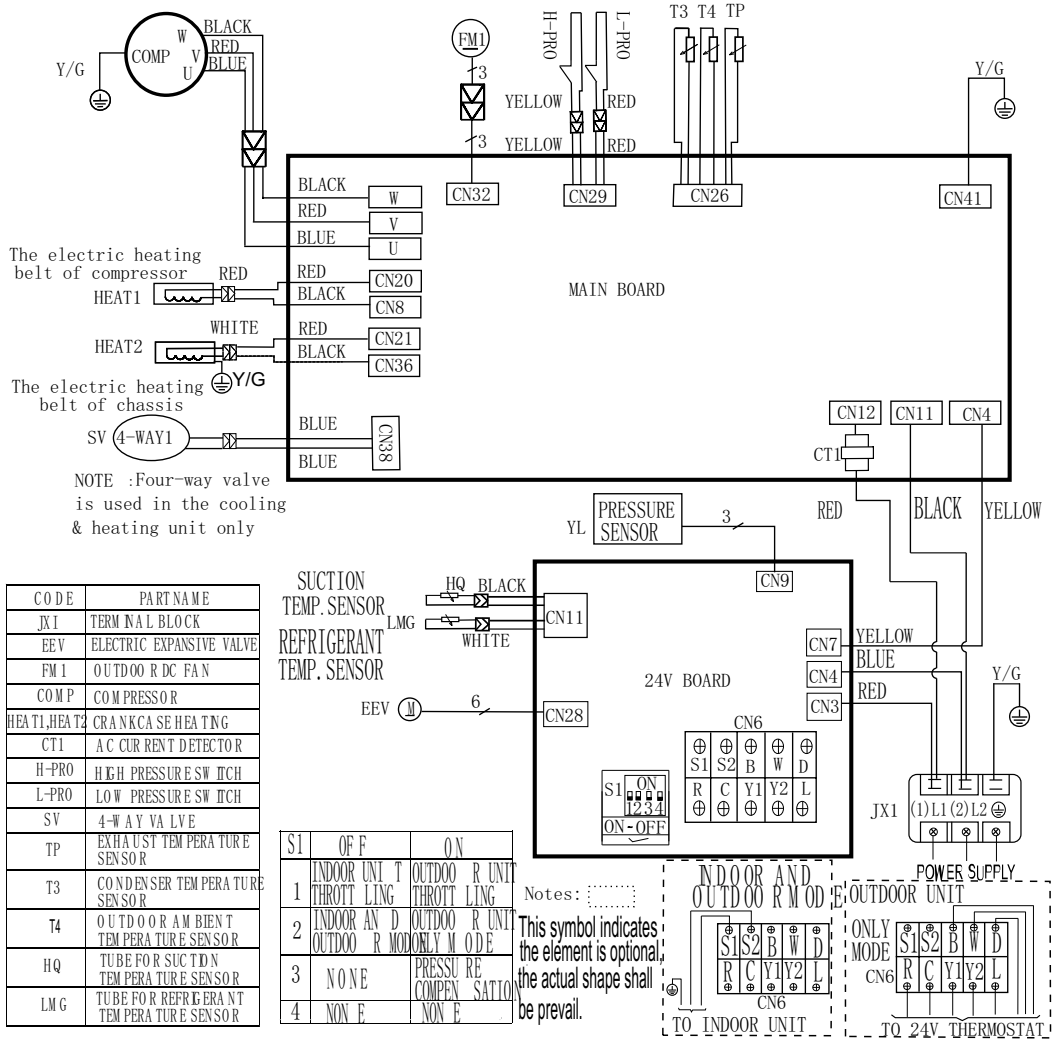

CODE	PART NAME
JX1	TERMINAL BLOCK
EEV	ELECTRIC EXPANSIVE VALVE
FM1	OUTDOOR DC FAN
COMP	COMPRESSOR
HEAT1,HEAT2	CRANKCASE HEATING
CT1	AC CURRENT DETECTOR
H-PRO	HIGH PRESSURE SWITCH
L-PRO	LOW PRESSURE SWITCH
SV	4-WAY VALVE
TP	EXHAUST TEMPERATURE SENSOR
T3	CONDENSER TEMPERATURE SENSOR
T4	OUTDOOR AMBIENT TEMPERATURE SENSOR
HQ	TUBE FOR SUCTION TEMPERATURE SENSOR
LMG	TUBE FOR REFRIGERANT TEMPERATURE SENSOR

S1	OFF	ON
1	INDOOR UNIT THROTTLING	OUTDOOR UNIT THROTTLING
2	INDOOR AND OUTDOOR MODE	OUTDOOR UNIT ONLY MODE
3	NONE	PRESSURE COMPENSATION
4	NONE	NONE

A221426

Fig. 14 —Wiring Diagram Sizes 24K-30K HH

WIRING DIAGRAMS (CONTINUED)

OUTDOOR UNIT MAIN CONTROL BOARD	
CODE	**PART NAME**
CN1~CN3	Input:230VAC High voltage
P5 P6	Connection to the earth
P8~P7	Output:230VAC High voltage to 24V BOARD
CN21	Output:Pin1(Connection of the high voltage)"S"
CN17~CN18	Output:230VAC High voltage----REVERSING VALVE
CN24~CN25	Output:230VAC High voltage----CRANKCASE HEATER
CN19~CN20	Output:230VAC High voltage----CHASSIS HEATER
CN8	Input:Pin1(0-5VDC),Pin2(5VDC)
CN9	Input:Pin3 Pin4(5VDC),Pin2(0VDC),Pin1 Pin5(0-5VDC)
CN6	Communication:Pin1-Pin6 Pulse waveform(0-5VDC),Pin7, Pin9(0VDC),Pin8(0-5VDC),Pin10(5VDC)--to IPM&PFC BOARD
CN2~CN4	Output:230VAC High voltage to IPM&PFC BOARD
CN10	Input:Pin2 Pin4(0VDC),Pin1 Pin3(0-5VDC)--H/L Pressure switch
CN14	Input:Pin1(5VDC),Pin2(0-5VDC)--COMP. TOP OLP TEMP.SENSOR
CN23	Output:Pin1-Pin4 Pulse waveform(0-12VDC), Pin5 Pin6(12VDC) to EEV

OUTDOOR UNIT IPM&PFC BOARD	
CODE	**PART NAME**
CN2~CN3	Input:230VAC High voltage
CN9	Communication:Pin1-Pin2 Pulse waveform(0-5VDC),Pin7, Pin9(0VDC),Pin10(5VDC)--to outdoor main control board
U~V~W	Connect to compressor voltage among phases 0~250VAC
CN8 CN5	Connect to DCFAN voltage among phases 0~200VAC

24V BOARD	
CODE	**PART NAME**
CN3~CN4	Input:230VAC High voltage
CN7	(Connection of the high voltage)"S"
CN9	Input:Pin1(5VDC),Pin2(0-5VDC),Pin3(0VDC)--PRESSURE SENSOR
CN28	Output:Pin1-Pin4 Pulse waveform(0-12VDC), Pin5 Pin6(12VDC) to EEV
CN11	Input:Pin1 Pin3(5VDC),Pin2 Pin4(0-5VDC)

CODE	PART NAME
COMP	COMPRESSOR
CT1	AC CURRENT DETECTOR
EEV	ELECTRONIC EXPANSION VALVE
DCFAN1 DCFAN2	OUTDOOR DC FAN MOTOR
HEAT_D	CHASSIS HEATER
HEAT_Y	CRANKCASE HEATER
H-PRO	HIGH PRESSURE SWITCH
L-PRO	LOW PRESSURE SWITCH
SV	REVERSING VALVE
TP	COMP. DISCHARGE TEMP. SENSOR
T3	COIL TEMP. SENSOR
T4	OUTDOOR AMBIENT TEMP. SENSOR
HQ	SUCTION TEMP. SENSOR
LMG	REFRIGERANT TEMP. SENSOR
COMP TOP	COMP. TOP OLP TEMP. SENSOR

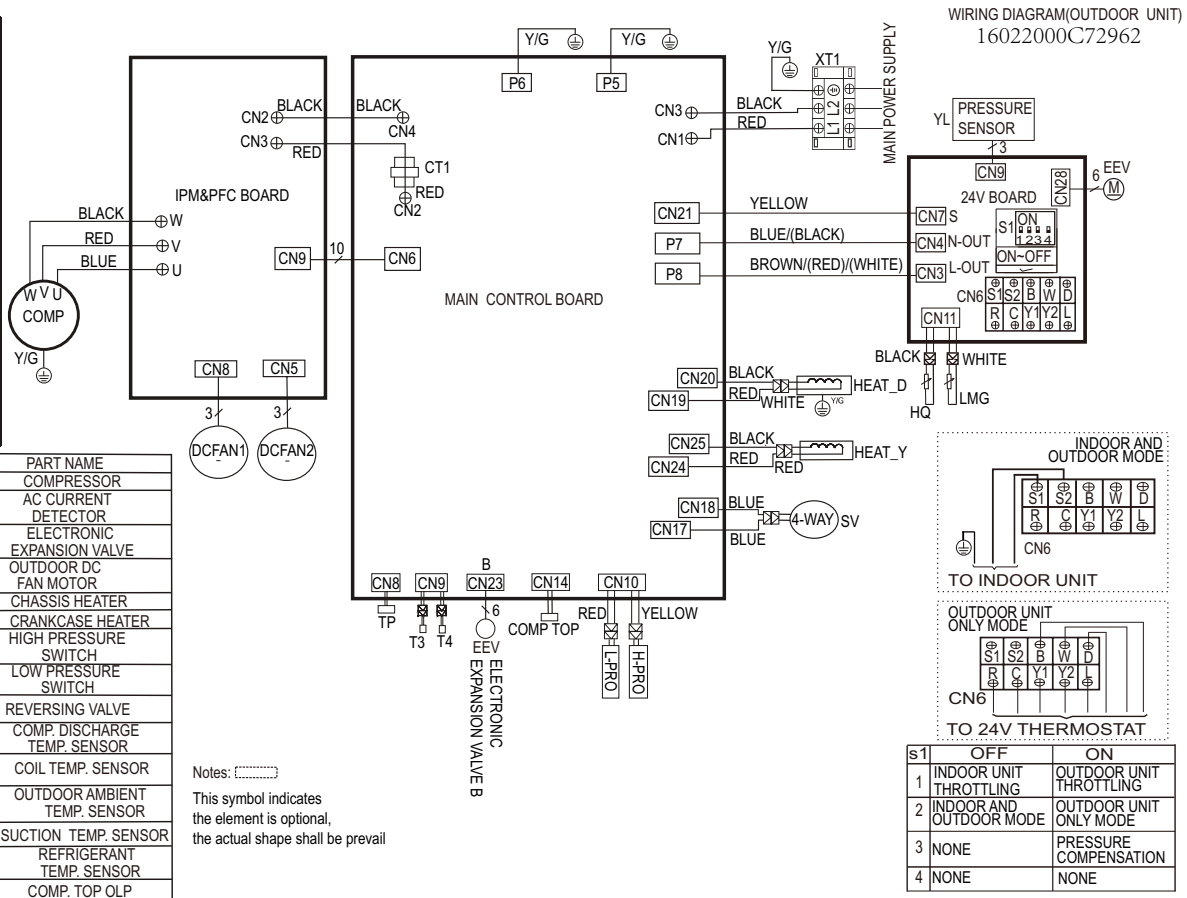

s1	OFF	ON
1	INDOOR UNIT THROTTLING	OUTDOOR UNIT THROTTLING
2	INDOOR AND OUTDOOR MODE	OUTDOOR UNIT ONLY MODE
3	NONE	PRESSURE COMPENSATION
4	NONE	NONE

A221427

Fig. 14 —Wiring Diagram Sizes 36K-48K HH

WIRING DIAGRAMS (CONTINUED)

OUTDOOR UNIT MAIN CONTROL BOARD	
CODE	PART NAME
CN1~CN3	Input:230VAC High voltage
P5 P6	Connection to the earth
P8~P7	Output:230VAC High voltage to 24V BOARD
CN21	Output:Pin1(Connection of the high voltage)"S"
CN17~CN18	Output:230VAC High voltage----REVERSING VALVE
CN24~CN25	Output:230VAC High voltage----CRANKCASE HEATER
CN19~CN20	Output:230VAC High voltage----CHASSIS HEATER
CN8	Input:Pin1(0-5VDC),Pin2(5VDC)
CN9	Input:Pin3 Pin4(5VDC),Pin2(0VDC),Pin1 Pin5(0-5VDC)
CN6	Communication:Pin1-Pin6 Pulse waveform(0-5VDC),Pin7, Pin9(0VDC),Pin8(0-5VDC),Pin10(5VDC)--to IPM&PFC BOARD
CN2~CN4	Output:230VAC High voltage to IPM&PFC BOARD
CN10	Input:Pin2 Pin4(0VDC),Pin1 Pin3(0-5VDC)--H/L Pressure switch
CN14	Input:Pin1(5VDC),Pin2(0-5VDC)--COMP. TOP OLP TEMP.SENSOR
CN23	Output:Pin1-Pin4 Pulse waveform(0-12VDC), Pin5 Pin6(12VDC) to EEV

OUTDOOR UNIT IPM&PFC BOARD	
CODE	PART NAME
CN2~CN3	Input:230VAC High voltage
CN9	Communication:Pin1-Pin2 Pulse waveform(0-5VDC),Pin7, Pin9(0VDC),Pin10(5VDC)--to outdoor main control board
U~V~W	Connect to compressor voltage among phases 0~250VAC
CN8 CN5	Connect to DCFAN voltage among phases 0~200VAC

24V BOARD	
CODE	PART NAME
CN3~CN4	Input:230VAC High voltage
CN7	(Connection of the high voltage)"S"
CN9	Input:Pin1(5VDC),Pin2(0-5VDC),Pin3(0VDC)--PRESSURE SENSOR
CN28	Output:Pin1-Pin4 Pulse waveform(0-12VDC), Pin5 Pin6(12VDC) to EEV
CN11	Input:Pin1 Pin3(5VDC),Pin2 Pin4(0-5VDC)

CODE	PART NAME
COMP	COMPRESSOR
CT1	AC CURRENT DETECTOR
EEV	ELECTRONIC EXPANSION VALVE
DCFAN1 DCFAN2	OUTDOOR DC FAN MOTOR
HEAT_D	CHASSIS HEATER
HEAT_Y	CRANKCASE HEATER
H-PRO	HIGH PRESSURE SWITCH
L-PRO	LOW PRESSURE SWITCH
SV	REVERSING VALVE
TP	COMP. DISCHARGE TEMP. SENSOR
T3	COIL TEMP. SENSOR
T4	OUTDOOR AMBIENT TEMP. SENSOR
HQ	SUCTION TEMP. SENSOR
LMG	REFRIGERANT TEMP. SENSOR
COMP TOP	COMP. TOP OLP TEMP. SENSOR

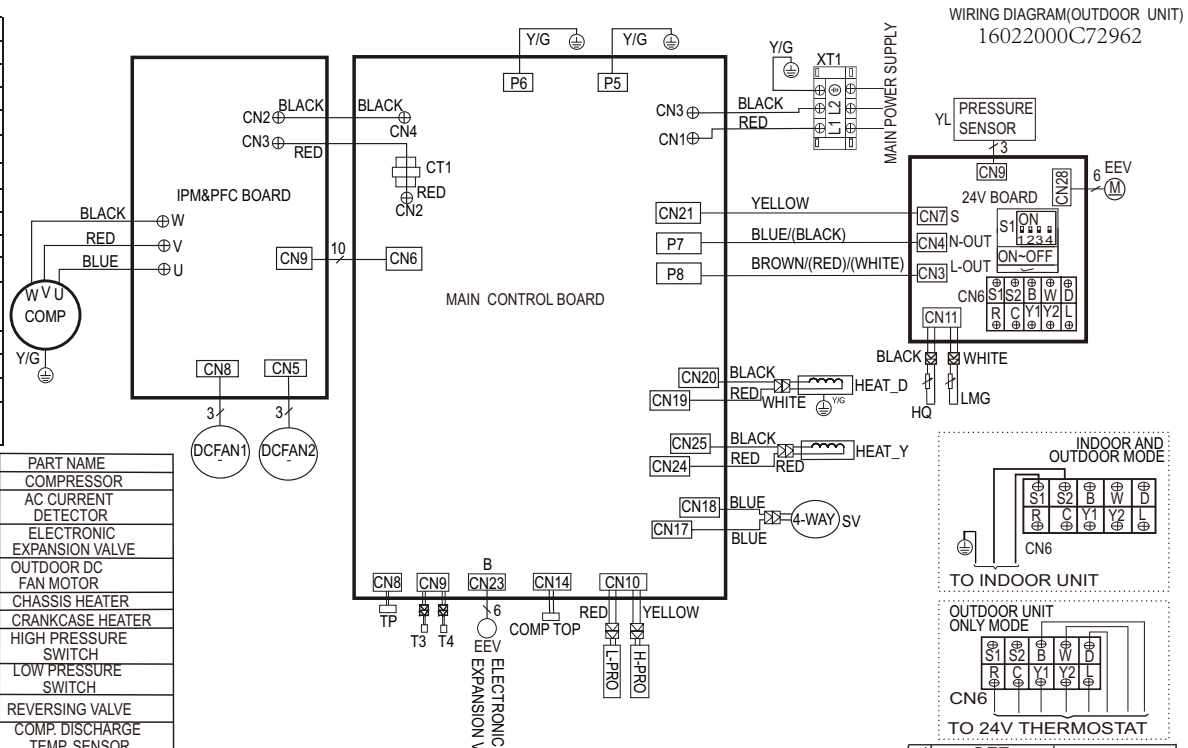

s1	OFF	ON
1	INDOOR UNIT THROTTLING	OUTDOOR UNIT THROTTLING
2	INDOOR AND OUTDOOR MODE	OUTDOOR UNIT ONLY MODE
3	NONE	PRESSURE COMPENSATION
4	NONE	NONE

Fig. 15 —Wiring Diagram Sizes 60K HH

Manufacturer reserves the right to change, at any time, specifications and designs without notice and without obligations.

GUIDE SPECIFICATIONS

HORIZONTAL DISCHARGE SPLIT-SYSTEM HEAT PUMP

Size Range: 1-1/2 to 5 Ton Nominal Cooling and Heating Capacity
Model Number: **38MURA**

Part 1 - GENERAL

1.01 System Description

1. Outdoor air-cooled split system compressor sections suitable for on-the-ground, rooftop, wall hung or balcony mounting. Units consist of a rotary compressor, an air-cooled coil, propeller-type draw-through outdoor fan, reversing valve (HP), accumulator (HP units), metering device(s), and a control box with integrated 24V and RS485 communication. Units discharge air horizontally as shown on the contract drawings. Units function as the outdoor component of an air-to-air heat pump system.
2. Units are to be used in a refrigeration circuit matched to residential heat pump fan coil units.

1.02 Agency Listings

1. Unit construction complies with ANSI/ASHRAE 15, latest revision, and with the NEC.
2. Units are evaluated in accordance with UL standard 60335-2-40.
3. Units are listed in the CEC directory.
4. Unit cabinet is capable of withstanding 500-hour salt spray test per Federal Test Standard No. 141 (method 6061).
5. Air-cooled condenser coils are leak tested at 550 psig.

1.03 Delivery, Storage, And Handling

Units are shipped in one piece and are stored and handled per unit manufacturer's recommendations.

1.04 Warranty (For Inclusion By Specifying Engineer)

Part 2 - PRODUCTS

2.01 Equipment

A. **General:**

Factory assembled, single piece, air-cooled outdoor unit. Contained within the unit enclosure is all the factory wiring, piping, controls, and the compressor.

B. **Unit Cabinet:**

1. Unit cabinet is constructed of galvanized steel, bonderized and coated with a baked-enamel finish on the inside and outside.
2. Unit access panels is removable with minimal screws and provides full access to the compressor, fan, and control components.
3. The outdoor compartment is isolated and has an acoustic lining to assure quiet operation.

C. **Fans:**

1. Outdoor fans are the direct drive propeller type, and discharges air horizontally. Fans draw air through the outdoor coil.
2. Outdoor fan motors are totally enclosed, single phase motors with class E insulation and permanently lubricated ball bearings. The motor shall be protected by internal thermal overload protection.
3. The shaft has inherent corrosion resistance.
4. Fan blades are non-metallic and statically and dynamically balanced.
5. Outdoor fan openings are equipped with a PVC metal/mesh coated protection grille over the fan.

D. **Compressor:**

1. Compressor is the fully hermetic rotary type.
2. Compressor is equipped with an oil system, operating oil charge, and a motor.
3. Motor is NEMA rated class E, suitable for operation in a refrigerant atmosphere.
4. Compressor assembly is installed on rubber vibration isolators.

E. **Outdoor Coil:**

The coil is constructed of aluminum pre-coated fins mechanically bonded to seamless copper tubes, which are cleaned, dehydrated, and sealed.

F. **Refrigeration Components:**

Refrigerant circuit components include a brass external liquid line service valve with service gage port connections, a suction line service valve with a service gage connection port, service gage port connections on compressor suction and discharge lines with Schrader type fittings with brass caps, accumulator, reversing valve.

G. **Controls and Safeties:**

Operating controls and safeties are factory selected, assembled, and tested. The minimum control functions include the following:

1. Controls:
   - **A time delay control sequence is provided standard through the fan coil board**
   - **Automatic outdoor fan motor protection.**
2. Safeties:
   - **System diagnostics**
   - **Compressor motor current and temperature overload protection**
   - **Outdoor fan failure protection.**

H. **Electrical Requirements:**

1. Unit operates on single-phase, 60 Hz power at 208/230V for unit sizes 1.5T, 1.5T-HH, 2T, 2T-HH, 2.5T, 2.5T-HH, 3T, 3T-HH, 4T, 4T-HH, 5T, 5T-HH as specified.
2. Unit electrical power has a single point connection.
3. All power and control wiring must be installed per NEC and all local electrical codes.
4. The unit has high and low voltage terminal block connections.

© 2024 Carrier. All rights reserved.

Manufacturer reserves the right to change, at any time, specifications and designs without notice and without obligations.