48VT(N)−A
Performance™ 14 SEER Single−Packaged HYBRID HEAT®
Dual Fuel System with Puron® (R−410A) Refrigerant
Single And Three Phase
2−5 Nominal Tons (Sizes 24−60)

Carrier®
Turn to the Experts.℠

Installation Instructions

NOTE: Read the entire instruction manual before starting the installation.

NOTE: Installer: Make sure the Owner's Manual and Service Instructions are left with the unit after installation.

TABLE OF CONTENTS

PAGE
SAFETY CONSIDERATIONS 1
INTRODUCTION 2
RECEIVING AND INSTALLATION 2-14
Check Equipment 2
Identify Unit 2
Inspect Shipment 2
Provide Unit Support 2
Roof Curb 2
Slab Mount 2
Field Fabricate Ductwork 2
Provide Clearances 3
Rig and Place Unit 7
Connect Condensate Drain 8
Install Flue Hood 8
Install Gas Piping 8
Install Duct Connections 9
Configuring Units for Downflow (Vertical) Discharge 9
Install Electrical Connections 13
High-Voltage Connections 13
Special Procedures for 208-V Operation 13
Control Voltage Connections 13
Balance Point Setting Thermidistat or Hybrid Heat Thermostat 14
Transformer Protection 14
PRE-START-UP 14
START-UP 15-19
Check for Refrigerant Leaks 15
Unit Sequence of Operation 15
Start-Up Heating and Make Adjustments 15
Checking Heating Control 16
Check Gas Input 16
Adjust Gas Input 16
Check Burner Flame 17
Start-Up Cooling and Make Adjustments 18
Checking Cooling Control Operation 18
Checking and Adjusting Refrigerant 18
Indoor Airflow and Airflow Adjustments 18
Continuous Fan Operation 19
MAINTENANCE 29-35
Air Filter 29
Indoor Blower and Motor 29
Flue Gas Passageways 30
Limit Switch 30
Burner Ignition 30
Main Burners 30
Outdoor Coil, Indoor Coil, & Condensate Drain Pan 30

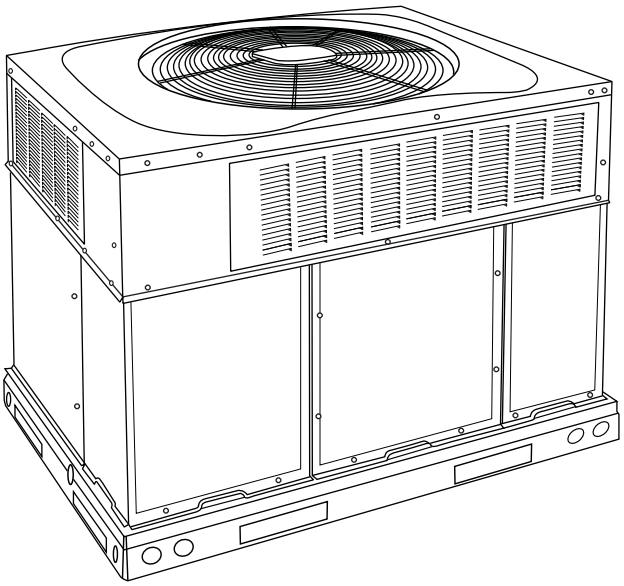

Fig. 1 - Unit 48VT-A

Outdoor Fan 31
Electrical Controls and Wiring 31
Refrigerant Circuit 31
Gas Input 32
Indoor Airflow 32
Check Defrost Thermostat 32
Puron® Items 32
TROUBLESHOOTING 35
START-UP CHECKLIST 35

SAFETY CONSIDERATIONS

Improper installation, adjustment, alteration, service maintenance, or use can cause explosion, fire, electrical shock, or other conditions which may cause death, personal injury, or property damage. Consult a qualified installer, service agency, or your distributor or branch for information or assistance. The qualified installer or agency must use factory-authorized kits or accessories when modifying this product. Refer to the individual instructions packaged with the kits or accessories when installing.

Follow all safety codes. Wear safety glasses, protective clothing, and work gloves. Have a fire extinguisher available. Read these instructions thoroughly and follow all warnings or cautions included in literature and attached to the unit. consult local building codes, the current editions of the National Fuel Gas Code (NFGC) NFPA 54/ANSI Z223.1, and the National Electrical Code (NEC) NFPA 70.

In Canada refer to the current editions of the National Standards of Canada CAN/CSA-B149.1 and .2 Natural Gas and Propane Installation codes, and Canadian Electrical Code CSA C22.1

Recognize safety information. This is the safety-alert symbol ⚠. When you see this symbol on the unit and in instructions or manuals, be alert to the potential for personal injury. Understand these

signal words: DANGER, WARNING, and CAUTION. These words are used with the safety-alert symbol. DANGER identifies the most serious hazards which **will** result in severe personal injury or death. WARNING signifies hazards which **could** result in personal injury or death. CAUTION is used to identify unsafe practices which **may** result in minor personal injury or product and property damage. NOTE is used to highlight suggestions which **will** result in enhanced installation, reliability, or operation.

⚠ WARNING

ELECTRICAL SHOCK HAZARD

Failure to follow this warning could result in personal injury or death.

Before installing or servicing system, always turn off main power to system. There may be more than one disconnect switch. Turn off accessory heater power switch if applicable. TAG THE DISCONNECT SWITCH WITH A SUITABLE WARNING LABEL.

⚠ WARNING

FIRE, EXPLOSION, ELECTRICAL SHOCK AND CARBON MONOXIDE POISONING HAZARD

Failure to follow this warning could result in personal injury, death or property damage.

A qualified installer or agency must use only factory-authorized kits or accessories when modifying this product.

⚠ CAUTION

CUT HAZARD

Failure to follow this caution may result in personal injury.

When removing access panels (see Fig. 19) or performing maintenance functions inside your unit, be aware of sharp sheet metal parts and screws. Although special care is taken to reduce sharp edges to a minimum, be extremely careful when handling parts or reaching into the unit.

INTRODUCTION

The 48VT-A unit (see Fig. 1) is a fully self-contained, combination Category I gas heating/electric heating and cooling unit designed for outdoor installation (See Fig. 2 and 3 for unit dimensions). All unit sizes have return and discharge openings for both horizontal and downflow configurations, and are factory shipped with all downflow duct openings covered. Units may be installed either on a rooftop, a cement slab, or directly on the ground, if local codes permit (See Fig. 4 for roof curb dimensions).

Models with an N in the fifth position of the model number are dedicated Low NOx units designed for California installations. These models meet the California maximum oxides of nitrogen (NOx) emissions requirements of 40 nanograms/joule or less as shipped from the factory and must be installed in California Air Quality Management Districts or any other regions in North America where a Low NOx rule exists.

RECEIVING AND INSTALLATION

Step 1 — Check Equipment

IDENTIFY UNIT

The unit model number and serial number are stamped on the unit information plate. Check this information against shipping papers.

INSPECT SHIPMENT

Inspect for shipping damage before removing packaging materials. If unit appears to be damaged or is torn loose from its anchorage, have it examined by transportation inspectors before removal. Forward claim papers directly to transportation company. Manufacturer is not responsible for any damage incurred in transit. Check all items against shipping list. Immediately notify the nearest equipment distribution office if any item is missing. To prevent loss or damage, leave all parts in original packages until installation.

If the unit is to be mounted on a curb in a downflow application, review Step 9 to determine which method is to be used to remove the downflow panels before rigging and lifting into place. The panel removal process may require the unit to be on the ground.

Step 2 — Provide Unit Support

For hurricane tie downs, contact distributor for details and PE (Professional Engineering) Certificate if required.

ROOF CURB

Install accessory roof curb in accordance with instructions shipped with curb (See Fig. 4). Install insulation, cant strips, roofing, and flashing. Ductwork must be attached to curb.

IMPORTANT: The gasketing of the unit to the roof curb is critical for a water tight seal. Install gasketing material supplied with the roof curb. Improperly applied gasketing also can result in air leaks and poor unit performance.

Curb should be level to within 1/4 in. (6 mm). This is necessary for unit drain to function properly. Refer to accessory roof curb installation instructions for additional information as required.

Installation on older "G" series roof curbs.

Two accessory kits are available to aid in installing a new "G" series unit on an old "G" roof curb.

1. Accessory kit number CPADCURB001A00, (small chassis) and accessory kit number CPADCURB002A00, (large chassis) includes roof curb adapter and gaskets for the perimeter seal and duct openings. No additional modifications to the curb are required when using this kit.
2. An alternative to the adapter curb is to modify the existing curb by removing the outer horizontal flange and use accessory kit number CPGSKTKIT001A00 which includes spacer blocks (for easy alignment to existing curb) and gaskets for the perimeter seal and duct openings. This kit is used when existing curb is modified by removing outer horizontal flange.

⚠ CAUTION

UNIT/STRUCTURAL DAMAGE HAZARD

Failure to follow this caution may result in property damage.

Ensure there is sufficient clearance for saw blade when cutting the outer horizontal flange of the roof curb so there is no damage to the roof or flashing.

SLAB MOUNT

Place the unit on a solid, level concrete pad that is a minimum of 4 in. (102 mm) thick with 2 in. (51 mm) above grade. The slab should be flush on the compressor end of the unit (to allow condensate drain installation) and should extend 2 in. (51 mm) on the three remaining sides of the unit. Do not secure the unit to the slab *except* when required by local codes.

Step 3 — Field Fabricate Ductwork

Secure all ducts to roof curb and building structure on vertical discharge units. Do not connect ductwork to unit. For horizontal applications, unit is provided with flanges on the horizontal openings. All ductwork should be secured to the flanges. Insulate and weatherproof all external ductwork, joints, and roof openings

with counter flashing and mastic in accordance with applicable codes.

Ducts passing through an unconditioned space must be insulated and covered with a vapor barrier.

If a plenum return is used on a vertical unit, the return should be ducted through the roof deck to comply with applicable fire codes.

Read unit rating plate for any required clearances around ductwork. Cabinet return-air static shall not exceed -.25 IN. W.C.

Step 4 — Provide Clearances

The required minimum operating and service clearances are shown in Fig. 2 and 3.

IMPORTANT: Do not restrict outdoor airflow. An air restriction at either the outdoor-air inlet or the fan discharge may be detrimental to compressor life.

The condenser fan pulls air through the condenser coil and discharges it through the top grille. Be sure that the fan discharge does not recirculate to the condenser coil. Do not locate the unit in either a corner or under an overhead obstruction. The minimum clearance under a partial overhang (such as a normal house overhang) is 48-in. (1219 mm) above the unit top. The maximum horizontal extension of a partial overhang must not exceed 48-in. (1219 mm).

Do not place the unit where water, ice, or snow from an overhang or roof will damage or flood the unit. Do not install the unit on carpeting or other combustible materials. The unit may be installed on wood flooring or on Class A, B, or C roof covering materials.

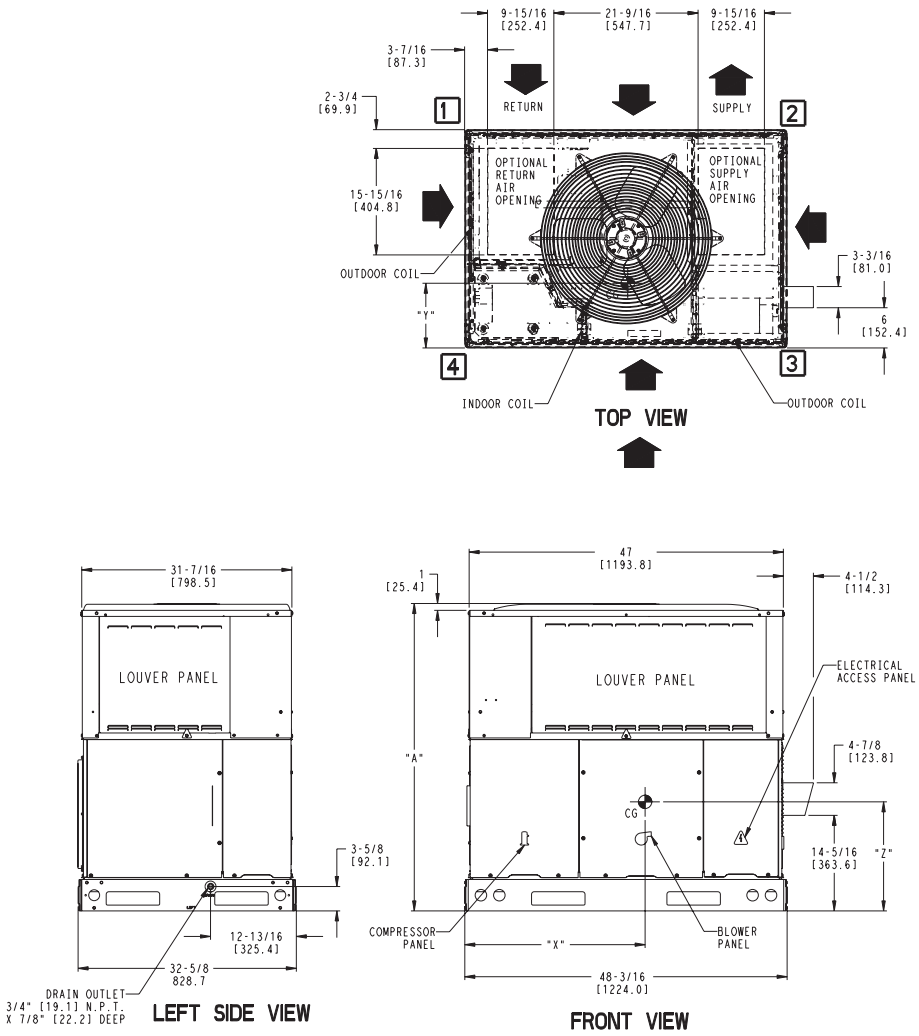

UNIT	SERIES	ELECTRICAL CHARACTERISTICS	UNIT WT.		UNIT HEIGHT IN/MM		CENTER OF GRAVITY IN/MM					
			LB	KG	"A"		X		Y		Z	
48VT-A24(040,060)	1	208/230-1-60	368	167	44-1/8	1121	22-3/4	578	15-1/2	394	16-1/4	387
48VT-A30(040,060)	1	208/230-1, 208/230-3-60	360	163	44-1/8	1121	22-3/4	578	15-1/2	394	16-1/4	387

UNITS	VOLTAGE	CORNER WEIGHT LB/KG							
		"1"		"2"		"3"		"4"	
48VT-A24(040,060)	208/230	94	42	83	38	90	41	101	46
48VT-A30(040,060)	208/230	92	42	81	37	88	40	99	45

NOTE: ALL TABLE DATA RELEVANT FOR ALL FACTORY INSTALLED OPTIONS EXCEPT ECONOMIZER

REQUIRED CLEARANCES TO COMBUSTIBLE MATL.

	INCHES [MM]
TOP OF UNIT	14 [355.6]
DUCT SIDE OF UNIT	2 [50.8]
SIDE OPPOSITE DUCTS	14 [355.6]
BOTTOM OF UNIT	1/2 [12.7]
FLUE PANEL	36 [914.4]

NEC. REQUIRED CLEARANCES.

	INCHES [MM]
BETWEEN UNITS, POWER ENTRY SIDE	42 [1066.8]
UNIT AND UNGROUNDED SURFACES, POWER ENTRY SIDE	36 [914.0]
UNIT AND BLOCK OR CONCRETE WALLS AND OTHER GROUNDED SURFACES, POWER ENTRY SIDE	42 [1066.8]

REQUIRED CLEARANCE FOR OPERATION AND SERVICING

	INCHES [MM]
EVAP. COIL ACCESS SIDE	36 [914.0]
POWER ENTRY SIDE	42 [1066.8]
(EXCEPT FOR NEC REQUIREMENTS)	
UNIT TOP	48 [1219.2]
SIDE OPPOSITE DUCTS	36 [914.0]
DUCT PANEL	12 [304.8]*

*MINIMUM DISTANCES: IF UNIT IS PLACED LESS THAN 12 [304.8] FROM WALL SYSTEM, THEN SYSTEM PERFORMANCE MAYBE COMPROMISED.

DIMENSIONS IN [] ARE IN MM

48VT500037	REV 2.0

Fig. 2 - 48VT-A24-30 Unit Dimensions

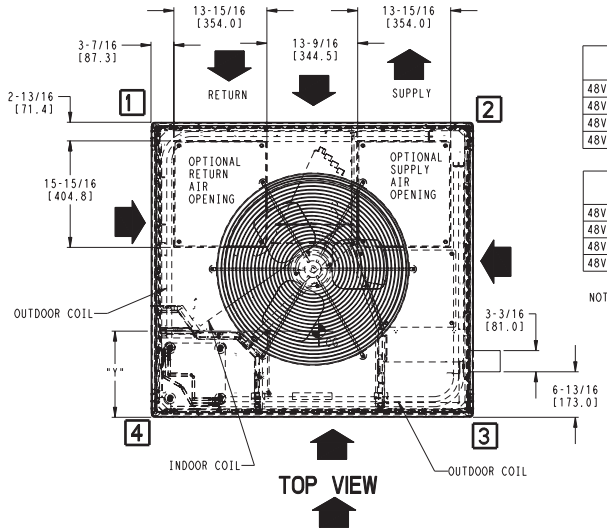

TOP VIEW

UNIT	SERIES	ELECTRICAL CHARACTERISTICS	UNIT WT.		UNIT HEIGHT IN/MM		CENTER OF GRAVITY IN/MM					
			LB	KG	"A"		X		Y		Z	
48VT-A36(060,090)	1	208/230-1,208/230-3-60	440	200	44-3/4	1137	22-3/4	578	18	457	17-1/8	435
48VT-A42(060,090)	1	208/230-1,208/230-3-60	486	220	48-3/4	1238	22-3/4	578	18	457	17-3/8	435
48VT-A48(090,115,130)	1	208/230-1,208/230-3-60	506	230	48-3/4	1238	22-3/4	578	18	457	17-3/8	435
48VT-A60(090,115,130)	1	208/230-1,208/230-3-60	540	245	54-3/4	1391	22-3/4	578	18	457	17-3/4	435

UNITS	VOLTAGE	CORNER WEIGHT LB/KG							
		"1"		"2"		"3"		"4"	
48VT-A36(060,090)	208/230	96	43	85	38	122	55	138	62
48VT-A42(060,090)	208/230	106	48	94	42	135	61	152	69
48VT-A48(090,115,130)	208/230	110	50	98	44	140	64	158	72
48VT-A60(090,115,130)	208/230	117	53	104	47	150	68	169	77

NOTE: ALL TABLE DATA RELEVANT FOR ALL FACTORY INSTALLED OPTIONS EXCEPT ECONOMIZER

REQUIRED CLEARANCES TO COMBUSTIBLE MATL.

	INCHES [MM]
TOP OF UNIT	14 [355.6]
DUCT SIDE OF UNIT	2 [50.8]
SIDE OPPOSITE DUCTS	14 [355.6]
BOTTOM OF UNIT	1/2 [12.7]
FLUE PANEL	36 [914.4]

NEC. REQUIRED CLEARANCES.

	INCHES [MM]
BETWEEN UNITS, POWER ENTRY SIDE	42 [1066.8]
UNIT AND UNGROUNDED SURFACES, POWER ENTRY SIDE	36 [914.0]
UNIT AND BLOCK OR CONCRETE WALLS AND OTHER GROUNDED SURFACES, POWER ENTRY SIDE	42 [1066.8]

REQUIRED CLEARANCE FOR OPERATION AND SERVICING

	INCHES [MM]
EVAP. COIL ACCESS SIDE	36 [914.0]
POWER ENTRY SIDE	42 [1066.8]
(EXCEPT FOR NEC REQUIREMENTS)	
UNIT TOP	48 [1219.2]
SIDE OPPOSITE DUCTS	36 [914.0]
DUCT PANEL	12 [304.8]*

*MINIMUM DISTANCES:IF UNIT IS PLACED LESS THAN 12 [304.8]FROM WALL SYSTEM,THEN SYSTEM PERFORMANCE MAYBE COMPROMISED.

DIMENSIONS IN [] ARE IN MM

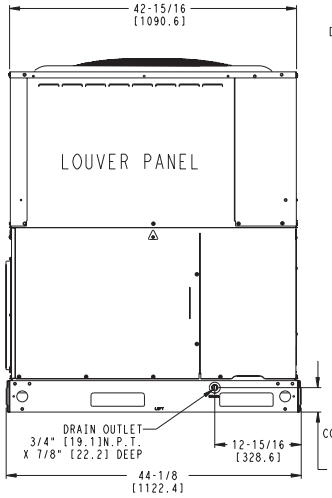

LEFT SIDE VIEW

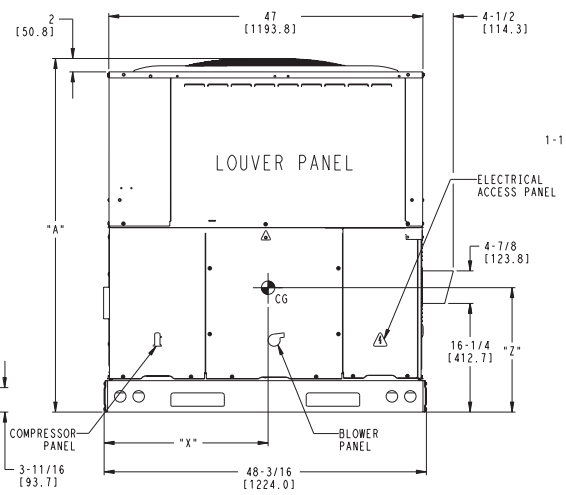

FRONT VIEW

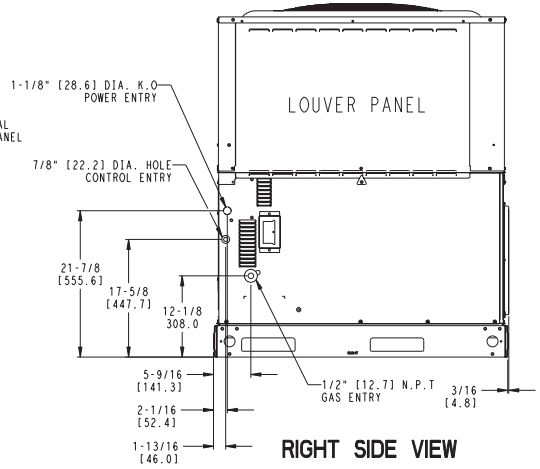

RIGHT SIDE VIEW

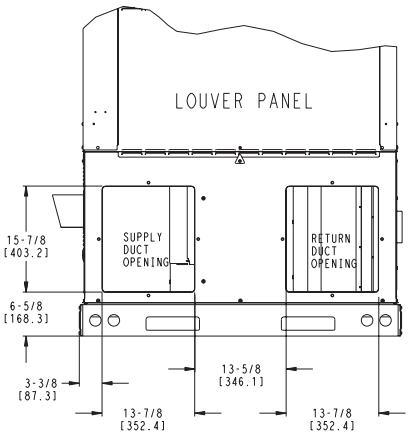

REAR VIEW

48VT500038	REV 2.0

Fig. 3 - 48VT-A36-60 Unit Dimensions

A09417

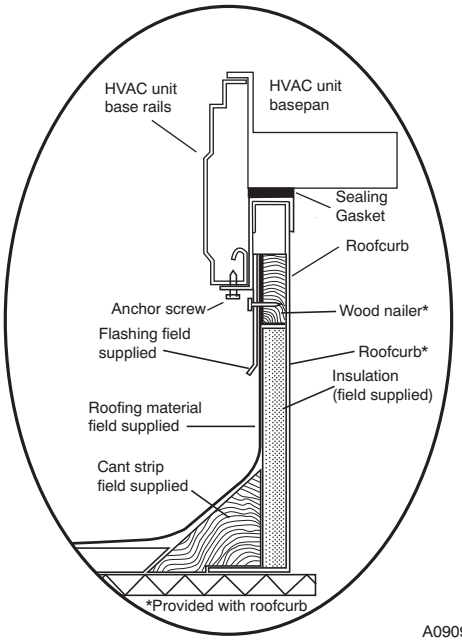

ROOF CURB DETAIL

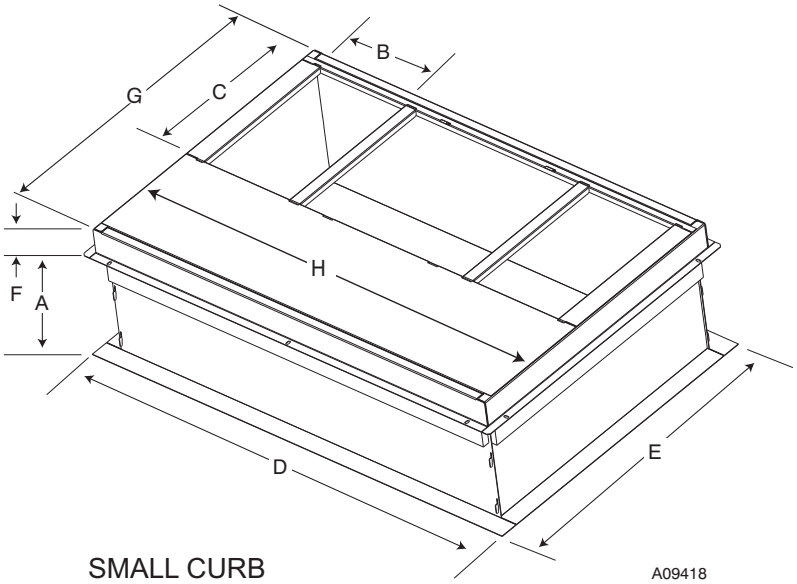

SMALL CURB

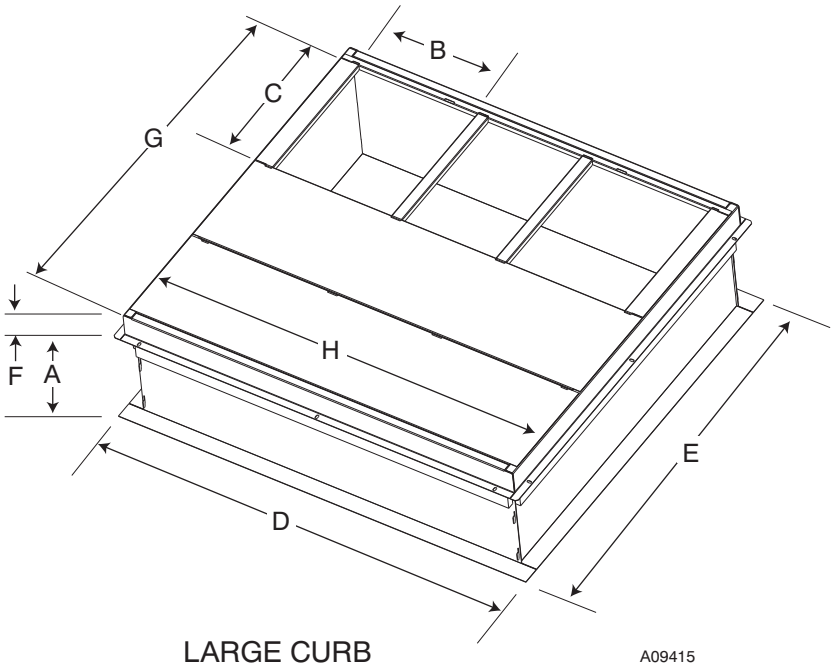

LARGE CURB

A09419

UNIT SIZE	CATALOG NUMBER	A IN. (mm)	B IN. (mm)*	C IN. (mm)	D IN. (mm)	E IN. (mm)	F IN. (mm)	G IN. (mm)	H IN. (mm)
Small	CPRFCURB010A00	11 (279)	10 (254)	16 (406)	47.8 (1214)	32.4 (822)	2.7 (69)	30.6 (778)	46.1 (1170)
	CPRFCURB011A00	14 (356)							
Large	CPRFCURB012A00	11 (279)	14 (356)			43.9 (1116)		42.2 (1072)	
	CPRFCURB013A00	14 (356)							

NOTES:

1. Roof curb must be set up for unit being installed.
2. Seal strip must be applied, as required, to unit being installed.
3. Roof curb is made of 16-gauge steel.
4. Attach ductwork to curb (flanges of duct rest on curb).
5. Insulated panels: 1-in. (25.4 mm) thick fiberglass 1 lb. density.

IMPORTANT: Do not install large base pan HYBRID HEAT units onto the small base pan (common curb). The center of gravity on a large base pan HYBRID HEAT unit could overhang the curb causing an unsafe condition. Before installing any large base pan unit onto the common curb, check the "Y" distance in the product literature dimensional drawing to ensure that "Y" is greater than 14 in. (356 mm). Do not install any large base pan unit onto the common curb with a "Y" dimension (center of gravity) less than 14 in. (356 mm).

Fig. 4 - Roof Curb Dimensions

⚠ CAUTION - NOTICE TO RIGGERS
⚠ PRUDENCE - AVIS AUX MANIPULATEUR

ACCESS PANELS MUST BE IN PLACE WHEN RIGGING.
PANNEAUX D'ACCES DOIT ÊTRE EN PLACE POUR MANIPULATION.

Use top skid as spreader bar. / Utiliser la palette du haut comme barre de répartition

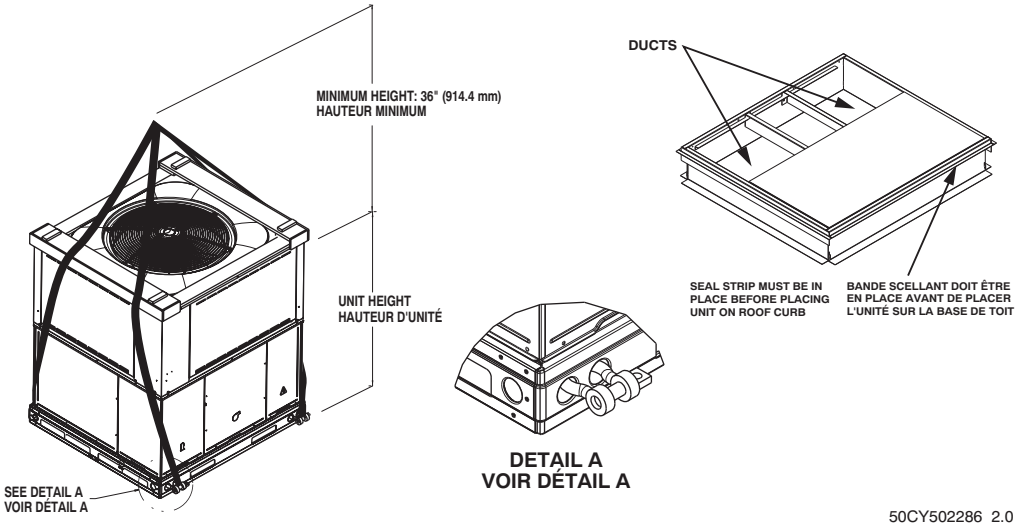

A09051

Unit	24		30		Unit	36		42		48		60	
	lb	kg	lb	kg		lb	kg	lb	kg	lb	kg	lb	kg
Rigging Weight	374	170	366	166	Rigging Weight	448	203	494	224	514	233	548	249

NOTE: See dimensional drawing for corner weight distribution.

Fig. 5 - 48VT-A Suggested Rigging

Step 5 — Rig and Place Unit

⚠ WARNING

PERSONAL INJURY OR PROPERTY DAMAGE HAZARD

Failure to follow this warning could result in personal injury, death or property damage.

When installing the unit on a rooftop, be sure the roof will support the additional weight.

Rigging and handling of this equipment can be hazardous for many reasons due to the installation location (roofs, elevated structures, etc.).

Only trained, qualified crane operators and ground support staff should handle and install this equipment.

When working with this equipment, observe precautions in the literature, on tags, stickers, and labels attached to the equipment, and any other safety precautions that might apply.

Training for operators of the lifting equipment should include, but not be limited to, the following:

1. Application of the lifter to the load, and adjustment of the lifts to adapt to various sizes or kinds of loads.
2. Instruction in any special operation or precaution.
3. Condition of the load as it relates to operation of the lifting kit, such as balance, temperature, etc.

Follow all applicable safety codes. Wear safety shoes and work gloves.

Inspection

Prior to initial use, and at monthly intervals, all rigging shackles, clevis pins, and straps should be visually inspected for any damage, evidence of wear, structural deformation, or cracks. Particular attention should be paid to excessive wear at hoist hooking points and load support areas. Materials showing any kind of wear in these areas must not be used and should be discarded.

⚠ WARNING

UNIT FALLING HAZARD

Failure to follow this warning could result in personal injury or death.

Never stand beneath rigged units or lift over people.

⚠ WARNING

PROPERTY DAMAGE HAZARD

Failure to follow this warning could result in personal injury/death or property damage.

When straps are taut, the clevis should be a minimum of 36 in. (914 mm) above the unit top cover.

Rigging/Lifting of Unit (See Fig. 5)

Lifting holes are provided in base rails as shown in Fig. 2 and 3.

1. Leave top shipping skid on the unit for use as a spreader bar to prevent the rigging straps from damaging the unit. If the skid is not available, use a spreader bar of sufficient length to protect the unit from damage.
2. Attach shackles, clevis pins, and straps to the base rails of the unit. Be sure materials are rated to hold the weight of the unit (See Fig. 5).

3. Attach a clevis of sufficient strength in the middle of the straps. Adjust the clevis location to ensure unit is lifted level with the ground.

After the unit is placed on the roof curb or mounting pad, remove the top skid.

Step 6 — Connect Condensate Drain

NOTE: When installing condensate drain connection be sure to comply with local codes and restrictions.

Model 48VT-A disposes of condensate water through a 3/4 in. NPT fitting which exits through the compressor access panel (See Fig. 2 and 3 for location).

Condensate water can be drained directly onto the roof in rooftop installations (where permitted) or onto a gravel apron in ground level installations. Install a field-supplied condensate trap at end of condensate connection to ensure proper drainage. Make sure that the outlet of the trap is at least 1 in. (25 mm) lower than the drain-pan condensate connection to prevent the pan from overflowing (See Fig. 6). Prime the trap with water. When using a gravel apron, make sure it slopes away from the unit.

If the installation requires draining the condensate water away from the unit, install a 2-in. (51 mm) trap at the condensate connection to ensure proper drainage (See Fig. 6). Make sure that the outlet of the trap is at least 1 in. (25 mm) lower than the drain-pan condensate connection. This prevents the pan from overflowing.

Prime the trap with water. Connect a drain tube - using a minimum of 3/4-in. PVC or 3/4-in. copper pipe (all field-supplied) - at the outlet end of the 2-in. (51 mm) trap. Do not undersize the tube. Pitch the drain tube downward at a slope of at least 1-in. (25 mm) for every 10 ft (3 m) of horizontal run. Be sure to check the drain tube for leaks.

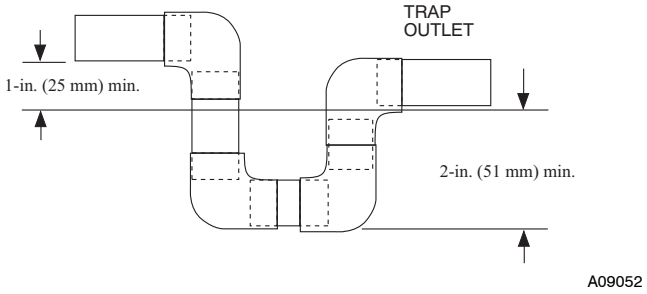

Fig. 6 - Condensate Trap

Step 7 — Install Flue Hood

The flue assembly is secured and shipped in the return air duct. Remove duct cover to locate the assembly (See Fig. 8).

NOTE: Dedicated low NOx models MUST be installed in California Air Quality Management Districts where a Low NOx rule exists.

These models meet the California maximum oxides of nitrogen (NOx) emissions requirements of 40 nanograms/joule or less as shipped from the factory.

NOTE: Low NOx requirements apply only to natural gas installations.

⚠ WARNING

CARBON MONOXIDE POISONING HAZARD

Failure to follow this warning could result in personal injury or death.

The venting system is designed to ensure proper venting. The flue hood assembly must be installed as indicted in this section of the unit installation instructions.

Install the flue hood as follows:

1. This installation must conform with local building codes and with the National Fuel Gas Code (NFGC) NFPA 54 / ANSI Z223.1, (in Canada, CAN/CGA B149.1, and B149.2) latest revision. Refer to Provincial and local plumbing or wastewater codes and other applicable local codes.
2. Remove flue hood from shipping location (inside the return section of the blower compartment-see Fig. 8). Remove the return duct cover to locate the flue hood. Place flue hood assembly over flue panel. Orient screw holes in flue hood with holes in the flue panel.
3. Secure flue hood to flue panel by inserting a single screw on the top flange and the bottom flange of the hood.

Step 8 — Install Gas Piping

The gas supply pipe enters the unit through the access hole provided. The gas connection to the unit is made to the 1/2-in. (12.7 mm) FPT gas inlet on the gas valve.

Install a gas supply line that runs to the heating section. Refer to Table 2 and the NFGC for gas pipe sizing. Do not use cast-iron pipe. It is recommended that a black iron pipe is used. Check the local utility for recommendations concerning existing lines. Size gas supply piping for 0.5 IN. W.C. maximum pressure drop. Never use pipe smaller than the 1/2-in. (12.7 mm) FPT gas inlet on the unit gas valve.

For natural gas applications, the gas pressure at unit gas connection must not be less than 4.0 IN. W.C. or greater than 13 IN. W.C. while the unit is operating. For propane applications, the gas pressure must not be less than 11.0 IN. W.C. or greater than 13 IN. W.C. at the unit connection.

A 1/8-in. (3.2 mm) NPT plugged tapping, accessible for test gauge connection, must be installed immediately upstream of the gas supply connection to the gas valve.

When installing the gas supply line, observe local codes pertaining to gas pipe installations. Refer to the NFGC NFPA 54/ANSI Z223.1 latest edition (in Canada, CAN/CGA B149.1).

NOTE: In the state of Massachusetts:

1. Gas supply connections MUST be performed by a licensed plumber or gas fitter.
2. When flexible connectors are used, the maximum length shall not exceed 36 in. (915 mm).
3. When lever handle type manual equipment shutoff valves are used, they shall be T-handle valves.
4. The use of copper tubing for gas piping is NOT approved by the state of Massachusetts.

In the absence of local building codes, adhere to the following pertinent recommendations:

1. Avoid low spots in long runs of pipe. Grade all pipe 1/4 in. (6.35 mm) for every 15 ft (4.6 m) of length to prevent traps. Grade all horizontal runs downward to risers. Use risers to connect to heating section and to meter.
2. Protect all segments of piping system against physical and thermal damage. Support all piping with appropriate straps, hangers, etc. Use a minimum of one hanger every 6 ft (1.8 m). For pipe sizes larger than 1/2 in., (12.7 mm) follow recommendations of national codes.
3. Apply joint compound (pipe dope) sparingly and only to male threads of joint when making pipe connections. Use only pipe dope that is resistant to action of liquefied petroleum gases as specified by local and/or national codes. Never use Teflon tape.
4. Install sediment trap in riser leading to heating section (See Fig. 7). This drip leg functions as a trap for dirt and condensate.

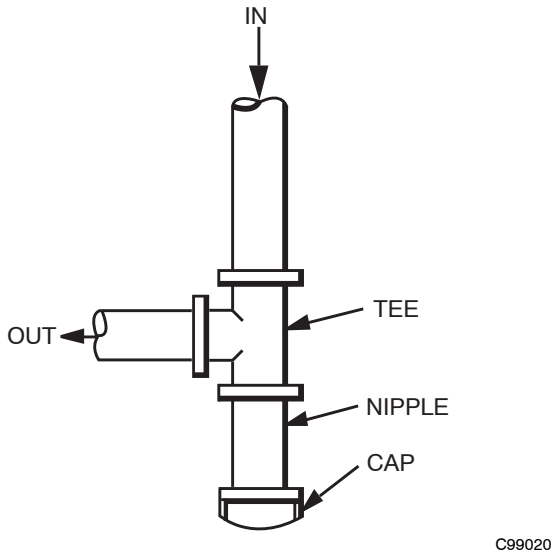

Fig. 7 - Sediment Trap

5. Install an accessible, external, manual main shutoff valve in gas supply pipe within 6 ft (1.8 m) of heating section.
6. Install ground-joint union close to heating section between unit manual shutoff and external manual main shut-off valve.
7. Pressure test all gas piping in accordance with local and national plumbing and gas codes before connecting piping to unit.

NOTE: Pressure test the gas supply system after the gas supply piping is connected to the gas valve. The supply piping must be disconnected from the gas valve during the testing of the piping systems when test pressure is in excess of 0.5 psig. Pressure test the gas supply piping system at pressures equal to or less than 0.5 psig. The unit heating section must be isolated from the gas piping system by closing the external main manual shutoff valve and slightly opening the ground-joint union.

⚠ WARNING

FIRE OR EXPLOSION HAZARD

Failure to follow this warning could result in personal injury, death and/or property damage.

-Connect gas pipe to unit using a backup wrench to avoid damaging gas controls.

-Never purge a gas line into a combustion chamber. Never test for gas leaks with an open flame. Use a commercially available soap solution made specifically for the detection of leaks to check all connections.

-Use proper length of pipe to avoid stress on gas control manifold.

-If a flexible connector is required or allowed by authority having jurisdiction, black iron pipe shall be installed at furnace gas valve and extend a minimum of 2 in. (51 mm) outside furnace casing.

-If codes allow a flexible connector, always use a new connector. do not use a connector which has previously serviced another gas appliance.

8. Check for gas leaks at the field-installed and factory-installed gas lines after all piping connections have been completed. Use a commercially available soap solution made specifically for the detection of leaks (or method specified by local codes and/or regulations).

Step 9 — Install Duct Connections

The unit has duct flanges on the supply- and return-air openings on the side and bottom of the unit. For downshot applications, the ductwork connects to the roof curb (See Fig. 2 and 3 for connection sizes and locations).

Configuring Units for Downflow (Vertical) Discharge

⚠ WARNING

ELECTRICAL SHOCK HAZARD

Failure to follow this warning could result in personal injury or death.

Before installing or servicing system, always turn off main power to system. There may be more than one disconnect switch. Tag the disconnect switch with a suitable warning label.

1. Open all electrical disconnects before starting any service work.
2. Remove horizontal (metal) duct covers to access vertical (downflow) discharge duct knockouts in unit basepan. (See Fig. 8.)
3. Using Fig. 9 as a guide, proceed to cut out the downflow duct panels.
4. Drill 1/2 in. (13 mm) diameter or larger holes in all four corners of duct panels.

NOTE: On large chassis units remove sheet metal shields on panels by using a crew driver to shear off retainers and discard.

5. On left and side supply duct opening side with keyhole or single bladed hacksaw cut out panel along “V” groove.
6. On right side, with keyhole or single blade hacksaw, with teeth facing up and starting from the front and moving to the rear, cut along “V” groove.
7. Now with three sides cut, flex panel up and down to remove.
8. Replace side access panel and duct cover.
9. After completing unit conversion, perform all safety checks and power up unit.

Alternate Method

1. Open all electrical disconnects and install lockout tag before starting any service work.
2. Remove horizontal (metal) ductcovers to access vertical (downflow) discharge duct knockouts in unit basepan. (See Fig. 8.)
3. Leave top shipping crate on unit during this method.
4. Tip unit over on the front side (access panels) so the bottom of the base pan is accessible.
5. Drill two holes diagonally opposed, of suitable size to accommodate jigsaw or reciprocating saw. (See Fig. 9.)

NOTE: On large chassis units remove sheet metal shields on panels by using a screw driver to shear off retainers and discard.

⚠ CAUTION

UNIT COMPONENT DAMAGE HAZARD

Failure to follow this caution may result in damage to the unit being installed.

When cutting duct panels, do not contact or damage any internal components (heat exchanger, electric heat). Do not use a saw blade that protrudes more than 1 in. (25 mm) into unit.

⚠ CAUTION

PROPERTY DAMAGE HAZARD

Failure to follow this caution may result in property damage.

Collect ALL screws that were removed. **Do not** leave screws on rooftop as permanent damage to the roof may occur.

6. Using a suitable saw cut along "V" groove and remove duct panels.
7. Tip unit back onto its base and replace duct covers.
8. After completing unit conversion, perform all safety checks and power up unit.

NOTE: The design and installation of the duct system must be in accordance with the standards of the NFPA for installation of nonresidence-type air conditioning and ventilating systems, NFPA 90A or residence-type, NFPA 90B; and/or local codes and ordinances.

Adhere to the following criteria when selecting, sizing, and installing the duct system:

1. Units are shipped for horizontal duct installation (by removing duct covers).
2. Select and size ductwork, supply-air registers, and return-air grilles according to American Society of Heating, Refrigeration and Air Conditioning Engineers (ASHRAE) recommendations.
3. Use flexible transition between rigid ductwork and unit to prevent transmission of vibration. The transition may be screwed or bolted to duct flanges. Use suitable gaskets to ensure weather tight and airtight seal.
4. All units must have field-supplied filters or accessory filter rack installed in the return-air side of the unit. Recommended sizes for filters are shown in Table 1.
5. Size all ductwork for maximum required airflow (either heating or cooling) for unit being installed. Avoid abrupt duct size increases or decreases or performance may be affected.

Table 1 – Physical Data - Unit 48VT-A

Unit Size	24040	24060	30040	30060	36060	36090
Nominial Capacity – ton	2	2	2.5	2.5	3	3
Shipping Weight (lb)	354	354	346	346	426	426
(kg)	161	161	157	157	193	193
Compressor Quantity	1					
Type	Scroll					
Refrigerant	R–410A					
Refrigerant Quantity (lb)	11.1	11.1	10.3	10.3	9.9	9.9
Quantity (kg)	5.0	5.0	4.7	4.7	4.5	4.5
Refrigerant Metering Device	Indoor TXV, Outdoor Dual Accuraters					
Orofice OD (in)	0.032 (2)	0.032 (2)	0.037 (2)	0.037 (2)	0.038 (2)	0.038 (2)
(mm)	0.81 (2)	0.81 (2)	0.94 (2)	0.94 (2)	0.97 (2)	0.97 (2)
Outdoor Coil						
Rows… Fins/in,	2…21	2…21	2…21	2…21	2…21	2…21
face area (sq. ft.)	13.6	13.6	13.6	13.6	13.6	13.6
Outdoor Fan						
Nominal Airflow (cfm)	2500	2500	2700	2700	3100	3100
Diameter (in.)	24	24	24	24	26	26
Diameter (mm)	610	610	610	610	660	660
Motor hp (rpm)	1/10 (810)	1/10 (810)	1/5 (810)	1/5 (810)	1/5 (810)	1/5 (810)
Indoor Coil						
Rows… Fins/in,	3…17	3…17	3…17	3…17	3…17	3…17
face area (sq. ft.)	3.7	3.7	3.7	3.7	4.7	4.7
Indoor Blower						
Nominal Airflow (cfm)	800	800	1000	1000	1200	1200
Size (in.)	10 x 10	10 x 10	10 x 10	10 x 10	11 x 10	11 x 10
Size (mm)	254 x 254	254 x 254	254 x 254	254 x 254	279 x 254	279 x 254
Motor hp	1/2	1/2	1/2	1/2	3/4	3/4
Furnace Section*						
Burner Orifice						
Natural Gas Qty…Drill Size	2…44	2…38	2…44	2…38	2…38	3…38
Propane Gas Qty…Drill Size	2…55	2…53	2…55	2…53	2…53	3…53
High Pressure Switch (psig)						
Cutout	650 +/– 15					
Reset (Auto)	420 +/– 25					
Loss–of–Charge/Low Pressure Switch (psig)						
Cutout	20 +/– 5					
Reset (Auto)	45 +/– 10					
Return Air Filters†‡						
disposable (in)	20x20x1		20x24x1		24x30x1	
(mm)	508x508x25		508x610x25		610x762x25	

*Based on altitude of 0 to 2000 ft (0–610 m).

†Required filter sizes shown are based on the larger of the ARI (Air Conditioning and Refrigeration Institute) rated cooling airflow or the heating airflow velocity of 300 ft/minute for high–capacity type. Air filter pressure drop for non–standard filters must not exceed 0.08 IN. W.C.

‡ If using accessory filter rack refer to filter rack installation instructions for correct filter size and quantity.

Table 1 - Physical Data - Unit 48VT-A Cont'd)

Unit Size	42060	42090	48090	48115	48130	60090	60115	60130
Nominial Capacity – ton	3.5	3.5	4	4	4	5	5	5
Shipping Weight (lb)	472	472	460	460	460	506	506	506
(kg)	214	214	209	209	209	230	230	230
Compressor Quantity	1							
Type	Scroll							
Refrigerant	R–410A							
Refrigerant Quantity (lb)	11.3	11.3	12.5	12.5	12.5	15.2	15.2	15.2
Quantity (kg)	5.1	5.1	5.7	5.7	5.7	6.9	6.9	6.9
Refrigerant Metering Device	Indoor TXV, Outdoor Dual Accuraters							
Orofice OD (in)	0.040 (2)	0.040 (2)	0.040 (2)	0.040 (2)	0.040 (2)	0.049 (2)	0.049 (2)	0.049 (2)
(mm)	1.02 (2)	1.02 (2)	1.02 (2)	1.02 (2)	1.02 (2)	1.24 (2)	1.24 (2)	1.24 (2)
Outdoor Coil								
Rows… Fins/in,	2…21	2…21	2…21	2…21	2…21	2…21	2…21	2…21
face area (sq. ft.)	17.5	17.5	17.5	17.5	17.5	23.3	23.3	23.3
Outdoor Fan								
Nominal Airflow (cfm)	3100	3100	3100	3100	3100	3500	3500	3500
Diameter (in.)	26	26	26	26	26	26	26	26
Diameter (mm)	660	660	660	660	660	660	660	660
Motor hp	1/5	1/5	1/5	1/5	1/5	1/4	1/4	1/4
Motor (rpm)	(810)	(810)	(810)	(810)	(810)	(810)	(810)	(810)
Indoor Coil								
Rows… Fins/in,	3…17	3…17	3…17	3…17	3…17	3…17	3…17	3…17
face area (sq. ft.)	4.7	4.7	5.6	5.6	5.6	5.6	5.6	5.6
Indoor Blower								
Nominal Airflow (cfm)	1400	1400	1600	1600	1600	1750	1750	1750
Size (in.)	11 x 10	11 x 10	11 x 10	11 x 10	11 x 10	11 x 10	11 x 10	11 x 10
Size (mm)	279 x 254	279 x 254	279 x 254	279 x 254	279 x 254	279 x 254	279 x 254	279 x 254
Motor hp	3/4	3/4	1	1	1	1	1	1
Furnace Section*								
Burner Orifice								
Natural Gas Qty…Drill Size	2…38	3…38	3…38	3…33	3…31	3…38	3…33	3…31
Propane Gas Qty…Drill Size	2…53	3…53	3…53	3…51	3…49	3…53	3…51	3…49
High Pressure Switch (psig)								
Cutout	650 +/– 15							
Reset (Auto)	420 +/– 25							
Loss–of–Charge/Low Pressure Switch (psig)								
Cutout	20 +/– 5							
Reset (Auto)	45 +/– 10							
Return Air Filters†‡								
disposable (in)	24x30x1		24x36x1					
(mm)	610x762x25		610x914x25					

*Based on altitude of 0 to 2000 ft (0–610 m).

†Required filter sizes shown are based on the larger of the ARI (Air Conditioning and Refrigeration Institute) rated cooling airflow or the heating airflow velocity of 300 ft/minute for high–capacity type. Air filter pressure drop for non–standard filters must not exceed 0.08 IN. W.C.

‡ If using accessory filter rack refer to filter rack installation instructions for correct filter size and quantity.

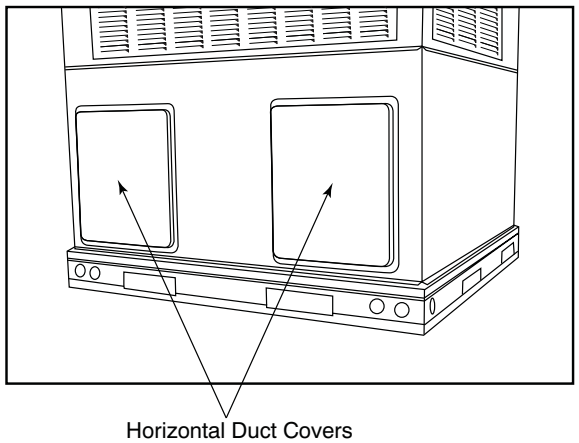

A09076

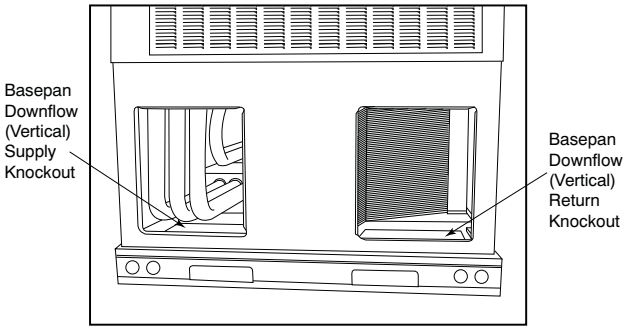

A09077

Fig. 8 - Supply and Return Duct Opening

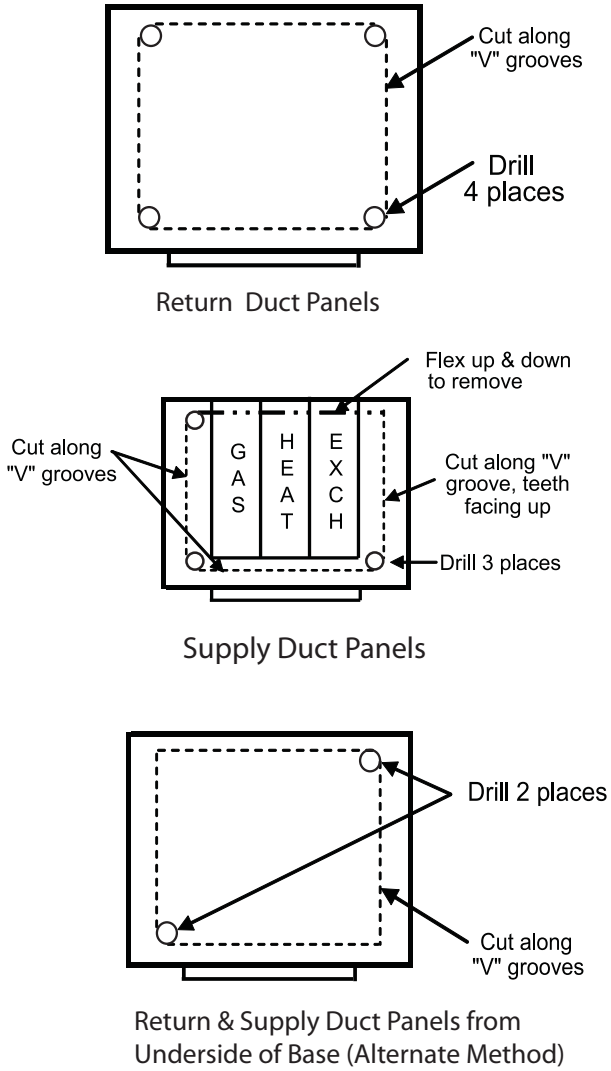

A09420

Fig. 9 - Vertical (Downflow) Discharge Duct Knockouts

Table 2 – Maximum Gas Flow Capacity*

NOMINAL IRON PIPE, SIZE (IN.)	INTERNAL DIAMETER (IN.)	LENGTH OF PIPE, FT (m)†													
		10 (3.0)	20 (6.1)	30 (9.1)	40 (12.2)	50 (15.2)	60 (18.3)	70 (21.3)	80 (24.4)	90 (27.4)	100 (30.5)	125 (31.1)	150 (45.7)	175 (53.3)	200 (61.0)
1/2	.622	175	120	97	82	73	66	61	57	53	50	44	40	—	—
3/4	.824	360	250	200	170	151	138	125	118	110	103	93	84	77	72
1	1.049	680	465	375	320	285	260	240	220	205	195	175	160	145	135
1–1/4	1.380	1400	950	770	600	580	530	490	460	430	400	360	325	300	280
1–1/2	1.610	2100	1460	1180	990	900	810	750	690	650	620	550	500	460	430

* Capacity of pipe in cu ft of gas per hr for gas pressure of 0.5 psig or less. Pressure drop of 0.5–IN. W.C. (based on a 0.60 specific gravity gas). Refer to Table 2 and the NFGC NFPA 54/ANSI Z 223.1.

† This length includes an ordinary number of fittings.

Table 3 – Heating Inputs

HEATING INPUT (BTUH)	NUMBER OF ORIFICES	GAS SUPPLY PRESSURE (IN. W.C.)				MANIFOLD PRESSURE (IN. W.C.)	
		Natural†		Propane*†			
		Min	Max	Min	Max	Natural†	Propane*†
40,000	2	4.0	13.0	11.0	13.0	3.2~3.8	10.0~11.0
60,000	2	4.0	13.0	11.0	13.0	3.2~3.8	10.0~11.0
90,000	3	4.0	13.0	11.0	13.0	3.2~3.8	10.0~11.0
115,000	3	4.0	13.0	11.0	13.0	3.2~3.8	10.0~11.0
130,000	3	4.0	13.0	11.0	13.0	3.2~3.8	10.0~11.0

*When a unit is converted to propane, different size orifices must be used. See separate, natural–to–propane conversion kit instructions.

†Based on altitudes from sea level to 2000 ft (610 m) above sea level. In th e U.S.A. for altitudes above 2000 ft (610 m), reduce input rating 4 percent for each additional 1000 ft (305 m) above sea level. In Canada, from 2000 ft (610 m) above sea level to 4500 ft (1372 m) above sea level, derate the unit 10 percent.

6. Adequately insulate and weatherproof all ductwork located outdoors. Insulate ducts passing through unconditioned space, and use vapor barrier in accordance with latest issue of Sheet Metal and Air Conditioning Contractors National Association (SMACNA) and Air Conditioning Contractors of America (ACCA) minimum installation standards for heating and air conditioning systems. Secure all ducts to building structure.
7. Flash, weatherproof, and vibration-isolate all openings in building structure in accordance with local codes and good building practices.

Step 10 — Install Electrical Connections

⚠ WARNING

ELECTRICAL SHOCK HAZARD

Failure to follow this warning could result in personal injury or death.

The unit cabinet must have an uninterrupted, unbroken electrical ground. This ground may consist of an electrical wire connected to the unit ground screw in the control compartment, or conduit approved for electrical ground when installed in accordance with NEC, NFPA 70 National Fire Protection Association (latest edition) (in Canada, Canadian Electrical Code CSA C22.1) and local electrical codes.

⚠ CAUTION

UNIT COMPONENT DAMAGE HAZARD

Failure to follow this caution may result in damage to the unit being installed.

1. Make all electrical connections in accordance with NEC NFPA 70 (latest edition) and local electrical codes governing such wiring. In Canada, all electrical connections must be in accordance with CSA standard C22.1 Canadian Electrical Code Part 1 and applicable local codes. Refer to unit wiring diagram.
2. Use only copper conductor for connections between field-supplied electrical disconnect switch and unit. DO NOT USE ALUMINUM WIRE.
3. Be sure that high-voltage power to unit is within operating voltage range indicated on unit rating plate. On 3-phase units, ensure phases are balanced within 2 percent. Consult local power company for correction of improper voltage and/or phase imbalance.
4. Insulate low-voltage wires for highest voltage contained within conduit when low-voltage control wires are in same conduit as high-voltage wires.
5. Do not damage internal components when drilling through any panel to mount electrical hardware, conduit, etc.

High-Voltage Connections

When routing power leads into unit, use only copper wire between disconnect and unit. The high voltage leads should be in a conduit until they enter the duct panel; conduit termination at the duct panel must be watertight.

The unit must have a separate electrical service with a field-supplied, waterproof disconnect switch mounted at, or within sight from, the unit. Refer to the unit rating plate, NEC and local codes for maximum fuse/circuit breaker size and minimum circuit amps (ampacity) for wire sizing.

The field-supplied disconnect switch box may be mounted on the unit over the high-voltage inlet hole when the standard power and low-voltage entry points are used (See Fig. 2 and 3 for acceptable location).

See unit wiring label (Fig. 15 and 16) and Fig. 10 for reference when making high voltage connections. Proceed as follows to complete the high-voltage connections to the unit.

Single phase units:

1. Run the high-voltage (L1, L2) and ground lead into the control box.
2. Connect ground lead to chassis ground connection.
3. Locate the black and yellow wires connected to the line side of the contactor.
4. Connect field L1 to black wire on connection 11 of the compressor contactor.
5. Connect field wire L2 to yellow wire on connection 23 of the compressor contactor.

Three-phase units:

1. Run the high-voltage (L1, L2, L3) and ground lead into the control box.
2. Connect ground lead to chassis ground connection.
3. Locate the black and yellow wires connected to the line side of the contactor.
4. Connect field L1 to black wire on connection 11 of the compressor contactor.
5. Connect field wire L3 to yellow wire on connection 13 of the compressor contactor.
6. Connect field wire L2 to blue wire from compressor.

Special Procedures for 208-V Operation

⚠ WARNING

ELECTRICAL SHOCK HAZARD

Failure to follow this warning could result in personal injury or death.

Make sure the power supply to the unit is switched OFF before making any wiring changes. Tag the disconnect switch with a suitable warning label. With disconnect switch open, move black wire from transformer (3/16 in.) terminal marked 230 to terminal marked 200. This retaps transformer to primary voltage of 208 vac.

⚠ WARNING

ELECTRICAL SHOCK HAZARD

Failure to follow this warning could result in personal injury or death.

Before making any wiring changes, **make sure** the gas supply is switched off first. *Then* switch off the power supply to the unit and install lockout tag.

Control Voltage Connections

Do not use any type of power-stealing thermostat. Unit control problems may result.

Use no. 18 American Wire Gage (AWG) color-coded, insulated (35°C minimum) wires to make the control voltage connections between the thermostat and the unit. If the thermostat is located more than 100 ft (30.5 m) from the unit (as measured along the control voltage wires), use no. 16 AWG color-coded, insulated (35°C minimum) wires.

Locate the seven (eight on 3-phase) low voltage thermostat leads in 24 volt splice box. See Fig. 10 for connection diagram. Run the low-voltage leads from the thermostat, through the control wiring inlet hole grommet (Fig. 2 and 3), and into the low-voltage splice box. Provide a drip loop before running wires through panel. Secure and strain relief all wires so that they do not interfere with

operation of unit. A gray wire is standard on 3-phase unit for connection to an economizer.

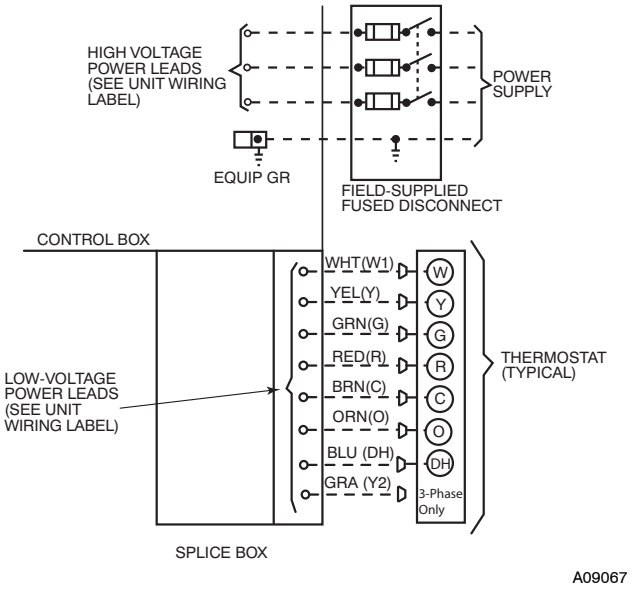

Fig. 10 - High and Control-Voltage Connections

Balance Point Setting-Thermidistat or Hybrid Thermostat

BALANCE POINT TEMPERATURE-The "balance point" temperature is a setting which affects the operation of the heating mode. This is a field-selected input temperature (range 5 to 55°F) (-15 to 12°C) where the Thermidistat or dual fuel thermostat will monitor outdoor air temperature and decide whether to enable or disable the heat pump. If the outdoor temperature is above the "balance point", the heat pump will energize first to try to satisfy the indoor temperature demand. If the heat pump does not make a sufficient improvement within a reasonable time period (i.e. 15 minutes), then the gas furnace will come on to satisfy the indoor temperature demand. If the outdoor temperature is below the "balance point", the heat pump will not be allowed to operate (i.e. locked out), and the gas furnace will be used to satisfy the indoor temperature. There are three separate concepts which are related to selecting the final "balance point" temperature. Read each of the following carefully to determine the best "balance point" in a hybrid installation:

1. Capacity Balance Temperature: This is a point where the heat pump cannot provide sufficient capacity to keep up with the indoor temperature demand because of declining outdoor temperature. At or below this point, the furnace is needed to maintain proper indoor temperature.
2. Economic Balance Temperature: Above this point, the heat pump is the most cost efficient to operate, and below this point the furnace is the most cost efficient to operate. This can be somewhat complicated to determine and it involves knowing the cost of gas and electricity, as well as the efficiency of the furnace and heat pump. For the most economical operation, the heat pump should operate above this temperature (assuming it has sufficient capacity) and the furnace should operate below this temperature.
3. Comfort Balance Temperature: When the heat pump is operating below this point, the indoor supply air feels uncomfortable (i.e. too cool). This is purely subjective and will depend on the homeowner's idea of comfort. Below this temperature the gas furnace should operate in order to satisfy the desire for indoor comfort.

Transformer Protection

The transformer is of the energy-limiting type. It is set to withstand a 30-sec. overload or shorted secondary condition. If an overload or short is present, correct overload condition and check for blown fuse on gas control board or Interface Fan Board. Replace fuse as required with correct size and rating.

PRE-START-UP

⚠ WARNING

FIRE, EXPLOSION, ELECTRICAL SHOCK HAZARD

Failure to follow this warning could result in personal injury, death or property damage.

1. Follow recognized safety practices and wear protective goggles when checking or servicing refrigerant system.
2. Do not operate compressor or provide any electric power to unit unless compressor terminal cover is in place and secured.
3. Do not remove compressor terminal cover until all electrical sources are disconnected and tagged.
4. Relieve and recover all refrigerant from system before touching or disturbing anything inside terminal box if refrigerant leak is suspected around compressor terminals.
5. Never attempt to repair soldered connection while refrigerant system is under pressure.
6. Do not use torch to remove any component. System contains oil and refrigerant under pressure.
   To remove a component, wear protective goggles and proceed as follows:
   a. Shut off electrical power to unit and install lockout tag.
   b. Relieve and reclaim all refrigerant from system using both high- and low-pressure ports.
   c. Cut component connecting tubing with tubing cutter and remove component from unit.
   d. Carefully unsweat remaining tubing stubs when necessary. Oil can ignite when exposed to torch flame.

Proceed as follows to inspect and prepare the unit for initial start-up:

1. Remove access panels (see Fig. 19).
2. Read and follow instructions on all WARNING, CAUTION, and INFORMATION labels attached to, or shipped with, unit.
3. Make the following inspections:
   a. Inspect for shipping and handling damages such as broken lines, loose parts, disconnected wires, etc.
   b. Inspect for oil at all refrigerant tubing connections and on unit base. Detecting oil generally indicates a refrigerant leak.
   c. Leak test all refrigerant tubing connections using electronic leak detector, halide torch, or liquid-soap solution. If a refrigerant leak is detected, see the Check for Refrigerant Leaks section.
   d. Inspect all field- and factory-wiring connections. Be sure that connections are completed and tight.
   e. Ensure wires do not touch refrigerant tubing or sharp sheet metal edges.
   f. Inspect coil fins. If damaged during shipping and handling, carefully straighten fins with a fin comb.

⚠ WARNING

FIRE, EXPLOSION HAZARD

Failure to follow this warning could result in personal injury, death or property damage.

Do not purge gas supply into the combustion chamber. Do not use a match or other open flame to check for gas leaks. Use a commercially available soap solution made specifically for the detection of leaks to check all connections.

4. Verify the following conditions:
   a. Make sure gas line is free of air. Before lighting the unit for the first time, perform the following with the gas valve in the "OFF" position:

NOTE: If the gas supply pipe was not purged before connecting the unit, it will be full of air. It is recommended that the ground joint union be loosened, and the supply line be allowed to purge until the odor of gas is detected. Never purge gas lines into a combustion chamber. Immediately upon detection of gas odor, retighten the union. Allow 5 minutes to elapse, then light unit.

   b. Make sure that condenser-fan blade is correctly positioned in fan orifice. Leading edge of condenser-fan blade should be 1/2 in. (12 mm) maximum from fan orifice.
   c. Make sure that air filter(s) is in place.
   d. Make sure that condensate drain trap is filled with water to ensure proper drainage.
   e. Make sure that all tools and miscellaneous loose parts have been removed.

START-UP

Step 1 — Check for Refrigerant Leaks

Proceed as follows to locate and repair a refrigerant leak and to charge the unit:

1. Locate leak and make sure that refrigerant system pressure has been relieved and reclaimed from both high- and low-pressure ports.
2. Repair leak following Refrigerant Service procedures.

NOTE: Install a bi-flow filter drier whenever the system has been opened for repair.

3. Add a small charge of R-410A refrigerant vapor to system and leak-test unit.
4. Recover refrigerant from refrigerant system and evacuate to 500 microns if no additional leaks are not found.
5. Charge unit with Puron (R-410A) refrigerant, using an electronic scale. Refer to unit rating plate for required charge.

Step 2 — Unit Sequence of Operation

48VT-A Sequence of Operation

a. CONTINUOUS FAN
   (1.) Thermostat closes circuit R to G energizing the blower motor for continuous fan.

b. COOLING MODE
   (1.) If indoor temperature is above temperature set point thermostat closes circuits R to G, R to Y and R to O-The unit delivers cooling airflow.

c. HEAT PUMP HEATING MODE
   Outdoor temperature above balance point setpoint of thermostat.
   (1.) On a call for heating, terminals "Y" and "G" of the Hybrid thermostat are energized. The "Y" signal is sent to the Defrost Board (DB) terminal "Y". The DB has a built in five minute anti-short cycle timer which will not allow the compressor to restart before the time delay has expired.
   (2.) "T2" energizes the compressor contactor via the High Pressure Switch (HPS) and Low Pressure Switch (LPS). The compressor and outdoor fan start. Thermostat "G" energizes the Interface Fan Board terminal "G". The blower motor is energized through contacts of the IFB.
   (3.) When the thermostat removes the "Y" and "G" calls, the compressor contactor and outdoor fan are de-energized. The evaporator motor is de-energized after a 90 sec. delay.

d. GAS HEATING MODE
   Outdoor temperature below balance point setpoint of thermostat.

Heating Sequence of Operation

(See Fig. 15 and 16 and unit wiring label.)

On a call for heating, terminal W of the thermostat is energized, starting the induced-draft motor. When the pressure switch senses that the induced-draft motor is moving sufficient combustion air, the burner sequence begins. This function is performed by the integrated gas unit controller (IGC). The indoor (evaporator)-fan motor is energized 45 sec after flame is established. When the thermostat is satisfied and W is de-energized, the burners stop firing and the indoor (evaporator) fan motor shuts off after a 45-sec time-off delay. Please note that the IGC has the capability to automatically reduce the indoor fan motor on delay and increase the indoor fan motor off delay in the event of high duct static and/or partially-clogged filter.

NOTE: An LED (light-emitting diode) indicator is provided on the control board to monitor operation. The control board is located by removing the burner access panel (see Fig. 19). During normal operation, the LED is continuously on.

Step 3 — Start-up Heating and Make Adjustments

⚠ CAUTION

UNIT COMPONENT DAMAGE HAZARD

Failure to follow this caution may result in damage to the unit being installed.

Complete the required procedures given in the Pre-Start-Up section before starting the unit. Do not jumper any safety devices when operating the unit.

Complete the required procedures given in the Pre-Start-Up section before starting the unit. Do not jumper any safety devices when operating the unit. Make sure that burner orifices are properly aligned. Unstable operation my occur when the burner orifices in the manifold are misaligned.

Follow the lighting instructions on the heating section operation label (located on the inside of the control access panel) to start the heating section.

NOTE: Make sure that gas supply has been purged, and that all gas piping has been checked for leaks.

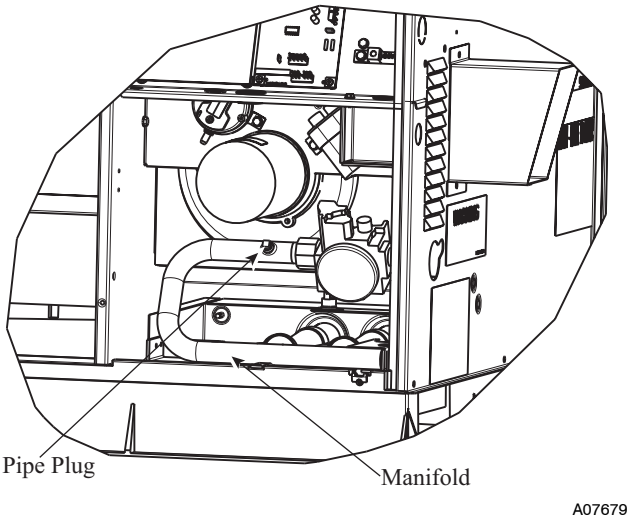

Fig. 11 - Burner Assembly

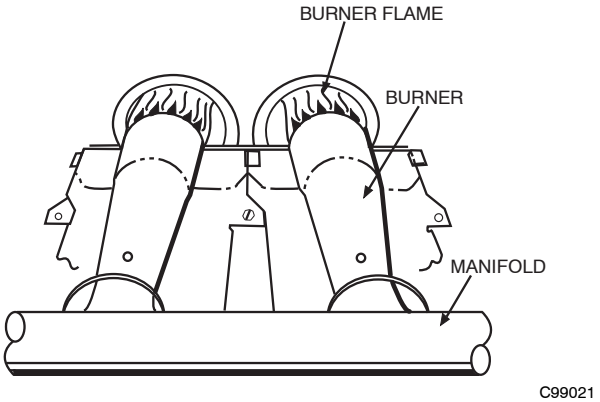

Fig. 12 - Monoport Burner

Check Heating Control

Start and check the unit for proper heating control operation as follows (see furnace lighting instructions located on the inside of the control access panel):

1. Place room thermostat SYSTEM switch in the HEAT position and the fan switch is placed in AUTO position.
2. Set the heating temperature control of the thermostat above room temperature.
3. The induced-draft motor will start.
4. On a call for heating, the main burner should light within 5 sec. of the spark being energized. If the burners do not light, there is a 22-sec. delay before another 5-sec. try. If the burners still do not light, this sequence is repeated. If the burners do not light within 15 minutes from the initial call for heat, there is a lockout. To reset the control, break the 24-v power to W.
5. The evaporator fan will turn on 45 sec. after the flame has been established. The evaporator fan will turn off 45 sec. after the thermostat has been satisfied. Please note that the integrated gas unit controller (IGC) has the capability to automatically reduce the evaporator "ON" delay and increase the evaporator "OFF" delay in the event of high duct static and/or partially-clogged filter.

Check Gas Input

Check gas input and manifold pressure after unit start-up (See Table 3). If adjustment is required proceed as follows:

- The rated gas inputs shown in Table 3 are for altitudes from sea level to 2000 ft (610 m) above sea level. These inputs are based on natural gas with a heating value of 1025 Btu/ft^3 at 0.60 specific gravity, or propane gas with a heating value of 2500 Btu/ft^3 at 1.5 specific gravity.

IN THE U.S.A.:

The input rating for altitudes above 2,000 ft (610 m) must be reduced by 4% for each 1,000 ft (305 m) above see level.

For installations below 2,000 ft (610 m), refer to the unit rating plate.

For installations above 2,000 ft (610 m) multiply the input by on the rating plate by the derate multiplier in Table 4 for correct input rate.

Table 4 – Altitude Derate Multiplier for U.S.A.*

ALTITUDE FT (M)	PERCENT OF DERATE	DERATE MULTIPLIER FACTOR†
0–2000 (0–610)	0	1.00
2001–3000* (610–914)	8–12	0.90
3001–4000 (315–1219)	12–16	0.86
4001–5000 (1220–1524)	16–20	0.82
5001–6000 (1524–1829)	20–24	0.78
6001–7000 (1829–2134)	24–28	0.74
7001–8000 (2134–2438)	28–32	0.70
8001–9000 (2439–2743)	32–36	0.66
9001–10,000 (2744–3048)	36–40	0.62

* In Canada see Canadian Altitude Adjustment.
†Derate multiplier factors are based on midpoint altitude for altitude range.

IN CANADA:

The input rating for altitudes from 2,000 to 4,500 ft (610 m to 1372 m) above sea level must be derated 10% by an authorized Gas Conversion Station or Dealer.

EXAMPLE:

90,000 Btu/hr Input Furnace Installed at 4300 ft (1311 m).

Furnace Input Rate at Sea Level	X	Derate Multiplier Factor	=	Furnace Input Rate at Installation Altitude
90,000	X	0.90	=	81,000

When the gas supply being used has a different heating value or specific gravity, refer to national and local codes, or contact your distributor to determine the required orifice size.

⚠ CAUTION

UNIT DAMAGE HAZARD

Failure to follow this caution may result in reduced unit and/or component life.

Do Not redrill an orifice. Improper drilling (burrs, out-of-round holes, etc.) can cause excessive burner noise and misdirection of burner flame. If orifice hole appears damaged or it is suspected to have been redrilled, check orifice hole with a numbered drill bit of correct size.

Adjust Gas Input

The gas input to the unit is determined by measuring the gas flow at the meter or by measuring the manifold pressure. Measuring the gas flow at the meter is recommended for natural gas units. The manifold pressure must be measured to determine the input of propane gas units.

Measure Gas Flow (Natural Gas Units)

Minor adjustment to the gas flow can be made by changing the manifold pressure. The manifold pressure must be maintained between 3.2 and 3.8 IN. W.C.

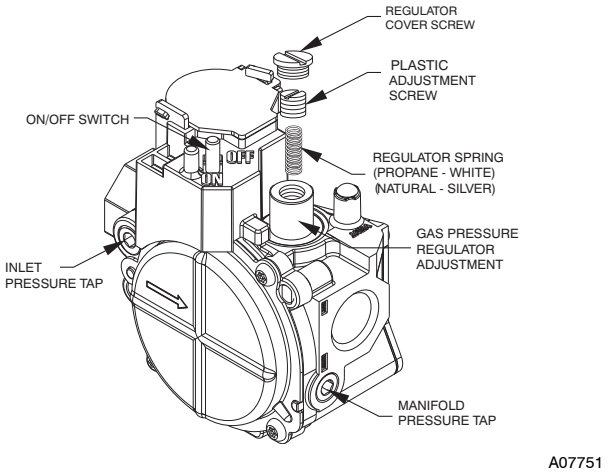

Fig. 13 - Single-Stage Gas Valve

If larger adjustments are required, change main burner orifices following the recommendations of national and local codes.

NOTE: All other appliances that use the same meter must be turned off when gas flow is measured at the meter.

Proceed as follows:

1. Turn off gas supply to unit.
2. Remove pipe plug on manifold (See Fig. 11) and connect manometer. Turn on gas supply to unit.
3. Record number of seconds for gas meter test dial to make one revolution.
4. Divide number of seconds in Step 3 into 3600 (number of seconds in one hr).
5. Multiply result of Step 4 by the number of cubic feet (cu ft) shown for one revolution of test dial to obtain cubic feet (cu ft) of gas flow per hour.
6. Multiply result of Step 5 by Btu heating value of gas to obtain total measured input in Btuh. Compare this value with heating input shown in Table 3 (Consult the local gas supplier if the heating value of gas is not known).

EXAMPLE: Assume that the size of test dial is 1 cu ft, one revolution takes 32 sec, and the heating value of the gas is 1050 Btu/ft^3. Proceed as follows:

1. 32 sec. to complete one revolution.
2. 3600 ÷ 32 = 112.5.
3. 112.5 x 1 =112.5 ft^3 of gas flow/hr.
4. 112.5 x 1050 = 118,125 Btuh input.

If the desired gas input is 115,000 Btuh, only a minor change in the manifold pressure is required.

Observe manifold pressure and proceed as follows to adjust gas input:

1. Remove regulator cover screw over plastic adjustment screw on gas valve (See Fig. 13).
2. Turn plastic adjustment screw clockwise to increase gas input, or turn plastic adjustment screw counterclockwise to decrease input (See Fig. 13). Manifold pressure must be between 3.2 and 3.8 IN. W.C.

⚠ WARNING

FIRE AND UNIT DAMAGE HAZARD

Failure to follow this warning could result in personal injury or death and/or property damage.

Unsafe operation of the unit may result if manifold pressure is outside this range.

3. Replace regulator cover screw on gas valve (See Fig. 13).
4. Turn off gas supply to unit. Remove manometer from pressure tap and replace pipe plug on gas valve. (See Fig. 11.) Turn on gas to unit and check for leaks.

Measure Manifold Pressure (Propane Units)

Refer to propane kit installation instructions for properly checking gas input.

NOTE: For installations below 2,000 ft (610 m), refer to the unit rating plate for proper propane conversion kit. For installations above 2,000 ft (610 m), contact your distributor for proper propane conversion kit.

Check Burner Flame

With control access panel (see Fig. 19) removed, observe the unit heating operation. Watch the burner flames to see if they are light blue and soft in appearance, and that the flames are approximately the same for each burner. Propane will have blue flame (See Fig. 12). Refer to the Maintenance section for information on burner removal.

Normal Operation

An LED (light-emitting diode) indicator is provided on the integrated gas unit controller (IGC) to monitor operation. The IGC is located by removing the control access panel (see Fig. 19). During normal operation, the LED is continuously on (See Table 5 for error codes).

Airflow and Temperature Rise

The heating section for each size unit is designed and approved for heating operation within the temperature-rise range stamped on the unit rating plate.

Table 10 shows the approved temperature rise range for each heating input, and the air delivery cfm at various temperature rises for a given external static pressure. The heating operation airflow must produce a temperature rise that falls within the approved range.

Refer to Indoor Airflow and Airflow Adjustments section to adjust heating airflow when required.

Limit Switches

Normally closed limit switch (LS) completes the control circuit. Should the leaving-air temperature rise above the maximum allowable temperature, the limit switch opens and the control circuit "breaks." Any interruption in the control circuit instantly closes the gas valve and stops gas flow to the burners. The blower motor continues to run until LS resets.

When the air temperature at the limit switch drops to the low-temperature setting of the limit switch, the switch closes and completes the control circuit. The direct-spark ignition system cycles and the unit returns to normal heating operation.

Table 5 – LED Indications

STATUS CODE	LED INDICATION
Normal Operation[2]	On
No Power Hardware Failure	Off
Limit Switch Fault	2 Flashes
Flame Sense Fault	3 Flashes
Four Consecutive Limit Switch Faults	4 Flashes
Ignition Lockout Fault	5 Flashes
Pressure Switch Fault	6 Flashes
Rollout Switch Fault	7 Flashes
Internal Control Fault	8 Flashes
Temporary 1 hr auto reset[1]	9 Flashes

NOTES:
1.This code indicates an internal processor fault that will reset itself in one hr. Fault can be caused by stray RF signals in the structure or nearby. This is a UL requirement.
2. LED indicates acceptable operation. Do not change ignition control board.
3. When W is energized the burners will remain on for a minimum of 60 sec.
4. If more than one error mode exists they will be displayed on the LED in sequence.

Rollout Switch

The function of the rollout switch is to close the main gas valve in the event of flame rollout. The switch is located above the main burners. When the temperature at the rollout switch reaches the maximum allowable temperature, the control circuit trips, closing the gas valve and stopping gas flow to the burners. The indoor (evaporator) fan motor (IFM) and induced draft motor continue to run until switch is reset. The IGC LED will display FAULT CODE 7.

Step 4 — Start-up Cooling and Make Adjustments

Complete the required procedures given in the Pre-Start-Up section before starting the unit. Do not jumper any safety devices when operating the unit. Do not operate the compressor when the outdoor temperature is below 40°F (4.4°C) (unless accessory low-ambient kit is installed). Do not rapid-cycle the compressor. Allow 5 minutes between on cycles to prevent compressor damage.

Checking Cooling Control Operation

Start and check the unit for proper cooling control operation as follows:

1. Place room thermostat SYSTEM switch in OFF position. Observe that blower motor starts when FAN switch is placed in ON position and shuts down when FAN switch is placed in AUTO position.
2. Place SYSTEM switch in COOL position and FAN switch in AUTO position. Set cooling control below room temperature. Observe that compressor, condenser fan, and evaporator blower motors start. Observe that cooling cycle shuts down when control setting is satisfied. The evaporator fan will continue to run for 90 sec.

IMPORTANT: Three-phase, scroll compressors units are direction oriented. Unit must be checked to ensure proper compressor 3-phase power lead orientation. If not corrected within 5 minutes, the internal protector will shut off the compressor. The 3-phase power leads to the unit must be reversed to correct rotation. When turning backwards, the difference between compressor suction and discharge pressures will be near zero.

Checking and Adjusting Refrigerant Charge

The refrigerant system is fully charged with Puron® (R-410A) refrigerant and is tested and factory sealed. Allow system to operate a minimum of 15 minutes before checking or adjusting charge.

NOTE: Adjustment of the refrigerant charge is not required unless the unit is suspected of not having the proper Puron® (R-410A) charge.

The charging label and the tables shown refer to system temperatures and pressures in cooling mode only. A refrigerant charging label is attached to the inside of the compressor access panel (see Fig. 19). The chart includes the required liquid line temperature at given discharge line pressures and outdoor ambient temperatures.

An accurate thermocouple- or thermistor-type thermometer, and a gauge manifold are required when using the subcooling charging method for evaluating the unit charge. Do not use mercury or small dial-type thermometers because they are not adequate for this type of measurement.

⚠ CAUTION

UNIT DAMAGE HAZARD

Failure to follow this caution may result in unit damage.

When evaluating the refrigerant charge, an indicated adjustment to the specified factory charge must always be very minimal. If a substantial adjustment is indicated, an abnormal condition exists somewhere in the cooling system, such as insufficient airflow across either coil or both coils.

Proceed as follows:

1. Remove caps from low- and high-pressure service fittings.
2. Using hoses with valve core depressors, attach low- and high-pressure gauge hoses to low- and high-pressure service fittings, respectively.
3. Start unit in Cooling Mode and let unit run until system pressures stabilize.
4. Measure and record the following:
   a. Outdoor ambient-air temperature (°F (°C) db).
   b. Liquid line temperature (°F (°C).
   c. Discharge (high-side) pressure (psig).
   d. Suction (low-side) pressure (psig) (for reference only).
5. Using "Cooling Charging Charts," compare outdoor-air temperature(°F (°C) db) with the discharge line pressure (psig) to determine desired system operating liquid line temperature (See Fig. 17).
6. Compare actual liquid line temperature with desired liquid line temperature. Using a tolerance of ± 2°F (±1.1°C), add refrigerant if actual temperature is more than 2°F (1.1°C) higher than proper liquid line temperature, or remove refrigerant if actual temperature is more than 2°F (1.1°C) lower than required liquid line temperature.

NOTE: If the problem causing the inaccurate readings is a refrigerant leak, refer to the Check for Refrigerant Leaks section.

Indoor Airflow and Airflow Adjustments

⚠ CAUTION

UNIT OPERATION HAZARD

Failure to follow this caution may result in unit damage.

For cooling operation, the recommended airflow is 350 to 450 cfm for each 12,000 Btuh of rated cooling capacity. For heating operation, the airflow must produce a temperature rise that falls within the range stamped on the unit rating plate.

NOTE: Be sure that all supply-and return-air grilles are open, free from obstructions, and adjusted properly.

⚠ WARNING

ELECTRICAL SHOCK HAZARD

Failure to follow this warning could result in personal injury or death.

Before making any indoor wiring adjustments, shut off gas supply. Then disconnect electrical power to the unit and install lockout tag before changing blower speed.

This unit has independent fan speeds for gas heating and cooling. In addition, this unit has the field-selectable capability to run two different cooling fan speeds: A normal cooling fan speed (350~400

CFM/Ton) and an enhanced dehumidification fan speed (As low as 320 CFM/Ton) for use with either a dehumidistat or a thermostat that supports dehumidification.

This unit is factory-set up for use with a single cooling fan speed. The cooling speed is marked "LOW" on the interface fan board (IFB) (Fig. 14) . The factory-shipped settings are noted in Table 10. There are 3 additional speed tap wires available for use in either gas heating or cooling (For color coding on the indoor fan motor leads, see Table 6). The additional 3 speed tap wires are shipped loose with vinyl caps and are located in the control box, near the interface fan board (IFB) (Fig. 14).

Gas Heating Fan Speed Set-up

To change the gas heating speed:

1. Remove the vinyl cap off of the desired speed tap wire (Refer to Table 6 for color coding). Table 10 shows the temperature rise associated with each fan speed for a given static pressure. Make sure that the speed chosen delivers a temperature rise within the rise range listed on the unit rating plate.
2. Remove the current speed tap wire from the "GAS HEAT" terminal on the interface fan board (IFB) (Fig.14) and place vinyl cap over the connector on the wire.
3. Connect the desired speed tap wire to the "GAS HEAT" terminal on the interface fan board (IFB).

Single Cooling Fan Speed Set-up (Dehumidification feature not used)

To change cooling speed:

1. Remove the vinyl cap off of the desired speed tap wire (Refer to Table 6 for color coding). Add the wet coil pressure drop in Table 8 to the system static to determine the correct cooling airflow speed in Table 10 that will deliver the nominal cooling airflow as listed in Table 1 for each size.
2. Remove the current speed tap wire from the "LOW" terminal on the interface fan board (IFB) (Fig. 14) and place vinyl cap over the connector on the wire.
3. Connect the desired speed tap wire to the "LOW" terminal on the interface fan board (IFB).

Two Cooling Fan Speeds Set-up (Dehumidification feature used)

IMPORTANT: Dehumidification control must open control circuit on humidity rise above set point.

Use of the dehumidification cooling fan speed requires use of either a 24 VAC dehumidistat or a thermostat which includes control of a 24 VAC dehumidistat connection. In either case, the dehumidification control must open the control circuit on humidity rise above the dehumidification set point. Dehumidification controls are available with the reverse logic; these must not be used.

1. Remove fan speed tap wire from the "LOW" terminal on the interface fan board (IFB) (Fig. 14).
2. Determine correct normal cooling fan speed for unit and application. Add the wet coil pressure drop in Table 8 to the system static to determine the correct cooling airflow speed in Table 10 that will deliver the nominal cooling airflow as listed in Table 1 for each size.
3. Remove the vinyl cap off of the desired speed tap wire (Refer to Table 6 for color coding) for the normal cooling fan speed and place desired speed tap wire on "HIGH" on the interface board.
4. Refer to airflow tables (Table 10) to determine allowable speeds for the dehumidification cooling fan speed. In Table 10, speeds that are not allowed for dehumidification cooling are shaded.
5. Remove the vinyl cap off of the desired speed tap wire (Refer to Table 6 for color coding) for the dehumidification cooling fan speed and place desired speed tap wire on the "LOW" connection on the interface board (IFB). Verify that static pressure is in the acceptable range for the speed tap to be used for dehumidification cooling.
6. Use any spare vinyl plugs to cap any unused speed tap wires.

NOTE: For heat pump operation, the recommended airflow is 350 to 450 CFM for each 12,000 Btuh of rated cooling capacity.

Continuous Fan Operation

When the DEHUM feature is not used, the continuous fan speed will be the same as cooling fan speed. When the DEHUM feature is used, the continuous fan will operate on IFB "LOW" speed when the DH control lead is not energized, or IFB "HIGH" speed when the DH lead is energized (see Fig. 14).

Table 6 – Color Coding for Indoor Fan Motor Leads

Black = High Speed
Orange = Med–High Speed
Red = Med Speed
Pink = Med–Low Speed
Blue = Low Speed

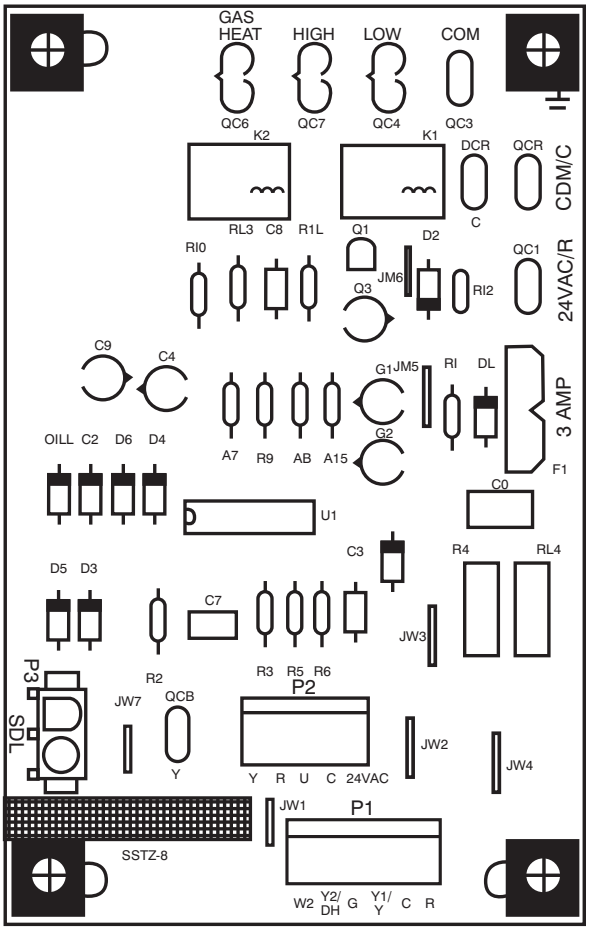

A09058

Fig. 14 - Interface Fan Board (IFB)

Table 7 – Filter Pressure Drop Table (IN. W.C.)

FILTER SIZE in. (mm)	CFM																		
	500	600	700	800	900	1000	1100	1200	1300	1400	1500	1600	1700	1800	1900	2000	2100	2200	2300
20X20X1 (508X508X25)	0.05	0.07	0.08	0.1	0.12	0.13	0.14	0.15	—	—	—	—	—	—	—	—	—	—	—
20X24X1 (508X610x25)	—	—	—	—	0.09	0.10	0.11	0.13	0.14	0.15	0.16	—	—	—	—	—	—	—	—
24X30X1 (610X762x25)	—	—	—	0.04	0.05	0.06	0.07	0.07	0.08	0.09	0.1	—	—	—	—	—	—	—	—
24X36X1 (610X914X25)	—	—	—	—	—	—	—	0.06	0.07	0.07	0.08	0.09	0.09	0.10	0.11	0.12	0.13	0.14	0.14

Table 8 – 48VT-A Wet Coil Pressure Drop

Unit Size	Standard CFM (S.C.F.M)															
	500	600	700	800	900	1000	1100	1200	1300	1400	1500	1600	1700	1800	1900	2000
24		0.06	0.07	0.08	0.09	0.1										
30				0.12	0.15	0.19	0.23	0.27								
36						0.07	0.11	0.18	0.26	0.35						
42								0.04	0.07	0.1	0.15	0.21				
48										0.11	0.14	0.17	0.22	0.28		
60												0.1	0.17	0.23	0.31	0.36

Table 9 – Wet Coil Air Delivery (CFM) - Downflow - High Speed with 1-in. (25 mm) Filter and Economizer

UNIT SIZE	EXTERNAL STATIC PRESSURE (in. W.C.)									
	0.1	0.2	0.3	0.4	0.5	0.6	0.7	0.8	0.9	1.0
36, 42	1612	1569	1527	1481	1451	1393	1351	1317	1278	1242
48	2298	2239	2180	2110	2044	1951	1862	1777	1697	1591
60	2298	2239	2180	2110	2044	1951	1862	1777	1697	1591

Table 10 – Dry Coil Air Delivery CFM* - Horizontal and Downflow Discharge - Unit 48VT-A24-60

Unit	Heating Rise Range	Motor Speed	Wire Color		External Static Pressure (in. W.C.)								
					0.1	0.2	0.3	0.4	0.5	0.6	0.7	0.8	0.9
48VT(–,N)A24040	30 – 60ºF (17 – 33ºC)	Low	Blue	CFM	754	650	536	429	– –	– –	– –	– –	– –
				Heating Rise (ºF)	40	46	56	NA	NA	NA	NA	NA	NA
				Heating Rise (ºC)	22	26	31	NA	NA	NA	NA	NA	NA
		Med–Low	Pink	CFM	851	777	675	591	475	– –	– –	– –	– –
				Heating Rise (ºF)	36	39	45	51	NA	NA	NA	NA	NA
				Heating Rise (ºC)	20	22	25	28	NA	NA	NA	NA	NA
		Medium[2]	Red	CFM	941	851	774	684	576	479	– –	– –	– –
				Heating Rise (ºF)	32	36	39	44	52	NA	NA	NA	NA
				Heating Rise (ºC)	18	20	22	25	29	NA	NA	NA	NA
		Med–High[1]	Orange	CFM	1009	917	840	759	667	577	447	– –	– –
				Heating Rise (ºF)	30	33	36	40	45	52	NA	NA	NA
				Heating Rise (ºC)	17	18	20	22	25	29	NA	NA	NA
		High	Black	CFM	1241	1167	1111	1036	969	881	818	731	640
				Heating Rise (ºF)	NA	NA	NA	NA	31	34	37	41	47
				Heating Rise (ºC)	NA	NA	NA	NA	17	19	21	23	26
48VT(–,N)A24060	25 – 55ºF (14 – 31ºC)	Low	Blue	CFM	754	650	536	429	– –	– –	– –	– –	– –
				Heating Rise (ºF)	NA	NA	NA	NA	NA	NA	NA	NA	NA
				Heating Rise (ºC)	NA	NA	NA	NA	NA	NA	NA	NA	NA
		Med–Low	Pink	CFM	851	777	675	591	475	– –	– –	– –	– –
				Heating Rise (ºF)	52	NA	NA	NA	NA	NA	NA	NA	NA
				Heating Rise (ºC)	29	NA	NA	NA	NA	NA	NA	NA	NA
		Medium[2]	Red	CFM	941	851	774	684	576	479	– –	– –	– –
				Heating Rise (ºF)	47	52	NA	NA	NA	NA	NA	NA	NA
				Heating Rise (ºC)	26	29	NA	NA	NA	NA	NA	NA	NA
		Med–High	Orange	CFM	1009	917	840	759	667	577	447	– –	– –
				Heating Rise (ºF)	44	48	53	NA	NA	NA	NA	NA	NA
				Heating Rise (ºC)	24	27	29	NA	NA	NA	NA	NA	NA
		High[1]	Black	CFM	1241	1167	1111	1036	969	881	818	731	640
				Heating Rise (ºF)	36	38	40	43	46	50	54	NA	NA
				Heating Rise (ºC)	20	21	22	24	25	28	30	NA	NA
48VT(–,N)A30040	30 – 60ºF (17 – 33ºC)	Low	Blue	CFM	741	638	547	415	– –	– –	– –	– –	– –
				Heating Rise (ºF)	41	47	55	NA	NA	NA	NA	NA	NA
				Heating Rise (ºC)	23	26	31	NA	NA	NA	NA	NA	NA
		Med–Low[1]	Pink	CFM	973	887	823	733	665	538	451	– –	– –
				Heating Rise (ºF)	31	34	37	41	45	56	NA	NA	NA
				Heating Rise (ºC)	17	19	20	23	25	31	NA	NA	NA
		Medium	Red	CFM	1088	1023	954	881	800	723	658	563	461
				Heating Rise (ºF)	28	30	32	34	38	42	46	54	NA
				Heating Rise (ºC)	15	16	18	19	21	23	26	30	NA
		Med–High[2]	Orange	CFM	1140	1064	996	915	840	758	687	564	480
				Heating Rise (ºF)	NA	NA	30	33	36	40	44	54	NA
				Heating Rise (ºC)	NA	NA	17	18	20	22	24	30	NA
		High	Black	CFM	1202	1140	1082	1015	961	881	810	732	631
				Heating Rise (ºF)	NA	NA	NA	30	31	34	37	41	48
				Heating Rise (ºC)	NA	NA	NA	17	17	19	21	23	27

Table 10 - Dry Coil Air Delivery CFM* - Horizontal and Downflow Discharge - Unit 48VT-A24-60 (Cont)

Unit	Heating Rise Range	Motor Speed	Wire Color		External Static Pressure (in. W.C.)								
					0.1	0.2	0.3	0.4	0.5	0.6	0.7	0.8	0.9
48VT(–,N)A30060	25 – 55ºF (14 – 31ºC)	Low	Blue	CFM	741	638	547	415	– –	– –	– –	– –	– –
				Heating Rise (ºF)	NA	NA	NA	NA	NA	NA	NA	NA	NA
				Heating Rise (ºC)	NA	NA	NA	NA	NA	NA	NA	NA	NA
		Med–Low	Pink	CFM	973	887	823	733	665	538	451	– –	– –
				Heating Rise (ºF)	46	50	54	NA	NA	NA	NA	NA	NA
				Heating Rise (ºC)	25	28	30	NA	NA	NA	NA	NA	NA
		Medium	Red	CFM	1088	1023	954	881	800	723	658	563	461
				Heating Rise (ºF)	41	43	47	50	NA	NA	NA	NA	NA
				Heating Rise (ºC)	23	24	26	28	NA	NA	NA	NA	NA
		Med–High[2]	Orange	CFM	1140	1064	996	915	840	758	687	564	480
				Heating Rise (ºF)	39	42	45	49	53	NA	NA	NA	NA
				Heating Rise (ºC)	22	23	25	27	29	NA	NA	NA	NA
		High[1]	Black	CFM	1202	1140	1082	1015	961	881	810	732	631
				Heating Rise (ºF)	37	39	41	44	46	50	55	NA	NA
				Heating Rise (ºC)	21	22	23	24	26	28	30	NA	NA
48VT(–,N)A36060	25 – 55ºF (14 – 31ºC)	Low	Blue	CFM	1176	1121	1079	1019	974	920	877	826	754
				Heating Rise (ºF)	38	40	41	44	46	48	51	54	NA
				Heating Rise (ºC)	21	22	23	24	25	27	28	30	NA
		Med–Low[1]	Pink	CFM	1295	1234	1182	1126	1075	1016	955	898	857
				Heating Rise (ºF)	34	36	38	39	41	44	47	49	52
				Heating Rise (ºC)	19	20	21	22	23	24	26	27	29
		Medium[2]	Red	CFM	1345	1282	1235	1194	1140	1095	1027	974	921
				Heating Rise (ºF)	33	35	36	37	39	41	43	46	48
				Heating Rise (ºC)	18	19	20	21	22	23	24	25	27
		Med–High	Orange	CFM	1505	1452	1413	1358	1323	1282	1234	1169	1130
				Heating Rise (ºF)	30	31	31	33	34	35	36	38	39
				Heating Rise (ºC)	16	17	17	18	19	19	20	21	22
		High	Black	CFM	1705	1643	1607	1568	1518	1483	1448	1404	1360
				Heating Rise (ºF)	26	27	28	28	29	30	31	32	33
				Heating Rise (ºC)	14	15	15	16	16	17	17	18	18
48VT(–,N)A36090	35 – 65ºF (19 – 36ºC)	Low	Blue	CFM	1176	1121	1079	1019	974	920	877	826	754
				Heating Rise (ºF)	58	61	63	NA	NA	NA	NA	NA	NA
				Heating Rise (ºC)	32	34	35	NA	NA	NA	NA	NA	NA
		Med–Low	Pink	CFM	1295	1234	1182	1126	1075	1016	955	898	857
				Heating Rise (ºF)	53	55	58	60	63	NA	NA	NA	NA
				Heating Rise (ºC)	29	31	32	34	35	NA	NA	NA	NA
		Medium[2]	Red	CFM	1345	1282	1235	1194	1140	1095	1027	974	921
				Heating Rise (ºF)	51	53	55	57	60	62	NA	NA	NA
				Heating Rise (ºC)	28	29	31	32	33	35	NA	NA	NA
		Med–High[1]	Orange	CFM	1505	1452	1413	1358	1323	1282	1234	1169	1130
				Heating Rise (ºF)	45	47	48	50	51	53	55	58	60
				Heating Rise (ºC)	25	26	27	28	29	29	31	32	33
		High	Black	CFM	1705	1643	1607	1568	1518	1483	1448	1404	1360
				Heating Rise (ºF)	40	41	42	43	45	46	47	48	50
				Heating Rise (ºC)	22	23	24	24	25	25	26	27	28

Table 10 - Dry Coil Air Delivery CFM* - Horizontal and Downflow Discharge - Unit 48VT-A24-60 (Cont)

Unit	Heating Rise Range	Motor Speed	Wire Color		External Static Pressure (in. W.C.)								
					0.1	0.2	0.3	0.4	0.5	0.6	0.7	0.8	0.9
48VT(–,N)A42060	25 – 55ºF (14 – 31ºC)	Low[1]	Blue	CFM	1295	1234	1182	1126	1075	1016	955	898	857
				Heating Rise (ºF)	34	36	38	39	41	44	47	49	52
				Heating Rise (ºC)	19	20	21	22	23	24	26	27	29
		Med–Low	Pink	CFM	1345	1282	1235	1194	1140	1095	1027	974	921
				Heating Rise (ºF)	33	35	36	37	39	41	43	46	48
				Heating Rise (ºC)	18	19	20	21	22	23	24	25	27
		Medium	Red	CFM	1505	1452	1413	1358	1323	1282	1234	1169	1130
				Heating Rise (ºF)	30	31	31	33	34	35	36	38	39
				Heating Rise (ºC)	16	17	17	18	19	19	20	21	22
		Med–High[2]	Orange	CFM	1545	1492	1449	1411	1362	1313	1278	1231	1188
				Heating Rise (ºF)	29	30	31	31	33	34	35	36	37
				Heating Rise (ºC)	16	17	17	17	18	19	19	20	21
		High	Black	CFM	1705	1643	1607	1568	1518	1483	1448	1404	1360
				Heating Rise (ºF)	26	27	28	28	29	30	31	32	33
				Heating Rise (ºC)	14	15	15	16	16	17	17	18	18
48VT(–,N)A42090	35 – 65ºF (19 – 36ºC)	Low	Blue	CFM	1295	1234	1182	1126	1075	1016	955	898	857
				Heating Rise (ºF)	53	55	58	60	63	NA	NA	NA	NA
				Heating Rise (ºC)	29	31	32	34	35	NA	NA	NA	NA
		Med–Low	Pink	CFM	1345	1282	1235	1194	1140	1095	1027	974	921
				Heating Rise (ºF)	51	53	55	57	60	62	NA	NA	NA
				Heating Rise (ºC)	28	29	31	32	33	35	NA	NA	NA
		Medium[1]	Red	CFM	1505	1452	1413	1358	1323	1282	1234	1169	1130
				Heating Rise (ºF)	45	47	48	50	51	53	55	58	60
				Heating Rise (ºC)	25	26	27	28	29	29	31	32	33
		Med–High[2]	Orange	CFM	1545	1492	1449	1411	1362	1313	1278	1231	1188
				Heating Rise (ºF)	44	46	47	48	50	52	53	55	57
				Heating Rise (ºC)	24	25	26	27	28	29	30	31	32
		High	Black	CFM	1705	1643	1607	1568	1518	1483	1448	1404	1360
				Heating Rise (ºF)	40	41	42	43	45	46	47	48	50
				Heating Rise (ºC)	22	23	24	24	25	25	26	27	28
48VT(–,N)A48090	35 – 65ºF (19 – 36ºC)	Low	Blue	CFM	1430	1374	1327	1267	1223	1176	1127	1061	1016
				Heating Rise (ºF)	48	49	51	54	56	58	60	64	NA
				Heating Rise (ºC)	26	27	28	30	31	32	34	36	NA
		Med–Low[1]	Pink	CFM	1445	1389	1341	1281	1236	1189	1139	1072	1027
				Heating Rise (ºF)	47	49	51	53	55	57	60	63	NA
				Heating Rise (ºC)	26	27	28	29	31	32	33	35	NA
		Medium[2]	Red	CFM	1678	1635	1602	1558	1513	1474	1438	1404	1349
				Heating Rise (ºF)	41	42	42	44	45	46	47	48	50
				Heating Rise (ºC)	23	23	24	24	25	26	26	27	28
		Med–High	Orange	CFM	2131	2088	2065	2013	1982	1941	1888	1860	1785
				Heating Rise (ºF)	NA	NA	NA	NA	NA	35	36	37	38
				Heating Rise (ºC)	NA	NA	NA	NA	NA	19	20	20	21
		High	Black	CFM	2461	2409	2339	2286	2192	2140	2062	1968	1874
				Heating Rise (ºF)	NA	NA	NA	NA	NA	NA	NA	35	36
				Heating Rise (ºC)	NA	NA	NA	NA	NA	NA	NA	19	20

Table 10 - Dry Coil Air Delivery CFM* - Horizontal and Downflow Discharge - Unit 48VT-A24-60 (Cont)

Unit	Heating Rise Range	Motor Speed	Wire Color		External Static Pressure (in. W.C.)								
					0.1	0.2	0.3	0.4	0.5	0.6	0.7	0.8	0.9
48VT(–,N)A48115	30 – 60ºF (17 – 33ºC)	Low	Blue	CFM	1430	1374	1327	1267	1223	1176	1127	1061	1016
				Heating Rise (ºF)	61	NA	NA	NA	NA	NA	NA	NA	NA
				Heating Rise (ºC)	34	NA	NA	NA	NA	NA	NA	NA	NA
		Med–Low	Pink	CFM	1445	1389	1341	1281	1236	1189	1139	1072	1027
				Heating Rise (ºF)	60	NA	NA	NA	NA	NA	NA	NA	NA
				Heating Rise (ºC)	33	NA	NA	NA	NA	NA	NA	NA	NA
		Medium[2]	Red	CFM	1678	1635	1602	1558	1513	1474	1438	1404	1349
				Heating Rise (ºF)	52	53	54	56	57	59	60	NA	NA
				Heating Rise (ºC)	29	30	30	31	32	33	34	NA	NA
		Med–High[1]	Orange	CFM	2131	2088	2065	2013	1982	1941	1888	1860	1785
				Heating Rise (ºF)	41	42	42	43	44	45	46	47	49
				Heating Rise (ºC)	23	23	23	24	24	25	26	26	27
		High	Black	CFM	2461	2409	2339	2286	2192	2140	2062	1968	1874
				Heating Rise (ºF)	35	36	37	38	40	41	42	44	46
				Heating Rise (ºC)	20	20	21	21	22	23	23	25	26
48VT(–,N)A48130	35 – 65ºF (19 – 36ºC)	Low	Blue	CFM	1430	1374	1327	1267	1223	1176	1127	1061	1016
				Heating Rise (ºF)	NA	NA	NA	NA	NA	NA	NA	NA	NA
				Heating Rise (ºC)	NA	NA	NA	NA	NA	NA	NA	NA	NA
		Med–Low	Pink	CFM	1445	1389	1341	1281	1236	1189	1139	1072	1027
				Heating Rise (ºF)	NA	NA	NA	NA	NA	NA	NA	NA	NA
				Heating Rise (ºC)	NA	NA	NA	NA	NA	NA	NA	NA	NA
		Medium[2]	Red	CFM	1678	1635	1602	1558	1513	1474	1438	1404	1349
				Heating Rise (ºF)	57	59	60	62	64	65	NA	NA	NA
				Heating Rise (ºC)	32	33	33	34	35	36	NA	NA	NA
		Med–High[1]	Orange	CFM	2131	2088	2065	2013	1982	1941	1888	1860	1785
				Heating Rise (ºF)	45	46	47	48	49	50	51	52	54
				Heating Rise (ºC)	25	26	26	27	27	28	28	29	30
		High	Black	CFM	2461	2409	2339	2286	2192	2140	2062	1968	1874
				Heating Rise (ºF)	39	40	41	42	44	45	47	49	51
				Heating Rise (ºC)	22	22	23	23	24	25	26	27	29
48VT(–,N)A60090	35 – 65ºF (19 – 36ºC)	Low[1]	Blue	CFM	1445	1389	1341	1281	1236	1189	1139	1072	1027
				Heating Rise (ºF)	47	49	51	53	55	57	60	63	NA
				Heating Rise (ºC)	26	27	28	29	31	32	33	35	NA
		Med–Low	Pink	CFM	1678	1635	1602	1558	1513	1474	1438	1404	1349
				Heating Rise (ºF)	41	42	42	44	45	46	47	48	50
				Heating Rise (ºC)	23	23	24	24	25	26	26	27	28
		Medium[2]	Red	CFM	1962	1915	1880	1843	1794	1753	1711	1675	1628
				Heating Rise (ºF)	35	36	36	37	38	39	40	41	42
				Heating Rise (ºC)	19	20	20	20	21	22	22	23	23
		Med–High	Orange	CFM	2131	2088	2065	2013	1982	1941	1888	1860	1785
				Heating Rise (ºF)	NA	NA	NA	NA	NA	35	36	37	38
				Heating Rise (ºC)	NA	NA	NA	NA	NA	19	20	20	21
		High	Black	CFM	2461	2409	2339	2286	2192	2140	2062	1968	1874
				Heating Rise (ºF)	NA	NA	NA	NA	NA	NA	NA	35	36
				Heating Rise (ºC)	NA	NA	NA	NA	NA	NA	NA	19	20

Table 10 - Dry Coil Air Delivery CFM* - Horizontal and Downflow Discharge - Unit 48VT-A24-60 (Cont)

Unit	Heating Rise Range	Motor Speed	Wire Color		External Static Pressure (in. W.C.)								
					0.1	0.2	0.3	0.4	0.5	0.6	0.7	0.8	0.9
48VT(–,N)A60115	30 – 60ºF (17 – 33ºC)	Low	Blue	CFM	1445	1389	1341	1281	1236	1189	1139	1072	1027
				Heating Rise (ºF)	60	NA	NA	NA	NA	NA	NA	NA	NA
				Heating Rise (ºC)	33	NA	NA	NA	NA	NA	NA	NA	NA
		Med–Low	Pink	CFM	1678	1635	1602	1558	1513	1474	1438	1404	1349
				Heating Rise (ºF)	52	53	54	56	57	59	60	NA	NA
				Heating Rise (ºC)	29	30	30	31	32	33	34	NA	NA
		Medium[2]	Red	CFM	1962	1915	1880	1843	1794	1753	1711	1675	1628
				Heating Rise (ºF)	44	45	46	47	48	50	51	52	53
				Heating Rise (ºC)	25	25	26	26	27	28	28	29	30
		Med–High[1]	Orange	CFM	2131	2088	2065	2013	1982	1941	1888	1860	1785
				Heating Rise (ºF)	41	42	42	43	44	45	46	47	49
				Heating Rise (ºC)	23	23	23	24	24	25	26	26	27
		High	Black	CFM	2461	2409	2339	2286	2192	2140	2062	1968	1874
				Heating Rise (ºF)	35	36	37	38	40	41	42	44	46
				Heating Rise (ºC)	20	20	21	21	22	23	23	25	26
48VT(–,N)A60130	35 – 65ºF (19 – 36ºC)	Low	Blue	CFM	1445	1389	1341	1281	1236	1189	1139	1072	1027
				Heating Rise (ºF)	NA	NA	NA	NA	NA	NA	NA	NA	NA
				Heating Rise (ºC)	NA	NA	NA	NA	NA	NA	NA	NA	NA
		Med–Low	Pink	CFM	1678	1635	1602	1558	1513	1474	1438	1404	1349
				Heating Rise (ºF)	57	59	60	62	64	65	NA	NA	NA
				Heating Rise (ºC)	32	33	33	34	35	36	NA	NA	NA
		Medium[2]	Red	CFM	1962	1915	1880	1843	1794	1753	1711	1675	1628
				Heating Rise (ºF)	49	50	51	52	54	55	56	57	59
				Heating Rise (ºC)	27	28	28	29	30	31	31	32	33
		Med–High[1]	Orange	CFM	2131	2088	2065	2013	1982	1941	1888	1860	1785
				Heating Rise (ºF)	45	46	47	48	49	50	51	52	54
				Heating Rise (ºC)	25	26	26	27	27	28	28	29	30
		High	Black	CFM	2461	2409	2339	2286	2192	2140	2062	1968	1874
				Heating Rise (ºF)	39	40	41	42	44	45	47	49	51
				Heating Rise (ºC)	22	22	23	23	24	25	26	27	29

* Air delivery values are without air filter and are for dry coil (See 48VT–A Wet Coil Pressure Drop table).

[1] Factory–shipped gas heating speed

[2] Factory–shipped heat pump speed

NA – Not allowed for gas heating speed

Note: Deduct field–supplied air filter pressure drop and wet coil pressure drop to obtain external static pressure available for ducting.

Shaded areas indicate speed/static combinations that are not permitted for dehumidification speed.

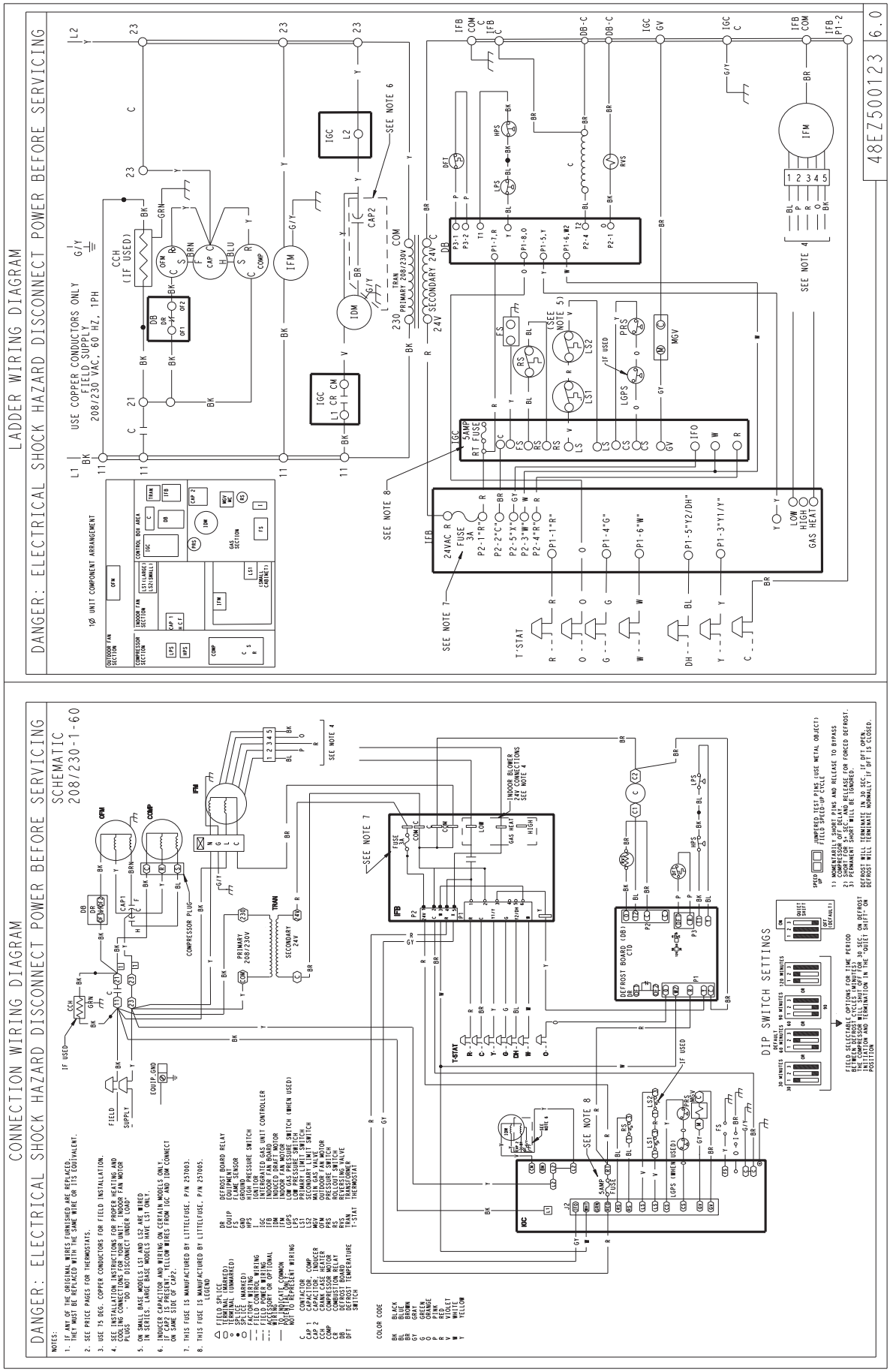

A09283

Fig. 15 - 208/230-1-60 Wiring Diagram, Unit 48VT-A

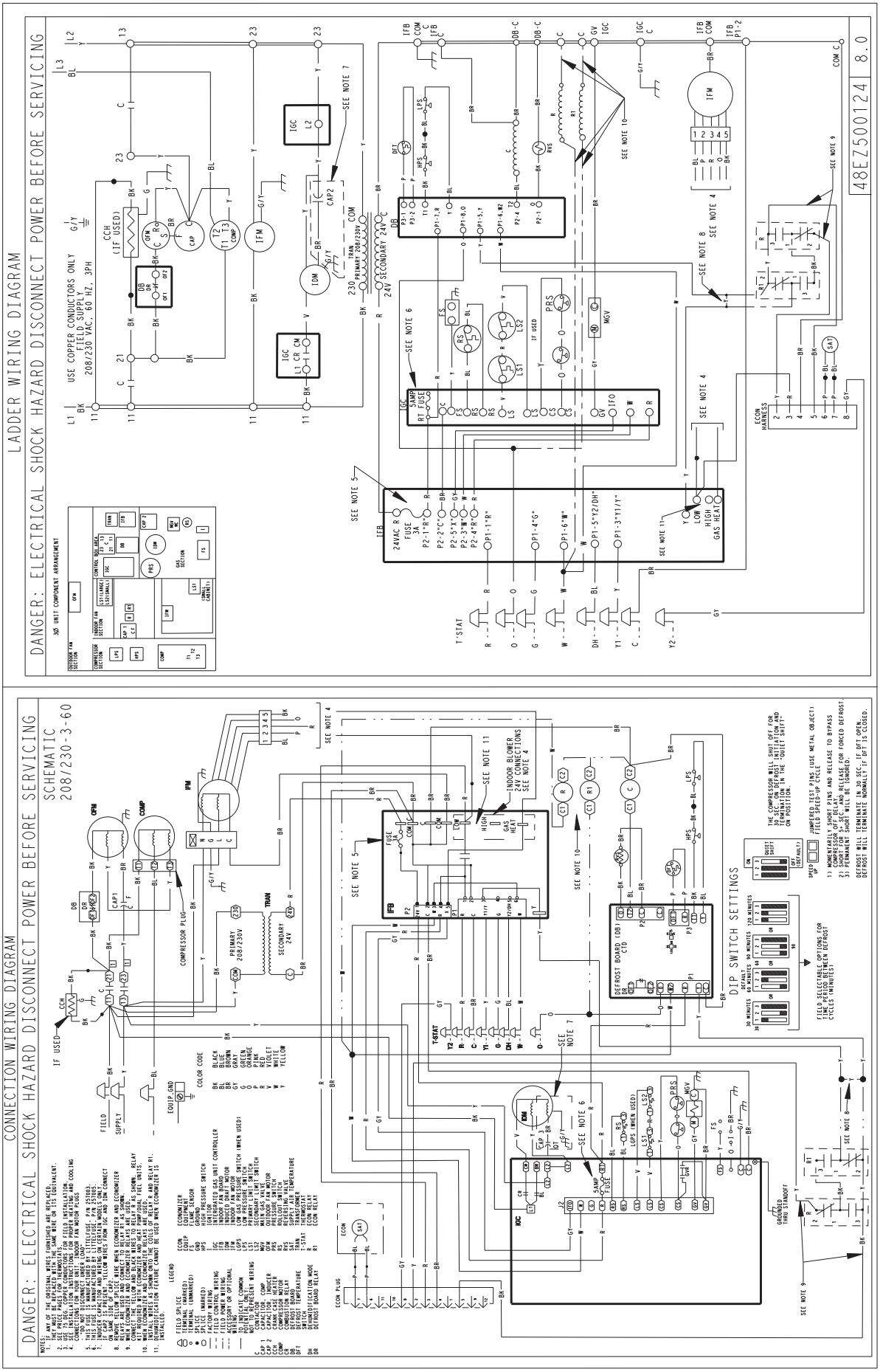

A09284

Fig. 16 - 208/230-3-60 Wiring Diagram, Unit 48VT-A

Required Subcooling °F(°C)					
Model Size	Outdoor Ambient Temperature °F(°C)				
	75 (24)	85 (29)	95 (35)	105 (41)	115 (46)
24	15 (8.3)	15 (8.3)	14 (7.8)	14 (7.8)	14 (7.6)
30	16 (8.9)	16 (9)	16 (8.9)	16 (8.8)	16 (8.8)
36	16 (9.1)	16 (8.9)	15 (8.5)	15 (8.2)	14 (7.9)
42	16 (9.1)	16 (9)	16 (8.8)	15 (8.4)	14 (8)
48	20 (11.3)	20 (11.1)	19 (10.6)	19 (10.3)	18 (9.9)
60	15 (8.1)	14 (7.7)	14 (7.6)	13 (7.2)	12 (6.9)

Charging Procedure

1- Measure Discharge line pressure by attaching a gauge to the service port.

2- Measure the Liquid line temperature by attaching a temperature sensing device to it.

3- Insulate the temperature sensing device so that the Outdoor Ambient doesn't affect the reading.

4- Refer to the required Subcooling in the table based on the model size and the Outdoor Ambient temperature.

5- Interpolate if the Outdoor ambient temperature lies in between the table values.

6- Find the Pressure Value in the table corresponding to the the measured Pressure of the Compressor Discharge line.

7- Read across from the Pressure reading to obtain the Liquid line temperature for a required Subcooling

8- Add Charge if the measured temperature is higher than the table value.

9 - Remove charge if the measured temperature is lower than the table value.

50VT500199 REV 2.0

Required Liquid Line Temperature for a Specific Subcooling (R-410A)											
Pressure (psig)	Required Subcooling (°F)					Pressure (kPa)	Required Subcooling (°C)				
	5	10	15	20	25		3	6	8	11	14
189	61	56	51	46	41	1303	16	13	11	8	5
196	63	58	53	48	43	1351	17	15	12	9	6
203	66	61	56	51	46	1399	19	16	13	10	8
210	68	63	58	53	48	1448	20	17	14	11	9
217	70	65	60	55	50	1496	21	18	15	13	10
224	72	67	62	57	52	1544	22	19	16	14	11
231	74	69	64	59	54	1593	23	20	18	15	12
238	76	71	66	61	56	1641	24	21	19	16	13
245	77	72	67	62	57	1689	25	22	20	17	14
252	79	74	69	64	59	1737	26	23	21	18	15
260	81	76	71	66	61	1792	27	25	22	19	16
268	83	78	73	68	63	1848	29	26	23	20	17
276	85	80	75	70	65	1903	30	27	24	21	19
284	87	82	77	72	67	1958	31	28	25	22	20
292	89	84	79	74	69	2013	32	29	26	23	21
300	91	86	81	76	71	2068	33	30	27	24	22
309	93	88	83	78	73	2130	34	31	28	26	23
318	95	90	85	80	75	2192	35	32	29	27	24
327	97	92	87	82	77	2254	36	33	31	28	25
336	99	94	89	84	79	2316	37	34	32	29	26
345	101	96	91	86	81	2378	38	35	33	30	27
354	103	98	93	88	83	2440	39	36	34	31	28
364	105	100	95	90	85	2509	40	38	35	32	29
374	107	102	97	92	87	2578	41	39	36	33	30
384	108	103	98	93	88	2647	42	40	37	34	31
394	110	105	100	95	90	2716	44	41	38	35	32
404	112	107	102	97	92	2785	45	42	39	36	33
414	114	109	104	99	94	2854	46	43	40	37	34
424	116	111	106	101	96	2923	47	44	41	38	35
434	118	113	108	103	98	2992	48	45	42	39	36
444	119	114	109	104	99	3061	48	46	43	40	37
454	121	116	111	106	101	3130	49	47	44	41	38
464	123	118	113	108	103	3199	50	48	45	42	39
474	124	119	114	109	104	3268	51	48	46	43	40
484	126	121	116	111	106	3337	52	49	47	44	41
494	127	122	117	112	107	3406	53	50	47	45	42
504	129	124	119	114	109	3475	54	51	48	46	43
514	131	126	121	116	111	3544	55	52	49	46	44
524	132	127	122	117	112	3612	56	53	50	47	45
534	134	129	124	119	114	3681	56	54	51	48	45

Fig. 17 - Cooling Charging Table-Subcooling

A09412

MAINTENANCE

To ensure continuing high performance and to minimize the possibility of premature equipment failure, periodic maintenance must be performed on this equipment. This combination heating/cooling unit should be inspected at least once each year by a qualified service person. To troubleshoot cooling or heating of units, refer to Tables 10, 11 and 12.

NOTE: Consult your local dealer about the availability of a maintenance contract.

⚠ WARNING

PERSONAL INJURY AND UNIT DAMAGE HAZARD

Failure to follow this warning could result in personal injury or death and unit component damage.

The ability to properly perform maintenance on this equipment requires certain expertise, mechanical skills, tools and equipment. If you do not possess these, do not attempt to perform any maintenance on this equipment, other than those procedures recommended in the Owner's Manual.

⚠ WARNING

ELECTRICAL SHOCK HAZARD

Failure to follow these warnings could result in personal injury or death:

1. Turn off electrical power to the unit and install a lockout tag before performing any maintenance or service on this unit.
2. Use extreme caution when removing panels and parts.
3. Never place anything combustible either on or in contact with the unit.
4. Should overheating occur or the gas supply fail to shut off, turn off external main manual gas valve to the unit. Then shut off electrical supply.

⚠ CAUTION

UNIT OPERATION HAZARD

Failure to follow this caution may result in improper operation.

Errors made when reconnecting wires may cause improper and dangerous operation. Label all wires prior to disconnecting when servicing.

The minimum maintenance requirements for this equipment are as follows:

1. Inspect air filter(s) each month. Clean or replace when necessary. Certain geographical locations may require more frequent inspections.
2. Inspect indoor coil, outdoor coil, drain pan, and condensate drain each cooling season for cleanliness. Clean when necessary.
3. Inspect blower motor and wheel for cleanliness at the beginning of each heating and cooling season. Clean when necessary. For first heating and cooling season, inspect blower wheel bi-monthly to determine proper cleaning frequency.
4. Check electrical connections for tightness and controls for proper operation each heating and cooling season. Service when necessary. Ensure electrical wiring is not in contact with refrigerant tubing or sharp metal edges.
5. Check and inspect heating section before each heating season. Clean and adjust when necessary.
6. Check flue hood and remove any obstructions, if necessary.

Air Filter

IMPORTANT: Never operate the unit without a suitable air filter in the return-air duct system. Always replace the filter with the same dimensional size and type as originally installed. (See Table 1 for recommended filter sizes.)

Inspect air filter(s) at least once each month and replace (throwaway-type) or clean (cleanable-type) at least twice during each heating and cooling season or whenever the filter(s) becomes clogged with dust and/or lint.

Indoor Blower and Motor

NOTE: All motors are prelubricated. Do not attempt to lubricate these motors.

For longer life, operating economy, and continuing efficiency, clean accumulated dirt and grease from the blower wheel and motor annually.

⚠ WARNING

ELECTRICAL SHOCK HAZARD

Failure to follow this warning could result in personal injury or death.

Disconnect and tag electrical power to the unit before cleaning the blower motor and wheel.

Cleaning the Blower Motor and Wheel

1. Remove and disassemble blower assembly as follows:
   a. Remove blower access panel (see Fig. 19).
   b. Disconnect 5 pin plug and 4 pin plug from indoor blower motor. Remove capacitor if required.
   c. On all units, remove blower assembly from unit. Remove screws securing blower to blower partition and slide assembly out. Be careful not to tear insulation in blower compartment.
   d. Ensure proper reassembly by marking blower wheel and motor in relation to blower housing before disassembly.
   e. Loosen setscrew(s) that secures wheel to motor shaft. Remove screws that secure motor mount brackets to housing, and slide motor and motor mount out of housing.
2. Remove and clean blower wheel as follows:
   a. Ensure proper reassembly by marking wheel orientation.
   b. Lift wheel from housing. When handling and/or cleaning blower wheel, be sure not to disturb balance weights (clips) on blower wheel vanes.
   c. Remove caked-on dirt from wheel and housing with a brush. Remove lint and/or dirt accumulations from wheel and housing with vacuum cleaner, using soft brush attachment. Remove grease and oil with mild solvent.
   d. Reassemble wheel into housing.
   e. Reassemble motor into housing. Be sure setscrews are tightened on motor shaft flats and not on round part of shaft. Reinstall blower into unit. Reinstall capacitor.
   f. Connect 5 pin plug and 4 pin plug to indoor blower motor.
   g. Reinstall blower access panel (see Fig. 19).
3. Restore electrical power to unit. Start unit and check for proper blower rotation and motor speeds during heating and cooling cycles.

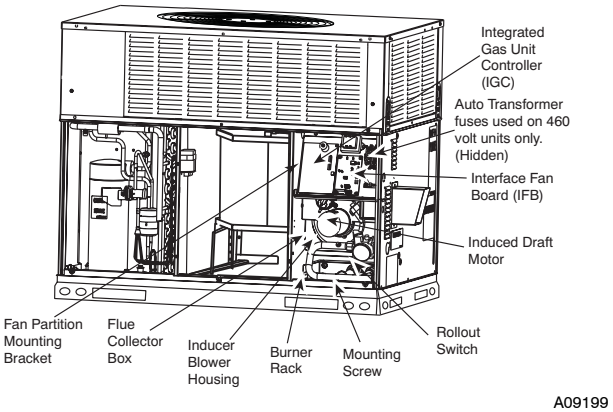

Fig. 18 - Blower Housing and Flue Collector Box

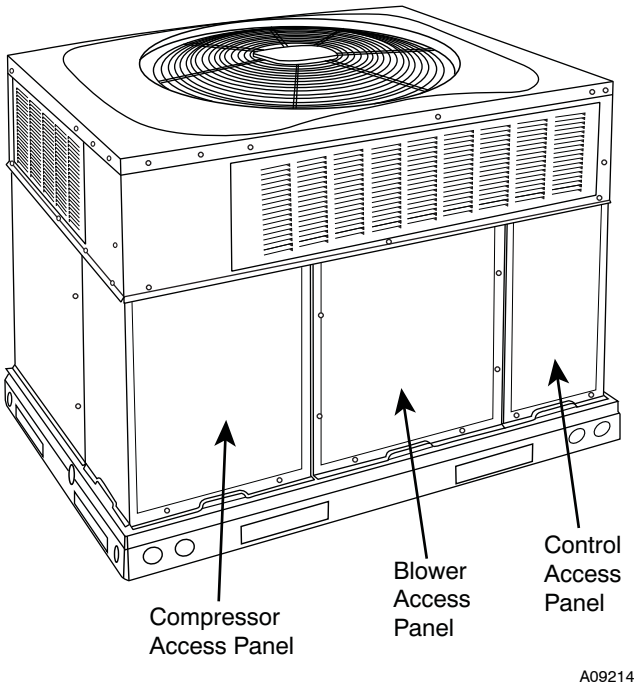

Fig. 19 - Unit Access Panels

Induced Draft (combustion air) Blower Assembly

The induced-draft blower assembly consists of the inducer motor, the blower housing, and the induced-draft blower wheel.

Clean periodically to assure proper airflow and heating efficiency. Inspect blower wheel every fall and periodically during the heating season. For the first heating season, inspect blower wheel bimonthly to determine proper cleaning frequency.

To inspect blower wheel, remove draft hood assembly. Shine a flashlight into opening to inspect wheel. If cleaning is required, remove induced-draft blower assembly as follows:

1. Remove control access panel (See Fig. 19).
2. Remove the 5 screws that attach induced-draft blower assembly to the flue collector box cover.
3. Slide the assembly out of the unit. (See Fig. 20). Clean the blower wheel. If additional cleaning is required, continue with Steps 4 and 5.
4. To remove blower wheel, remove 2 setscrews.
5. To remove inducer motor, remove screws that hold the inducer motor to the blower housing.
6. To reinstall, reverse the procedure outlined above.

Flue Gas Passageways

To inspect the flue collector box and upper areas of the heat exchanger:

1. Remove the induced draft blower assembly according to directions in the Induced Draft Blower Assembly section.
2. Remove the 11 screws holding the flue collector box cover (See Fig. 18) to the heat exchanger assembly. Inspect the heat exchangers.
3. Clean all surfaces, as required, using a wire brush.

Limit Switch

Remove blower access panel (see Fig. 19). Limit switch is located on the fan partition.

Burner Ignition

Unit is equipped with a direct spark ignition 100 percent lockout system. Ignition module (IGC) is located in the control box (See Fig. 18). Module contains a self-diagnostic LED. During servicing, refer to label diagram or Table 5 in these instructions for LED interpretation.

If lockout occurs, unit may be reset by either momentarily interrupting power supply to unit or by turning selector switch to OFF position at the thermostat.

Main Burners

At the beginning of each heating season, inspect for deterioration or blockage due to corrosion or other causes. Observe the main burner flames and adjust, if necessary.

Removal of Gas Train

To remove the gas train for servicing:

1. Shut off main gas valve.
2. Shut off power to unit and install lockout tag.
3. Remove control access panel (See Fig. 19).
4. Disconnect gas piping at unit gas valve.
5. Remove fan partition mounting bracket (2 screws located on the left side of control compartment on the fan partition panel). Slide bracket forward, bottom first to remove. (See Fig. 18).
6. Remove wires connected to gas valve. Mark each wire.
7. Remove ignitor and sensor wires at the ignitor module.
8. Remove the mounting screw that attaches the burner rack to the unit base (See Fig. 18).
9. Slide the burner rack out of the unit (See Fig. 18 and 21).
10. To reinstall, reverse the procedure outlined above.

Outdoor Coil, Indoor Coil, and Condensate Drain Pan

Inspect the outdoor coil, indoor coil, and condensate drain pan at least once each year. The coils are easily cleaned when dry; therefore, inspect and clean the coils either before or after each cooling season. Remove all obstructions, including weeds and shrubs, that interfere with the airflow through the condenser coil.

Straighten bent fins with a fin comb. If coated with dirt or lint, clean the coils with a vacuum cleaner, using the soft brush attachment. Be careful not to bend the fins. If coated with oil or grease, clean the coils with a mild detergent-and-water solution. Rinse coils with clear water, using a garden hose. Be careful not to splash water on motors, insulation, wiring, or air filter(s). For best results, spray outdoor coil fins from inside to outside the unit. On units with an outer and inner condenser coil, be sure to clean between the coils. Be sure to flush all dirt and debris from the unit base.

Inspect the drain pan and condensate drain line when inspecting the coils. Clean the drain pan and condensate drain by removing all foreign matter from the pan. Flush the pan and drain tube with clear water. Do not splash water on the insulation, motor, wiring, or

air filter(s). If the drain tube is restricted, clear it with a “plumbers snake” or similar probe device. Ensure that the auxiliary drain port above the drain tube is also clear.

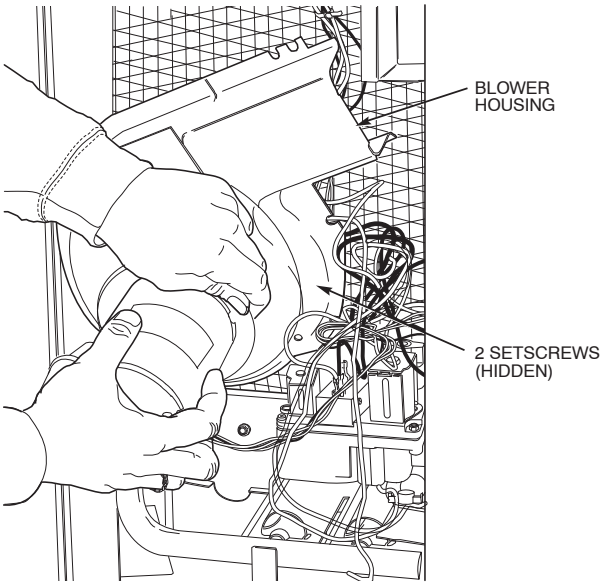

Fig. 20 - Removal of Motor and Blower Wheel

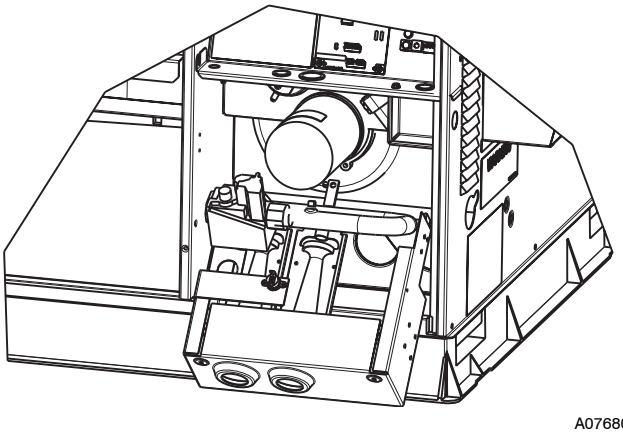

Fig. 21 - Burner Rack Removed

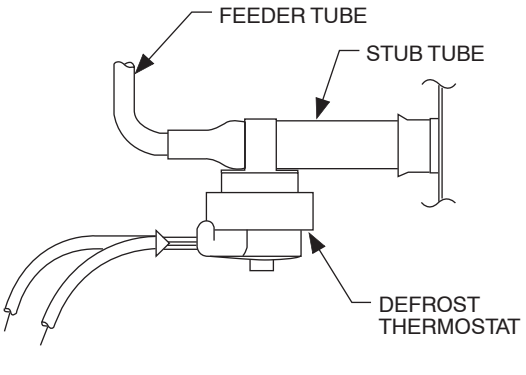

Fig. 22 - Defrost Thermostat Location

Outdoor Fan

⚠ CAUTION

UNIT OPERATION HAZARD

Failure to follow this caution may result in damage to unit components.

Keep the outdoor fan free from all obstructions to ensure proper cooling operation. Never place articles on top of the unit.

1. Remove 6 screws holding outdoor grille and motor to top cover.
2. Turn motor/grille assembly upside down on top cover to expose the fan blade.
3. Inspect the fan blades for cracks or bends.
4. If fan needs to be removed, loosen the setscrew and slide the fan off the motor shaft.
5. When replacing fan blade, position blade back to the same position as before.
6. Ensure that setscrew engages the flat area on the motor shaft when tightening.
7. Replace grille.

Electrical Controls and Wiring

Inspect and check the electrical controls and wiring annually. Be sure to turn off the gas supply, and then the electrical power to the unit.

Remove access panels (see Fig. 19) to locate all the electrical controls and wiring. Check all electrical connections for tightness. Tighten all screw connections. If any discolored or burned connections are noticed, disassemble the connection, clean all the parts, re-strip the wire end and reassemble the connection properly and securely.

After inspecting the electrical controls and wiring, replace the access panels (see Fig. 19). Start the unit, and observe at least one complete heating cycle and one complete cooling cycle to ensure proper operation. If discrepancies are observed in any operating cycle, or if a suspected malfunction has occurred, check each electrical component with the proper electrical instrumentation. Refer to the unit wiring label when making these checkouts.

NOTE: Refer to the heating and/or cooling sequence of operation in this publication as an aid in determining proper control operation.

Refrigerant Circuit

Annually inspect all refrigerant tubing connections and the unit base for oil accumulations. Detecting oil generally indicates a refrigerant leak.

⚠ WARNING

EXPLOSION, PERSONAL INJURY AND ENVIRONMENTAL HAZARD

Failure to follow this warning could result in personal injury, death or property damage.

System under pressure. Relieve pressure and recover all refrigerant before system repair or final unit disposal. Use all service ports and open all flow-control devices, including solenoid valves.

If oil is detected or if low cooling performance is suspected, leak-test all refrigerant tubing using an electronic leak-detector, halide torch, or liquid-soap solution. If a refrigerant leak is detected, refer to the Check for Refrigerant Leaks section.

If no refrigerant leaks are found and low cooling performance is suspected, refer to the Checking and Adjusting Refrigerant Charge section.

Gas Input

The gas input does not require checking unless improper heating performance is suspected. If a problem exists, refer to the Start-Up section.

Indoor Airflow

The heating and/or cooling airflow does not require checking unless improper performance is suspected. If a problem exists, be sure that all supply- and return-air grilles are open and free from obstructions, and that the air filter is clean. When necessary, refer to the Indoor Airflow and Airflow Adjustments section to check the system airflow.

Check Defrost Thermostat

The defrost thermostat is usually located on the lowest liquid leaving circuit of the left condenser coil (see Fig. 22). The thermostat closes at 32°F (0°C) and opens at 65°F (18°C).

Puron Items

Metering Device (Thermostatic Expansion Valve & Piston)

This unit uses both a hard shutoff, balance port TXV in the indoor coil and a piston in each side of the outdoor coil. The TXV maintains a constant superheat at the evaporator coil exit (cooling mode) resulting in higher overall system efficiency.

Pressure Switches

Pressure switches are protective devices wired into control circuit (low voltage). They shut off compressor if abnormally high or low pressures are present in the refrigeration circuit. These pressure switches are specifically designed to operate with Puron (R-410A) systems. R-22 pressure switches must not be used as replacements for the Puron (R-410A) system.

Loss of Charge Switch

This switch is located on the liquid line and protects against low suction pressures caused by such events as loss of charge, low airflow across indoor coil, dirty filters, etc. It opens on a pressure drop at about 20 psig. If system pressure is above this, switch should be closed. To check switch:

1. Turn off all power to unit.
2. Disconnect leads on switch.
3. Apply ohm meter leads across switch. You should have continuity on a good switch.

NOTE: Because these switches are attached to refrigeration system under pressure, it is not advisable to remove this device for troubleshooting unless you are reasonably certain that a problem exists. If switch must be removed, remove and recover all system charge so that pressure gauges read 0 psi. Never open system without breaking vacuum with dry nitrogen.

High-Pressure Switch

The high-pressure switch is located in the discharge line and protects against excessive condenser coil pressure. It opens at 650 psig.

High pressure may be caused by a dirty outdoor coil, failed fan motor, or outdoor air recirculation. To check switch:

1. Turn off all power to unit.
2. Disconnect leads on switch.
3. Apply ohm meter leads across switch. You should have continuity on a good switch.

Copeland Scroll Compressor (Puron Refrigerant)

The compressor used in this product is specifically designed to operate with Puron (R-410A) refrigerant and cannot be interchanged.

The compressor is an electrical (as well as mechanical) device. Exercise extreme caution when working near compressors. Power should be shut off, if possible, for most troubleshooting techniques. Refrigerants present additional safety hazards.

⚠ WARNING

EXPLOSION HAZARD

Failure to follow this warning could result in personal injury or death and/or property damage.

Wear safety glasses and gloves when handling refrigerants. Keep torches and other ignition sources away from refrigerants and oils.

The scroll compressor pumps refrigerant throughout the system by the interaction of a stationary and an orbiting scroll. The scroll compressor has no dynamic suction or discharge valves, and it is more tolerant of stresses caused by debris, liquid slugging, and flooded starts. The compressor is equipped with an internal pressure relief port. The pressure relief port is a safety device, designed to protect against extreme high pressure. The relief port has an operating range between 550 and 625 psi differential pressure.

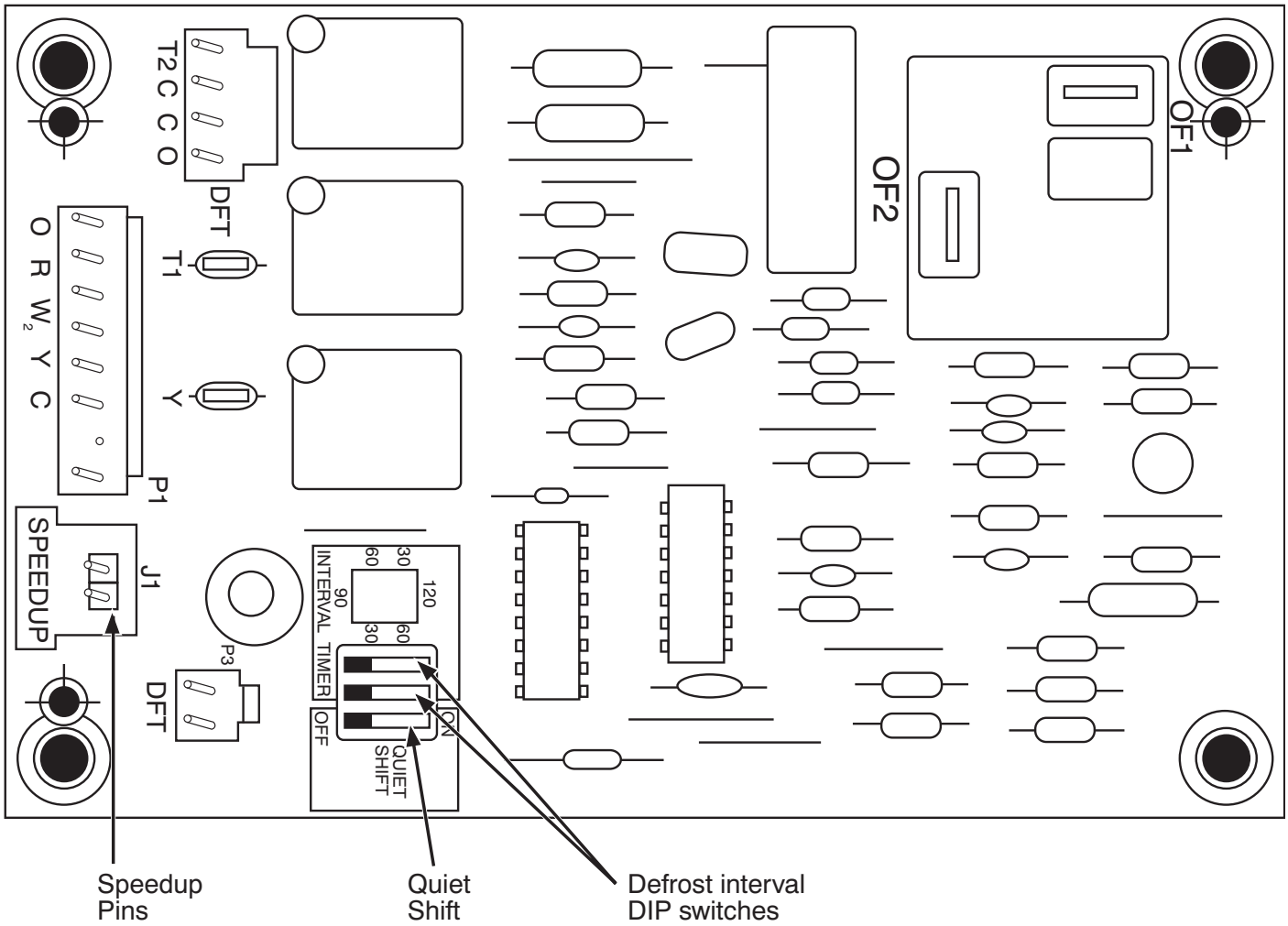

A08020

Fig. 23 - Defrost Control

C99097

Fig. 24 - Refrigerant Circuit

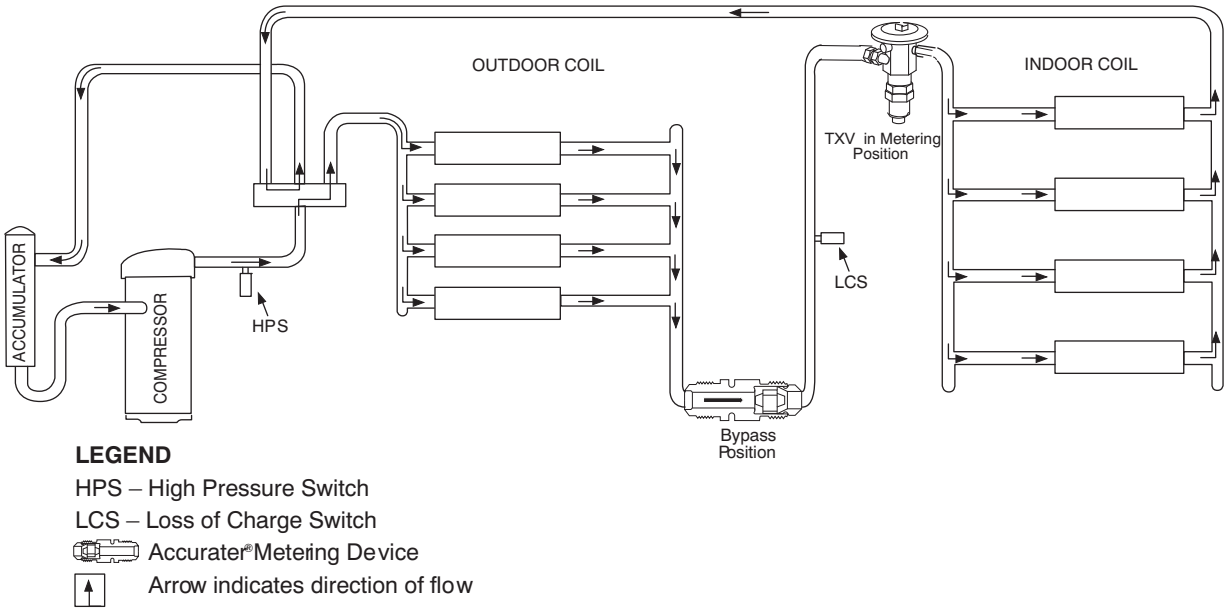

C03011

Fig. 25 - Typical Heat Pump Operation, Cooling Mode

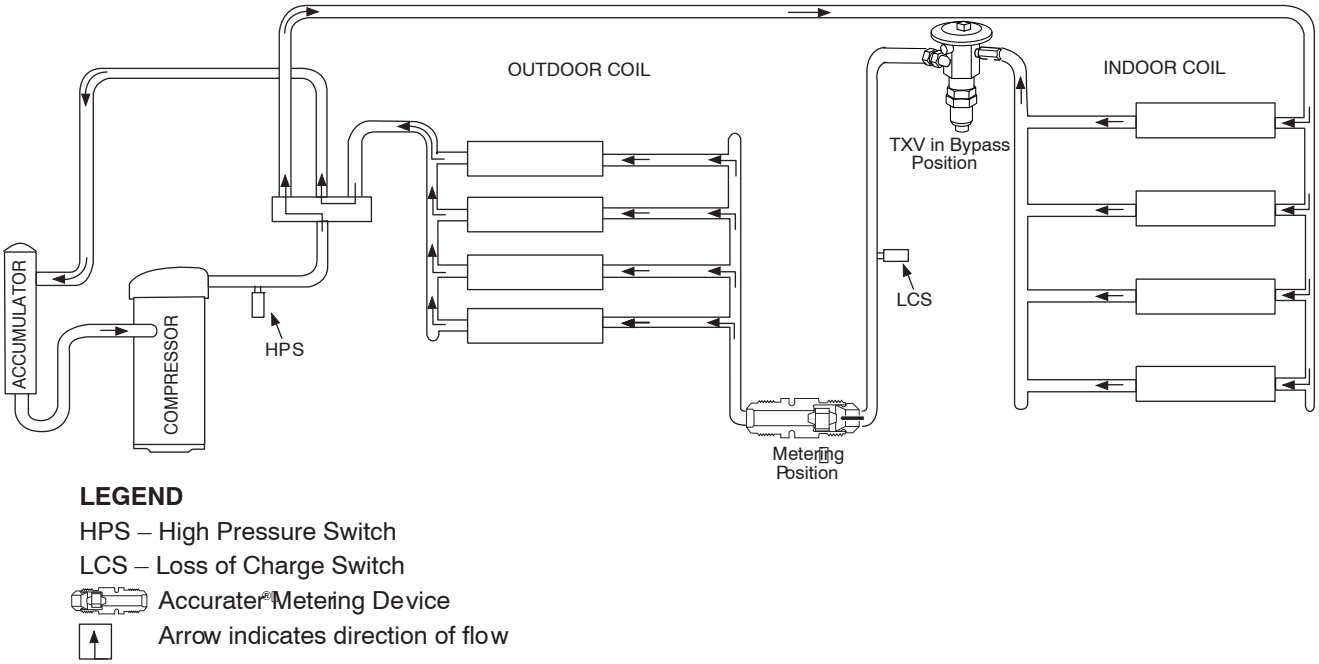

Fig. 26 - Typical Heat Pump Operation, Heating Mode

⚠ WARNING

UNIT OPERATION AND SAFETY HAZARD

Failure to follow this warning could result in personal injury or equipment damage.

This system uses Puron (R-410A) refrigerant which has higher operating pressures than R-22 and other refrigerants. No other refrigerant may be used in this system. Gauge set, hoses, and recovery system must be designed to handle Puron. If you are unsure, consult the equipment manufacturer.

Refrigerant System

This information covers the refrigerant system of the 48VT-A including the compressor oil needed, servicing systems on roofs containing synthetic materials, the filter drier and refrigerant charging.

Compressor Oil

If additional oil is needed use Uniqema RL32-3MAF. If this oil is not available, use Copeland Ultra 32CC or Mobil Artic EAL22CC. This oil is extremely hygroscopic, meaning it absorbs water readily. POE oils can absorb 15 times as much water as other oils designed for HCFC and CFC refrigerants. Take all necessary precautions to avoid exposure of the oil to the atmosphere.

Servicing Systems on Roofs and with Synthetic materials

POE (polyolester) compressor lubricants are known to cause long term damage to some synthetic roofing materials.

Exposure, even if immediately cleaned up, may cause embrittlement (leading to cracking) to occur in one year or more. When performing any service that may risk exposure of compressor oil to the roof, take appropriate precautions to protect roofing. Procedures which risk oil leakage include, but are not limited to, compressor replacement, repairing refrigerant leaks, replacing refrigerant components such as filter drier, pressure switch, metering device, coil, accumulator, or reversing valve.

Synthetic Roof Precautionary Procedure

1. Cover extended roof working area with an impermeable polyethylene (plastic) drip cloth or tarp. Cover an approximate 10x10 ft (3x3 m) area.
2. Cover area in front of the unit service panel with a terry cloth shop towel to absorb lubricant spills and prevent run-offs, and protect drop cloth from tears caused by tools or components.
3. Place terry cloth shop towel inside unit immediately under component(s) to be serviced and prevent lubricant run-offs through the louvered openings in the unit base.
4. Perform required service.
5. Remove and dispose of any oil contaminated material per local codes.

Liquid Line Filter Drier

This filter drier is specifically designed to operate with Puron. Use only factory-authorized components. Filter drier must be replaced whenever the refrigerant system is opened. When removing a filter drier, use a tubing cutter to cut the drier from the system. Do not unsweat a filter drier from the system. Heat from unsweating will release moisture and contaminants from drier into system.

Puron (R-410A) Refrigerant Charging

Refer to unit information plate and charging chart. Some R-410A refrigerant cylinders contain a dip tube to allow liquid refrigerant to flow from cylinder in upright position. For cylinders equipped with a dip tube, charge Puron units with cylinder in upright position and a commercial metering device in manifold hose. Charge refrigerant into suction-line.

TROUBLESHOOTING

Use the Troubleshooting Guides (See Tables 10-12) if problems occur with these units.

START-UP CHECKLIST

Use Start-Up checklist to ensure proper start-up procedures are followed.

PURON® (R-410A) QUICK REFERENCE GUIDE

- Puron refrigerant operates at 50-70 percent higher pressures than R-22. Be sure that servicing equipment and replacement components are designed to operate with Puron
- Puron refrigerant cylinders are rose colored.
- Recovery cylinder service pressure rating must be 400 psig, DOT 4BA400 or DOT BW400.
- Puron systems should be charged with liquid refrigerant. Use a commercial type metering device in the manifold hose when charging into suction line with compressor operating
- Manifold sets should be minimum 700 psig high side and 180 psig low side with 550 psig low-side retard.
- Use hoses with minimum 700 psig service pressure rating.
- Leak detectors should be designed to detect HFC refrigerant.
- Puron, as with other HFCs, is only compatible with POE oils.
- Vacuum pumps will not remove moisture from oil.
- Do not use liquid-line filter driers with rated working pressures less than 600 psig.
- Do not leave Puron suction line filter driers in line longer than 72 hrs.
- Do not install a suction-line filter drier in liquid line.
- POE oils absorb moisture rapidly. Do not expose oil to atmosphere.
- POE oils may cause damage to certain plastics and roofing materials.
- Wrap all filter driers and service valves with wet cloth when brazing.
- A factory approved liquid-line filter drier is required on every unit.
- Do NOT use an R-22 TXV.
- Never open system to atmosphere while it is under a vacuum.
- When system must be opened for service, recover refrigerant, evacuate then break vacuum with dry nitrogen and replace filter driers. Evacuate to 500 microns prior to recharging.
- Do not vent Puron into the atmosphere.
- Observe all **warnings**, **cautions**, and **bold** text.
- All indoor coils must be installed with a hard shutoff Puron TXV metering device.

Table 11 – Troubleshooting Guide - Cooling or Heat Pump Heating Mode

SYMPTOM	CAUSE	REMEDY
Compressor and Outdoor fan will not start.	Power Failure	Call power company.
	Fuse blown or circuit breaker tripped	Replace fuse or reset circuit breaker.
	Defective thermostat, contactor, transformer, or control relay	Replace component.
	Insufficient line voltage	Determine cause and correct.
	Incorrect or faulty wiring	Check wiring diagram and rewire correctly.
	Thermostat setting too high	Lower thermostat setting below room temperature.
Compressor will not start but Outdoor fan runs.	Faulty wiring or loose connections in compressor circuit	Check wiring and repair or replace.
	Compressor motor burned out, seized, or internal over-load open	Determine cause Replace compressor.
	Defective run/start capacitor, overload, start relay	Determine cause and replace.
	One leg of 3–phase power dead	Replace fuse or reset circuit breaker. Determine cause.
Three–phase scroll compressor makes excessive noise, and there may be a low pressure differential.	Scroll compressor is rotating in the wrong direction	Correct the direction of rotation by reversing the 3–phase power leads to the unit.
Compressor cycles (other than normally satisfying thermostat).	Refrigerant overcharge or undercharge	Recover refrigerant, evacuate system, and recharge to capacities shown on nameplate.
	Defective compressor	Replace and determine cause.
	Insufficient line voltage	Determine cause and correct.
	Blocked Outdoor	Determine cause and correct.
	Defective run/start capacitor, overload or start relay	Determine cause and replace.
	Defective thermostat	Replace thermostat.
	Faulty Outdoor–fan motor or capacitor	Replace.
	Damaged reversing valve	Determine cause and correct
	Restriction in refrigerant system	Locate restriction and remove.
Compressor operates continuously.	Dirty air filter	Replace filter.
	Unit undersized for load	Decrease load or increase unit size.
	Thermostat set too low	Reset thermostat.
	Low refrigerant charge	Locate leak, repair, and recharge.
	Mechanical damage in compressor.	Replace compressor.
	Air in system	Recover refrigerant, evacuate system, and recharge.
	Frosted coil with incorrect defrost operation	Check defrost time settings, Reset as necessary Check defrost temperature switch, Replace as nec-essary
	Outdoor coil dirty or restricted	Clean coil or remove restriction .
Excessive head pressure.	Dirty air filter	Replace filter.
	Dirty Indoor or Outdoor coil	Clean coil.
	Refrigerant overcharged	Recover excess refrigerant.
	Air in system	Recover refrigerant, evacuate system, and recharge.
	Indoor or Outdoor air restricted or air short–cycling	Determine cause and correct.
Head pressure too low.	Low refrigerant charge	Check for leaks, repair, and recharge.
	Compressor IPR leaking	Replace compressor.
	Restriction in liquid tube	Remove restriction.
Excessive suction pressure.	High heat load	Check for source and eliminate.
	Compressor IPR leaking	Replace compressor.
	Refrigerant overcharged	Recover excess refrigerant.
	Reversing valve hung up or leaking internally	Replace valve
Suction pressure too low.	Dirty air filter	Replace Filter.
	Low refrigerant charge	Check for leaks, repair, and recharge.
	Metering device or low side restricted	Remove source of restriction.
	Insufficient Indoor airflow	Increase air quantity. Check filter — replace if neces-sary.
	Temperature too low in conditioned area	Reset thermostat.
	Outdoor ambient below 55°F (12.8°C)	Install low–ambient kit.
	Field–installed filter–drier restricted	Replace.
	(Heat) Outdoor coil frosted	Move timer on control board to 30 minutes between defrost cycles
Compressor runs but outdoor fan does not	NC (normally closed) contacts on defrost board open	Check condition of relay on board Replace if neces-sary

Table 12 – Troubleshooting Guide–Heating

SYMPTOM	CAUSE	REMEDY
Burners will not ignite	Water in gas line	Drain. Install drip leg.
	No power to furnace	Check power supply fuses, wiring or circuit breaker.
	No 24-v power supply to control circuit	Check transformer. NOTE: Some transformers have internal over-current protection that requires a cool-down period to reset.
	Mis-wired or loose connections	Check all wiring and wire nut connections
	Misaligned spark electrodes	Check flame ignition and sense electrode positioning. Adjust as necessary.
	No gas at main burners	1. Check gas line for air. Purge as necessary. NOTE: After purging gas line of air, wait at least 5 minutes for any gas to dissipate before attempting to light unit. 2. Check gas valve.
Inadequate heating	Dirty air filter	Clean or replace filter as necessary
	Gas input to furnace too low	Check gas pressure at manifold match with that on unit nameplate
	Unit undersized for application	Replace with proper unit or add additional unit
	Restricted airflow	Clean or replace filter. Remove any restriction.
	Limit switch cycles main burners	Check rotation of blower, temperature rise of unit. Adjust as necessary.
Poor flame characteristics	Incomplete combustion results in: Aldehyde odors, carbon monoxide, sooting flame, floating flame	1. Tighten all screws around burner compartment 2. Cracked heat exchanger. Replace. 3. Unit over-fired. Reduce input (change orifices or adjust gas line or manifold pressure). 4. Check burner alignment. 5. Inspect heat exchanger for blockage. Clean as necessary.

Table 13 – Troubleshooting Guide–LED Status Codes

SYMPTOM	CAUSE	REMEDY
No Power Hardware failure (LED OFF)	Loss of power to control module (IGC)*.	Check 5-amp fuse son IGC*, power to unit, 24-v circuit breaker, and transformer. Units without a 24-v circuit breaker have an internal overload in the 24-v transformer. If the overload trips, allow 10 minutes for automatic reset.
Limit switch faults (LED 2 flashes)	High temperature limit switch is open.	Check the operation of the indoor (evaporator) fan motor. Ensure that the supply-air temperature rise is in accordance with the range on the unit nameplate. Clean or replace filters.
Flame sense fault (LED 3 flashes)	The IGC* sensed flame that should not be present.	Reset unit. If problem persists, replace control board.
4 consecutive limit switch faults (LED 4 flashes)	Inadequate airflow to unit.	Check the operation of the indoor (evaporator) fan motor and that supply-air temperature rise agrees with range on unit nameplate information.
Ignition lockout (LED 5 flashes)	Unit unsuccessfully attempted ignition for 15 minutes.	Check ignitor and flame sensor electrode spacing, gaps, etc. Ensure that fame sense and ignition wires are properly terminated. Verify that unit is obtaining proper amount of gas.
Pressure Switch motor fault (LED 6 flashes)	Open pressure switch.	Verify wiring connections to pressure switch and inducer motor. Verify pressure switch hose is tightly connected to both inducer housing and pressure switch. Verify inducer wheel is properly attached to inducer motor shaft. Verify inducer motor shaft is turning.
Rollout switch fault (LED 7 flashes)	Rollout switch has opened.	Rollout switch will automatically reset, but IGC* will continue to lockout unit. Check gas valve operation. Ensure that induced-draft blower wheel is properly secured to motor shaft. Inspect heat exchanger. Reset unit at unit disconnect.
Internal control fault (LED 8 flashes)	Microprocessor has sensed an error in the software or hardware.	If error code is not cleared by resetting unit power, replace the IGC*.
Temporary 1 hr auto reset (LED 9 flashes)	Electrical interference impeding IGC software	Reset 24-v. to control board or turn thermostat off, then on again. Fault will automatically reset itself in one (1) hour.

***WARNING ⚠:** If the IGC must be replaced, be sure to ground yourself to dissipate any electrical charge that my be present before handling new control board. The IGC is sensitive to static electricity and my be damaged if the necessary precautions are not taken.
IMPORTANT: Refer to Table 12–Troubleshooting Guide–Heating for additional troubleshooting analysis.
LEGEND
IGC—Integrated Gas Unit Controller
LED—Light–Emitting Diode

START-UP CHECKLIST

(Remove and Store in Job Files)

I. PRELIMINARY INFORMATION

MODEL NO.:_____

SERIAL NO.:_____

DATE:_____

TECHNICIAN:_____

II. PRESTART-UP (Insert check mark in box as each item is completed)

( ) VERIFY THAT ALL PACKING MATERIALS HAVE BEEN REMOVED FROM UNIT

( ) REMOVE ALL SHIPPING HOLD DOWN BOLTS AND BRACKETS PER INSTALLATION INSTRUCTIONS

( ) CHECK ALL ELECTRICAL CONNECTIONS AND TERMINALS FOR TIGHTNESS

( ) CHECK GAS PIPING FOR LEAKS (WHERE APPLICABLE)

( ) CHECK THAT INDOOR (EVAPORATOR) AIR FILTER IS CLEAN AND IN PLACE

( ) VERIFY THAT UNIT INSTALLATION IS LEVEL

( ) CHECK FAN WHEEL, AND PROPELLER FOR LOCATION IN HOUSING/ORIFICE AND SETSCREW TIGHTNESS

III. START-UP

ELECTRICAL

SUPPLY VOLTAGE_____

COMPRESSOR AMPS_____

INDOOR (EVAPORATOR) FAN AMPS_____

TEMPERATURES

OUTDOOR (CONDENSER) AIR TEMPERATURE_____DB

RETURN-AIR TEMPERATURE_____DB_____WB

COOLING SUPPLY AIR_____DB_____WB

HEAT PUMP SUPPLY AIR_____

GAS HEAT SUPPLY AIR_____

PRESSURES

GAS INLET PRESSURE_____IN. W.C.

GAS MANIFOLD PRESSURE_____IN. W.C.

REFRIGERANT SUCTION_____PSIG, SUCTION LINE TEMP*_____

REFRIGERANT DISCHARGE_____PSIG, LIQUID TEMP†_____

( ) VERIFY REFRIGERANT CHARGE USING CHARGING CHARTS

GAS HEAT TEMPERATURE RISE

TEMPERATURE RISE (See Literature) RANGE_____

MEASURED TEMPERATURE RISE_____

* Measured at suction inlet to compressor

† Measured at liquid line leaving condenser.

Copyright 2009 Carrier Corp. • 7310 W. Morris St. • Indianapolis, IN 46231

Edition Date: 08/09

Catalog No: 48VT–06SI

Manufacturer reserves the right to change, at any time, specifications and designs without notice and without obligations.

Replaces: 48VT–05SI