50TC
Single Package Rooftop,
Cooling Only, with Optional Electric Heat
Two Stage Cooling Capacity Control
with Puron® (R–410A) Refrigerant
Sizes: 17, 20, 24, 28, 30

Carrier
turn to the experts™

Submittal Data

- PERFORMANCE DATA
- CERTIFIED DIMENSION PRINTS
- CERTIFIED ROOF CURB DIMENSION PRINTS
- SERVICE OPTION DIMENSION PRINTS

Copyright 2012 Carrier Corp. • 7310 W. Morris St. • Indianapolis, IN 46231
Printed in U.S.A. Edition Date: 02/12

Catalog No: 50TC–16SB

Manufacturer reserves the right to change, at any time, specifications and designs without notice and without obligations.

Replaces: 50TC–12SB

Job Data: _____ Location: _____
Buyer: _____ Buyer P.O.#: _____ Carrier: _____
Unit Number: _____ Model Number: _____
Unit Designation: _____
Performance Data Certified By: _____

Certified to ISO 9001

Use of the AHRI Certified TM Mark indicates a manufacturer's participation in the program For verification of certification for individual products, go to www.ahridirectory.org.

50TC

DESCRIPTION

50TC units are single-packaged electric cooling only units that are pre-wired and pre-charged with environmentally sound Puron® (R-410A) HFC refrigerant. Electric heat is available as a field-installed accessory.

STANDARD FEATURES

Base Unit

- Puron (R-410A) HFC refrigerant
- EER's up to 11.0
- IEER's:
  - — up to 11.8 with standard motor
  - — up to 12.9 with 2 speed/VFD indoor fan motor
- Rated in accordance with AHRI Standard 340/360
- Designed in accordance with Underwriters' Laboratories Standard 1995
- Listed by ETL
- ASHRAE 90.1 energy compliant
- Rated in accordance with AHRI Standard 340/360
- Two-stage cooling capacity control
- Non-corrosive composite sloping design; side or center drain condensate pan. Meets ASHRAE Standard 62
- Standard cooling operating range from 30°F up to 115°F (-1°C up to 46°C).
- Dedicated vertical and horizontal airflow models available as factory option. No special field kits required.
- Two-inch disposable return air filters
- Provisions for thru-the-bottom power entry capability as standard in an environmentally protected area.
- Single point electric connections
- 24-volt control circuit protected with resettable circuit breaker and 75-VA transformer
- Belt drive, constant torque, permanently lubricated evaporator-fan motor
- Blower bearing extended lubrication line on all sizes
- Totally enclosed condenser motors with permanently lubricated bearings
- Low-pressure and high-pressure switch protection
- Full perimeter base rail with built-in rigging adapters and fork truck slots
- New central terminal board facilitating simple safety circuit troubleshooting and simplified control box arrangement.
- High performance belt drive motor with variable pitch pulleys, quick adjust belt system and fan belt protection

Cabinet

- Access panels with easy grip handles
- Innovative, easy starting, no-strip screw feature on unit access panels
- Pre-painted exterior panels and primer-coated interior panels tested to 500 hours salt spray protection
- Fully insulated cabinet

Refrigerant System

- Acutrol™ refrigerant metering system
- Liquid line filter drier on each circuit
- Scroll compressors with internal line-break overload protection
- Copper tube, aluminum fin evaporator coil
- Round Tube/Plate Fin (RTPF) condenser coils on all model sizes or NOVATION™ all aluminum condenser coils available on 17 - 28 sizes.

Standard Warranty

- 5-year compressor parts
- 5-year electric heater parts
- 1-year parts
- 3-year NOVATION™ condenser coil parts

PERFORMANCE DATA

Unit Operating Weight _____ lb

Cooling

Gross Total Capacity: _____ Btuh

at Condenser Air Temperature _____ °F

Gross Sensible Capacity: _____ Btuh

Compressor Power Input: _____ kW

Indoor Entering db _____ °F wb _____ °F

Airflow _____CFM External Static Pressure _____ in.wg

Indoor Fan Motor Size _____ Hp

Exhaust Fan Motor Size _____ Hp

Curb Weight _____ lb

Heating

Heating Capacity:

Stage 1 _____ Btuh

Stage 2 _____ Btuh

Heating Capacity Total _____ Btuh

Stage 1 _____ kW

Stage 2 _____ kW

Heating Capacity Total _____ kW

50TC

ELECTRICAL DATA

Power Supply to Unit _____ Volts _____ Phase _____Hz

Minimum Circuit Amps _____ Maximum Overcurrent Protection _____

SUBMITTAL DATA

Job Name _____

Architect _____

Engineer _____

Contractor _____

Unit Designation _____

OPTIONS AND ACCESSORIES

50TC

FACTORY-INSTALLED OPTIONS (FIOPs)

- ☐ Staged Air Volume (SAV) system utilizes a Variable Frequency Drive (VFD) to automatically adjust the indoor fan motor for 2 speed indoor fan motor control. Conforms to ASHRAE 90.1 2010 Standard – section 6.4.3.10.b. Not available with Humidi-MiZer® option.
- ☐ Vertical air flow duct configuration models
- ☐ Horizontal air flow duct configuration models
- ☐ RTU Open protocol controller communicates to LON, MODBUS, BACNET and Johnson N2 protocols.
- ☐ CCN Direct Digital Control (DDC) - PremierLink
- ☐ Through the base connectors electric conduit/piping
- ☐ Standard Economizer with dry bulb sensing and barometric relief
- ☐ Standard Economizer with enthalpy sensing and barometric relief
- ☐ Ultra Low Leak economizer with maximum leakage rate equal or less than 4.0 cfm/sq. ft. at 1.0 in. w.g. Available on models with Staged Air Volume (SAV) 2 speed indoor fan motor only.
- ☐ 2 position motorized outdoor air damper
- ☐ 25% Manual outdoor air damper
- ☐ Humidi-MiZer adaptive dehumidification system available for sizes 17 – 28. Unit must be equipped with RTPF condenser coils.
- ☐ Non-fused disconnect
- ☐ Powered 115-volt convenience outlet
- ☐ Non-powered 115-volt convenience outlet
- ☐ Medium and High static motor options
- ☐ Return Air smoke detector
- ☐ Supply Air smoke detector
- ☐ CO_2 sensor
- ☐ Condenser hail guard - louvered style
- ☐ Special coating protection for evaporator and condenser coils

OPTIONAL WARRANTIES

- ☐ Complete Unit Parts only up to 5 years
- ☐ Complete Unit Parts and Labor up to 5 years

Many other optional warranties are available. See the *Commercial Start-Up and Optional Extended Warranty Price* price pages for further information.

FIELD INSTALLED ACCESSORIES

- ☐ EconoMi$er™ X – Ultra Low Leak electromechanical, gear driven with Honeywell W7220 digital controller. Used with 2 speed Staged Air Volume (SAV) systems only.
- ☐ Display Kit for Variable Frequency Drive (VFD), Staged Air Volume System. Allows additional set up and diagnostics of the unit VFD controller. Can be unit mounted or used with any other VFD model as a reusable device.
- ☐ EconoMi$er™ IV-electromechanical, gear driven with Belimo actuator (2-10v DC signal) and controller
- ☐ EconoMi$er™ 2-compatible with DDC controls; gear driven with Belimo actuator (4-20mA) signal and no controller
- ☐ Electric heater(s)
- ☐ Single point kit
- ☐ Power exhaust - centrifugal fan design
- ☐ Two-position motorized outdoor air damper
- ☐ 25% Manual outdoor air damper
- ☐ Roofcurb - 14 inch (356mm) tall
- ☐ Roofcurb - 24 inch (610mm) tall
- ☐ Adapter Curb (for sizes 17-28 only) - Adapts to Carrier DP/DR, TJ, HJ, TM, PG roofcurbs
- ☐ Condenser hail guard - louvered style
- ☐ Phase monitor (loss of phase/phase reversal)
- ☐ Winter start kit, down to 25°F (-4°C)
- ☐ Low ambient head pressure controller, down to -20°F (-29°C)
- ☐ Time Guard II compressor anti-cycle protection
- ☐ Four inch filter tracks
- ☐ Return Air smoke detector
- ☐ Supply Air smoke detector
- ☐ Thermostats and Sensors

Economizer Sensors

- ☐ Single Dry bulb control
- ☐ Differential Dry bulb control
- ☐ Single enthalpy control
- ☐ Differential enthalpy control
- ☐ CO_2 - wall mounted
- ☐ CO_2 - duct mounted
- ☐ CO_2 - unit mounted

CERTIFIED DIMENSION 50TC-*17, 20

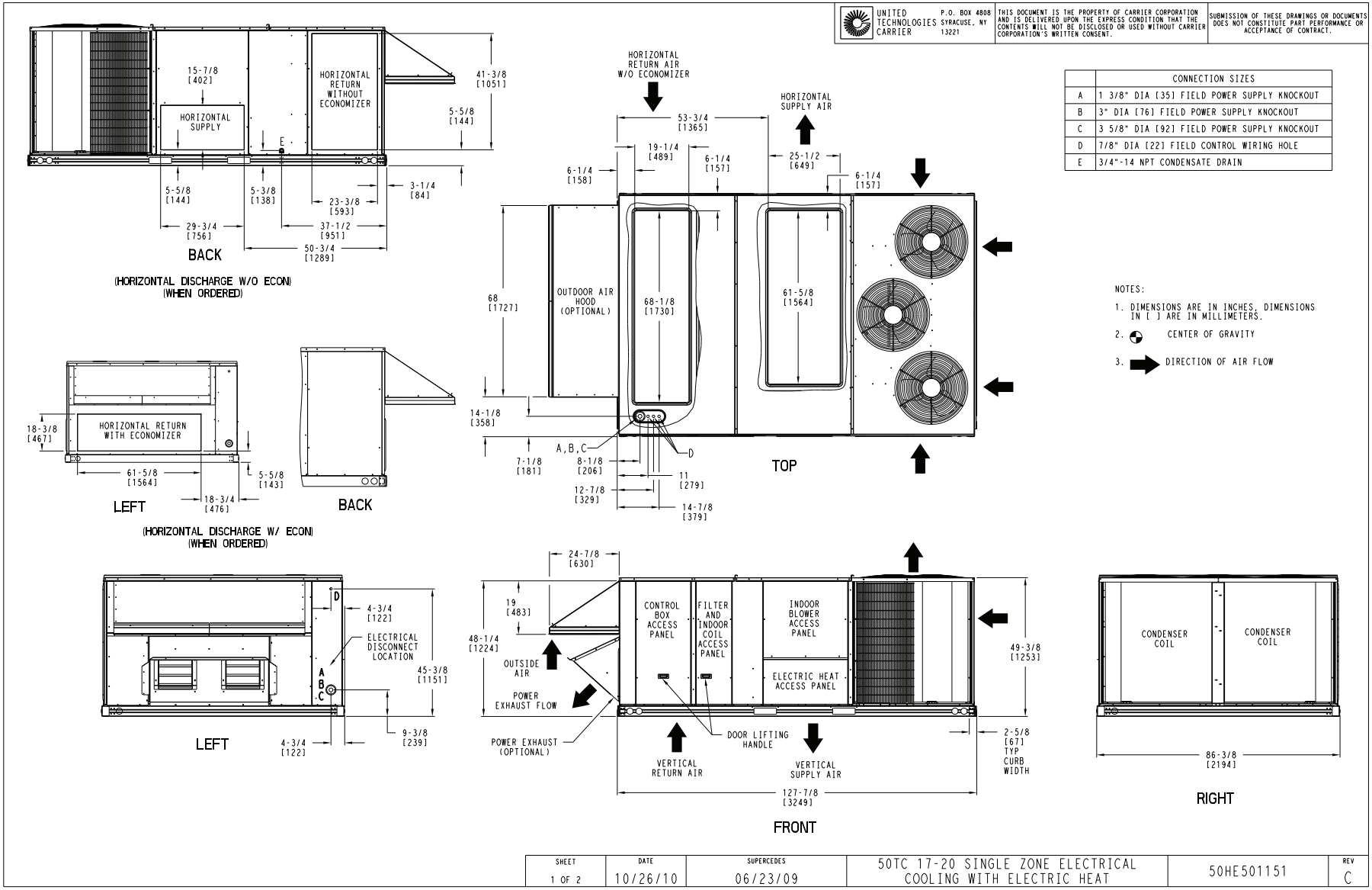

C101237

CERTIFIED DIMENSION 50TC-*17, 20

UNIT	OUTDOOR COIL TYPE	STD UNIT WEIGHT *		CORNER WEIGHT (A)		CORNER WEIGHT (B)		CORNER WEIGHT (C)		CORNER WEIGHT (D)		C.G.		
		LBS.	KG.	LBS.	KG.	LBS.	KG.	LBS.	KG.	LBS.	KG.	X	Y	Z
50TC17	MCHX	1697	771	403	183	412	187	446	203	436	198	44 3/4 [1137]	64 3/4 [1645]	16 1/2 [419]
50TC20	MCHX	1712	778	407	185	416	189	450	204	440	200	44 3/4 [1137]	64 3/4 [1645]	16 1/2 [419]
50TC17	RTPF	1808	822	415	189	492	224	488	222	412	187	42 29/32 [1090]	69 1/4 [1759]	16 1/2 [419]
50TC20	RTPF	1823	829	419	190	496	226	493	224	415	189	42 29/32 [1090]	69 1/4 [1759]	16 1/2 [419]

RTPF - ROUND TUBE, PLATE FIN (COPPER/ALUM)
MCHX - NOVATION (ALUM/ALUM)

* STANDARD UNIT WEIGHT IS WITHOUT ELECTRIC HEAT AND WITHOUT PACKAGING.
FOR OTHER OPTIONS AND ACCESSORIES, REFER TO THE PRODUCT DATA CATALOG.

UNITED TECHNOLOGIES CARRIER
P.O. BOX 4808
SYRACUSE, NY
13221

THIS DOCUMENT IS THE PROPERTY OF CARRIER CORPORATION AND IS DELIVERED UPON THE EXPRESS CONDITION THAT THE CONTENTS WILL NOT BE DISCLOSED OR USED WITHOUT CARRIER CORPORATION'S WRITTEN CONSENT.

SUBMISSION OF THESE DRAWINGS OR DOCUMENTS DOES NOT CONSTITUTE PART PERFORMANCE OR ACCEPTANCE OF CONTRACT.

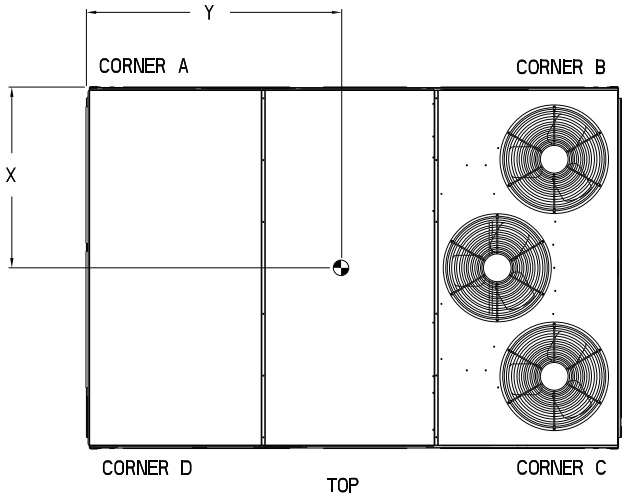

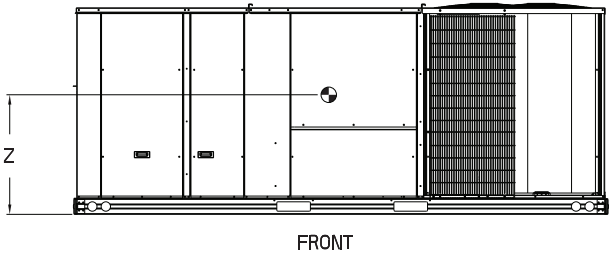

SHEET	DATE	SUPERCEDES			REV
2 OF 2	10/26/10	06/23/09	50TC 17-20 SINGLE ZONE ELECTRICAL COOLING WITH ELECTRIC HEAT	50HE501151	C

C101238

CERTIFIED DIMENSION 50TC-*24, 28

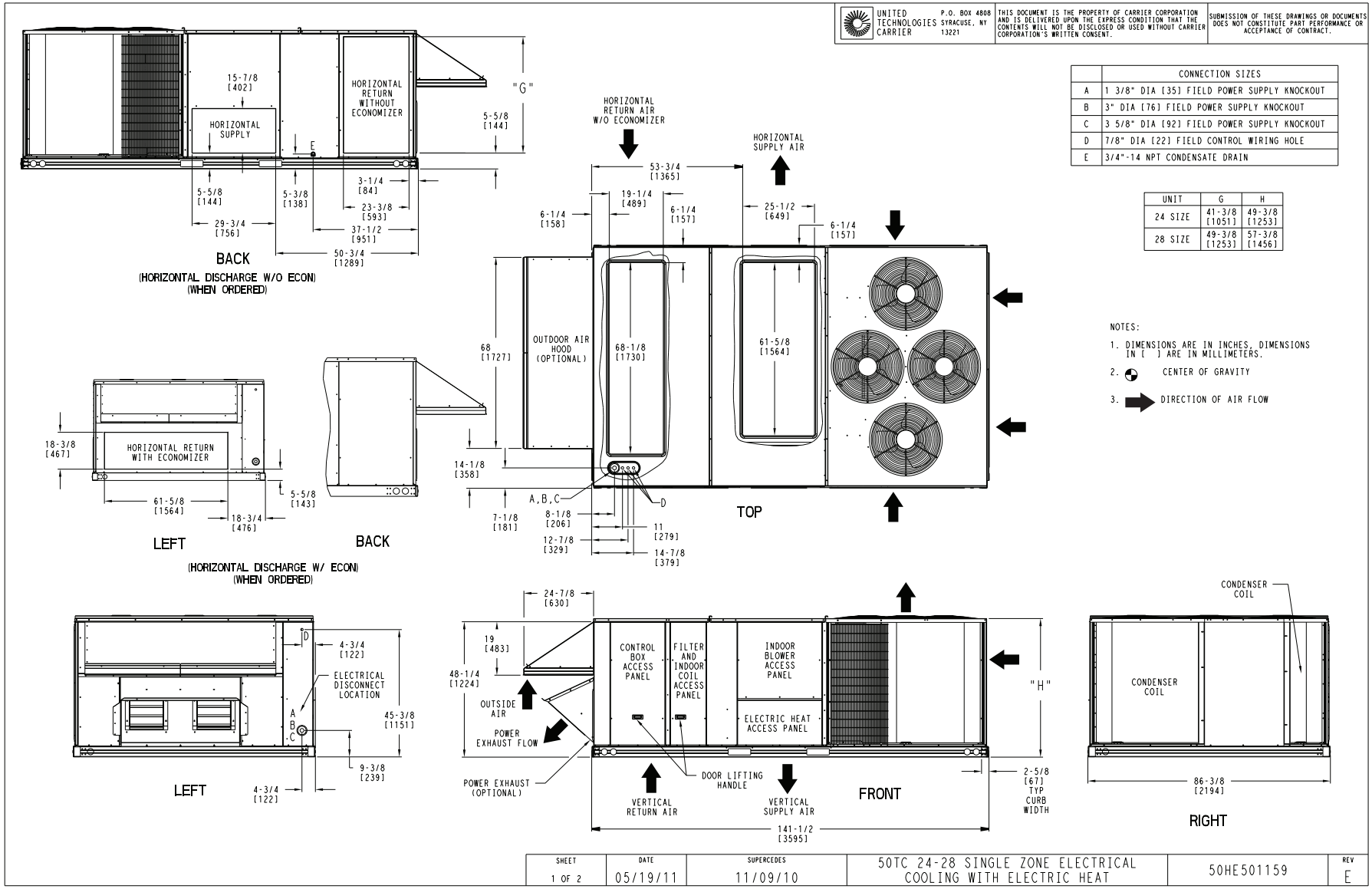

C11249

CERTIFIED DIMENSION 50TC-*24, 28

UNIT	OUTDOOR COIL TYPE	STD. UNIT WEIGHT *		CORNER WEIGHT (A)		CORNER WEIGHT (B)		CORNER WEIGHT (C)		CORNER WEIGHT (D)		C.G.		
		LBS.	KG.	LBS.	KG.	LBS.	KG.	LBS.	KG.	LBS.	KG.	X	Y	Z
50TC24	MCHX	1862	846	359	163	506	230	583	265	414	188	46 1/8 [1172]	82 7/8 [2105]	16 1/2 [419]
50TC28	MCHX	1991	905	384	174	541	246	624	284	443	201	46 1/8 [1172]	82 7/8 [2105]	19 [483]
50TC24	RTPF	1973	897	532	242	522	237	456	207	464	211	40 5/32 [1020]	70 [1778]	16 1/2 [419]
50TC28	RTPF	2098	954	545	248	539	245	504	229	510	232	41 21/32 [1058]	70 1/4 [1784]	19 [483]

RTPF - ROUND TUBE, PLATE FIN (COPPER/ALUM)
MCHX - NOVATION (ALUM/ALUM)

* STANDARD UNIT WEIGHT IS WITHOUT ELECTRIC HEAT AND WITHOUT PACKAGING.
FOR OTHER OPTIONS AND ACCESSORIES, REFER TO THE PRODUCT DATA CATALOG.

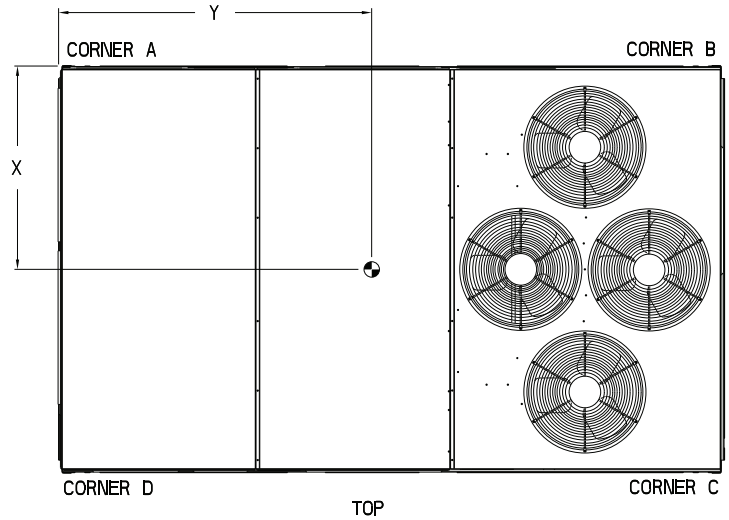

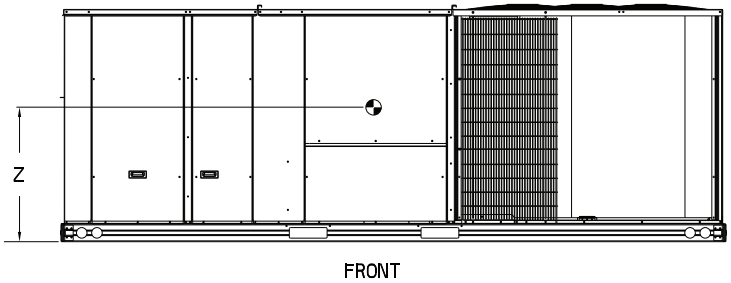

UNITED TECHNOLOGIES CARRIER
P.O. BOX 4808
SYRACUSE, NY
13221

THIS DOCUMENT IS THE PROPERTY OF CARRIER CORPORATION AND IS DELIVERED UPON THE EXPRESS CONDITION THAT THE CONTENTS WILL NOT BE DISCLOSED OR USED WITHOUT CARRIER CORPORATION'S WRITTEN CONSENT.

SUBMISSION OF THESE DRAWINGS OR DOCUMENTS DOES NOT CONSTITUTE PART PERFORMANCE OR ACCEPTANCE OF CONTRACT.

SHEET	DATE	SUPERCEDES			REV
2 OF 2	05/19/11	11/09/10	50TC 24-28 SINGLE ZONE ELECTRICAL COOLING WITH ELECTRIC HEAT	50HE501159	E

C11250

CERTIFIED DIMENSION 50TC-*30

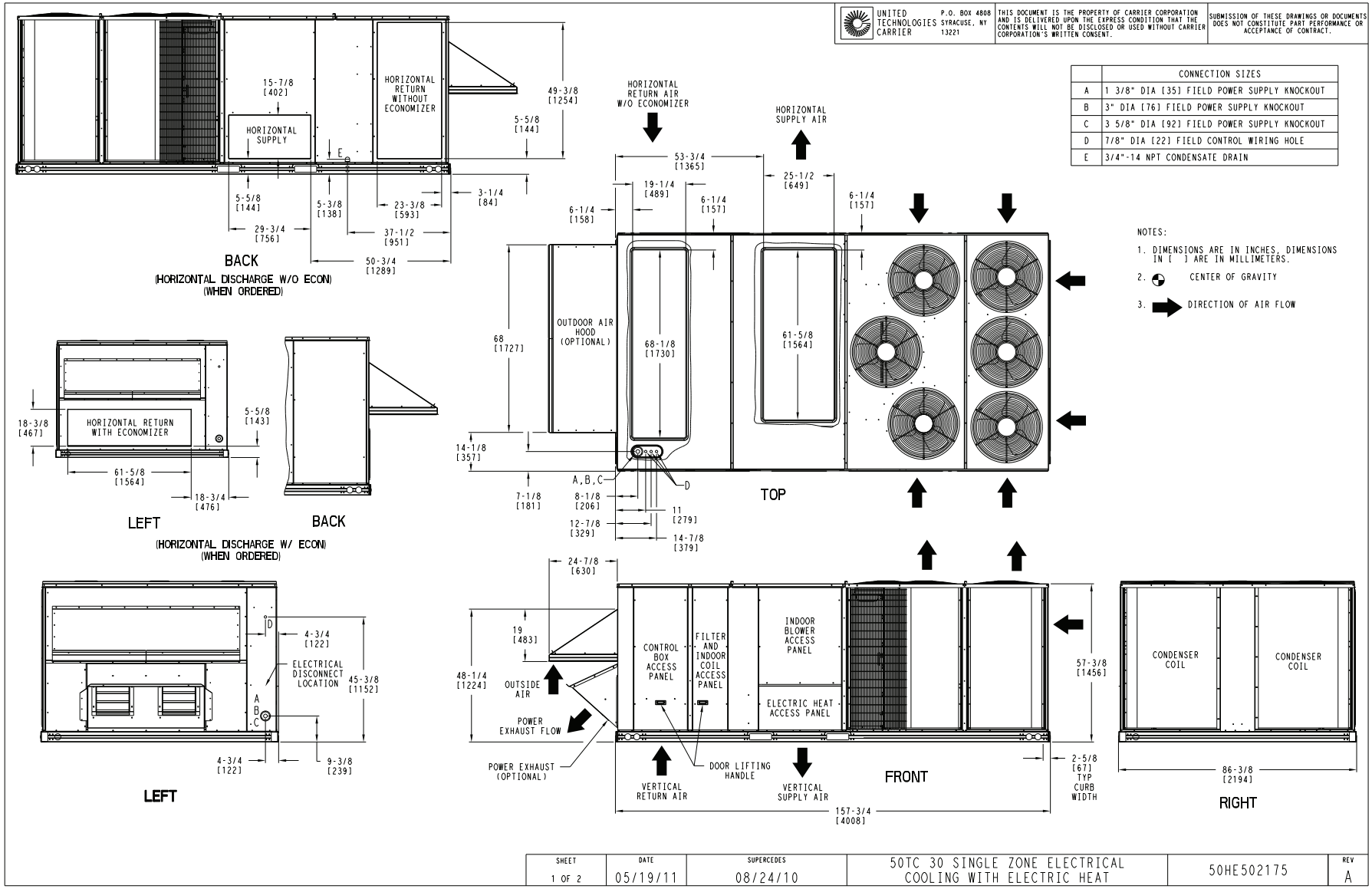

C11245

CERTIFIED DIMENSION 50TC-*30

UNIT	STD UNIT WEIGHT *		CORNER WEIGHT (A)		CORNER WEIGHT (B)		CORNER WEIGHT (C)		CORNER WEIGHT (D)		C.G.		
	LBS.	KG.	LBS.	KG.	LBS.	KG.	LBS.	KG.	LBS.	KG.	X	Y	Z
50TC30	2513	1142	664	302	566	257	591	269	693	315	44 [1118]	72 1/2 [1842]	19 [483]

* STANDARD UNIT WEIGHT IS WITHOUT ELECTRIC HEAT AND WITHOUT PACKAGING.
FOR OTHER OPTIONS AND ACCESSORIES, REFER TO THE PRODUCT DATA CATALOG.

UNITED TECHNOLOGIES CARRIER
P.O. BOX 4808
SYRACUSE, NY
13221

THIS DOCUMENT IS THE PROPERTY OF CARRIER CORPORATION AND IS DELIVERED UPON THE EXPRESS CONDITION THAT THE CONTENTS WILL NOT BE DISCLOSED OR USED WITHOUT CARRIER CORPORATION'S WRITTEN CONSENT.

SUBMISSION OF THESE DRAWINGS OR DOCUMENTS DOES NOT CONSTITUTE PART PERFORMANCE OR ACCEPTANCE OF CONTRACT.

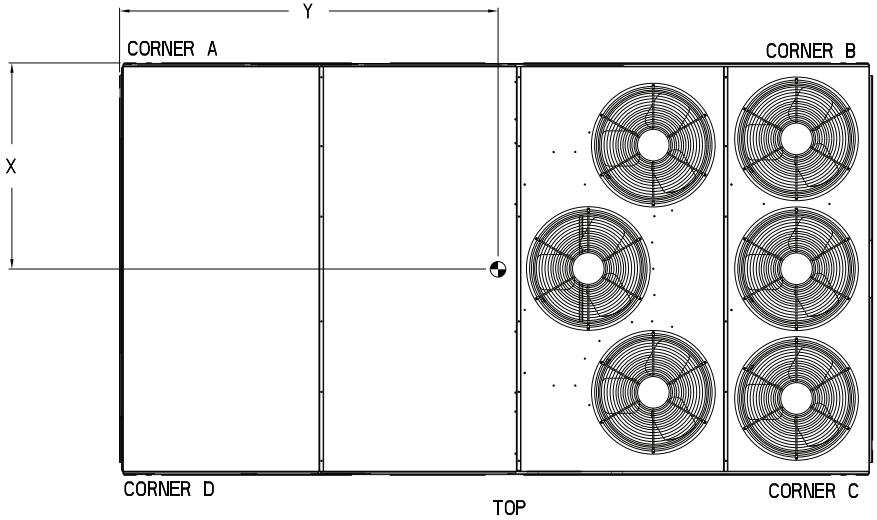

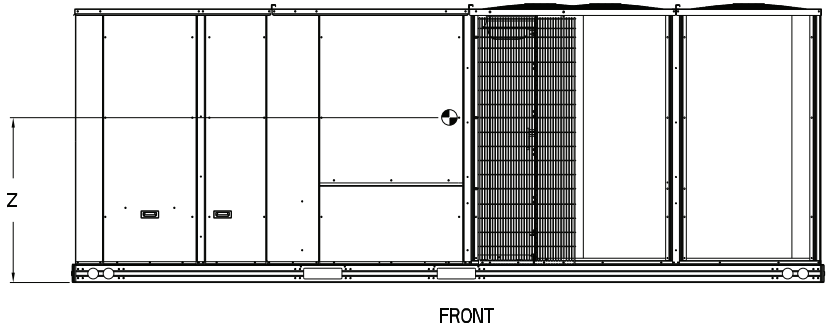

SHEET	DATE	SUPERCEDES			REV
2 OF 2	05/19/11	08/24/10	50TC 30 SINGLE ZONE ELECTRICAL COOLING WITH ELECTRIC HEAT	50HE502175	A

C11246

ROOF CURB DETAILS - 17 & 20 SIZE UNITS

UNIT SIZE	"A"	ROOF CURB ACCESSORY
17,20	1'-2" [356.0] 2'-0" [610.0]	CRRFCURB045A00 CRRFCURB046A00

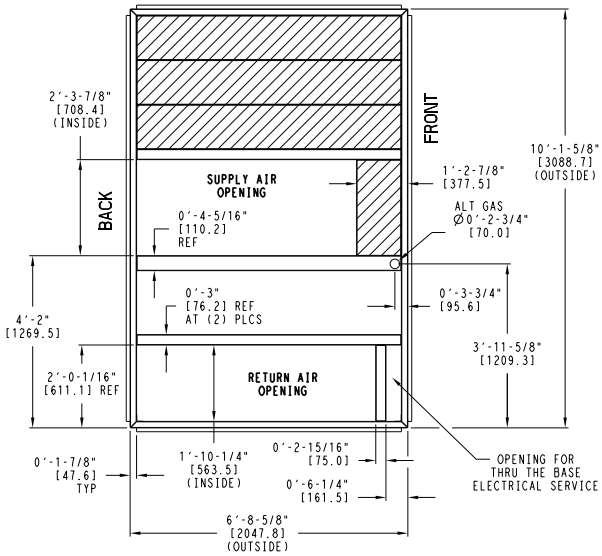

NOTES:

1 ROOF CURB ACCESSORY IS SHIPPED UNASSEMBLED.

2 DIMENSIONS IN [ ] ARE IN MILLIMETERS.

3 ROOF CURB GALVANIZED STEEL.

4 ATTACH DUCTWORK TO CURB (FLANGES ON DUCT REST ON CURB)

5 SERVICE CLEARANCE 4 ft ON EACH SIDE

DIRECTION OF AIR FLOW

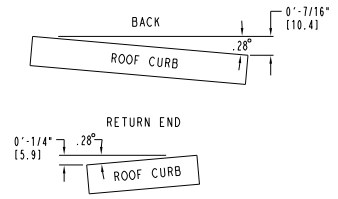

MAX CURB LEVELING TOLERANCES

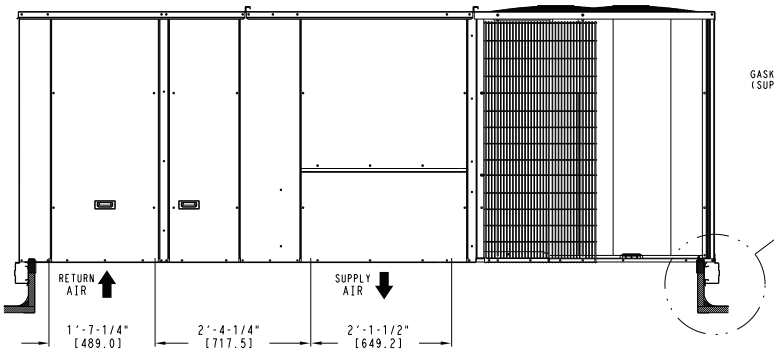

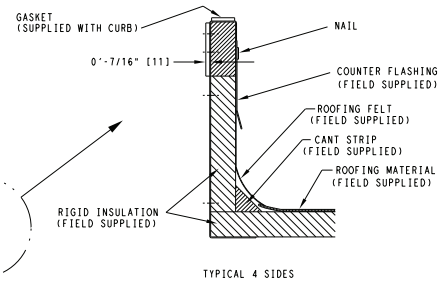

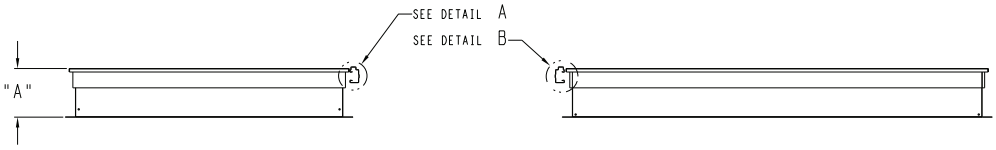

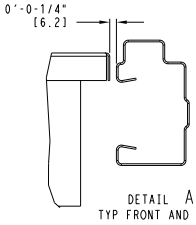

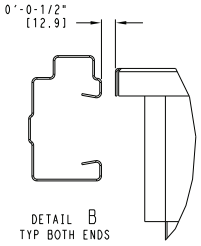

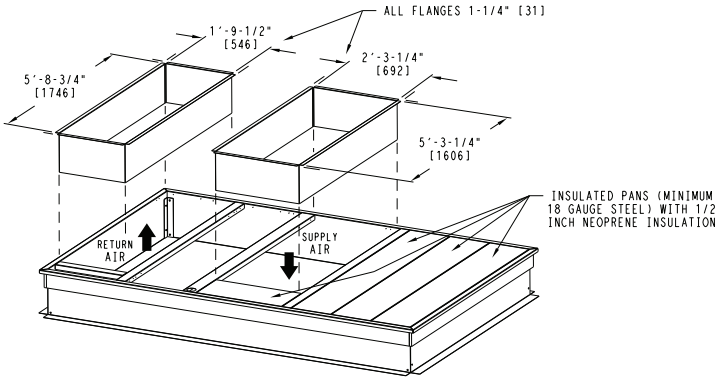

C09139A

50TC

ROOF CURB DETAILS - 24 & 28 SIZE UNITS

50TC

UNIT SIZE	"A"	ROOF CURB ACCESSORY
24,28	1'-2" [356.0] 2'-0" [610.0]	CRRFCURB047A00 CRRFCURB048A00

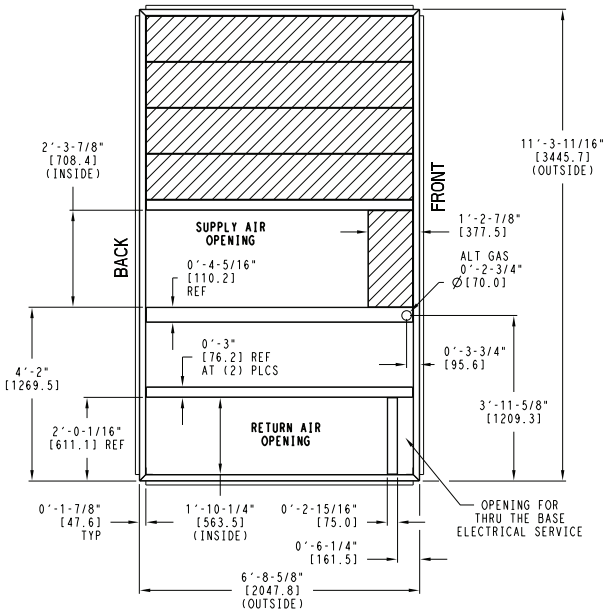

NOTES:

1 ROOF CURB ACCESSORY IS SHIPPED UNASSEMBLED.

2 DIMENSIONS IN [ ] ARE IN MILLIMETERS.

3 ROOF CURB GALVANIZED STEEL.

4 ATTACH DUCTWORK TO CURB (FLANGES ON DUCT REST ON CURB)

5 SERVICE CLEARANCE 4 ft ON EACH SIDE

➡ DIRECTION OF AIR FLOW

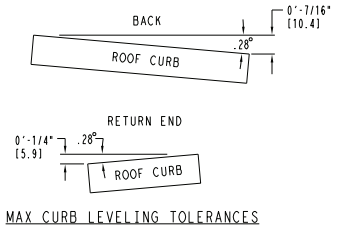

MAX CURB LEVELING TOLERANCES

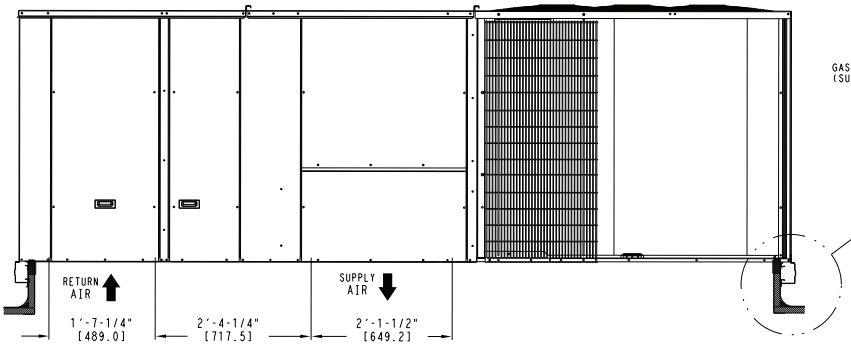

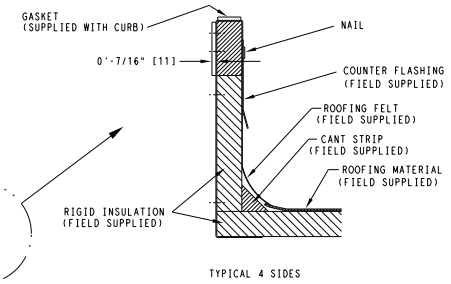

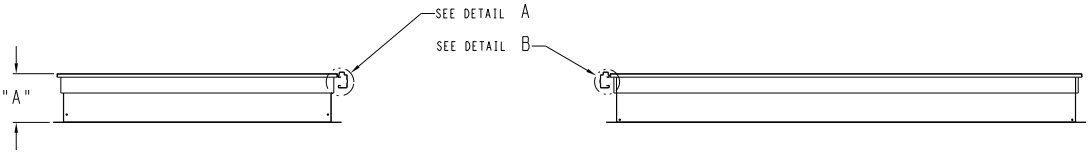

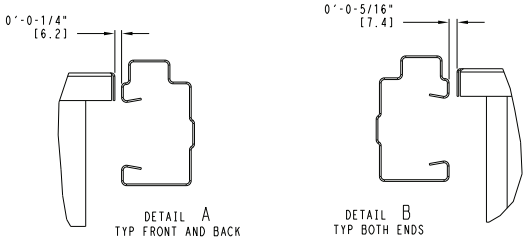

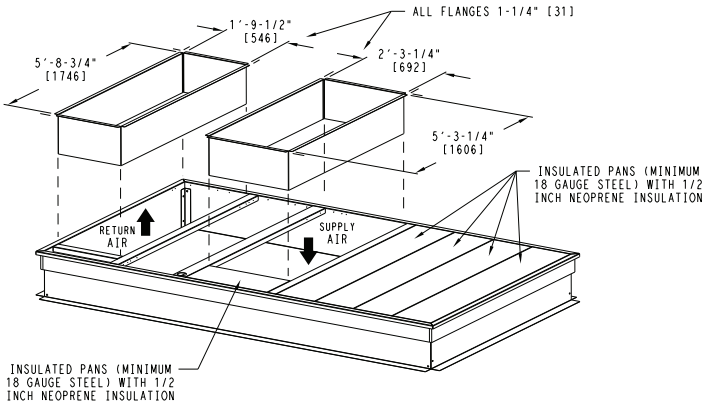

C09140A

ROOF CURB DETAILS - 30 SIZE UNIT

UNIT SIZE	"A"	ROOF CURB ACCESSORY
30	1'-2" [356.0] 2'-0" [610.0]	CRRFCURB049A00 CRRFCURB050A00

NOTES:
1 ROOF CURB ACCESSORY IS SHIPPED UNASSEMBLED.
2 BOLT HEADS TO BE ON INSIDE OF FLANGE. CLEARANCE IS [11] 0-0-7/16" TYP ALL CORNERS.
3 DIMENSIONS IN [ ] ARE IN MILLIMETERS.
4 ROOF CURB GALVANIZED STEEL.
5 ATTACH DUCTWORK TO CURB (FLANGES ON DUCT REST ON CURB)
6 SERVICE CLEARANCE 4 ft ON EACH SIDE
➡ DIRECTION OF AIR FLOW

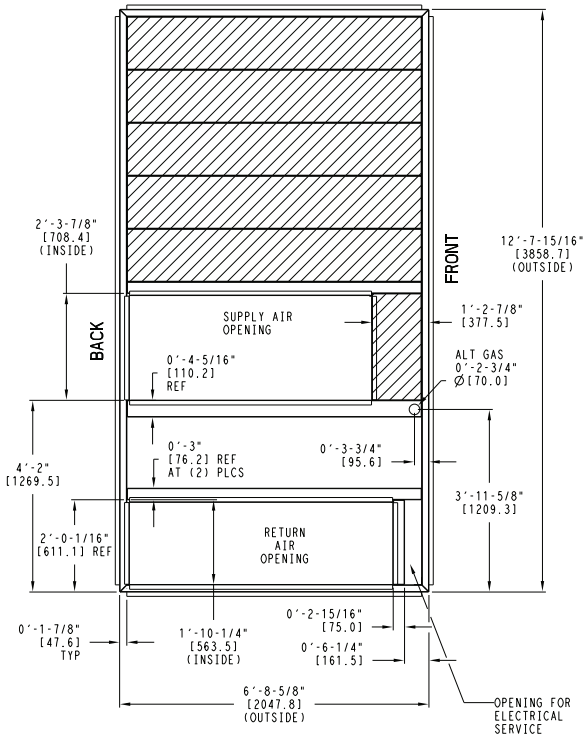

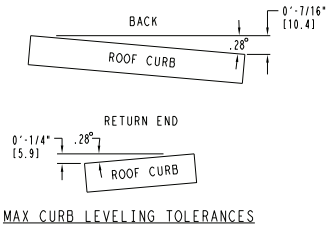

MAX CURB LEVELING TOLERANCES

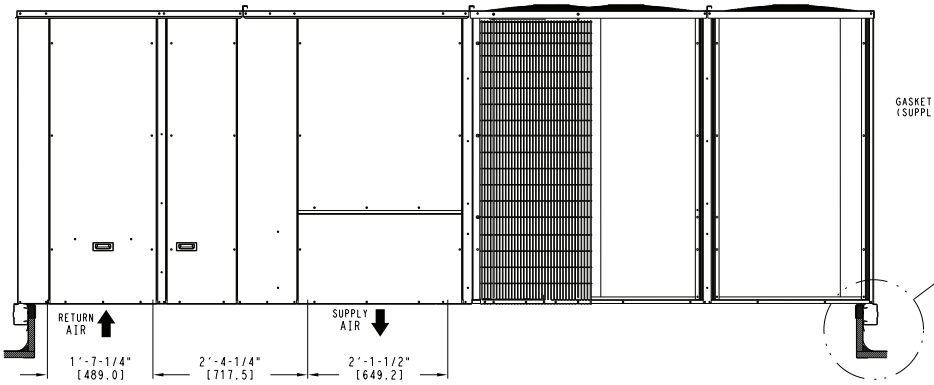

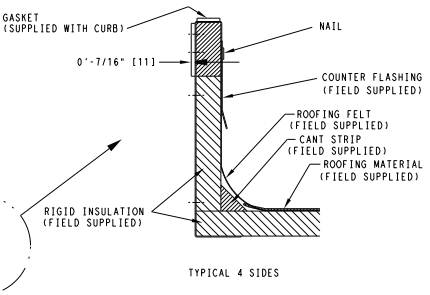

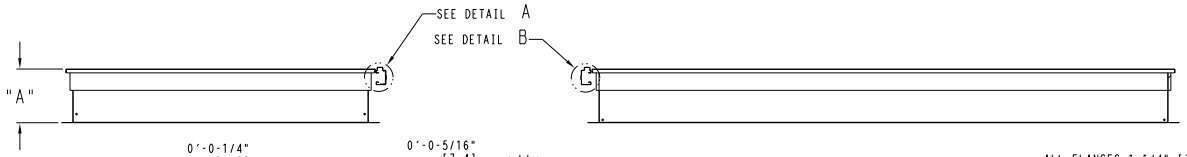

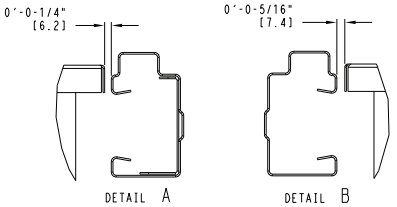

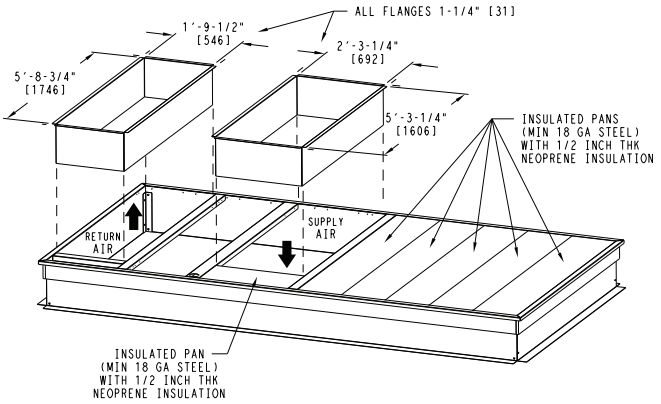

C11251