50TCQ12
Single Package Rooftop
Heat Pump
with Puron® (R−410A) Refrigerant
Size 12

Carrier®
Turn to the Experts.℠

Installation Instructions

NOTE: Read the entire instruction manual before starting the installation

TABLE OF CONTENTS

SAFETY CONSIDERATIONS 1

INSTALLATION 4

Step 1 - Plan for Unit Location 4

Step 2 - Plan for Sequence of Unit Installation 5

Step 3 - Inspect Unit 5

Step 4 - Provide Unit Support 5

Step 5 - Field Fabricate Ductwork 7

Step 6 - Rig and Place Unit 7

Step 7 - Convert to Horizontal & Connect Ductwork . 8

Step 8 - Install Outside Air Hood 8

Step 9 - Install External Condensate Trap and Line . 10

Step 10 - Make Electrical Connections 11

Step 11 - Adjust Factory-Installed Options 40

Step 12 - Install Accessories 41

SAFETY CONSIDERATIONS

Improper installation, adjustment, alteration, service, maintenance, or use can cause explosion, fire, electrical shock or other conditions which may cause personal injury or property damage. Consult a qualified installer, service agency, or your distributor or branch for information or assistance. The qualified installer or agency must use factory-authorized kits or accessories when modifying this product. Refer to the individual instructions packaged with the kits or accessories when installing.

Follow all safety codes. Wear safety glasses and work gloves. Use quenching cloths for brazing operations and have a fire extinguisher available. Read these instructions thoroughly and follow all warnings or cautions attached to the unit. Consult local building codes and appropriate national electrical codes (in USA, ANSI/NFPA70, National Electrical Code (NEC); in Canada, CSA C22.1) for special requirements.

It is important to recognize safety information. This is the safety-alert symbol ⚠. When you see this symbol on the unit and in instructions or manuals, be alert to the potential for personal injury.

Understand the signal words DANGER, WARNING, CAUTION, and NOTE. These words are used with the safety-alert symbol. DANGER identifies the most serious hazards which **will** result in severe personal injury or death. WARNING signifies hazards which **could** result in personal injury or death. CAUTION is used to identify unsafe practices, which **may** result in minor personal injury or product and property damage. NOTE is used to highlight suggestions which **will** result in enhanced installation, reliability, or operation.

⚠ WARNING

ELECTRICAL SHOCK HAZARD

Failure to follow this warning could cause personal injury or death.

Before performing service or maintenance operations on unit, always turn off main power switch to unit and install lockout tag. Unit may have more than one power switch.

⚠ WARNING

UNIT OPERATION AND SAFETY HAZARD

Failure to follow this warning could cause personal injury, death and/or equipment damage.

Puron® (R-410A) refrigerant systems operate at higher pressures than standard R-22 systems. Do not use R-22 service equipment or components on Puron refrigerant equipment.

⚠ WARNING

PERSONAL INJURY AND ENVIRONMENTAL HAZARD

Failure to follow this warning could cause personal injury or death.

Relieve pressure and recover all refrigerant before system repair or final unit disposal.

Wear safety glasses and gloves when handling refrigerants. Keep torches and other ignition sources away from refrigerants and oils.

⚠ CAUTION

CUT HAZARD

Failure to follow this caution may result in personal injury.

Sheet metal parts may have sharp edges or burrs. Use care and wear appropriate protective clothing, safety glasses and gloves when handling parts and servicing heat pump units.

NOTES:

1. DIMENSIONS ARE IN INCHES, DIMENSIONS IN [ ] ARE IN MILLIMETERS.
2. CENTER OF GRAVITY
3. DIRECTION OF AIR FLOW

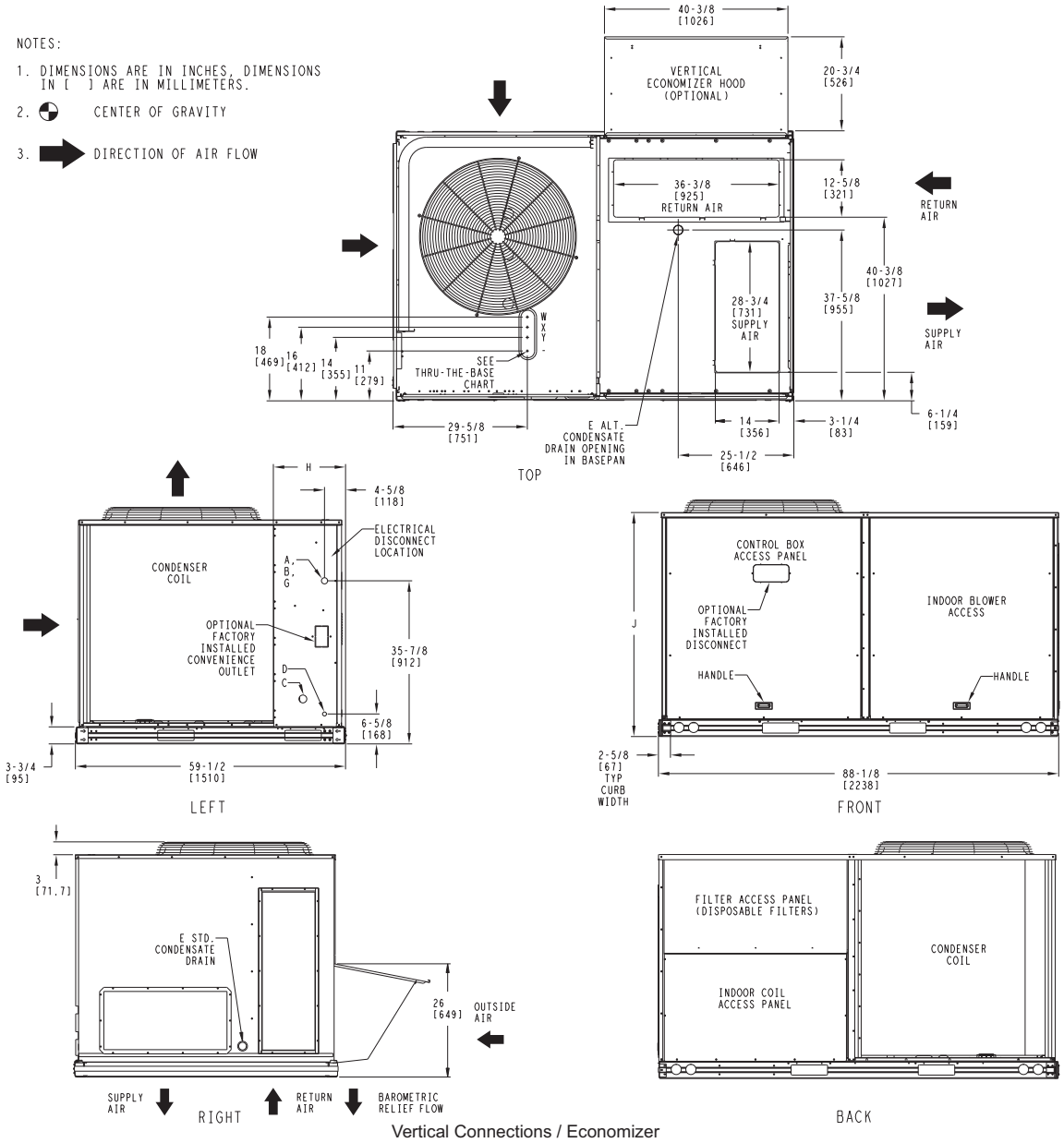

Vertical Connections / Economizer

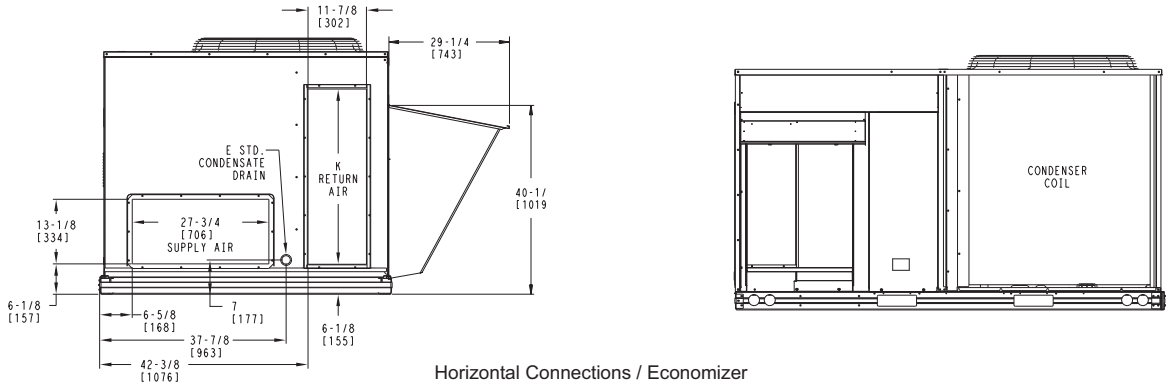

Horizontal Connections / Economizer

	CONNECTION SIZES
A	1 3/8" [35] DIA FIELD POWER SUPPLY HOLE
B	2 1/2" [64] DIA POWER SUPPLY KNOCKOUT
C	1 3/4" [51] DIA GAUGE ACCESS PLUG
D	7/8" [22] DIA FIELD CONTROL WIRING HOLE
E	3/4"-14 NPT CONDENSATE DRAIN
G	2" [51] DIA POWER SUPPLY KNOCK-OUT

THRU-THE-BASE CHART THESE HOLES REQUIRED FOR USE CRBTMPWR002A01			
	THREADED CONDUIT SIZE	WIRE USE	REQ'D HOLE SIZES (MAX.)
W	1/2"	ACC.	7/8" (22.2)
X	1/2"	24V	7/8" (22.2)
Y	1 1/4" (002)	POWER	1 3/4" (44.4)
	FOR "THRU-THE-BASEPAN" FACTORY OPTION, FITTINGS FOR ONLY X & Y ARE PROVIDED		

UNIT	H	J	K
50TCQD12	15 7/8 [403]	49 3/8 [1253]	35 5/8 [905]

C09556

Fig. 1 - Unit Dimensional Drawing – 12 Size Unit

UNIT	STD. UNIT WEIGHT*		CORNER WEIGHT (A)		CORNER WEIGHT (B)		CORNER WEIGHT (C)		CORNER WEIGHT (D)		C.G.		
	LBS.	KG.	LBS.	KG.	LBS.	KG.	LBS.	KG.	LBS.	KG.	X	Y	Z
50TCQD12	1050	476	284	129	201	91	234	106	331	150	36 1/2 [927]	32 [813]	23 1/2 [597]

* STANDARD UNIT WEIGHT IS WITHOUT ELECTRIC HEAT AND WITHOUT PACKAGING.
FOR OPTIONS AND ACCESSORIES REFER TO THE PRODUCT DATA CATALOG.

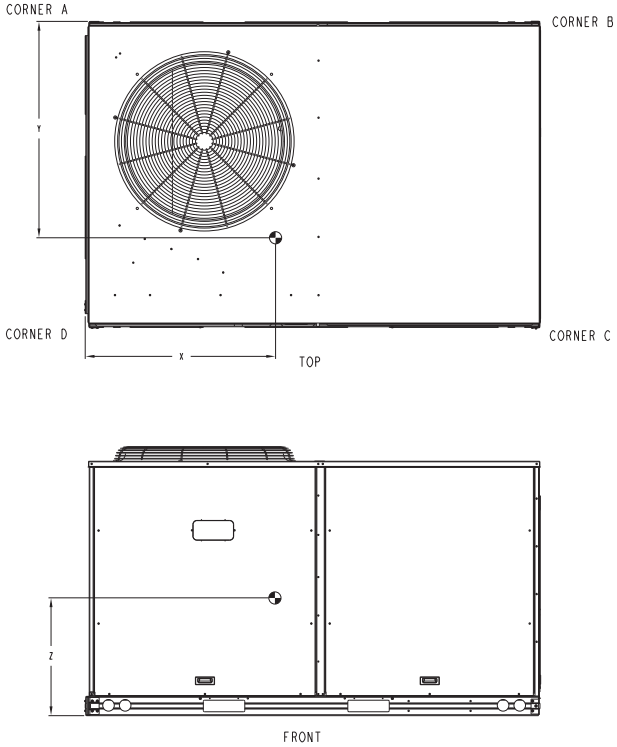

C09557

Fig. 1 - Unit Dimensional Drawing – 12 Size Unit (cont.)

INSTALLATION

Jobsite Survey

Complete the following checks before installation.

1. Consult local building codes and the NEC (National Electrical Code) ANSI/NFPA 70 for special installation requirements.
2. Determine unit location (from project plans) or select unit location.
3. Check for possible overhead obstructions which may interfere with unit lifting or rigging.

Step 1 — Plan for Unit Location

Select a location for the unit and its support system (curb or other) that provides for the minimum clearances required for safety. This includes the clearance to combustible surfaces, unit performance and service access below, around and above unit as specified in unit drawings. See Fig. 2.

NOTE: Consider also the effect of adjacent units.

Unit may be installed directly on wood flooring or on Class A, B, or C roof-covering material when roof curb is used

Do not install unit in an indoor location. Do not locate air inlets near exhaust vents or other sources of contaminated air.

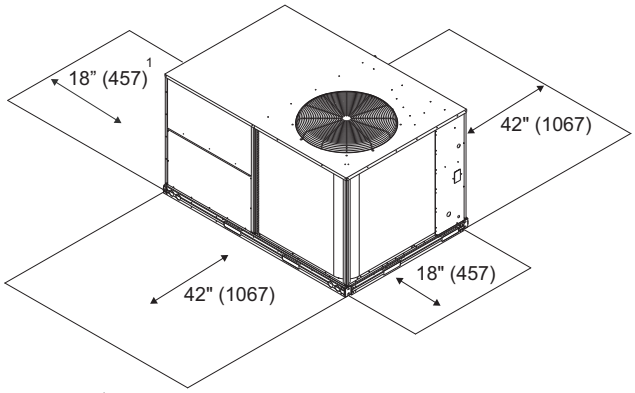

[1] Required bottom condensate drain connection.
Otherwise, 36" (914mm) for condensate connection.

C09565

Fig. 2 - Service Clearance Dimensional Drawing

Although unit is weatherproof, avoid locations that permit water from higher level runoff and overhangs to fall onto the unit.

Select a unit mounting system that provides adequate height to allow for removal and disposal of frost and ice that will form durring the heating-defrost mode as well as allow installation of condensate trap per requirements. Refer to Step 9 — Install External Condensate Trap and Line – for required trap dimensions.

Roof mount —

Check building codes for weight distribution requirements. Unit operating weight is shown in Table 1.

Step 2 — Plan for Sequence of Unit Installation

The support method used for this unit will dictate different sequences for the steps of unit installation. For example, on curb-mounted units, some accessories must be installed on the unit before the unit is placed on the curb. Review the following for recommended sequences for installation steps.

Curb-mounted installation —

Install curb

Install field-fabricated ductwork inside curb

Install accessory thru-base service connection package (affects curb and unit) (refer to accessory installation instructions for details)

Prepare bottom condensate drain connection to suit planned condensate line routing (refer to Step 9 for details)

Rig and place unit

Install outdoor air hood

Install condensate line trap and piping

Make electrical connections

Install other accessories

Pad-mounted installation —

Prepare pad and unit supports

Check and tighten the bottom condensate drain connection plug

Rig and place unit

Convert unit to side duct connection arrangement

Install field-fabricated ductwork at unit duct openings

Install outdoor air hood

Install condensate line trap and piping

Make electrical connections

Install other accessories

Frame-mounted installation —

Frame-mounted applications generally follow the sequence for a curb installation. Adapt as required to suit specific installation plan.

Step 3 — Inspect unit

Inspect unit for transportation damage. File any claim with transportation agency.

Confirm before installation of unit that voltage, amperage and circuit protection requirements listed on unit data plate agree with power supply provided.

Step 4 — Provide Unit Support

Roof Curb Mount —

Accessory roof curb details and dimensions are shown in Fig. 3. Assemble and install accessory roof curb in accordance with instructions shipped with the curb.

NOTE: The gasketing of the unit to the roof curb is critical for a watertight seal. Install gasket supplied with the roof curb as shown in Fig. 3. Improperly applied gasket can also result in air leaks and poor unit performance.

Curb should be level. This is necessary for unit drain to function properly. Unit leveling tolerances are show in Fig. 4. Refer to Accessory Roof Curb Installation Instructions for additional information as required.

Install insulation, cant strips, roofing felt, and counter flashing as shown. *Ductwork must be attached to curb and not to the unit. The accessory thru-the-base power package must be installed before the unit is set on the roof curb.*

If electric and control wiring is to be routed through the basepan, attach the accessory thru-the-base service connections to the basepan in accordance with the accessory installation instructions.

Slab Mount (Horizontal Units Only) —

Provide a level concrete slab that extends a minimum of 6 in. (150 mm) beyond unit cabinet. Install a gravel apron in front of condenser coil air inlet to prevent grass and foliage from obstructing airflow.

NOTE: Horizontal units may be installed on a roof curb if required.

Alternate Unit Support (In Lieu of Curb or Slab Mount) —

A non-combustible sleeper rail can be used in the unit curb support area. If sleeper rails cannot be used, support the long sides of the unit with a minimum of 3 equally spaced 4-in. x 4-in. (102 mm x 102 mm) pads on each side.

Table 1 – Operating Weights

50TCQD	UNITS LB (KG)
Component	D12
Base Unit	1050 (476)
Economizer	
Vertical	80 (36)
Horizontal	105 (48)
Powered Outlet	32 (15)
Curb	
14 – in/356 mm	143 (65)
24 – in/610 mm	153 (69)

ROOFCURB ACCESSORY	A	UNIT SIZE
CRRFCURB003A01	1' - 2" [356]	50TCQD12
CRRFCURB004A01	2' - 0" [610]	

NOTES:
1. ROOFCURB ACCESSORY IS SHIPPED DISASSEMBLED.
2. INSULATED PANELS: 1" THK. POLYURETHANE FOAM, 1-3/4 # DENSITY.
3. DIMENSIONS IN [ ] ARE IN MILLIMETERS.
4. ROOFCURB: 18 GAGE STEEL ON 14" CURB, AND 16 GAGE STEEL ON 24" CURB.
5. ATTACH DUCTWORK TO CURB. (FLANGES OF DUCT REST ON CURB)
6. SERVICE CLEARANCE 4' ON EACH SIDE.
7. ▨ DIRECTION OF AIR FLOW.
8. CONNECTOR PACKAGES CRBTMPWR001A01 AND 2A01 ARE FOR THRU-THE-CURB TYPE CONNECTIONS. PACKAGES CRBTMPWR003A01 AND 4A01 ARE FOR THE THRU-THE-BOTTOM TYPE CONNECTIONS.

CONNECTOR PKG. ACC.	B	C	D ALT DRAIN HOLE	POWER	CONTROL	ACCESSORY PWR
CRBTMPWR001A01 CRBTMPWR002A01	2'-8 7/16" [827]	1'-10 15/16" [583]	1 3/4" [44.5]	3/4" [19] NPT 1 1/4" [31.7]	1/2" [12.7] NPT	1/2" [12.7] NPT
CRBTMPWR003A01	↓	↓	↓	3/4" [19] NPT	↓	↓
CRBTMPWR004A01	↓	↓	↓	1 1/4" [31.7]	↓	↓

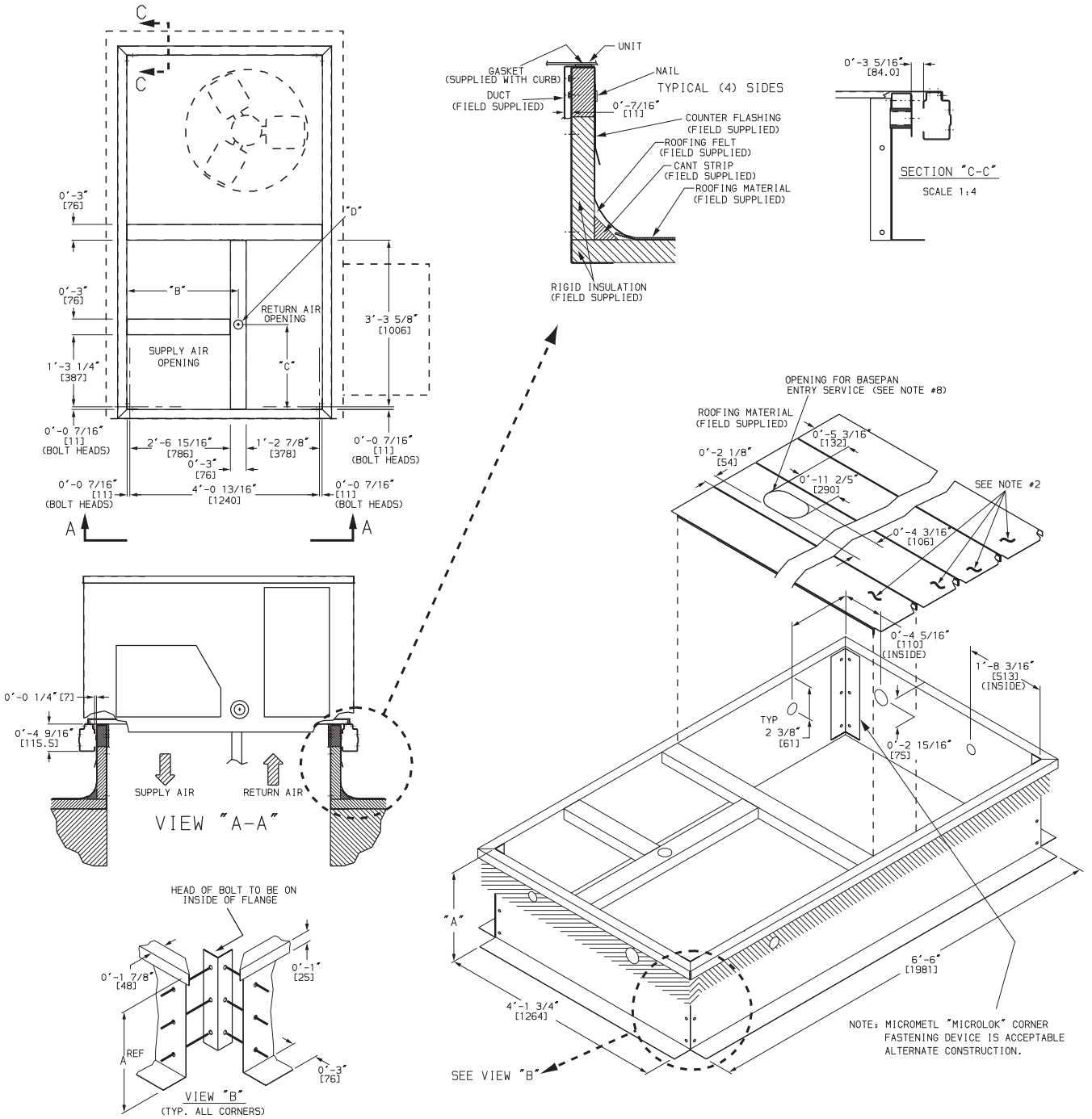

Fig. 3 - Roof Curb Details

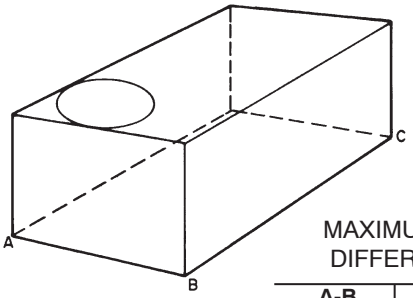

MAXIMUM ALLOWABLE DIFFERENCE IN. (MM)

A-B	B-C	A-C
0.5” (13)	1.0” (25)	1.0” (25)

C06110

Fig. 4 - Unit Leveling Tolerances

Step 5 — Field Fabricate Ductwork

Cabinet return-air static pressure (a negative condition) shall not exceed 0.35 in. wg (87 Pa) with economizer or 0.45 in. wg (112 Pa) without economizer.

For vertical ducted applications, secure all ducts to roof curb and building structure. *Do not connect ductwork to unit.*

Insulate and weatherproof all external ductwork, joints, and roof openings with counter flashing and mastic in accordance with applicable codes.

Ducts passing through unconditioned spaces must be insulated and covered with a vapor barrier.

If a plenum return is used on a vertical unit, the return should be ducted through the roof deck to comply with applicable fire codes.

For units with accessory electric heaters: Horizontal applications require a minimum clearance to combustible surfaces of 1-in (25 mm) from duct for first 12-in (305 mm) away from unit. Vertical applications do not require a minimum clearance is not required around ductwork.

Step 6 — Rig and Place Unit

Keep unit upright and do not drop. Spreader bars are not required if top crating is left on unit. Rollers may be used to move unit across a roof. Level by using unit frame as a reference. See Table 1 and Fig. 5 for additional information.

Lifting holes are provided in base rails as shown in Fig. 5. Refer to rigging instructions on unit.

⚠ CAUTION

UNIT DAMAGE HAZARD

Failure to follow this caution may result in equipment damage.

All panels must be in place when rigging. Unit is not designed for handling by fork truck.

Before setting the unit onto the curb, recheck gasketing on curb.

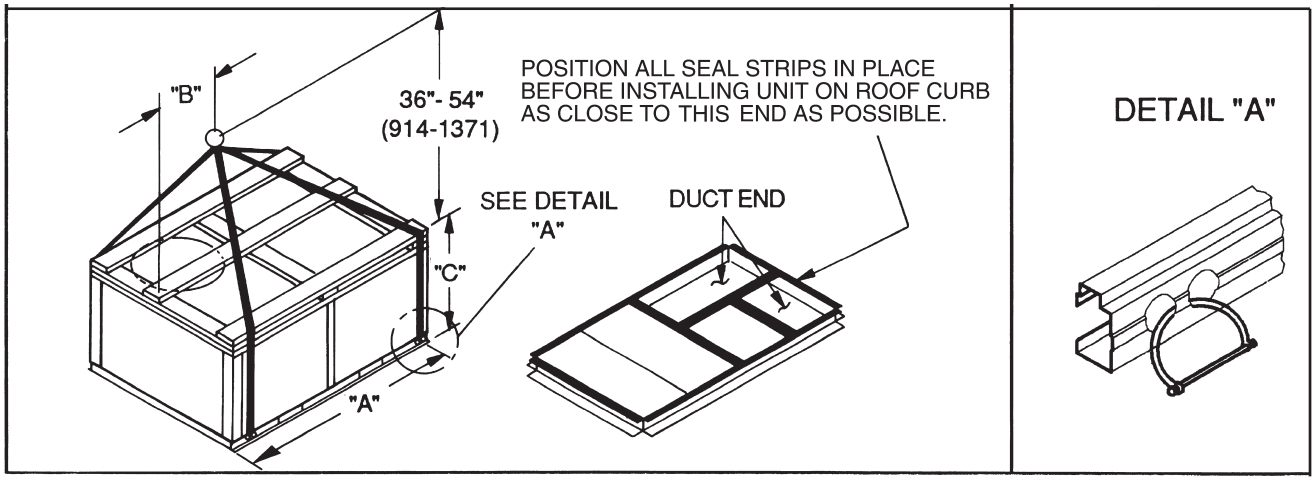

C06005

UNIT	MAX WEIGHT		DIMENSIONS					
			A		B		C	
	LB	KG	IN	MM	IN	MM	IN	MM
50TCQD12	1695	770	88.0	2235	36.5	925	49.5	1255

NOTES:

1. Dimensions in ( ) are in millimeters.
2. Hook rigging shackles through holes in base rail, as shown in detail “A.” Holes in base rails are centered around the unit center of gravity. Use wooden top to prevent rigging straps from damaging unit.

Fig. 5 - Rigging Details

Positioning on Curb —

Position unit on roof curb so that the following clearances are maintained: $^1/_4$ in. (6.4 mm) clearance between the roof curb and the base rail inside the front and rear, 0.0 in. clearance between the roof curb and the base rail inside on the duct end of the unit. This will result in the distance between the roof curb and the base rail inside on the condenser end of the unit being approximately equal to Fig. 3, section C-C.

Although unit is weatherproof, guard against water from higher level runoff and overhangs.

After unit is in position, remove the compressor access panel. Holding the blocking between compressors with one hand, cut the strapping. Carefully remove the blocking without damaging tubing, wiring, or controls. Remove the strapping and replace the access panel.

Remove all shipping materials and top skid. Recycle or dispose of all shipping materials.

Step 7 — Convert to Horizontal and Connect Ductwork (when required)

Unit is shipped in the vertical duct configuration. Unit *without* factory-installed economizer or return air smoke detector option may be field-converted to horizontal ducted configuration. To convert to horizontal configuration, remove screws from side duct opening covers and remove covers. Using the same screws, install covers on vertical duct openings with the insulation-side down. Seals around duct openings must be tight. See Fig. 6.

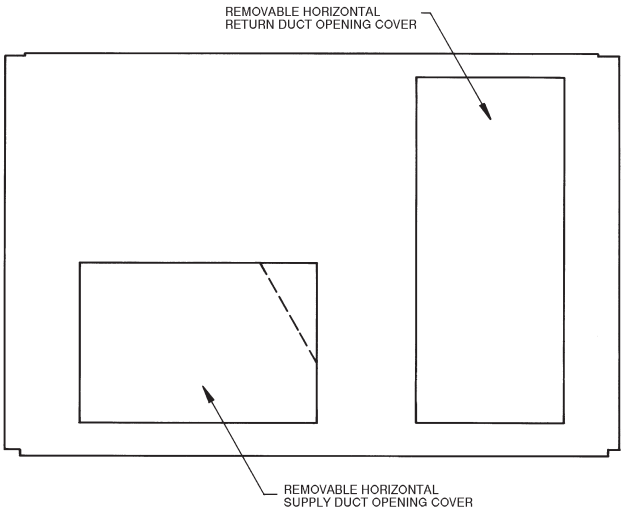

Fig. 6 - Horizontal Conversion Panels

Field-supplied flanges should be attached to horizontal duct openings and all ductwork should be secured to the flanges. Insulate and weatherproof all external ductwork, joints, and roof or building openings with counter flashing and mastic in accordance with applicable codes.

Do not cover or obscure visibility to the unit's informative data plate when insulating horizontal ductwork.

Step 8 — Install Outside Air Hood

Economizer Hood Removal and Setup - Factory Option

1. The hood is shipped in knock-down form and located in the return air compartment. It is attached to the economizer using two plastic tie-wraps.
2. To gain access to the hood, remove the filter access panel. (See Fig. 7.)
3. Locate and cut the (2) plastic tie-wraps, being careful to not damage any wiring. (See Fig. 8.)
4. Carefully lift the hood assembly through the filter access opening and assemble per the steps outlined in *Economizer Hood and Two–Position Hood* on page 10.

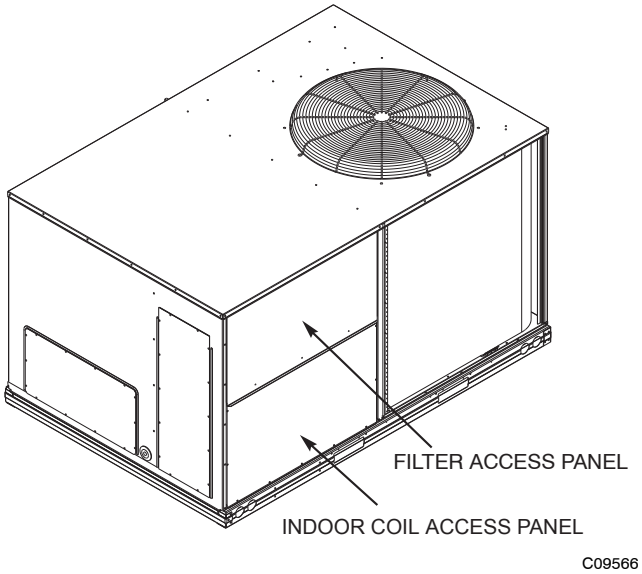

Fig. 7 - Typical Access Panel Locations

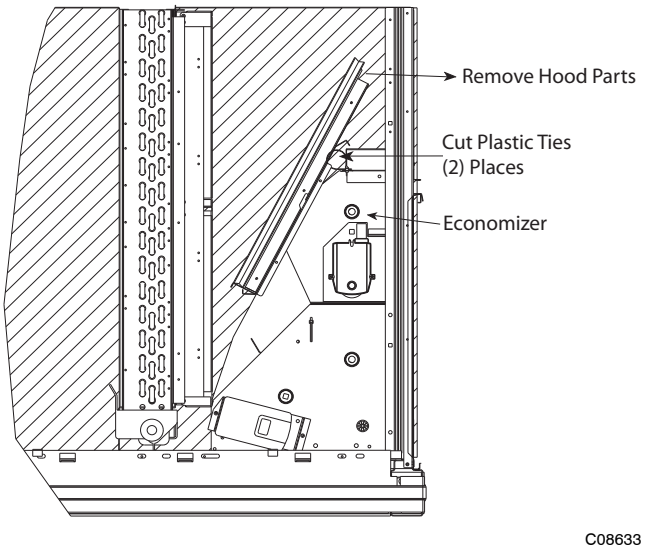

Fig. 8 - Economizer Wiring

Two Position Damper Hood Removal and Setup - Factory Option

1. The hood is shipped in knock-down form and assembled to a metal support tray using plastic stretch wrap. Located in the return air compartment, the assembly's metal tray is attached to the basepan and also attached to the damper using two plastic tie-wraps.
2. To gain access to the hood, remove the filter access panel. (See Fig. 7.)
3. Locate the (2) screws holding the metal tray to the basepan and remove. Locate and cut the (2) plastic tie-wraps securing the assembly to the damper. (See Fig. 9.) Be careful to not damage any wiring or cut tie-wraps securing any wiring.
4. Carefully lift the hood assembly (with metal tray) through the filter access opening and assemble per the steps outlined in *Economizer Hood and Two–Position Hood* on page 10.

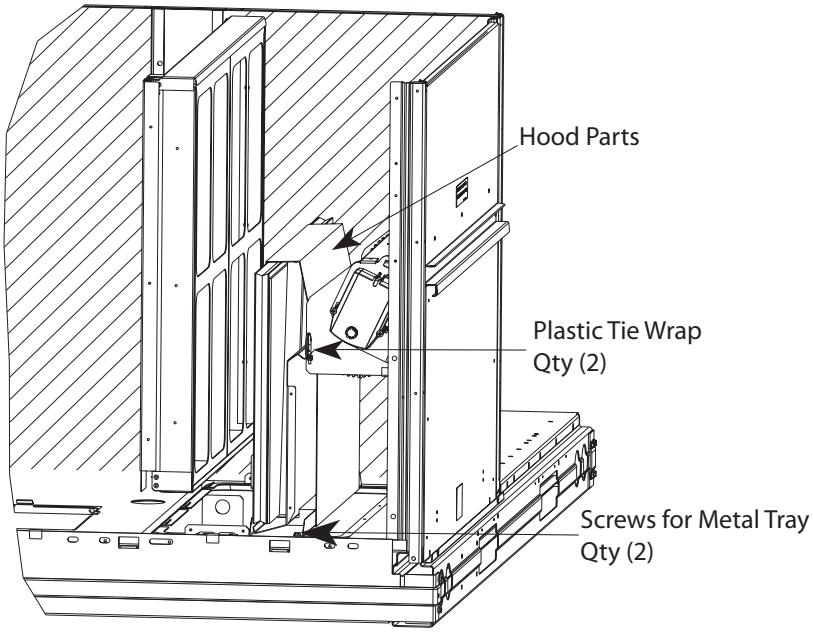

C08639

Fig. 9 - Damper Assembly

Economizer Hood and Two-Position Hood—

NOTE: If the power exhaust accessory is to be installed on the unit, the hood shipped with the unit will not be used and must be discarded. Save the aluminum filter for use in the power exhaust hood assembly.

1. The indoor coil access panel will be used as the top of the hood. Remove the screws along the sides and bottom of the indoor coil access panel. See Fig. 10.

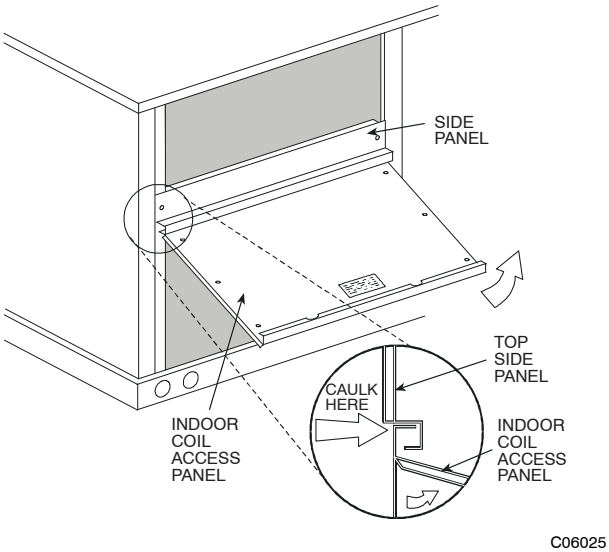

Fig. 10 - Indoor Coil Access Panel Relocation

2. Swing out indoor coil access panel and insert the hood sides under the panel (hood top). Use the screws provided to attach the hood sides to the hood top. Use screws provided to attach the hood sides to the unit. See Fig. 11.

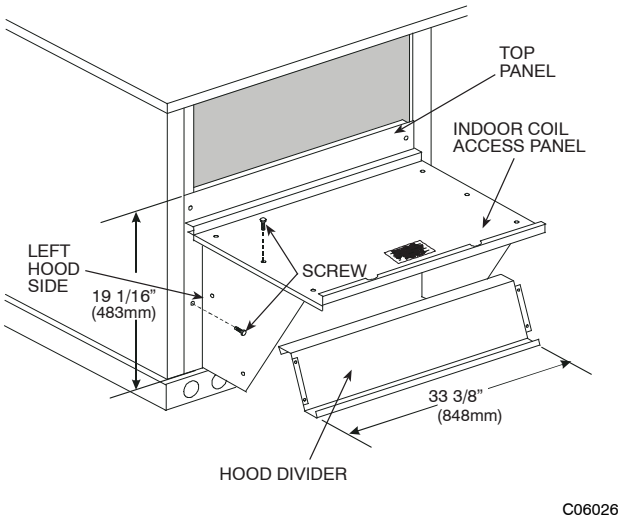

Fig. 11 - Economizer Hood Construction

3. Remove the shipping tape holding the economizer barometric relief damper in place.
4. Insert the hood divider between the hood sides. See Fig. 11 and 12. Secure hood divider with 2 screws on each hood side. The hood divider is also used as the bottom filter rack for the aluminum filter.
5. Open the filter clips which are located underneath the hood top. Insert the aluminum filter into the bottom filter rack (hood divider). Push the filter into position past the open filter clips. Close the filter clips to lock the filter into place. See Fig. 12.

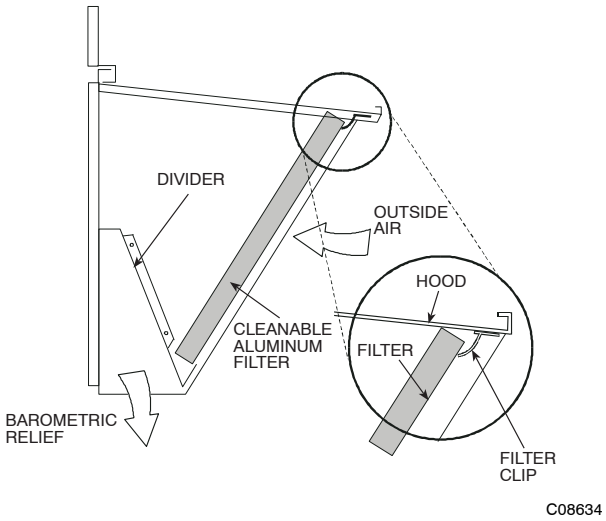

Fig. 12 - Economizer Filter Installation

6. Caulk the ends of the joint between the unit top panel and the hood top.
7. Replace the filter access panel.

Step 9 — Install External Condensate Trap and Line

The unit has one $^3/_4$-in. condensate drain connection on the end of the condensate pan and an alternate connection on the bottom. See Fig. 13. Unit airflow configuration does not determine which drain connection to use. Either drain connection can be used with vertical or horizontal applications.

When using the standard side drain connection, ensure the red plug in the alternate bottom connection is tight. Do this before setting the unit in place. The red drain pan can be tightened with a $^1/_2$-in. square socket drive extension.

To use the alternate bottom drain connection, remove the red drain plug from the bottom connection (use a $^1/_2$-in. square socket drive extension) and install it in the side drain connection.

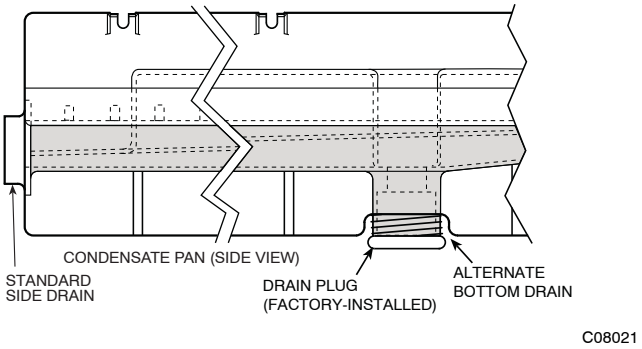

Fig. 13 - Condensate Drain Pan (Side View)

The piping for the condensate drain and external trap can be completed after the unit is in place. See Fig. 14.

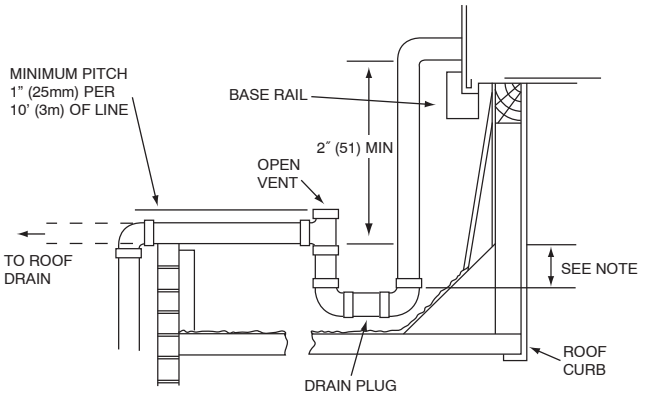

NOTE: Trap should be deep enough to offset maximum unit static difference. A 4" (102) trap is recommended

C08022

Fig. 14 - Condensate Drain Piping Details

All units must have an external trap for condensate drainage. Install a trap at least 4-in. (102 mm) deep and protect against freeze-up. If drain line is installed downstream from the external trap, pitch the line away from the unit at 1-in. per 10 ft (25 mm in 3 m) of run. Do not use a pipe size smaller than the unit connection ($^3/_4$-in.).

Step 10 — Make Electrical Connections

⚠ WARNING

ELECTRICAL SHOCK HAZARD

Failure to follow this warning could result in personal injury or death.

Do not use gas piping as an electrical ground. Unit cabinet must have an uninterrupted, unbroken electrical ground to minimize the possibility of personal injury if an electrical fault should occur. This ground may consist of electrical wire connected to unit ground lug in control compartment, or conduit approved for electrical ground when installed in accordance with NEC (National Electrical Code); ANSI/NFPA 70, latest edition (in Canada, Canadian Electrical Code CSA [Canadian Standards Association] C22.1), and local electrical codes.

NOTE: Check all factory and field electrical connections for tightness. Field-supplied wiring shall conform with the limitations of 63°F (33°C) rise.

Field Power Supply —

If equipped with optional Powered Convenience Outlet: The power source leads to the convenience outlet's transformer primary are not factory connected. Installer must connect these leads according to required operation of the convenience outlet. If an always-energized convenience outlet operation is desired, connect the source leads to the line side of the unit-mounted disconnect. (Check with local codes to ensure this method is acceptable in your area.) If a de-energize via unit disconnect switch operation of the convenience outlet is desired, connect the source leads to the load side of the unit disconnect. On a unit without a unit-mounted disconnect, connect the source leads to compressor contactor C and indoor fan contactor IFC pressure lugs with unit field power leads.

All units except 208/230-v units are factory wired for the voltage shown on the nameplate. *If the 208/230-v unit is to be connected to a 208-v power supply, the control transformer must be rewired by moving the black wire with the $^1/_4$-in. female spade connector from the 230-v connection and moving it to the 200-v $^1/_4$-in. male terminal on the primary side of the transformer.* Refer to unit label diagram for additional information. Field power wires will be connected line-side pressure lugs on the power terminal block or at factory-installed option non-fused disconnect.

Field power wires are connected to the unit at line-side pressure lugs on compressor contactor C and indoor fan contactor IFC or terminal board (see wiring diagram label for control box component arrangement) or at factory-installed option non-fused disconnect switch. Max wire size is #2 AWG (copper only). (See Fig. 16)

NOTE: TEST LEADS - Unit may be equipped with short leads (pigtails) on the field line connection points on contactor C or optional disconnect switch. These leads are for factory run-test purposes only; remove and discard before connecting field power wires to unit connection points. Make field power connections directly to line connection pressure lugs only.

⚠ WARNING

FIRE HAZARD

Failure to follow this warning could result in intermittent operation or performance satisfaction.

Do not connect aluminum wire between disconnect switch and furnace. Use only copper wire.
(See Fig. 15.)

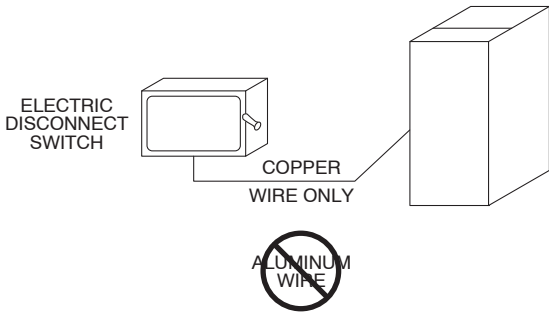

A93033

Fig. 15 - Disconnect Switch and Unit

Units Without Factory-Installed Disconnect —

When installing units, provide a disconnect switch per NEC (National Electrical Code) of adequate size. Disconnect sizing data is provided on the unit informative plate. Locate on unit cabinet or within sight of the unit per national or local codes. Do not cover unit informative plate if mounting the disconnect on the unit cabinet.

Units with Factory-Installed Disconnect —

The factory-installed option disconnect switch is located in a weatherproof enclosure located under the main control box. The manual switch handle is accessible through an opening in the access panel. Discard the factory test leads (see Fig. 16).

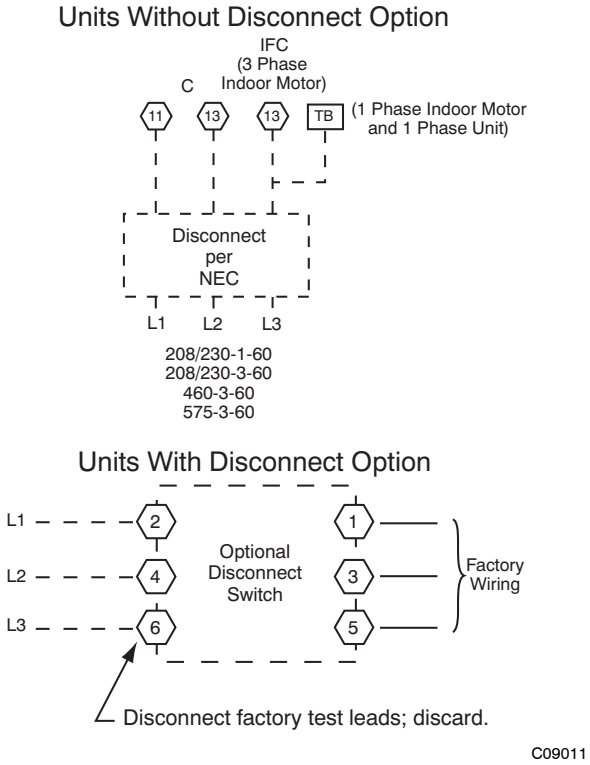

Fig. 16 - Power Wiring Connections

All units -

All field wiring must comply with NEC and all local codes. Size wire based on MCA (Minimum Circuit Amps) on the unit informative plate. See Fig. 16 and the unit label diagram for power wiring connections to the unit power terminal blocks and equipment ground. Maximum wire size is #2 ga AWG per pole.

Provide a ground-fault and short-circuit over-current protection device (fuse or breaker) per NEC Article 440 (or local codes). Refer to unit informative data plate for MOCP (Maximum Over-current Protection) device size.

All field wiring must comply with the NEC and local requirements.

Convenience Outlets —

⚠ WARNING

ELECTRICAL OPERATION HAZARD

Failure to follow this warning could result in personal injury or death.

Units with convenience outlet circuits may use multiple disconnects. Check convenience outlet for power status before opening unit for service. Locate its disconnect switch, if appropriate, and open it. Tag-out this switch, if necessary.

Two types of convenience outlets are offered on 50TCQD models: Non-powered and unit-powered. Both types provide a 125-volt GFCI (ground-fault circuit-interrupter) duplex receptacle rated at 15-A behind a hinged waterproof access cover, located on the end panel of the unit. See Fig. 17.

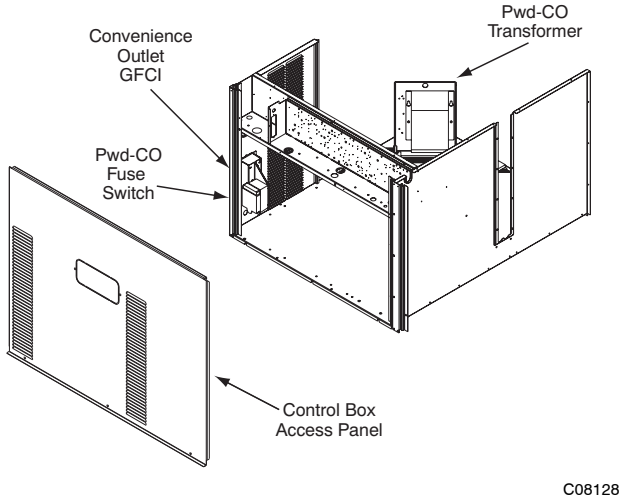

Fig. 17 - Convenience Outlet Location

Installing Weatherproof Cover –

A weatherproof while-in-use cover for the factory-installed convenience outlets is now required by UL standards. This cover cannot be factory-mounted due its depth; it must be installed at unit installation. For shipment, the convenience outlet is covered with a blank cover plate.

The weatherproof cover kit is shipped in the unit's control box. The kit includes the hinged cover, a backing plate and gasket.

DISCONNECT ALL POWER TO UNIT AND CONVENIENCE OUTLET.

Remove the blank cover plate at the convenience outlet; discard the blank cover.

Loosen the two screws at the GFCI duplex outlet, until approximately $^1/_2$-in (13 mm) under screw heads are exposed. Press the gasket over the screw heads. Slip the backing plate over the screw heads at the keyhole slots and align with the gasket; tighten the two screws until snug (do not over-tighten).

Mount the weatherproof cover to the backing plate as shown in Fig. 18. Remove two slot fillers in the bottom of the cover to permit service tool cords to exit the cover. Check for full closing and latching.

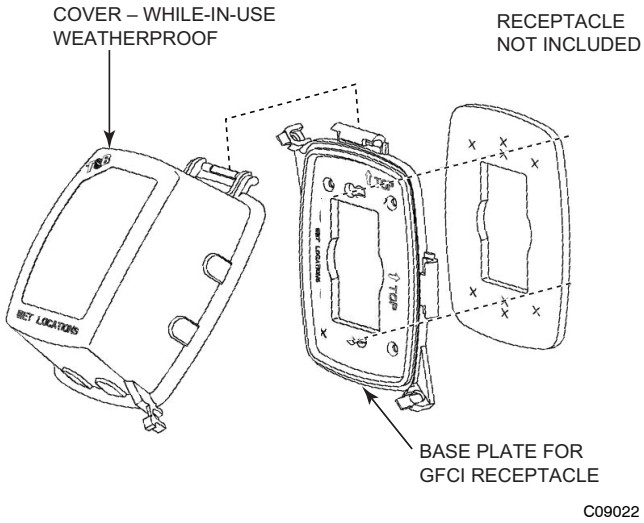

Fig. 18 - Weatherproof Cover Installation

Non-powered type: This type requires the field installation of a general-purpose 125-volt 15-A circuit powered from a source elsewhere in the building. Observe national and local codes when selecting wire size, fuse or breaker requirements and disconnect switch size and location. Route 125-v power supply conductors into the bottom of the utility box containing the duplex receptacle.

Unit-powered type: A unit-mounted transformer is factory-installed to stepdown the main power supply voltage to the unit to 115-v at the duplex receptacle. This option also includes a manual switch with fuse, located in a utility box and mounted on a bracket behind the convenience outlet; access is through the unit's control box access panel. See Fig. 17.

The primary leads to the convenience outlet transformer are not factory-connected. Selection of primary power source is a customer-option. If local codes permit, the transformer primary leads can be connected at the line-side terminals on the unit-mounted non-fused disconnect or HACR breaker switch; this will provide service power to the unit when the unit disconnect switch or HACR switch is open. Other connection methods will result in the convenience outlet circuit being de-energized when the unit disconnect or HACR switch is open. See Fig. 19.

Duty Cycle: the unit-powered convenience outlet has a duty cycle limitation. The transformer is intended to provide power on an intermittent basis for service tools, lamps, etc; it is not intended to provide 15-amps loading for continuous duty loads (such as electric heaters for overnight use). Observe a 50% limit on circuit loading above 8-amps (i.e., limit loads exceeding 8-amps to 30 minutes of operation every hour).

Test the GFCI receptacle by pressing the TEST button on the face of the receptacle to trip and open the receptacle. Check for proper grounding wires and power line phasing if the GFCI receptacle does not trip as required. Press the RESET button to clear the tripped condition.

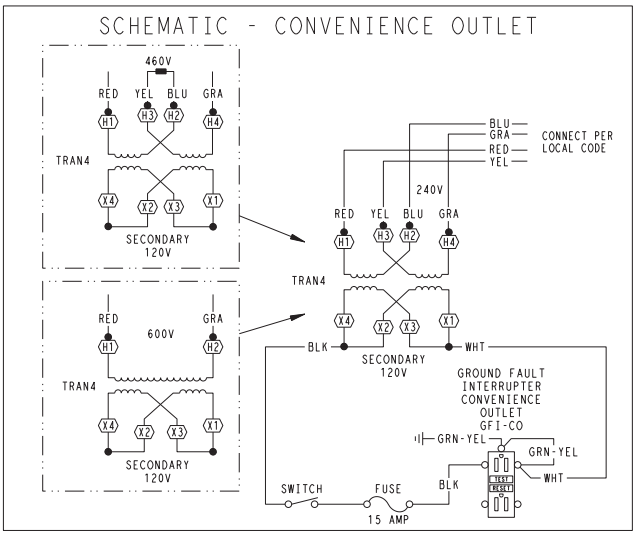

UNIT VOLTAGE	CONNECT AS	PRIMARY CONNECTIONS	TRANSFORMER TERMINALS
208, 230	240	L1: RED +YEL L2: BLU + GRA	H1 + H3 H2 + H4
460	480	L1: RED Splice BLU + YEL L2: GRA	H1 H2 + H3 H4
575	600	L1: RED L2: GRA	H1 H2

Fig. 19 - Powered Convenience Outlet Wiring

Fuse on power type: The factory fuse is a Bussman "Fusetron" T-15, non-renewable screw-in (Edison base) type plug fuse.

Using unit-mounted convenience outlets: Units with unit-mounded convenience outlet circuits will often require that two disconnects be opened to de-energize all power to the unit. Treat all units as electrically energized until the convenience outlet power is also checked and de-energization is confirmed. Observe National Electrical Code Article 210, Branch Circuits, for use of convenience outlets.

Factory-Option Thru-Base Connections —

This service connection kit consists of a $^1/_2$-in electrical bulkhead connector and a $^3/_4$-in electrical bulkhead connector, all factory-installed in the embossed (raised) section of the unit basepan in the condenser section. The $^1/_2$-in bulkhead connector enables the low-voltage control wires to pass through the basepan. The $^3/_4$-in electrical bulkhead connector allows the high-voltage power wires to pass through the basepan. See Fig. 20.

Check tightness of connector lock nuts before connecting electrical conduits.

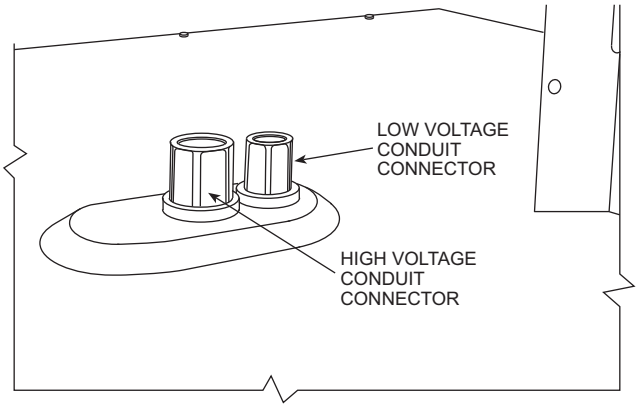

C08637

Fig. 20 - Thru-Base Connection Fittings

Field-supplied and field-installed liquidtight conduit connectors and conduit may be attached to the connectors on the basepan. Pull correctly rated high voltage and low voltage through appropriate conduits. Connect the power conduit to the internal disconnect (if unit is so equipped) or to the external disconnect (through unit side panel). A hole must be field cut in the main control box bottom on the left side so the 24-v control connections can be made. Connect the control power conduit to the unit control box at this hole.

Units without Thru-Base Connections —

1. Install power wiring conduit through side panel openings. Install conduit between disconnect and control box.
2. Install power lines to terminal connections as shown in Fig. 16.

All Units —

Voltage to compressor terminals during operation must be within voltage range indicated on unit nameplate. See Table 10. On 3-phase units, voltages between phases must be balanced within 2% and the current within 10%. Use the formula shown in the legend for Table 10, Note 2 (see page 37) to determine the percent of voltage imbalance. Operation on improper line voltage or excessive phase imbalance constitutes abuse and may cause damage to electrical components. Such operation would invalidate any applicable Carrier warranty.

Field Control Wiring —

The 50TCQD unit requires an external temperature control device. This device can be a thermostat (field-supplied) or a PremierLink controller (available as factory-installed option or as field-installed accessory, for use on a Carrier Comfort Network or as a stand alone control) or the RTU-MP Controller for Building Management Systems using non-CCN protocols (RTU-MP is available as a factory-installed option only).

Thermostat —

Install a Carrier-approved accessory 2 stage Cooling/Heating thermostat according to installation instructions included with the accessory. The 50TCQ models do not require a thermostat with an O function to control the reversing valve operation. If using an electronic thermostat, configure it for "non-heat pump" operation. Locate the thermostat accessory on a solid wall in the conditioned space to sense average temperature in accordance with the thermostat installation instructions.

If the thermostat contains a logic circuit requiring 24-v power, use a thermostat cable or equivalent single leads of different colors with minimum of seven leads. If the thermostat does not require a 24-v source (no "C" connection required), use a thermostat cable or equivalent with minimum of six leads. Check the thermostat installation instructions for additional features which might require additional conductors in the cable.

For wire runs up to 50 ft. (15 m), use no. 18 AWG (American Wire Gage) insulated wire (35°C minimum). For 50 to 75 ft. (15 to 23 m), use no. 16 AWG insulated wire (35°C minimum). For over 75 ft. (23 m), use no. 14 AWG insulated wire (35°C minimum). All wire sizes larger than no. 18 AWG cannot be directly connected to the thermostat and will require a junction box and splice at the thermostat.

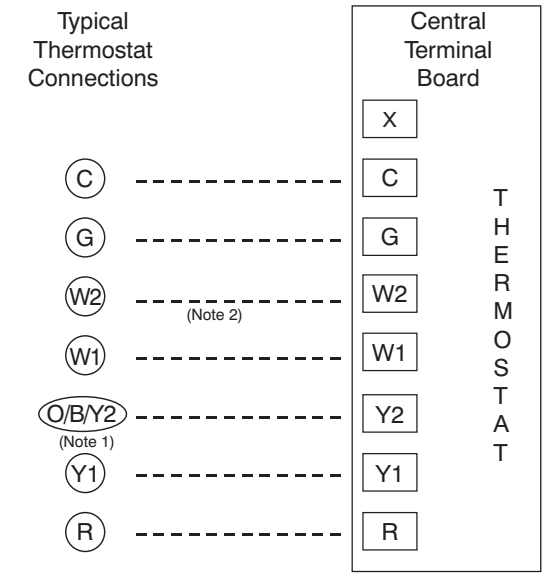

Note 1: Typical multi-function marking. Follow manufacturer's configuration instructions to select Y2. Do not configure for O output.

Note 2: W2 connection not required on units without electric heating.

- - - Field Wiring

C09012

Fig. 21 - Typical Low-Voltage Control Connections

Unit without thru-base connection kit —

Pass the thermostat control wires through the hole provided in the corner post; then feed the wires through the raceway built into the corner post to the control box. Pull the wires over to the terminal strip on the upper-left corner of the Central Terminal Board (CTB). See Fig. 22.

NOTE: If thru-the-bottom connections accessory is used, refer to the accessory installation instructions for information on routing power and control wiring.

Heat Anticipator Settings —

Set heat anticipator settings at 0.14 amp for the first stage and 0.14 amp for second-stage heating, when available.

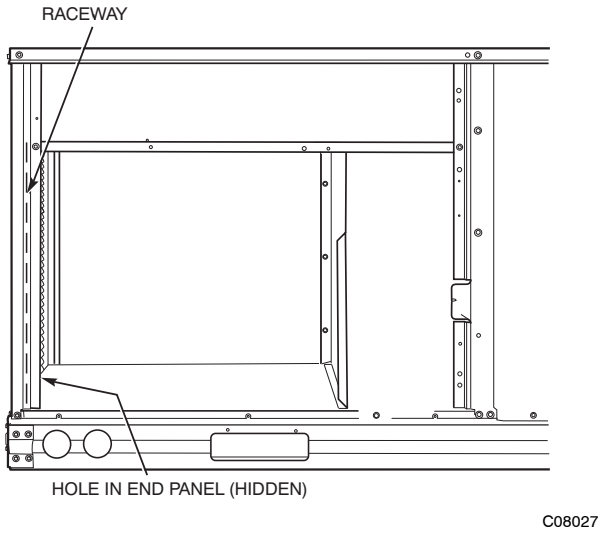

Fig. 22 - Field Control Wiring Raceway

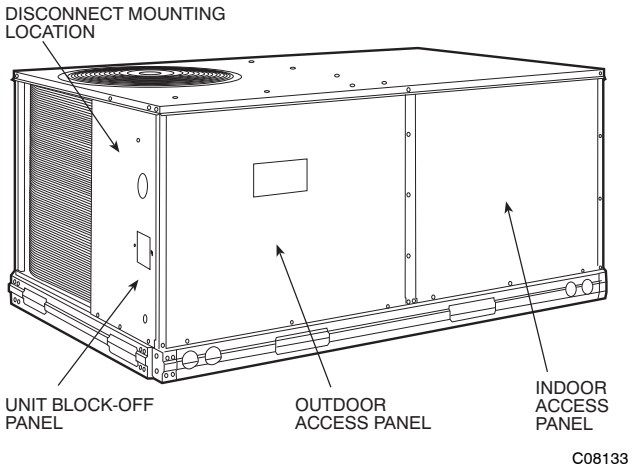

Fig. 23 - Typical Access Panel Location

Electric Heaters

50TCQ units may be equipped with field-installed accessory electric heaters. The heaters are modular in design, with heater frames holding open coil resistance wires strung through ceramic insulators, line-break limit switches and a control contactor. One or two heater modules may be used in a unit.

Heater modules are installed in the compartment below the indoor (supply) fan outlet. Access is through the indoor access panel. Heater modules slide into the compartment on tracks along the bottom of the heater opening. See Fig. 23, Fig. 24, and Fig. 25.

Not all available heater modules may be used in every unit. Use only those heater modules that are UL listed for use in a specific size unit. Refer to the label on the unit cabinet for the list of approved heaters.

Unit heaters are marked with Heater Model Numbers. But heaters are ordered as and shipped in cartons marked with a corresponding heater Sales Package part number. See Table 2 for correlation between heater Model Number and Sales Package part number.

NOTE: The value in position 9 of the part number differs between the sales package part number (value is 1 or 3) and a bare heater model number (value is 0).

Table 2 – Heater Model Number

Bare Heater Model Number	C	R	H	E	A	T	E	R	0	0	1	A	0	0
Heater Sales Package PNO Includes: **Bare Heater** **Carton and packing materials** **Installation sheet**	C	R	H	E	A	T	E	R	1	0	1	A	0	0

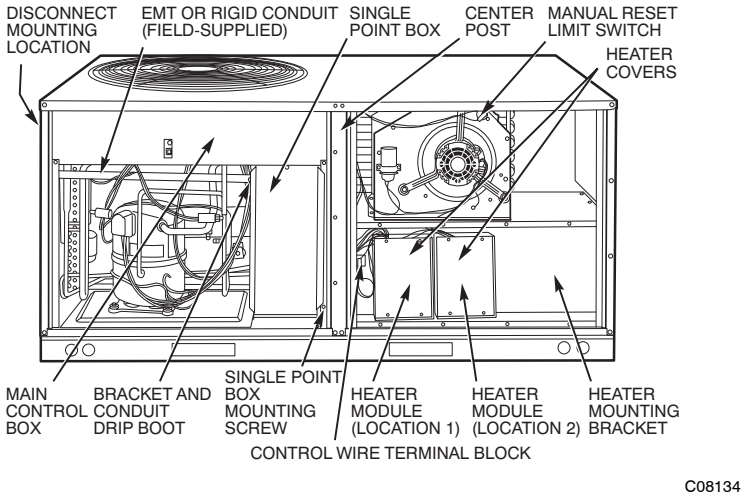

Fig. 23 - Typical Component Location

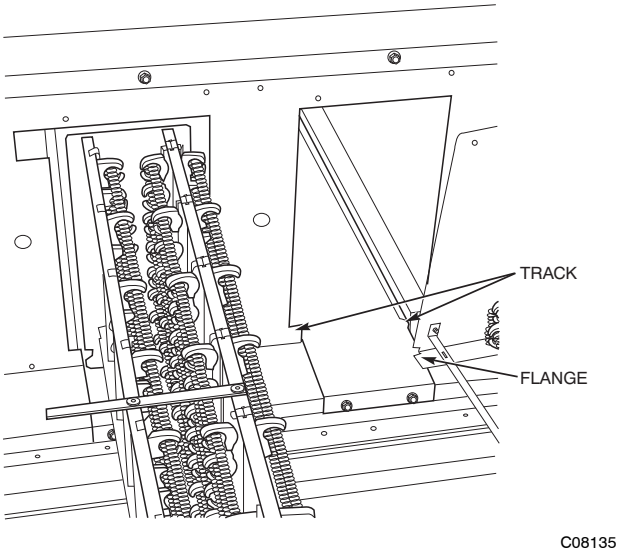

Fig. 25 - Typical Module Installation

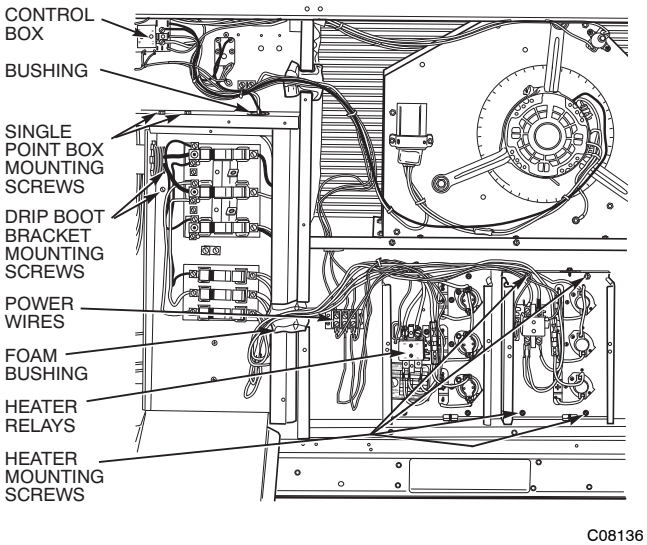

Fig. 26 - Typical Single Point Installation

Single Point Boxes and Supplementary Fuses — When the unit MOCP device value exceeds 60-A, unit-mounted supplementary fuses are required for each heater circuit. These fuses are included in accessory Single Point Boxes, with power distribution and fuse blocks. The single point box will be installed directly under the unit control box, just to the left of the partition separating the indoor section (with electric heaters) from the outdoor section. The Single Point Box has a hinged access cover. See Fig. 26. The Single Point Box also includes pigtails to complete the wiring between the Single Point Box and the unit's main control box terminals. Refer to the accessory heater and Single Point Box installation instructions for details on tap connections.

All fuses on 50TCQ units are 60-A. (Note that all heaters are qualified for use with a 60-A fuse, regardless of actual heater ampacity, so only 60-A fuses are necessary.)

Single Point Boxes without Fuses — Refer to accessory heater and Single Point Box installation instructions for details on tap connections.

Low-Voltage Control Connections — Run the low-voltage control leads from the heater module(s) - VIO and BRN (two of each if two modules are installed; identify for Module #1) - to the 4-pole terminal board TB4 located on the heater bulkhead to the left of Heater #1. Connect the VIO leads from Heater #1 and Heater #2 to terminal TB4-1. Connect the BRN leads to terminal TB4-3. See Fig. 27.

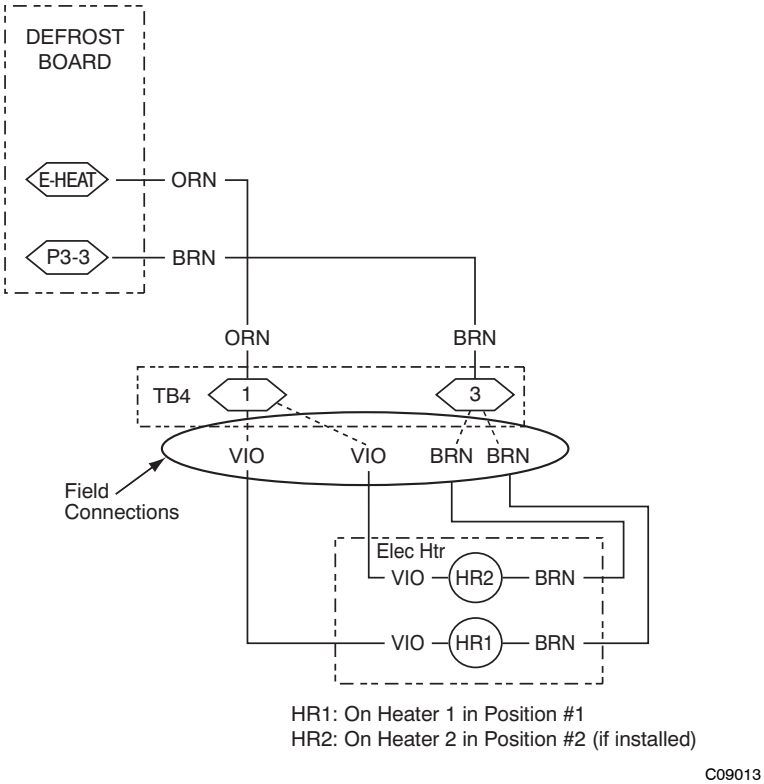

Fig. 27 - Accessory Electric Heater Control Connections

PremierLink™ (Factory-Option) —

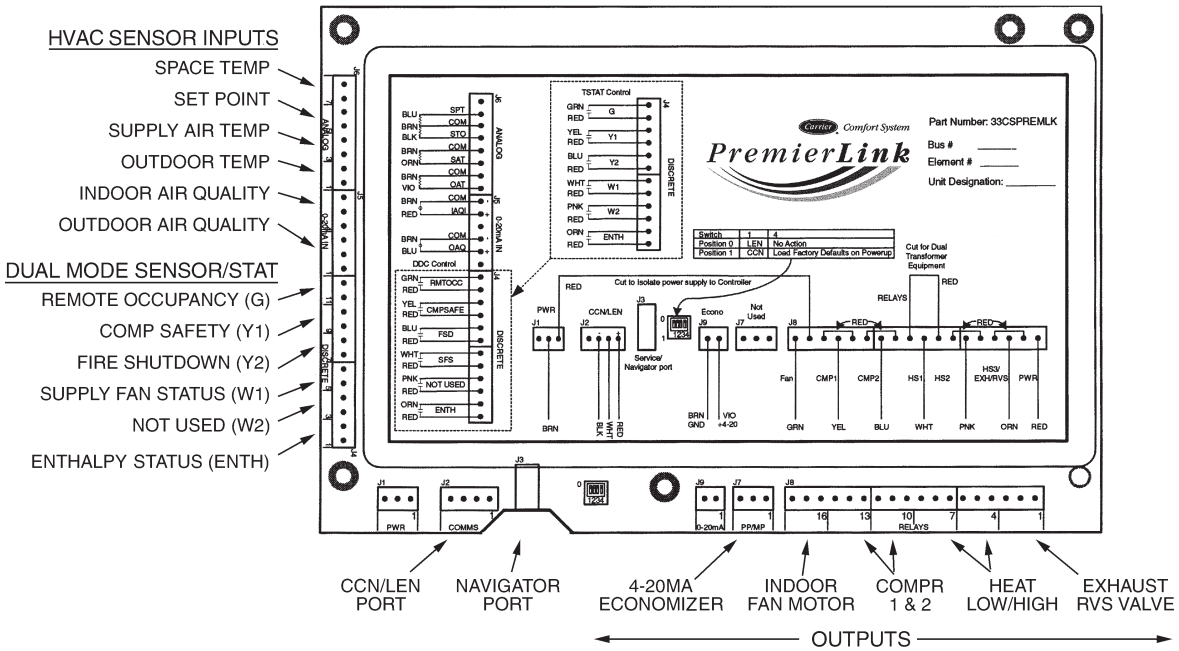

Fig. 28 - PremierLink Controller

The PremierLink controller (see Fig. 28) is compatible with Carrier Comfort Network® (CCN) devices. This control is designed to allow users the access and ability to change factory-defined settings, thus expanding the function of the standard unit control board. CCN service access tools include System Pilot (TM), Touch Pilot (TM) and Service Tool. (Standard tier display tools Navigator™ and Scrolling Marquee are not suitable for use with latest PremierLink controller (Version 2.x).)

The PremierLink control is factory-mounted in the 50TCQ unit's main control box to the left of the Central Terminal Board (CTB). Factory wiring is completed through harnesses connected to the CTB thermostat. Field connections are made at a 16-pole terminal block (TB1) located on the bottom shelf of the unit control box in front of the PremierLink controller. The factory-installed PremierLink control includes the supply-air temperature (SAT) sensor. The outdoor air temperature (OAT) sensor is included in the FIOP/accessory EconoMi$er™2 package.

The PremierLink controller requires the use of a Carrier electronic thermostat or a CCN connection for time broadcast to initiate its internal timeclock. This is necessary for broadcast of time of day functions (occupied/unoccupied).

NOTE: PremierLink controller is shipped in Sensor mode. To be used with a thermostat, the PremierLink controller must be configured to Thermostat mode. Refer to PremierLink Configuration instructions for Operating Mode.

Supply Air Temperature (SAT) Sensor — On FIOP-equipped 50TCQ unit, the unit is supplied with a supply-air temperature (SAT) sensor (33ZCSENSAT). This sensor is a tubular probe type, approx 6-inches (12.7 mm) in length. It is a nominal 10-k ohm thermistor.

The SAT is factory-wired. The SAT probe is wire-tied to the supply-air opening (on the horizontal opening end) in its shipping position. Remove the sensor for installation. Re-position the sensor in the flange of the supply-air opening or in the supply air duct (as required by local codes). Drill or punch a $^1/_2$-in. hole in the flange or duct. Use two field-supplied, self-drilling screws to secure the sensor probe in a horizontal orientation. See Fig. 29.

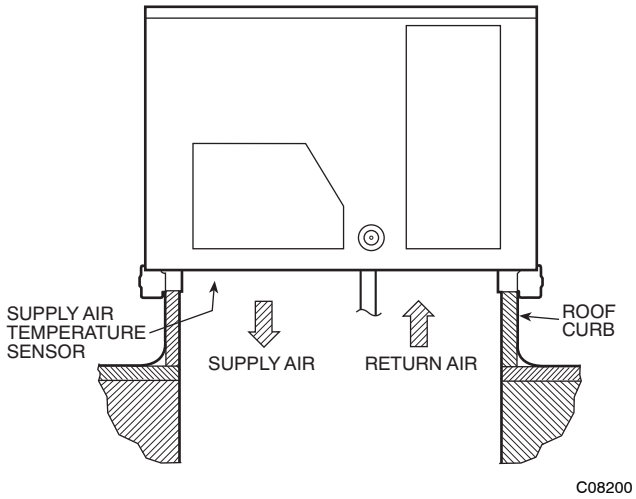

Fig. 29 - Typical Mounting Location for Supply Air Temperature (SAT) Sensor on Small Rooftop Units

NOTE: Refer to Form 33CS-58SI for complete PremierLink configuration, operating sequences and troubleshooting information. Have a copy of this manual available at unit start-up.

NOTE: The sensor must be mounted in the discharge airstream downstream of the cooling coil and any heating devices. Be sure the probe tip does not come in contact with any of the unit's heater surfaces.

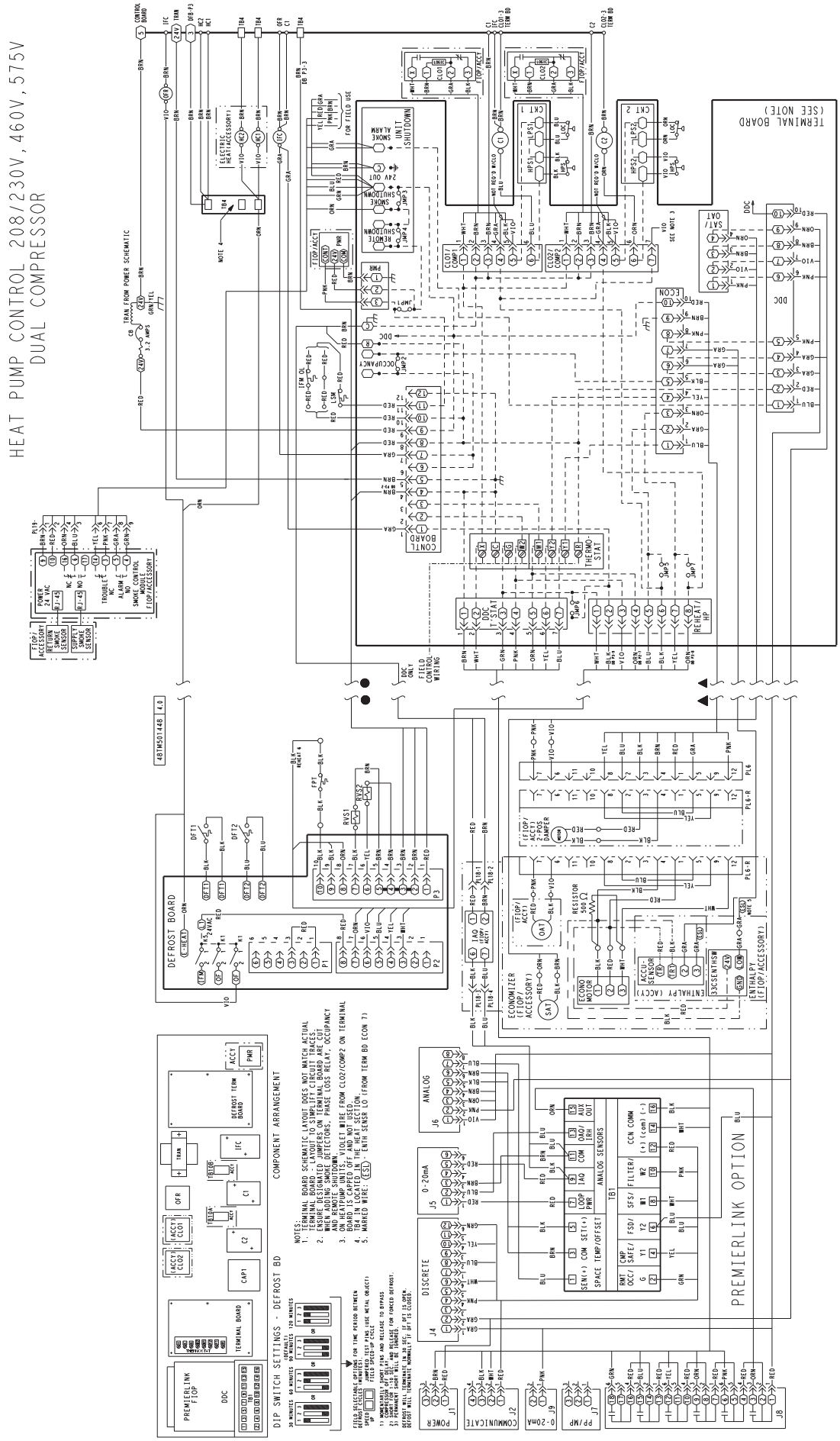

C09024

Fig. 30 - PremierLink Wiring Schematic

Outdoor Air Temperature (OAT) Sensor — The OAT is factory-mounted in the EconoMi$er2 (FIOP or accessory). It is a nominal 10k ohm thermistor attached to an eyelet mounting ring.

EconoMi$er2 — The PremierLink control is used with EconoMi$er2 (option or accessory) for outdoor air management. The damper position is controlled directly by the PremierLink control; EconoMi$er2 has no internal logic device.

Outdoor air management functions can be enhanced with field-installation of these accessory control devices:

Enthalpy control (outdoor air or differential sensors)

Space CO_2 sensor

Outdoor air CO_2 sensor

Refer to Table 3 for accessory part numbers.

Field connections — Field connections for accessory sensor and input devices are made at the 16-pole terminal block (TB1) located on the control box bottom shelf in front of the PremierLink control (See Fig. 30). Some input devices also require a 24-vac signal source; connect at CTB terminal R at "THERMOSTAT" connection strip for this signal source. See connections figures on following pages for field connection locations (and for continued connections at the PremierLink board inputs).

Table 4 provides a summary of field connections for units equipped with Space Sensor. Table 5 provides a summary of field connections for units equipped with Space Thermostat.

Space Sensors - The PremierLink controller is factory-shipped configured for Space Sensor Mode. A Carrier T-55 or T-56 space sensor must be used. T-55 space temperature sensor provides a signal of space temperature to the PremierLink control. T-56 provides same space temperature signal plus it allows for adjustment of space temperature setpoints from the face of the sensor by the occupants.

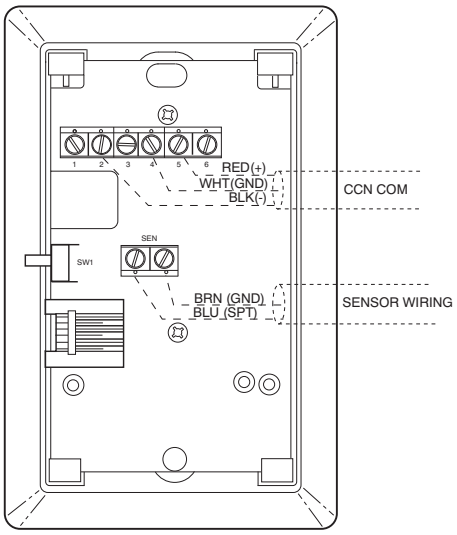

C08201

Fig. 31 - T-55 Space Temperature Sensor Wiring

Connect T-55 - See Fig. 31 for typical T-55 internal connections. Connect the T-55 SEN terminals to TB1 terminals 1 and 3 (see Fig. 32).

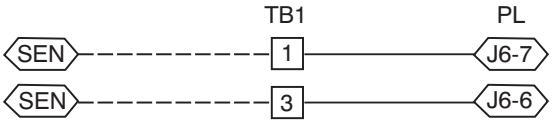

C08212

Fig. 32 - PremierLink T-55 Sensor

Connect T-56 - See Fig. 33 for T-56 internal connections. Install a jumper between SEN and SET terminals as illustrated. Connect T-56 terminals to TB1 terminals 1, 3 and 5 (see Fig. 34).

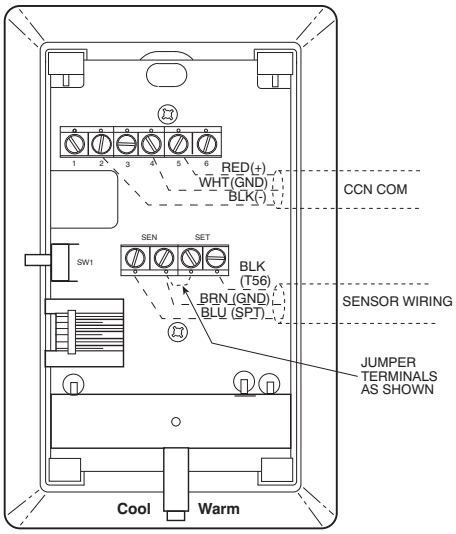

C08202

Fig. 33 - T-56 Internal Connections

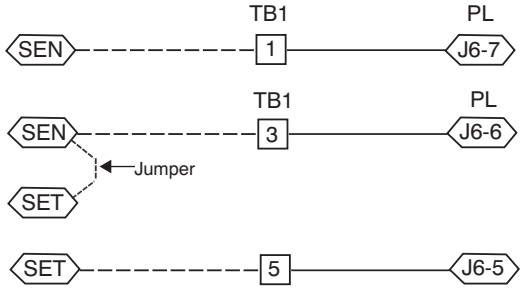

C08213

Fig. 34 - PremierLink T-56 Sensor

Connect Thermostat — A 7-wire thermostat connection requires a 24-v power source and a common connection. Use the R and C terminals on the CTB's THERMOSTAT connection strip for these. Connect the thermostat's Y1, Y2, W1, W2 and G terminals to PremierLink TB1 as shown in Fig. 35.

If the 50TCQ unit is equipped with factory-installed smoke detector(s), disconnect the factory BLU lead at TB1-6 (Y2) before connecting the thermostat. Identify the BLU lead originating at CTB-DDC-1; disconnect at TB1-6 and tape off. Confirm that the second BLU lead at TB1-6 remains connected to PremierLink J4-8.

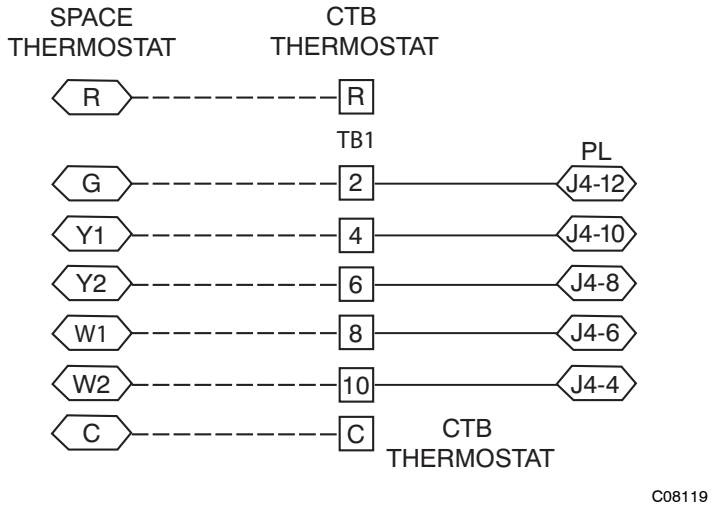

Fig. 35 - Space Thermostat Connections

Table 3 – PremierLink Sensor Usage

APPLICATION	OUTDOOR AIR TEMPERATURE SENSOR	RETURN AIR TEMPERATURE SENSOR	OUTDOOR AIR ENTHALPY SENSOR	RETURN AIR ENTHALPY SENSOR
Differential Dry Bulb Temperature with PremierLink (PremierLink requires 4–20 mA Actuator)	Included – CRTEMPSN001A00	Required – 33ZCT55SPT or equivalent	–	–
Single Enthalpy with PremierLink (PremierLink requires 4–20mA Actuator)	Included – Not Used	–	Requires – 33CSENTHSW	–
Differential Enthalpy with PremierLink (PremierLink requires 4–20mA Actuator)	Included – Not Used	–	Requires – 33CSENTHSW or equivalent	Requires – 33CSENTSEN or equivalent

NOTES:
CO_2 Sensors (Optional):
33ZCSENCO2 – Room sensor (adjustable). Aspirator box is required for duct mounting of the sensor.
33ZCASPCO2 – Aspirator box used for duct–mounted CO_2 room sensor.
33ZCT55CO2 – Space temperature and CO_2 room sensor with override.
33ZCT56CO2 – Space temperature and CO_2 room sensor with override and setpoint.

Table 4 – Space Sensor Mode

TB1 TERMINAL	FIELD CONNECTION	INPUT SIGNAL
1	T55–SEN/T56–SEN	Analog (10k thermistor)
2	RMTOCC	Discrete, 24VAC
3	T55–SEN/T56–SEN	Analog (10k thermistor)
4	CMPSAFE	Discrete, 24VAC
5	T56–SET	Analog (10k thermistor)
6	FSD	Discrete, 24VAC
7	LOOP–PWR	Analog, 24VDC
8	SPS	Discrete, 24VAC
9	IAQ–SEN	Analog, 4–20mA
10	FILTER	Discrete, 24VAC
11	IAQ–COM/OAQ–COM/RH–COM	Analog, 4–20mA
12	CCN + (RED)	Digital, , 5VDC
13	OAQ–SEN/RH–SEN	Analog, 4–20mA
14	CCN Gnd (WHT)	Digital, 5VDC
15	AUX OUT(Power Exhaust)	(Output)Discrete 24VAC
16	CCN – (BLK)	Digital, 5VDC

LEGEND:

T55 – Space Temperature Sensor
T56 – Space Temperature Sensor
CCN – Carrier Comfort Network (communication bus)
CMPSAFE – Compressor Safety
FILTER – Dirty Filter Switch
FSD – Fire Shutdown
IAQ – Indoor Air Quality (CO_2)
OAQ – Outdoor Air Quality (CO_2)
RH – Relative Humidity
SFS – Supply Fan Status

Table 5 – Thermostat Mode

TB1 TERMINAL	FIELD CONNECTION	INPUT SIGNAL
1	RAT SEN	Analog (10k thermistor)
2	G	Discrete, 24VAC
3	RAT SEN	Analog (10k thermistor)
4	Y1	Discrete, 24VAC
5		
6	Y2	Discrete, 24VAC
7	LOOP–PWR	Analog, 24VDC
8	W1	Discrete, 24VAC
9	IAQ–SEN	Analog, 4–20mA
10	W2	Discrete, 24VAC
11	IAQ–COM/OAQ–COM/RH–COM	Analog, 4–20mA
12	CCN + (RED)	Digital, 5VDC
13	OAQ–SEN/RH–SEN	Analog, 4–20mA
14	CCN Gnd (WHT)	Digital, 5VDC
15	AUX OUT (Power Exhaust)	(Output) Discrete 24VAC
16	CCN – (BLK)	Digital, 5VDC

LEGEND:

CCN – Carrier Comfort Network (communication bus)
G – Thermostat Fan
IAQ – Indoor Air Quality (CO_2)
OAQ – Outdoor Air Quality (CO_2)
RAT – Return Air Temperature
RH – Relative Humidity
W1 – Thermostat Heat Stage 1
W2 – Thermostat Heat Stage 2
Y1 – Thermostat Cool Stage 1
Y2 – Thermostat Cool Stage 2

If the 50TCQ unit has an economizer system and free-cooling operation is required, a sensor representing Return Air Temperature must also be connected (field-supplied and installed). This sensor may be a T-55 Space Sensor (see Fig. 31) installed in the space or in the return duct, or it may be sensor PNO 33ZCSENSAT, installed in the return duct. Connect this sensor to TB1-1 and TB1-3 per Fig. 32.

Configure the unit for Thermostat Mode — Connect to the CCN bus using a CCN service tool and navigate to PremierLink Configuration screen for Operating Mode. Default setting is Sensor Mode (value 1). Change the value to 0 to reconfigure the controller for Thermostat Mode.

When the PremierLink is configured for Thermostat Mode, these functions are not available: Fire Shutdown (FSD), Remote Occupied (RMTOCC), Compressor Safety (CMPSAFE), Supply Fan Status (SFS), and Filter Pressure Switch (FILTER).

Economizer controls —

Outdoor Air Enthalpy Control (PNO 33CSENTHSW) -

The enthalpy control (33CSENTHSW) is available as a field-installed accessory to be used with the EconoMi$er2 damper system. The outdoor air enthalpy sensor is part of the enthalpy control. (The separate field-installed accessory return air enthalpy sensor (33CSENTSEN) is required for differential enthalpy control. See Fig. 36.)

Locate the enthalpy control in the economizer next to the Actuator Motor. Locate two GRA leads in the factory harness and connect the gray lead labeled "ESL" to the terminal labeled "LOW". See Fig. 36. Connect the enthalpy control power input terminals to economizer actuator power leads RED (connect to 24V) and BLK (connect to GND).

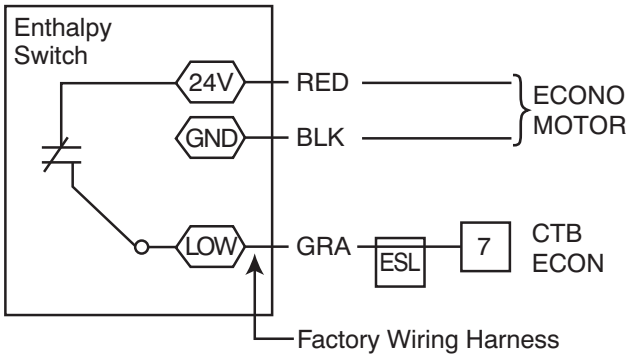

Fig. 36 - Enthalpy Switch (33CSENTHSW) Connections

The outdoor enthalpy changeover setpoint is set at the enthalpy controller.

Differential Enthalpy Control — Differential enthalpy control is provided by sensing and comparing the outside air and return air enthalpy conditions. Install the outdoor air enthalpy control as described above. Add and install a return air enthalpy sensor.

Return Air Enthalpy Sensor — Mount the return-air enthalpy sensor (33CSENTSEN) in the return-air section of the economizer. The return air sensor is wired to the enthalpy controller (33CSENTHSW). See Fig. 37.

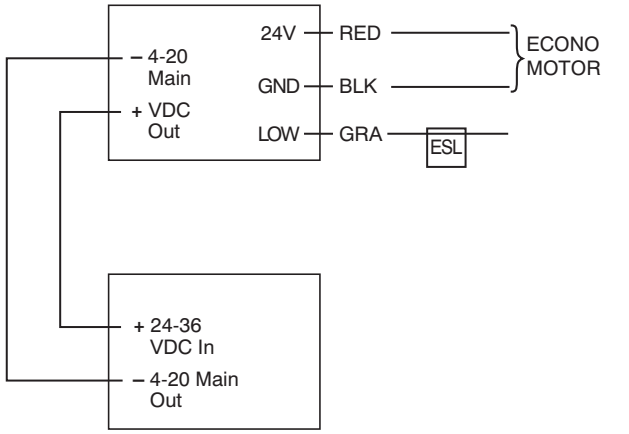

Fig. 37 - Outside and Return Air Enthalpy Sensor Wiring

To wire the return air enthalpy sensor, perform the following:

1. Use a 2-conductor, 18 or 20 AWG, twisted pair cable to connect the return air enthalpy sensor to the enthalpy controller.
2. Connect the field-supplied RED wire to (+) spade connector on the return air enthalpy sensor and the (+) terminal on the enthalpy controller. Connect the BLK wire to (-) spade connector on the return air enthalpy sensor and the (-) terminal on the enthalpy controller.

Indoor Air Quality (CO_2 sensor) — The indoor air quality sensor accessory monitors space carbon dioxide (CO_2) levels. This information is used to monitor IAQ levels. Several types of sensors are available, for wall mounting in the space or in return duct, with and without LCD display, and in combination with space temperature sensors. Sensors use infrared technology to measure the levels of CO_2 present in the space air.

The CO_2 sensors are all factory set for a range of 0 to 2000 ppm and a linear mA output of 4 to 20. Refer to the instructions supplied with the CO_2 sensor for electrical requirements and terminal locations. See Fig. 38 for typical CO_2 sensor wiring schematic.

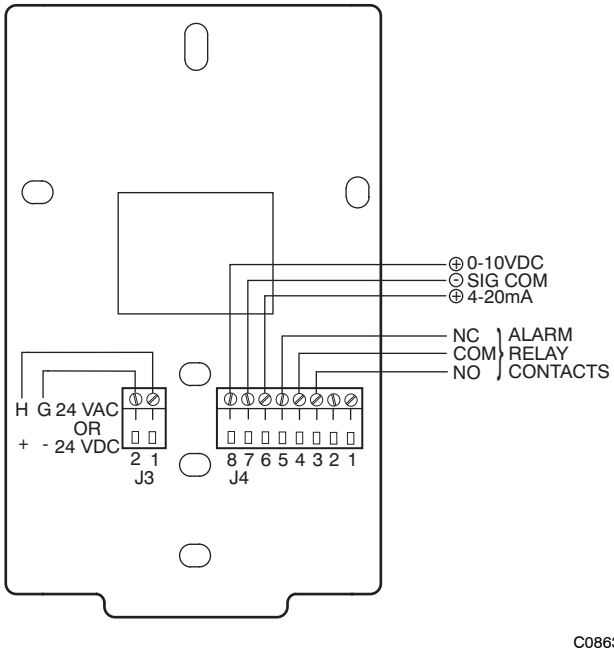

Fig. 38 - Indoor/Outdoor Air Quality (CO_2) Sensor (33ZCSENCO2) - Typical Wiring Diagram

To accurately monitor the quality of the air in the conditioned air space, locate the sensor near a return-air grille (if present) so it senses the concentration of CO_2 leaving the space. The sensor should be mounted in a location to avoid direct breath contact.

Do not mount the IAQ sensor in drafty areas such as near supply ducts, open windows, fans, or over heat sources. Allow at least 3 ft (0.9 m) between the sensor and any corner. Avoid mounting the sensor where it is influenced by the supply air; the sensor gives inaccurate readings if the supply air is blown directly onto the sensor or if the supply air does not have a chance to mix with the room air before it is drawn into the return airstream.

Wiring the Indoor Air Quality Sensor —

For each sensor, use two 2-conductor 18 AWG (American Wire Gage) twisted-pair cables (unshielded) to connect the separate isolated 24 vac power source to the sensor and to connect the sensor to the control board terminals.

To connect the sensor to the control, identify the positive (4 to 20 mA) and ground (SIG COM) terminals on the sensor. See Fig. 38. Connect the 4-20 mA terminal to terminal TB1-9 and connect the SIG COM terminal to terminal TB1-11. See Fig. 39.

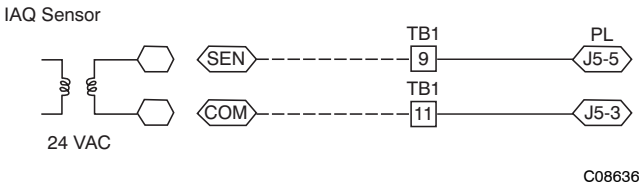

Fig. 39 - Indoor CO_2 Sensor (33ZCSENCO2) Connections

Refer to Form 33CS-58SI, PremierLink Installation, Start-up, and Configuration Instructions, for detailed configuration information

Outdoor Air Quality Sensor (PNO 33ZCSENCO2 plus weatherproof enclosure) — The outdoor air CO_2 sensor is designed to monitor carbon dioxide (CO_2) levels in the outside ventilation air and interface with the ventilation damper in an HVAC system. The OAQ sensor is packaged with an outdoor cover. See Fig. 40. The outdoor air CO_2 sensor must be located in the economizer outside air hood.

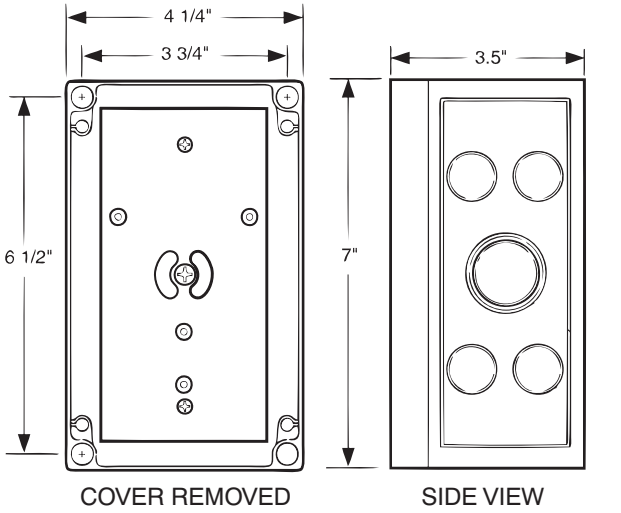

Fig. 40 - Outdoor Air Quality Sensor Cover

Wiring the Outdoor Air CO_2 Sensor — A dedicated power supply is required for this sensor. A two-wire cable is required to wire the dedicated power supply for the sensor. The two wires should be connected to the power supply and terminals 1 and 2.

To connect the sensor to the control, identify the positive (4 to 20 mA) and ground (SIG COM) terminals on the OAQ sensor. See Fig. 37. Connect the 4 to 20 mA terminal to the TB1-13 terminal of the 50TCQ. Connect the SIG COM terminal to the TB1-11 terminal of the 50TCQD. See Fig. 41.

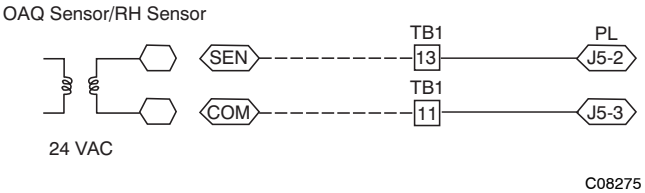

Fig. 41 - Outdoor CO_2 Sensor Connections

Smoke Detector/Fire Shutdown (FSD) — This function is available only when PremierLink is configured for (Space) Sensor Mode. The unit is factory-wired for PremierLink FSD operation when PremierLink is factory-installed.

On 50TCQ units equipped with factory-installed Smoke Detector(s), the smoke detector controller implements the unit shutdown through its NC contact set connected to the unit's CTB input. The FSD function is initiated via the smoke detector's Alarm NO contact set. The PremierLink communicates the smoke detector's tripped status to the CCN building control. See Fig. 30, the PremierLink wiring schematic.

Filter Status Switch — This function is available only when PremierLink is configured for (Space) Sensor Mode.

PremierLink control can monitor return filter status in two ways: By monitoring a field-supplied/installed filter pressure switch or via supply fan runtime hours.

Using switch input: Install the dirty filter pressure switch according to switch manufacturer's instructions, to measure pressure drop across the unit's return filters. Connect one side of the switch's NO contact set to CTB's THERMOSTAT-R terminal. Connect the other side of the NO contact set to TB1-10. Setpoint for Dirty Filter is set at the switch. See Fig. 42.

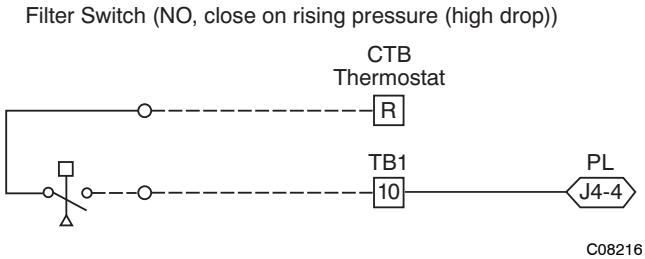

Fig. 42 - PremierLink Filter Switch Connection

When the filter switch's NO contact set closes as filter pressure drop increases (indicating dirt-laden filters), the input signal to PremierLink causes the filter status point to read "DIRTY".

Using Filter Timer Hours: Refer to Form 33CS-58SI for instructions on using the PremierLink Configuration screens and on unit alarm sequence.

Supply Fan Status Switch — The PremierLink control can monitor supply fan operation through a field-supplied/installed differential pressure switch. This sequence will prevent (or interrupt) operation of unit cooling, heating and economizer functions until the pressure switch contacts are closed indicating proper supply fan operation.

Install the differential pressure switch in the supply fan section according to switch manufacturer's instructions. Arrange the switch contact to be open on no flow and to close as pressure rises indicating fan operation.

Connect one side of the switch's NO contact set to CTB's THERMOSTAT-R terminal. Connect the other side of the NO contact set to TB1-8. Setpoint for Supply Fan Status is set at the switch. See Fig. 43.

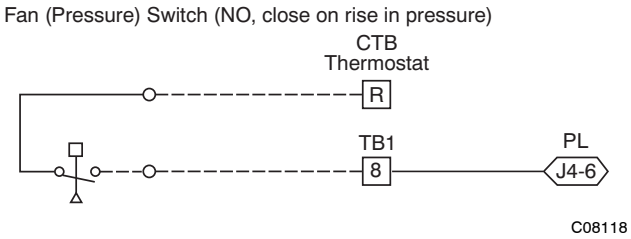

Fig. 43 - PremierLink Wiring Fan Pressure Switch Connection

Remote Occupied Switch — The PremierLink control permits a remote timeclock to override the control's on-board occupancy schedule and place the unit into Occupied mode. This function may also provide a "Door Switch" time delay function that will terminate cooling and heating functions after a 2-20 minute delay.

Connect one side of the NO contact set on the timeclock to CTB's THERMOSTAT-R terminal. Connect the other side of the timeclock contact to the unit's TB1-2 terminal.

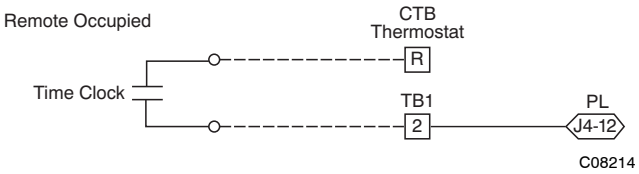

Fig. 44 - PremierLink Wiring Remote Occupied

Refer to Form 33CS-58SI for additional information on configuring the PremierLink control for Door Switch timer function.

Power Exhaust (output) - Connect the accessory Power Exhaust contactor coils(s) per Fig. 45.

Space Relative Humidity Sensor — The RH sensor is not used with 50TCQ models at this time.

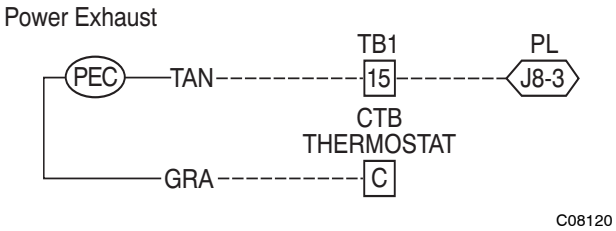

Fig. 45 - PremierLink Power Exhaust Output Connection

CCN Communication Bus — The PremierLink controller connects to the bus in a daisy chain arrangement. Negative pins on each component must be connected to respective negative pins, and likewise, positive pins on each component must be connected to respective positive pins. The controller signal pins must be wired to the signal ground pins. Wiring connections for CCN must be made at the 3-pin plug.

At any baud (9600, 19200, 38400 baud), the number of controllers is limited to 239 devices maximum. Bus length may not exceed 4000 ft, with no more than 60 total devices on any 1000-ft section. Optically isolated RS-485 repeaters are required every 1000 ft.

NOTE: Carrier device default is 9600 band.

COMMUNICATION BUS WIRE SPECIFICATIONS — The CCN Communication Bus wiring is field-supplied and field-installed. It consists of shielded 3-conductor cable with drain (ground) wire. The cable selected must be identical to the CCN Communication Bus wire used for the entire network.

See Table 6 for recommended cable.

Table 6 – Recommended Cables

MANUFACTURER	CABLE PART NO.
Alpha	2413 or 5463
American	A22503
Belden	8772
Columbia	02525

NOTE: Conductors and drain wire must be at least 20 AWG, stranded, and tinned copper. Individual conductors must be insulated with PVC, PVC/nylon, vinyl, Teflon, or polyethylene. An aluminum/polyester 100% foil shield and an outer jacket of PVC, PVC/nylon, chrome vinyl, or Teflon with a minimum operating temperature range of -20°C to 60°C is required. Do not run communication wire in the same conduit as or next to any AC voltage wiring.

The communication bus shields must be tied together at each system element. If the communication bus is entirely within one building, the resulting continuous shield must be connected to ground at only one single point. If the communication bus cable exits from one building and enters another building, the shields must be connected to the grounds at a lightning suppressor in each building (one point only).

Connecting CCN bus:

NOTE: When connecting the communication bus cable, a color code system for the entire network is recommended to simplify installation and checkout. See Table 7 for the recommended color code.

Table 7 – Color Code Recommendations

SIGNAL TYPE	CCN BUS WIRE COLOR	CCN PLUG PIN NUMBER
+	Red	1
Ground	White	2
–	Black	3

Connect the CCN (+) lead (typically RED) to the unit's TB1-12 terminal. Connect the CCN (ground) lead (typically WHT) to the unit's TB1-14 terminal. Connect the CCN (-) lead (typically BLK) to the unit's TB1-16 terminal. See Fig. 46.

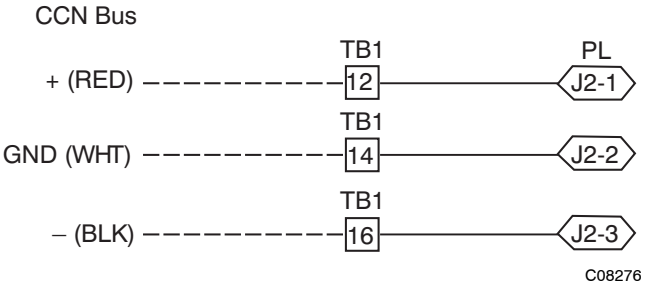

Fig. 46 - PremierLink CCN Bus Connections

RTU-MP control system

The RTU-MP controller, see Fig. 47, provides expanded stand-alone operation of the HVAC system plus connection and control through communication with several Building Automation Systems (BAS) through popular third-party network systems. The available network systems are BACnet MP/TP, Modbus and Johnson J2. Communication with LonWorks is also possible by adding an accessory interface card to the RTU-MP. Selection of the communication protocol and baud rate are made at on-board DIP switches.

The RTU-MP control is factory-mounted in the 50TCQ unit's main control box, to the left of the CTB. See Fig. 48. Factory wiring is completed through harnesses connected to the CTB. Field connections for RTU-MP sensors will be made at the Phoenix connectors on the RTU-MP board. The factory-installed RTU-MP control includes the supply-air temperature (SAT) sensor. The outdoor air temperature (OAT) sensor is included in the FIOP/accessory EconoMi$er2 package.

Refer to Table 8, RTU-MP Controller Inputs and Outputs for locations of all connections to the RTU-MP board.

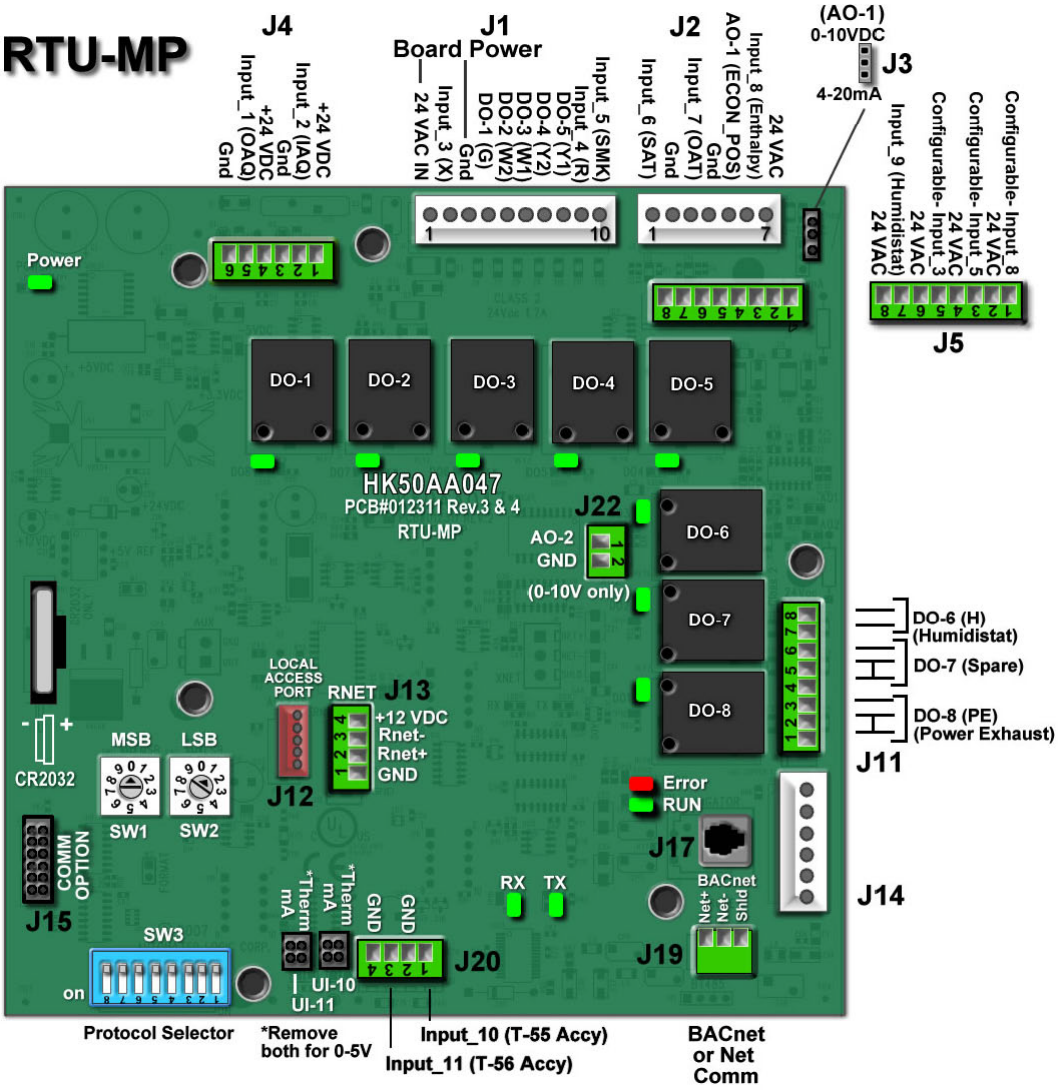

C07129

Fig. 47 - RTU-MP Multi-Protocol Control Board

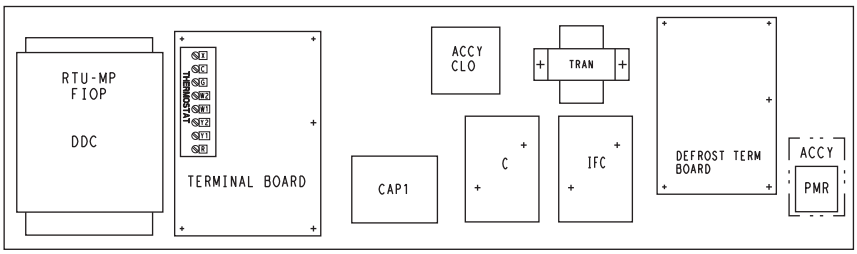

C08652

Fig. 48 - 50TCQ Control Box Component Locations

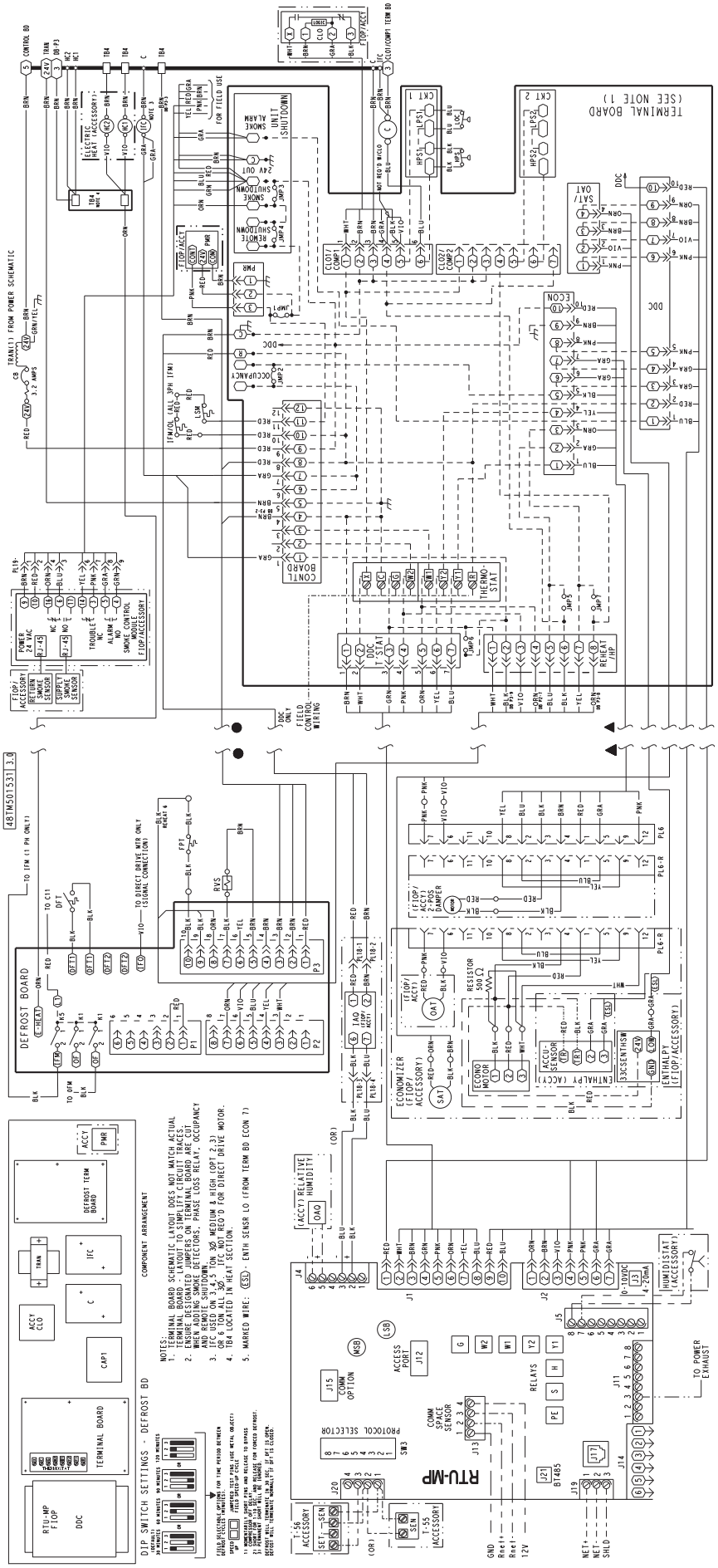

Fig. 49 - RTU-MP System Control Wiring Diagram

Table 8 – RTU-MP Controller Inputs and Outputs

POINT NAME	BACnet OBJECT NAME	TYPE OF I/O	CONNECTION PIN NUMBERS
INPUTS			
Space Temperature Sensor	sptsens	AI (10K Thermistor)	J20–1, 2
Supply Air Temperature	sat	AI (10K Thermistor)	J2–1, 2
Local Outside Air Temperature Sensor	oatsens	AI (10K Thermistor)	J2–3, 4
Space Temperature Offset Pot	sptopot	AI (100K Potentiometer)	J20–3
Indoor Air Quality	iaq	AI (4–20 ma)	J4–2, 3
Outdoor Air Quality	oaq	AI (4–20 ma)	J4–5, 6
Safety Chain Feedback	safety	DI (24 VAC)	J1–9
Compressor Safety	compstat	DI (24 VAC)	J1–2
Fire Shutdown	firedown	DI (24 VAC)	J1–10
Enthalpy Switch	enthalpy	DI (24 VAC)	J2–6, 7
Humidistat Input Status	humstat	DI (24 VAC)	J5–7, 8
CONFIGURABLE INPUTS*			
Space Relative Humidity	sprh	AI (4–20 ma)	J4–2,3 or J4–5,6
Outside Air Relative Humidity	oarh	AI (4–20 ma)	
Supply Fan Status	fanstat	DI (24 VAC)	J5–1,2 or J5–3,4 or J5 5,6 or J5–7,8
Filter Status	filtstat	DI (24 VAC)	
Remote Occupancy Input	remocc	DI (24 VAC)	
OUTPUTS			
Economizer Commanded Position	econocmd	4–20ma	J2–5
Supply Fan Relay State	sf	DO Relay (24VAC , 1A)	J1–4
Compressor 1 Relay State	comp_1	DO Relay (24VAC , 1A)	J1–8
Compressor 2 Relay State	comp_2	DO Relay (24VAC , 1A)	J1–7
Heat Stage 1 Relay State	heat_1	DO Relay (24VAC , 1A)	J1–6
Heat Stage 2 Relay State	heat_2	DO Relay (24VAC , 1A)	J1–5
Power Exhaust Relay State	aux_2	DO Relay (24VAC , 1A)	J11–3
Dehumidification Relay State	humizer	DO Relay (24VAC, 1A)	J11–7, 8

LEGEND
AI – Analog Input
AO – Analog Output
DI – Discrete Input
DO – Discrete Output
* These inputs (if installed) take the place of the default input on the specific channel according to schematic.
Parallel pins J5–1 = J2–6, J5–3 = J1–10, J5–5 = J1–2 are used for field–installation.

The RTU-MP controller requires the use of a Carrier space sensor. A standard thermostat cannot be used with the RTU-MP system.

Supply Air Temperature (SAT) Sensor - On FIOP-equipped 50TCQ unit, the unit is supplied with a supply-air temperature (SAT) sensor (33ZCSENSAT). This sensor is a tubular probe type, approx 6-inches (12.7 mm) in length. It is a nominal 10-k ohm thermistor.

The SAT is factory-wired. The SAT probe is wire-tied to the supply-air opening (on the horizontal opening end) in its shipping position. Remove the sensor for installation. Re-position the sensor in the flange of the supply-air opening or in the supply air duct (as required by local codes). Drill or punch a $^1/_2$-in. hole in the flange or duct. Use two field-supplied, self-drilling screws to secure the sensor probe in a horizontal orientation. See Fig. 29.

Outdoor Air Temperature (OAT) Sensor - The OAT is factory-mounted in the EconoMi$er2 (FIOP or accessory). It is a nominal 10k ohm thermistor attached to an eyelet mounting ring.

EconoMi$er2 - The RTU-MP control is used with EconoMi$er2 (option or accessory) for outdoor air management. The damper position is controlled directly by the RTU-MP control; EconoMi$er2 has no internal logic device.

Outdoor air management functions can be enhanced with field-installation of these accessory control devices:

Enthalpy control (outdoor air or differential sensors)
Space CO_2 sensor
Outdoor air CO_2 sensor

Field Connections - Field connections for accessory sensors and input devices are made the RTU-MP, at plugs J1, J2, J4, J5, J11 and J20. All field control wiring that connects to the RTU-MP must be routed through the raceway built into the corner post as shown in Fig. 22.

The raceway provides the UL required clearance between high- and low-voltage wiring. Pass the control wires through the hole provided in the corner post, then feed the wires thorough the raceway to the RTU-MP. Connect to the wires to the removable Phoenix connectors and then reconnect the connectors to the board.

Space Temperature (SPT) Sensors

A field-supplied Carrier space temperature sensor is required with the RTU-MP to monitor space temperature. There are 3 sensors available for this application:

- 33ZCT55SPT, space temperature sensor with override button
- 33ZCT56SPT, space temperature sensor with override button and setpoint adjustment
- 33ZCT59SPT, space temperature sensor with LCD (liquid crystal display) screen, override button, and setpoint adjustment

Use 20 gauge wire to connect the sensor to the controller. The wire is suitable for distances of up to 500 ft. Use a three-conductor shielded cable for the sensor and setpoint adjustment connections. If the setpoint adjustment (slidebar) is not required, then an unshielded, 18 or 20 gauge, two-conductor, twisted pair cable may be used.

Connect T-55 - See Fig. 31 for typical T-55 internal connections. Connect the T-55 SEN terminals to RTU-MP J20-1 and J20-2. See Fig. 50.

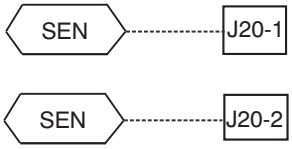

C08460

Fig. 50 - RTU-MP T-55 Sensor Connections

Connect T-56 - See Fig. 33 for T-56 internal connections. Install a jumper between SEN and SET terminals as illustrated. Connect T-56 terminals to RTU-MP J20-1, J20-2 and J20-3 per Fig. 51.

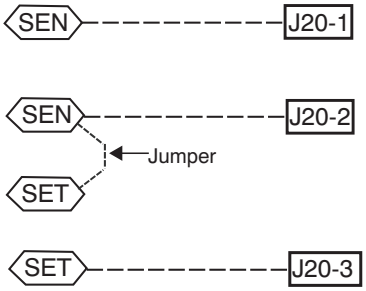

C08461

Fig. 51 - RTU-MP T-56 Sensor Connections

Connect T-59 - The T-59 space sensor requires a separate, isolated power supply of 24 VAC. See Fig. 51 for internal connections at the T-59. Connect the SEN terminal (BLU) to RTU-MP J20-1. Connect the COM terminal (BRN) to J20-2. Connect the SET terminal (STO or BLK) to J20-3.

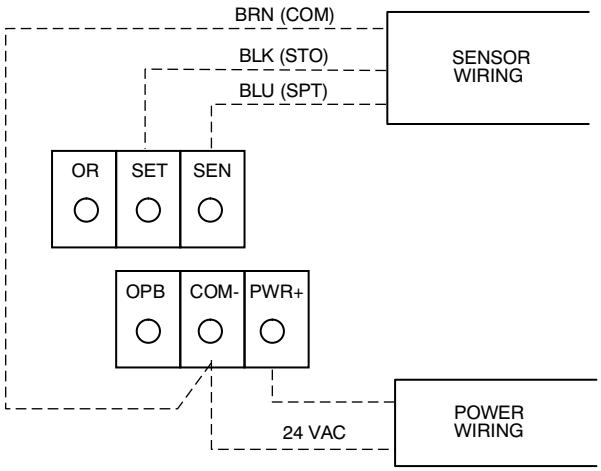

NOTE: Must use a separate isolated transformer.

C07132

Fig. 52 - Space Temperature Sensor Typical Wiring (33ZCT59SPT)

Economizer controls —

Outdoor Air Enthalpy Control (PNO 33CSENTHSW) -

The enthalpy control (33CSENTHSW) is available as a field-installed accessory to be used with the EconoMi$er2 damper system. The outdoor air enthalpy sensor is part of the enthalpy control. (The separate field-installed accessory return air enthalpy sensor (33CSENTSEN) is required for differential enthalpy control. See Fig. 36.)

Locate the enthalpy control in the economizer next to the Actuator Motor. Locate two GRA leads in the factory harness and connect the gray lead labeled "ESL" to the terminal labeled "LOW". See Fig. 36. Connect the enthalpy control power input terminals to economizer actuator power leads RED (connect to 24V) and BLK (connect to GND).

The outdoor enthalpy changeover setpoint is set at the enthalpy controller.

Differential Enthalpy Control — Differential enthalpy control is provided by sensing and comparing the outside air and return air enthalpy conditions. Install the outdoor air enthalpy control as described above. Add and install a return air enthalpy sensor.

Return Air Enthalpy Sensor — Mount the return-air enthalpy sensor (33CSENTSEN) in the return-air section of the economizer. The return air sensor is wired to the enthalpy controller (33CSENTHSW). See Fig. 37.

To wire the return air enthalpy sensor, perform the following:

1. Use a 2-conductor, 18 or 20 AWG, twisted pair cable to connect the return air enthalpy sensor to the enthalpy controller.
2. Connect the field-supplied RED wire to (+) spade connector on the return air enthalpy sensor and the (+) terminal on the enthalpy controller. Connect the BLK wire to (-) spade connector on the return air enthalpy sensor and the (-) terminal on the enthalpy controller.

Indoor Air Quality (CO_2 sensor) — The indoor air quality sensor accessory monitors space carbon dioxide (CO_2) levels. This information is used to monitor IAQ levels. Several types of sensors are available, for wall mounting in the space or in return duct, with and without LCD display, and in combination with space temperature sensors. Sensors use infrared technology to measure the levels of CO_2 present in the space air.

The CO_2 sensors are all factory set for a range of 0 to 2000 ppm and a linear mA output of 4 to 20. Refer to the instructions supplied with the CO_2 sensor for electrical requirements and terminal locations. See Fig. 38 for typical CO_2 sensor wiring schematic.

To accurately monitor the quality of the air in the conditioned air space, locate the sensor near a return-air grille (if present) so it senses the concentration of CO_2 leaving the space. The sensor should be mounted in a location to avoid direct breath contact.

Do not mount the IAQ sensor in drafty areas such as near supply ducts, open windows, fans, or over heat sources. Allow at least 3 ft (0.9 m) between the sensor and any corner. Avoid mounting the sensor where it is influenced by the supply air; the sensor gives inaccurate readings if the supply air is blown directly onto the sensor or if the supply air does not have a chance to mix with the room air before it is drawn into the return airstream.

Wiring the Indoor Air Quality Sensor —

For each sensor, use two 2-conductor 18 AWG (American Wire Gage) twisted-pair cables (unshielded) to connect the separate isolated 24 vac power source to the sensor and to connect the sensor to the control board terminals.

To connect the sensor to the control, identify the positive (4 to 20 mA) and ground (SIG COM) terminals on the sensor. See Fig. 38. Connect the 4-20 mA terminal to RTU-MP J4-2 and connect the SIG COM terminal to RTU-MP J4-3. See Fig. 53.

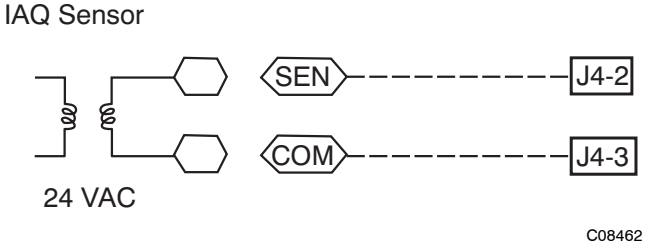

Fig. 53 - RTU-MP / Indoor CO_2 Sensor (33ZCSENCO2) Connections

Outdoor Air Quality Sensor (PNO 33ZCSENCO2 plus weatherproof enclosure) — The outdoor air CO_2 sensor is designed to monitor carbon dioxide (CO_2) levels in the outside ventilation air and interface with the ventilation damper in an HVAC system. The OAQ sensor is packaged with an outdoor cover. See Fig. 40. The outdoor air CO_2 sensor must be located in the economizer outside air hood.

Wiring the Outdoor Air CO_2 Sensor — A dedicated power supply is required for this sensor. A two-wire cable is required to wire the dedicated power supply for the sensor. The two wires should be connected to the power supply and terminals 1 and 2.

To connect the sensor to the control, identify the positive (4 to 20 mA) and ground (SIG COM) terminals on the OAQ sensor. See Fig. 38. Connect the 4 to 20 mA terminal to RTU-MP J4-5. Connect the SIG COM terminal to RTU-MP J4-6.

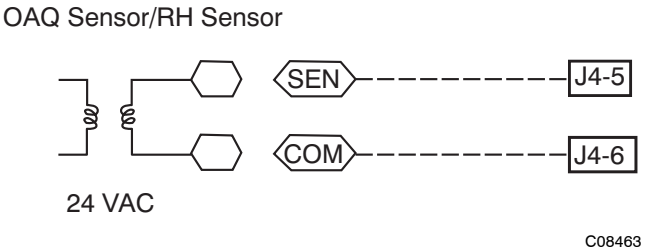

Fig. 54 - RTU-MP / Outdoor CO_2 Sensor (33ZCSENCO2) Connections

On 50TCQ units equipped with factory-installed Smoke Detector(s), the smoke detector controller implements the unit shutdown through its NC contact set connected to the unit's CTB input. The FSD function is initiated via the smoke detector's Alarm NO contact set. The RTU-MP controller communicates the smoke detector's tripped status to the BAS building control. See Fig. 49, the RTU-MP System Control Wiring Diagram.

The Fire Shutdown Switch configuration, ***MENU→Config→Inputs→input 5***, identifies the normally open status of this input when there is no fire alarm.

Connecting Discrete Inputs

Filter Status

The filter status accessory is a field-installed accessory. This accessory detects plugged filters. When installing this accessory, the unit must be configured for filter status by setting ***MENU→Config→Inputs→input 3, 5, 8, or 9*** to Filter Status and normally open (N/O) or normally closed (N/C). Input 8 or 9 is recommended for easy of installation. Refer to Fig. 47 and Fig. 49 for wire terminations at J5.

Fan Status

The fan status accessory is a field-installed accessory. This accessory detects when the indoor fan is blowing air. When installing this accessory, the unit must be configured for fan status by setting ***MENU→Config→Inputs→input 3, 5, 8, or 9*** to Fan Status and normally open (N/O) or normally closed (N/C). Input 8 or 9 is recommended for easy of installation. Refer to Fig. 47 and Fig. 49 for wire terminations at J5.

Remote Occupancy

The remote occupancy accessory is a field-installed accessory. This accessory overrides the unoccupied mode and puts the unit in occupied mode. When installing this accessory, the unit must be configured for remote occupancy by setting ***MENU→Config→Inputs→input 3, 5, 8, or 9*** to Remote Occupancy and normally open (N/O) or normally closed (N/C).

Also set ***MENU→Schedules→occupancy source*** to DI on/off. Input 8 or 9 is recommended for easy of installation. Refer to Fig. 47 and Table 8 for wire terminations at J5.

Power Exhaust (output)

Connect the accessory Power Exhaust contactor coil(s) per Fig. 55.

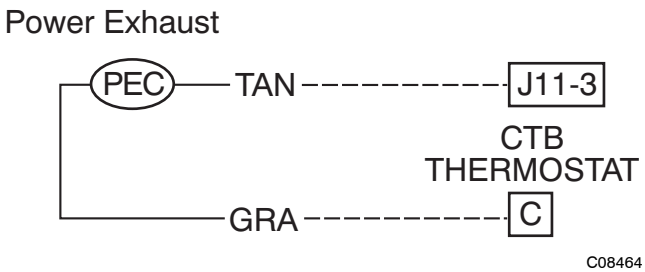

Fig. 55 - RTU-MP Power Exhaust Connections

Space Relative Humidity Sensor - The RH sensor is not used with 50TCQ models at this time.

Communication Wiring - Protocols

General

Protocols are the communication languages spoken by control devices. The main purpose of a protocol is to communicate information in the most efficient method possible. Different protocols exist to provide different kinds of information for different applications. In the BAS application, many different protocols are used, depending on manufacturer. Protocols do not change the function of a controller; just make the front end user different.

The RTU-MP can be set to communicate on four different protocols: BACnet, Modbus, N2, and LonWorks. Switch 3 (SW3) on the board is used to set protocol and baud rate. Switches 1 and 2 (SW1 and SW2) are used to set the board's network address. See Fig. 56 for the switch setting per protocol. The 3rd party connection to the RTU-MP is through plug J19.

NOTE: Power must be cycled after changing the SW1-3 switch settings.

Refer to the *RTU-MP 3rd Party Integration Guide* for more detailed information on protocols, 3rd party wiring, and networking.

SW3 Protocol Selection

PROTOCOL	DS8	DS7	DS6	DS5	DS4	DS3	DS2	DS1
BACnet MS/TP (Master)	Unused	OFF	OFF	OFF	ON	OFF	Select Baud	Select Baud
Modbus (Slave)	Unused	OFF	OFF	ON	ON	OFF	Select Baud	Select Baud
N2 (Slave)	Unused	OFF	OFF	OFF	ON	ON	OFF	OFF
LonWorks	Unused	ON	ON	OFF	ON	OFF	OFF	OFF

NOTE:
DS = Dip Switch
BACnet MS/TP SW3 example shown

Baud Rate Selections

BAUD RATE	DS2	DS1
9600	OFF	OFF
19,200	ON	OFF
38,400	OFF	ON
76,800	ON	ON

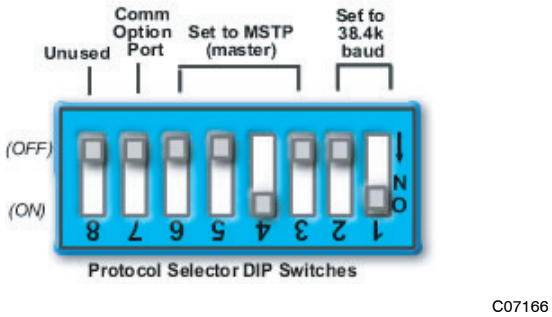

Fig. 56 - RTU-MP SW3 Dip Switch Settings

Local Access

BACview[6] Handheld

The BACview[6] is a keypad/display interface used to connect to the RTU-MP to access the control information, read sensor values, and test the RTU, see Fig. 57. This is an accessory interface that does not come with the MP controller and can only be used at the unit. Connect the BACview[6] to the RTU-MP's J12 local access port. There are 2 password protected levels in the display (User and Admin). The user password is defaulted to 0000 but can be changed. The Admin password is 1111 and cannot be changed. There is a 10 minute auto logout if a screen is idle. See Form 48-50H-T-2T, Appendix A for navigation and screen content.

Virtual BACview

Virtual BACview is a freeware computer program that functions as the BACview[6] Handheld. The USB Link interface (USB-L) is required to connect a computer to the RTU-MP board. The link cable connects a USB port to the J12 local access port. This program functions and operates identical to the handheld.

RTU-MP Troubleshooting

Communication LEDs

The LEDs indicate if the controller is speaking to the devices on the network. The LEDs should reflect communication traffic based on the baud rate set. The higher the baud rate the more solid the LEDs will appear.

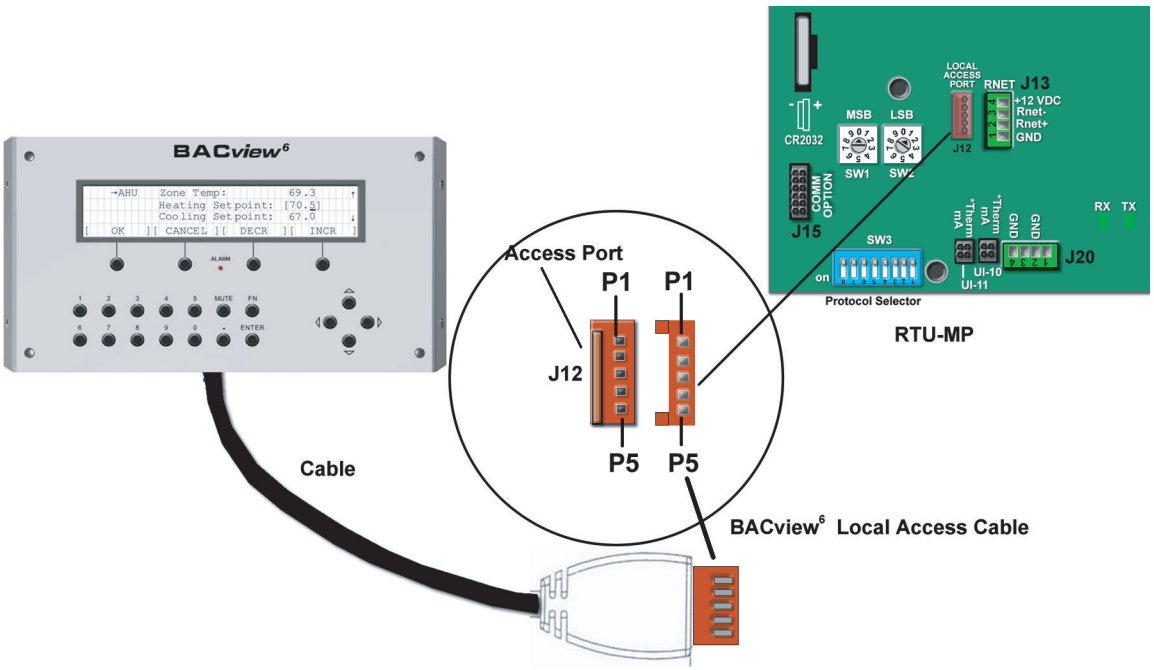

Fig. 57 - BACview[6] Handheld Connections

Table 9 – LEDs

The LEDs on the RTU-MP show the status of certain functions

If this LED is on...	Status is...
Power	The RTU MP has power
Rx	The RTU MP is receiving data from the network segment
Tx	The RTU MP is transmitting data over the network segment
DO#	The digital output is active

The **Run** and **Error** LEDs indicate control module and network status

If Run LED shows...	And Error LED shows...	Status is...
2 flashes per second	Off	Normal
2 flashes per second	2 flashes, alternating with **Run** LED	Five minute auto–restart delay after system error
2 flashes per second	3 flashes, then off	Control module has just been formatted
2 flashes per second	4 flashes, then pause	Two or more devices on this network have the same ARC156 network address
2 flashes per second	On	Exec halted after frequent system errors or control programs halted
5 flashes per second	On	Exec start–up aborted, Boot is running
5 flashes per second	Off	Firmware transfer in progress, Boot is running
7 flashes per second	7 flashes per second, alternating with **Run** LED	Ten second recovery period after brownout
14 flashes per second	14 flashes per second, alternating with **Run** LED	Brownout
On	On	Failure. Try the following solutions: • Turn the RTU–MP off, then on. • Format the RTU–MP. • Download memory to the RTU–MP. • Replace the RTU–MP.

NOTE: Refer to Form 48-50H-T-2T for complete configuration of RTU-MP, operating sequences and troubleshooting information. Refer to *RTU-MP 3rd Party Integration Guide* for details on configuration and troubleshooting of connected networks. Have a copy of these manuals available at unit start-up.

SMOKE DETECTORS

Smoke detectors are available as factory-installed options on 50TCQ models. Smoke detectors may be specified for Supply Air only or for Return Air without or with economizer or in combination of Supply Air and Return Air. Return Air smoke detectors are arranged for vertical return configurations only. All components necessary for operation are factory-provided and mounted. The unit is factory-configured for immediate smoke detector shutdown operation; additional wiring or modifications to unit terminal board may be necessary to complete the unit and smoke detector configuration to meet project requirements.

Units equipped with factory-optional Return Air smoke detectors require a relocation of the sensor module at unit installation. See "**Completing Installation of Return Air Smoke Sensor**:" on page 35 for details.

System

The smoke detector system consists of a four-wire controller and one or two sensors. Its primary function is to shut down the rooftop unit in order to prevent smoke from circulating throughout the building. It is not to be used as a life saving device.

Controller

The controller (see Fig. 58) includes a controller housing, a printed circuit board, and a clear plastic cover. The controller can be connected to one or two compatible duct smoke sensors. The clear plastic cover is secured to the housing with a single captive screw for easy access to the wiring terminals. The controller has three LEDs (for Power, Trouble and Alarm) and a manual test/reset button (on the cover face).

Sensor

The sensor (see Fig. 59) includes a plastic housing, a printed circuit board, a clear plastic cover, a sampling tube inlet and an exhaust tube. The sampling tube (when used) and exhaust tube are attached during installation. The sampling tube varies in length depending on the size of the rooftop unit. The clear plastic cover permits visual inspections without having to disassemble the sensor. The cover attaches to the sensor housing using four captive screws and forms an airtight chamber around the sensing electronics. Each sensor includes a harness with an RJ45

terminal for connecting to the controller. Each sensor has four LEDs (for Power, Trouble, Alarm and Dirty) and a manual test/reset button (on the left-side of the housing).

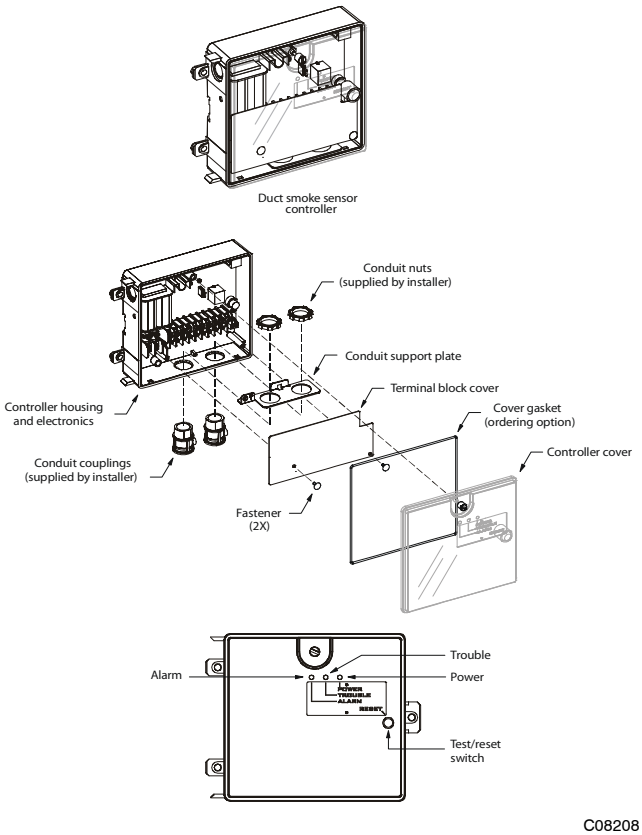

Fig. 58 - Controller Assembly

Air is introduced to the duct smoke detector sensor's sensing chamber through a sampling tube that extends into the HVAC duct and is directed back into the ventilation system through a (shorter) exhaust tube. The difference in air pressure between the two tubes pulls the sampled air through the sensing chamber. When a sufficient amount of smoke is detected in the sensing chamber, the sensor signals an alarm state and the controller automatically takes the appropriate action to shut down fans and blowers, change over air handling systems, notify the fire alarm control panel, etc.

The sensor uses a process called differential sensing to prevent gradual environmental changes from triggering false alarms. A rapid change in environmental conditions, such as smoke from a fire, causes the sensor to signal an alarm state but dust and debris accumulated over time does not.

For installations using two sensors, the duct smoke detector does not differentiate which sensor signals an alarm or trouble condition.

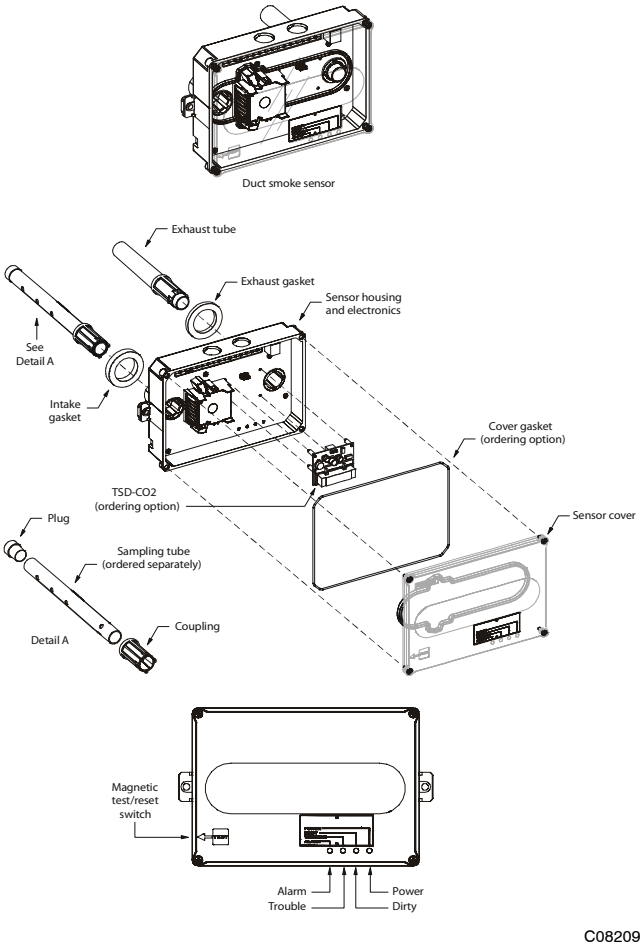

Fig. 59 - Smoke Detector Sensor

Smoke Detector Locations

Supply Air — The Supply Air smoke detector sensor is located to the left of the unit's indoor (supply) fan. See Fig. 60. Access is through the fan access panel. There is no sampling tube used at this location. The sampling tube inlet extends through the side plate of the fan housing (into a high pressure area). The controller is located on a bracket to the right of the return filter, accessed through the lift-off filter panel.

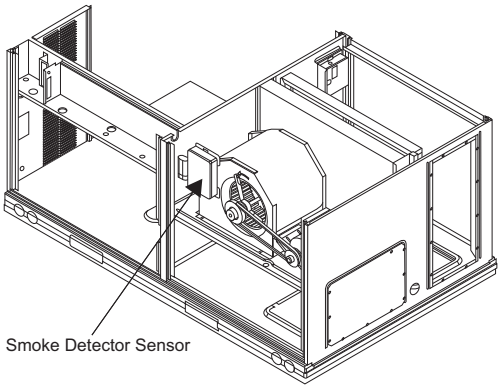

Fig. 60 - Typical Supply Air Smoke Detector Sensor Location

Return Air without Economizer — The sampling tube is located across the return air opening on the unit basepan. See Fig. 61. The holes in the sampling tube face

downward, into the return air stream. The sampling tube is connected via tubing to the return air sensor that is mounted on a bracket high on the partition between return filter and controller location. (This sensor is shipped in a flat-mounting location. Installation requires that this sensor be relocated to its operating location and the tubing to the sampling tube be connected. See "**Completing Installation of Return Air Smoke Sensor**:" for details.)

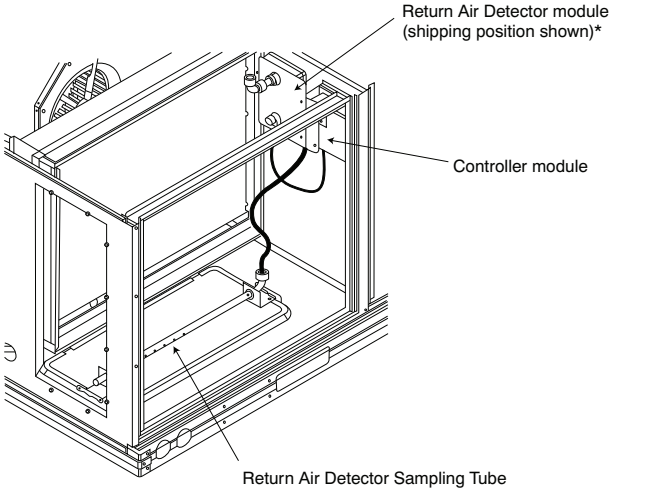

*RA detector must be moved from shipping position to operating position by installer

C07307

Fig. 61 - Typical Return Air Detector Location

Return Air with Economizer — The sampling tube is inserted through the side plates of the economizer housing, placing it across the return air opening on the unit basepan. See Fig. 62. The holes in the sampling tube face downward, into the return air stream. The sampling tube is connected via tubing to the return air sensor that is mounted on a bracket high on the partition between return filter and controller location. (This sensor is shipped in a flat-mounting location. Installation requires that this sensor be relocated to its operating location and the tubing to the sampling tube be connected. See the following installation procedure.)

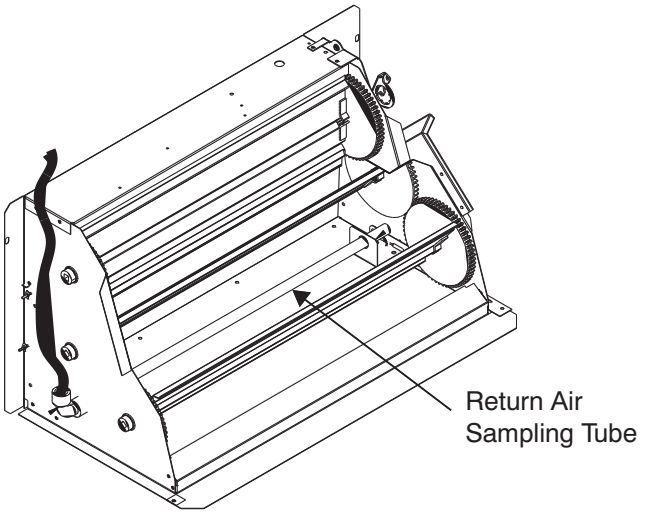

C08129

Fig. 62 - Return Air Sampling Tube Location

Completing Installation of Return Air Smoke Sensor:

1. Unscrew the two screws holding the Return Air Sensor detector plate. See Fig. 63. Save the screws.
2. Remove the Return Air Sensor and its detector plate.
3. Rotate the detector plate so the sensor is facing outwards and the sampling tube connection is on the bottom. See Fig. 64.
4. Screw the sensor and detector plate into its operating position using screws from Step 1. Make sure the sampling tube connection is on the bottom and the exhaust tube is on the top. See Fig. 64.
5. Connect the flexible tube on the sampling inlet to the sampling tube on the basepan.

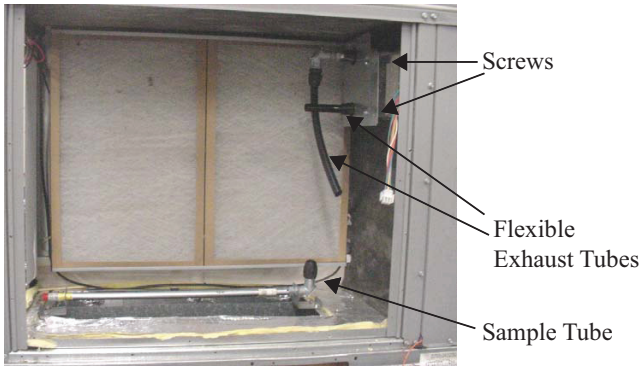

C08126

Fig. 63 - Return Air Detector Shipping Position

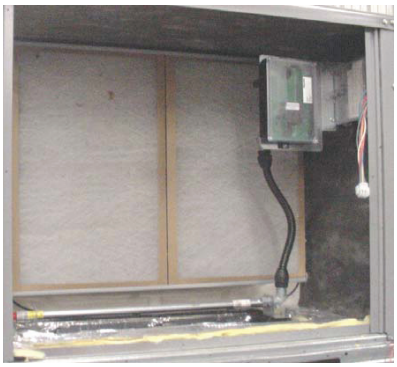

C08127

Fig. 64 - Return Air Sensor Operating Position

Additional Application Data — Refer to Catalog No. HKRNKA-1XA for discussions on additional control features of these smoke detectors including multiple unit coordination.

Table 10 – Unit Wire/MOCP Sizing Data

UNIT	NOM. V–PH–HZ	IFM TYPE	ELECTRIC HEATER		NO C.O. or UNPWRD C.O.							
					NO P.E.				w/ P.E. (pwrd fr/unit)			
			Nom (kW)	FLA	MCA	MOCP	DISC. SIZE		MCA	MOCP	DISC. SIZE	
							FLA	LRA			FLA	LRA
50TCQ*12	208/230–3–60	STD	–	–	46.9/46.9	60/60	49/49	282/282	51.7/51.7	60/60	55/55	287/287
			7.8/10.4	21.7/25.0	74.0/78.1	80/80	74/78	304/307	78.8/82.9	80/90	80/84	309/312
			12.0/16.0	33.4/38.5	88.6/95.0	90/100	88/94	315/321	93.4/99.8	100/100	93/99	320/326
			24.0/32.0	66.7/77.0	130.3/143.1	150/150	126/138	349/359	135.1/147.9	150/150	132/143	354/364
			31.8/42.4	88.4/102.0	157.4/174.4	175/175	161/167	459/486	162.2/179.2	175/200	157/172	464/491
			37.6/50.0	104.2/120.3	177.1/167.2	200/175	169/188	490/523	181.9/172.0	200/200	175/193	495/528
		MED	–	–	51.7/51.7	60/60	55/55	325/325	56.5/56.5	70/70	60/60	330/330
			7.8/10.4	21.7/25.0	78.8/82.9	80/90	80/84	347/350	83.6/87.7	90/90	85/89	352/355
			12.0/16.0	33.4/38.5	93.4/99.8	100/100	93/99	358/364	98.2/104.6	100/110	99/105	363/369
			24.0/32.0	66.7/77.0	135.1/147.9	150/150	132/143	392/402	139.9/152.7	150/175	137/149	397/407
			31.8/42.4	88.4/102.0	162.2/179.2	175/200	157/172	502/529	167.0/184.0	175/200	162/178	507/534
			37.6/50.0	104.2/120.3	181.9/172.0	200/200	175/193	533/566	186.7/176.8	200/200	180/199	538/571
		HIGH	–	–	56.7/56.7	70/70	61/61	334/334	61.5/61.5	70/70	66/66	339/339
			7.8/10.4	21.7/25.0	83.8/87.9	90/90	86/89	356/359	88.6/92.7	90/100	91/95	361/364
			12.0/16.0	33.4/38.5	98.4/104.8	100/110	99/105	367/373	103.2/109.6	110/110	105/110	372/378
			24.0/32.0	66.7/77.0	140.1/152.9	150/175	137/149	401/411	144.9/157.7	150/175	143/155	406/416
			31.8/42.4	88.4/102.0	167.2/184.2	175/200	162/178	511/538	172.0/189.0	175/200	168/183	516/543
			37.6/50.0	104.2/120.3	186.9/177.0	200/200	180/199	542/575	191.7/181.8	200/200	186/204	547/580
	460–3–60	STD	–	–	23.0	30	24	135	25.2	30	27	137
			13.9	16.7	43.9	45	43	152	46.1	50	46	154
			16.5	19.8	47.8	50	47	155	50.0	50	50	157
			33.0	39.7	72.7	80	70	175	74.9	80	72	177
			41.7	50.2	85.8	90	82	235	88.0	90	85	237
			50.0	60.1	83.1	90	93	255	85.3	90	96	257
		MED	–	–	24.8	30	26	157	27.0	30	29	159
			13.9	16.7	45.7	50	46	174	47.9	50	48	176
			16.5	19.8	49.6	50	49	177	51.8	60	52	179
			33.0	39.7	74.5	80	72	197	76.7	80	75	199
			41.7	50.2	87.6	90	84	257	89.8	90	87	259
			50.0	60.1	84.9	90	95	277	87.1	90	98	279
		HIGH	–	–	27.8	30	30	161	30.0	35	32	163
			13.9	16.7	48.7	50	49	178	50.9	60	52	180
			16.5	19.8	52.6	60	53	181	54.8	60	55	183
			33.0	39.7	77.5	80	75	201	79.7	80	78	203
			41.7	50.2	90.6	100	88	261	92.8	100	90	263
			50.0	60.1	87.9	90	99	281	90.1	100	101	283
	575–3–60	STD	–	–	17.5	20	18	105	19.2	25	20	107
			17.0	20.4	43.0	45	42	125	44.7	45	44	127
			34.0	40.9	68.6	70	65	146	70.3	80	67	148
			51.0	61.3	78.8	90	89	228	80.5	90	91	230
		MED	–	–	18.3	20	19	116	20.0	25	21	118
			17.0	20.4	43.8	45	43	136	45.5	50	45	138
			34.0	40.9	69.4	75	66	157	71.1	80	68	159
			51.0	61.3	79.6	90	90	239	81.3	90	92	241
		HIGH	–	–	21.1	25	23	130	22.8	25	24	132
			17.0	20.4	46.6	50	46	150	48.3	50	48	152
			34.0	40.9	72.2	80	70	171	73.9	80	72	173
			51.0	61.3	82.4	90	93	253	84.1	90	95	255

NOTE: See page 37 for table legend and notes.

Legend and Notes for Table 10

LEGEND:

CO	–	Convenient outlet
DISC	–	Disconnect
FLA	–	Full load amps
IFM	–	Indoor fan motor
LRA	–	Locked rotor amps
MCA	–	Minimum circuit amps
MOCP	–	Maximum over current protection
PE	–	Power exhaust
UNPWR CO	–	Unpowered convenient outlet

NOTES:

1. In compliance with NEC requirements for multimotor and combination load equipment (refer to NEC Articles 430 and 440), the overcurrent protective device for the unit shall be fuse or HACR breaker. Canadian units may be fuse or circuit breaker.
2. **Unbalanced 3-Phase Supply Voltage**
   Never operate a motor where a phase imbalance in supply voltage is greater than 2%. Use the following formula to determine the percentage of voltage imbalance.

$$\text{\% Voltage Imbalance} = 100 \times \frac{\text{max voltage deviation from average voltage}}{\text{average voltage}}$$

Example: Supply voltage is 230-3-60

AB = 224 v
BC = 231 v
AC = 226 v

$$\text{Average Voltage} = \frac{(224 + 231 + 226)}{3} = \frac{681}{3}$$

$$= 227$$

Determine maximum deviation from average voltage.
(AB) 227 – 224 = 3 v
(BC) 231 – 227 = 4 v
(AC) 227 – 226 = 1 v
Maximum deviation is 4 v.
Determine percent of voltage imbalance.

$$\text{\% Voltage Imbalance} = 100 \times \frac{4}{227}$$

$$= 1.76\%$$

This amount of phase imbalance is satisfactory as it is below the maximum allowable 2%.
IMPORTANT: If the supply voltage phase imbalance is more than 2%, contact your local electric utility company immediately.

50TCQD12

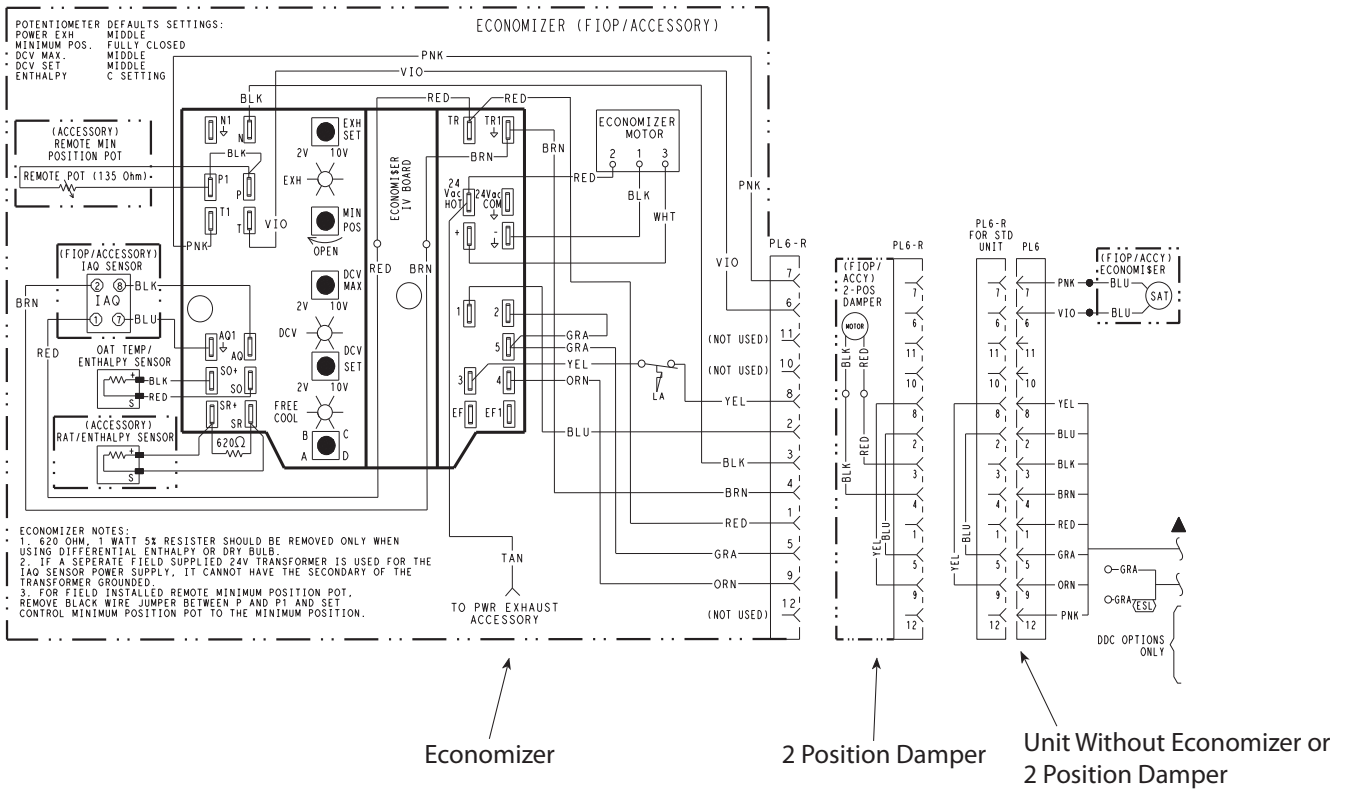

Fig. 65 - EconoMi$er™ IV Wiring

Step 11 — Adjust Factory-Installed Options

Smoke Detectors —

Smoke detector(s) will be connected at the Central Terminal Board (CTB, at terminals marked "Smoke Shutdown". Remove jumper JMP 3 when ready to energize unit.

EconoMi$er IV Occupancy Switch —

Refer to Fig. 65 for general EconoMi$er IV wiring. External occupancy control is managed through a connection on the Central Terminal Board.

If external occupancy control is desired, connect a time clock or remotely controlled switch (closed for Occupied, open for Unoccupied sequence) at terminals marked OCCUPANCY on CTB. Remove or cut jumper JMP 2 to complete the installation.

Step 12 — Install Accessories

Available accessories include:

- Roof Curb
- Thru-base connection kit (must be installed before unit is set on curb)
- Manual outside air damper
- Two-Position motorized outside air damper
- EconoMi$er IV (with control and integrated barometric relief)
- EconoMi$er2 (without control/for external signal and integrated barometric relief)
- Barometric relief
- Power Exhaust
- Differential dry-bulb sensor (EconoMi$er IV)
- Outdoor enthalpy sensor
- Differential enthalpy sensor
- Time Guard II compressor anti-cycle control
- Outdoor coil protector grille
- Head pressure control
- Programmable setback thermostat
- Electrical/Mechanical thermostat and subbase
- Thermidistat™ device
- Humidistat
- Electric Heaters
- Single Point kits
- Thermostat / Sensors
- CO_2 sensor
- DDC interface (PremierLink)
- Louvered hail guard
- Phase monitor control

Refer to separate installation instructions for information on installing these accessories.

Pre-Start and Start-Up

This completes the mechanical installation of the unit. Refer to the unit's Service Manual for detailed Pre-Start and Start-up instructions.

Copyright 2009 Carrier Corp. • 7310 W. Morris St. • Indianapolis, IN 46231 Printed in U.S.A. Edition Date: 10/09 **Catalog No: 50TCQ−04SI**

Manufacturer reserves the right to change, at any time, specifications and designs without notice and without obligations. Replaces: NEW