58MEB PERFORMANCE™ BOOST 90
4−WAY MULTIPOISE CONDENSING GAS FURNACE
Input Rates: 40,0000 Only

Carrier
turn to the experts

Product Data

4-WAY MULTIPOISE DESIGN ALLOWS MORE APPLICATIONS

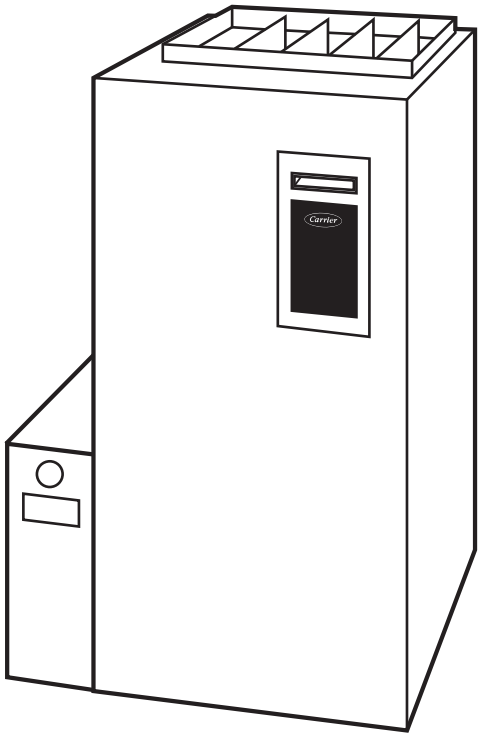

A05069

A UNIQUE SEER SOLUTION

The Performance™ Boost 90 is an exciting addition to your product line. This high-efficiency 4-way multipoise design furnace allows more applications while the ECM motor and Carrier's control logic combine to provide a SEER BOOST of up to 1.5 points.*

Some of Carrier's best-engineered components contribute to the efficient performance of this condensing furnace. The Performance Boost 90 utilizes Power Heat™ hot surface ignition (HSI), which ignites the burners directly. HSI eliminates gas waste that typical continuous-pilot designs can bring. Hot surface ignition has proven to contribute to reliable start-up and operation of Carrier furnaces.

Another deluxe feature included with this furnace is Carrier's trusted Serpentuff™ secondary heat exchanger; a patented polypropylene laminate that provides exceptional heat transfer and corrosion resistance. Using the exclusive flow-through design, the secondary heat exchanger reduces the pressure drop in the furnace resulting in lower electrical usage. The high efficiency achieved by superior heat transfer is made only better—by optimizing the efficient ECM motor speed tap locations.

A standard media filter cabinet accessory is provided with the Performance Boost 90 in order to provide an opportunity to enhance indoor air quality. As with all other Carrier furnaces, this model is designed to work as a part of the total home comfort system which includes elements for cooling, air cleaning, humidification, ventilation and zoning. Boosting the unit's efficiency with the ECM motor and Carrier's deluxe features show the Performance Boost 90 has been designed with the homeowner in mind.

PERFORMANCE™ BOOST 90 FEATURES & BENEFITS

Serpentuff™ — Exclusive Serpentuff coating, a patented polypropylene laminate is used on the secondary heat exchanger and greatly reduces maintenance.

Power Heat™ Igniter — Carrier's unique SiN igniter is not only physically robust but it is also electrically robust. It is capable of running at line voltage and does not require complex voltage regulators as do other brands. This unique feature further enhances the reliability of the Performance Boost 90 gas furnace and continues Carrier's tradition of technology leadership and innovation in providing a reliable and durable product.

ComfortFan™ — Improves comfort all year long by allowing the homeowner to select different fan speeds during continuous fan operation to achieve more or less airflow. This is done right at the thermostat.

SmartEvap™ — This feature allows your system to reduce summertime humidity levels by nearly 10% over standard systems.

Media Filter Cabinet — Enhanced indoor air quality in your home is made easier with our media filter cabinet—a standard accessory on all Deluxe furnaces. When installed as a part of your system, this cabinet allows for easy and convenient addition of a Carrier high-efficiency air filter.

Control Center — Microprocessor controls sequencing and furnace operation. Equipped with a component test feature and status indicator light to assist in troubleshooting. Microprocessor controls blower times to start blower after main burners ignite to eliminate cold air blowing into rooms.

*as compared to the Air−Conditioning, Heating and Refrigeration Institute's standard coil−only rating (A/Cs up to 3.5 tons) when paired with selected Carrier evaporator coils.

Direct or Non-direct Venting — The Performance Boost 90 can be installed as a 1 pipe/Non-Direct vent (except 140 size unit and in manufactured/mobile home installations) or 2 pipe/Direct vent furnace. All direct vent Performance Boost 90 models can be installed in a manufactured (mobile) home when the optional kit is used. This provides added flexibility to meet diverse installation needs.

Insulated Blower Compartment —The acoustical insulation reduces air and motor noise to promote quiet operation.

Combustion Products Venting — The combustion-air and vent pipes can terminate through a side wall or through the roof when used with a factory-authorized vent termination kit.

Insulation — Foil-faced insulation in heat exchanger section of the casing minimizes heat loss.

Bottom Closure — Factory-installed for side return; easily removable for bottom return.

Filter — Cleanable filter with retainer is standard.

Blower Access Panel Switch — Shuts off all 115-v power through furnace components whenever blower access panel is opened.

Casing — One piece, seamless wrap-around construction of heavy, galvanized steel that resists corrosion.

Adjustable Blower Speed — For precise airflow selection of heating or cooling operation.

Monoport Burners — The burners are finely tuned for smooth, quiet combustion plus economical gas usage.

Slow Opening Redundant Gas Valve — Shuts off gas to burners if any of the valves fails to close completely for any reason. The slow opening feature reduces start-up noise from rapid ignition.

Quality Registration — The Performance Boost 90 is engineered and manufactured under an ISO 9001 registered quality system.

Certifications — The Performance Boost 90 Model units are CSA (A.G.A. and C.G.A.) design certified for use with natural and propane gases. The furnace is factory-shipped for use with natural gas. A CSA (A.G.A./C.G.A.) listed gas conversion kit is required to convert furnace for use with propane gas. The efficiency is GAMA efficiency rating certified. The Performance Boost 90 meets California Air Quality Management District emission requirements. Refer to Vent Table, for elevation limitations.

58MEB

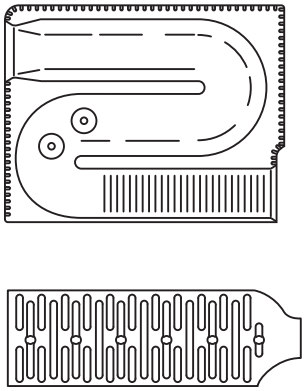

A92505

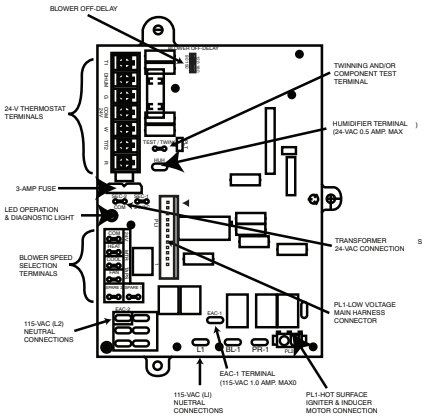

A08345

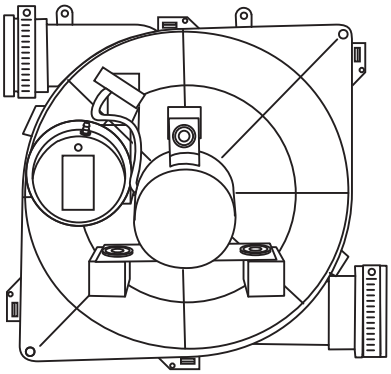

A02172

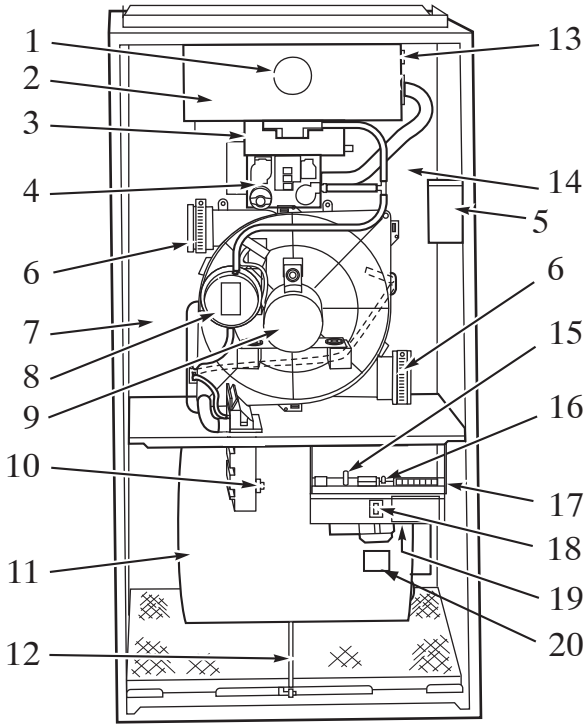

A08421

1. Burner sight glass for viewing burner flame.

2. Burner assembly (inside), operates with energy-saving, inshot burners and hot surface igniter for safe, dependable heating.

3. Combustion-air intake connection to ensure contaminant-free air (right or left side).

4. Redundant gas valve, safe, efficient, features 1 gas control with 2 internal shutoff valves.

5. Junction box for 115-v electrical power supply. (right or left side)

6. Vent outlet uses sealed PVC pipe to carry vent gases from the furnace's combustion system (right or left side).

7. Secondary condensing heat exchanger (inside), wrings out more heat through condensation of gases. Constructed with polypropylene-laminated steel to ensure durability.

8. Pressure switch ensures adequate flow of flue products through furnace and out vent system.

9. Inducer motor pulls hot flue gases through the heat exchangers, maintaining negative pressure for added safety.

10. Condensate drain connection collects moisture condensed during the combustion process.

11. Heavy-duty blower circulates air across the heat exchangers to transfer heat into the home.

12. Air filter and retainer may be used for side or bottom return application.

13. Rollout switch (manual reset) to prevent overtemperature in burner area.

14. Primary serpentine heat exchanger (inside). Stretches fuel dollars with the S-shaped heat-flow design. Solid weld-free construction of corrosion-resistant aluminized steel means reliability.

15. A 3-amp fuse provides electrical and component protection.

16. Light emitting diode (LED) on control center. Code lights are for diagnosing furnace operation and service requirements.

17. Control center.

18. Blower access panel safety interlock switch.

19. Transformer (24v) behind control center provides low-voltage power to furnace control center and thermostat.

20. Power choke (used with 1 HP and 3/4 HP motors.)

MODEL NUMBER NOMENCLATURE

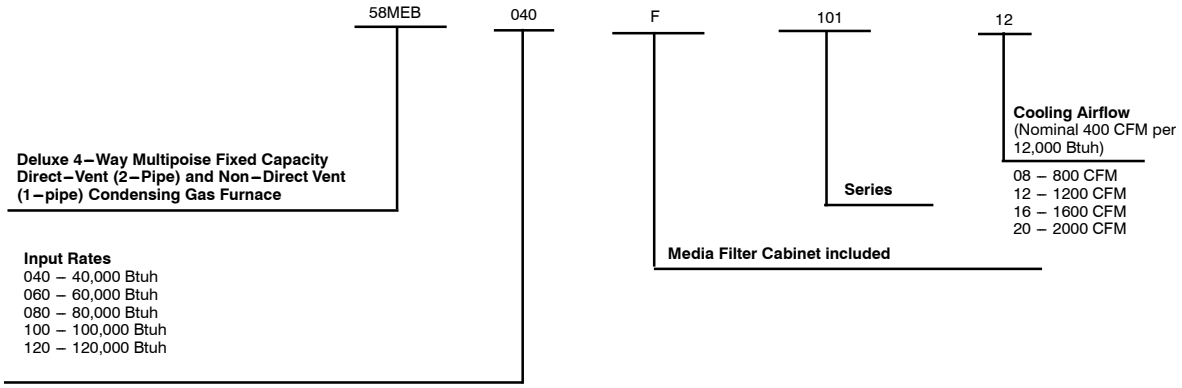

Use of the AHRI Certified TM Mark indicates a manufacturer's participation in the program. For verification of certification for individual products, go to www.ahridirectory.org.

Always Ask For FACTORY AUTHORIZED PARTS

PHYSICAL DATA

NOTE: 60-120 sizes are phasing out.

UNIT SIZE	040−12	~~060−12~~	~~080−12~~	~~080−16~~	~~100−20~~	~~120−20~~
SHIPPING WEIGHT LB. (KG)	175 (47)	182 (57)	198 (64)	205 (69)	232	261 (74)
LIMIT CONTROL	SPST					
HEATING BLOWER CONTROL (Off Delay)	Solid−State Time Operation					
BURNERS (Monoport)	2	3	4	4	5	6
GAS CONNECTION SIZE	1/2−in. NPT					
GAS VALVE(Redundant) Manufacturer	White−Rodgers					
Minimum Inlet Pressure (in. wc)	4.5 (Natural Gas)					
Maximum Inlet Pressure (in. wc)	13.6 (Natural Gas)					
IGNITION DEVICE	Hot Surface					
DIRECT−DRIVE MOTOR (ECM X−13)	1/2	1/2	1/2	3/4	1	1
MOTOR FULL LOAD AMPS	6.8	6.8	6.8	8.4	10.9	10.9
RPM (Nominal) − SPEEDS	1050−5					
BLOWER WHEEL DIAMETER X WIDTH − IN (mm)	10 X 7 (254 X 178)	10 X 7 (254 X 178)	10 X 7 (254 X 178)	11 X 8 (279 X 203)	11 X 10 (279 X 254)	11 X 10 (279 X 254)
FILTER SIZE (Washable) − IN (mm)	(1) 16 X 25 X 3/4 (406 X 635 X 19)				(1) 20 X 25 X 3/4 (508 X 635 X 19)	(1) 24 X 25 X 3/4 (610 X 635 X 19)

CARRIER ACCESSORIES*

ACCESSORIES	
GAS CONVERSION KIT – NATURAL TO PROPANE	KGANP4601ALL
GAS CONVERSION KIT – PROPANE TO NATURAL	KGANP3901ALL
MANUFACTURED (MOBILE) HOME KIT	KGAMH0301KIT
DOWNFLOW BASE (For Combustible Floors)‡	KGASB0301ALL
VENT TERMINATION KIT (Bracket Only for 2 Pipes)	2–IN. –KGAVT0101BRA 3–IN. – KGAVT0201BRA
CONCENTRIC TERMINATION KIT (Single Exit)	2–IN. –KGAVT0701CVT 3–IN. – KGAVT0801CVT
CONDENSATE FREEZE PROTECTION KIT	KGAHT01010CFP
CONDENSATE NEUTRALIZER KIT (Obtained thru RCD)	P908–0001
ELECTRONIC AIR CLEANER (EAC)	Model EACB
AIR PURIFIER	Models GAPAAXCC1625, GAPAAXCC2025
MECHANICAL AIR CLEANER	Models EZXCAB, FILCAB
HUMIDIFIER	Model HUM
HEAT RECOVERY VENTILATOR	Model HRV
ENERGY RECOVERY VENTILATOR	Model ERV
UV LIGHTS	Model UVL
VENT/EXHAUST PIPE EXTERNAL TRAP KIT	KGAET0106ETK
DOOR GASKET KIT	KGBAC0110DGK
UNFRAMED FILTER, PERMANENT WASHABLE 16 X 25 (406 X 635)	KGAWF1301UFR
UNFRAMED FILTER, PERMANENT WASHABLE 20 X 25 (508 X 635)	KGAWF1401UFR
UNFRAMED FILTER, PERMANENT WASHABLE 24 X 25 (610 X 635)	KGAWF1501UFR
THERMOSTAT – NON–PROGRAMMABLE	For use with 1–speed Air Conditioner – deg. F/C, Auto Changeover – TP–NAC, TC–NAC
	For use with 1–speed Air Conditioner – deg. F/C, Auto Changeover – TP–NHP–TC–NHP*
	For use with 2–speed Air Conditioner – deg. F/C, Auto Changeover – TP–NRH*
	For use with multi–use / stage configurations – deg. F/C, Auto Changeover/Temperature and Humidity Control – TP–PRH†
THERMOSTAT – PROGRAMMABLE	For use with 1–speed Air Conditioner – deg. F/C, Auto Changeover, 7–Day Programmable – TP–PAC
	For use with 1–speed Air Conditioner – deg. F/C, Auto Changeover, 7–Day Programmable – TP–PHP*
	For use with 2–speed Air Conditioner – deg. F/C, Auto Changeover, 7–Day Programmable – TP–PRH*
	For use with 1–speed Air Conditioner – deg. F/C, 5–2 Day Programmable – TC–PAC
	For use with multi–stage applications – deg. F/C, Auto Changeover, 7–Day Programmable – TP–PHP‡
	For multi–use / stage configurations – deg. F/C, Auto Changeover, 7–Day Programmable/ Temperature and Humidity Control –TP–PRH†
ZONING CONTROL	Comfort Series Three–Zone Zone Kit – ZONECC3ZAC01, ZONECC3ZHP01
	2–Performance Series Zoning/Temperature and Humidity Control – ZONECC2KIT01–B
	4–Performance Series Zoning/Temperature and Humidity Control – ZONECC4KIT01–B
	8–Performance Series Zoning/Temperature and Humidity Control – ZONECC8KIT01–B

*Factory–authorized and field–installed. Gas conversion kits are CSA (A.G.A./C.G.A.) recognized
Required for installation on combustible floors when no coil box is used, or when any coil box other than a Carrier cased coil is used.

*Model HP and 2S thermostat must be field converted to air conditioner operation.

†Thermidistat™ Control control can be configured for multiple use and staging. It must be configured for each specific application.

‡Dual Fuel thermostat is used with furnace and heat pump application.

58MEB

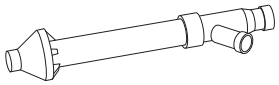

A93086

CONCENTRIC VENT (DIRECT VENT/ 2-PIPE ONLY)

A concentric vent kit allows vent and combustion-air pipes to terminate through a single exit in a roof or side wall.

One pipe runs inside the other allowing venting through the inner pipe and combustion air to be drawn in through the outer pipe.

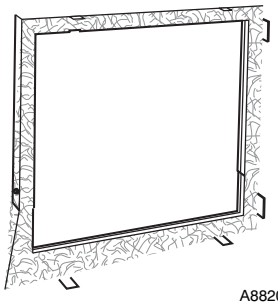

A88202

DOWNFLOW SUBBASE

One base fits all furnace sizes. The base is designed to be installed between the furnace and a combustible floor when no coil box is used or when a coil box other than a Carrier cased coil is used. It is CSA (A.G.A./C.G.A.) design certified for use with Carrier 58MEB furnaces when installed in downflow applications.

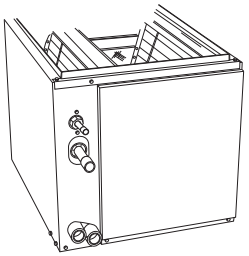

A96214

CARRIER CASED N-COIL

(as shown)

The Carrier Cased N-Coil or A-Coil is an upflow/downflow furnace coil which can also replace the downflow subbase when installing the 58MEB on combustible flooring in the downflow orientation.

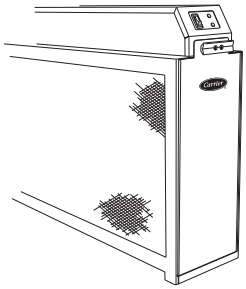

A97152

ELECTRONIC AIR CLEANER

Cleans the air of smoke, dirt, and many pollens commonly found. Saves decorating and cleaning expenses by keeping carpets, furniture, and drapes cleaner.

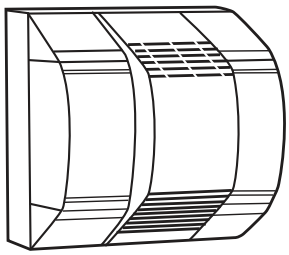

A01484

HUMIDIFIER

By adding moisture to winter-dry air, a Carrier humidifier can often improve comfort and keeps woodwork, wallpaper, and paint in better condition. Moisturizing household air also helps to retain normal body heat and provides comfort at lower temperatures.

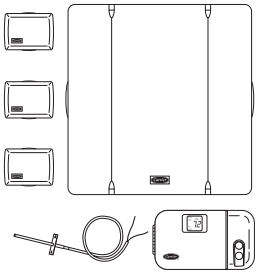

A97432

CONTROLS: THERMOSTATS AND ZONING

Available in programmable and non-programmable models, Carrier thermostats maintain a constant, comfortable temperature level in the home.

For the ultimate in home comfort, Carrier's 2, 4, and 8-zone systems allow temperature control of individual zones of the home. This is accomplished through a series of electronic dampers and remote room sensors. The 4-zone system is shown.

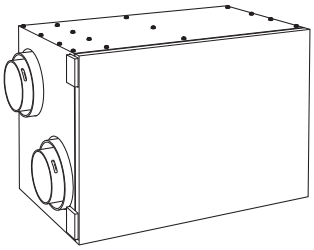

A94336

ENERGY/HEAT RECOVERY VENTILATOR

Carrier's energy or heat recovery ventilators exhaust stale indoor air and provide fresh outdoor air to the home while minimizing heat loss and humidity level. Especially useful for today's tighter constructed houses.

Energy recovery ventilator is shown.

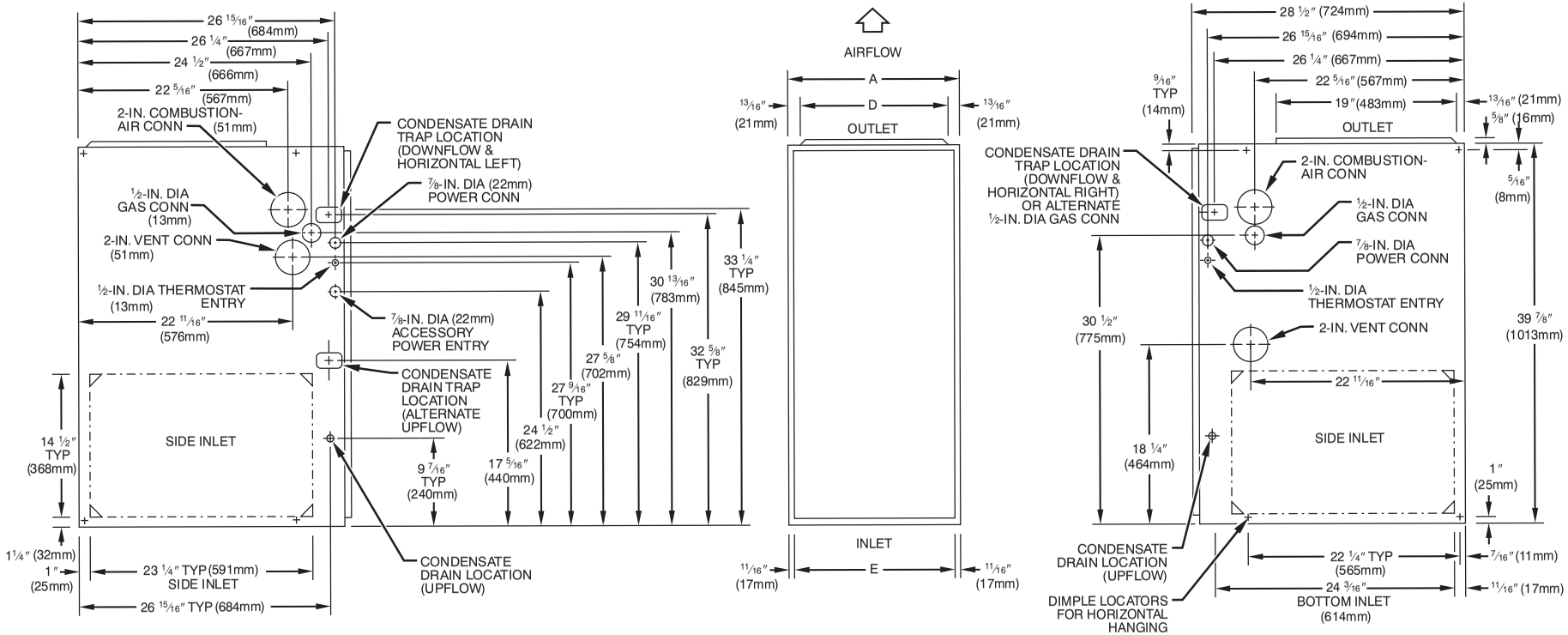

NOTES: 1. Minimum return-air openings at furnace, based on metal duct. If flex duct is used, see flex duct manufacturer's recommendation for equivalent diameters.

2. Minimum return-air opening at furnace:
   a. For 800 CFM 16-in . (406mm) round or 14 1/2 (368mm) x 12-in. (305mm) rectangle.
   b. For 1200 CFM 20-in . (508mm) round or 14 1/2 (368mm) x 19 1/2-in. (495mm) rectangle.
   c. For 1600 CFM 22-in .(559mm) round or 14 1/2 (368mm) x 23 1/4-in.(591mm)rectangle.
   d. For airflow requirements above 1800 CFM, see Air Delivery table in Product Data literature for specific use of single side inlets. The use of both side inlets, a combination of 1 side and the bottom, or the bottom only will ensure adequate return air openings for airflow requirements above 1800 CFM at 0.5 in. W.C. ESP.

UNIT SIZE	A	D	E
040-12 / 036040	17-1/2 (445)	15-7/8 (403)	16 (406)
060-12 / 036060	17-1/2 (445)	15-7/8 (403)	16 (406)
080-12 / 036080	17-1/2 (445)	15-7/8 (403)	16 (406)
080-16 / 048080	17-1/2 (445)	15-7/8 (403)	16 (406)
100-20 / 060100	21 (25.4)	19-3/8 (492)	19-1/2 (495)
120-20 / 060120	24-1/2 (622)	22-7/8 (581)	23 (584)

A08321

DOWNFLOW SUBBASE DIMENSIONS - IN. (MM)

FURNACE CASING WIDTH	FURNACE IN DOWNFLOW APPLICATION	PLENUM OPENING		FLOOR OPENING		HOLE NO. FOR WIDTH ADJUST–MENT
		A	B	C	D	
17-1/2 (445)	Furnace with or without Cased Coil Assembly or Coil Box	15–1/8 (384)	19 (483)	16-3/4 (425)	20–3/8 (518)	3
21 (533)	Furnace with or without Cased Coil Assembly or Coil Box	18–5/8 (473)	19 (483)	20–1/4 (514)	20–3/8 (518)	2
24-1/2 (622)	Furnace with or without Cased Coil Assembly or Coil Box	22-1/8 (562)	19 (483)	23-3/4 (603)	20–3/8 (518)	1

*The plenum should be constructed 1/4–in. (6 mm) smaller in width and depth than the plenum dimensions shown above.

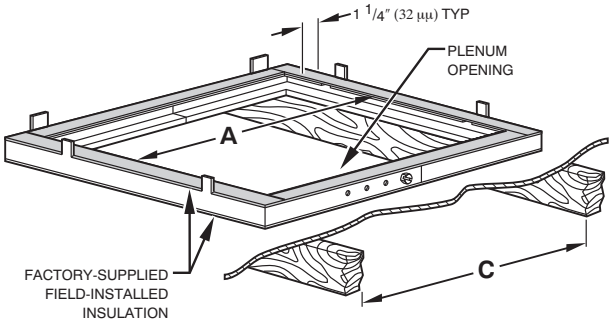

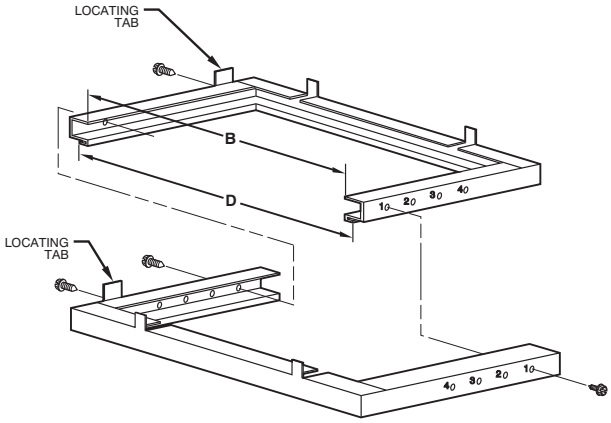

COMBUSTION-AIR PIPE FOR NON-DIRECT VENT (1-PIPE) APPLICATION (SIZES 040 THROUGH 120 ONLY)

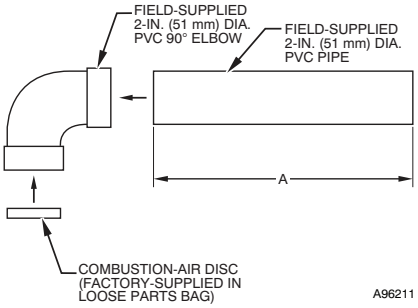

LENGTH OF STRAIGHT PIPE PORTION OF COMBUSTION AIR INLET PIPE ASSEMBLY - IN. (mm)

CASING WIDTH	A
17-1/2 (445 mm)	8-1/2 ± 1/2 (216 ± 13 mm)
21 (533 mm)	10-1/2 ± 1/2 (267 ± 13 mm)
24-1/2 (622 mm)	12 ± 1/2 (305 ± 13 mm)

CONCENTRIC VENT FOR DIRECT VENT (2-PIPE) APPLICATION (ALL MODEL SIZES)

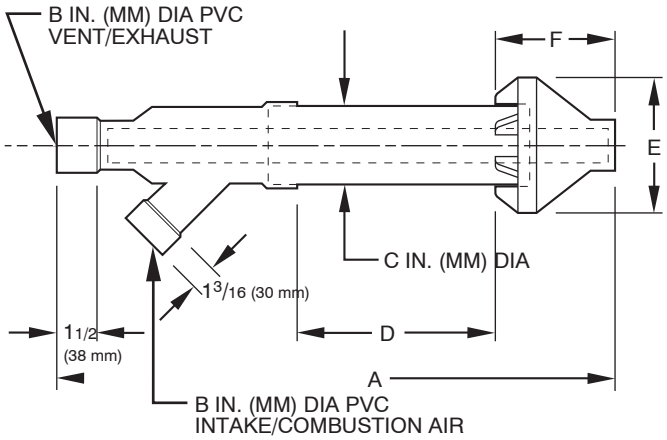

KIT PART NO.	A*	B	C	D†	E	F
KGAVT0701CVT	33–3/8 (848)	2 (51)	3–1/2 (89)	16–5/8 (422)	6–1/4 (159)	5–3/4 (146)
KGAVT0801CVT	38–7/8 (987)	3 (76)	4–1/2 (114)	21–1/8 (537)	7–3/8 (187)	6–1/2 (165)

*Dimension A will change accordingly as Dimension D is lengthened or shortened.

†Dimension D may be lengthened to 60–in. (1524 mm) maximum. Dimension D may also be shortened by cutting the pipes provided in the kit to 12– in. (305 mm) minimum.

CONDENSATE TRAP

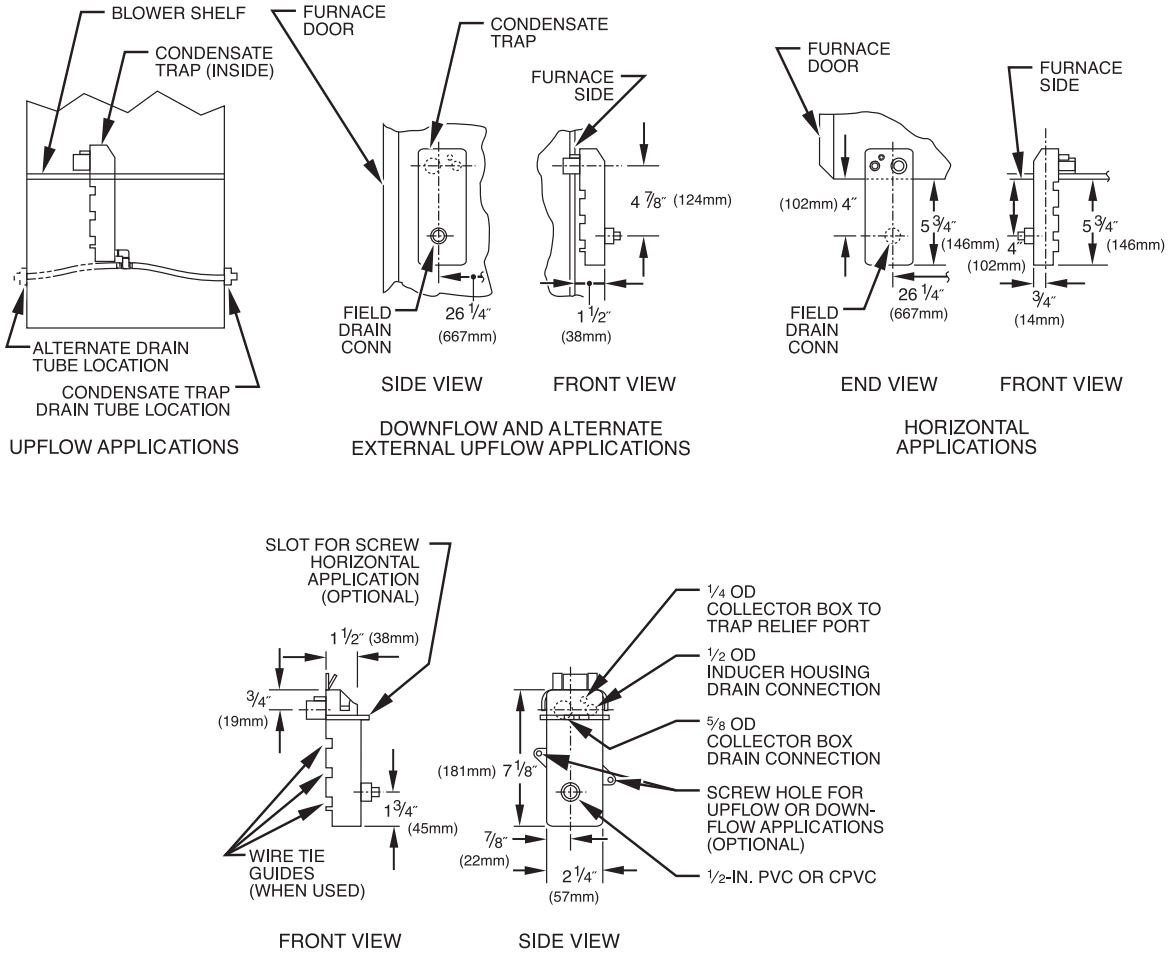

MEDIA FILTER CABINET

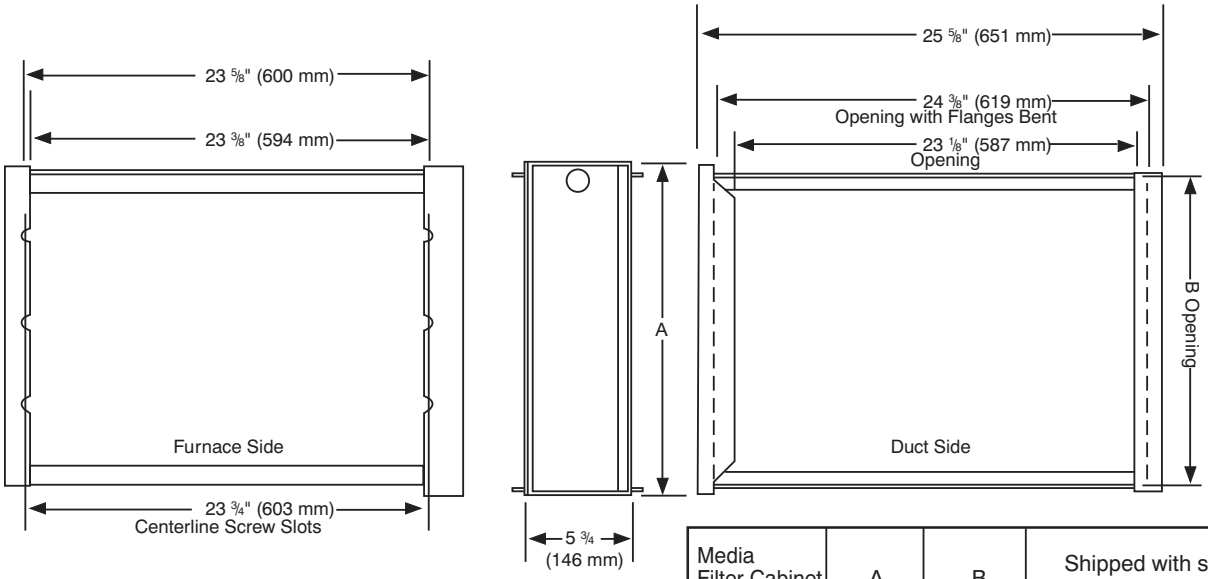

Media Filter Cabinet	A	B	Shipped with sizes
16" (406)	17" (432)	16" (406)	040-08, 040-12, 060-08, 060-12, 060-16, 080-12, 080-16
20" (508)	21" (533)	20" (508)	080-20, 100-16, 100-20
24" (610)	25" (635)	24" (610)	120-20, 140-20

A05186

CLEARANCE TO COMBUSTIBLES

INSTALLATION

- This forced air furnace is equipped for use with natural gas at altitudes 0 - 10,000 ft (0 - 3,050m), except 140 size furnaces are only approved for altitudes 0 - 7,000 ft. (0 - 2,135m).
- An accessory kit, supplied by the manufacturer, shall be used to convert to propane gas use or may be required for some natural gas applications.
- This furnace is for indoor installation in a building constructed on site. This furnace may be installed in a manufactured (mobile) home when stated on rating plate and using factory authorized kit..
- This furnace may be installed on combustible flooring in alcove or closet at **Minimum Inches Clearance To Combustible Construction** as described below.
- This furnace requires a special venting system. Refer to the installation instructions for parts list and method of installation. In the US this furnace is for use with schedule-40 PVC, PVC-DWV, CPVC, or ABS-DWV pipe, and must not be vented in common with other gas-fired appliances. In Canada, refer to installation instructions for vent materials. Construction through which vent/air intake pipes may be installed is maximum 24 inches (610 mm), minimum 3/4 inches (19 mm) thickness (including roofing materials).
- Cette fournaise à air pulsé est équipée pour utilisation avec gaz naturel et altitudes comprises entre 0 - 3,050m (0 - 10,000 pi),excepté queles fournaises de 140 taille sont pour altitudes comprises entre 0 - 2,135m (0 - 7,000pi).
- Utiliser une trousse de conversion, fournie par le fabricant, pour passer au gaz propane ou pour certaines installations au gaz naturel.
- Cette fournaise à air pulsé est pour installation à l´intérieur dans un bâtiment construit sur place. Cette fournaise à air pulse peut être installée dans une maison préfabriquée (maison mobile) si prescrit par la plaque signalétique et si'l on utilise une trousse specifiée par le fabricant.
- Cette fournaise peut être installée sur un plancher combustible dans un enfoncement ou un placard en observant les **Dégagement Minimum En Pouces Avec Éléments De Construction Combustibles.**
- Cette fournaise nécessite un système d´évacuation spécial. La méthode d´installation et la liste des pièces nécessaires figurent dans les instructions d´installation. Aux Etats-Unis, cette fournaise doit s´utiliser avec la tuyauterie des nomenclatures 40 PVC, PVC-DWV, CPVC, ou ABS-DWV et elle ne peut pas être ventilée conjointment avec d´autres appareils à gaz. Au Canada, referer aux instructions d'installation pour lex matériaux à ventiler. Épaisseur de la construction au travers de laquelle il est possible de faire passer les tuyaux d'aération (admission/évacuation): 24 po (610 mm) maximum, 3/4 po (19mm) minimum (y compris la toiture).

58MEB

For upflow and downflow applications, furnace must be installed level, or pitched within 1/2" (12.7mm) of level. For a horizontal application, the furnace must be pitched minimum 1/4" (6.35mm) to maximum of 1/2" (12.7mm) forward for proper drainage. See Installation Manual for IMPORTANT unit support details on horizontal applications.

Pour des applications de flux ascendant et descendant, la fournaise doit être installée de niveau ou inclinée à pas plus de 1/2" (12.7mm) du niveau. Pour une application horizontale, la fournaise doit être inclinée entre minimum 1/4" (6.35mm) et maximum 1/2" (12.7mm) du niveau pour le drainage approprié. En cas d´installation en position horizontale, consulter les renseignements IMPORTANTS sur le support dans le manuel d´installation.

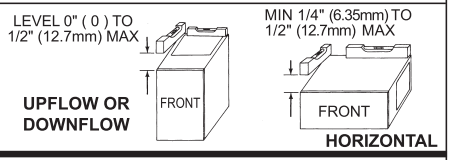

MINIMUM INCHES CLEARANCE TO COMBUSTIBLE CONSTRUCTION

ALL POSITIONS:

* Minimum front clearance for service 24 inches (610mm).

† † 140 size furnaces require 1 inch back clearance to combustible materials.

DOWNFLOW POSITIONS:

† For installation on combustible floors only when installed on special base No. KGASB0201ALL or NAHA01101SB, Coil Assembly, Part No. CAR, CAP, CNPV, CNRV or Coil Casing, Part No. KCAKC, or WENC or WTNC.

HORIZONTAL POSITIONS:

Line contact is permissible only between lines formed by intersections of top and two sides of furnace jacket, and building joists, studs, or framing.

§ Clearance shown is for air inlet and air outlet ends.

Ø 120 and 140 size furnaces require 1 inch bottom clearance to combustible materials.

DÉGAGEMENT MINIMUM EN POUCES AVEC ÉLÉMENTS DE CONSTRUCTION COMBUSTIBLES

POUR TOUS LES POSITIONS:

* Dégagement avant minimum de 24 po (610mm) pour l´entretien.

† † Pour les fournaises de 140 taille, 1 po (25mm) dégagement des matériaux combustibles est requis au-arriere.

POUR LA POSITION COURANT DESCENDANT:

† Pour l´installation sur le plancher combustible seulement quand on utilise la base spéciale, pièce nº KGASB0201ALL ou NAHA01101SB, l´ensemble serpentin, pièce nº CAR, CAP, CNPV, CNRV, ou le carter de serpentin, pièce nº KCAKC ou WENC ou WTNC.

POUR LA POSITION HORIZONTALE:

Le contact n´est permis qúentre les lignes formées par les intersections du dessus et des deuxcôtés de la chemise de la fournaise, et des solives, des montants ou de la charpente du bâtiment.

§ La distance indiquée concerne l´extrémité du tuyau d´arrivée d´air et l´extrémité du tuyau de sortie d´air.

Ø Pour les fournaises de 120 et 140 taille, 1 po (25mm) dégagement des matériaux combustibles est requis au-dessous.

335122-201 REV. B LIT TOP

This furnace is approved for UPFLOW, DOWNFLOW and HORIZONTAL installations.

Cette fournaise est approuvée pour l´installation HORIZONTALE et la circulation d´air VERS LE HAUT et VERS LE BAS.

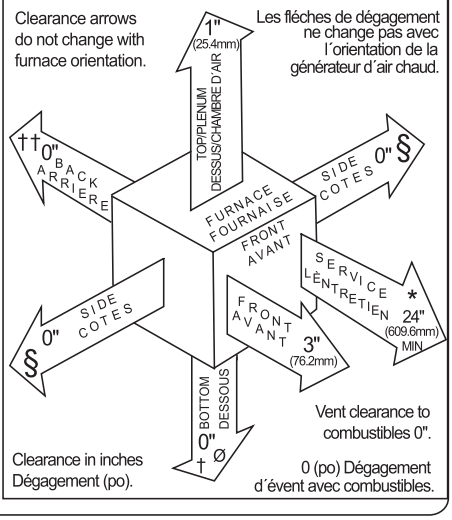

A08435

PERFORMANCE DATA

EFFICIENCY							
UNIT SIZE		040−12	060−12	080−12	080−16	100−20	120−20
CAPACITY* Direct Vent (2−pipe) (Shaded capacities are specified on the rating plate)	Upflow	38000	56000	75000	75000	94000	113000
	Downflow	38000	56000	75000	75000	94000	113000
	Horizontal	38000	56000	74000	75000	93000	112000
CAPACITY* Non−Direct vent (1−pipe)	Upflow	38000	56000	75000	75000	94000	113000
	Downflow	38000	56000	74000	75000	93000	112000
	Horizontal	38000	56000	74000	75000	93000	112000
AFUE* Direct Vent (2−pipe) Non−weatherized ICS	Upflow	95	93				
	Downflow	93.6	91.5				
	Horizontal	94.4	92.3				
AFUE* Non−Direct Vent (1−pipe) Non-weatherized ICS	Upflow	94.7	92.4				
	Downflow	93.3	91.4				
	Horizontal	94.1	91.4				
Input Btuh †		40000	60000	80000	80000	100000	120000
UNIT SIZE		040−12	060−12	080−12	080−16	100−20	120−20
CERTIFIED TEMPERATURE RANGE − °F (°C)		20−50 (11−28)	30−60 (17−53)	40−70 (22−39)	30−60 (17−33)	30−60 (17−33)	40−70 (22−39)
CERTIFIED EX STATIC PRESSURE (in. wc)	Heating	0.10	0.12	0.15	0.15	0.20	0.20
	Cooling	0.50	0.50	0.50	0.50	0.50	0.50
AIRFLOW (CFM)‡	Heating	845	1040	1180	1450	1890	2065
	Cooling	1260	1250	1240	1620	1635	1925

*Capacity and AFUE in accordance with U.S. Government DOE test procedures.

†Gas input ratings are certified for elevations to 2000 ft. (610 M). For elevations above 2000 ft. (610 M), reduce ratings 2% for each 1000 ft. (305 M) above sea level. In Canada, derate the unit 5% for elevations 2000 to 4500 ft. (610 to 1372 M) above sea level.

‡Airflow shown is for bottom only return−air supply with factory supplied 3/4−in. (19 mm) washable filter(s).
For air delivery above 1800 CFM, see Air Delivery table for other options.
An airflow reduction of up to 7% may occur when using the factory−specified 4 5/16−in. (110 mm) wide, high efficiency media filter.
For best furnace efficiency when using the 4−5/16−in. (110 mm) wide media filter, adjust the blower speed tap to near the mid−point of the rise range.

ICS − Isolated Combustion System.

AIR DELIVERY—CFM (WITH FILTER)

UNIT SIZE	RETURN-AIR SUPPLY	SPEED	EXTERNAL STATIC PRESSURE (in.wc)									
			0.1	0.2	0.3	0.4	0.5	0.6	0.7	0.8	0.9	1
040-12	SIDE/BOTTOM	5(Gry)	1425	1385	1350	1305	1260	1210	1165	1100	995	855
		4(Yel)	1215	1165	1130	1085	1025	970	905	840	795	730
		3(Blu)	1060	1005	960	910	845	790	715	660	610	560
		2(Org)	890	835	770	695	640	570	510	450	355	235
		1(Red)	880	675	570	475	425	335	245	-	-	-
060-12	SIDE/BOTTOM	5(Gry)	1430	1390	1345	1300	1250	1205	1150	1080	995	845
		3(Blu)	1240	1200	1145	1100	1040	975	915	860	790	730
		4(Yel)	1090	1030	980	935	850	800	730	665	590	525
		1(Red)	900	835	780	705	635	565	490	410	335	200
		2(Org)	805	620	440	380	300	-	-	-	-	-
080-12	SIDE/BOTTOM	5(Gry)	1400	1360	1325	1285	1240	1205	1160	1125	1075	1000
		3(Blu)	1340	1300	1265	1215	1180	1135	1100	1055	1015	965
		4(Yel)	1195	1160	1115	1065	1025	985	935	895	850	800
		1(Red)	1025	980	935	880	835	795	745	685	635	585
		2(Org)	855	800	745	680	635	560	515	460	420	360
080-16	SIDE/BOTTOM	5(Gry)	1720	1695	1690	1655	1620	1580	1540	1495	1465	1415
		3(Blu)	1565	1535	1530	1490	1450	1420	1375	1335	1295	1255
		4(Yel)	1330	1310	1270	1220	1180	1135	1095	1055	1010	970
		2(Org)	1210	1180	1135	1085	1035	995	950	910	865	810
		1(Red)	1110	1065	1005	960	910	865	820	770	720	670
100-20	SIDE/BOTTOM	5(Gry)	2070	2020	1985	1925	1890	1850	1795	1755	1690	1610
		3(Blu)	1815	1775	1730	1690	1635	1595	1555	1500	1460	1410
		4(Yel)	1580	1535	1480	1440	1380	1380	1340	1285	1235	1185
		2(Org)	1380	1325	1275	1220	1220	1165	1105	1060	1000	960
		1(Red)	1170	1105	1055	985	935	870	805	765	705	660
120-20	SIDE/BOTTOM	5(Gry)	2250	2205	2155	2110	2065	2020	1970	1925	1870	1790
		3(Blu)	2130	2085	2030	1980	1925	1880	1830	1775	1730	1675
		4(Yel)	1890	1835	1790	1740	1690	1640	1590	1535	1480	1435
		1(Red)	1640	1585	1525	1475	1425	1365	1315	1260	1200	1140
		2(Org)	1420	1370	1305	1255	1190	1135	1065	1010	940	880

‡ • Airflow shown is for bottom only return−air supply with factory supplied 3/4−in. (19 mm) washable filter(s).
For air delivery above 1800 CFM, see Air Delivery table for other options.
An airflow reduction of up to 7% may occur when using the factory−specified 4 5/16−in. (110 mm) wide, high efficiency media filter.
For best furnace efficiency when using the 4 5/16−in. (110 mm) wide media filter, adjust the blower speed tap to near the mid−point of the rise range.
For horizontal and downflow applications, use one side or bottom or bottom only as airflow reference.

COMBUSTION-AIR AND VENT PIPING FOR DIRECT VENT/2-PIPE (ALL SIZES) AND NON-DIRECT VENT/1-PIPE (SIZES 040 THROUGH 120 ONLY) APPLICATIONS

ALTITUDE FT (M)	UNIT SIZE (BTUH)	DIRECT VENT (2-PIPE) ONLY		NON-DIRECT VENT (1-PIPE) ONLY	NUMBER OF 90° ELBOWS					
		TERMINATION TYPE	PIPE DIA IN. (mm)*	PIPE DIA IN. (mm)*	1	2	3	4	5	6
0 to 2000 (0 to 610)	40,000	2 Pipe or 2-in Concentric	1 (25)	1 (25)	5 (1.5)	NA	NA	NA	NA	NA
			1-1/2 (38)	1-1/2 (38)	70 (21.3)	70 (21.3)	65 (19.8)	60 (18.3)	60 (18.3)	55 (16.8)
			2 (51)	2 (51)	70 (21.3)	70 (21.3)	70 (21.3)	70 (21.3)	70 (21.3)	70 (21.3)
	60,000	2 Pipe or 2-in Concentric	1-1/2 (38)	1-1/2 (38)	20 (6.1)	15 (4.6)	10 (3.0)	5 (1.5)	NA	NA
			2 (51)	2 (51)	70 (21.3)	70 (21.3)	70 (21.3)	70 (21.3)	70 (21.3)	70 (21.3)
	80,000	2 Pipe or 2-in Concentric	1-1/2 (38)	1-1/2 (38)	10 (3.0)	NA	NA	NA	NA	NA
			2 (51)	2 (51)	55 (16.8)	50 (15.2)	35 (10.7)	30 (9.1)	30 (9.1)	20 (6.1)
			2-1/2 (64)	2-1/2 (64)	70 (21.3)	70 (21.3)	70 (21.3)	70 (21.3)	70 (21.3)	70 (21.3)
	100,000	2 Pipe or 3-in Concentric	2 (51)	2 (51)	5 (1.5)	NA	NA	NA	NA	NA
			2-1/2 (64)	2-1/2 (64)	40 (12.2)	30 (9.1)	20 (6.1)	20 (6.1)	10 (3.0)	NA
			3 (76)	3 (76)	70 (21.3)	70 (21.3)	70 (21.3)	70 (21.3)	70 (21.3)	70 (21.3)
	120,000	2 Pipe or 3-in. Concentric	2-1/2 (64) one disk	2-1/2 (64)	10 (3.0)	NA	NA	NA	NA	NA
			3 (76)†	NA	45 (13.7)	40 (12.2)	35 (10.7)	30 (9.1)	25 (7.6)	20 (6.1)
			3 (76) † no disk	3 (76)†	70 (21.3)	70 (21.3)	70 (21.3)	70 (21.3)	70 (21.3)	70 (21.3)

ALTITUDE FT (M)	UNIT SIZE (BTUH)	DIRECT VENT (2-PIPE) ONLY		NON-DIRECT VENT (1-PIPE) ONLY	NUMBER OF 90° ELBOWS					
		TERMINATION TYPE	PIPE DIA IN. (mm)*	PIPE DIA IN. (mm)*	1	2	3	4	5	6
2001 to 3000 (610 to 914)	40,000	2 Pipe or 2-in Concentric	1-1/2 (38)	1-1/2 (38)	67 (20.4)	62 (18.9)	57 (17.4)	52 (15.8)	52 (15.8)	47 (14.3)
			2 (51)	2 (51)	70 (21.3)	70 (21.3)	70 (21.3)	70 (21.3)	70 (21.3)	70 (21.3)
	60,000	2 Pipe or 2-in Concentric	1-1/2 (38)	1-1/2 (38)	17 (5.2)	12 (3.7)	7 (2.1)	NA	NA	NA
			2 (51)	2 (51)	70 (21.3)	67 (20.4)	66 (20.1)	61 (18.6)	61 (18.6)	61 (18.6)
	80,000	2 Pipe or 2-in Concentric	2 (51)	2 (51)	49 (14.9)	44 (13.4)	30 (9.1)	25 (7.6)	25 (7.6)	15 (4.6)
			2-1/2 (64)	2-1/2 (64)	70 (21.3)	70 (21.3)	70 (21.3)	70 (21.3)	70 (21.3)	70 (21.3)
	100,000	2 Pipe or 3-in Concentric	2-1/2 (64)	2-1/2 (64)	35 (10.7)	26 (7.9)	16 (4.9)	16 (4.9)	6 (1.8)	NA
			3 (76)	3 (76)	70 (21.3)	70 (21.3)	70 (21.3)	70 (21.3)	66 (20.1)	61 (18.6)
	120,000	2 Pipe or 3-in. Concentric	3 (76)	NA	14 (4.3)	9 (2.7)	NA	NA	NA	NA
			NA	3 (76)†	63 (19.2)	62 (18.9)	62 (18.9)	61 (18.6)	61 (18.6)	61 (18.6)
			3 (76)† no disk	NA	70 (21.3)	70 (21.3)	63 (19.2)	56 (17.1)	50 (15.2)	43 (13.1)
			4 (102)† no disk	4 (102)† no disk	70 (21.3)	70 (21.3)	70 (21.3)	70 (21.3)	70 (21.3)	70 (21.3)

See notes at end of table.

COMBUSTION-AIR AND VENT PIPING FOR DIRECT VENT/2-PIPE (ALL SIZES) AND NON-DIRECT VENT/1-PIPE (SIZES 040 THROUGH 120 ONLY) APPLICATIONS (CON'T.)

ALTITUDE FT (M)	UNIT SIZE (BTUH)	DIRECT VENT (2-PIPE) ONLY		NON-DIRECT VENT (1-PIPE) ONLY	NUMBER OF 90° ELBOWS					
		TERMINATION TYPE	PIPE DIA IN (mm)*	PIPE DIA IN (mm)*	1	2	3	4	5	6
3001 to 4000 (914 to 1219)	40,000	2 Pipe or 2-in Concentric	1-1/2 (38)	1-1/2 (38)	64 (19.5)	59 (18.0)	54 (16.5)	49 (14.9)	48 (14.6)	43 (13.1)
			2 (51)	2 (51)	70 (21.3)	70 (21.3)	70 (21.3)	70 (21.3)	70 (21.3)	70 (21.3)
	60,000	2 Pipe or 2-in Concentric	1-1/2 (38)	1-1/2 (38)	16 (4.9)	11 (3.4)	6 (1.8)	NA	NA	NA
			2 (51)	2 (51)	68 (20.7)	63 (19.2)	62 (18.9)	57 (17.4)	57 (17.4)	56 (17.1)
	80,000	2 Pipe or 2-in Concentric	2 (51)	2 (51)	46 (14.0)	41 (12.5)	28 (8.5)	23 (7.0)	22 (6.7)	13 (4.0)
			2-1/2 (64)	2-1/2 (64)	70 (21.3)	70 (21.3)	70 (21.3)	70 (21.3)	70 (21.3)	70 (21.3)
	100,000	2 Pipe or 3-in Concentric	2-1/2 (64)	2-1/2 (64)	33 (10.1)	24 (7.3)	15 (4.6)	14 (4.3)	5 (1.5)	NA
			3 (76)	3 (76)	70 (21.3)	70 (21.3)	70 (21.3)	66 (20.1)	61 (18.6)	56 (17.1)
	120,000	2 Pipe or 3-in. Concentric	3 (76)† no disk	NA	65 (19.8)	58 (17.7)	51 (15.5)	44 (13.4)	38 (11.6)	31 (9.4)
			NA	3 (76)†	59 (18.0)	59 (18.0)	58 (17.7)	57 (17.4)	57 (17.4)	56 (17.1)
		4† no disk	4 (102)† no disk	4 (102) † no disk	70 (21.3)	70 (21.3)	70 (21.3)	70 (21.3)	70 (21.3)	70 (21.3)
ALTITUDE FT (M)	UNIT SIZE (BTUH)	DIRECT VENT (2-PIPE) ONLY		NON-DIRECT VENT (1-PIPE) ONLY	NUMBER OF 90° ELBOWS					
		TERMINATION TYPE	PIPE DIA IN. (mm)*	PIPE DIA IN. (mm)*	1	2	3	4	5	6
4001 to 5000‡ (1219 to 1524)	40,000	2 Pipe or 2-in Concentric	1-1/2 (38)	1-1/2 (38)	60 (18.3)	55 (16.8)	50 (15.2)	45 (13.7)	44 (13.4)	39 (11.9)
			2 (51)	2 (51)	70 (21.3)	70 (21.3)	70 (21.3)	70 (21.3)	70 (21.3)	70 (21.3)
	60,000	2 Pipe or 2-in Concentric	1-1/2 (38)	1-1/2 (38)	15 (4.6)	10 (3.0)	5 (1.5)	NA	NA	NA
			2 (51)	2 (51)	64 (19.5)	59 (18.0)	58 (17.7)	53 (16.2)	52 (15.8)	52 (15.8)
	80,000	2 Pipe or 2-in Concentric	2 (51)	2 (51)	44 (13.4)	39 (11.9)	26 (7.9)	21 (6.4)	20 (6.1)	11 (3.4)
			2-1/2 (64)	2-1/2 (64)	70 (21.3)	70 (21.3)	70 (21.3)	70 (21.3)	70 (21.3)	70 (21.3)
	100,000	2 Pipe or 3-in Concentric	2-1/2 (64)	2-1/2 (64)	31 (9.4)	22 (6.7)	13 (4.0)	12 (3.7)	NA	NA
			3 (76)	3 (76)	70 (21.3)	70 (21.3)	67 (20.4)	62 (18.9)	57 (17.4)	52 (15.8)
	120,000	2 Pipe or 3-in. Concentric	3 (76)† no disk	NA	53 (16.2)	46 (14.0)	40 (12.2)	33 (10.1)	26 (7.9)	20 (6.1)
			NA	3 (76)†	56 (17.1)	55 (16.8)	54 (16.5)	53 (16.2)	52 (15.8)	52 (15.8)
			4 (102)† no disk	4 (102)† no disk	70 (21.3)	70 (21.3)	70 (21.3)	70 (21.3)	70 (21.3)	70 (21.3)

See notes at end of table.

COMBUSTION-AIR AND VENT PIPING FOR DIRECT VENT/2-PIPE (ALL SIZES) AND NON-DIRECT VENT/1-PIPE (SIZES 040 THROUGH 120 ONLY) APPLICATIONS (CON'T.)

ALTITUDE FT (M)	UNIT SIZE (BTUH)	DIRECT VENT (2-PIPE) ONLY		NON-DIRECT VENT (1-PIPE) ONLY	NUMBER OF 90° ELBOWS					
		TERMINATION TYPE	PIPE DIA IN. (mm)*	PIPE DIA IN. (mm)*	1	2	3	4	5	6
5001 to 6000‡ (1524 to 1829)	40,000	2 Pipe or 2-in Concentric	1-1/2 (38)	1-1/2 (38)	57 (17.4)	52 (15.8)	47 (14.3)	42 (12.8)	40 (12.2)	35 (10.7)
			2 (51)	2 (51)	70 (21.3)	70 (21.3)	70 (21.3)	70 (21.3)	70 (21.3)	70 (21.3)
	60,000	2 Pipe or 2-in Concentric	1-1/2 (38)	1-1/2 (38)	14 (4.3)	9 (2.7)	NA	NA	NA	NA
			2 (51)	2 (51)	60 (18.3)	55 (16.8)	54 (16.5)	49 (14.9)	48 (14.6)	47 (14.3)
	80,000	2 Pipe or 2-in Concentric	2 (51)	2 (51)	41 (12.5)	36 (11.0)	23 (7.0)	18 (5.5)	17 (5.2)	8 (2.4)
			2-1/2 (64)	2-1/2 (64)	70 (21.3)	70 (21.3)	70 (21.3)	70 (21.3)	70 (21.3)	70 (21.3)
	100,000	2 Pipe or 3-in Concentric	2-1/2 (64)	2-1/2 (64)	29 (8.8)	21 (6.4)	12 (3.7)	11 (3.4)	NA	NA
			3 (76)	3 (76)	70 (21.3)	67 (20.4)	62 (18.9)	57 (17.4)	52 (15.8)	47 (14.3)
	120,000	2 Pipe or 3-in. Concentric	3 (76)† no disk	NA	42 (12.8)	35 (10.7)	29 (8.8)	22 (6.7)	15 (4.6)	9 (2.7)
			NA	3 (76)†	53 (16.2)	52 (15.8)	50 (15.2)	49 (14.9)	48 (14.6)	47 (14.3)
			4 (102)† no disk	4 (102)† no disk	70 (21.3)	70 (21.3)	70 (21.3)	70 (21.3)	70 (21.3)	70 (21.3)

ALTITUDE FT (M)	UNIT SIZE (BTUH)	DIRECT VENT (2-PIPE) ONLY		NON-DIRECT VENT (1-PIPE) ONLY	NUMBER OF 90° ELBOWS					
		TERMINATION TYPE	PIPE DIA IN. (mm)*	PIPE DIA IN. (mm)*	1	2	3	4	5	6
6001 to 7000‡ (1829 to 2134)	40,000	2 Pipe or 2-in Concentric	1-1/2 (38)	1-1/2 (38)	53 (16.2)	48 (14.6)	43 (13.1	38 (11.6)	37 (11.3)	32 (9.8)
			2 (51)	2 (51)	70 (21.3)	70 (21.3)	68 (20.7)	67 (20.4)	66 (20.1)	64 (19.5)
	60,000	2 Pipe or 2-in Concentric	1-1/2 (38)	1-1/2 (38)	13 (4.0)	8 (2.4)	NA	NA	NA	NA
			2 (51)	2 (51)	57 (17.4)	52 (15.8)	50 (15.2)	45 (13.7)	44 (13.4)	43 (13.1)
	80,000	2 Pipe or 2-in Concentric	2 (51)	2 (51)	38 (11.6)	33 (10.1)	21 (6.4)	16 (4.9)	15 (4.6)	6 (1.8)
			2-1/2 (64)	2-1/2 (64)	70 (21.3)	70 (21.3)	68 (20.7)	67 (20.4)	66 (20.1)	64 (19.5)
	100,000	2 Pipe or 3-in Concentric	2-1/2 (64)	2-1/2 (64)	27 (8.2)	19 (5.8)	10 (3.0)	9 (2.7)	NA	NA
			3 (76)	3 (76)	68 (20.7)	63 (19.2)	58 (17.7)	53 (16.2)	48 (14.6)	43 (13.1)
	120,000	2 Pipe or 3-in. Concentric	3 (76)† no disk	NA	31 (9.4)	24 (7.3)	18 (5.5)	11 (3.4)	NA	NA
			NA	3 (76)†	49 (14.9)	48 (14.6)	47 (14.3)	45 (13.7)	44 (13.4)	43 (13.1)

See notes at end of table.

58MEB

COMBUSTION-AIR AND VENT PIPING FOR DIRECT VENT/2-PIPE (ALL SIZES) AND NON-DIRECT VENT/1-PIPE (SIZES 040 THROUGH 120 ONLY) APPLICATIONS (CON'T.)

ALTITUDE FT (M)	UNIT SIZE (BTUH)	DIRECT VENT (2-PIPE) ONLY		NON-DIRECT VENT (1-PIPE) ONLY	NUMBER OF 90° ELBOWS					
		TERMINATION TYPE	PIPE DIA IN. (mm)*	PIPE DIA IN. (mm)*	1	2	3	4	5	6
7001 to 8000‡ (2134 to 2438)	40,000	2 Pipe or 2-in Concentric	1-1/2 (38)	1-1/2 (38)	49 (14.9)	44 (13.4)	39 (11.9)	34 (10.4)	33 (10.1)	28 (6.5)
			2 (51)	2 (51)	66 (20.1)	65 (19.8)	63 (19.2)	62 (18.9)	60 (18.3)	59 (18.0)
	60,000	2 Pipe or 2-in Concentric	1-1/2 (38)	1-1/2 (38)	12 (3.7)	7 (2.1)	NA	NA	NA	NA
			2 (51)	2 (51)	53 (16.2)	48 (14.6)	46 (14.0)	41 (12.5)	40 (12.2)	38 (11.6)
	80,000	2 Pipe or 2-in Concentric	2 (51)	2 (51)	36 (11.0)	31 (9.4)	19 (5.8)	14 (4.3)	12 (3.7)	NA
			2-1/2 (64)	2-1/2 (64)	66 (20.1)	65 (19.8)	63 (19.2)	62 (18.9)	60 (18.3)	59 (18.0)
	100,000	2 Pipe or 3-in Concentric	2-1/2 (64)	2-1/2 (64)	25 (7.6)	17 (5.2)	8 (2.4)	7 (2.1)	NA	NA
			3 (76)	3 (76)	63 (19.2)	58 (17.7)	53 (16.2)	48 (14.6)	43 (13.1)	38 (11.6)
	120,000	2 Pipe or 3-in. Concentric	3 (76)† no disk	NA	20 (6.1)	13 (4.0)	7 (2.1)	NA	NA	NA
			NA	3 (76)†	46 (14.0)	44 (13.4)	43 (13.1)	41 (12.5)	40 (12.2)	38 (11.6)
			4 (102)† no disk	4 (102)† no disk	61 (18.6)	56 (17.1)	51 (15.5)	46 (14.0)	41 (12.5)	36 (11.0)
ALTITUDE FT (M)	UNIT SIZE (BTUH)	DIRECT VENT (2-PIPE) ONLY		NON-DIRECT VENT (1-PIPE) ONLY	NUMBER OF 90° ELBOWS					
		TERMINATION TYPE	PIPE DIA IN. (mm)*	PIPE DIA IN. (mm)*	1	2	3	4	5	6
8001 to 9000‡ (2438 to 2743)	40,000	2 Pipe or 2-in Concentric	1-1/2 (38)	1-1/2 (38)	46 (14.0)	41 (12.5)	36 (11.0)	31 (9.4)	29 (8.8)	24 (7.3)
			2 (51)	2 (51)	62 (18.9)	60 (18.3)	58 (17.7)	56 (17.1)	55 (16.8)	53 (16.2)
	60,000	2 Pipe or 2-in Concentric	1-1/2 (38)	1-1/2 (38)	11 (3.4)	6 (1.8)	NA	NA	NA	NA
			2 (51)	2 (51)	49 (14.9)	44 (13.4)	42 (12.8)	37 (11.3)	35 (10.7)	34 (10.4)
	80,000	2 Pipe or 2-in Concentric	2 (51)	2 (51)	33 (10.1)	28 (8.5)	17 (5.2)	12 (3.7)	10 (3.0)	NA
			2-1/2 (64)	2-1/2 (64)	62 (18.9)	60 (18.3)	58 (17.7)	56 (17.1)	55 (16.8)	53 (16.2)
	100,000	2 Pipe or 3-in Concentric	2-1/2 (64)	2-1/2 (64)	23 (7.0)	15 (4.6)	7 (2.1)	5 (1.5)	NA	NA
			3 (76)	3 (76)	59 (18.0)	54 (16.5)	49 (14.9)	44 (13.4)	39 (11.9)	34 (10.4)
	120,000	2 Pipe or 3-in. Concentric	3 (76)† no disk	NA	10 (3.0)	NA	NA	NA	NA	NA
			NA	3 (76)†	43 (13.1)	41 (12.5)	39 (11.9)	37 (11.3)	35 (10.7)	34 (10.4)
			4 (102)† no disk	4† no disk	35 (10.7)	30 (9.1)	25 (7.6)	20 (6.1)	15 (4.6)	10 (3.0)

See notes at end of table.

COMBUSTION-AIR AND VENT PIPING FOR DIRECT VENT/2-PIPE (ALL SIZES) AND NON-DIRECT VENT/1-PIPE (SIZES 040 THROUGH 120 ONLY) APPLICATIONS (CON'T.)

ALTITUDE FT (M)	UNIT SIZE (BTUH)	DIRECT VENT (2-PIPE) ONLY		NON-DIRECT VENT (1-PIPE) ONLY	NUMBER OF 90° ELBOWS					
		TERMINATION TYPE	PIPE DIA IN. (mm)*	PIPE DIA IN. (mm)*	1	2	3	4	5	6
9001 to 10,000‡ (2743 to 3048)	40,000	2 Pipe or 2-in	1-1/2 (38)	1-1/2 (38)	42 (12.8)	37 (11.3)	32 (9.8)	27 (8.2)	25 (7.6)	20 (6.1)
		Concentric	2 (51)	2 (51)	57 (17.4)	55 (16.8)	53 (16.2)	51 (15.5)	49 (14.9)	47 (14.3)
	60,000	2 Pipe or 2-in Concentric	2 (51)	2 (51)	45 (13.7)	40 (12.2)	38 (11.6)	33 (10.1)	31 (9.4)	29 (8.8)
	80,000	2 Pipe or 2-in Concentric	2 (51)	2 (51)	30 (9.1)	25 (7.6)	14 (4.3)	9 (2.7)	7 (2.1)	NA
			2-1/2 (64)	2-1/2 (64)	57 (17.4)	55 (16.8)	53 (16.2)	51 (15.5)	49 (14.9)	47 (14.3)
	100,000	2 Pipe or 3-in Concentric	2-1/2 (64)	2-1/2 (64)	21 (6.4)	13 (4.0)	5 (1.5)	NA	NA	NA
			3 (76)	3 (76)	54 (16.5)	49 (14.9)	44 (13.4)	39 (11.9)	34 (10.4)	29 (8.8)
	120,000	2 Pipe or 3-in. Concentric	NA	3 (76)†	39 (11.9)	37 (11.3)	35 (10.7)	33 (10.1)	31 (9.4)	29 (8.8)
			4 (102)† no disk	4 (102)† no disk	10 (3.0)	5 (1.5)	NA	NA	NA	NA

* Disk usage-Unless otherwise specified, use perforated disk assembly (factory-supplied in loose parts bag).

If one disk is stated, separate 2 halves of perforated disk assembly and use shouldered disk half. When using shouldered disk half, install screen side toward inlet box.

† Wide radius elbow.

‡ Vent sizing for Canadian installations over 4500 ft (1370 M) above sea level are subject to acceptance by the local authorities having jurisdiction. NA-Not Allowed; pressure switch will not make.

NOTES:

1. Do not use pipe size greater than those specified in table or incomplete combustion, flame disturbance, or flame sense lockout may occur.
2. Size both the combustion-air and vent pipe independently, then use the larger diameter for both pipes.
3. Assume two 45° elbows equal one 90° elbow. Wide radius elbows are desirable and may be required in some cases.
4. Elbows and pipe sections within the furnace casing and at the vent termination should not be included in vent length or elbow count.
5. The minimum pipe length is 5 ft (1.5 M) for all applications.
6. Use 3-in. (76 mm) diameter vent termination kit for installations requiring 4-in (102 mm) diameter pipe.

MAXIMUM ALLOWABLE EXPOSED VENT PIPE LENGTH - FT (M) WITH AND WITHOUT INSULATION IN WINTER DESIGN TEMPERATURE AMBIENT*

FURNACE SIZE	WINTER DESIGN TEMPERATURE °F (°C)	MAX PIPE DIAMETER IN (mm)	WITHOUT INSULATION FT (M)	WITH 3/8–IN. OR THICKER INSULATION† FT (M)
040	20 (−7)	1.5 (38)	51 (16)	70 (21)
	0 (−18)	1.5 (38)	28 (9)	70 (21)
	−20 (−29)	1.5 (38)	16 (5)	70 (21)
	20 (−7)	2 (51)	45 (14)	70 (21)
	0 (−18)	2 (51)	22 (7)	70 (21)
	−20 (−29)	2 (51)	10 (3)	58 (18)
060	20 (−7)	2 (51)	65 (20)	70 (21)
	0 (−18)	2 (51)	35 (11)	70 (21)
	−20 (−29)	2 (51)	20 (6)	70 (21)
080	20 (−7)	2 (51)	55 (17)	55 (17)
	0 (−18)	2 (51)	48 (15)	55 (17)
	−20 (−29)	2 (51)	30 (9)	55 (17)
	20 (−7)	2.5 (64)	70 (21)	70 (21)
	0 (−18)	2.5 (64)	47 (14)	70 (21)
	−20 (−29)	2.5 (64)	28 (9)	70 (21)
100	20 (−7)	2.5 (64)	40 (12)	40 (12)
	0 (−18)	2.5 (64)	40 (12)	40 (12)
	−20 (−29)	2.5 (64)	38 (12)	40 (12)
	20 (−7)	3 (76)	70 (21)	70 (21)
	0 (−18)	3 (76)	50 (15)	70 (21)
	−20 (−29)	3 (76)	28 (9)	70 (21)
120	20 (−7)	3 (76)	70 (21)	70 (21)
	0 (−18)	3 (76)	61 (19)	70 (21)
	−20 (−29)	3 (76)	37 (11)	70 (21)
	20 (−7)	4 (102)	70 (21)	70 (21)
	0 (−18)	4 (102)	48 (15)	70 (21)
	−20 (−29)	4 (102)	23 (7)	70 (21)

* Pipe length ft (M) specified for maximum pipe lengths located in unconditioned spaces. Pipes located in unconditioned space cannot exceed total allowable pipe length as specified in Table.

† Insulation thickness based on R value of 3.5 per in.

ELECTRICAL DATA

UNIT SIZE		040−12	~~060−12~~	~~080−12~~	~~080−16~~	~~100−20~~	~~120−20~~
UNIT VOLTS − HERTZ − PHASE		115−60−1	115−60−1	115−60−1	115−60−1	115−60−1	115−60−1
MAXIMUM UNIT AMPS		8	9.4	9.4	9.6	12.1	12.1
UNIT AMPACITY		10.8	12.5	12.5	12.8	15.9	15.9
MINIMUM WIRE SIZE		14	14	14	14	12	12
MAXIMUM WIRE LENGTH − FT. (M)		34 (10.3)	29 (8.8)	29 (8.8)	29 (8.8)	36 (10.9)	36 (10.9)
MAXIMUM FUSE OR CKT BKR (Amps)**		15	15	15	15	20	20
TRANSFORMER (24v)		40va					
EXTERNAL CONTROL POWER AVAILABLE	HEATING	12va					
	COOLING	21va					
AIR CONDITIONING BLOWER RELAY		24v Standard					

TYPICAL WIRING SCHEMATIC

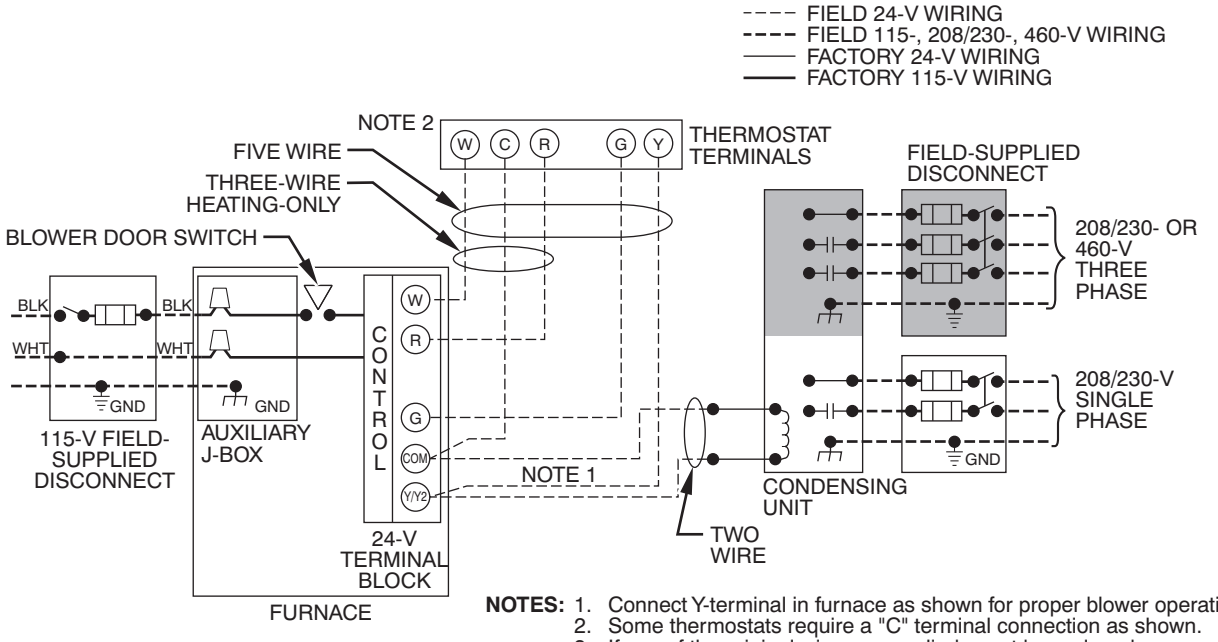

NOTES: 1. Connect Y-terminal in furnace as shown for proper blower operation.
2. Some thermostats require a "C" terminal connection as shown.
3. If any of the original wire, as supplied, must be replaced, use same type or equivalent wire.

A99440

TYPICAL INSTALLATIONS

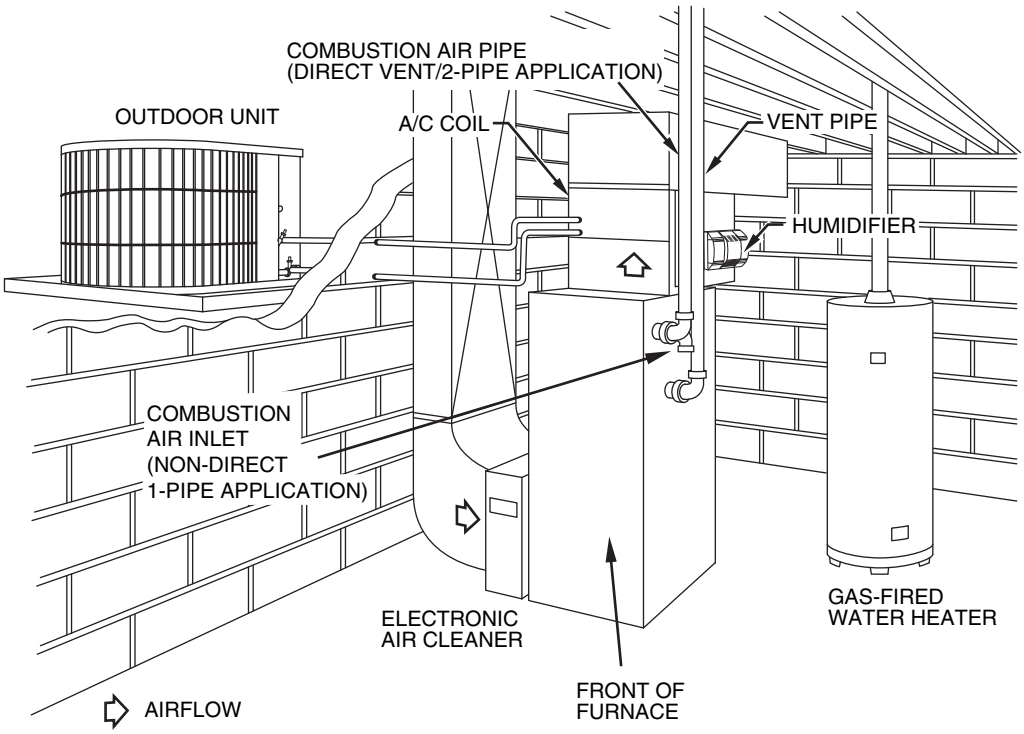

A05064

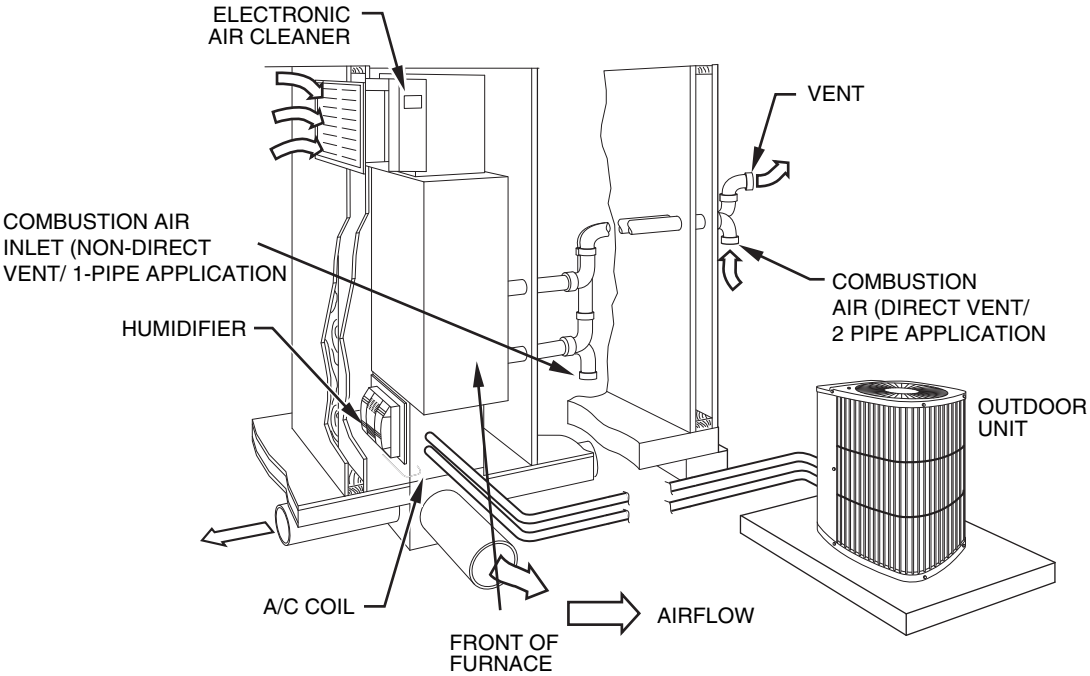

A05065

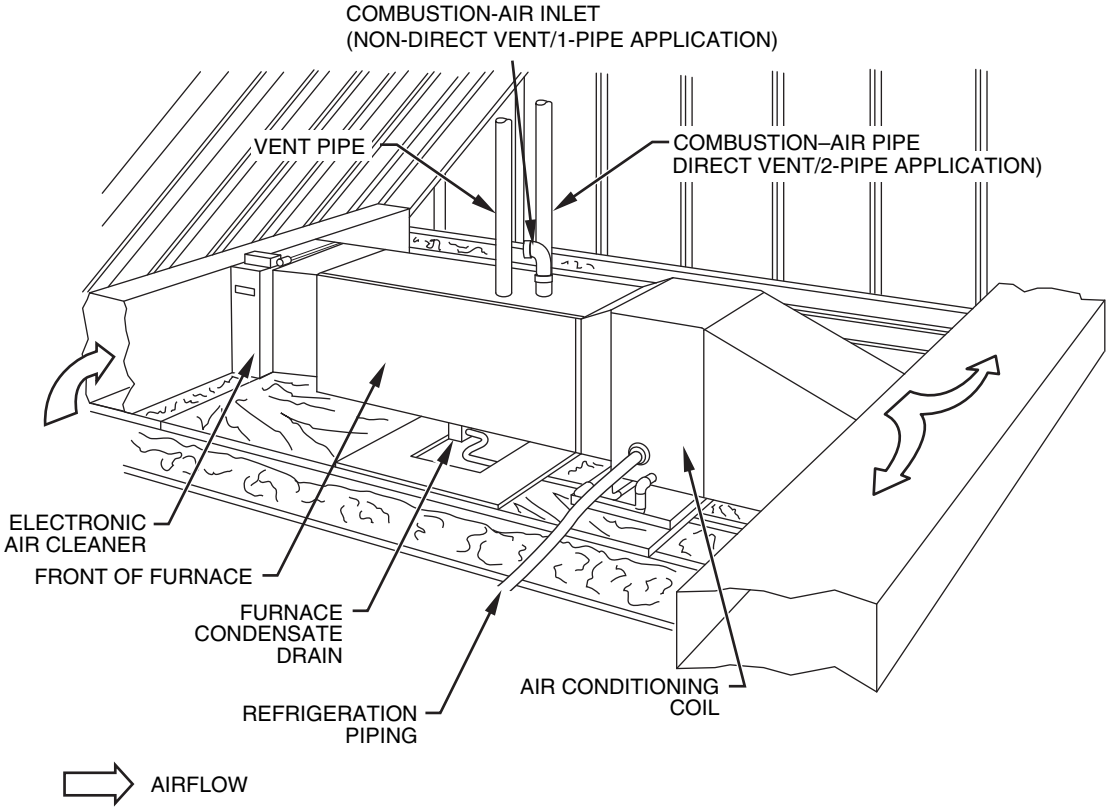

A05066

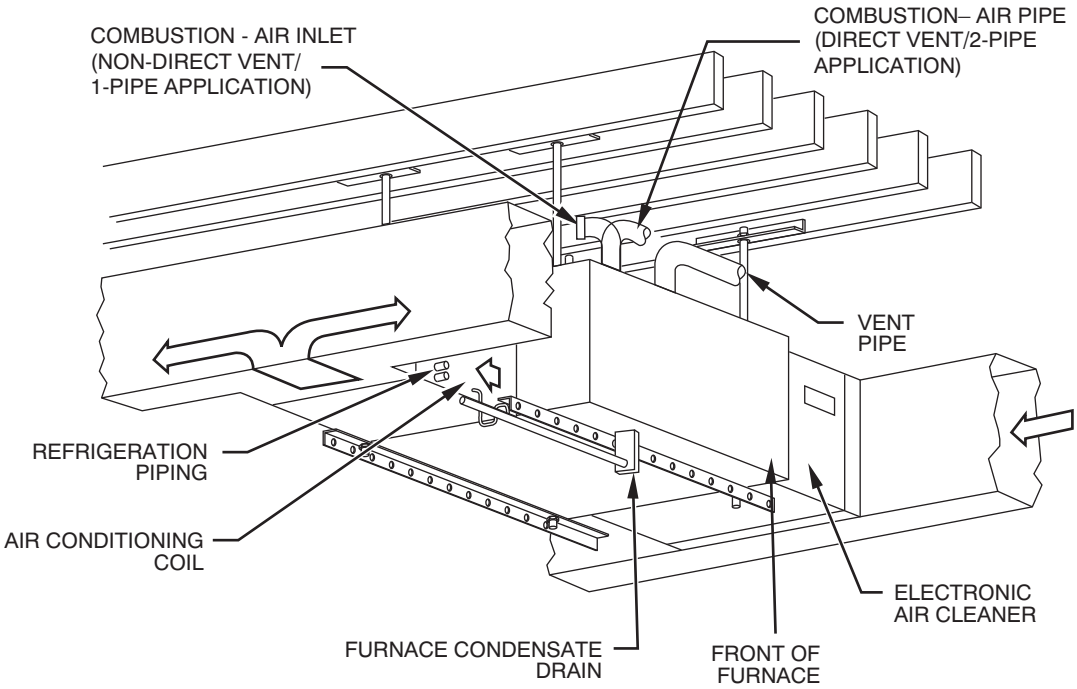

A08422

GUIDE SPECIFICATIONS

Performance Boost 90

Single-Stage/Deluxe Gas Furnace

58MEB

GENERAL

System Description

Furnish a _____ (4-way multipoise) fixed capacity gas-fired condensing furnace for use with natural gas or propane (factory authorized conversion kit required for propane); furnish cold air return plenum; furnish external medial cabinet for use with accessory media filter or standard filter.

Quality Assurance

Unit will be designed, tested and constructed to the current ANSI Z 21.47/CSA 2.3 design standard for gas-fired central furnaces.

Unit will be 3rd party certified by CSA to the current ANSI Z 21.47/CSA 2.3 design standard for gas-fired central furnaces.

Unit will carry the CSA Blue Star® and Blue Flame® labels.

Unit efficiency testing will be performed per the current DOE test procedure as listed in the Federal Register.

Unit will be certified for capacity and efficiency and listed in the latest GAMA Consumer's Directory of Certified Efficiency Ratings.

Unit will carry the current Federal Trade Commission Energy Guide efficiency label.

Delivery, Storage and Handling

Unit will be shipped as single package only and is stored and handled per unit manufacturer's recommendation.

Warranty (for inclusion by specifying engineer)

U.S. and Canada only. Warranty certificate available upon request.

PRODUCTS

Equipment

Components shall include: slow-opening gas valve to reduce ignition noise, regulate gas flow, with electric switch gas shut-off; flame proving sensor, hot surface igniter, pressure switch assembly verifies inducer operation; flame rollout switch, drain tubing and installed condensate drain trap, blower and inducer assembly, 40va transformer; low-voltage (heating) (heating/ cooling) thermostat.

Blower Wheel and Blower Motor

Galvanized blower wheel shall be centrifugal type, statically and dynamically balanced. Blower motor of ECM type shall be permanently lubricated with sealed bearings, of _____ hp, and shall be multiple-speed direct drive. Blower motor shall be soft mounted to the blower scroll to reduce vibration transmission.

Filters

Furnace shall have reusable-type filters. Filter shall be _____ in (x) _____in. An accessory high efficiency Media Filter is available as an option. _____Media Filter.

Casing

Casing shall be of .030 in. (.03 mm) thickness minimum, pre-painted galvanized steel.

Inducer Motor

Inducer motor shall be soft mounted to reduce vibration transmission.

Primary Heat Exchangers

Primary Heat exchangers shall be 3-Pass 20 gauge corrosion resistant aluminized steel of fold-and-crimp sectional design, which operates under negative pressure.

Secondary Heat Exchangers

Secondary Heat exchangers shall be of a flow-through design having a patented interior laminate coating of polypropylene for greater corrosion resistance with fold-and-crimp design, which operates under negative pressure.

Controls

Controls shall include a microprocessor based integrated electronic control board with at least 11 service troubleshooting codes displayed via diagnostic flashing LED light on the control, has ability to store fault codes, when activated a self-test feature checks all major functions of the furnace within one minute, and a replaceable automotive-type circuit protection fuse. Multiple operational settings available including separate blower speeds. Cooling airflow will be selectable between 350 or 400 CFM per ton of air conditioning. Features will also include temporary reduced airflow in the cooling mode for improved dehumidification when a Thermidistat® is selected as the thermostat.

Operating Characteristics

Heating Capacity shall be_____Btuh input;_____Btuh output capacity. Fuel Gas Efficiency shall be 93% AFUE. Air delivery shall be_____ CFM minimum at 0.50 in. wc. external static pressure. Dimensions shall be: depth_____in.; width_____in.; height _____in. (casing only). Height shall be_____in. with A/C coil and_____in. overall with plenum.

Electrical Requirements

Electrical supply shall be 115 volts, 60 Hz, single-phase (nominal). Minimum wire size shall be_____AWG; maximum fuse size or HACR-type, designated circuit breaker shall be _____Amps.

Special Features

Refer to section of the product data sheet identifying accessories and descriptions for specific features and available enhancements.

Copyright 2010 Carrier Corp. • 7310 W. Morris St. • Indianapolis, IN 46231
Printed in U.S.A. Edition Date: 09/10 **Catalog No: 58MEB–03PD**

Manufacturer reserves the right to change, at any time, specifications and designs without notice and without obligations.
Replaces: 58MEB–02PD