**KGBPN4401VSP**

**Gas Conversion Kit Propane−to−Natural for Variable Speed, Condensing and Non−Condensing Gas Furnaces**

# Installation Instructions

**NOTE**: Read the entire instruction manual before starting the installation.

## SAFETY CONSIDERATION

### ⚠ WARNING

**FIRE, EXPLOSION, ELECTRICAL SHOCK, AND CARBON MONOXIDE POISONING HAZARD**

Failure to follow this warning could result in personal injury or death.

This conversion kit shall be installed by a qualified service agency in accordance with the manufacturer's instructions and all applicable codes and requirements of the authority having jurisdiction. If the information in these instructions is not followed exactly, a fire, explosion, or production of carbon monoxide could result causing property damage, personal injury, or loss of life. The qualified service agency is responsible for the proper installation of this furnace with this kit. The installation is not proper and complete until the operation of the converted appliance is checked as specified in the manufacturer's instructions supplied with the kit.

### ⚠ AVERTISSEMENT

**LE FEU, L'EXPLOSION, CHOC ELECTRIQUE, ET MONOXYDE DE CARBONE EMPOISONNER**

Cette trousse de conversion doit être installée par un servie d'entretien qualifié, selon les instructions du fabricant et selon toutes les exigences et tous les codes pertinents de l'autorité compétente. Assurezvous de bien suivre les instructions dans cette notice pour réduire au minimum le risque d'incendie, d'explosion ou la production de monoxyde de carbone pouvant causer des dommages matériels, de blessure ou la mort. Le service d'entretien qualifié est responsable de l'installation de cette trousse. L'installation n'est pas adéquate ni complète tant que le bon fonctionnement de l'appereil converti n'a pas été vérfié selon les instructions du fabricant fornies avec la trousse.

Installing and servicing heating equipment can be hazardous due to gas and electrical components. Only trained and qualified personnel should install, repair, or service heating equipment.

Untrained personnel can perform basic maintenance functions such as cleaning and replacing air filters. Trained service personnel must perform all other operations. When working on heating equipment, observe precautions in the literature, on tags, and on labels attached to or shipped with the unit, and other safety precautions that may apply.

Follow all safety codes. In the United States, follow all safety codes including the current edition of the National Fuel Gas Code (NFGC) NFPA No. 54/ANSI Z223.1. In Canada, refer to the current edition of the National Standard of Canada, Natural Gas and Propane Installation Codes (NSCNGPIC), CAN/CSA−B149.1 and .2. Wear safety glasses and work gloves. Have a fire extinguisher available during start−up, adjustment steps, and service calls.

Recognize safety information. This is the safety−alert symbol ⚠. When you see this symbol on the furnace and in instructions or manuals, be alert to the potential for personal injury. Understand the signal words DANGER, WARNING, CAUTION and NOTE. The words DANGER, WARNING, and CAUTION are used with the safety alert symbol. DANGER identifies the most serious hazards which **will** result in severe personal injury or death. WARNING signifies a hazard which **could** result in personal injury or death. CAUTION is used to identify unsafe practices which **may** result in minor personal injury or product and property damage. NOTE is used to highlight suggestions which **will** result in enhanced installation, reliability, or operation.

## INTRODUCTION

### ⚠ WARNING

**FIRE, EXPLOSION, ELECTRICAL SHOCK AND CARBON MONOXIDE POISONING HAZARD**

Failure to follow instructions could result in personal injury, death or property damage.

Improper installation, adjustment, alteration, service, maintenance, or use can cause carbon monoxide poisoning, explosion, fire, electrical shock, or other conditions, which could result in personal injury or death. Consult your distributor or branch for information or assistance. The qualified installer or agency must use only factory−authorized kits or accessories when servicing this product.

### ⚠ WARNING

**FIRE, EXPLOSION, ELECTRICAL SHOCK HAZARD**

Failure to follow this warning could result in personal injury, death or property damage.

Gas supply MUST be shut off before disconnecting electrical power and proceeding with conversion.

## ⚠ WARNING

**ELECTRICAL SHOCK, FIRE OR EXPLOSION HAZARD**

Failure to follow this warning could result in personal injury, death or property damage.

Before installing, modifying, or servicing system, main electrical disconnect switch must be in the OFF position and install a lockout tag. There may be more than one disconnect switch. Lock out and tag switch with a suitable warning label. Verify proper operation after servicing.

This instruction covers the installation of gas conversion kit Part No. KGBPN4401VSP to convert the following furnaces from Propane gas usage to natural gas usage. See appropriate section for your furnace type.

**Section 1**—59MN7 & 987M 4-Way Multipoise, Hot Surface Ignition, Modulating Condensing Furnaces. This kit is designed for use in furnaces with 60,000 through 120,000 Btuh gas input rates.

**Section 2**—59TN6, 59TP6, 926T, 986T, PG96V_T, 4-Way Multipoise, Hot Surface Ignition, 2-Stage, Variable-Speed Condensing Furnaces. 59TN6 applies to 60,000 to 120,000 Btuh gas input rates. 986T and PG96V_T applies to 40,000 to 120,000 Btuh gas input rates.

**Section 3**—58CTW, 58CVA, 58CVX, 314AAV, 315AAV, 315JAV, PG8MVA, PG8JVA, 33.3-In.(846 mm) High, Induced-Combustion, Hot- Surface Ignition, 2-Stage, Variable-Speed, Non-Condensing Furnaces. This kit is designed for use in furnaces with 42,000 through 154,000 Btuh gas input rates.

## DESCRIPTION AND USAGE

See Table 1 for kit contents. This kit is designed for use in the furnaces listed above. To accommodate many different furnace models, more parts are shipped in kit than will be needed to complete conversion. When installation is complete, discard extra parts.

**Table 1 – Kit Contents**

| QTY. | PART NUMBER | DESCRIPTION |
|---|---|---|
| 2 | EF39ZW037 | VALVE CVRSN KIT - W/R SPRING 92-0659 |
| 1 | 323267-701 | BAG ASSEMBLY Includes: |
| 7 | LH32DB207 | ORIFICE - #42 |
| 1 | 323267-702 | BAG ASSEMBLY Includes: |
| 7 | LH32DB202 | ORIFICE - #43 |
| 1 | 323267-703 | BAG ASSEMBLY Includes: |
| 7 | LH32DB200 | ORIFICE - #44 |
| 1 | 323267-704 | BAG ASSEMBLY Includes: |
| 7 | LH32DB205 | ORIFICE - #45 |
| 1 | 340071-701 | LABEL SHEET Includes: |
| 1 | 340071-201 | CONVERSION RATING PLATE |
| 1 | 340071-202 | GAS CONTROL CONVERSION LABEL |
| 1 | 340071-203 | GAS CONTROL ADJUSTMENT LABEL |
| 1 | 340071-204 | CONVERSION RATING PLATE |
| 1 | 340071-205 | CONVERSION RESPONSIBILITY LABEL |
| 1 | 340071-702 | LABEL SHEET Includes: |
| 1 | 340071-206 | CONVERSION RATING PLATE |
| 1 | 340071-209 | CONVERSION RATING PLATE |

**Kit Contents (Continued)**

| | | |
|---|---|---|
| 1 | 340071-703 | LABEL SHEET Includes: |
| 1 | 340071-211 | CONVERSION RATING PLATE |
| 1 | 340071-214 | CONVERSION RATING PLATE |
| 1 | AG-KGBPN-VSP-XX | INSTALLATION INSTRUCTIONS |

**SECTION 1**

**Table 2 – Condensing Furnaces**

| MODEL NUMBERS BEGINNING WITH: | |
|---|---|
| 59MN7 | 987M |

## INSTALLATION

1. Set room thermostat to lowest setting or “OFF”.
2. Remove outer doors.
3. Disconnect power at external disconnect, fuse or circuit breaker.
4. Turn off gas at external shut-off or gas meter.
5. Remove outer doors and set aside.
6. Turn electric switch on gas valve to OFF.

## MANIFOLD/ORIFICE/BURNER REMOVAL

## ⚠ CAUTION

**UNIT OPERATION HAZARD**

Failure to follow this caution may result in unit damage or improper operation.

Label all wires prior to disconnection when servicing controls.

## ⚠ PRUDENCE

**D’EQUIPEMENT D’OPERATION**

Toute erreur de câblage peut être une source de danger et de panne.

Lors des opérations d’entretien des commandes, étiqueter tous les fils avant de les déconnecter.

**NOTE**: Use a back-up wrench on the gas valve to prevent the valve from rotating on the manifold or damaging the mounting to the burner box.

1. Disconnect the gas pipe from gas valve and remove pipe from the furnace casing. See Fig. 1.
2. Disconnect the connector harness from gas valve. Disconnect wires from Hot Surface Igniter (HSI) and Flame Sensor. Disconnect the two wires from the low gas pressure switch (LGPS) located on the gas valve.
3. Support the manifold and remove the 4 screws that secure the manifold assembly to the burner box and set aside.
4. Note the location of the green/yellow wire ground wire for re-assembly later. See Fig. 2.
5. Slide one-piece burner assembly out of slots on sides of burner box.
6. Remove the flame sensor from the burner assembly. See Fig. 3.
7. Remove the orifices from the manifold and discard.

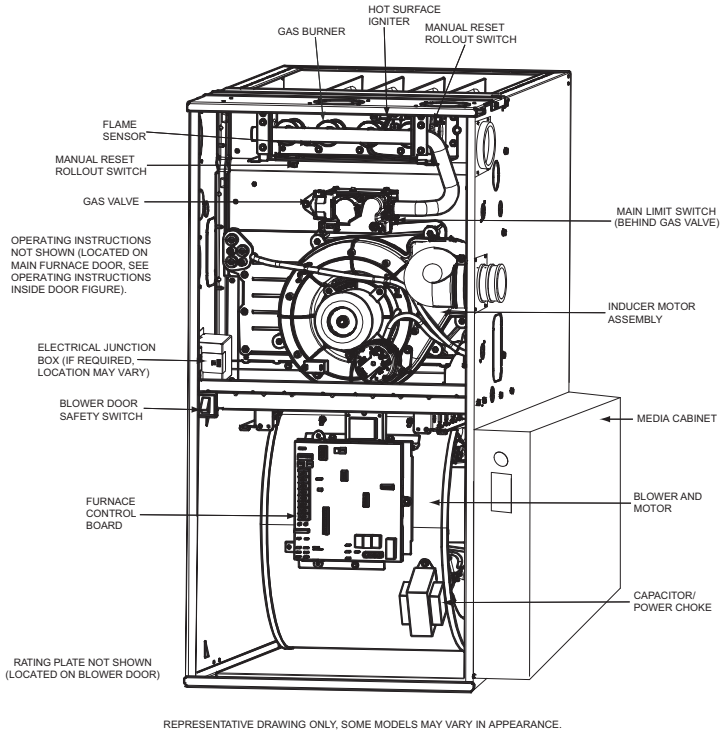


**Fig. 1 - Component Location**

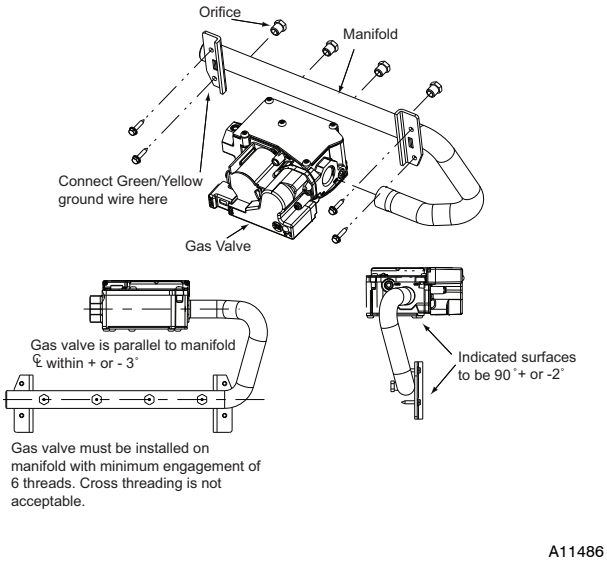


**Fig. 2 - Modulating Gas Valve with Orifices**

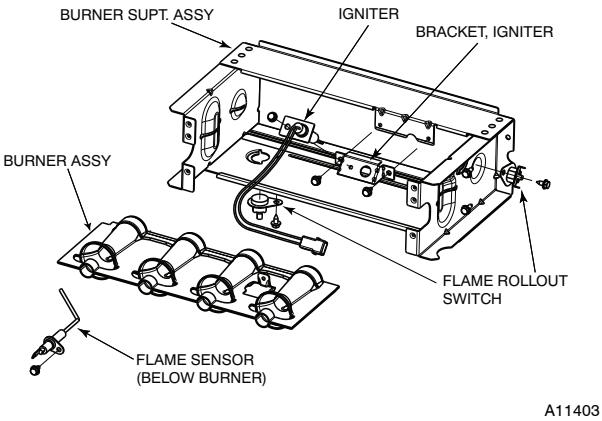


**Fig. 3 - Burner Assembly**

## ORIFICE SELECTION/DERATE

**⚠ CAUTION**

**UNIT DAMAGE HAZARD**

Failure to follow this caution may result in unit damage.

DO NOT re-drill burner orifices. Improper drilling may result in burrs, out-of-round holes, etc. Obtain new orifices if orifice size must be changed. (See Fig. 4.)

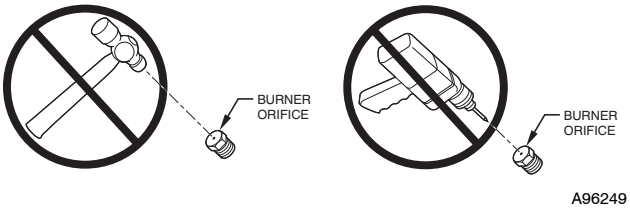


**Fig. 4 - Burner Orifice**

Determine natural gas orifice size and manifold pressures for correct input at installed altitude by using Table 3 (for 20,000 Btuh/Max-Heat/8000 Btuh Min-Heat per Burner) or Table 4 (For 20,200 Btuh Max Heat/8,000 Btuh Min-Heat per Burner).

1. Obtain yearly heat-value average (at installed altitude) for local gas supply.
2. Obtain yearly specific-gravity average for local gas supply.
3. Find installation altitude in Table 3 or Table 4, depending on furnace gas input rate.

**NOTE**: For Canada altitudes of 2000 to 4500 ft. (610 to 1372 M), use U.S.A. Altitudes of 2001 to 3000 ft. (610 to 914 M) in Table 3 or Table 4, depending on furnace gas input rate.

4. Find closest natural gas heat value and specific gravity in Table 3 or Table 4, depending on furnace gas input rate.
5. Follow heat-value line and specific-gravity line to point of intersection to find orifice size and maximum and minimum manifold pressure settings.

**Table 3 – Orifice Size and Manifold Pressure (In.W.C.) for Gas Input Rate**
**To be used with Modulating Furnaces EXCEPT 59MN7A060V21-20 and 987MA60060V21**

**MODULATING FURNACE**
**(TABULATED DATA BASED ON 20,000 BTUH MAX-HEAT / 8,000 BTUH MIN-HEAT PER BURNER, DERATED 2%/1000 FT (305M) ABOVE SEA LEVEL)**

| ALTITUDE RANGE ft (m) | | AVG. GAS HEAT VALUE AT ALTITUDE (Btu/cu ft) | SPECIFIC GRAVITY OF NATURAL GAS | | | | | | | |
|---|---|---|---|---|---|---|---|---|---|---|
| | | | 0.58 | | 0.60 | | 0.62 | | 0.64 | |
| | | | Orifice No. | Mnfld Press Max/Min | Orifice No. | Mnfld Press Max/Min | Orifice No. | Mnfld Press Max/Min | Orifice No. | Mnfld Press Max/Min |
| U.S.A. and Canada | 0 (0) to 2000 (610) | 900 | 43 | 3.8 /0.60 | 42 | 3.2 /0.50 | 42 | 3.3 /0.55 | 42 | 3.4 /0.55 |
| | | 925 | 43 | 3.6 /0.55 | 43 | 3.7 /0.60 | 43 | 3.8 /0.60 | 42 | 3.2 /0.50 |
| | | 950 | 43 | 3.4 /0.55 | 43 | 3.5 /0.55 | 43 | 3.6 /0.60 | 43 | 3.7 /0.60 |
| | | 975 | **44** | **3.7 /0.60** | **44** | **3.8 /0.60** | 43 | 3.4 /0.55 | 43 | 3.6 /0.55 |
| | | 1000 | **44** | **3.5 /0.55** | **44** | **3.6 /0.60** | **44** | **3.8 /0.60** | 43 | 3.4 /0.55 |
| | | 1025 | **44** | **3.3 /0.55** | **44** | **3.5 /0.55** | **44** | **3.6 /0.55** | **44** | **3.7 /0.60** |
| | | 1050 | **44** | **3.2 /0.50** | **44** | **3.3 /0.55** | **44** | **3.4 /0.55** | **44** | **3.5 /0.55** |
| | | 1075 | 45 | 3.7 /0.60 | 45 | 3.8 /0.60 | **44** | **3.3 /0.50** | **44** | **3.4 /0.55** |
| | | 1100 | 46 | 3.7 /0.60 | 46 | 3.8 /0.60 | 45 | 3.8 /0.60 | **44** | **3.2 /0.50** |
| U.S.A. and Canada | U.S.A. 2001 (611) to 3000 (914) Canada 2001 (611) to 4500 (1372) | 800 | 42 | 3.4 /0.55 | 42 | 3.5 /0.55 | 42 | 3.6 /0.55 | 42 | 3.7 /0.60 |
| | | 825 | 43 | 3.8 /0.60 | 42 | 3.3 /0.50 | 42 | 3.4 /0.55 | 42 | 3.5 /0.55 |
| | | 850 | 43 | 3.6 /0.60 | 43 | 3.7 /0.60 | 42 | 3.2 /0.50 | 42 | 3.3 /0.55 |
| | | 875 | 43 | 3.4 /0.55 | 43 | 3.5 /0.55 | 43 | 3.7 /0.60 | 43 | 3.8 /0.60 |
| | | 900 | **44** | **3.7 /0.60** | **44** | **3.8 /0.60** | 43 | 3.5 /0.55 | 43 | 3.6 /0.55 |
| | | 925 | **44** | **3.5 /0.55** | **44** | **3.6 /0.60** | **44** | **3.8 /0.60** | 43 | 3.4 /0.55 |
| | | 950 | **44** | **3.3 /0.55** | **44** | **3.4 /0.55** | **44** | **3.6 /0.55** | **44** | **3.7 /0.60** |
| | | 975 | **44** | **3.2 /0.50** | **44** | **3.3 /0.50** | **44** | **3.4 /0.55** | **44** | **3.5 /0.55** |
| | | 1000 | 46 | 3.8 /0.60 | 45 | 3.8 /0.60 | **44** | **3.2 /0.50** | **44** | **3.3 /0.55** |
| U.S.A. Only | 3001 (915) to 4000 (1219) | 775 | 42 | 3.3 /0.55 | 42 | 3.4 /0.55 | 42 | 3.5 /0.55 | 42 | 3.6 /0.60 |
| | | 800 | 43 | 3.8 /0.60 | 42 | 3.2 /0.50 | 42 | 3.3 /0.55 | 42 | 3.4 /0.55 |
| | | 825 | 43 | 3.6 /0.55 | 43 | 3.7 /0.60 | 43 | 3.8 /0.60 | 42 | 3.2 /0.50 |
| | | 850 | **44** | **3.8 /0.60** | 43 | 3.5 /0.55 | 43 | 3.6 /0.55 | 43 | 3.7 /0.60 |
| | | 875 | **44** | **3.6 /0.60** | **44** | **3.7 /0.60** | 43 | 3.4 /0.55 | 43 | 3.5 /0.55 |
| | | 900 | **44** | **3.4 /0.55** | **44** | **3.5 /0.55** | **44** | **3.7 /0.60** | **44** | **3.8 /0.60** |
| | | 925 | **44** | **3.2 /0.50** | **44** | **3.4 /0.55** | **44** | **3.5 /0.55** | **44** | **3.6 /0.55** |
| | | 950 | 45 | 3.7 /0.60 | **44** | **3.2 /0.50** | **44** | **3.3 /0.55** | **44** | **3.4 /0.55** |
| U.S.A. Only | 4001 (1220) to 5000 (1524) | 750 | 42 | 3.3 /0.50 | 42 | 3.4 /0.55 | 42 | 3.5 /0.55 | 42 | 3.6 /0.55 |
| | | 775 | 43 | 3.7 /0.60 | 43 | 3.8 /0.60 | 42 | 3.3 /0.50 | 42 | 3.4 /0.55 |
| | | 800 | 43 | 3.5 /0.55 | 43 | 3.6 /0.60 | 43 | 3.7 /0.60 | 43 | 3.8 /0.60 |
| | | 825 | **44** | **3.8 /0.60** | 43 | 3.4 /0.55 | 43 | 3.5 /0.55 | 43 | 3.6 /0.60 |
| | | 850 | **44** | **3.5 /0.55** | **44** | **3.7 /0.60** | **44** | **3.8 /0.60** | 43 | 3.4 /0.55 |
| | | 875 | **44** | **3.3 /0.55** | **44** | **3.5 /0.55** | **44** | **3.6 /0.55** | **44** | **3.7 /0.60** |
| | | 900 | **44** | **3.2 /0.50** | **44** | **3.3 /0.50** | **44** | **3.4 /0.55** | **44** | **3.5 /0.55** |
| | | 925 | 46 | 3.8 /0.60 | 45 | 3.7 /0.60 | **44** | **3.2 /0.50** | **44** | **3.3 /0.55** |
| U.S.A. Only | 5001 (1525) to 6000 (1829) | 725 | 42 | 3.2 /0.50 | 42 | 3.3 /0.55 | 42 | 3.4 /0.55 | 42 | 3.5 /0.55 |
| | | 750 | 43 | 3.7 /0.60 | 43 | 3.8 /0.60 | 42 | 3.2 /0.50 | 42 | 3.3 /0.55 |
| | | 775 | 43 | 3.4 /0.55 | 43 | 3.5 /0.55 | 43 | 3.7 /0.60 | 43 | 3.8 /0.60 |
| | | 800 | **44** | **3.7 /0.60** | **44** | **3.8 /0.60** | 43 | 3.4 /0.55 | 43 | 3.5 /0.55 |
| | | 825 | **44** | **3.5 /0.55** | **44** | **3.6 /0.55** | **44** | **3.7 /0.60** | **44** | **3.8 /0.60** |
| | | 850 | **44** | **3.3 /0.50** | **44** | **3.4 /0.55** | **44** | **3.5 /0.55** | **44** | **3.6 /0.60** |
| | | 875 | 45 | 3.7 /0.60 | **44** | **3.2 /0.50** | **44** | **3.3 /0.55** | **44** | **3.4 /0.55** |
| | | 900 | 46 | 3.7 /0.60 | 46 | 3.8 /0.60 | 45 | 3.8 /0.60 | **44** | **3.2 /0.50** |
| U.S.A. Only | 6001 (1830) to 7000 (2133) | 675 | 42 | 3.4 /0.55 | 42 | 3.5 /0.55 | 42 | 3.6 /0.60 | 42 | 3.8 /0.60 |
| | | 700 | 42 | 3.2 /0.50 | 42 | 3.3 /0.50 | 42 | 3.4 /0.55 | 42 | 3.5 /0.55 |
| | | 725 | 43 | 3.6 /0.60 | 43 | 3.7 /0.60 | 43 | 3.8 /0.60 | 42 | 3.3 /0.50 |
| | | 750 | 43 | 3.4 /0.55 | 43 | 3.5 /0.55 | 43 | 3.6 /0.55 | 43 | 3.7 /0.60 |
| | | 775 | **44** | **3.6 /0.60** | **44** | **3.7 /0.60** | 43 | 3.4 /0.55 | 43 | 3.5 /0.55 |
| | | 800 | **44** | **3.4 /0.55** | **44** | **3.5 /0.55** | **44** | **3.6 /0.60** | **44** | **3.7 /0.60** |
| | | 825 | **44** | **3.2 /0.50** | **44** | **3.3 /0.55** | **44** | **3.4 /0.55** | **44** | **3.5 /0.55** |
| | | 850 | 46 | 3.8 /0.60 | 45 | 3.8 /0.60 | **44** | **3.2 /0.50** | **44** | **3.3 /0.55** |

A11251A

**Table 3 - Orifice Size and Manifold Pressure (In.W.C.) for Gas Input Rate (Continued)**
**To be used with Modulating Furnaces EXCEPT 59MN7A060V21-20 and 987MA60060V21**

**MODULATING FURNACE**
**(TABULATED DATA BASED ON 20,000 BTUH MAX-HEAT / 8,000 BTUH MIN-HEAT PER BURNER, DERATED 2%/1000 FT (305M) ABOVE SEA LEVEL)**

| ALTITUDE RANGE ft (m) | | AVG. GAS HEAT VALUE AT ALTITUDE (Btu/cu ft) | SPECIFIC GRAVITY OF NATURAL GAS | | | | | | | |
|---|---|---|---|---|---|---|---|---|---|---|
| | | | 0.58 | | 0.60 | | 0.62 | | 0.64 | |
| | | | Orifice No. | Mnfld Press Max/Min | Orifice No. | Mnfld Press Max/Min | Orifice No. | Mnfld Press Max/Min | Orifice No. | Mnfld Press Max/Min |
| U.S.A. Only | | **650** | 42 | 3.4 /0.55 | 42 | 3.5 /0.55 | 42 | 3.6 /0.60 | 42 | 3.7 /0.60 |
| | **7001** | **675** | 43 | 3.8 /0.60 | 42 | 3.2 /0.50 | 42 | 3.3 /0.55 | 42 | 3.4 /0.55 |
| | **(2134)** | **700** | 43 | 3.5 /0.55 | 43 | 3.7 /0.60 | 43 | 3.8 /0.60 | 42 | 3.2 /0.50 |
| | **to** | **725** | **44** | **3.8 /0.60** | 43 | 3.4 /0.55 | 43 | 3.5 /0.55 | 43 | 3.6 /0.60 |
| | | **750** | **44** | **3.5 /0.55** | **44** | **3.7 /0.60** | **44** | **3.8 /0.60** | 43 | 3.4 /0.55 |
| | **8000** | **775** | **44** | **3.3 /0.55** | **44** | **3.4 /0.55** | **44** | **3.5 /0.55** | **44** | **3.7 /0.60** |
| | **(2438)** | **800** | 45 | 3.8 /0.60 | **44** | **3.2 /0.50** | **44** | **3.3 /0.55** | **44** | **3.4 /0.55** |
| | | **825** | 46 | 3.7 /0.60 | 46 | 3.8 /0.60 | 45 | 3.8 /0.60 | **44** | **3.2 /0.50** |
| U.S.A. Only | | **625** | 42 | 3.4 /0.55 | 42 | 3.5 /0.55 | 42 | 3.6 /0.55 | 42 | 3.7 /0.60 |
| | **8001** | **650** | 43 | 3.8 /0.60 | 42 | 3.2 /0.50 | 42 | 3.3 /0.55 | 42 | 3.4 /0.55 |
| | **(2439)** | **675** | 43 | 3.5 /0.55 | 43 | 3.6 /0.60 | 43 | 3.7 /0.60 | 42 | 3.2 /0.50 |
| | **to** | **700** | **44** | **3.7 /0.60** | 43 | 3.4 /0.55 | 43 | 3.5 /0.55 | 43 | 3.6 /0.55 |
| | | **725** | **44** | **3.5 /0.55** | **44** | **3.6 /0.60** | **44** | **3.7 /0.60** | **44** | **3.8 /0.60** |
| | **9000** | **750** | **44** | **3.3 /0.50** | **44** | **3.4 /0.55** | **44** | **3.5 /0.55** | **44** | **3.6 /0.55** |
| | **(2743)** | **775** | 45 | 3.7 /0.60 | **44** | **3.2 /0.50** | **44** | **3.3 /0.50** | **44** | **3.4 /0.55** |
| U.S.A. Only | **9001** | **600** | 42 | 3.3 /0.55 | 42 | 3.4 /0.55 | 42 | 3.6 /0.55 | 42 | 3.7 /0.60 |
| | **(2744)** | **625** | 43 | 3.7 /0.60 | 42 | 3.2 /0.50 | 42 | 3.3 /0.55 | 42 | 3.4 /0.55 |
| | **to** | **650** | 43 | 3.5 /0.55 | 43 | 3.6 /0.55 | 43 | 3.7 /0.60 | 43 | 3.8 /0.60 |
| | | **675** | **44** | **3.7 /0.60** | **44** | **3.8 /0.60** | 43 | 3.4 /0.55 | 43 | 3.5 /0.55 |
| | **10000** | **700** | **44** | **3.4 /0.55** | **44** | **3.5 /0.55** | **44** | **3.7 /0.60** | **44** | **3.8 /0.60** |
| | **(3048)** | **725** | **44** | **3.2 /0.50** | **44** | **3.3 /0.55** | **44** | **3.4 /0.55** | **44** | **3.5 /0.55** |

* Orifice numbers shown in **BOLD** are factory-installed.

A11251B

**Table 4 – Orifice Size and Manifold Pressure (In. W.C.) for Gas Input Rate**
**To Be Used with Modulating Furnaces 59MN7A060V21-20 and 987MA60060V21 ONLY**

**(TABULATED DATA BASED ON 20,200 BTUH MAX-HEAT / 8,000 BTUH MIN-HEAT PER BURNER, DERATED 2%/1000 FT (305M) ABOVE SEA LEVEL)**

| ALTITUDE RANGE | | AVG. GAS HEAT VALUE AT ALTITUDE | SPECIFIC GRAVITY OF NATURAL GAS | | | | | | | |
|---|---|---|---|---|---|---|---|---|---|---|
| | | | 0.58 | | 0.60 | | 0.62 | | 0.64 | |
| | ft (m) | (Btu/cu ft) | Orifice No. | Mnfld Press Max/Min | Orifice No. | Mnfld Press Max/Min | Orifice No. | Mnfld Press Max/Min | Orifice No. | Mnfld Press Max/Min |
| U.S.A. and Canada | 0 (0) to 2000 (610) | 900 | 42 | 3.2 /0.50 | 42 | 3.3 /0.50 | 42 | 3.4 /0.55 | 42 | 3.5 /0.55 |
| | | 925 | 43 | 3.7 /0.55 | 43 | 3.8 /0.60 | 42 | 3.2 /0.50 | 42 | 3.3 /0.50 |
| | | 950 | 43 | 3.5 /0.55 | 43 | 3.6 /0.55 | 43 | 3.7 /0.60 | 43 | 3.8 /0.60 |
| | | 975 | **44** | **3.8 /0.60** | 43 | 3.4 /0.55 | 43 | 3.5 /0.55 | 43 | 3.6 /0.55 |
| | | 1000 | **44** | **3.6 /0.55** | **44** | **3.7 /0.60** | **44** | **3.8 /0.60** | 43 | 3.5 /0.55 |
| | | 1025 | **44** | **3.4 /0.55** | **44** | **3.5 /0.55** | **44** | **3.6 /0.55** | **44** | **3.8 /0.60** |
| | | 1050 | **44** | **3.3 /0.50** | **44** | **3.4 /0.55** | **44** | **3.5 /0.55** | **44** | **3.6 /0.55** |
| | | 1075 | 45 | 3.8 /0.60 | **44** | **3.2 /0.50** | **44** | **3.3 /0.50** | **44** | **3.4 /0.55** |
| | | 1100 | 46 | 3.8 /0.60 | 45 | 3.7 /0.60 | **44** | **3.2 /0.50** | **44** | **3.3 /0.50** |
| U.S.A. and Canada | U.S.A. 2001 (611) to 3000 (914) | 800 | 42 | 3.4 /0.55 | 42 | 3.5 /0.55 | 42 | 3.7 /0.55 | 42 | 3.8 /0.60 |
| | | 825 | 42 | 3.2 /0.50 | 42 | 3.3 /0.50 | 42 | 3.4 /0.55 | 42 | 3.6 /0.55 |
| | | 850 | 43 | 3.7 /0.60 | 43 | 3.8 /0.60 | 42 | 3.2 /0.50 | 42 | 3.3 /0.55 |
| | | 875 | 43 | 3.5 /0.55 | 43 | 3.6 /0.55 | 43 | 3.7 /0.60 | 43 | 3.8 /0.60 |
| | | 900 | **44** | **3.8 /0.60** | 43 | 3.4 /0.55 | 43 | 3.5 /0.55 | 43 | 3.6 /0.55 |
| | Canada 2001 (611) to 4500 (1372) | 925 | **44** | **3.6 /0.55** | **44** | **3.7 /0.60** | **44** | **3.8 /0.60** | 43 | 3.4 /0.55 |
| | | 950 | **44** | **3.4 /0.55** | **44** | **3.5 /0.55** | **44** | **3.6 /0.55** | **44** | **3.7 /0.60** |
| | | 975 | **44** | **3.2 /0.50** | **44** | **3.3 /0.50** | **44** | **3.4 /0.55** | **44** | **3.6 /0.55** |
| | | 1000 | 45 | 3.7 /0.60 | **44** | **3.2 /0.50** | **44** | **3.3 /0.50** | **44** | **3.4 /0.55** |
| U.S.A. Only | 3001 (915) to 4000 (1219) | 775 | 42 | 3.4 /0.55 | 42 | 3.5 /0.55 | 42 | 3.6 /0.55 | 42 | 3.7 /0.60 |
| | | 800 | 42 | 3.2 /0.50 | 42 | 3.3 /0.50 | 42 | 3.4 /0.55 | 42 | 3.5 /0.55 |
| | | 825 | 43 | 3.6 /0.55 | 43 | 3.7 /0.60 | 42 | 3.2 /0.50 | 42 | 3.3 /0.50 |
| | | 850 | 43 | 3.4 /0.55 | 43 | 3.5 /0.55 | 43 | 3.6 /0.55 | 43 | 3.8 /0.60 |
| | | 875 | **44** | **3.7 /0.60** | **44** | **3.8 /0.60** | 43 | 3.4 /0.55 | 43 | 3.6 /0.55 |
| | | 900 | **44** | **3.5 /0.55** | **44** | **3.6 /0.55** | **44** | **3.7 /0.60** | 43 | 3.4 /0.55 |
| | | 925 | **44** | **3.3 /0.50** | **44** | **3.4 /0.55** | **44** | **3.5 /0.55** | **44** | **3.6 /0.55** |
| | | 950 | 45 | 3.8 /0.60 | **44** | **3.2 /0.50** | **44** | **3.4 /0.55** | **44** | **3.5 /0.55** |
| U.S.A. Only | 4001 (1220) to 5000 (1524) | 750 | 42 | 3.3 /0.50 | 42 | 3.4 /0.55 | 42 | 3.6 /0.55 | 42 | 3.7 /0.55 |
| | | 775 | 43 | 3.8 /0.60 | 42 | 3.2 /0.50 | 42 | 3.3 /0.50 | 42 | 3.4 /0.55 |
| | | 800 | 43 | 3.6 /0.55 | 43 | 3.7 /0.60 | 43 | 3.8 /0.60 | 42 | 3.2 /0.50 |
| | | 825 | **44** | **3.8 /0.60** | 43 | 3.5 /0.55 | 43 | 3.6 /0.55 | 43 | 3.7 /0.60 |
| | | 850 | **44** | **3.6 /0.55** | **44** | **3.7 /0.60** | 43 | 3.4 /0.55 | 43 | 3.5 /0.55 |
| | | 875 | **44** | **3.4 /0.55** | **44** | **3.5 /0.55** | **44** | **3.6 /0.55** | **44** | **3.8 /0.60** |
| | | 900 | **44** | **3.2 /0.50** | **44** | **3.3 /0.50** | **44** | **3.4 /0.55** | **44** | **3.6 /0.55** |
| | | 925 | 45 | 3.7 /0.60 | **44** | **3.2 /0.50** | **44** | **3.3 /0.50** | **44** | **3.4 /0.55** |
| U.S.A. Only | 5001 (1525) to 6000 (1829) | 725 | 42 | 3.3 /0.50 | 42 | 3.4 /0.55 | 42 | 3.5 /0.55 | 42 | 3.6 /0.55 |
| | | 750 | 43 | 3.7 /0.60 | 42 | 3.2 /0.50 | 42 | 3.3 /0.50 | 42 | 3.4 /0.55 |
| | | 775 | 43 | 3.5 /0.55 | 43 | 3.6 /0.55 | 43 | 3.7 /0.60 | 42 | 3.2 /0.50 |
| | | 800 | **44** | **3.8 /0.60** | 43 | 3.4 /0.55 | 43 | 3.5 /0.55 | 43 | 3.6 /0.55 |
| | | 825 | **44** | **3.5 /0.55** | **44** | **3.7 /0.55** | **44** | **3.8 /0.60** | 43 | 3.4 /0.55 |
| | | 850 | **44** | **3.3 /0.50** | **44** | **3.4 /0.55** | **44** | **3.6 /0.55** | **44** | **3.7 /0.60** |
| | | 875 | 45 | 3.8 /0.60 | **44** | **3.3 /0.50** | **44** | **3.4 /0.55** | **44** | **3.5 /0.55** |
| | | 900 | 46 | 3.8 /0.60 | 45 | 3.7 /0.60 | **44** | **3.2 /0.50** | **44** | **3.3 /0.50** |
| U.S.A. Only | 6001 (1830) to 7000 (2133) | 675 | 42 | 3.5 /0.55 | 42 | 3.6 /0.55 | 42 | 3.7 /0.60 | 42 | 3.8 /0.60 |
| | | 700 | 42 | 3.2 /0.50 | 42 | 3.3 /0.50 | 42 | 3.5 /0.55 | 42 | 3.6 /0.55 |
| | | 725 | 43 | 3.7 /0.60 | 43 | 3.8 /0.60 | 42 | 3.2 /0.50 | 42 | 3.3 /0.50 |
| | | 750 | 43 | 3.4 /0.55 | 43 | 3.5 /0.55 | 43 | 3.7 /0.55 | 43 | 3.8 /0.60 |
| | | 775 | **44** | **3.7 /0.60** | **44** | **3.8 /0.60** | 43 | 3.4 /0.55 | 43 | 3.5 /0.55 |
| | | 800 | **44** | **3.5 /0.55** | **44** | **3.6 /0.55** | **44** | **3.7 /0.60** | **44** | **3.8 /0.60** |
| | | 825 | **44** | **3.2 /0.50** | **44** | **3.4 /0.55** | **44** | **3.5 /0.55** | **44** | **3.6 /0.55** |
| | | 850 | 45 | 3.7 /0.60 | **44** | **3.2 /0.50** | **44** | **3.3 /0.50** | **44** | **3.4 /0.55** |

A11621A

**Table 4 - Orifice Size and Manifold Pressure (In. W.C.) for Gas Input Rate (Continued)**
**To Be Used with Modulating Furnaces 59MN7A060V21-20 and 987MA60060V21 ONLY**

**(TABULATED DATA BASED ON 20,200 BTUH MAX-HEAT / 8,000 BTUH MIN-HEAT PER BURNER, DERATED 2%/1000 FT (305M) ABOVE SEA LEVEL)**

| ALTITUDE RANGE ft (m) | | AVG. GAS HEAT VALUE AT ALTITUDE (Btu/cu ft) | SPECIFIC GRAVITY OF NATURAL GAS | | | | | | | |
|---|---|---|---|---|---|---|---|---|---|---|
| | | | 0.58 | | 0.60 | | 0.62 | | 0.64 | |
| | | | Orifice No. | Mnfld Press Max/Min | Orifice No. | Mnfld Press Max/Min | Orifice No. | Mnfld Press Max/Min | Orifice No. | Mnfld Press Max/Min |
| U.S.A. Only | | **650** | 42 | 3.4 /0.55 | 42 | 3.6 /0.55 | 42 | 3.7 /0.60 | 42 | 3.8 /0.60 |
| | **7001** | **675** | 42 | 3.2 /0.50 | 42 | 3.3 /0.50 | 42 | 3.4 /0.55 | 42 | 3.5 /0.55 |
| | **(2134)** | **700** | 43 | 3.6 /0.55 | 43 | 3.7 /0.60 | 42 | 3.2 /0.50 | 42 | 3.3 /0.50 |
| | **to** | **725** | 43 | 3.4 /0.55 | 43 | 3.5 /0.55 | 43 | 3.6 /0.55 | 43 | 3.7 /0.60 |
| | | **750** | **44** | **3.6 /0.55** | **44** | **3.7 /0.60** | 43 | 3.4 /0.55 | 43 | 3.5 /0.55 |
| | **8000** | **775** | **44** | **3.4 /0.55** | **44** | **3.5 /0.55** | **44** | **3.6 /0.55** | **44** | **3.7 /0.60** |
| | **(2438)** | **800** | **44** | **3.2 /0.50** | **44** | **3.3 /0.50** | **44** | **3.4 /0.55** | **44** | **3.5 /0.55** |
| | | **825** | 46 | 3.8 /0.60 | 45 | 3.7 /0.60 | **44** | **3.2 /0.50** | **44** | **3.3 /0.50** |
| U.S.A. Only | | **625** | 42 | 3.4 /0.55 | 42 | 3.5 /0.55 | 42 | 3.7 /0.55 | 42 | 3.8 /0.60 |
| | **8001** | **650** | 42 | 3.2 /0.50 | 42 | 3.3 /0.50 | 42 | 3.4 /0.55 | 42 | 3.5 /0.55 |
| | **(2439)** | **675** | 43 | 3.6 /0.55 | 43 | 3.7 /0.60 | 43 | 3.8 /0.60 | 42 | 3.2 /0.50 |
| | **to** | **700** | **44** | **3.8 /0.60** | 43 | 3.4 /0.55 | 43 | 3.6 /0.55 | 43 | 3.7 /0.55 |
| | | **725** | **44** | **3.6 /0.55** | **44** | **3.7 /0.60** | **44** | **3.8 /0.60** | 43 | 3.4 /0.55 |
| | **9000** | **750** | **44** | **3.3 /0.50** | **44** | **3.4 /0.55** | **44** | **3.5 /0.55** | **44** | **3.7 /0.55** |
| | **(2743)** | **775** | 45 | 3.8 /0.60 | **44** | **3.2 /0.50** | **44** | **3.3 /0.50** | **44** | **3.4 /0.55** |
| U.S.A. Only | **9001** | **600** | 42 | 3.4 /0.55 | 42 | 3.5 /0.55 | 42 | 3.6 /0.55 | 42 | 3.8 /0.60 |
| | **(2744)** | **625** | 43 | 3.8 /0.60 | 42 | 3.2 /0.50 | 42 | 3.3 /0.55 | 42 | 3.5 /0.55 |
| | **to** | **650** | 43 | 3.5 /0.55 | 43 | 3.6 /0.55 | 43 | 3.8 /0.60 | 42 | 3.2 /0.50 |
| | | **675** | **44** | **3.8 /0.60** | 43 | 3.4 /0.55 | 43 | 3.5 /0.55 | 43 | 3.6 /0.55 |
| | **10000** | **700** | **44** | **3.5 /0.55** | **44** | **3.6 /0.55** | **44** | **3.7 /0.60** | **44** | **3.8 /0.60** |
| | **(3048)** | **725** | **44** | **3.3 /0.50** | **44** | **3.4 /0.55** | **44** | **3.5 /0.55** | **44** | **3.6 /0.55** |

* Orifice numbers shown in **BOLD** are factory-installed.

Furnace gas input rate on furnace rating plate is for installations at altitudes up to 2000 ft. (610 M).

In the U.S.A.; the input rating for altitudes above 2000 ft.(610 M) must be reduced by 2 percent for each 1000 ft. (305 M) above sea level.

In Canada, the input rating must be derated by 5 percent for altitudes of 2000 ft. to 4500 ft. (610 to 1372 M) above sea level.

The Conversion Kit Rating Plate accounts for high altitude derate.

## INSTALL ORIFICES

Install main burner orifices. DO NOT use Teflon tape. Finger-tighten orifices at least one full turn to prevent cross-threading, then tighten with wrench. There are enough orifices in each kit for largest furnace. Discard extra orifices.

**NOTE**: DO NOT reinstall the manifold at this time.

## REMOVE MIXER SCREWS FROM BURNERS

**NOTE**: Each burner contains a mixer screw that must be removed. Refer to Fig. 5 for the mixer screw location.

1. Remove the mixer screws from the burners.

**NOTE**: It is not necessary to plug the hole in the burner when the mixer screws are removed.

A11621B

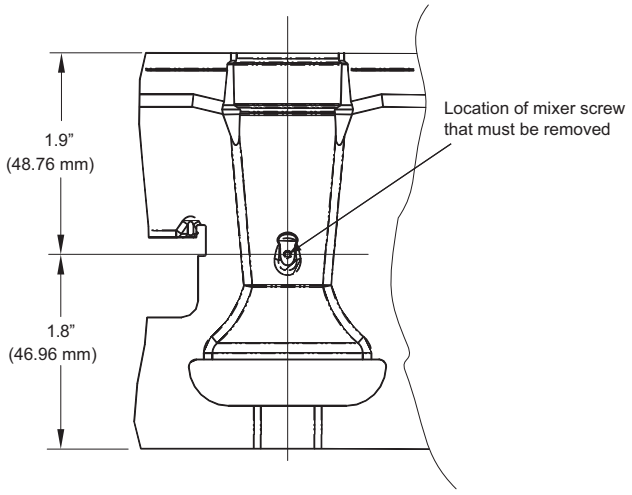


A11501

**Fig. 5 - Mixer Screw Location**

## REINSTALL BURNER ASSEMBLY

To reinstall burner assembly:

1. Attach flame sensor to burner assembly.
2. Insert one-piece burner in slot on sides of burner box and slide burner back in place.
3. Reattach HSI wires to HSI.
4. Verify igniter to burner alignment. See Fig. 6 and 7.

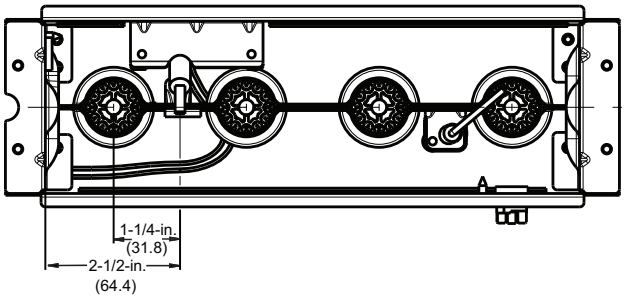


**Fig. 6 - Igniter Position - Back View**

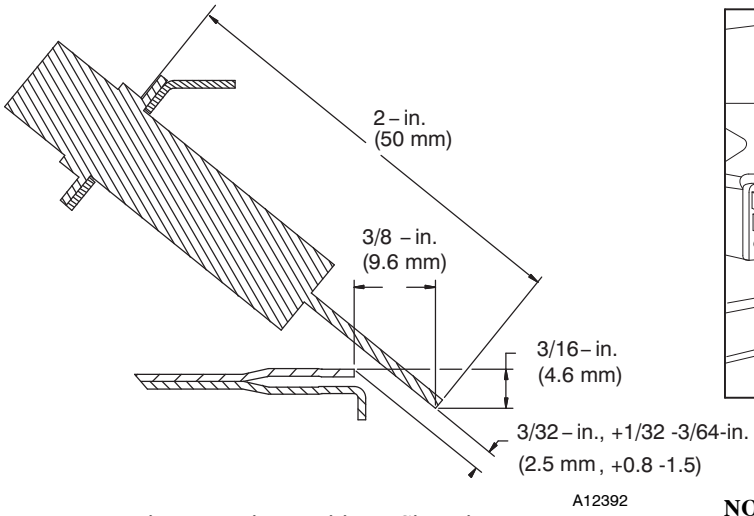


**Fig. 7 - Igniter Position - Side View**

## CONVERT GAS VALVE

**WARNING**

**FIRE, EXPLOSION, ELECTRICAL SHOCK HAZARD**

Failure to follow this warning could result in personal injury, death or property damage.

Gas supply MUST be shut off before disconnecting electrical power and proceeding with conversion.

**WARNING**

**ELECTRICAL SHOCK, FIRE OR EXPLOSION HAZARD**

Failure to follow this warning could result in personal injury, death or property damage.

Before installing, modifying, or servicing system, main electrical disconnect switch must be in the OFF position and install a lockout tag. There may be more than one disconnect switch. Lock out and tag switch with a suitable warning label. Verify proper operation after servicing.

Refer to Fig. 8 and 9.

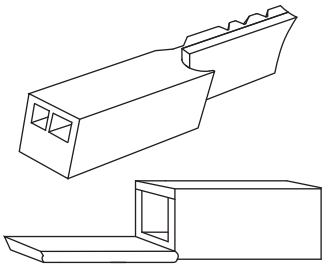


**Fig. 8 - Propane Jumper**

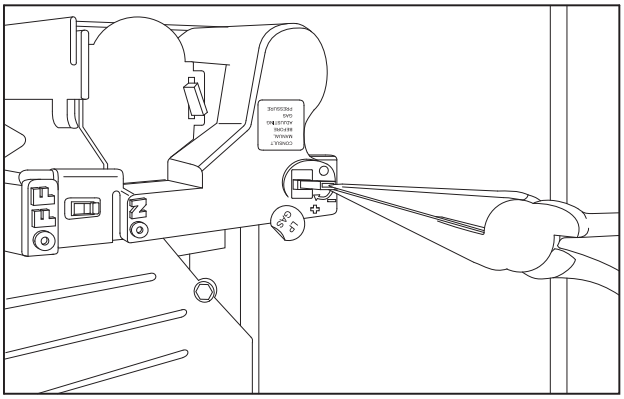


**Fig. 9 - Removing Propane Jumper**

**NOTE**: The Propane jumper for the modulating gas valve is very small. Needle-nose pliers are required to remove the jumper from the gas valve.

1. Locate the round **"LP GAS"** sticker on the top of the gas valve.
2. Peel the sticker off and discard.
3. Note the small square opening in the top of the gas valve.
4. Remove the small black plastic Propane jumper from the gas valve.
5. Cover the opening in the gas valve with a small piece of black electrical tape.

## REMOVE LOW GAS PRESSURE SWITCH

**NOTE**: There are 2 ways that the Low Gas Pressure Switch (LGPS) could have been installed during the original natural to Propane gas conversion.

**All 14 3/16-in. (360 mm) Casings or Vent Passes Between Inducer Assembly and Burner Assembly**

If the vent pipe passes between the inducer and burner assembly, or the furnace is a 14 3/16-in. (360 mm) wide casing, the switch may have been installed as follows. (See Fig 10.)

1. Remove low gas pressure switch, brass street 90° elbow, brass Hex nipple, brass tee and black iron street 90° elbow from the gas valve inlet pressure tap. (See Fig 10.)

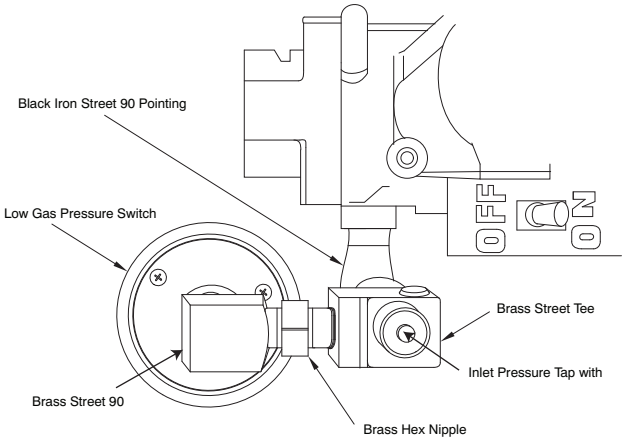


**Fig. 10 - LGPS for 14-3/16 (360 mm) Casing or When Vent Passes Between Inducer and Burner Assembly**

**NOTE**: Use pipe dope approved for use with Propane gas.

2. Apply pipe dope sparingly to the 1/8-in. NPT pipe plug (provided in kit) and install in the 1/8-in. tapped inlet-pressure tap opening in the gas valve. DO NOT over-tighten. Check for gas leaks after gas supply has been turned on.

## ⚠ WARNING

**FIRE AND EXPLOSION HAZARD**

Failure to follow this warning could result in personal injury and/or death.

NEVER test for gas leaks with an open flame. Use a commercially available soap solution made specifically for the detection of leaks to check all connections. A fire or explosion may result causing property damage, personal injury or loss of life.

## ⚠ AVERTISSEMENT

**RISQUE D'EXPLOSION ET D'INCENDIE**

Le fait de ne pas suivre cet avertissement pourrait entraîner des dommages corporels et / ou la mort.

Ne jamais examiner pour les fuites de gaz avec une flamme vive. Utilisez plutôt un savon fait specifiquement pour la détection des fuites de gaz pour verifier tous les connections. Un incendie ou une explosion peut entrainer des dommages matériels, des blessures ou la mort.

**Casings Wider Than 14 3/16-in. (360 mm) /Vent Does Not Pass Between Inducer and Burner Assembly**

If the vent pipe does not pass between the inducer and burner assembly, or the furnace is wider than a 14 3/16-in. (360 mm) wide casing, the switch may have been installed as follows. (See Fig 11.)

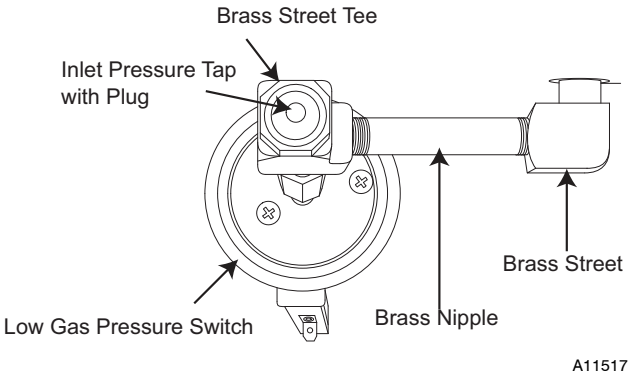


**Fig. 11 - LGPS for Casing Wider Than 14-3/16 (360 mm) and Vent Does Not Pass Between Inducer and Burner Assembly**

1. Remove low gas pressure switch, brass street 90° elbow, brass Hex nipple, brass Tee and brass nipple from the gas valve inlet pressure tap. (See Fig 11.)

**NOTE**: Use pipe dope approved for use with Propane gas.

2. Apply pipe dope sparingly to the 1/8-in. NPT pipe plug (provided in kit) and install in the 1/8-in. tapped inlet-pressure tap opening in the gas valve. DO NOT over-tighten. Check for gas leaks after gas supply has been turned on.

## INSTALL MANIFOLD

1. Align the orifices in the manifold assembly with the support rings on the end of the burner.
2. Insert the orifices in the support rings of the burners. Manifold mounting tabs should fit flush against the burner box

**NOTE**: If manifold does not fit flush against the burner box, the burners are not fully seated forward. Remove the manifold and check burner positioning in the burner box assembly.

3. Attach the green/yellow wire and ground terminal to one of the manifold mounting screws.
4. Install the remaining manifold mounting screws.
5. Connect the wires to the flame sensor and hot surface igniter.
6. Connect the connector harness to gas valve.
7. Rewire unit low pressure switch (LPS) as follows:
   a. Trace one of the orange wires previously disconnected from the LGPS back to the NO terminals of the LPS.
   b. Trace the other orange wire previously disconnected from the LGPS back to its splice connection with the yellow wire of the furnace wire harness. Disconnect and discard this orange wire and the splice connection.
   c. Connect the yellow wire of the furnace wire harness (see "b" above) to the NO terminal of the LPS.
   d. Refer to the furnace wiring diagram to ensure proper location of wires.

**NOTE**: Use only Propane-resistant pipe dope. DO NOT use Teflon tape.

8. Insert the gas pipe through the grommet in the casing. Apply a thin layer of pipe dope to the threads of the pipe and thread the pipe into the gas valve.

**NOTE**: Use a back-up wrench on the gas valve to prevent the valve from rotating on the manifold or damaging the mounting to the burner box.

9. With a back-up wrench on the inlet boss of the gas valve, finish tightening the gas pipe to the gas valve.
10. Turn gas on at electric switch on gas valve.

## CHECK INLET GAS PRESSURE

**⚠ CAUTION**

**UNIT DAMAGE HAZARD**

Failure to follow this caution may result in unit damage.

DO NOT operate furnace more than one minute to check inlet gas pressure, as conversion is not complete at this time.

**NOTE**: This kit is to be used only when inlet gas pressure is between 4.5-in. W.C. and 13.6-in. W.C.

1. Verify manometer is connected to inlet pressure tap on gas valve.
2. Turn on furnace power supply.
3. Turn gas supply manual shutoff valve to ON position.

**⚠ WARNING**

**FIRE, EXPLOSION, ELECTRICAL SHOCK HAZARD**

Failure to follow this warning could result in personal injury, death or property damage.

Gas supply MUST be shut off before disconnecting electrical power and proceeding with conversion.

**⚠ WARNING**

**ELECTRICAL SHOCK, FIRE OR EXPLOSION HAZARD**

Failure to follow this warning could result in personal injury, death or property damage.

Before installing, modifying, or servicing system, main electrical disconnect switch must be in the OFF position and install a lockout tag. There may be more than one disconnect switch. Lock out and tag switch with a suitable warning label. Verify proper operation after servicing.

4. Turn furnace gas valve switch to ON position.
5. Turn Setup Switch SW1-2 on furnace control ON (see Fig. 12).
6. Jumper R-W/W1 and R-W2 thermostat connections on control.

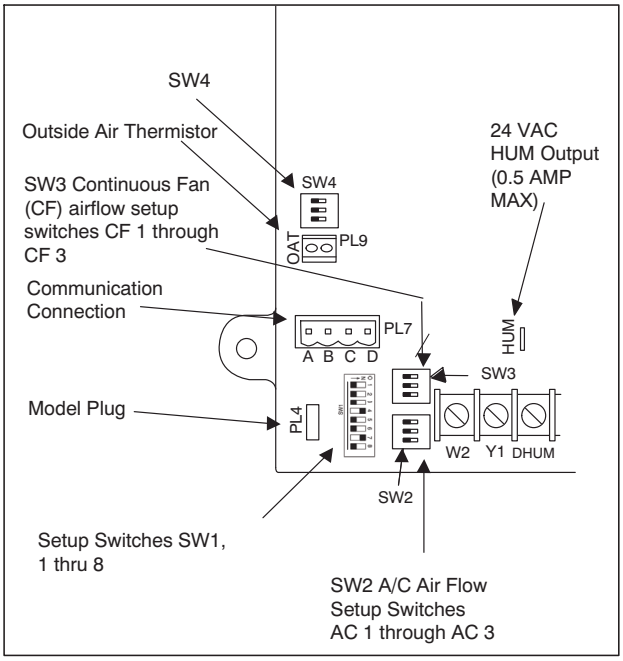


A11471

**Fig. 12 - Furnace Control**

7. When main burners ignite, confirm inlet gas pressure is between 4.5-in. W.C. and 13.6-in. W.C.
8. Remove jumper across R-W/W1 and R-W2 thermostat connections to terminate call for heat.
9. Turn furnace gas valve switch to OFF position.
10. Turn gas supply manual shutoff valve to OFF position.
11. Turn off furnace power supply.
12. Remove manometer.
13. Apply pipe dope sparingly to the 1/8-in. NPT pipe plug and install in the 1/8-in. tapped inlet-pressure tap opening in the gas valve. DO NOT over-tighten. Check for gas leaks after gas supply has been turned on.

## CHECK FURNACE AND MAKE ADJUSTMENTS

**⚠ WARNING**

**FIRE AND EXPLOSION HAZARD**

Failure to follow this warning could result in personal injury and/or death.

NEVER test for gas leaks with an open flame. Use a commercially available soap solution made specifically for the detection of leaks to check all connections. A fire or explosion may result causing property damage, personal injury or loss of life.

## ⚠ AVERTISSEMENT

**RISQUE D'EXPLOSION ET D'INCENDIE**

Le fait de ne pas suivre cet avertissement pourrait entraîner des dommages corporels et / ou la mort.

Ne jamais examiner pour les fuites de gaz avec une flamme vive. Utilisez plutôt un savon fait specifiquement pour la détection des fuites de gaz pour verifier tous les connections. Un incendie ou une explosion peut entrainer des dommages matériels, des blessures ou la mort.

1. Be sure main gas and electric supplies to furnace are off.
2. Remove 1/8-in. NPT pipe plug from manifold pressure tap on downstream side of gas valve.
3. Attach manometer to manifold pressure tap on gas valve. (see Fig. 13.)
4. Turn gas supply manual shutoff valve to ON position.
5. Turn furnace gas valve switch to ON position.
6. Check all threaded pipe connections for gas leaks.
7. Turn on furnace power supply.

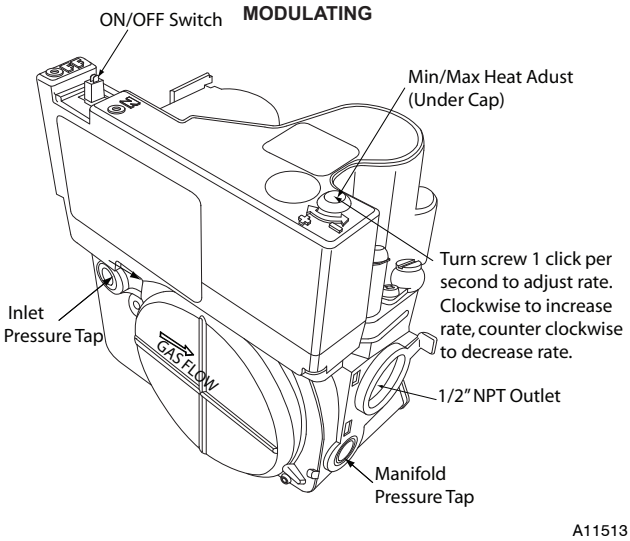


**Fig. 13 - Gas Valve**

## GAS INPUT RATE INFORMATION

See furnace rating plate on blower door for input rate. The input rate for natural gas is determined by manifold pressure and orifice size.

The gas valve must be set for Maximum Heat first and then set for Minimum Heat on Modulating furnaces.

Determine natural gas orifice size and manifold pressures for correct input at installed altitude by using Table 3 (for 20,000 Btuh/Max-Heat/8000 Btuh Min-Heat per Burner) or Table 4 (For 20,200 Btuh Max Heat/8,000 Btuh Min-Heat per Burner).

1. Obtain yearly heat-value average (at installed altitude) for local gas supply.
2. Obtain yearly specific-gravity average for local gas supply.
3. Find installation altitude in Table 3 or Table 4, depending on furnace gas input rate.

**NOTE**: For Canada altitudes of 2000 to 4500 ft. (610 to 1372 M), use U.S.A. Altitudes of 2001 to 3000 ft. (610 to 914 M) in Table 3 or Table 4, depending on furnace gas input rate.

4. Find closest natural gas heat value and specific gravity in Table 3 or Table 4, depending on furnace gas input rate.
5. Follow heat-value line and specific-gravity line to point of intersection to find orifice size and maximum and minimum manifold pressure settings.

Furnace gas input rate on rating plate is for installations at altitudes up to 2000 ft. (610 M).

In the U.S.A., the input rating for altitudes above 2000 ft. (610M) must be reduced by 2 percent for each 1000 ft. (305 M) above sea level.

In Canada, the input rating must be derated by 5 percent for altitudes of 2000 ft. (610 M) to 4500 ft. (1372 M) above sea level.

The Conversion Kit Rating Plate accounts for high altitude derate.

## SET GAS INPUT RATE

## ⚠ CAUTION

**UNIT DAMAGE HAZARD**

Failure to follow this caution may result in gas valve damage.

DO NOT force the rotary adjustment switch on the modulating gas valve. DO NOT turn the rotary adjustment switch faster than one click per second when adjusting manifold pressure. Gas valve will be damaged if excessive force is used on the rotary switch.

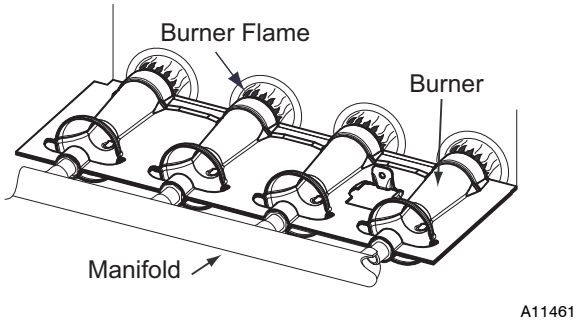


**Fig. 14 - Burner Flame**

For proper operation and long term reliability, the manifold pressure must be adjusted as specified on the conversion kit rating plate.

The modulating furnace manifold pressure is set at two points. The first point is Maximum Heat. The second point is Minimum Heat. DO NOT adjust Intermediate Heat manifold pressure. Intermediate Heat manifold pressure can be checked as part of the temperature rise, but is not adjustable. Always adjust Maximum Heat first, then Minimum Heat.

**NOTE**: Use care when performing adjustments. Gas valve adjustment is performed by turning a rotary adjustment switch inside the gas valve with a small straight blade screwdriver. Excessive force can break or bend the rotary adjustment switch making it non-adjustable.

To adjust manifold pressure to obtain input rate for Maximum Heat:

1. Make sure the gas supply is turned off to the furnace and at the electric switch on the gas valve.
2. Remove the 1/8 inch NPT plug from the outlet pressure tap on the gas valve.
3. Connect a manometer to the outlet pressure tap on gas valve.
4. Turn on furnace power supply.
5. Turn gas supply manual shutoff valve to ON position.

6. Turn furnace gas valve switch to ON position.
7. Turn Setup switch SW 1-2 to ON.
8. Verify Set-up switch SW 4-2 is turned OFF.
9. Jumper the R to W/W1 and W2 thermostat connections at the furnace control board.
10. After the main burners ignite and the blower starts, confirm Maximum Heat manifold pressure is correct, based on the manifold pressure table. (See Fig. 3.)
11. To adjust the Maximum Heat manifold pressure, slowly turn the rotary adjustment switch counterclockwise to decrease manifold pressure or clockwise to increase manifold pressure.
12. Turn rotary adjustment switch no more than one click per second until you obtain the required manifold pressure.

Main burner flame should be clear blue, almost transparent.

To adjust manifold pressure to obtain input rate for Minimum Heat:

1. Remove the jumper from W2 at the thermostat connections at the furnace control board control.
2. Wait until the burners and the blower transitions to Minimum Heat.
3. Verify the Minimum Heat manifold pressure is correct, based on the manifold pressure table on Conversion Kit Rating Plate.
4. To adjust the Minimum Heat manifold pressure, Slowly turn the rotary adjustment switch counterclockwise to decrease manifold pressure or clockwise to increase manifold pressure.
5. Turn rotary adjustment switch no more than one click per second until you obtain the required manifold pressure. This adjustment will not affect the previous Maximum Heat adjustment.

After adjusting the manifold pressure, allow the furnace to operate an additional 5 minutes before checking Minimum Heat Temperature rise.

Furnace must operate within ranges of temperature rise specified on the furnace rating plate. Determine air temperature rise as follows:

1. Place thermometers in return and supply ducts as near furnace as possible. Be sure thermometers DO NOT see heat exchanger so that radiant heat does not affect readings. This practice is particularly important with straight-run ducts.
2. When thermometer readings stabilize, subtract return-air temperature from supply-air temperature to determine air temperature rise.
3. Allow the furnace to run for at least 10 minutes before checking Temperature Rise.

If the temperature rise is too high or too low in Minimum Heat:

1. Remove jumpers from R and W/W1.
2. Wait until the blower off delay is completed.
3. Turn 115 VAC power off.
4. Check the position of Heat Rise Adjustment Switch SW1-3. When set to ON, airflow is raised 18% higher for Minimum Heat and Intermediate Heat. Factory default position is OFF.
5. Turn 115 VAC power on.
6. Jumper R to W/W1 and W2.
7. After burners ignite and blower starts allow the furnace to run for at least 10 minutes before checking Temperature Rise.

**Maximum Heat Temperature Rise**

If the temperature rise is too high or too low in Maximum Heat:

1. Remove jumpers from R, W1 and W2.
2. Wait until the blower off delay is completed.
3. Turn 115 VAC power off.
4. Check the position of the Efficiency/Comfort Adjustment switch SW1-4. When set to OFF (Efficiency Mode), airflow is 10% higher for Minimum, 7.5% for Intermediate Heat, and 17.5% for Maximum Heat. Factory default position is ON (Comfort Mode).
5. Turn 115 VAC power on.
6. Re-check Minimum Heat Temperature Rise.
7. Remove jumpers across thermostat connections to terminate the call for heat. Wait until the blower off delay is completed.
8. Turn gas supply manual shutoff valve to OFF position.
9. Turn off furnace power supply.
10. Remove manometer from the outlet pressure tap of the gas valve.
11. Apply pipe dope sparingly to 1/8-in. NPT plug and re-install outlet pressure tap on the gas valve.
12. Re-install plastic cap over rotary adjustment switch on the top of the gas valve.

## LABEL APPLICATION

1. Fill in Conversion Responsibility Label 340071-205 and apply to Blower Access Door of furnace as shown. (See Fig. 15.) Date, name, and address of organization making this conversion are required.
2. Attach Conversion Rating Plate Label 340071-201 to outer door of furnace, see Fig. 16.
3. Attach Gas Control Conversion Label 340071-202 to gas valve. DO NOT use 340071-203, which is similar.

| THIS FURNACE WAS CONVERTED ON _____ TO NATURAL GAS (DAY-MONTH-YEAR) | CETTE FOURNAISE A ÉTÉ CONVERTED AU GAZ NATUREL LE_____ (JOUR-MOIS-ANNÉE) |
|---|---|
| KIT NO.: KGBPN4401VSP | DE L'ENSEMBLE Nº.: KGBPN4401VSP |
| BY: | PAR: |
| (Name and address of organization making this conversion), which accepts the responsibility that this conversion has been properly made. | (Nom et adresse de l'organisme qui a effectué la conversion), qui accepte l' entrière responsabilité de la conversion. |
| | 340071-205 REV. A |

A13203

**Fig. 15 - Conversion Responsibility Label**

**CONVERSION KIT RATING PLATE - CARRIER CORPORATION**

**THIS APPLIANCE HAS BEEN CONVERTED TO USE NATURAL GAS FOR FUEL. REFER TO KIT INSTRUCTIONS FOR CONVERSION PROCEDURES. USE PARTS SUPPLIED BY CARRIER CORPORATION AND INSTALLED BY QUALIFIED PERSONNEL. SEE EXISTING RATING PLATE FOR APPLIANCE MODEL NO. AND INPUT RATING.**

NOTE: Furnace gas input rate on rating plate is for installations up to 2000 ft. (610m) above sea level. In U.S.A. the input rating for altitudes above 2000 ft. (610m) must be derated by 2% for each 1000 ft. (305m) above sea level. In Canada the input rating must be derated (per chart below) for altitudes of 2000 ft. (610m) to 4500 ft. (1372m) above sea level.

KIT NO.: KGBPN4401VSP (SUPERSEDES: KGAPN4401VSP)

FUEL USED: NATURAL GAS

| APPLIANCE MODELS | USA % DERATE PER 1000 FT. | CANADA % DERATE FOR 2000-4500 FT. |
|---|---|---|
| 59MN7 987M | 2% | 5% |

| NATURAL GAS PRESSURE | IN. W.C. (PO C.E.) | PA |
|---|---|---|
| Max. Inlet Gas Pressure (Press. Max. D'Admission De Gaz) | 13.6 | 3,386 |
| Min. Inlet Gas Pressure (Press. Min. D'Admission De Gaz) | 4.5 | 1,121 |

(For Purpose of Input Adjustment) (Pour L'Adjustment D'Entree)

| | ALTITUDE | | | |
|---|---|---|---|---|
| Manifold Pressure | 0-2,000 ft. (0 - 610 m) | Max Heat | 3.2 - 3.8 | 797 - 946 |
| | | Min Heat | 0.50 - 0.60 | 125 - 162 |
| Pression Tubulure | 2,000 - 10,000 ft. (610 - 3050 m) | Refer to Installation Manual Respecter les Instruction D'Installation | | |

340071-201 REV. A

A13201

**Fig. 16 - Conversion Kit Rating Plate**

This control has been converted for use with natural gas.
Cette commande a été réglée pour emploi avec le gaz naturel.
340071-202 REV. A

A13207

**Fig. 17 - Gas Control Conversion Label**

## SECTION 2

**Table 5 – Variable Speed Condensing Furnaces**

| MODEL NUMBERS BEGINNING WITH: | |
|---|---|
| 59TN6 | 986T |
| 59TP6 | 926T |
| PG96V_T | |

### INSTALLATION

**⚠ WARNING**

**FIRE, EXPLOSION, ELECTRICAL SHOCK AND CARBON MONOXIDE POISONING HAZARD**

Failure to follow instructions could result in personal injury, death or property damage.

Improper installation, adjustment, alteration, service, maintenance, or use can cause carbon monoxide poisoning, explosion, fire, electrical shock, or other conditions, which could result in personal injury or death. Consult your distributor or branch for information or assistance. The qualified installer or agency must use only factory-authorized kits or accessories when servicing this product.

**⚠ WARNING**

**FIRE, EXPLOSION, ELECTRICAL SHOCK, AND CARBON MONOXIDE POISONING HAZARD**

Failure to follow this warning could result in personal injury or death.

This conversion kit shall be installed by a qualified service agency in accordance with the manufacturer's instructions and all applicable codes and requirements of the authority having jurisdiction. If the information in these instructions is not followed exactly, a fire, explosion, or production of carbon monoxide could result causing property damage, personal injury, or loss of life. The qualified service agency is responsible for the proper installation of this furnace with this kit. The installation is not proper and complete until the operation of the converted appliance is checked as specified in the manufacturer's instructions supplied with the kit.

**⚠ AVERTISSEMENT**

**LE FEU, L'EXPLOSION, CHOC ELECTRIQUE, ET MONOXYDE DE CARBONE EMPOISONNER**

Cette trousse de conversion doit être installée par un servie d'entretien qualifié, selon les instructions du fabricant et selon toutes les exigences et tous les codes pertinents de l'autorité compétente. Assurezvous de bien suivre les instructions dans cette notice pour réduire au minimum le risque d'incendie, d'explosion ou la production de monoxyde de carbone pouvant causer des dommages matériels, de blessure ou la mort. Le service d'entretien qualifié est responsable de l'installation de cette trousse. L'installation n'est pas adéquate ni complète tant que le bon fonctionnement de l'appereil converti n'a pas été vérfié selon les instructions du fabricant fornies avec la trousse.

**⚠ WARNING**

**FIRE, EXPLOSION, ELECTRICAL SHOCK HAZARD**

Failure to follow this warning could result in personal injury, death or property damage.

Gas supply MUST be shut off before disconnecting electrical power and proceeding with conversion.

**⚠ WARNING**

**ELECTRICAL SHOCK, FIRE OR EXPLOSION HAZARD**

Failure to follow this warning could result in personal injury, death or property damage.

Before installing, modifying, or servicing system, main electrical disconnect switch must be in the OFF position and install a lockout tag. There may be more than one disconnect switch. Lock out and tag switch with a suitable warning label. Verify proper operation after servicing.

1. Set room thermostat to lowest setting or "OFF".
2. Remove outer doors.
3. Disconnect power at external disconnect, fuse or circuit breaker.
4. Turn off gas at external shut-off or gas meter.
5. Remove outer doors and set aside.
6. Turn electric switch on gas valve to OFF.

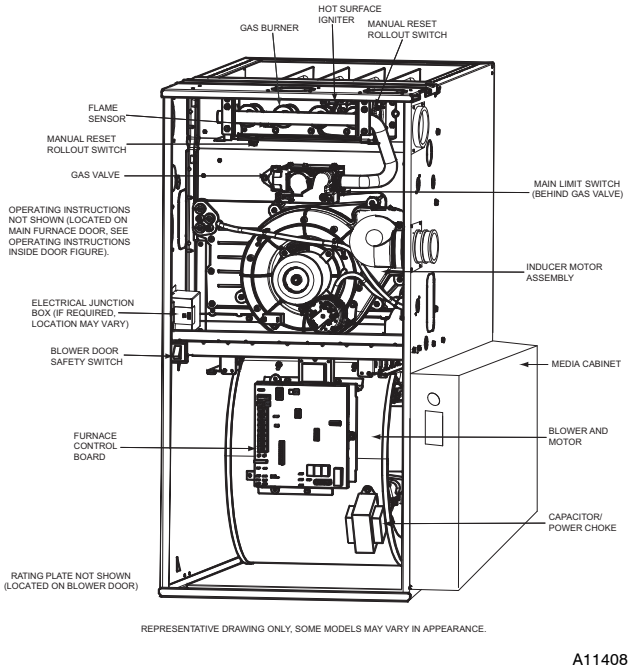


**Fig. 18 - Component Location**

## MANIFOLD/ORIFICE/BURNER REMOVAL

**⚠ CAUTION**

**UNIT OPERATION HAZARD**

Failure to follow this caution may result in unit damage or improper operation.

Label all wires prior to disconnection when servicing controls.

**⚠ PRUDENCE**

**D'EQUIPMENT D'OPERATION**

Lors des opérations d'entretien des commandes, étiqueter tous les fils avant de les déconnecter.

**NOTE**: Use a back-up wrench on the gas valve to prevent the valve from rotating on the manifold or damaging the mounting to the burner box. See Fig. 19 and 20.

1. Disconnect the gas pipe from gas valve and remove pipe from the furnace casing.
2. Disconnect the connector harness from gas valve. Disconnect wires from Hot Surface Igniter (HSI) and Flame Sensor. Disconnect the two wires from the low gas pressure switch (LGPS) located on the gas valve.
3. Support the manifold and remove the 4 screws that secure the manifold assembly to the burner box and set aside.
4. Note the location of the green/yellow wire ground wire for re-assembly later.
5. Slide one-piece burner assembly out of slots on sides of burner box.
6. Remove the flame sensor from the burner assembly.
7. Remove the orifices from the manifold and discard.

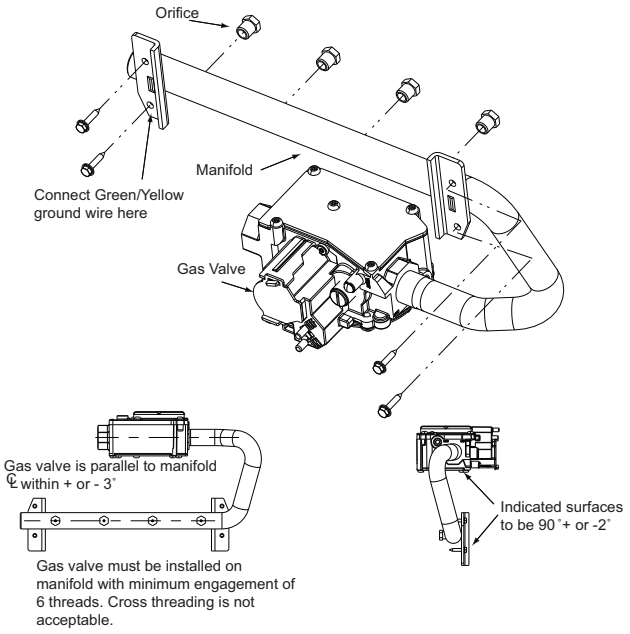


**Fig. 19 - 2 Stage Gas Valve**

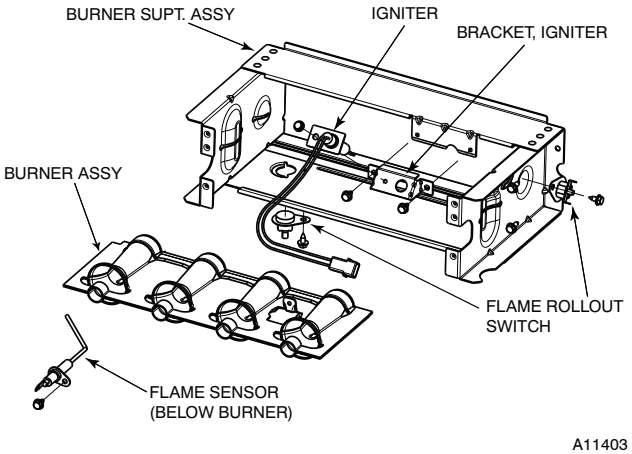


**Fig. 20 - Burner Assembly**

## ORIFICE SELECTION/DERATE

**⚠ CAUTION**

**UNIT DAMAGE HAZARD**

Failure to follow this caution may result in unit damage.

DO NOT re-drill burner orifices. Improper drilling may result in burrs, out-of-round holes, etc. Obtain new orifices if orifice size must be changed. (See Fig. 21.)

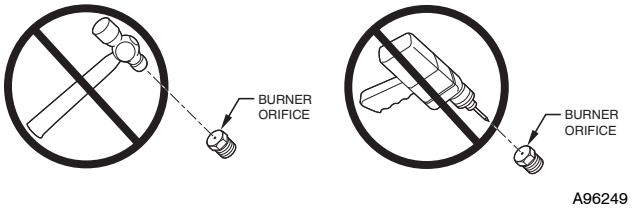


**Fig. 21 - Burner Orifice**

Determine natural gas orifice size and manifold pressures for correct input at installed altitude by using Table 5.

1. Obtain yearly heat-value average (at installed altitude) for local gas supply.
2. Obtain yearly specific-gravity average for local gas supply.
3. Find installation altitude in Table 5.

**NOTE**: For Canada altitudes of 2000 to 4500 ft. (610 to 1372 M), use U.S.A. Altitudes of 2001 to 3000 ft. (610 to 914 M) in Table 5.

4. Find closest natural gas heat value and specific gravity in Table 5.
5. Follow heat-value line and specific-gravity line to point of intersection to find orifice size and high and low manifold pressure settings.

## Table 6 – Orifice Size and Manifold Pressure (In.W.C.) for Gas Input Rate

### TWO-STAGE FURNACE

**(TABULATED DATA BASED ON 20,000 BTUH HIGH-HEAT / 13,000 BTUH LOW-HEAT PER BURNER, DERATED 2%/1000 FT (305M) ABOVE SEA LEVEL)**

| ALTITUDE RANGE ft (m) | | AVG. GAS HEAT VALUE AT ALTITUDE (Btu/cu ft) | SPECIFIC GRAVITY OF NATURAL GAS | | | | | | | |
|---|---|---|---|---|---|---|---|---|---|---|
| | | | 0.58 | | 0.60 | | 0.62 | | 0.64 | |
| | | | Orifice No. | Mnfld Press High/Low | Orifice No. | Mnfld Press High/Low | Orifice No. | Mnfld Press High/Low | Orifice No. | Mnfld Press High/Low |
| U.S.A. and Canada | 0 (0) to 2000 (610) | 900 | 43 | 3.8 / 1.6 | 42 | 3.2 / 1.4 | 42 | 3.3 / 1.4 | 42 | 3.4 / 1.4 |
| | | 925 | 43 | 3.6 / 1.5 | 43 | 3.7 / 1.6 | 43 | 3.8 / 1.6 | 42 | 3.2 / 1.4 |
| | | 950 | 43 | 3.4 / 1.4 | 43 | 3.5 / 1.5 | 43 | 3.6 / 1.5 | 43 | 3.7 / 1.6 |
| | | 975 | **44** | **3.7 / 1.6** | **44** | **3.8 / 1.6** | 43 | 3.4 / 1.5 | 43 | 3.6 / 1.5 |
| | | 1000 | **44** | **3.5 / 1.5** | **44** | **3.6 / 1.5** | **44** | **3.8 / 1.6** | 43 | 3.4 / 1.4 |
| | | 1025 | **44** | **3.3 / 1.4** | **44** | **3.5 / 1.5** | **44** | **3.6 / 1.5** | **44** | **3.7 / 1.6** |
| | | 1050 | **44** | **3.2 / 1.3** | **44** | **3.3 / 1.4** | **44** | **3.4 / 1.4** | **44** | **3.5 / 1.5** |
| | | 1075 | 45 | 3.7 / 1.6 | 45 | 3.8 / 1.6 | **44** | **3.3 / 1.4** | **44** | **3.4 / 1.4** |
| | | 1100 | 46 | 3.7 / 1.6 | 46 | 3.8 / 1.6 | 45 | 3.8 / 1.6 | **44** | **3.2 / 1.4** |
| U.S.A. and Canada | U.S.A. 2001 (611) to 3000 (914) | 800 | 42 | 3.4 / 1.4 | 42 | 3.5 / 1.5 | 42 | 3.6 / 1.5 | 42 | 3.7 / 1.6 |
| | | 825 | 43 | 3.8 / 1.6 | 42 | 3.3 / 1.4 | 42 | 3.4 / 1.4 | 42 | 3.5 / 1.5 |
| | | 850 | 43 | 3.6 / 1.5 | 43 | 3.7 / 1.6 | 42 | 3.2 / 1.3 | 42 | 3.3 / 1.4 |
| | | 875 | 43 | 3.4 / 1.4 | 43 | 3.5 / 1.5 | 43 | 3.7 / 1.5 | 43 | 3.8 / 1.6 |
| | | 900 | **44** | **3.7 / 1.6** | **44** | **3.8 / 1.6** | 43 | 3.5 / 1.5 | 43 | 3.6 / 1.5 |
| | Canada 2001 (611) to 4500 (1372) | 925 | **44** | **3.5 / 1.5** | **44** | **3.6 / 1.5** | **44** | **3.8 / 1.6** | 43 | 3.4 / 1.4 |
| | | 950 | **44** | **3.3 / 1.4** | **44** | **3.4 / 1.5** | **44** | **3.6 / 1.5** | **44** | **3.7 / 1.6** |
| | | 975 | **44** | **3.2 / 1.3** | **44** | **3.3 / 1.4** | **44** | **3.4 / 1.4** | **44** | **3.5 / 1.5** |
| | | 1000 | 46 | 3.8 / 1.6 | 45 | 3.8 / 1.6 | **44** | **3.2 / 1.4** | **44** | **3.3 / 1.4** |
| U.S.A. Only | 3001 (915) to 4000 (1219) | 775 | 42 | 3.3 / 1.4 | 42 | 3.4 / 1.4 | 42 | 3.5 / 1.5 | 42 | 3.6 / 1.5 |
| | | 800 | 43 | 3.8 / 1.6 | 42 | 3.2 / 1.4 | 42 | 3.3 / 1.4 | 42 | 3.4 / 1.4 |
| | | 825 | 43 | 3.6 / 1.5 | 43 | 3.7 / 1.6 | 43 | 3.8 / 1.6 | 42 | 3.2 / 1.4 |
| | | 850 | **44** | **3.8 / 1.6** | 43 | 3.5 / 1.5 | 43 | 3.6 / 1.5 | 43 | 3.7 / 1.6 |
| | | 875 | **44** | **3.6 / 1.5** | **44** | **3.7 / 1.6** | 43 | 3.4 / 1.4 | 43 | 3.5 / 1.5 |
| | | 900 | **44** | **3.4 / 1.4** | **44** | **3.5 / 1.5** | **44** | **3.7 / 1.5** | **44** | **3.8 / 1.6** |
| | | 925 | **44** | **3.2 / 1.4** | **44** | **3.4 / 1.4** | **44** | **3.5 / 1.5** | **44** | **3.6 / 1.5** |
| | | 950 | 45 | 3.7 / 1.6 | **44** | **3.2 / 1.3** | **44** | **3.3 / 1.4** | **44** | **3.4 / 1.4** |
| U.S.A. Only | 4001 (1220) to 5000 (1524) | 750 | 42 | 3.3 / 1.4 | 42 | 3.4 / 1.4 | 42 | 3.5 / 1.5 | 42 | 3.6 / 1.5 |
| | | 775 | 43 | 3.7 / 1.6 | 43 | 3.8 / 1.6 | 42 | 3.3 / 1.4 | 42 | 3.4 / 1.4 |
| | | 800 | 43 | 3.5 / 1.5 | 43 | 3.6 / 1.5 | 43 | 3.7 / 1.6 | 43 | 3.8 / 1.6 |
| | | 825 | **44** | **3.8 / 1.6** | 43 | 3.4 / 1.4 | 43 | 3.5 / 1.5 | 43 | 3.6 / 1.5 |
| | | 850 | **44** | **3.5 / 1.5** | **44** | **3.7 / 1.5** | **44** | **3.8 / 1.6** | 43 | 3.4 / 1.4 |
| | | 875 | **44** | **3.3 / 1.4** | **44** | **3.5 / 1.5** | **44** | **3.6 / 1.5** | **44** | **3.7 / 1.6** |
| | | 900 | **44** | **3.2 / 1.3** | **44** | **3.3 / 1.4** | **44** | **3.4 / 1.4** | **44** | **3.5 / 1.5** |
| | | 925 | 46 | 3.8 / 1.6 | 45 | 3.7 / 1.6 | **44** | **3.2 / 1.4** | **44** | **3.3 / 1.4** |
| U.S.A. Only | 5001 (1525) to 6000 (1829) | 725 | 42 | 3.2 / 1.4 | 42 | 3.3 / 1.4 | 42 | 3.4 / 1.5 | 42 | 3.5 / 1.5 |
| | | 750 | 43 | 3.7 / 1.5 | 43 | 3.8 / 1.6 | 42 | 3.2 / 1.4 | 42 | 3.3 / 1.4 |
| | | 775 | 43 | 3.4 / 1.4 | 43 | 3.5 / 1.5 | 43 | 3.7 / 1.5 | 43 | 3.8 / 1.6 |
| | | 800 | **44** | **3.7 / 1.6** | **44** | **3.8 / 1.6** | 43 | 3.4 / 1.5 | 43 | 3.5 / 1.5 |
| | | 825 | **44** | **3.5 / 1.5** | **44** | **3.6 / 1.5** | **44** | **3.7 / 1.6** | **44** | **3.8 / 1.6** |
| | | 850 | **44** | **3.3 / 1.4** | **44** | **3.4 / 1.4** | **44** | **3.5 / 1.5** | **44** | **3.6 / 1.5** |
| | | 875 | 45 | 3.7 / 1.6 | **44** | **3.2 / 1.3** | **44** | **3.3 / 1.4** | **44** | **3.4 / 1.4** |
| | | 900 | 46 | 3.7 / 1.6 | 46 | 3.8 / 1.6 | 45 | 3.8 / 1.6 | **44** | **3.2 / 1.4** |
| U.S.A. Only | 6001 (1830) to 7000 (2133) | 675 | 42 | 3.4 / 1.4 | 42 | 3.5 / 1.5 | 42 | 3.6 / 1.5 | 42 | 3.8 / 1.6 |
| | | 700 | 42 | 3.2 / 1.3 | 42 | 3.3 / 1.4 | 42 | 3.4 / 1.4 | 42 | 3.5 / 1.5 |
| | | 725 | 43 | 3.6 / 1.5 | 43 | 3.7 / 1.6 | 43 | 3.8 / 1.6 | 42 | 3.3 / 1.4 |
| | | 750 | 43 | 3.4 / 1.4 | 43 | 3.5 / 1.5 | 43 | 3.6 / 1.5 | 43 | 3.7 / 1.6 |
| | | 775 | **44** | **3.6 / 1.5** | **44** | **3.7 / 1.6** | 43 | 3.4 / 1.4 | 43 | 3.5 / 1.5 |
| | | 800 | **44** | **3.4 / 1.4** | **44** | **3.5 / 1.5** | **44** | **3.6 / 1.5** | **44** | **3.7 / 1.6** |
| | | 825 | **44** | **3.2 / 1.3** | **44** | **3.3 / 1.4** | **44** | **3.4 / 1.4** | **44** | **3.5 / 1.5** |
| | | 850 | 46 | 3.8 / 1.6 | 45 | 3.8 / 1.6 | **44** | **3.2 / 1.4** | **44** | **3.3 / 1.4** |

A11252A

**Table 5 – Orifice Size and Manifold Pressure (In.W.C.) for Gas Input Rate (Continued)**

**TWO-STAGE FURNACE**

**(TABULATED DATA BASED ON 20,000 BTUH HIGH-HEAT / 13,000 BTUH LOW-HEAT PER BURNER, DERATED 2%/1000 FT (305M) ABOVE SEA LEVEL)**

| ALTITUDE RANGE ft (m) | | AVG. GAS HEAT VALUE AT ALTITUDE (Btu/cu ft) | SPECIFIC GRAVITY OF NATURAL GAS | | | | | | | |
|---|---|---|---|---|---|---|---|---|---|---|
| | | | 0.58 | | 0.60 | | 0.62 | | 0.64 | |
| | | | Orifice No. | Mnfld Press High/Low | Orifice No. | Mnfld Press High/Low | Orifice No. | Mnfld Press High/Low | Orifice No. | Mnfld Press High/Low |
| U.S.A. Only | | 650 | 42 | 3.4 / 1.4 | 42 | 3.5 / 1.5 | 42 | 3.6 / 1.5 | 42 | 3.7 / 1.6 |
| | 7001 | 675 | 43 | 3.8 / 1.6 | 42 | 3.2 / 1.4 | 42 | 3.3 / 1.4 | 42 | 3.4 / 1.5 |
| | (2134) | 700 | 43 | 3.5 / 1.5 | 43 | 3.7 / 1.5 | 43 | 3.8 / 1.6 | 42 | 3.2 / 1.4 |
| | to | 725 | **44** | **3.8 / 1.6** | 43 | 3.4 / 1.4 | 43 | 3.5 / 1.5 | 43 | 3.6 / 1.5 |
| | | 750 | **44** | **3.5 / 1.5** | **44** | **3.7 / 1.5** | **44** | **3.8 / 1.6** | 43 | 3.4 / 1.4 |
| | 8000 | 775 | **44** | **3.3 / 1.4** | **44** | **3.4 / 1.4** | **44** | **3.5 / 1.5** | **44** | **3.7 / 1.5** |
| | (2438) | 800 | 45 | 3.8 / 1.6 | **44** | **3.2 / 1.4** | **44** | **3.3 / 1.4** | **44** | **3.4 / 1.4** |
| | | 825 | 46 | 3.7 / 1.6 | 46 | 3.8 / 1.6 | 45 | 3.8 / 1.6 | **44** | **3.2 / 1.4** |
| U.S.A. Only | | 625 | 42 | 3.4 / 1.4 | 42 | 3.5 / 1.5 | 42 | 3.6 / 1.5 | 42 | 3.7 / 1.6 |
| | 8001 | 650 | 43 | 3.8 / 1.6 | 42 | 3.2 / 1.4 | 42 | 3.3 / 1.4 | 42 | 3.4 / 1.4 |
| | (2439) | 675 | 43 | 3.5 / 1.5 | 43 | 3.6 / 1.5 | 43 | 3.7 / 1.6 | 42 | 3.2 / 1.3 |
| | to | 700 | **44** | **3.7 / 1.6** | 43 | 3.4 / 1.4 | 43 | 3.5 / 1.5 | 43 | 3.6 / 1.5 |
| | | 725 | **44** | **3.5 / 1.5** | **44** | **3.6 / 1.5** | **44** | **3.7 / 1.6** | **44** | **3.8 / 1.6** |
| | 9000 | 750 | **44** | **3.3 / 1.4** | **44** | **3.4 / 1.4** | **44** | **3.5 / 1.5** | **44** | **3.6 / 1.5** |
| | (2743) | 775 | 45 | 3.7 / 1.6 | **44** | **3.2 / 1.3** | **44** | **3.3 / 1.4** | **44** | **3.4 / 1.4** |
| U.S.A. Only | 9001 | 600 | 42 | 3.3 / 1.4 | 42 | 3.4 / 1.5 | 42 | 3.6 / 1.5 | 42 | 3.7 / 1.6 |
| | (2744) | 625 | 43 | 3.7 / 1.6 | 42 | 3.2 / 1.3 | 42 | 3.3 / 1.4 | 42 | 3.4 / 1.4 |
| | to | 650 | 43 | 3.5 / 1.5 | 43 | 3.6 / 1.5 | 43 | 3.7 / 1.6 | 43 | 3.8 / 1.6 |
| | | 675 | **44** | **3.7 / 1.6** | **44** | **3.8 / 1.6** | 43 | 3.4 / 1.4 | 43 | 3.5 / 1.5 |
| | 10000 | 700 | **44** | **3.4 / 1.4** | **44** | **3.5 / 1.5** | **44** | **3.7 / 1.5** | **44** | **3.8 / 1.6** |
| | (3048) | 725 | **44** | **3.2 / 1.3** | **44** | **3.3 / 1.4** | **44** | **3.4 / 1.4** | **44** | **3.5 / 1.5** |

* Orifice numbers shown in **BOLD** are factory-installed.

Furnace gas input rate on furnace rating plate is for installations at altitudes up to 2000 ft. (610 M).

**In the U.S.A.**; the input rating for altitudes above 2000 ft. (610 M) must be reduced by 2 percent for each 1000 ft. (305 M) above sea level.

**In Canada**, the input rating must be derated by 5 percent for altitudes of 2000 ft. to 4500 ft. (610 M to 1372 M) above sea level.

The Conversion Kit Rating Plate accounts for high altitude derate.

## INSTALL ORIFICES

1. Install main burner orifices. DO NOT use Teflon tape. Finger-tighten orifices at least one full turn to prevent cross-threading, then tighten with wrench.
2. There are enough orifices in each kit for largest furnace. Discard extra orifices.

**NOTE**: DO NOT reinstall the manifold at this time.

## REMOVE MIXER SCREWS FROM THE BURNERS

Each burner contains a mixer screw that must be removed. Refer to Fig. 22 for the mixer screw location

1. Remove the mixer screws from the burners.

**NOTE**: It is not necessary to plug the hole in the burner when the mixer screws are removed.

A11252B

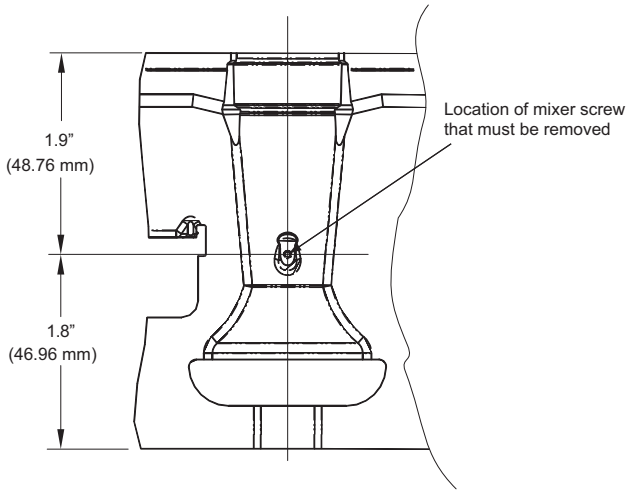


A11501

**Fig. 22 – Mixer Screw Location**

## REINSTALL BURNER ASSEMBLY

To reinstall burner assembly:

1. Attach flame sensor to burner assembly.
2. Insert one-piece burner in slot on sides of burner box and slide burner back in place.
3. Reattach HSI wires to HSI.
4. Verify igniter to burner alignment. See Fig. 23 and 24.

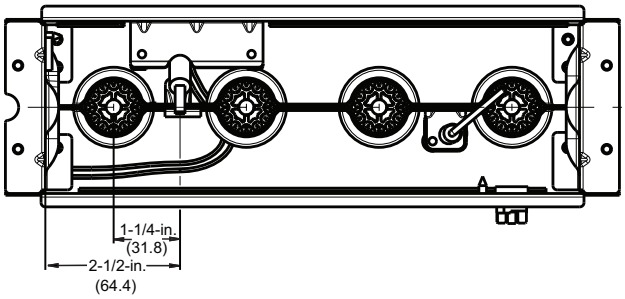


**Fig. 23 - Igniter Position - Back View**

A11405

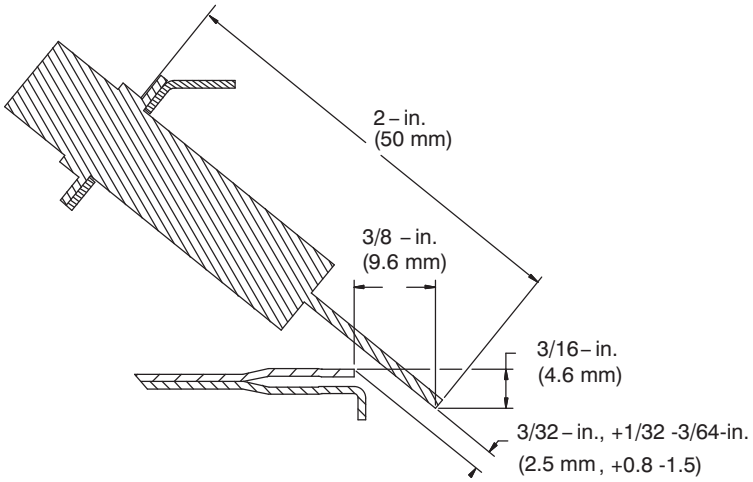


A12392

**Fig. 24 - Igniter Position - Side View**

## CONVERT GAS VALVE

**⚠ CAUTION**

**UNIT DAMAGE HAZARD**

Failure to follow this caution may result in unit damage

The G or J gas valve must be converted and pre-adjusted before operating on natural gas. The E valves must be pre-adjusted before operating on natural gas. If left this way, sooting and corrosion will occur leading to early heat exchanger failure.

**⚠ WARNING**

**FIRE, EXPLOSION, ELECTRICAL SHOCK HAZARD**

Failure to follow this warning could result in personal injury, death or property damage.

Gas supply MUST be shut off before disconnecting electrical power and proceeding with conversion.

**⚠ WARNING**

**ELECTRICAL SHOCK, FIRE OR EXPLOSION HAZARD**

Failure to follow this warning could result in personal injury, death or property damage.

Before installing, modifying, or servicing system, main electrical disconnect switch must be in the OFF position and install a lockout tag. There may be more than one disconnect switch. Lock out and tag switch with a suitable warning label. Verify proper operation after servicing.

1. Refer to Fig. 25.
2. Be sure gas and electrical supplies to furnace are off.
3. Remove caps that conceal adjustment screws for high-heat and low-heat stage gas valve regulators. (See Fig. 25.)
4. Remove the high-heat and low-heat regulator adjustment screws.
5. Remove the high-heat and low-heat Propane gas regulator springs (white).
6. Install the high-heat and low-heat natural gas regulator springs (silver).
7. Install the high-heat and low-heat regulator adjustment screws.
8. Turn high-heat stage adjusting screw clockwise (in) 12 full turns. This will increase the manifold pressure closer to the natural high-heat set point. (See Fig. 25.)
9. Turn low-heat stage adjusting screw clockwise (in) 9.5 full turns. This will increase the manifold pressure closer to the Propane low-heat set point. (See Fig. 25.)
10. DO NOT install regulator seal caps at this time.

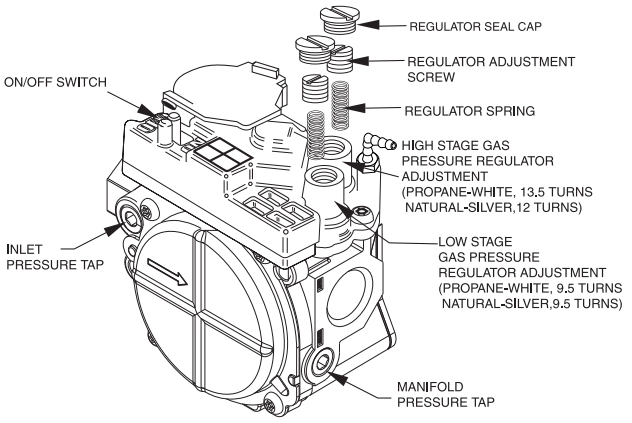


A05196

**Fig. 25 - 2 Stage Gas valve**

## REMOVE LOW GAS PRESSURE SWITCH

**NOTE**: There are 2 ways that the Low Gas Pressure Switch (LGPS) could have been installed during the original Natural to Propane gas conversion.

**All 14 3/16-in (360 mm) Casings or Vent Passes Between Inducer Assembly and Burner Assembly**

If the vent pipe passes between the inducer and burner assembly, or the furnace is a 14 3/16-in. (360 mm) wide casing, the switch may have been installed as follows. (See Fig 26.)

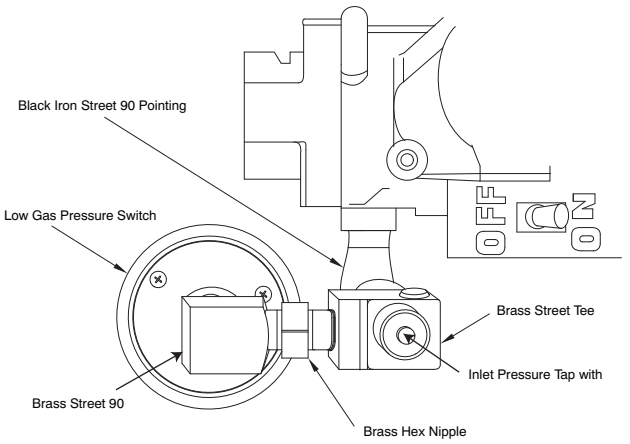


A11367

**Fig. 26 - LGPS for 14-3/16-in. (360 mm) Casing or When Vent Passes Between Inducer and Burner Assembly**

1. Remove low-gas pressure switch, brass street 90° elbow, brass Hex nipple, brass tee and black iron street 90° elbow from the gas valve inlet pressure tap. (See Fig 26.)

**NOTE**: Use pipe dope approved for use with Propane gas. DO NOT use Teflon tape.

2. Apply pipe dope sparingly to the 1/8-in. NPT pipe plug (provided in kit) and install in the 1/8-in. tapped inlet-pressure tap opening in the gas valve. DO NOT over-tighten. Check for gas leaks after gas supply has been turned on.

## ⚠ WARNING

**FIRE AND EXPLOSION HAZARD**

Failure to follow this warning could result in personal injury and/or death.

NEVER test for gas leaks with an open flame. Use a commercially available soap solution made specifically for the detection of leaks to check all connections. A fire or explosion may result causing property damage, personal injury or loss of life.

## ⚠ AVERTISSEMENT

**RISQUE D'EXPLOSION ET D'INCENDIE**

Le fait de ne pas suivre cet avertissement pourrait entraîner des dommages corporels et / ou la mort.

Ne jamais examiner pour les fuites de gaz avec une flamme vive. Utilisez plutôt un savon fait specifiquement pour la détection des fuites de gaz pour verifier tous les connections. Un incendie ou une explosion peut entrainer des dommages matériels, des blessures ou la mort.

**Casings Wider Than 14 3/16-in. (360 mm) / Vent Does Not Pass Between Inducer and Burner Assembly**

If the vent pipe does not pass between the inducer and burner assembly, or the furnace is wider than a 14 3/16-in. (360 mm) wide casing, the switch may have been installed as follows. (See Fig 27.)

1. Remove low-gas pressure switch, brass street 90° elbow, brass Hex nipple, brass Tee and brass nipple from the gas valve inlet pressure tap. (See Fig 27.)

**NOTE**: Use pipe dope approved for use with Propane gas. DO NOT use Teflon tape.

2. Apply pipe dope sparingly to the 1/8-in. NPT pipe plug (provided in kit) and install in the 1/8-in. tapped inlet-pressure tap opening in the gas valve. DO NOT over-tighten. Check for gas leaks after gas supply has been turned on.

For larger casing when Vent Pipe does not pass across casing. All Sizes switch contacts must point toward the Cell Panel. Black Iron Street 90 can be used at Valve Inlet instead of Brass Street 90.

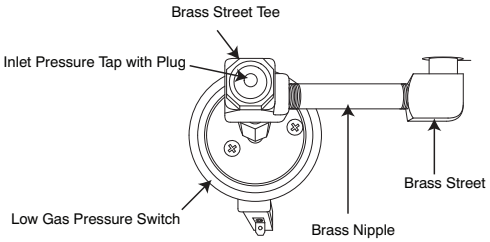


A11366

**Fig. 27 - LGPS for Casing Wider Than 14-3/16 and Vent Does Not Pass Between Inducer and Burner Assembly**

## INSTALL MANIFOLD

1. Align the orifices in the manifold assembly with the support rings on the end of the burner.
2. Insert the orifices in the support rings of the burners. Manifold mounting tabs should fit flush against the burner box.

**NOTE**: If manifold does not fit flush against the burner box, the burners are not fully seated forward. Remove the manifold and check burner positioning in the burner box assembly.

3. Attach the green/yellow wire and ground terminal to one of the manifold mounting screws.
4. Install the remaining manifold mounting screws.
5. Connect the wires to the flame sensor and hot surface igniter.
6. Connect the connector harness to gas valve.
7. Rewire unit low pressure switch (LPS) as follows:
   a. Trace one of the orange wires previously disconnected from the LGPS back to the NO terminals of the LPS.
   b. Trace the other orange wire previously disconnected from the LGPS back to its splice connection with the yellow wire of the furnace wire harness. Disconnect and discard this orange wire and the splice connection.
   c. Connect the yellow wire of the furnace wire harness (see "b" above) to the NO terminal of the LPS.
   d. Refer to the furnace wiring diagram ensure proper location of wires.

**NOTE**: Use only Propane-resistant pipe dope. DO NOT use Teflon tape.

8. Insert the gas pipe through the grommet in the casing. Apply a thin layer of pipe dope to the threads of the pipe and thread the pipe into the gas valve.

**NOTE**: Use a back-up wrench on the gas valve to prevent the valve from rotating on the manifold or damaging the mounting to the burner box.

9. With a back-up wrench on the inlet boss of the gas valve, finish tightening the gas pipe to the gas valve.
10. Turn gas on at electric switch on gas valve.

## CHECK INLET GAS PRESSURE

**⚠ CAUTION**

**UNIT DAMAGE HAZARD**

Failure to follow this caution may result in unit damage.

DO NOT operate furnace more than one minute to check inlet gas pressure, as conversion is not complete at this time.

**NOTE**: This kit is to be used only when inlet gas pressure is between 4.5-in. W.C. and 13.6-in. W.C.

1. Verify manometer is connected to inlet pressure tap on gas valve.
2. Turn on furnace power supply.
3. Turn gas supply manual shutoff valve to ON position.
4. Turn furnace gas valve switch to ON position.
5. Turn Setup Switch SW1-2 on furnace control ON (see Fig. 28).

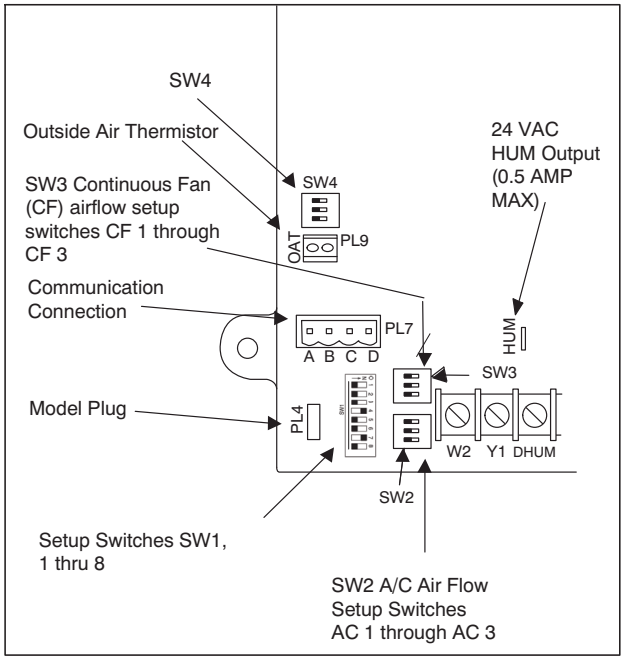


**Fig. 28 - Furnace Control**

6. Jumper R-W/W1 and R-W2 thermostat connections on control.
7. When main burners ignite, confirm inlet gas pressure is between 4.5-in. W.C. and 13.6-in. W.C.
8. Remove jumper across R-W/W1 and R-W2 thermostat connections to terminate call for heat.
9. Turn furnace gas valve switch to OFF position.
10. Turn gas supply manual shutoff valve to OFF position.
11. Turn off furnace power supply.
12. Remove manometer.
13. Apply pipe dope sparingly to the 1/8-in. NPT pipe plug and install in the 1/8-in. tapped inlet-pressure tap opening in the gas valve. DO NOT over-tighten. Check for gas leaks after gas supply has been turned on.

## CHECK FURNACE AND MAKE ADJUSTMENTS

**⚠ WARNING**

**FIRE AND EXPLOSION HAZARD**

Failure to follow this warning could result in personal injury and/or death.

NEVER test for gas leaks with an open flame. Use a commercially available soap solution made specifically for the detection of leaks to check all connections. A fire or explosion may result causing property damage, personal injury or loss of life.

**⚠ AVERTISSEMENT**

**RISQUE D'EXPLOSION ET D'INCENDIE**

Le fait de ne pas suivre cet avertissement pourrait entraîner des dommages corporels et / ou la mort.

Ne jamais examiner pour les fuites de gaz avec une flamme vive. Utilisez plutôt un savon fait specifiquement pour la détection des fuites de gaz pour verifier tous les connections. Un incendie ou une explosion peut entrainer des dommages matériels, des blessures ou la mort.

**⚠ WARNING**

**FIRE, EXPLOSION, ELECTRICAL SHOCK HAZARD**

Failure to follow this warning could result in personal injury, death or property damage.

Gas supply MUST be shut off before disconnecting electrical power and proceeding with conversion.

**⚠ WARNING**

**ELECTRICAL SHOCK, FIRE OR EXPLOSION HAZARD**

Failure to follow this warning could result in personal injury, death or property damage.

Before installing, modifying, or servicing system, main electrical disconnect switch must be in the OFF position and install a lockout tag. There may be more than one disconnect switch. Lock out and tag switch with a suitable warning label. Verify proper operation after servicing.

1. Be sure main gas and electric supplies to furnace are off.
2. Remove 1/8-in. NPT pipe plug from manifold pressure tap on downstream side of gas valve.
3. Attach manometer to manifold pressure tap on gas valve. (See Fig. 25.)
4. Turn gas supply manual shutoff valve to ON position.
5. Turn furnace gas valve switch to ON position.
6. Check all threaded pipe connections for gas leaks.
7. Turn on furnace power supply.

## GAS INPUT RATE INFORMATION

See furnace rating plate on blower door for input rate. The input rate for natural gas is determined by manifold pressure and orifice size.

Determine natural gas orifice size and manifold pressures for correct input at installed altitude by using Table 5.

1. Obtain yearly heat-value average (at installed altitude) for local gas supply.
2. Obtain yearly specific-gravity average for local gas supply.
3. Find installation altitude in Table 5.

**NOTE**: For Canada altitudes of 2000 to 4500 ft. (610 to 1372 M), use U.S.A. Altitudes of 2001 to 3000 ft. (610 to 914 M) in Table 5.

Furnace gas input rate on rating plate is for installations at altitudes up to 2000 ft. (610 M).

In the U.S.A., the input rating for altitudes above 2000 ft. (610M) must be reduced by 2 percent for each 1000 ft. (305 M) above sea level.

In Canada, the input rating must be derated by 5 percent for altitudes of 2000 ft. (610 M) to 4500 ft. (1372 M) above sea level.

The Conversion Kit Rating Plate accounts for high altitude derate.

## SET GAS INPUT RATE

1. Make sure the gas supply is turned off to the furnace and at the electric switch on the gas valve.
2. Remove the 1/8 inch NPT plug from the outlet pressure tap on the gas valve.
3. Connect a manometer to the outlet pressure tap on gas valve.
4. Turn on furnace power supply.
5. Turn gas supply manual shutoff valve to ON position.
6. Turn furnace gas valve switch to ON position.
7. Verify SW1-2 on furnace control is turned “ON”.
8. Jumper R and W/W1 thermostat connections to call for heat.
9. Check manifold orifices for gas leaks when main burners ignite.
10. Adjust gas manifold pressure. Refer to Table 5.
11. Remove caps that conceal the adjustment screws for gas valve regulators. See Fig. 25.
12. Adjust low-heat manifold pressure for natural gas. See Fig. 25.
13. Turn low-heat adjusting screw counterclockwise (out) to decrease input rate or clockwise (in) to increase input rate.

**NOTE**: When correct input is obtained, main burner flame should be clear blue, almost transparent (see Fig. 29).

14. Jumper R, W/W1 and W2 on control center thermostat connections. This keeps furnace locked in high-heat operation.
15. Adjust high-heat manifold pressure for natural gas.
16. Turn high-heat adjusting screw counterclockwise (out) to decrease input rate or clockwise (in) to increase input rate.
17. Replace caps that conceal the gas valve regulator adjustment screws.

**NOTE**: When correct input is obtained, main burner flame should be clear blue, almost transparent (see Fig. 29).

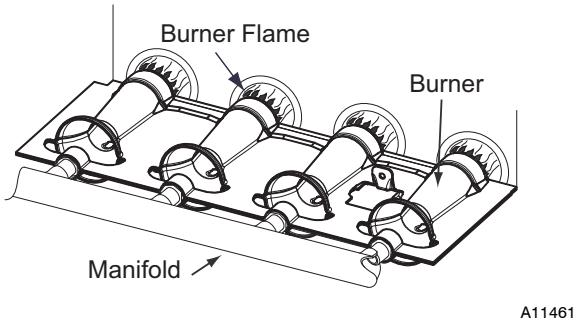


**Fig. 29 - Burner Flame**

18. Remove jumper across R, W1, and W2 after high-heat adjustment to terminate call for heat.
19. Turn setup switch SW1-2 on furnace control to OFF position.
20. Turn furnace gas valve switch to OFF position.
21. Turn off furnace power supply.
22. Remove manometer and re-install manifold pressure tap plug.
23. Turn furnace gas valve switch to ON position.
24. Turn on furnace power supply.
25. Set room thermostat to call for heat.
26. Check pressure tap plug for gas leaks when main burners ignite.
27. Check for correct burner flame.
28. After making the required manifold pressure adjustments, check and adjust the furnace temperature rise per the furnace installation instructions.

## LABEL APPLICATION

1. Fill in Conversion Responsibility Label 340071-205 and apply to Blower Access Door of furnace as shown. (See Fig. 30.) Date, name, and address of organization making this conversion are required.
2. Attach Conversion Rating Plate Label 340071-206, see Fig. 31, to Outer Door of furnace.
3. Attach Gas Control Conversion label 340071-202 to gas valve. DO NOT use 340071-203, which is similar.

## CHECKOUT

1. Observe unit operation through 2 complete heating cycles.
2. See Sequence of Operation operation in furnace Installation, Start-Up, and Operating Instructions.
3. Set room thermostat to desired temperature.

| THIS FURNACE WAS CONVERTED ON _____ TO NATURAL GAS (DAY-MONTH-YEAR) | CETTE FOURNAISE A ÉTÉ CONVERTED AU GAZ NATUREL LE_____ (JOUR-MOIS-ANNÉE) |
|---|---|
| KIT NO.: KGBPN4401VSP | DE L'ENSEMBLE Nº.: KGBPN4401VSP |
| BY: | PAR: |
| (Name and address of organization making this conversion), which accepts the responsibility that this conversion has been properly made. | (Nom et adresse de l'organisme qui a effectué la conversion), qui accepte l' entrière responsabilité de la conversion. 340071-205 REV. A |

A13203

**Fig. 30 - Conversion Responsibility Label**

**CONVERSION KIT RATING PLATE - CARRIER CORPORATION**

**THIS APPLIANCE HAS BEEN CONVERTED TO USE NATURAL GAS FOR FUEL. REFER TO KIT INSTRUCTIONS FOR CONVERSION PROCEDURES. USE PARTS SUPPLIED BY CARRIER CORPORATION AND INSTALLED BY QUALIFIED PERSONNEL. SEE EXISTING RATING PLATE FOR APPLIANCE MODEL NO. AND INPUT RATING.**

NOTE: Furnace gas input rate on rating plate is for installations up to 2000 ft. (610m) above sea level. In U.S.A. the input rating for altitudes above 2000 ft. (610m) must be derated by 2% for each 1000 ft. (305m) above sea level. In Canada the input rating must be derated (per chart below) for altitudes of 2000 ft. (610m) to 4500 ft. (1372m) above sea level.

KIT NO.: KGBPN4401VSP (SUPERSEDES: KGAPN4401VSP)

FUEL USED: NATURAL GAS

| APPLIANCE MODELS | USA % DERATE PER 1000 FT. | CANADA % DERATE FOR 2000-4500 FT. |
|---|---|---|
| 59TP6, 59TN6, 926T, 986T PG96V_T | 2% | 5% |

| NATURAL GAS PRESSURE | IN. W.C. (PO C.E.) | PA |
|---|---|---|
| Max. Inlet Gas Pressure (Press. Max. D'Admission De Gaz) | 13.6 | 3,386 |
| Min. Inlet Gas Pressure (Press. Min. D'Admission De Gaz) | 4.5 | 1,121 |

(For Purpose of Input Adjustment) (Pour L'Adjustment D'Entree)

| | ALTITUDE | | | |
|---|---|---|---|---|
| Manifold Pressure | 0-2,000 ft. (0 - 610 m) | High Heat | 3.2 - 3.8 | 797 - 946 |
| | | Low Heat | 1.4 - 1.8 | 349 - 448 |
| Pression Tubulure | 2,000 - 10,000 ft. (610 - 3050 m) | Refer to Installation Manual Respecter les Instruction D'Installation | | |

340071-206 REV. A

A13204

**Fig. 31 - Conversion Kit Rating Plate**

This control has been converted for use with natural gas.
Cette commande a été réglée pour emploi avec le gaz naturel.
340071-202 REV. A

A13207

**Fig. 32 - Gas Control Conversion Label**

## SECTION 3

**Table 7 – Non-condensing Furnaces**

| MODEL NUMBERS BEGINNING WITH: | |
|---|---|
| 58CTW | 314AAV |
| 58CVA | 315AAV |
| 58CVX | 315JAV |
| PG8MVA | PG8JVA |

### INSTALLATION

**⚠ WARNING**

**FIRE, EXPLOSION, ELECTRICAL SHOCK AND CARBON MONOXIDE POISONING HAZARD**

Failure to follow instructions could result in personal injury, death or property damage.

Improper installation, adjustment, alteration, service, maintenance, or use can cause carbon monoxide poisoning, explosion, fire, electrical shock, or other conditions, which could result in personal injury or death. Consult your distributor or branch for information or assistance. The qualified installer or agency must use only factory-authorized kits or accessories when servicing this product.

**⚠ WARNING**

**FIRE, EXPLOSION, ELECTRICAL SHOCK, AND CARBON MONOXIDE POISONING HAZARD**

Failure to follow this warning could result in personal injury or death.

This conversion kit shall be installed by a qualified service agency in accordance with the manufacturer's instructions and all applicable codes and requirements of the authority having jurisdiction. If the information in these instructions is not followed exactly, a fire, explosion, or production of carbon monoxide could result causing property damage, personal injury, or loss of life. The qualified service agency is responsible for the proper installation of this furnace with this kit. The installation is not proper and complete until the operation of the converted appliance is checked as specified in the manufacturer's instructions supplied with the kit.

**⚠ AVERTISSEMENT**

**LE FEU, L'EXPLOSION, CHOC ELECTRIQUE, ET MONOXYDE DE CARBONE EMPOISONNER**

Cette trousse de conversion doit être installée par un servie d'entretien qualifié, selon les instructions du fabricant et selon toutes les exigences et tous les codes pertinents de l'autorité compétente. Assurezvous de bien suivre les instructions dans cette notice pour réduire au minimum le risque d'incendie, d'explosion ou la production de monoxyde de carbone pouvant causer des dommages matériels, de blessure ou la mort. Le service d'entretien qualifié est responsable de l'installation de cette trousse. L'installation n'est pas adéquate ni complète tant que le bon fonctionnement de l'appereil converti n'a pas été vérfié selon les instructions du fabricant fornies avec la trousse.

**⚠ WARNING**

**FIRE, EXPLOSION, ELECTRICAL SHOCK HAZARD**

Failure to follow this warning could result in personal injury, death or property damage.

Gas supply MUST be shut off before disconnecting electrical power and proceeding with conversion.

1. Set room thermostat to lowest setting or "OFF".
2. Remove outer doors.
3. Disconnect power at external disconnect, fuse or circuit breaker.
4. Turn off gas at external shut-off or gas meter.
5. Remove outer doors and set aside.
6. Turn electric switch on gas valve to OFF.

### MANIFOLD/ORIFICE/BURNER REMOVAL

**⚠ CAUTION**

**UNIT OPERATION HAZARD**

Failure to follow this caution may result in unit damage or improper operation.

Label all wires prior to disconnection when servicing controls.

**⚠ PRUDENCE**

**D'EQUIPEMENT D'OPERATION**

Toute erreur de câblage peut être une source de danger et de panne.

Lors des opérations d'entretien des commandes, étiqueter tous les fils avant de les déconnecter.

**NOTE**: Use a back-up wrench on the gas valve to prevent the valve from rotating on the manifold or damaging the mounting to the burner box. See Fig. 33 and 34.

1. Disconnect the gas pipe from gas valve and remove pipe from the furnace casing.
2. Disconnect the connector harness from gas valve. Disconnect wires from Hot Surface Igniter (HSI) and Flame Sensor. Disconnect the two wires from the low gas pressure switch (LGPS) located on the gas valve.
3. Support the manifold and remove the 4 screws that secure the manifold assembly to the burner box and set aside.
4. Note the location of the green/yellow wire ground wire for re-assembly later.
5. Slide one-piece burner assembly out of slots on sides of burner box.
6. Remove the flame sensor from the burner assembly.
7. Remove the orifices from the manifold and discard.

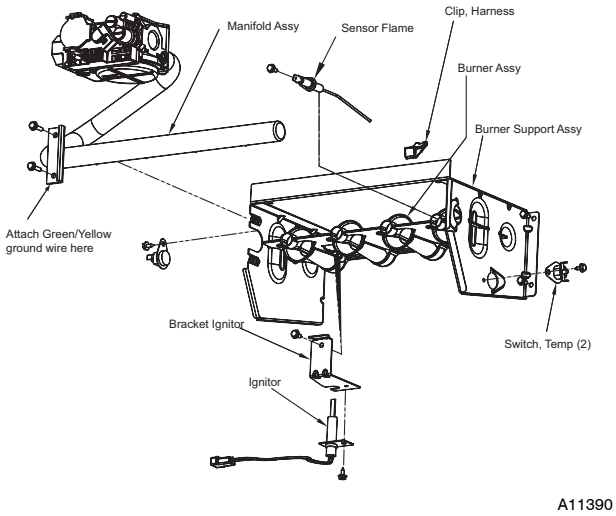


**Fig. 33 - 80% Burners**

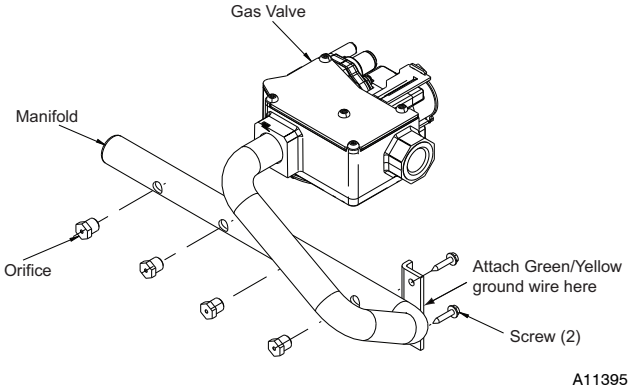


**Fig. 34 - 80% Manifold**

## NOx DEVICE INSTALLATION (when required)

The following models must have NOx baffles installed (58CVX and 315JAV). NOx baffles are not included in this kit and must be ordered separately or reused if retained from original conversion to Propane.

For NOx device installation, follow these additional steps:

1. Remove the screw underneath the heat exchanger inlet that secures the NOx device in the heat exchanger. (See Fig. 35.)

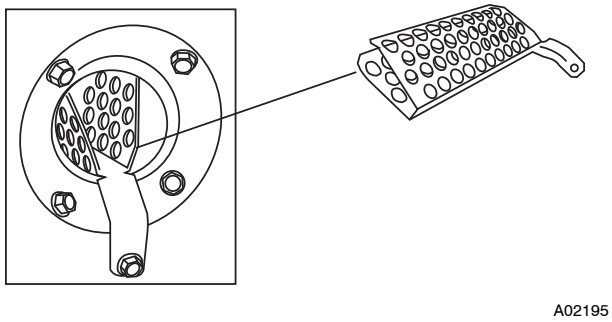


**Fig. 35 - NOx Device**

2. Use a pair of needle nose pliers to install the NOx device.
3. Squeeze the sides of the device, if necessary, to install in the heat exchanger.
4. Re-install screw in hole underneath heat exchanger inlet.

**NOTE**: It is very IMPORTANT to reinstall the NOx bracket mounting screw.

5. Repeat steps for each heat exchanger.

## ORIFICE SELECTION/DERATE

**⚠ CAUTION**

**UNIT DAMAGE HAZARD**

Failure to follow this caution may result in unit damage.

DO NOT re-drill burner orifices. Improper drilling may result in burrs, out-of-round holes, etc. Obtain new orifices if orifice size must be changed. (Fig. 36.)

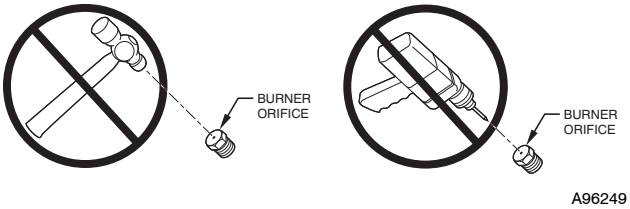


**Fig. 36 - Burner Orifice**

Determine natural gas orifice size and manifold pressures for correct input at installed altitude by using Table 7 or 8.

**NOTE**: All models in all positions except Low NOx models in downflow and horizontal positions use Table 7 (22,000 Btuh per burner). Low NOx models in downflow or horizontal positions must use Table 8 (21,000 Btuh per burner). See input listed on rating plate.

1. Obtain yearly heat-value average (at installed altitude) for local gas supply.
2. Obtain yearly specific-gravity average for local gas supply.
3. Find installation altitude in Table 7 or 8.

**NOTE**: For Canada altitudes of 2000 to 4500 ft. (610 to 1372 M), use U.S.A. Altitudes of 2001 to 3000 ft. (610 to 914 M) in Table 7 or 8.

4. Find closest natural gas heat value and specific gravity in Table 7 or 8.
5. Follow heat-value line and specific-gravity line to point of intersection to find orifice size and high and low manifold pressure settings.

Furnace gas input rate on furnace rating plate is for installations at altitudes up to 2000 ft. (610 M).

**In the U.S.A.**; the input rating for altitudes above 2000 ft.(610 M) must be reduced by 2 percent for each 1000 ft. (305 M) above sea level.

**In Canada,** the input rating must be derated by 5 percent for altitudes of 2000 ft. to 4500 ft. (610 to 1372 M) above sea level.

The Conversion Kit Rating Plate accounts for high altitude derate.

## INSTALL ORIFICES

Install main burner orifices. DO NOT use Teflon tape. Finger-tighten orifices at least one full turn to prevent cross-threading, then tighten with wrench. There are enough orifices in each kit for largest furnace. Discard extra orifices.

**NOTE**: DO NOT reinstall the manifold at this time.

**Table 8 – Orifice Size and Manifold Pressure (In. W.C.) for Gas Input Rate**
**(Tabulated Data Based on 22,000 Btuh High-Heat/14,500 Btuh for Low-Heat per Burner, Derated 4 Percent for Each 1000 Ft. (305 M) Above Sea Level)**

| ALTITUDE RANGE FT. (M) | | AVG. GAS HEAT VALUE (BTUH/CU FT.) | SPECIFIC GRAVITY OF NATURAL GAS | | | | | | | |
|---|---|---|---|---|---|---|---|---|---|---|
| | | | 0.58 | | 0.60 | | 0.62 | | 0.64 | |
| | | | Orifice No. | Manifold Pressure High/Low | Orifice No. | Manifold Pressure High/Low | Orifice No. | Manifold Pressure High/Low | Orifice No. | Manifold Pressure High/Low |
| USA | 0 to 2000 (0 to 610) | 900 | 42 | 3.5/1.5 | 42 | 3.6/1.6 | 42 | 3.7/1.6 | 41 | 3.5/1.5 |
| | | 925 | 42 | 3.3/1.4 | 42 | 3.4/1.5 | 42 | 3.5/1.5 | 42 | 3.7/1.6 |
| | | 950 | 43 | 3.8/1.7 | 42 | 3.3/1.4 | 42 | 3.4/1.5 | 42 | 3.5/1.5 |
| | | 975 | 43 | 3.6/1.6 | 43 | 3.8/1.6 | 42 | 3.2/1.4 | 42 | 3.3/1.4 |
| | | 1000 | 43 | 3.5/1.5 | 43 | 3.6/1.6 | 43 | 3.7/1.6 | 43 | 3.8/1.7 |
| | | 1025 | 43 | 3.3/1.4 | 43 | 3.4/1.5 | 43 | 3.5/1.5 | 43 | 3.6/1.6 |
| | | 1050 | 44 | 3.6/1.6 | 43 | 3.2/1.4 | 43 | 3.4/1.5 | 43 | 3.5/1.5 |
| | | 1075 | 44 | 3.4/1.5 | 44 | 3.5/1.5 | 43 | 3.2/1.4 | 43 | 3.3/1.4 |
| | | 1100 | 44 | 3.3/1.4 | 44 | 3.4/1.5 | 44 | 3.5/1.5 | 43 | 3.2/1.4 |
| ALTITUDE RANGE FT. (M) | | AVG. GAS HEAT VALUE (BTUH/CU FT.) | SPECIFIC GRAVITY OF NATURAL GAS | | | | | | | |
| | | | 0.58 | | 0.60 | | 0.62 | | 0.64 | |
| | | | Orifice No. | Manifold Pressure High/Low | Orifice No. | Manifold Pressure High/Low | Orifice No. | Manifold Pressure High/Low | Orifice No. | Manifold Pressure High/Low |
| USA | 2001 to 3000 (610 to 914) | 800 | 42 | 3.4/1.5 | 42 | 3.5/1.5 | 42 | 3.6/1.6 | 42 | 3.7/1.6 |
| | | 825 | 42 | 3.2/1.4 | 42 | 3.3/1.4 | 42 | 3.4/1.5 | 42 | 3.5/1.5 |
| | | 850 | 43 | 3.7/1.6 | 43 | 3.8/1.6 | 42 | 3.2/1.4 | 42 | 3.3/1.4 |
| | | 875 | 43 | 3.5/1.5 | 43 | 3.6/1.6 | 43 | 3.7/1.6 | 43 | 3.8/1.7 |
| | | 900 | 43 | 3.3/1.4 | 43 | 3.4/1.5 | 43 | 3.5/1.5 | 43 | 3.6/1.6 |
| | | 925 | 44 | 3.5/1.5 | 43 | 3.2/1.4 | 43 | 3.3/1.4 | 43 | 3.4/1.5 |
| | | 950 | 44 | 3.4/1.5 | 44 | 3.5/1.5 | 44 | 3.6/1.6 | 43 | 3.2/1.4 |
| | | 975 | 44 | 3.2/1.4 | 44 | 3.3/1.4 | 44 | 3.4/1.5 | 44 | 3.5/1.5 |
| | | 1000 | 45 | 3.7/1.6 | 45 | 3.8/1.7 | 44 | 3.2/1.4 | 44 | 3.4/1.5 |
| ALTITUDE RANGE FT. (M) | | AVG. GAS HEAT VALUE (BTUH/CU FT.) | SPECIFIC GRAVITY OF NATURAL GAS | | | | | | | |
| | | | 0.58 | | 0.60 | | 0.62 | | 0.64 | |
| | | | Orifice No. | Manifold Pressure High/Low | Orifice No. | Manifold Pressure High/Low | Orifice No. | Manifold Pressure High/Low | Orifice No. | Manifold Pressure High/Low |
| USA | 3001 to 4000 (914 to 1219) | 775 | 42 | 3.2/1.4 | 42 | 3.3/1.4 | 42 | 3.4/1.5 | 42 | 3.5/1.5 |
| | | 800 | 43 | 3.6/1.6 | 43 | 3.8/1.6 | 42 | 3.2/1.4 | 42 | 3.3/1.4 |
| | | 825 | 43 | 3.4/1.5 | 43 | 3.5/1.5 | 43 | 3.7/1.6 | 43 | 3.8/1.6 |
| | | 850 | 43 | 3.2/1.4 | 43 | 3.3/1.4 | 43 | 3.4/1.5 | 43 | 3.6/1.5 |
| | | 875 | 44 | 3.5/1.5 | 44 | 3.6/1.6 | 43 | 3.3/1.4 | 43 | 3.4/1.5 |
| | | 900 | 44 | 3.3/1.4 | 44 | 3.4/1.5 | 44 | 3.5/1.5 | 43 | 3.2/1.4 |
| | | 925 | 45 | 3.8/1.6 | 44 | 3.2/1.4 | 44 | 3.3/1.5 | 44 | 3.4/1.5 |
| | | 950 | 46 | 3.8/1.6 | 45 | 3.7/1.6 | 45 | 3.8/1.7 | 44 | 3.3/1.4 |
| ALTITUDE RANGE FT. (M) | | AVG. GAS HEAT VALUE (BTUH/CU FT.) | SPECIFIC GRAVITY OF NATURAL GAS | | | | | | | |
| | | AVG. GAS HEAT VALUE (BTUH/CU FT.) | 0.58 | | 0.60 | | 0.62 | | 0.64 | |
| | | | Orifice No. | Manifold Pressure High/Low | Orifice No. | Manifold Pressure High/Low | Orifice No. | Manifold Pressure High/Low | Orifice No. | Manifold Pressure High/Low |
| USA | 4001 to 5000 (1219 to 1524) | 750 | 43 | 3.6/1.6 | 43 | 3.8/1.6 | 42 | 3.2/1.4 | 42 | 3.3/1.4 |
| | | 775 | 43 | 3.4/1.5 | 43 | 3.5/1.5 | 43 | 3.6/1.6 | 43 | 3.8/1.6 |
| | | 800 | 43 | 3.2/1.4 | 43 | 3.3/1.4 | 43 | 3.4/1.5 | 43 | 3.5/1.5 |
| | | 825 | 44 | 3.4/1.5 | 44 | 3.6/1.5 | 43 | 3.2/1.4 | 43 | 3.3/1.4 |
| | | 850 | 44 | 3.2/1.4 | 44 | 3.4/1.5 | 44 | 3.5/1.5 | 44 | 3.6/1.6 |
| | | 875 | 45 | 3.7/1.6 | 45 | 3.8/1.7 | 44 | 3.3/1.4 | 44 | 3.4/1.5 |
| | | 900 | 46 | 3.7/1.6 | 46 | 3.8/1.7 | 45 | 3.7/1.6 | 44 | 3.2/1.4 |
| | | 925 | 46 | 3.5/1.5 | 46 | 3.6/1.6 | 46 | 3.7/1.6 | 46 | 3.8/1.7 |

* Orifice number 43 are factory installed

**Table 8 - Orifice Size and Manifold Pressure (In. W.C.) for Gas Input Rate (Con't.)**
**(Tabulated Data Based on 22,000 Btuh High-Heat/14,500 Btuh for Low-Heat per Burner, Derated 4 Percent for Each 1000 Ft. Above Sea Level)**

| ALTITUDE RANGE FT. (M) | | AVG. GAS HEAT VALUE AT ALTITUDE (BTUH/CU FT.) | SPECIFIC GRAVITY OF NATURAL GAS | | | | | | | |
|---|---|---|---|---|---|---|---|---|---|---|
| | | | 0.58 | | 0.60 | | 0.62 | | 0.64 | |
| | | | Orifice No. | Manifold Pressure High/Low | Orifice No. | Manifold Pressure High/Low | Orifice No. | Manifold Pressure High/Low | Orifice No. | Manifold Pressure High/Low |
| USA | 5001 to 6000 (1524 to 1829) | 725 | 43 | 3.4/1.5 | 43 | 3.5/1.5 | 43 | 3.6/1.6 | 43 | 3.7/1.6 |
| | | 750 | 43 | 3.2/1.4 | 43 | 3.3/1.4 | 43 | 3.4/1.5 | 43 | 3.5/1.5 |
| | | 775 | 44 | 3.4/1.5 | 44 | 3.5/1.5 | 43 | 3.2/1.4 | 43 | 3.3/1.4 |
| | | 800 | 44 | 3.2/1.4 | 44 | 3.3/1.4 | 44 | 3.4/1.5 | 44 | 3.5/1.5 |
| | | 825 | 46 | 3.8/1.7 | 45 | 3.8/1.6 | 44 | 3.2/1.4 | 44 | 3.3/1.4 |
| | | 850 | 46 | 3.6/1.6 | 46 | 3.7/1.6 | 46 | 3.8/1.7 | 45 | 3.8/1.6 |
| | | 875 | 47 | 3.8/1.7 | 46 | 3.5/1.5 | 46 | 3.6/1.6 | 46 | 3.7/1.6 |
| | | 900 | 47 | 3.6/1.6 | 47 | 3.8/1.6 | 46 | 3.4/1.5 | 46 | 3.5/1.5 |
| ALTITUDE RANGE | | AVG. GAS HEAT VALUE AT ALTITUDE (BTUH/CU FT.) | SPECIFIC GRAVITY OF NATURAL GAS | | | | | | | |
| | | | 0.58 | | 0.60 | | 0.62 | | 0.64 | |
| | | | Orifice No. | Manifold Pressure High/Low | Orifice No. | Manifold Pressure High/Low | Orifice No. | Manifold Pressure High/Low | Orifice No. | Manifold Pressure High/Low |
| USA | 6001 to 7000 (1829 to 2134) | 675 | 43 | 3.4/1.5 | 43 | 3.5/1.5 | 43 | 3.6/1.6 | 43 | 3.7/1.6 |
| | | 700 | 44 | 3.6/1.6 | 43 | 3.3/1.4 | 43 | 3.4/1.5 | 43 | 3.5/1.5 |
| | | 725 | 44 | 3.4/1.5 | 44 | 3.5/1.5 | 44 | 3.6/1.6 | 43 | 3.2/1.4 |
| | | 750 | 45 | 3.8/1.7 | 44 | 3.3/1.4 | 44 | 3.4/1.5 | 44 | 3.5/1.5 |
| | | 775 | 46 | 3.7/1.6 | 45 | 3.7/1.6 | 45 | 3.8/1.7 | 44 | 3.2/1.4 |
| | | 800 | 46 | 3.5/1.5 | 46 | 3.6/1.6 | 46 | 3.8/1.6 | 45 | 3.7/1.6 |
| | | 825 | 47 | 3.7/1.6 | 46 | 3.4/1.5 | 46 | 3.5/1.5 | 46 | 3.6/1.6 |
| | | 850 | 47 | 3.5/1.5 | 47 | 3.6/1.6 | 47 | 3.8/1.6 | 46 | 3.4/1.5 |
| ALTITUDE RANGE | | AVG. GAS HEAT VALUE AT ALTITUDE (BTUH/CU FT.) | SPECIFIC GRAVITY OF NATURAL GAS | | | | | | | |
| | | | 0.58 | | 0.60 | | 0.62 | | 0.64 | |
| | | | Orifice No. | Manifold Pressure High/Low | Orifice No. | Manifold Pressure High/Low | Orifice No. | Manifold Pressure High/Low | Orifice No. | Manifold Pressure High/Low |
| USA | 7001 to 8000 (2134 to 2438) | 650 | 44 | 3.6/1.6 | 43 | 3.2/1.4 | 43 | 3.4/1.5 | 43 | 3.5/1.5 |
| | | 675 | 44 | 3.3/1.5 | 44 | 3.5/1.5 | 44 | 3.6/1.6 | 43 | 3.2/1.4 |
| | | 700 | 45 | 3.8/1.6 | 44 | 3.2/1.4 | 44 | 3.3/1.4 | 44 | 3.4/1.5 |
| | | 725 | 46 | 3.7/1.6 | 46 | 3.8/1.7 | 45 | 3.7/1.6 | 44 | 3.2/1.4 |
| | | 750 | 46 | 3.4/1.5 | 46 | 3.6/1.5 | 46 | 3.7/1.6 | 46 | 3.8/1.6 |
| | | 775 | 47 | 3.6/1.6 | 47 | 3.8/1.6 | 46 | 3.4/1.5 | 46 | 3.6/1.5 |
| | | 800 | 47 | 3.4/1.5 | 47 | 3.5/1.5 | 47 | 3.7/1.6 | 47 | 3.8/1.6 |
| | | 825 | 48 | 3.7/1.6 | 48 | 3.8/1.6 | 47 | 3.4/1.5 | 47 | 3.6/1.5 |
| ALTITUDE RANGE | | AVG. GAS HEAT VALUE AT ALTITUDE (BTUH/CU FT.) | SPECIFIC GRAVITY OF NATURAL GAS | | | | | | | |
| | | | 0.58 | | 0.60 | | 0.62 | | 0.64 | |
| | | | Orifice No. | Manifold Pressure High/Low | Orifice No. | Manifold Pressure High/Low | Orifice No. | Manifold Pressure High/Low | Orifice No. | Manifold Pressure High/Low |
| USA | 8001 to 9000 (2438 to 2743) | 625 | 44 | 3.3/1.5 | 44 | 3.5/1.5 | 44 | 3.6/1.6 | 43 | 3.2/1.4 |
| | | 650 | 45 | 3.7/1.6 | 44 | 3.2/1.4 | 44 | 3.3/1.4 | 44 | 3.4/1.5 |
| | | 675 | 46 | 3.6/1.6 | 46 | 3.8/1.6 | 45 | 3.7/1.6 | 45 | 3.8/1.7 |
| | | 700 | 47 | 3.8/1.7 | 46 | 3.5/1.5 | 46 | 3.6/1.6 | 46 | 3.7/1.6 |
| | | 725 | 47 | 3.6/1.6 | 47 | 3.7/1.6 | 47 | 3.8/1.7 | 46 | 3.5/1.5 |
| | | 750 | 48 | 3.8/1.7 | 47 | 3.5/1.5 | 47 | 3.6/1.6 | 47 | 3.7/1.6 |
| | | 775 | 48 | 3.6/1.5 | 48 | 3.7/1.6 | 48 | 3.8/1.7 | 47 | 3.5/1.5 |
| USA | 9001 to 10,000 2743 to 3048) | 600 | 45 | 3.7/1.6 | 45 | 3.8/1.7 | 44 | 3.3/1.4 | 44 | 3.4/1.5 |
| | | 625 | 46 | 3.6/1.6 | 46 | 3.7/1.6 | 46 | 3.8/1.7 | 45 | 3.8/1.6 |
| | | 650 | 47 | 3.8/1.6 | 46 | 3.4/1.5 | 46 | 3.6/1.5 | 46 | 3.7/1.6 |
| | | 675 | 47 | 3.5/1.5 | 47 | 3.6/1.6 | 47 | 3.7/1.6 | 46 | 3.4/1.5 |
| | | 700 | 48 | 3.7/1.6 | 48 | 3.8/1.7 | 47 | 3.5/1.5 | 47 | 3.6/1.6 |
| | | 725 | 48 | 3.5/1.5 | 48 | 3.6/1.6 | 48 | 3.7/1.6 | 48 | 3.8/1.7 |

* Orifice number 43 are factory installed

**Table 9 – Orifice Size and Manifold Pressure (In. W.C.) for Gas Input Rate**
**(Tabulated Data Based on 21,000 Btuh High-Heat/14,500 Btuh for Low-Heat Per Burner, Derated 4 Percent for Each 1000 Ft. (305 M) Above Sea level)**

| ALTITUDE RANGE FT. (M) | | AVG. GAS HEAT VALUE (BTUH/CU FT.) | SPECIFIC GRAVITY OF NATURAL GAS | | | | | | | |
|---|---|---|---|---|---|---|---|---|---|---|
| | | | 0.58 | | 0.60 | | 0.62 | | 0.64 | |
| | | | Orifice No. | Manifold Pressure High/Low | Orifice No. | Manifold Pressure High/Low | Orifice No. | Manifold Pressure High/Low | Orifice No. | Manifold Pressure High/Low |
| USA | 0 to 2000 (0 to 610) | 900 | 42 | 3.2/1.5 | 42 | 3.3/1.6 | 42 | 3.4/1.6 | 42 | 3.5/1.7 |
| | | 925 | 43 | 3.7/1.8 | 43 | 3.8/1.8 | 42 | 3.2/1.5 | 42 | 3.3/1.6 |
| | | 950 | 43 | 3.5/1.7 | 43 | 3.6/1.7 | 43 | 3.7/1.8 | 43 | 3.8/1.8 |
| | | 975 | 43 | 3.3/1.6 | 43 | 3.4/1.6 | 43 | 3.5/1.7 | 43 | 3.7/1.7 |
| | | 1000 | 44 | 3.6/1.7 | 43 | 3.3/1.6 | 43 | 3.4/1.6 | 43 | 3.5/1.7 |
| | | 1025 | 44 | 3.4/1.6 | 44 | 3.6/1.7 | 43 | 3.2/1.5 | 43 | 3.3/1.6 |
| | | 1050 | 44 | 3.3/1.6 | 44 | 3.4/1.6 | 44 | 3.5/1.7 | 43 | 3.2/1.5 |
| | | 1075 | 45 | 3.8/1.8 | 44 | 3.2/1.5 | 44 | 3.3/1.6 | 44 | 3.4/1.6 |
| | | 1100 | 46 | 3.8/1.8 | 45 | 3.7/1.8 | 44 | 3.2/1.5 | 44 | 3.3/1.6 |
| ALTITUDE RANGE FT. (M) | | AVG. GAS HEAT VALUE (BTUH/CU FT.) | SPECIFIC GRAVITY OF NATURAL GAS | | | | | | | |
| | | | 0.58 | | 0.60 | | 0.62 | | 0.64 | |
| | | | Orifice No. | Manifold Pressure High/Low | Orifice No. | Manifold Pressure High/Low | Orifice No. | Manifold Pressure High/Low | Orifice No. | Manifold Pressure High/Low |
| USA | 2001 to 3000 (610 to 914) | 800 | 43 | 3.8/1.8 | 42 | 3.2/1.5 | 42 | 3.3/1.6 | 42 | 3.4/1.6 |
| | | 825 | 43 | 3.5/1.7 | 43 | 3.7/1.7 | 43 | 3.8/1.8 | 42 | 3.2/1.5 |
| | | 850 | 43 | 3.3/1.6 | 43 | 3.5/1.6 | 43 | 3.6/1.7 | 43 | 3.7/1.8 |
| | | 875 | 43 | 3.2/1.5 | 43 | 3.3/1.6 | 43 | 3.4/1.6 | 43 | 3.5/1.7 |
| | | 900 | 44 | 3.4/1.6 | 44 | 3.5/1.7 | 43 | 3.2/1.5 | 43 | 3.3/1.6 |
| | | 925 | 44 | 3.2/1.5 | 44 | 3.3/1.6 | 44 | 3.5/1.6 | 44 | 3.6/1.7 |
| | | 950 | 45 | 3.7/1.8 | 45 | 3.8/1.8 | 44 | 3.3/1.6 | 44 | 3.4/1.6 |
| | | 975 | 46 | 3.7/1.8 | 46 | 3.8/1.8 | 45 | 3.8/1.8 | 44 | 3.2/1.5 |
| | | 1000 | 46 | 3.5/1.7 | 46 | 3.6/1.7 | 46 | 3.8/1.8 | 45 | 3.7/1.8 |
| ALTITUDE RANGE FT. (M) | | AVG. GAS HEAT VALUE (BTUH/CU FT.) | SPECIFIC GRAVITY OF NATURAL GAS | | | | | | | |
| | | | 0.58 | | 0.60 | | 0.62 | | 0.64 | |
| | | | Orifice No. | Manifold Pressure High/Low | Orifice No. | Manifold Pressure High/Low | Orifice No. | Manifold Pressure High/Low | Orifice No. | Manifold Pressure High/Low |
| USA | 3001 to 4000 (914 to 1219) | 775 | 43 | 3.5/1.7 | 43 | 3.7/1.7 | 43 | 3.8/1.8 | 42 | 3.2/1.5 |
| | | 800 | 43 | 3.3/1.6 | 43 | 3.4/1.6 | 43 | 3.5/1.7 | 43 | 3.7/1.7 |
| | | 825 | 44 | 3.6/1.7 | 43 | 3.2/1.5 | 43 | 3.3/1.6 | 43 | 3.4/1.6 |
| | | 850 | 44 | 3.4/1.6 | 44 | 3.5/1.7 | 44 | 3.6/1.7 | 43 | 3.2/1.5 |
| | | 875 | 45 | 3.8/1.8 | 44 | 3.3/1.6 | 44 | 3.4/1.6 | 44 | 3.5/1.7 |
| | | 900 | 46 | 3.8/1.8 | 45 | 3.8/1.8 | 44 | 3.2/1.5 | 44 | 3.3/1.6 |
| | | 925 | 46 | 3.6/1.7 | 46 | 3.7/1.8 | 45 | 3.7/1.8 | 45 | 3.8/1.8 |
| | | 950 | 46 | 3.4/1.6 | 46 | 3.5/1.7 | 46 | 3.7/1.7 | 46 | 3.8/1.8 |
| ALTITUDE RANGE FT. (M) | | AVG. GAS HEAT VALUE (BTUH/CU FT.) | SPECIFIC GRAVITY OF NATURAL GAS | | | | | | | |
| | | | 0.58 | | 0.60 | | 0.62 | | 0.64 | |
| | | | Orifice No. | Manifold Pressure High/Low | Orifice No. | Manifold Pressure High/Low | Orifice No. | Manifold Pressure High/Low | Orifice No. | Manifold Pressure High/Low |
| USA | 4001 to 5000 (1219 to 1524) | 750 | 43 | 3.3/1.6 | 43 | 3.4/1.6 | 43 | 3.5/1.7 | 43 | 3.6/1.7 |
| | | 775 | 44 | 3.6/1.7 | 43 | 3.2/1.5 | 43 | 3.3/1.6 | 43 | 3.4/1.6 |
| | | 800 | 44 | 3.3/1.6 | 44 | 3.4/1.6 | 44 | 3.6/1.7 | 43 | 3.2/1.5 |
| | | 825 | 45 | 3.8/1.8 | 44 | 3.2/1.5 | 44 | 3.4/1.6 | 44 | 3.5/1.6 |
| | | 850 | 46 | 3.8/1.8 | 45 | 3.7/1.8 | 45 | 3.8/1.8 | 44 | 3.3/1.6 |
| | | 875 | 46 | 3.5/1.7 | 46 | 3.7/1.7 | 46 | 3.8/1.8 | 45 | 3.7/1.8 |
| | | 900 | 47 | 3.8/1.8 | 46 | 3.5/1.7 | 46 | 3.6/1.7 | 46 | 3.7/1.8 |
| | | 925 | 47 | 3.6/1.7 | 47 | 3.7/1.8 | 47 | 3.8/1.8 | 46 | 3.5/1.7 |

* Orifice number 43 are factory installed

**Table 9 - Orifice Size and Manifold Pressure (In. W.C.) for Gas Input Rate (Con't.)**
**(Tabulated Data Based on 21,000 Btuh High-Heat/14,500 Btuh for Low-Heat Per Burner, Derated 4 Percent for Each 1000 Ft. (305 M) Above Sea level)**

| ALTITUDE RANGE FT. (M) | | AVG. GAS HEAT VALUE AT ALTITUDE (BTUH/CU FT.) | SPECIFIC GRAVITY OF NATURAL GAS | | | | | | | |
|---|---|---|---|---|---|---|---|---|---|---|
| | | | 0.58 | | 0.60 | | 0.62 | | 0.64 | |
| | | | Orifice No. | Manifold Pressure High/Low | Orifice No. | Manifold Pressure High/Low | Orifice No. | Manifold Pressure High/Low | Orifice No. | Manifold Pressure High/Low |
| USA | 5001 to 6000 (1524 to 1829) | 725 | 44 | 3.5/1.7 | 43 | 3.2/1.5 | 43 | 3.3/1.6 | 43 | 3.4/1.6 |
| | | 750 | 44 | 3.3/1.6 | 44 | 3.4/1.6 | 44 | 3.5/1.7 | 43 | 3.2/1.5 |
| | | 775 | 45 | 3.7/1.8 | 44 | 3.2/1.5 | 44 | 3.3/1.6 | 44 | 3.4/1.6 |
| | | 800 | 46 | 3.7/1.8 | 46 | 3.8/1.8 | 45 | 3.8/1.8 | 44 | 3.2/1.5 |
| | | 825 | 46 | 3.5/1.7 | 46 | 3.6/1.7 | 46 | 3.7/1.8 | 46 | 3.8/1.8 |
| | | 850 | 47 | 3.7/1.8 | 47 | 3.8/1.8 | 46 | 3.5/1.7 | 46 | 3.6/1.7 |
| | | 875 | 47 | 3.5/1.7 | 47 | 3.6/1.7 | 47 | 3.7/1.8 | 46 | 3.4/1.6 |
| | | 900 | 48 | 3.8/1.8 | 47 | 3.4/1.6 | 47 | 3.5/1.7 | 47 | 3.7/1.7 |
| ALTITUDE RANGE FT. (M) | | AVG. GAS HEAT VALUE AT ALTITUDE (BTUH/CU FT.) | SPECIFIC GRAVITY OF NATURAL GAS | | | | | | | |
| | | | 0.58 | | 0.60 | | 0.62 | | 0.64 | |
| | | | Orifice No. | Manifold Pressure High/Low | Orifice No. | Manifold Pressure High/Low | Orifice No. | Manifold Pressure High/Low | Orifice No. | Manifold Pressure High/Low |
| USA | 6001 to 7000 (1829 to 2134) | 675 | 44 | 3.5/1.7 | 43 | 3.2/1.5 | 43 | 3.3/1.6 | 43 | 3.4/1.6 |
| | | 700 | 44 | 3.3/1.6 | 44 | 3.4/1.6 | 44 | 3.5/1.7 | 43 | 3.2/1.5 |
| | | 725 | 45 | 3.7/1.8 | 45 | 3.8/1.8 | 44 | 3.3/1.6 | 44 | 3.4/1.6 |
| | | 750 | 46 | 3.6/1.7 | 46 | 3.8/1.8 | 45 | 3.7/1.8 | 45 | 3.8/1.8 |
| | | 775 | 46 | 3.4/1.6 | 46 | 3.5/1.7 | 46 | 3.6/1.7 | 46 | 3.8/1.8 |
| | | 800 | 47 | 3.6/1.7 | 47 | 3.8/1.8 | 46 | 3.4/1.6 | 46 | 3.5/1.7 |
| | | 825 | 47 | 3.4/1.6 | 47 | 3.5/1.7 | 47 | 3.6/1.7 | 47 | 3.8/1.8 |
| | | 850 | 48 | 3.7/1.7 | 48 | 3.8/1.8 | 47 | 3.4/1.6 | 47 | 3.5/1.7 |
| ALTITUDE RANGE FT. (M) | | AVG. GAS HEAT VALUE AT ALTITUDE (BTUH/CU FT.) | SPECIFIC GRAVITY OF NATURAL GAS | | | | | | | |
| | | | 0.58 | | 0.60 | | 0.62 | | 0.64 | |
| | | | Orifice No. | Manifold Pressure High/Low | Orifice No. | Manifold Pressure High/Low | Orifice No. | Manifold Pressure High/Low | Orifice No. | Manifold Pressure High/Low |
| USA | 7001 to 8000 (2134 to 2438) | 650 | 44 | 3.3/1.6 | 44 | 3.4/1.6 | 44 | 3.5/1.7 | 43 | 3.2/1.5 |
| | | 675 | 45 | 3.7/1.8 | 45 | 3.8/1.8 | 44 | 3.3/1.6 | 44 | 3.4/1.6 |
| | | 700 | 46 | 3.6/1.7 | 46 | 3.7/1.8 | 46 | 3.8/1.8 | 45 | 3.8/1.8 |
| | | 725 | 47 | 3.8/1.8 | 46 | 3.5/1.7 | 46 | 3.6/1.7 | 46 | 3.7/1.8 |
| | | 750 | 47 | 3.5/1.7 | 47 | 3.7/1.8 | 47 | 3.8/1.8 | 46 | 3.5/1.6 |
| | | 775 | 48 | 3.8/1.8 | 47 | 3.4/1.6 | 47 | 3.6/1.7 | 47 | 3.7/1.7 |
| | | 800 | 48 | 3.6/1.7 | 48 | 3.7/1.8 | 48 | 3.8/1.8 | 47 | 3.4/1.6 |
| | | 825 | 48 | 3.3/1.6 | 48 | 3.5/1.6 | 48 | 3.6/1.7 | 48 | 3.7/1.8 |
| ALTITUDE RANGE FT. (M) | | AVG. GAS HEAT VALUE AT ALTITUDE (BTUH/CU FT.) | SPECIFIC GRAVITY OF NATURAL GAS | | | | | | | |
| | | | 0.58 | | 0.60 | | 0.62 | | 0.64 | |
| | | | Orifice No. | Manifold Pressure High/Low | Orifice No. | Manifold Pressure High/Low | Orifice No. | Manifold Pressure High/Low | Orifice No. | Manifold Pressure High/Low |
| USA | 8001 to 9000 (2438 to 2743) | 625 | 45 | 3.7/1.8 | 45 | 3.8/1.8 | 44 | 3.3/1.6 | 44 | 3.4/1.6 |
| | | 650 | 46 | 3.6/1.7 | 46 | 3.7/1.8 | 46 | 3.8/1.8 | 45 | 3.8/1.8 |
| | | 675 | 47 | 3.8/1.8 | 46 | 3.4/1.6 | 46 | 3.5/1.7 | 46 | 3.7/1.7 |
| | | 700 | 47 | 3.5/1.7 | 47 | 3.6/1.7 | 47 | 3.7/1.8 | 46 | 3.4/1.6 |
| | | 725 | 48 | 3.7/1.8 | 48 | 3.8/1.8 | 47 | 3.5/1.7 | 47 | 3.6/1.7 |
| | | 750 | 48 | 3.5/1.7 | 48 | 3.6/1.7 | 48 | 3.7/1.8 | 48 | 3.8/1.8 |
| | | 775 | 49 | 3.8/1.8 | 48 | 3.4/1.6 | 48 | 3.5/1.7 | 48 | 3.6/1.7 |
| USA | 9001 to 10,000 (2743 to 3048) | 600 | 46 | 3.6/1.7 | 46 | 3.7/1.8 | 46 | 3.8/1.8 | 45 | 3.7/1.8 |
| | | 625 | 47 | 3.7/1.8 | 47 | 3.8/1.8 | 46 | 3.5/1.7 | 46 | 3.6/1.7 |
| | | 650 | 47 | 3.4/1.6 | 47 | 3.6/1.7 | 47 | 3.7/1.8 | 47 | 3.8/1.8 |
| | | 675 | 48 | 3.6/1.7 | 48 | 3.8/1.8 | 47 | 3.4/1.6 | 47 | 3.5/1.7 |
| | | 700 | 48 | 3.4/1.6 | 48 | 3.5/1.7 | 48 | 3.6/1.7 | 48 | 3.7/1.8 |
| | | 725 | 49 | 3.7/1.8 | 49 | 3.8/1.8 | 48 | 3.4/1.6 | 48 | 3.5/1.7 |

* Orifice number 43 are factory installed

## REMOVE MIXER SCREWS

Each burner contains a mixer screw that must be removed. Refer to Fig. 37 for the mixer screw location.

1. Remove the mixer screws from the burners.

**NOTE**: It is not necessary to plug the hole in the burner when the mixer screws are removed.

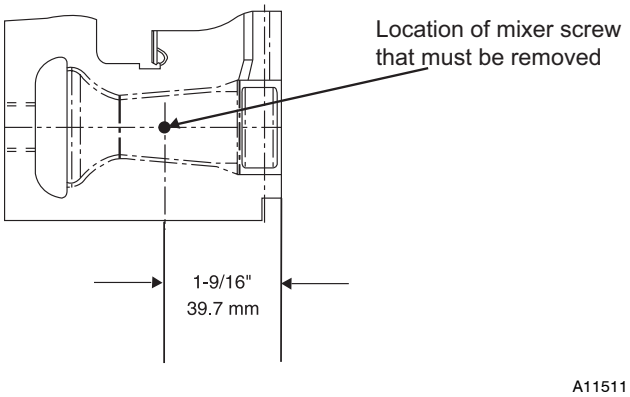


**Fig. 37 - Mixer Screw Location**

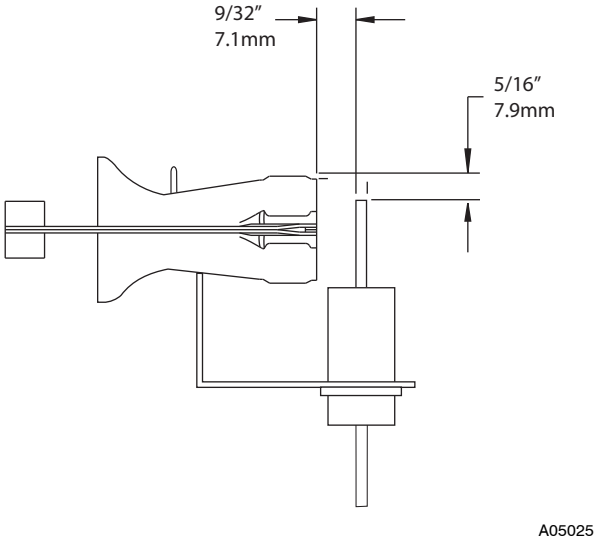


**Fig. 38 - Igniter Position - Side View**

## REINSTALL BURNER ASSEMBLY

To reinstall burner assembly:

1. Attach flame sensor to burner assembly.
2. Install HSI and bracket to burner assembly.
3. Insert one-piece burner in slot on sides of burner box and slide burner back in place.
4. Reattach HSI wires to HSI.
5. Verify igniter to burner alignment.
6. For Silicon Nitride igniters, see Fig. 38 and 39.
7. For Silicon Carbide igniters, see Fig. 40.
8. Re-attach Flame Sensor wire to Flame Sensor.

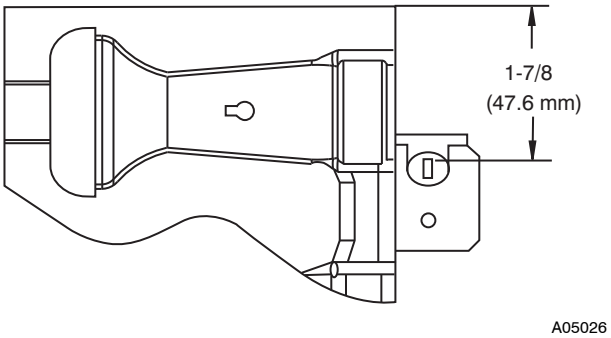


**Fig. 39 - Igniter Position - Top View**

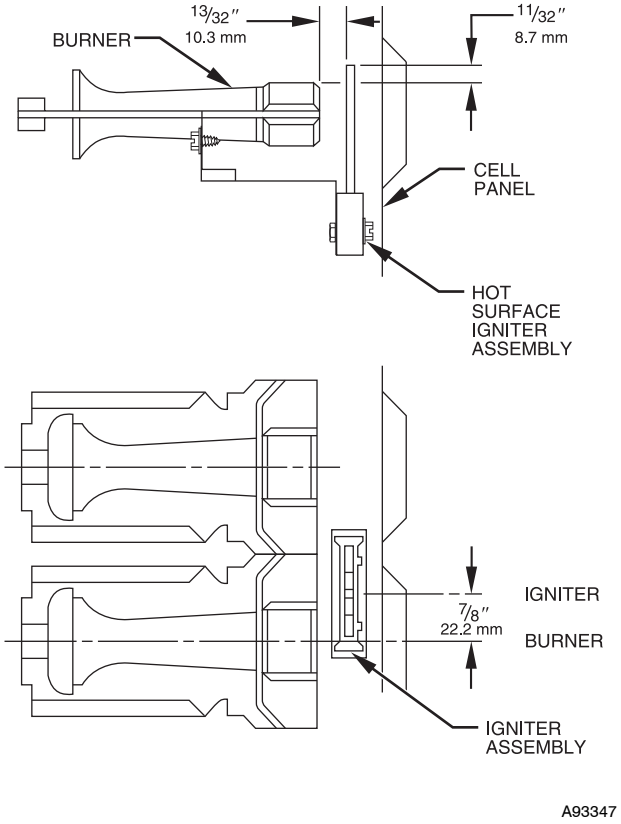


**Fig. 40 - Silicon Carbide Igniters**

## CONVERT GAS VALVE

**⚠ CAUTION**

**UNIT DAMAGE HAZARD**

Failure to follow this caution may result in unit damage

The G or J gas valve must be converted and pre-adjusted before operating on natural gas. The E valves must be pre-adjusted before operating on natural gas. If left this way, sooting and corrosion will occur leading to early heat exchanger failure.

## ⚠ WARNING

**FIRE, EXPLOSION, ELECTRICAL SHOCK HAZARD**

Failure to follow this warning could result in personal injury, death or property damage.

Gas supply MUST be shut off before disconnecting electrical power and proceeding with conversion.

## ⚠ WARNING

**ELECTRICAL SHOCK, FIRE OR EXPLOSION HAZARD**

Failure to follow this warning could result in personal injury, death or property damage.

Before installing, modifying, or servicing system, main electrical disconnect switch must be in the OFF position and install a lockout tag. There may be more than one disconnect switch. Lock out and tag switch with a suitable warning label. Verify proper operation after servicing.

**NOTE**: For the 2-stage furnaces with a Series J and Series G gas valve (see Fig. 41), **they MUST have both regulator springs replaced and the gas valve MUST be pre-adjusted.**
For older model 2-stage furnaces with a Series E gas valve (see Fig. 42), they DO NOT need to have the regulator springs replaced in the gas valve, but the regulators in the gas valve must be pre-adjusted for natural applications.

**For J and G valves See Fig 41.**

1. Be sure main gas and electrical supplies are turned OFF.
2. Remove both regulator seal caps. (See Fig. 41.)
3. Remove both regulator adjustment screws.
4. Remove both Propane gas regulator springs (white).
5. Install natural gas regulator springs (silver).
6. Install regulator adjustment screws.
7. Turn low-heat stage adjusting screw clockwise (inwards) 9.5 turns. This will increase the manifold pressure closer to the low-heat set point.
8. Turn high-heat stage adjusting screw clockwise (inwards) 12 turns. This will increase the manifold pressure closer to the high-heat set point.
9. DO NOT install regulator seal caps at this time.

**For E valves see Fig 42.**

1. Be sure gas and electrical supplies to furnace are off.
2. Remove caps that conceal adjustment screws for high- and low-heat stage gas valve regulators. (See Fig. 42.)
3. Turn low-heat stage adjusting screw (3/32-in. [2 mm] hex Allen screw) counter clockwise (outwards) 1 full turn. This will decrease the manifold pressure closer to the natural low-heat set point.
4. Turn high-heat stage adjusting screw (3/32-in. [2 mm] hex Allen screw) counter clockwise (outwards) 2 full turns. This will decrease the manifold pressure closer to the natural high-heat set point.
5. DO NOT install regulator seal caps at this time.

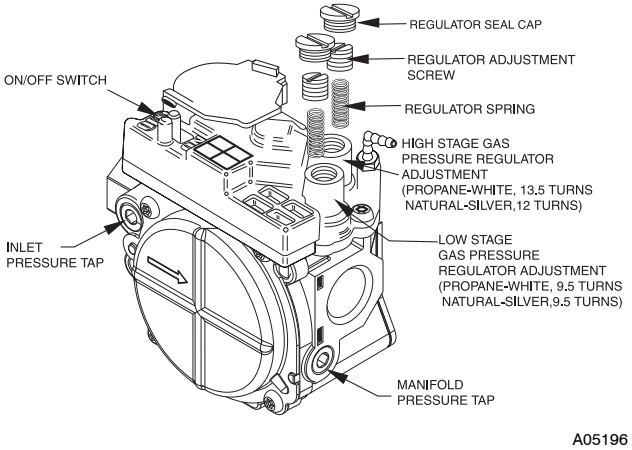


**Fig. 41 - 2-Stage J or G Valve**

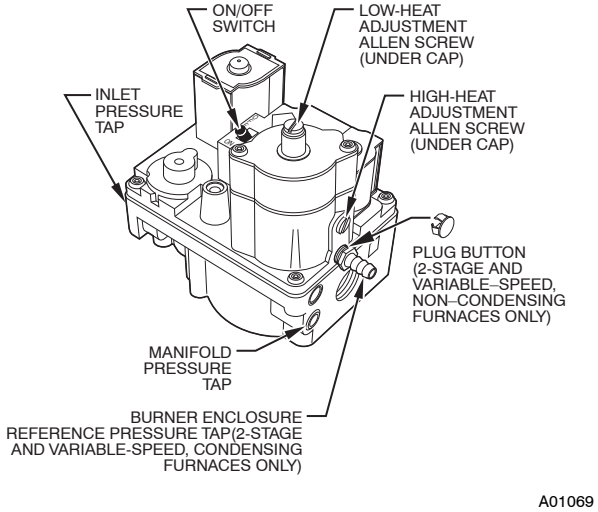


**Fig. 42 - 2-Stage E Valve**

### REMOVE LOW GAS PRESSURE SWITCH

## ⚠ WARNING

**FIRE, EXPLOSION, ELECTRICAL SHOCK HAZARD**

Failure to follow this warning could result in personal injury, death or property damage.

Gas supply MUST be shut off before disconnecting electrical power and proceeding with conversion.

## ⚠ WARNING

**ELECTRICAL SHOCK, FIRE OR EXPLOSION HAZARD**

Failure to follow this warning could result in personal injury, death or property damage.

Before installing, modifying, or servicing system, main electrical disconnect switch must be in the OFF position and install a lockout tag. There may be more than one disconnect switch. Lock out and tag switch with a suitable warning label. Verify proper operation after servicing.

1. Be sure main gas and electric supplies to furnace are off.
2. Remove low-gas pressure switch, brass street 90° elbow and 2-in. brass nipple from the gas valve inlet pressure tap. (See Fig. 41.)

**NOTE**: Use pipe dope approved for use with Propane gas. DO NOT use Teflon tape.

3. Apply pipe dope sparingly to the 1/8-in. NPT pipe plug (provided in kit) and install in the 1/8-in. tapped inlet pressure tap opening in the gas valve. DO NOT over-tighten. Check for gas leaks after gas supply has been turned on.

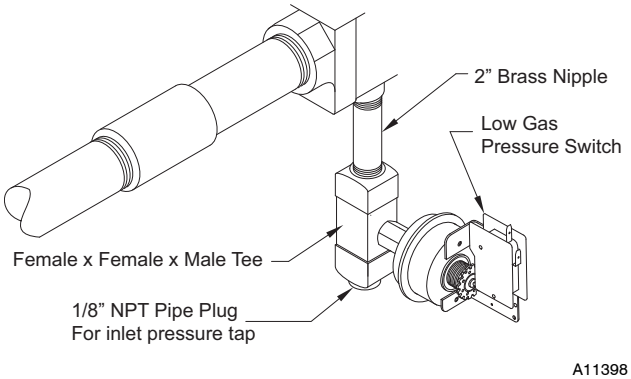


**Fig. 43 - 80% Low Gas Pressure Switch**

## ⚠ WARNING

**FIRE AND EXPLOSION HAZARD**

Failure to follow this warning could result in personal injury and/or death.

NEVER test for gas leaks with an open flame. Use a commercially available soap solution made specifically for the detection of leaks to check all connections. A fire or explosion may result causing property damage, personal injury or loss of life.

## ⚠ AVERTISSEMENT

**RISQUE D'EXPLOSION ET D'INCENDIE**

Le fait de ne pas suivre cet avertissement pourrait entraîner des dommages corporels et / ou la mort.

Ne jamais examiner pour les fuites de gaz avec une flamme vive. Utilisez plutôt un savon fait specifiquement pour la détection des fuites de gaz pour verifier tous les connections. Un incendie ou une explosion peut entrainer des dommages matériels, des blessures ou la mort.

## INSTALL MANIFOLD

1. Align the orifices in the manifold assembly with the support rings on the end of the burner.
2. Insert the orifices in the support rings of the burners. Manifold mounting tabs should fit flush against the burner box.

**NOTE**: If manifold does not fit flush against the burner box, the burners are not fully seated forward. Remove the manifold and check burner positioning in the burner box assembly.

3. Attach the green/yellow wire and ground terminal to one of the manifold mounting screws.
4. Install the remaining manifold mounting screws.
5. Connect the wires to both rollout switches.
6. Connect the wires to the flame sensor and hot surface igniter.
7. Connect the connector harness to gas valve.
8. Rewire unit low pressure switch (LPS) as follows:
   a. Trace one of the orange wires previously disconnected from the LGPS back to the NO terminals of the LPS.
   b. Trace the other orange wire previously disconnected from the LGPS back to its splice connection with the yellow wire of the furnace wire harness. Disconnect and discard this orange wire and the splice connection.
   c. Connect the yellow wire of the furnace wire harness (see "b" above) to the NO terminal of the LPS.
   d. Refer to the furnace wiring diagram ensure proper location of wires.

**NOTE**: Use only Propane-resistant pipe dope. DO NOT use Teflon tape.

9. Insert the gas pipe through the grommet in the casing. Apply a thin layer of pipe dope to the threads of the pipe and thread the pipe into the gas valve.

**NOTE**: Use a back-up wrench on the gas valve to prevent the valve from rotating on the manifold or damaging the mounting to the burner box.

10. With a back-up wrench on the inlet boss of the gas valve, finish tightening the gas pipe to the gas valve.
11. Turn gas on at electric switch on gas valve.

## CHECK INLET GAS PRESSURE

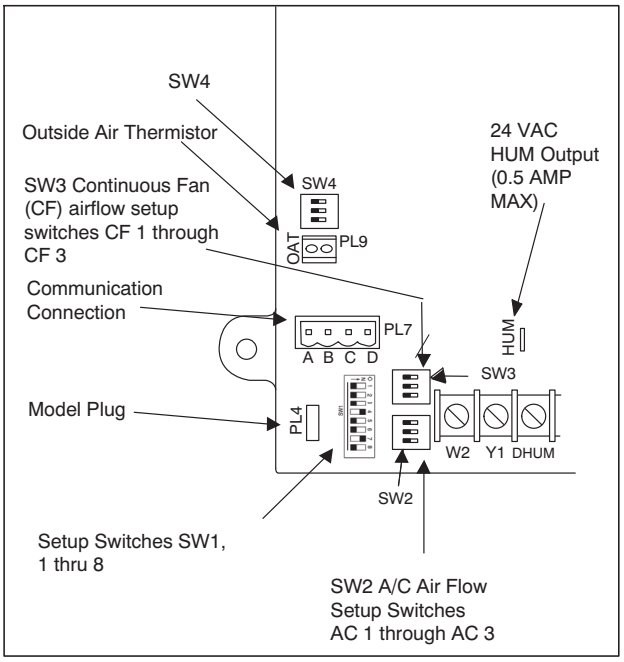


**Fig. 44 - Furnace Control**

## ⚠ CAUTION

**UNIT DAMAGE HAZARD**

Failure to follow this caution may result in unit damage.

DO NOT operate furnace more than one minute to check inlet gas pressure, as conversion is not complete at this time.

**NOTE**: This kit is to be used only when inlet gas pressure is between 4.5-in. W.C. and 13.6-in. W.C.

1. Verify manometer is connected to inlet pressure tap on gas valve.
2. Turn on furnace power supply.
3. Turn gas supply manual shutoff valve to ON position.
4. Turn furnace gas valve switch to ON position.
5. Turn Setup Switch SW1-2 on furnace control ON (see Fig. 44).
6. Jumper R-W/W1 and R-W2 thermostat connections on control.
7. When main burners ignite, confirm inlet gas pressure is between 4.5-in. W.C. and 13.6-in. W.C.
8. Remove jumper across R-W/W1 and R-W2 thermostat connections to terminate call for heat.
9. Turn furnace gas valve switch to OFF position.
10. Turn gas supply manual shutoff valve to OFF position.
11. Turn off furnace power supply.
12. Remove manometer.
13. Apply pipe dope sparingly to the 1/8-in. NPT pipe plug and install in the 1/8-in. tapped inlet-pressure tap opening in the gas valve. DO NOT over-tighten. Check for gas leaks after gas supply has been turned on.

## CHECK FURNACE AND MAKE ADJUSTMENTS

**⚠ WARNING**

**FIRE AND EXPLOSION HAZARD**

Failure to follow this warning could result in personal injury and/or death.

NEVER test for gas leaks with an open flame. Use a commercially available soap solution made specifically for the detection of leaks to check all connections. A fire or explosion may result causing property damage, personal injury or loss of life.

**⚠ AVERTISSEMENT**

**RISQUE D'EXPLOSION ET D'INCENDIE**

Le fait de ne pas suivre cet avertissement pourrait entraîner des dommages corporels et / ou la mort.

Ne jamais examiner pour les fuites de gaz avec une flamme vive. Utilisez plutôt un savon fait specifiquement pour la détection des fuites de gaz pour verifier tous les connections. Un incendie ou une explosion peut entrainer des dommages matériels, des blessures ou la mort.

**⚠ WARNING**

**FIRE, EXPLOSION, ELECTRICAL SHOCK HAZARD**

Failure to follow this warning could result in personal injury, death or property damage.

Gas supply MUST be shut off before disconnecting electrical power and proceeding with conversion.

**⚠ WARNING**

**ELECTRICAL SHOCK, FIRE OR EXPLOSION HAZARD**

Failure to follow this warning could result in personal injury, death or property damage.

Before installing, modifying, or servicing system, main electrical disconnect switch must be in the OFF position and install a lockout tag. There may be more than one disconnect switch. Lock out and tag switch with a suitable warning label. Verify proper operation after servicing.

1. Be sure main gas and electric supplies to furnace are off.
2. Remove 1/8-in. NPT pipe plug from manifold pressure tap on downstream side of gas valve.
3. Attach manometer to manifold pressure tap on gas valve.
4. Turn gas supply manual shutoff valve to ON position.
5. Turn furnace gas valve switch to ON position.
6. Check all threaded pipe connections for gas leaks.
7. Turn on furnace power supply.

## GAS INPUT RATE INFORMATION

See furnace rating plate for input rate. The input rate for natural gas is determined by manifold pressure and orifice size.

Determine natural gas orifice size and manifold pressures for correct input at installed altitude by using Table 7 or 8.

**NOTE**: All models in all positions except Low NOx models in downflow and horizontal positions use Table 7 (22,000 Btuh per burner). Low NOx models in downflow or horizontal positions must use Table 8 (21,000 Btuh per burner). See input listed on rating plate.

1. Obtain yearly heat-value average (at installed altitude) for local gas supply.
2. Obtain yearly specific-gravity average for local gas supply.
3. Find installation altitude in Table 7 or 8.

**NOTE**: For Canada altitudes of 2000 to 4500 ft. (610 to 1372 M), use U.S.A. Altitudes of 2001 to 3000 ft. (610 to 914 M) in Table 7 or 8.

4. Find closest natural gas heat value and specific gravity in Table 7 or 8.
5. Follow heat-value line and specific-gravity line to point of intersection to find orifice size and high and low manifold pressure settings.

Furnace gas input rate on rating plate is for installations at altitudes up to 2000 ft. (610 M).

**In the U.S.A.**, the input rating for altitudes above 2000 ft. (610 M) must be reduced by 4 percent for each 1000 ft. (305 M) above sea level.

**In Canada**, the input rating must be derated by 5 percent for altitudes of 2000 ft. (610 M) to 4500 ft. (1372 M) above sea level.

The Conversion Kit Rating Plate accounts for high altitude derate.

## SET GAS INPUT RATE

1. Make sure the gas supply is turned off to the furnace and at the electric switch on the gas valve.
2. Remove the 1/8 inch NPT plug from the outlet pressure tap on the gas valve.
3. Connect a manometer to the outlet pressure tap on gas valve.

4. Turn on furnace power supply.
5. Turn gas supply manual shutoff valve to ON position.
6. Turn furnace gas valve switch to ON position.
7. Verify SW1-2 on furnace control is turned “ON”. See Fig. 44.
8. Jumper R and W/W1 thermostat connections to call for heat.
9. Check manifold orifices for gas leaks when main burners ignite.
10. Adjust gas manifold pressure. (Refer to Table 7 or 8.)
11. Remove caps that conceal adjustment screws for gas valve regulators. (See Fig. 41.)
12. Adjust low-heat manifold pressure for natural gas. (See Fig. 41.)
13. Turn low-heat adjusting screw counterclockwise (out) to decrease input rate or clockwise (in) to increase input rate.

**NOTE**: When correct input is obtained, main burner flame should be clear blue, almost transparent (see Fig. 45).

14. Jumper R, W/W1 and W2 on control center thermostat connections. This keeps furnace locked in high-heat operation.
15. Adjust high-heat manifold pressure for natural gas.
16. Turn high-heat adjusting screw counterclockwise (out) to decrease input rate or clockwise (in) to increase input rate.
17. Replace caps that conceal the gas valve regulator adjustment screws.

**NOTE**: When correct input is obtained, main burner flame should be clear blue, almost transparent. (See Fig. 45).

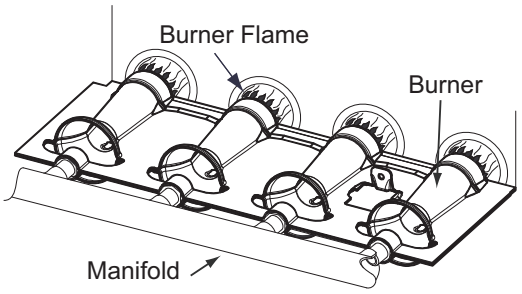


**Fig. 45 - Burner Flame**

18. Remove jumper across R, W1, and W2 after high-heat adjustment to terminate call for heat.
19. Turn setup switch SW1-2 on furnace control to OFF position.
20. Turn furnace gas valve switch to OFF position.
21. Turn off furnace power supply.
22. Remove manometer and re-install manifold pressure tap plug.
23. Turn furnace gas valve switch to ON position.
24. Turn on furnace power supply.
25. Set room thermostat to call for heat.
26. Check pressure tap plug for gas leaks when main burners ignite.
27. Check for correct burner flame.
28. After making the required manifold pressure adjustments, check and adjust the furnace temperature rise per the furnace installation instructions.

## LABEL APPLICATION

1. Fill in Conversion Responsibility Label 340071-205 and apply to Blower Access Door of furnace as shown. Date, name, and address of organization making this conversion are required. See Fig. 46.
2. Attach Conversion Rating Plate Label 340071-204 to outer door of furnace. See Fig. 47.
3. Apply Gas Control Conversion Label: For 2-stage J and G gas valves, use Gas Control Conversion Label 340071-202. (DO NOT use 340071-203, which is similar.) For 2-stage E gas valve, use Gas Control Adjustment Label 340071-203. (DO NOT use 340071-202, which is similar.)
4. Replace control access door, blower access door and outer door of furnace.

## CHECKOUT

1. Observe unit operation through 2 complete heating cycles.
2. See Sequence of Operation in furnace Installation, Start-Up, and Operating Instructions.
3. Set room thermostat to desired temperature.

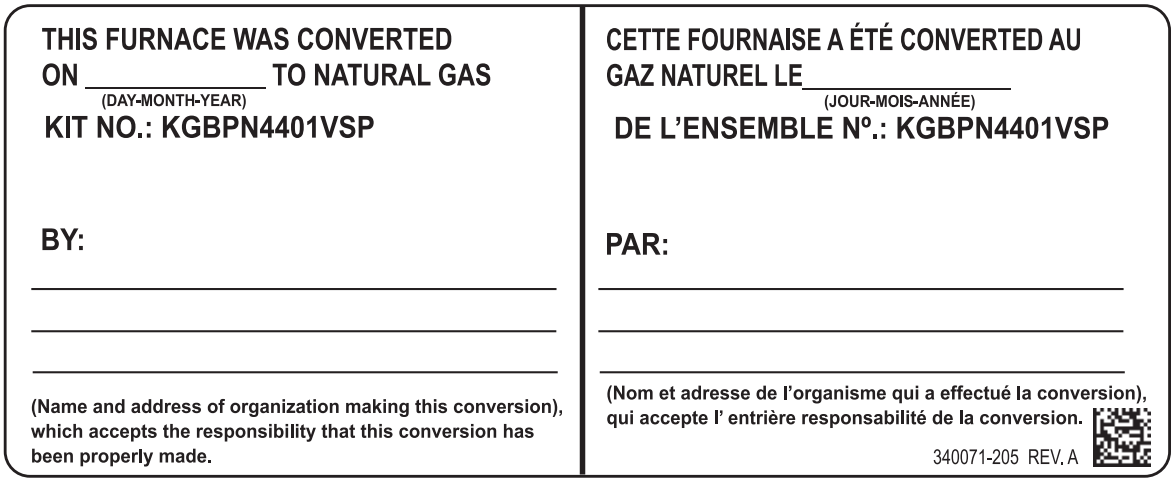


**Fig. 46 - Conversion Responsibility Label**

## CONVERSION KIT RATING PLATE - CARRIER CORPORATION

**THIS APPLIANCE HAS BEEN CONVERTED TO USE NATURAL GAS FOR FUEL. REFER TO KIT INSTRUCTIONS FOR CONVERSION PROCEDURES. USE PARTS SUPPLIED BY CARRIER CORPORATION AND INSTALLED BY QUALIFIED PERSONNEL. SEE EXISTING RATING PLATE FOR APPLIANCE MODEL NO. AND INPUT RATING.**

NOTE: Furnace gas input rate on rating plate is for installations up to 2000 ft. (610m) above sea level. In U.S.A. the input rating for altitudes above 2000 ft. (610m) must be derated by 4% for each 1000 ft. (305m) above sea level. In Canada the input rating must be derated (per chart below) for altitudes of 2000 ft. (610m) to 4500 ft. (1372m) above sea level.

KIT NO.: KGBPN4401VSP (SUPERSEDES: KGAPN3501ALL, KGAPN3401ALL, KGAPN1601ALL, KGAPN21012SP, KGAPN2201ALL, KGAPN3301ALL, KGAPN3901ALL, KGAPN4401VSP)

FUEL USED: NATURAL GAS

| APPLIANCE MODELS | USA % DERATE PER 1000 FT. | CANADA % DERATE FOR 2000-4500 FT. |
|---|---|---|
| 58CTW, 58CVA, 58CVX, 314AAV, 315AAV, 315JAV, PG8JVA,PG8MVA | 4% | 10% |

| NATURAL GAS PRESSURE | | | IN. W.C. (PO C.E.) | PA |
|---|---|---|---|---|
| Max. Inlet Gas Pressure (Press. Max. D'Admission De Gaz) | | | 13.6 | 3,386 |
| Min. Inlet Gas Pressure (Press. Min. D'Admission De Gaz) | | | 4.5 | 1,121 |
| (For Purpose of Input Adjustment) (Pour L'Adjustment D'Entree) | | | | |
| | ALTITUDE | | | |
| Manifold Pressure | 0-2,000 ft. (0 - 610 m) | High Heat | 3.2 - 3.8 | 797 - 946 |
| | | Low Heat | 1.4 - 1.8 | 349 - 448 |
| Pression Tubulure | 2,000 - 10,000 ft. (610 - 3050 m) | Refer to Installation Manual Respecter les Instruction D'Installation | | |

340071-204 REV. A

A13202

**Fig. 47 - Conversion Rating Plate Label**

This control has been converted for use with natural gas.
Cette commande a été réglée pour emploi avec le gaz naturel.
340071-202 REV. A

A13207

**Fig. 48 - Gas Control Conversion Label**

This control has been adjusted for use with natural gas.
Ce coontrôle a été réglée pour fonctionner au gaz naturel.
340071-203 REV. A

A13208

**Fig. 49 - Gas Control Adjustment Label**

Copyright 2013 CAC / BDP ● 7310 W. Morris St. ● Indianapolis, IN 46231